DAIKIN

SiUS12-928_B

Service Manual

SUPER MULTi NX

G-Series / J-Series

[Applied Models]

- Inverter Multi : Heat Pump

SUPER MULTI NX G-Series / J-Series Service Manual

●Heat Pump
Indoor Unit

CTXS07JVJU	CTXS07LVJU	FDXS09DVJU
CTXS09HVJU	FTXS09LVJU	FDXS12DVJU
CTXS12HVJU	FTXS12LVJU	FDXS09LVJU
FTXS15HVJU	FTXS15LVJU	FDXS12LVJU
FTXS18HVJU	FTXS18LVJU	CDXS15LVJU
		CDXS18LVJU

Outdoor Unit

2MXS18GVJU
3MXS24JVJU
4MXS32GVJU

1. Safety Considerations vii
1.1 Safety Considerations for Repair vii
1.2 Safety Considerations for Users viii

Part 1

List of Functions 1

1. Functions 2

Part 2

Specifications 7

1. Indoor Unit 8
2. Outdoor Unit 13

Part 3

Printed Circuit Board

Connector Wiring Diagram 16

1. Indoor Unit 17
1.1 CTXS07JVJU, CTXS09/12HVJU, FTXS15/18HVJU 17
1.2 CTXS07LVJU, FTXS09/12LVJU 19
1.3 FTXS15/18LVJU 22
1.4 FDXS09/12DVJU 25
1.5 FDXS09/12LVJU, CDXS15/18LVJU 27
2. Outdoor Unit 29
2.1 2MXS18GVJU 29
2.2 3MXS24JVJU, 4MXS32GVJU 32

Part 4

Function and Control 34

1. Main Functions 35
1.1 Temperature Control 35
1.2 Frequency Principle 35
1.3 Airflow Direction Control (CTXS/FTXS Series) 37
1.4 Fan Speed Control for Indoor Unit 39
1.5 Program Dry Operation 40
1.6 Automatic Operation 41
1.7 Thermostat Control 42
1.8 NIGHT SET Mode 44
1.9 ECONO Operation 45
1.10 HOME LEAVE Operation 46
1.11 INTELLIGENT EYE Operation (CTXS/FTXS Series) 47
1.12 Inverter POWERFUL Operation 48
1.13 Other Functions 49
2. Function of Thermistor 51
3. Control Specification 54
3.1 Mode Hierarchy 54
3.2 Frequency Control 55
3.3 Controls at Mode Changing / Start-up 57
3.4 Discharge Pipe Temperature Control 58
3.5 Input Current Control 59
3.6 Freeze-up Protection Control 59
3.7 Heating Peak-cut Control 60
3.8 Outdoor Fan Control 61
3.9 Liquid Compression Protection Function 61
3.10 Defrost Control 62
3.11 Low Hz High Pressure Limit 63
3.12 Outdoor Electronic Expansion Valve Control 63
3.13 Malfunctions 68

Part 5

Operation Manual 70

1. System Configuration 71
2. CTXS-J, CTXS-H, FTXS-H Series 72

2.1 Remote Controller 72
2.2 AUTO · DRY · COOL · HEAT · FAN Operation 74
2.3 Adjusting the Airflow Direction 76
2.4 INTELLIGENT EYE Operation 78
2.5 POWERFUL Operation 80
2.6 OUTDOOR UNIT QUIET Operation 81
2.7 HOME LEAVE Operation 82
2.8 TIMER Operation 84
2.9 Note for Multi System 86
3. CTXS-L, FTXS-L Series 88
3.1 Remote Controller 88
3.2 AUTO · DRY · COOL · HEAT · FAN Operation 90
3.3 Adjusting the Airflow Direction and Rate 92
3.4 COMFORT AIRFLOW / INTELLIGENT EYE Operation 95
3.5 POWERFUL Operation 97
3.6 OUTDOOR UNIT QUIET Operation 98
3.7 ECONO Operation 99
3.8 OFF TIMER Operation 100
3.9 ON TIMER Operation 101
3.10 WEEKLY TIMER Operation 102
3.11 Note for Multi System 108
3.12 Quick Reference 110
4. FDXS-D Series 111
4.1 Remote Controller 111
4.2 AUTO · DRY · COOL · HEAT · FAN Operation 112
4.3 POWERFUL Operation 114
4.4 OUTDOOR UNIT QUIET Operation 115
4.5 HOME LEAVE Operation 116
4.6 TIMER Operation 118
5. CDXS-L, FDXS-L Series 120
5.1 Remote Controller 120
5.2 AUTO · DRY · COOL · HEAT · FAN Operation 122
5.3 Adjusting the Airflow Rate 124
5.4 POWERFUL Operation 125
5.5 OUTDOOR UNIT QUIET Operation 126
5.6 ECONO Operation 127
5.7 OFF TIMER Operation 128
5.8 ON TIMER Operation 129
5.9 Note for Multi System 130
5.10 Quick Reference 132

Part 6

Service Diagnosis 133

1. Troubleshooting with LED 135
1.1 Indoor Unit 135
1.2 Outdoor Unit 136
2. Problem Symptoms and Measures 137

3. Service Check Function 138
3.1 ARC452 Series Remote Controller 138
3.2 ARC433 Series Remote Controller 141
4. Code Indication on Remote Controller 144
4.1 Indoor Unit 144
4.2 Outdoor Unit 145
5. Troubleshooting for Indoor Unit 146
5.1 Indoor Unit PCB Abnormality 146
5.2 Freeze-up Protection Control or Heating Peak-cut Control 148
5.3 Fan Motor or Related Abnormality 150
5.4 Thermistor or Related Abnormality (Indoor Unit) 153
5.5 Signal Transmission Error (between Indoor Unit and Outdoor Unit) 154
5.6 Unspecified Voltage (between Indoor Unit and Outdoor Unit) 155
6. Troubleshooting for Outdoor Unit 156
6.1 Refrigerant Shortage 156
6.2 Low-voltage Detection or Over-voltage Detection 159
6.3 Signal Transmission Error (on Outdoor Unit PCB) (24/32 Class Only) 161
6.4 Unspecified Voltage (between Indoor Unit and Outdoor Unit) / Anti-icing Function in Other Rooms 162
6.5 Anti-icing Function 163
6.6 Outdoor Unit PCB Abnormality (24/32 Class Only) 165
6.7 OL Activation (Compressor Overload) 166
6.8 Compressor Lock 167
6.9 DC Fan Lock 168
6.10 Input Overcurrent Detection 169
6.11 Four-Way Valve Abnormality (18 Class Only) 170
6.12 Discharge Pipe Temperature Control 172
6.13 High Pressure Control in Cooling 173
6.14 Compressor Sensor System Abnormality (24/32 Class Only) 174
6.15 Position Sensor Abnormality 176
6.16 CT or Related Abnormality 179
6.17 Thermistor or Related Abnormality (Outdoor Unit) 181
6.18 Electrical Box Temperature Rise 183
6.19 Radiation Fin Temperature Rise 186
6.20 Output Overcurrent Detection 189
7. Check 191
7.1 Thermistor Resistance Check 191
7.2 Fan Motor Connector Check 192
7.3 Hall IC Check 192
7.4 Power Supply Waveform Check 193
7.5 Outdoor Electronic Expansion Valve Check 194
7.6 Four Way Valve Performance Check 195
7.7 Inverter Unit Refrigerant System Check 195
7.8 “Inverter Checker” Check 196
7.9 Rotation Pulse Check on the Outdoor Unit PCB 197
7.10 Installation Condition Check 198
7.11 Discharge Pressure Check 198
7.12 Outdoor Fan System Check 199
7.13 Main Circuit Short Check 199

7.14 Capacitor Voltage Check 200
7.15 Power Module Check 201

Part 7

Removal Procedure 202

1. Outdoor Unit: 2MXS18GVJU 203
   1.1 Removal of Outer Panels 203
   1.2 Removal of Electrical Box 204
   1.3 Removal of PCBs 209
   1.4 Removal of Fan Motor 212
   1.5 Removal of Sound Blankets 213
   1.6 Removal of Coils / Thermistors 215
   1.7 Removal of Four Way Valve / Defrost Solenoid Valve 217
   1.8 Removal of Distributor 219
   1.9 Removal of Compressor 220
2. Outdoor Unit: 3MXS24JVJU, 4MXS32GVJU 222
   2.1 Removal of Outer Panels 222
   2.2 Removal of Electrical Box 234
   2.3 Removal of PCBs 240
   2.4 Removal of Fan Motor 244
   2.5 Removal of Coils / Thermistors 245
   2.6 Removal of Sound Blankets 250
   2.7 Removal of Compressor 253

Part 8

Trial Operation and Field Settings 254

1. Pump Down Operation 255
2. Forced Operation 256
3. Wiring Error Check Function 257
4. Trial Operation 259
5. Field Settings 261
   5.1 Outdoor Unit 261
   5.2 Indoor Unit 264
6. Application of Silicon Grease to Power Transistor and Diode Bridge 267

Part 9

Appendix 268

1. Piping Diagrams 269
   1.1 Indoor Unit 269
   1.2 Outdoor Unit 271
2. Wiring Diagrams 273
   2.1 Indoor Unit 273
   2.2 Outdoor Unit 276

1. Safety Considerations

Read these ***SAFETY CONSIDERATIONS*** carefully before performing any repair work. Comply with these safety symbols without fail.Meanings of **DANGER**, **WARNING**, **CAUTION**, and **NOTE** Symbols:

⚠ **DANGER** ..... Indicates an imminently hazardous situation which, if not avoided, will result in death or serious injury.

⚠ **WARNING** ..... Indicates a potentially hazardous situation which, if not avoided, could result in death or serious injury.

⚠ **CAUTION** ..... Indicates a potentially hazardous situation which, if not avoided, may result in minor or moderate injury. It may also be used to alert against unsafe practices.

⚠ **NOTE** ..... Indicates situations that may result in equipment or property-damage accidents only.

1.1 Safety Considerations for Repair

- **If refrigerant gas leaks during repair or service, ventilate the area immediately. Refrigerant gas may produce toxic gas if it comes into contact with flames. Refrigerant gas is heavier than air and replaces oxygen. In the event of an accident, a massive leak could lead to oxygen depletion, especially in basements, and an asphyxiation hazard could occur leading to serious injury or death.**
- **Do not start or stop the air conditioner operation by plugging or unplugging the power cable plug if a plug is used. Plugging or unplugging the power cable plug to operate the equipment may cause an electrical shock or fire.**
- **Use parts listed in the service parts list and appropriate tools to conduct repair work. The use of inappropriate parts or tools may cause an electrical shock or fire.**
- **Disconnect power before disassembling the equipment for repairs. Working on the equipment that is connected to the power supply may cause an electric shock. If it is necessary to supply power to the equipment to conduct repairs or to inspect the circuits, do not touch any electrically charged sections of the equipment.**
- **The step-up capacitor supplies high-voltage electricity to the electrical components of the outdoor unit. Discharge the capacitor completely before conducting repair work. A charged capacitor may cause an electrical shock.**
- **If refrigerant gas is discharged during repair work, do not touch the discharged refrigerant gas. The refrigerant gas may cause frostbite.**
- **Use only pipes, flare nuts, tools, and other materials designed specifically for R410A refrigerant systems. Never use tools or materials designed for R22 refrigerant systems on an R410A refrigerant system. Doing so can cause a serious accident or an equipment failure.**
- **Check to see if the parts and wires are mounted and connected properly, and if the connections at the soldered or crimped terminals are secure. Improper installation and connections may cause excessive heat generation, fire, or electrical shock.**
- **Prior to disconnecting the suction or discharge pipe from the compressor at the welded section, pump-down the refrigerant gas completely in a well-ventilated place first. If there is refrigerant gas or oil remaining inside the compressor, the refrigerant gas or oil can discharge when the pipe is being disconnected and it may cause an injury.**
- **Wear a safety helmet, gloves, and a safety belt when working at an elevated height of more than 6.5 ft (2 m). Insufficient safety measures may cause a fall resulting in injury.**
- **Do not mix air or gas other than the specified refrigerant R410A to the refrigerant system. If air enters the refrigerant systems, it can cause an excessive high pressure resulting in equipment damage and injury.**
- **When relocating the equipment, check if the new installation site has sufficient strength to withstand the weight of the equipment. If the installation site does not have sufficient strength and the equipment is not properly secured, the equipment may fall and cause injury.**
- **Securely fasten the outside unit terminal cover (panel). If the terminal cover/panel is not fastened properly, dust or water may enter the outside unit causing fire or electric shock.**
- **When relocating the system, keep the refrigerant circuit free from substances other than the specified refrigerant (R-410A) such as air. Any presence of air or other foreign substance in the refrigerant circuit can cause an abnormal pressure rise or rupture, resulting in injury.**
- **If refrigerant gas leaks, locate the leaking point and repair it before charging refrigerant. After charging refrigerant, check for refrigerant leaks. If the leaking point cannot be located and the repair work must be stopped, perform a pump-down and close the service valve to prevent the refrigerant gas from leaking into the room. The refrigerant gas itself is harmless, but it may generate toxic gases if it comes into contact with flames.**

- **Do not repair the electrical components with wet hands. Working on the equipment with wet hands may cause an electrical shock.**
- **Do not clean the air conditioner by splashing water on it. Washing the unit with water may cause an electrical shock.**
- **Ground the unit when repairing equipment in a humid or wet place to avoid electrical shocks.**
- **Turn off the power when cleaning the equipment to prevent internal fans that rotate at high speed from starting suddenly as they can cause injury.**
- **Let the refrigerant lines cool down before performing any repair work. Working on the unit when the refrigerant lines are hot may cause burns.**
- **All welding and cutting operations must be done in a well-ventilated place to prevent the accumulation of toxic fumes or possibly oxygen deficiency to occur.**
- **Check the grounding and repair it if the equipment is not properly grounded. Improper grounding may cause an electrical shock.**
- **Measure the insulation resistance after the repair. The resistance must be 1MΩ or higher. Faulty insulation may cause an electrical shock.**
- **Check the drainage of the indoor unit after finishing repair work. Faulty drainage may cause water to enter the room resulting in wet floors and furniture.**
- **Do not tilt the unit when removing it. The water inside the unit may spill resulting in wet floors and furniture.**
- **Dismantling of the unit, disposal of the refrigerant, oil, and additional parts, should be done in accordance with the relevant local, state, and national regulations.**

1.2 Safety Considerations for Users

- **Never attempt to modify the equipment. Doing so can cause electrical shock, excessive heat generation, or fire.**
- **If the power cable and lead wires have scratches or have become deteriorated, have them replaced. Damaged cable and wires may cause an electrical shock or fire.**
- **Do not use a joined power cable or an extension cord, or share the same power outlet with other electrical appliances as it may cause an electrical shock or fire.**
- **Use an exclusive power circuit for the equipment. Insufficient circuit amperage capacity may cause an electrical shock or fire.**
- **Do not damage or modify the power cable. Damaged or modified power cables may cause an electrical shock or fire. Placing heavy items on the power cable or pulling the power cable may damage the cable.**
- **Check the unit foundation for damage on a continual basis, especially if it has been in use for a long time. If left in a damaged condition, the unit may fall and cause injury. If the installation platform or frame has corroded, have it replaced. A corroded platform or frame may cause the unit to fall resulting in injury.**
- **If the unit has a power cable plug and it is dirty, clean the plug before securely inserting it into a power outlet. If the plug has a loose connection, tighten it or it may cause electrical shock or fire.**
- **After replacing the battery in the remote controller, dispose of the old battery to prevent children from swallowing it. If a child swallows the battery, see a doctor immediately.**
- **Never remove the fan guard of the unit. A fan rotating at high speed without the fan guard is very dangerous.**
- **Before cleaning the unit, stop the operation of the unit by turning the power off or by pulling the power cable plug out from its receptacle. Otherwise an electrical shock or injury may result.**
- **Do not wipe the controller operation panel with benzene, thinner, chemical dust cloth, etc. The panel may get discolored or the coating can peel off. If it is extremely dirty, soak a cloth in a water-diluted neutral detergent, squeeze it well, and wipe the panel clean. Then wipe it with another dry cloth.**

Part 1
List of Functions

1. Functions.....2

1. Functions

Category	Functions	CTXS07JVJU CTXS09/12HVJU	FTXS15/18HVJU
Basic Function	Inverter (with Inverter Power Control)	●	●
	Operation Limit for Cooling (°FDB)	—	—
	Operation Limit for Heating (°FWB)	—	—
	PAM Control	—	—
Compressor	Oval Scroll Compressor	—	—
	Swing Compressor	—	—
	Rotary Compressor	—	—
	Reluctance DC Motor	—	—
Comfortable Airflow	Power-Airflow Louver (Horizontal Blade)	—	—
	Power-Airflow Dual Louvers	●	●
	Power-Airflow Diffuser	—	—
	Wide-Angle Fins (Vertical Blades)	●	●
	Vertical Auto-Swing (Up and Down)	●	●
	Horizontal Auto-Swing (Right and Left)	●	●
	3-D Airflow	●	●
	COMFORT AIRFLOW Operation	—	—
Comfort Control	Auto Fan Speed	●	●
	Indoor Unit Quiet Operation	●	●
	NIGHT QUIET Mode (Automatic)	—	—
	OUTDOOR UNIT QUIET Operation (Manual)	●	●
	INTELLIGENT EYE Operation	●	●
	Quick Warming Function	—	—
	Hot-Start Function	●	●
	Automatic Defrosting	—	—
Operation	Automatic Operation	●	●
	Program Dry Operation	●	●
	Fan Only	●	●
Lifestyle Convenience	New POWERFUL Operation (Non-Inverter)	—	—
	Inverter POWERFUL Operation	●	●
	Priority-Room Setting	—	—
	COOL / HEAT Mode Lock	—	—
	HOME LEAVE Operation	●	●
	ECONO Operation	—	—
	Indoor Unit [ON/OFF] Button	●	●
	Signal Receiving Sign	●	●
	R/C with Back Light	●	●
	Temperature Display	—	—

Category	Functions	CTXS07JVJU CTXS09/12HVJU	FTXS15/18HVJU
Health & Clean	Air-Purifying Filter	—	—
	Photocatalytic Deodorizing Filter	—	—
	Air-Purifying Filter with Photocatalytic Deodorizing Function	●	●
	Titanium Apatite Photocatalytic Air-Purifying Filter	—	—
	Air Filter (Prefilter)	●	●
	Wipe-Clean Flat Panel	●	●
	Washable Grille	—	—
	Filter Cleaning Indicator	—	—
	Good-Sleep Cooling Operation	—	—
Timer	WEEKLY TIMER Operation	—	—
	24-Hour ON/OFF TIMER	●	●
	NIGHT SET Mode	●	●
Worry Free "Reliability & Durability"	Auto-Restart (after Power Failure)	●	●
	Self-Diagnosis (Digital, LED) Display	●	●
	Wiring Error Check Function	—	—
	Anti-Corrosion Treatment of Outdoor Heat Exchanger	—	—
Flexibility	Multi-Split / Split Type Compatible Indoor Unit	—	●
	Flexible Power Supply Correspondence	—	—
	High Ceiling Application	—	—
	Chargeless	—	—
	Either Side Drain (Right or Left)	●	●
	Power Selection	—	—
	°F/°C Changeover R/C Temperature Display (factory setting: °F)	●	●
Remote Control	5-Room Centralized Controller (Option)	●	●
	Remote Control Adaptor (Normal Open Pulse Contact) (Option)	●	●
	Remote Control Adaptor (Normal Open Contact) (Option)	●	●
	DIII-NET Compatible (Adaptor) (Option)	●	●
Remote Controller	Wireless	●	●
	Wired (Option)	●	●

Note: ● :Includes Function
— : Function not Included

Category	Functions	CTXS07LVJU	FTXS09/12/15/18LVJU	Category	Functions	CTXS07LVJU	FTXS09/12/15/18LVJU
Basic Function	Inverter (with Inverter Power Control)	●	●	Health & Clean	Air-Purifying Filter	—	—
	Operation Limit for Cooling (°FDB)	—	—		Photocatalytic Deodorizing Filter	—	—
	Operation Limit for Heating (°FWB)	—	—		Air-Purifying Filter with Photocatalytic Deodorizing Function	—	—
	PAM Control	—	—		Titanium Apatite Photocatalytic Air-Purifying Filter	●	●
Compressor	Oval Scroll Compressor	—	—				
	Swing Compressor	—	—		Air Filter (Prefilter)	●	●
	Rotary Compressor	—	—		Wipe-clean Flat Panel	●	●
	Reluctance DC Motor	—	—		Washable Grille	—	—
Comfortable Airflow	Power-Airflow Louver (Horizontal Blade)	—	—		Filter Cleaning Indicator	—	—
	Power-Airflow Dual Louvers	●	●		Good-Sleep Cooling Operation	—	—
	Power-Airflow Diffuser	—	—	Timer	WEEKLY TIMER Operation	●	●
	Wide-Angle Fins (Vertical Blades)	●	●		24-Hour ON/OFF TIMER	●	●
	Vertical Auto-Swing (Up and Down)	●	●		NIGHT SET Mode	●	●
	Horizontal Auto-Swing (Right and Left)	●	●	Worry Free “Reliability & Durability”	Auto-Restart (after Power Failure)	●	●
	3-D Airflow	●	●		Self-Diagnosis (Digital, LED) Display	●	●
	COMFORT AIRFLOW Operation	●	●		Wiring Error Check Function	—	—
Comfort Control	Auto Fan Speed	●	●		Anticorrosion Treatment of Outdoor Heat Exchanger	—	—
	Indoor Unit Quiet Operation	●	●				
	NIGHT QUIET Mode (Automatic)	—	—	Flexibility	Multi-Split / Split Type Compatible Indoor Unit	—	●
	OUTDOOR UNIT QUIET Operation (Manual)	●	●		Flexible Power Supply Correspondence	—	—
	INTELLIGENT EYE Operation	●	●		High Ceiling Application	—	—
	Quick Warming Function	—	—		Chargeless	—	—
	Hot-Start Function	●	●		Either Side Drain (Right or Left)	●	●
	Automatic Defrosting	—	—		Power Selection	—	—
Operation	Automatic Operation	●	●		°F/°C Changeover R/C Temperature Display (factory setting: °F)	●	●
	Program Dry Function	●	●				
	Fan Only	●	●	Remote Control	5-Room Centralized Controller (Option)	●	●
Lifestyle Convenience	New POWERFUL Operation (Non-Inverter)	—	—		Remote Control Adaptor (Normal Open-Pulse Contact) (Option)	●	●
	Inverter POWERFUL Operation	●	●		Remote Control Adaptor (Normal Open Contact) (Option)	●	●
	Priority-Room Setting	—	—				
	COOL / HEAT Mode Lock	—	—		DIII-NET Compatible (Adaptor) (Option)	●	●
	HOME LEAVE Operation	—	—	Remote Controller	Wireless	●	●
	ECONO Operation	●	●		Wired (Option)	●	●
	Indoor Unit [ON/OFF] Button	●	●				
	Signal Receiving Sign	●	●				
	R/C with Back Light	●	●				
	Temperature Display	—	—				

Note: ● :Includes Function
— : Function not Included

Category	Functions	FDXS09/12DVJU
Basic Function	Inverter (with Inverter Power Control)	●
	Operation Limit for Cooling (°FDB)	—
	Operation Limit for Heating (°FWB)	—
	PAM Control	—
Compressor	Oval Scroll Compressor	—
	Swing Compressor	—
	Rotary Compressor	—
	Reluctance DC Motor	—
Comfortable Airflow	Power-Airflow Louver (Horizontal Blade)	—
	Power-Airflow Dual Louvers	—
	Power-Airflow Diffuser	—
	Wide-Angle Fins (Vertical Blades)	—
	Vertical Auto-Swing (Up and Down)	—
	Horizontal Auto-Swing (Right and Left)	—
	3-D Airflow	—
	COMFORT AIRFLOW Mode	—
Comfort Control	Auto Fan Speed	●
	Indoor Unit Quiet Operation	●
	NIGHT QUIET Mode (Automatic)	—
	OUTDOOR UNIT QUIET Operation (Manual)	●
	INTELLIGENT EYE Operation	—
	Quick Warming Function	—
	Hot-Start Function	●
	Automatic Defrosting	—
Operation	Automatic Operation	●
	Program Dry Operation	●
	Fan Only	●
Lifestyle Convenience	New POWERFUL Operation (Non-Inverter)	—
	Inverter POWERFUL Operation	●
	Priority-Room Setting	—
	COOL / HEAT Mode Lock	—
	HOME LEAVE Operation	●
	ECONO Operation	—
	Indoor Unit [ON/OFF] Button	●
	Signal Receiving Sign	●
	R/C with Back Light	—
	Temperature Display	—

Category	Functions	FDXS09/12DVJU
Health & Clean	Air-Purifying Filter	—
	Photocatalytic Deodorizing Filter	—
	Air-Purifying Filter with Photocatalytic Deodorizing Function	—
	Titanium Apatite Photocatalytic Air-Purifying Filter	—
	Air Filter (Prefilter)	●
	Wipe-Clean Flat Panel	—
	Washable Grille	—
	Filter Cleaning Indicator	—
	Good-Sleep Cooling Operation	—
Timer	WEEKLY TIMER Operation	—
	24-Hour ON/OFF TIMER	●
	NIGHT SET Mode	●
Worry Free “Reliability & Durability”	Auto-Restart (after Power Failure)	●
	Self-Diagnosis (Digital, LED) Display	●
	Wiring Error Check Function	—
	Anticorrosion Treatment of Outdoor Heat Exchanger	—
Flexibility	Multi-Split / Split Type Compatible Indoor Unit	●
	Flexible Power Supply Correspondence	—
	High Ceiling Application	—
	Chargeless	—
	Either Side Drain (Right or Left)	—
	Power Selection	—
	°F/°C Changeover R/C Temperature Display (factory setting: °F)	—
Remote Control	5-Room Centralized Controller (Option)	●
	Remote Control Adaptor (Normal Open Pulse Contact) (Option)	●
	Remote Control Adaptor (Normal Open Contact) (Option)	●
	DIII-NET Compatible (Adaptor) (Option)	●
Remote Controller	Wireless	●
	Wired (Option)	●

Note: ● :Includes Function
— : Function not Included

Category	Functions	FDXS09/12LVJU	CDXS15/18LVJU	Category	Functions	FDXS09/12LVJU	CDXS15/18LVJU
Basic Function	Inverter (with Inverter Power Control)	●	●	Health & Clean	Air-Purifying Filter	—	—
	Operation Limit for Cooling (°FDB)	—	—		Photocatalytic Deodorizing Filter	—	—
	Operation Limit for Heating (°FWB)	—	—		Air-Purifying Filter with Photocatalytic Deodorizing Function	—	—
	PAM Control	—	—		Titanium Apatite Photocatalytic Air-Purifying Filter	—	—
Compressor	Oval Scroll Compressor	—	—				
	Swing Compressor	—	—		Air Filter (Prefilter)	●	●
	Rotary Compressor	—	—		Wipe-clean Flat Panel	—	—
	Reluctance DC Motor	—	—		Washable Grille	—	—
Comfortable Airflow	Power-Airflow Louver (Horizontal Blade)	—	—		Filter Cleaning Indicator	—	—
	Power-Airflow Dual Louvers	—	—		Good-Sleep Cooling Operation	—	—
	Power-Airflow Diffuser	—	—	Timer	WEEKLY TIMER Operation	—	—
	Wide-Angle Fins (Vertical Blades)	—	—		24-Hour ON/OFF TIMER	●	●
	Vertical Auto-Swing (Up and Down)	—	—		NIGHT SET Mode	●	●
	Horizontal Auto-Swing (Right and Left)	—	—	Worry Free “Reliability & Durability”	Auto-Restart (after Power Failure)	●	●
	3-D Airflow	—	—		Self-Diagnosis (Digital, LED) Display	●	●
	COMFORT AIRFLOW Operation	—	—		Wiring Error Check Function	—	—
Comfort Control	Auto Fan Speed	●	●		Anticorrosion Treatment of Outdoor Heat Exchanger	—	—
	Indoor Unit Quiet Operation	●	●				
	NIGHT SET Mode (Automatic)	—	—	Flexibility	Multi-Split / Split Type Compatible Indoor Unit	●	—
	OUTDOOR UNIT QUIET Operation (Manual)	●	●		Flexible Power Supply Correspondence	—	—
	INTELLIGENT EYE Operation	—	—		High Ceiling Application	—	—
	Quick Warming Function	—	—		Chargeless	—	—
	Hot-Start Function	●	●		Either Side Drain (Right or Left)	—	—
	Automatic Defrosting	—	—		Power Selection	—	—
Operation	Automatic Operation	●	●		°F/°C Changeover R/C Temperature Display (factory setting: °F)	●	●
	Program Dry Function	●	●				
	Fan Only	●	●	Remote Control	5-Room Centralized Controller (Option)	●	●
Lifestyle Convenience	New POWERFUL Operation (Non-Inverter)	—	—		Remote Control Adaptor (Normal Open-Pulse Contact) (Option)	●	●
	Inverter POWERFUL Operation	●	●		Remote Control Adaptor (Normal Open Contact) (Option)	●	●
	Priority-Room Setting	—	—				
	COOL / HEAT Mode Lock	—	—		DIII-NET Compatible (Adaptor) (Option)	●	●
	HOME LEAVE Operation	—	—	Remote Controller	Wireless	●	●
	ECONO Operation	●	●		Wired (Option)	●	●
	Indoor Unit [ON/OFF] Button	●	●				
	Signal Receiving Sign	●	●				
	R/C with Back Light	●	●				
	Temperature Display	—	—				

Note: ● :Includes Function
— : Function not Included

Category	Functions	2MXS18GVJU	3MXS24JVJU 4MXS32GVJU
Basic Function	Inverter (with Inverter Power Control)	●	●
	Operation Limit for Cooling (°CDB)	-10 ~ 46	-10 ~ 46
	Operation Limit for Cooling (°FDB)	14 ~ 114.8	14 ~ 114.8
	Operation Limit for Heating (°CWB)	-15 ~ 15.5	-15 ~ 15.5
	Operation Limit for Heating (°FWB)	5 ~ 59.9	5 ~ 59.9
	PAM Control	●	●
Compressor	Oval Scroll Compressor	—	—
	Swing Compressor	●	●
	Rotary Compressor	—	—
	Reluctance DC Motor	●	●
Comfortable Airflow	Power-Airflow Louver (Horizontal Blade)	—	—
	Power-Airflow Dual Louvers	—	—
	Power-Airflow Diffuser	—	—
	Wide-Angle Fins (Vertical Blades)	—	—
	Vertical Auto-Swing (Up and Down)	—	—
	Horizontal Auto-Swing (Right and Left)	—	—
	3-D Airflow	—	—
	COMFORT AIRFLOW Operation	—	—
Comfort Control	Auto Fan Speed	—	—
	Indoor Unit Quiet Operation	—	—
	NIGHT QUIET Mode (Automatic)	●	●
	OUTDOOR UNIT QUIET Operation (Manual)	●	●
	INTELLIGENT EYE Operation	—	—
	Quick Warming Function	●	●
	Hot-Start Function	—	—
	Automatic Defrosting	●	●
Operation	Automatic Operation	—	—
	Program Dry Function	—	—
	Fan Only	—	—
Lifestyle Convenience	New POWERFUL Operation (Non-Inverter)	—	—
	Inverter POWERFUL Operation	—	—
	Priority-Room Setting	●	●
	COOL / HEAT Mode Lock	●	●
	HOME LEAVE Operation	—	—
	ECONO Operation	—	—
	Indoor Unit [ON/OFF] Button	—	—
	Signal Receiving Sign	—	—
	R/C with Back Light	—	—
	Temperature Display	—	—

Category	Functions	2MXS18GVJU	3MXS24JVJU 4MXS32GVJU
Health & Clean	Air-Purifying Filter	—	—
	Photocatalytic Deodorizing Filter	—	—
	Air-Purifying Filter with Photocatalytic Deodorizing Function	—	—
	Titanium Apatite Photocatalytic Air-Purifying Filter	—	—
	Air Filter (Prefilter)	—	—
	Wipe-clean Flat Panel	—	—
	Washable Grille	—	—
	Filter Cleaning Indicator	—	—
	Good-Sleep Cooling Operation	—	—
Timer	WEEKLY TIMER Operation	—	—
	24-Hour ON/OFF Timer	—	—
	NIGHT SET Mode	—	—
Worry Free "Reliability & Durability"	Auto-Restart (after Power Failure)	—	—
	Self-Diagnosis (Digital, LED) Display	●	●
	Wiring Error Check Function	●	●
	Anti-Corrosion Treatment of Outdoor Heat Exchanger	●	●
Flexibility	Multi-Split / Split Type Compatible Indoor Unit	—	—
	Flexible Power Supply Correspondence	—	—
	High Ceiling Application	—	—
	Chargeless	98.4 ft (30 m)	131.6 ft (40 m)
	Either Side Drain (Right or Left)	—	—
	Power Selection	—	—
	°F/°C Changeover R/C Temperature Display (factory setting: °F)	—	—
Remote Control	5-Room Centralized Controller (Option)	—	—
	Remote Control Adaptor (Normal Open-Pulse Contact) (Option)	—	—
	Remote Control Adaptor (Normal Open Contact) (Option)	—	—
	DIII-NET Compatible (Adaptor) (Option)	—	—
Remote Controller	Wireless	—	—
	Wired (Option)	—	—

Notes: ● :Includes Function
— : Function not Included

Part 2
Specifications

1. Indoor Unit.....8
2. Outdoor Unit.....13

1. Indoor Unit

CTXS, FTXS Series

60 Hz, 208 - 230 V

Model			CTXS07JVJU	
			Cooling	Heating
Rated Capacity			7 kBtu/h Class	
Front Panel Color			White	
Airflow Rate	H	cfm (m³/min)	388 (11.0)	400 (11.3)
	M		335 (9.5)	357 (10.1)
	L		283 (8.0)	314 (8.9)
Fan	Type		Cross Flow Fan	
	Motor Output	W	40	
	Speed	Steps	5 Steps, Quiet, Auto	
Air Direction Control			Right, Left, Horizontal, Downward	
Air Filter			Removable / Washable / Mildew Proof	
Running Current (Rated)		A	0.18	0.2
Power Consumption (Rated)		W	40	45
Power Factor (Rated)		%	96.6	97.8
Temperature Control			Microcomputer Control	
Dimensions (H × W × D)		in. (mm)	11-7/16 × 31-5/16 × 9-3/8 (290 × 795 × 238)	
Packaged Dimensions (H × W × D)		in. (mm)	11 × 33-1/16 × 13-5/16 (280 × 840 × 338)	
Weight (Mass)		Lbs (kg)	20 (9)	
Gross Weight (Gross Mass)		Lbs (kg)	29 (13)	
Sound Pressure Level	H / M / L	dB(A)	44 / 40 / 35	44 / 39 / 34
Heat Insulation			Both Liquid and Gas Pipes	
Piping Connection	Liquid	in. (mm)	ϕ 1/4 (ϕ 6.4)	
	Gas	in. (mm)	ϕ 3/8 (ϕ 9.5)	
	Drain	in. (mm)	ϕ 11/16 (ϕ 18.0)	
Drawing No.			3D066156A	

Model			CTXS09HVJU		CTXS12HVJU	
			Cooling	Heating	Cooling	Heating
Rated Capacity			9 kBtu/h Class		12 kBtu/h Class	
Front Panel Color			White		White	
Airflow Rate	H	cfm (m³/min)	388 (11.0)	400 (11.3)	388 (11.0)	400 (11.3)
	M		335 (9.5)	357 (10.1)	335 (9.5)	357 (10.1)
	L		283 (8.0)	314 (8.9)	283 (8.0)	314 (8.9)
Fan	Type		Cross Flow Fan		Cross Flow Fan	
	Motor Output	W	40		40	
	Speed	Steps	5 Steps, Quiet, Auto		5 Steps, Quiet, Auto	
Air Direction Control			Right, Left, Horizontal, Downward		Right, Left, Horizontal, Downward	
Air Filter			Removable / Washable / Mildew Proof		Removable / Washable / Mildew Proof	
Running Current (Rated)		A	0.18	0.2	0.18	0.2
Power Consumption (Rated)		W	40	45	40	45
Power Factor (Rated)		%	96.6	97.8	96.6	97.8
Temperature Control			Microcomputer Control		Microcomputer Control	
Dimensions (H × W × D)		in. (mm)	11-7/16 × 31-5/16 × 9-3/8 (290 × 795 × 238)		11-7/16 × 31-5/16 × 9-3/8 (290 × 795 × 238)	
Packaged Dimensions (H × W × D)		in. (mm)	11 × 33-1/16 × 13-5/16 (280 × 840 × 338)		11 × 33-1/16 × 13-5/16 (280 × 840 × 338)	
Weight (Mass)		Lbs (kg)	20 (9)		20 (9)	
Gross Weight (Gross Mass)		Lbs (kg)	29 (13)		29 (13)	
Sound Pressure Level	H / M / L	dB(A)	44 / 40 / 35	44 / 39 / 34	45 / 41 / 36	45 / 40 / 35
Heat Insulation			Both Liquid and Gas Pipes		Both Liquid and Gas Pipes	
Piping Connection	Liquid	in. (mm)	ϕ 1/4 (ϕ 6.4)		ϕ 1/4 (ϕ 6.4)	
	Gas	in. (mm)	ϕ 3/8 (ϕ 9.5)		ϕ 3/8 (ϕ 9.5)	
	Drain	in. (mm)	ϕ 11/16 (ϕ 18.0)		ϕ 11/16 (ϕ 18.0)	
Drawing No.			3D062870A		3D062871A	

Conversion Formulae
kcal/h = kW × 860 Btu/h = kW × 3412 cfm = m³/min × 35.3

60 Hz, 230 V

Model			FTXS15HVJU		FTXS18HVJU	
			Cooling	Heating	Cooling	Heating
Rated Capacity			15 kBtu/h Class		18 kBtu/h Class	
Front Panel Color			White		White	
Airflow Rate	H	cfm (m³/min)	519 (14.7)	515 (14.6)	549 (15.5)	609 (17.2)
	M		436 (12.3)	459 (13.0)	476 (13.5)	529 (15.0)
	L		353 (10.0)	402 (11.4)	402 (11.4)	448 (12.7)
Fan	Type		Cross Flow Fan		Cross Flow Fan	
	Motor Output	W	43		43	
	Speed	Steps	5 Steps, Quiet, Auto		5 Steps, Quiet, Auto	
Air Direction Control			Right, Left, Horizontal, Downward		Right, Left, Horizontal, Downward	
Air Filter			Removable / Washable / Mildew Proof		Removable / Washable / Mildew Proof	
Running Current (Rated)		A	0.18		0.18	
Power Consumption (Rated)		W	40		40	
Power Factor (Rated)		%	96.6		96.6	
Temperature Control			Microcomputer Control		Microcomputer Control	
Dimensions (H × W × D)		in. (mm)	11-7/16 × 41-5/16 × 9-3/8 (290 × 1,050 × 238)		11-7/16 × 41-5/16 × 9-3/8 (290 × 1,050 × 238)	
Packaged Dimensions (H × W × D)		in. (mm)	13-1/4 × 45-3/16 × 14-7/16 (337 × 1,147 × 366)		13-1/4 × 45-3/16 × 14-7/16 (337 × 1,147 × 366)	
Weight (Mass)		Lbs (kg)	26.5 (12)		26.5 (12)	
Gross Weight (Gross Mass)		Lbs (kg)	38 (17)		38 (17)	
Sound Pressure Level	H / M / L	dB(A)	45 / 41 / 36	44 / 40 / 35	45 / 41 / 36	44 / 40 / 35
Heat Insulation			Both Liquid and Gas Pipes		Both Liquid and Gas Pipes	
Piping Connection	Liquid	in. (mm)	ϕ 1/4 (ϕ 6.4)		ϕ 1/4 (ϕ 6.4)	
	Gas	in. (mm)	ϕ 1/2 (ϕ 12.7)		ϕ 1/2 (ϕ 12.7)	
	Drain	in. (mm)	ϕ 11/16 (ϕ 18.0)		ϕ 11/16 (ϕ 18.0)	
Drawing No.			3D062866A		3D062868A	

60 Hz, 208 - 230 V

Model			CTXS07LVJU	
			Cooling	Heating
Rated Capacity			7 kBtu/h Class	
Front Panel Color			White	
Airflow Rate	H	cfm (m³/min)	332 (9.4)	350 (9.9)
	M		261 (7.4)	290 (8.2)
	L		194 (5.5)	233 (6.6)
	SL		145 (4.1)	219 (6.2)
Fan	Type		Cross Flow Fan	
	Motor Output	W	23	
	Speed	Steps	5 Steps, Quiet, Auto	
Air Direction Control			Right, Left, Horizontal, Downward	
Air Filter			Removable / Washable / Mildew Proof	
Running Current (Rated)		A	0.09 - 0.08	0.11 - 0.10
Power Consumption (Rated)		W	18 - 18	21 - 21
Power Factor (Rated)		%	96.2 - 97.8	91.8 - 91.3
Temperature Control			Microcomputer Control	
Dimensions (H × W × D)		in. (mm)	11-5/8 × 31-1/2 × 8-7/16 (295 × 800 × 215)	
Packaged Dimensions (H × W × D)		in. (mm)	10-13/16 × 34-1/4 × 14-7/16 (274 × 870 × 366)	
Weight (Mass)		Lbs (kg)	20 (9)	
Gross Weight (Gross Mass)		Lbs (kg)	29 (13)	
Sound Pressure Level	H / M / L / SL	dB(A)	38 / 32 / 25 / 22	38 / 33 / 28 / 25
Sound Power Level		dB	54	54
Heat Insulation			Both Liquid and Gas Pipes	
Piping Connections	Liquid	in. (mm)	ϕ 1/4 (ϕ 6.4)	
	Gas	in. (mm)	ϕ 3/8 (ϕ 9.5)	
	Drain	in. (mm)	ϕ 5/8 (ϕ 16.0)	
Drawing No.			3D075490	

Conversion Formulae
kcal/h = kW × 860 Btu/h = kW × 3412 cfm = m³/min × 35.3

60 Hz, 208 - 230 V

Model			FTXS09LVJU		FTXS12LVJU	
			Cooling	Heating	Cooling	Heating
Rated Capacity			9 kBtu/h Class		12 kBtu/h Class	
Front Panel Color			White		White	
Airflow Rate	H	cfm (m³/min)	381 (10.8)	420 (11.9)	403 (11.4)	438 (12.4)
	M		279 (7.9)	321 (9.1)	307 (8.7)	335 (9.5)
	L		194 (5.5)	233 (6.6)	205 (5.8)	240 (6.8)
	SL		145 (4.1)	219 (6.2)	155 (4.4)	212 (6.0)
Fan	Type		Cross Flow Fan		Cross Flow Fan	
	Motor Output	W	23		23	
	Speed	Steps	5 Steps, Quiet, Auto		5 Steps, Quiet, Auto	
Air Direction Control			Right, Left, Horizontal, Downward		Right, Left, Horizontal, Downward	
Air Filter			Removable / Washable / Mildew Proof		Removable / Washable / Mildew Proof	
Running Current (Rated)		A	0.09 - 0.08	0.11 - 0.10	0.13 - 0.12	0.14 - 0.13
Power Consumption (Rated)		W	18 - 18	21 - 21	26 - 26	28 - 28
Power Factor (Rated)		%	96.2 - 97.8	91.8 - 91.3	96.2 - 94.2	96.2 - 93.6
Temperature Control			Microcomputer Control		Microcomputer Control	
Dimensions (H × W × D)		in. (mm)	11-5/8 × 31-1/2 × 8-7/16 (295 × 800 × 215)		11-5/8 × 31-1/2 × 8-7/16 (295 × 800 × 215)	
Packaged Dimensions (H × W × D)		in. (mm)	10-13/16 × 34-1/4 × 14-7/16 (274 × 870 × 366)		10-13/16 × 34-1/4 × 14-7/16 (274 × 870 × 366)	
Weight (Mass)		Lbs (kg)	20 (9)		22 (10)	
Gross Weight (Gross Mass)		Lbs (kg)	29 (13)		31 (14)	
Sound Pressure Level	H / M / L / SL	dB(A)	41 / 33 / 25 / 22	42 / 35 / 28 / 25	45 / 37 / 29 / 23	45 / 39 / 29 / 26
Sound Power Level		dB	57	58	61	61
Heat Insulation			Both Liquid and Gas Pipes		Both Liquid and Gas Pipes	
Piping Connections	Liquid	in. (mm)	ϕ 1/4 (ϕ 6.4)		ϕ 1/4 (ϕ 6.4)	
	Gas	in. (mm)	ϕ 3/8 (ϕ 9.5)		ϕ 3/8 (ϕ 9.5)	
	Drain	in. (mm)	ϕ 5/8 (ϕ 16.0)		ϕ 5/8 (ϕ 16.0)	
Drawing No.			3D075491		3D075492	

Model			FTXS15LVJU		FTXS18LVJU	
			Cooling	Heating	Cooling	Heating
Rated Capacity			15 kBtu/h Class		18 kBtu/h Class	
Front Panel Color			White		White	
Airflow Rate	H	cfm (m³/min)	568 (16.1)	593 (16.8)	583 (16.5)	625 (17.7)
	M		477 (13.5)	505 (14.3)	484 (13.7)	526 (14.9)
	L		385 (10.9)	417 (11.8)	385 (10.9)	431 (12.2)
	SL		360 (10.2)	371 (10.5)	360 (10.2)	399 (11.3)
Fan	Type		Cross Flow Fan		Cross Flow Fan	
	Motor Output	W	48		48	
	Speed	Steps	5 Steps, Quiet, Auto		5 Steps, Quiet, Auto	
Air Direction Control			Right, Left, Horizontal, Downward		Right, Left, Horizontal, Downward	
Air Filter			Removable / Washable / Mildew Proof		Removable / Washable / Mildew Proof	
Running Current (Rated)		A	0.31 - 0.29	0.31 - 0.29	0.32 - 0.30	0.32 - 0.30
Power Consumption (Rated)		W	38 - 38	38 - 38	38 - 38	38 - 38
Power Factor (Rated)		%	58.9 - 57.0	58.9 - 57.0	57.1 - 55.1	57.1 - 55.1
Temperature Control			Microcomputer Control		Microcomputer Control	
Dimensions (H × W × D)		in. (mm)	13-3/8 × 41-5/16 × 9-3/4 (340 × 1,050 × 248)		13-3/8 × 41-5/16 × 9-3/4 (340 × 1,050 × 248)	
Packaged Dimensions (H × W × D)		in. (mm)	13 × 45-11/16 × 16-7/8 (331 × 1,160 × 429)		13 × 45-11/16 × 16-7/8 (331 × 1,160 × 429)	
Weight (Mass)		Lbs (kg)	31 (14)		31 (14)	
Gross Weight (Gross Mass)		Lbs (kg)	44 (20)		44 (20)	
Sound Pressure Level	H / M / L / SL	dB(A)	45 / 40 / 35 / 32	43 / 38 / 33 / 30	46 / 41 / 36 / 33	45 / 40 / 35 / 32
Sound Power Level		dB	61	59	62	61
Heat Insulation			Both Liquid and Gas Pipes		Both Liquid and Gas Pipes	
Piping Connections	Liquid	in. (mm)	ϕ 1/4 (ϕ 6.4)		ϕ 1/4 (ϕ 6.4)	
	Gas	in. (mm)	ϕ 1/2 (ϕ 12.7)		ϕ 1/2 (ϕ 12.7)	
	Drain	in. (mm)	ϕ 5/8 (ϕ 16.0)		ϕ 5/8 (ϕ 16.0)	
Drawing No.			3D075043		3D075044	

Conversion Formulae
kcal/h = kW × 860 Btu/h = kW × 3412 cfm = m³/min × 35.3

CDXS, FDXS Series

60 Hz, 230 V

Model			FDXS09DVJU		FDXS12DVJU	
			Cooling	Heating	Cooling	Heating
Rated Capacity			9 kBtu/h Class		12 kBtu/h Class	
External Static Pressure		inAq (Pa)	0.12 (30)		0.12 (30)	
Airflow Rate	H	cfm (m³/min)	305 (8.6)	305 (8.6)	305 (8.6)	305 (8.6)
	M		280 (7.9)	280 (7.9)	280 (7.9)	280 (7.9)
	L		260 (7.4)	260 (7.4)	260 (7.4)	260 (7.4)
Fan	Type		Sirocco Fan		Sirocco Fan	
	Motor Output	W	62		62	
	Speed	Steps	5 Steps, Quiet, Auto		5 Steps, Quiet, Auto	
Air Filter			Removable / Washable / Mildew Proof		Removable / Washable / Mildew Proof	
Running Current (Rated)		A	0.52	0.52	0.52	0.52
Power Consumption (Rated)		W	72	72	72	72
Power Factor (Rated)		%	60.2	60.2	60.2	60.2
Temperature Control			Microcomputer Control		Microcomputer Control	
Dimensions (H × W × D)		in. (mm)	7-7/8 × 27-9/16 × 24-7/16 (200 × 700 × 620)		7-7/8 × 27-9/16 × 24-7/16 (200 × 700 × 620)	
Packaged Dimensions (H × W × D)		in. (mm)	10-13/16 × 36-5/16 × 30-1/4 (274 × 923 × 768)		10-13/16 × 36-5/16 × 30-1/4 (274 × 923 × 768)	
Weight (Mass)		Lbs (kg)	47 (21)		47 (21)	
Gross Weight (Gross Mass)		Lbs (kg)	64 (29)		64 (29)	
Sound Pressure Level	H / M / L	dB(A)	35 / 33 / 31	35 / 33 / 31	35 / 33 / 31	35 / 33 / 31
Heat Insulation			Both Liquid and Gas Pipes		Both Liquid and Gas Pipes	
Piping Connection	Liquid	in. (mm)	ϕ 1/4 (ϕ 6.4)		ϕ 1/4 (ϕ 6.4)	
	Gas	in. (mm)	ϕ 3/8 (ϕ 9.5)		ϕ 3/8 (ϕ 9.5)	
	Drain	in. (mm)	VP20 (O.D. ϕ 1-1/32 (ϕ 26.0), I.D. ϕ 25/32 (ϕ 20.0))		VP20 (O.D. ϕ 1-1/32 (ϕ 26.0), I.D. ϕ 25/32 (ϕ 20.0))	
Drawing No.			3D051781A		3D051782A	

60 Hz, 208 - 230 V

Model			FDXS09LVJU		FDXS12LVJU	
			Cooling	Heating	Cooling	Heating
Rated Capacity			9 kBtu/h Class		12 kBtu/h Class	
External Static Pressure		inAq (Pa)	0.12 (30)		0.12 (30)	
Airflow Rate	H	cfm (m³/min)	305 (8.6)	305 (8.6)	305 (8.6)	305 (8.6)
	M		280 (7.9)	280 (7.9)	280 (7.9)	280 (7.9)
	L		260 (7.4)	260 (7.4)	260 (7.4)	260 (7.4)
	SL		235 (6.7)	235 (6.7)	235 (6.7)	235 (6.7)
Fan	Type		Sirocco Fan		Sirocco Fan	
	Motor Output	W	62		62	
	Speed	Steps	5 Steps, Quiet, Auto		5 Steps, Quiet, Auto	
Air Filter			Removable / Washable / Mildew Proof		Removable / Washable / Mildew Proof	
Running Current (Rated)		A	0.58 - 0.52	0.58 - 0.52	0.58 - 0.52	0.58 - 0.52
Power Consumption (Rated)		W	72 - 72	72 - 72	72 - 72	72 - 72
Power Factor (Rated)		%	59.7 - 60.2	59.7 - 60.2	59.7 - 60.2	59.7 - 60.2
Temperature Control			Microcomputer Control		Microcomputer Control	
Dimensions (H × W × D)		in. (mm)	7-7/8 × 27-9/16 × 24-7/16 (200 × 700 × 620)		7-7/8 × 27-9/16 × 24-7/16 (200 × 700 × 620)	
Packaged Dimensions (H × W × D)		in. (mm)	10-13/16 × 36-5/16 × 30-1/4 (274 × 923 × 768)		10-13/16 × 36-5/16 × 30-1/4 (274 × 923 × 768)	
Weight (Mass)		Lbs (kg)	47 (21)		47 (21)	
Gross Weight (Gross Mass)		Lbs (kg)	64 (29)		64 (29)	
Sound Pressure Level	H / M / L	dB(A)	35 / 33 / 31	35 / 33 / 31	35 / 33 / 31	35 / 33 / 31
Sound Power Level		dB	51	51	51	51
Heat Insulation			Both Liquid and Gas Pipes		Both Liquid and Gas Pipes	
Piping Connections	Liquid	in. (mm)	ϕ 1/4 (ϕ 6.4)		ϕ 1/4 (ϕ 6.4)	
	Gas	in. (mm)	ϕ 3/8 (ϕ 9.5)		ϕ 3/8 (ϕ 9.5)	
	Drain	in. (mm)	VP20 (O.D. ϕ 1-1/32 (ϕ 26.0), I.D. ϕ 25/32 (ϕ 20.0))		VP20 (O.D. ϕ 1-1/32 (ϕ 26.0), I.D. ϕ 25/32 (ϕ 20.0))	
Drawing No.			3D075493		3D075494	

Conversion Formulae
kcal/h = kW × 860 Btu/h = kW × 3412 cfm = m³/min × 35.3

60 Hz, 208 - 230 V

Model			CDXS15LVJU		CDXS18LVJU	
			Cooling	Heating	Cooling	Heating
Rated Capacity			15 kBtu/h Class		18 kBtu/h Class	
External Static Pressure		inAq (Pa)	0.16 (40)		0.16 (40)	
Airflow Rate	H	cfm (m^3/min)	424 (12.0)	424 (12.0)	424 (12.0)	424 (12.0)
	M		388 (11.0)	388 (11.0)	388 (11.0)	388 (11.0)
	L		353 (10.0)	353 (10.0)	353 (10.0)	353 (10.0)
	SL		297 (8.4)	297 (8.4)	297 (8.4)	297 (8.4)
Fan	Type		Sirocco Fan		Sirocco Fan	
	Motor Output	W	130		130	
	Speed	Steps	5 Steps, Quiet, Auto		5 Steps, Quiet, Auto	
Air Filter			Removable / Washable / Mildew Proof		Removable / Washable / Mildew Proof	
Running Current (Rated)		A	0.79	0.79	0.79	0.79
Power Consumption (Rated)		W	172	172	172	172
Power Factor (Rated)		%	94.4	94.4	94.4	94.4
Temperature Control			Microcomputer Control		Microcomputer Control	
Dimensions (H × W × D)		in. (mm)	7-7/8 × 35-7/16 × 24-7/16 (200 × 900 × 620)		7-7/8 × 35-7/16 × 24-7/16 (200 × 900 × 620)	
Packaged Dimensions (H × W × D)		in. (mm)	10-1/2 × 43-9/16 × 29-9/16 (266 × 1,106 × 751)		10-1/2 × 43-9/16 × 29-9/16 (266 × 1,106 × 751)	
Weight (Mass)		Lbs (kg)	60 (27)		60 (27)	
Gross Weight (Gross Mass)		Lbs (kg)	75 (34)		75 (34)	
Sound Pressure Level	H / M / L	dB(A)	37 / 35 / 33 / 31	37 / 35 / 33 / 31	37 / 35 / 33 / 31	37 / 35 / 33 / 31
Heat Insulation			Both Liquid and Gas Pipes		Both Liquid and Gas Pipes	
Piping Connections	Liquid	in. (mm)	ϕ 1/4 (ϕ 6.4)		ϕ 1/4 (ϕ 6.4)	
	Gas	in. (mm)	ϕ 1/2 (ϕ 12.7)		ϕ 1/2 (ϕ 12.7)	
	Drain	in. (mm)	VP20 (O.D. ϕ 1-1/32 (ϕ 26.0), I.D. ϕ 25/32 (ϕ 20.0))		VP20 (O.D. ϕ 1-1/32 (ϕ 26.0), I.D. ϕ 25/32 (20.0))	
Drawing No.			C: 3D075721		C: 3D075722	

Conversion Formulae
kcal/h = kW × 860 Btu/h = kW × 3412 cfm = m^3/min × 35.3

2. Outdoor Unit

60 Hz, 208 - 230 V

Model			2MXS18GVJU	
			Cooling	Heating
Casing Color			Ivory White	
Compressor	Type		Hermetically Sealed Swing Type	
	Model		2YC45EXD	
	Motor Output	W	1,380	
Refrigerant Oil	Model		FVC50K	
	Charge	oz (L)	26.5 (0.75)	
Refrigerant	Type		R-410A	
	Charge	Lbs (kg)	5.73 (2.6)	
Airflow Rate	H	m³/min	49	41
	L		43	39
	H	cfm	1,730	1,448
	L		1,518	1,377
Fan	Type		Propeller	
	Motor Output	W	53	
	Running Current	A	H: 0.31 / L: 0.28	H: 0.27 / L: 0.25
	Power Consumption	W	H: 65 / L: 57	H: 55 / L: 52
Starting Current		A	10.6	
Dimension (H × W × D)		in. (mm)	28-15/16 × 32-1/2 × 11-13/16 (735 × 825 × 300)	
Packaged Dimension (H × W × D)		in. (mm)	31-7/16 × 39-5/16 × 15-3/8 (806 × 999 × 390)	
Weight (Mass)		Lbs (kg)	139 (63)	
Gross Weight (Gross Mass)		Lbs (kg)	144 (65)	
Sound Pressure Level		dB(A)	50	51
Piping Connections	Liquid	in. (mm)	ϕ 1/4 × 2 (ϕ 6.4 × 2)	
	Gas	in. (mm)	ϕ 3/8 × 2 (ϕ 9.5 × 2)	
	Drain	in. (mm)	ϕ11/16 (ϕ 18.0)	
Heat Insulation			Both Liquid and Gas Pipes	
No. of Wiring Connection			3 for Power Supply, 4 for Interunit Wiring	
Max. Interunit Piping Length		ft (m)	164 (50) (for Total of Each Room)	
			82 (25) (for One Room)	
Amount of Additional Charge of Refrigerant		oz/ft (g/m)	0.22 (20) (98.4 ft (30 m) or more)	
Max. Installation Height Difference		ft (m)	49.2 (15) (between Indoor Unit and Outdoor Unit)	
			24.6 (7.5) (between Indoor Units)	
Drawing No.			3D058840	

Note:

■ The data are based on the conditions shown in the table below.

Cooling	Heating	Piping Length
Indoor ; 80°FDB (26.7°CDB) / 67°FWB (19.4°CWB) Outdoor ; 95°FDB (35°CDB) / 75°FWB (24°CWB)	Indoor ; 70°FDB (21°CDB) / 60°FWB (15.6°CWB) Outdoor ; 47°FDB (8.3°CDB) / 43°FWB (6°CWB)	25 ft (7.5 m)

Conversion Formulae
kcal/h = kW × 860 Btu/h = kW × 3412 cfm = m³/min × 35.3

60 Hz, 208 - 230 V

Model			3MXS24JVJU	
			Cooling	Heating
Casing Color			Ivory White	
Compressor	Type		Hermetically Sealed Swing Type	
	Model		2YC63EXD	
	Motor Output	W	1,920	
Refrigerant Oil	Model		FVC50K	
	Charge	oz (L)	26.5 (0.75)	
Refrigerant	Type		R-410A	
	Charge	Lbs (kg)	6.61 (3.0)	
Airflow Rate	H	m³/min	58.4	52.1
	M		52.1	52.1
	L		46.5	13.0
	H	cfm	2,062	1,840
	M		1,840	1,840
	L		1,642	459
Fan	Type		Propeller	
	Motor Output	W	66	
	Running Current	A	H: 1.02 / M: 0.87 / L: 0.69	H: 0.87 / M: 0.87 / L: 0.05
	Power Consumption	W	H: 95 / M: 74 / L: 55	H: 74 / M: 74 / L: 9
Starting Current		A	17.8	
Dimension (H × W × D)		in. (mm)	30-5/16 × 35-7/16 × 12-5/8 (770 × 900 × 320)	
Packaged Dimension (H × W × D)		in. (mm)	35-7/8 × 37-11/16 × 15-15/16 (911 × 958 × 405)	
Weight (Mass)		Lbs (kg)	168 (76)	
Gross Weight (Gross Mass)		Lbs (kg)	196 (89)	
Sound Pressure Level		dB(A)	52	54
Piping Connections	Liquid	in. (mm)	ϕ 1/4 × 3 (ϕ 6.4 × 3)	
	Gas	in. (mm)	ϕ 3/8 × 1, ϕ 1/2 × 1, ϕ 5/8 × 1 (ϕ 9.5 × 1, ϕ 12.7 × 1, ϕ 16.0 × 1)	
	Drain	in. (mm)	ϕ 1 (ϕ 25)	
Heat Insulation			Both Liquid and Gas Pipes	
No. of Wiring Connection			3 for Power Supply, 4 for Interunit Wiring	
Max. Interunit Piping Length		ft (m)	230 (70) (for Total of Each Room)	
			82 (25) (for One Room)	
Amount of Additional Charge of Refrigerant		oz/ft (g/m)	0.22 (20) (131.6 ft (40 m) or more)	
Max. Installation Height Difference		ft (m)	49.2 (15) (between Indoor Unit and Outdoor Unit)	
			24.6 (7.5) (between Indoor Units)	
Drawing No.			3D066155	

Note:

■ The data are based on the conditions shown in the table below.

Cooling	Heating	Piping Length
Indoor ; 80°FDB (26.7°CDB) / 67°FWB (19.4°CWB) Outdoor ; 95°FDB (35°CDB) / 75°FWB (24°CWB)	Indoor ; 70°FDB (21°CDB) / 60°FWB (15.6°CWB) Outdoor ; 47°FDB (8.3°CDB) / 43°FWB (6°CWB)	25 ft (7.5 m)

Conversion Formulae
kcal/h = kW × 860 Btu/h = kW × 3412 cfm = m³/min × 35.3

60 Hz, 208 - 230 V

Model			4MXS32GVJU	
			Cooling	Heating
Casing Color			Ivory White	
Compressor	Type		Hermetically Sealed Swing Type	
	Model		2YC63EXD	
	Motor Output	W	1,920	
Refrigerant Oil	Model		FVC50K	
	Charge	oz (L)	26.5 (0.75)	
Refrigerant	Type		R-410A	
	Charge	Lbs (kg)	6.83 (3.1)	
Airflow Rate	H	m³/min	58.4	52.1
	M		52.1	52.1
	L		46.5	13.0
	H	cfm	2,062	1,840
	M		1,840	1,840
	L		1,642	459
Fan	Type		Propeller	
	Motor Output	W	66	
	Running Current	A	H: 1.02 / M: 0.87 / L: 0.69	H: 0.87 / M: 0.87 / L: 0.05
	Power Consumption	W	H: 95 / M: 74 / L: 55	H: 74 / M: 74 / L: 9
Starting Current		A	18.0	
Dimension (H × W × D)		in. (mm)	30-5/16 × 35-7/16 × 12-5/8 (770 × 900 × 320)	
Packaged Dimension (H × W × D)		in. (mm)	35-7/8 × 37-11/16 × 15-15/16 (911 × 958 × 405)	
Weight (Mass)		Lbs (kg)	168 (76)	
Gross Weight (Gross Mass)		Lbs (kg)	196 (89)	
Sound Pressure Level		dB(A)	52	54
Piping Connections	Liquid	in. (mm)	ϕ 1/4 × 4 (ϕ 6.4 × 4)	
	Gas	in. (mm)	ϕ 3/8 × 1, ϕ 1/2 × 1, ϕ 5/8 × 2 (ϕ 9.5 × 1, ϕ 12.7 × 1, ϕ 16.0 × 2)	
	Drain	in. (mm)	ϕ 1 (ϕ 25)	
Heat Insulation			Both Liquid and Gas Pipes	
No. of Wiring Connection			3 for Power Supply, 4 for Interunit Wiring	
Max. Interunit Piping Length		ft (m)	230 (70) (for Total of Each Room)	
			82 (25) (for One Room)	
Amount of Additional Charge of Refrigerant		oz/ft (g/m)	0.22 (20) (131.6 ft (40 m) or more)	
Max. Installation Height Difference		ft (m)	49.2 (15) (between Indoor Unit and Outdoor Unit)	
			24.6 (7.5) (between Indoor Units)	
Drawing No.			3D058873A	

Note:

■ The data are based on the conditions shown in the table below.

Cooling	Heating	Piping Length
Indoor ; 80°FDB (26.7°CDB) / 67°FWB (19.4°CWB) Outdoor ; 95°FDB (35°CDB) / 75°FWB (24°CWB)	Indoor ; 70°FDB (21°CDB) / 60°FWB (15.6°CWB) Outdoor ; 47°FDB (8.3°CDB) / 43°FWB (6°CWB)	25 ft (7.5 m)

Conversion Formulae
kcal/h = kW × 860 Btu/h = kW × 3412 cfm = m³/min × 35.3

Part 3
Printed Circuit Board Connector Wiring Diagram

1. Indoor Unit 17
   1.1 CTXS07JVJU, CTXS09/12HVJU, FTXS15/18HVJU 17
   1.2 CTXS07LVJU, FTXS09/12LVJU 19
   1.3 FTXS15/18LVJU 22
   1.4 FDXS09/12DVJU 25
   1.5 FDXS09/12LVJU, CDXS15/18LVJU 27
2. Outdoor Unit 29
   2.1 2MXS18GVJU 29
   2.2 3MXS24JVJU, 4MXS32GVJU 32

1. Indoor Unit

1.1 CTXS07JVJU, CTXS09/12HVJU, FTXS15/18HVJU

Connectors and Other Parts

PCB (1): Control PCB

1)	S1	Connector for fan motor
2)	S6	Connector for swing motor (horizontal blades)
3)	S8	Connector for swing motor (vertical blades)
4)	S21	Connector for centralized control (HA)
5)	S26	Connector for buzzer PCB
6)	S28	Connector for signal receiver PCB
7)	S32	Connector for indoor heat exchanger thermistor
8)	S35	Connector for INTELLIGENT EYE sensor PCB
9)	H1, H2, H3, FG	Connector for terminal board
10)	JA	Address setting jumper ∗ Refer to page 265 for detail.
11)	JB	Fan speed setting when compressor stops for thermostat OFF
	JC	Power failure recovery function (auto-restart) ∗ Refer to page 266 for detail.
12)	LED A	LED for service monitor (green)
13)	FU1	Fuse (3.15 A, 250 V)
14)	V1	Varistor

PCB (2): Signal Receiver PCB

1)	S29	Connector for control PCB
2)	SW1 (S1W)	Forced operation [ON/OFF] button

PCB (3): Buzzer PCB

1)	S27	Connector for control PCB
2)	S38	Connector for display PCB
3)	RTH1 (R1T)	Room temperature thermistor

PCB (4): Display PCB

1)	S37	Connector for buzzer PCB
2)	LED1 (H1P)	LED for operation (green)
3)	LED2 (H2P)	LED for timer (yellow)
4)	LED3 (H3P)	LED for HOME LEAVE operation (red)

PCB (5): INTELLIGENT EYE Sensor PCB

1)	S36	Connector for control PCB

Caution **Replace the PCB if you accidentally cut the jumpers other than JA, JB, and JC.**
Jumpers are necessary for electronic circuit. Improper operation may occur if you cut any of them.

PCB Detail

PCB (1): Control PCB

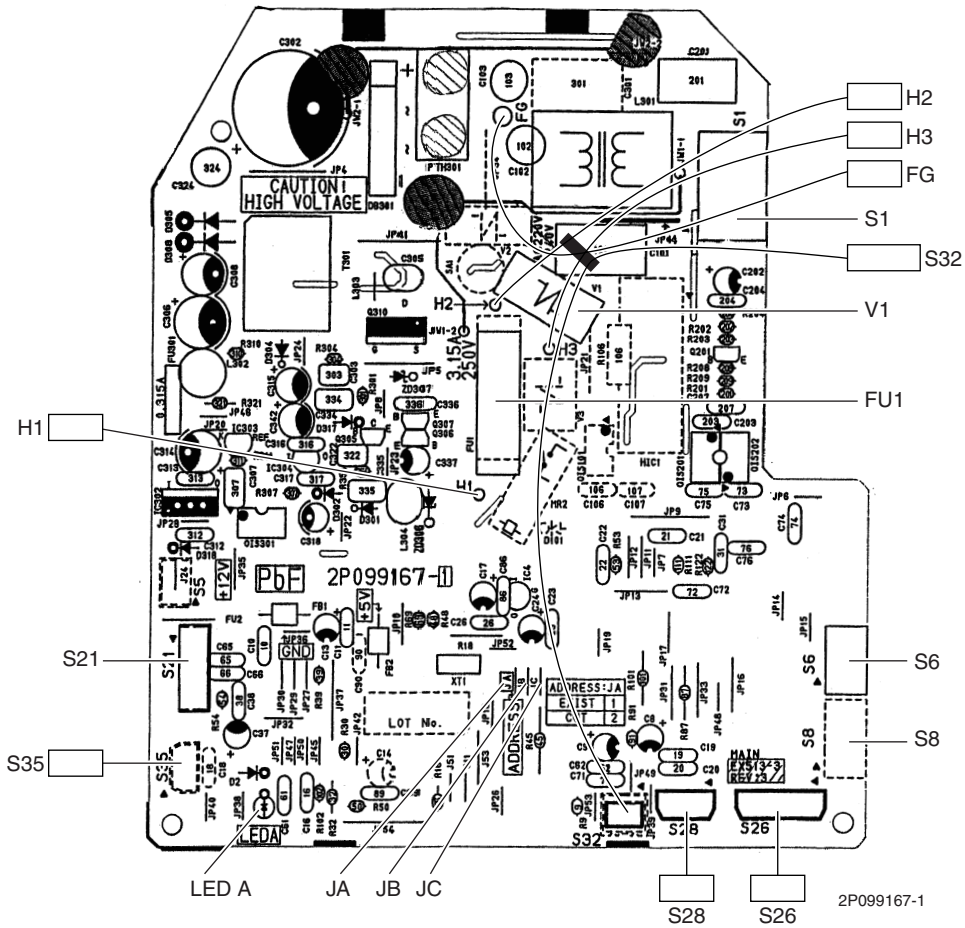

PCB (2): Signal Receiver PCB

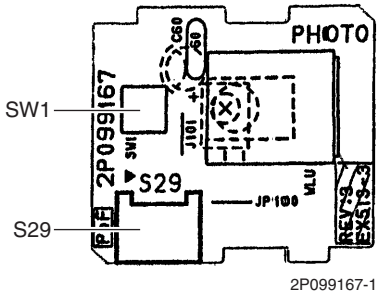

PCB (3): Buzzer PCB

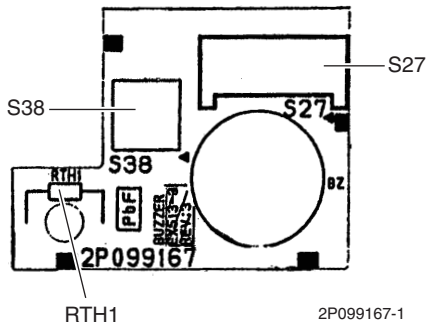

PCB (4): Display PCB

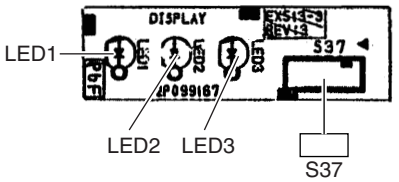

PCB (5): INTELLIGENT EYE Sensor PCB

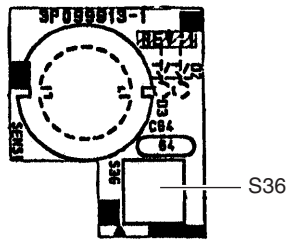

1.2 CTXS07LVJU, FTXS09/12LVJU

Connectors and Other Parts

PCB (1): Control PCB

1)	S1	Connector for DC fan motor
2)	S21	Connector for centralized control (HA)
3)	S25	Connector for INTELLIGENT EYE sensor PCB
4)	S32	Indoor heat exchanger thermistor
5)	S41	Connector for swing motors
6)	S46	Connector for display PCB
7)	S47	Connector for signal receiver PCB
8)	H1, H2, H3, FG	Connector for terminal board
9)	JA	Address setting jumper ∗ Refer to page 265 for detail.
10)	JB	Fan speed setting when compressor stops for thermostat OFF
	JC	Power failure recovery function (auto-restart) ∗ Refer to page 266 for detail.
11)	LED A	LED for service monitor (green)
12)	FU1 (F1U)	Fuse (3.15 A, 250 V)
13)	V1	Varistor

PCB (2): Signal Receiver PCB

1)	S48	Connector for control PCB

PCB (3): Display PCB

1)	S49	Connector for control PCB
2)	SW1	Forced operation [ON/OFF] button
3)	LED1 (H1P)	LED for operation (green)
4)	LED2 (H2P)	LED for timer (yellow)
5)	LED3 (H3P)	LED for INTELLIGENT EYE (green)
6)	RTH1 (R1T)	Room temperature thermistor

PCB (4): INTELLIGENT EYE Sensor PCB

1)	S26	Connector for control PCB

Caution **Replace the PCB if you accidentally cut the jumpers other than JA, JB, and JC.**
Jumpers are necessary for electronic circuit. Improper operation may occur if you cut any of them.

PCB Detail

PCB (1): Control PCB

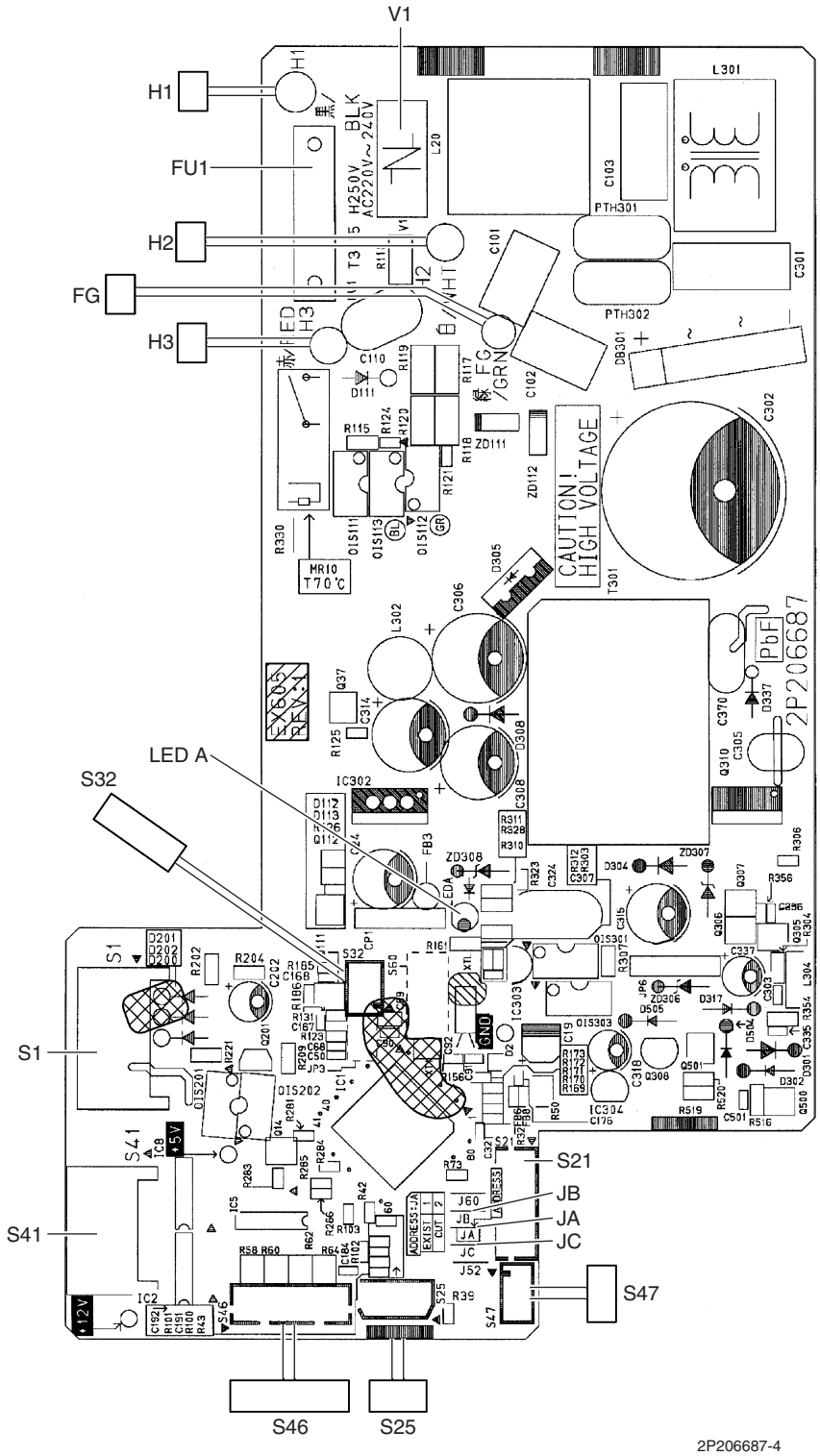

PCB (2): Signal Receiver PCB

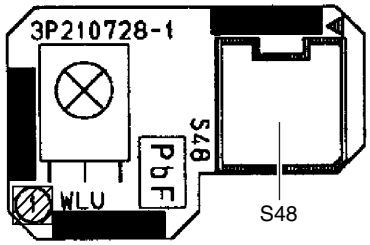

3P210728-1

PCB (3): Display PCB

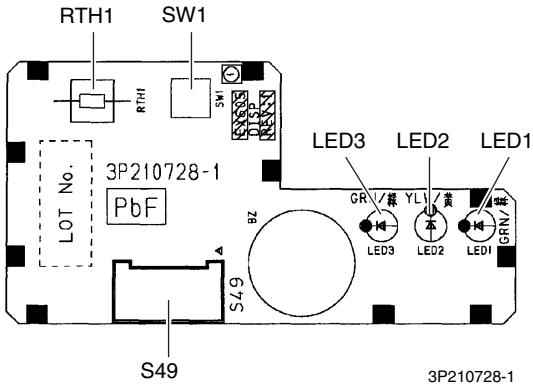

PCB (4): INTELLIGENT EYE Sensor PCB

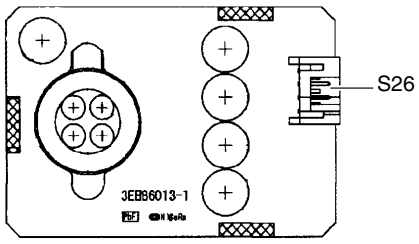

3EB86013-1

1.3 FTXS15/18LVJU

Connectors and Other Parts

PCB (1): Control PCB

1)	S1	Connector for DC fan motor
2)	S21	Connector for centralized control (HA)
3)	S25	Connector for INTELLIGENT EYE sensor PCB
4)	S32	Indoor heat exchanger thermistor
5)	S41	Connector for swing motors
6)	S46	Connector for display PCB
7)	S47	Connector for signal receiver PCB
8)	H1, H2, H3, FG	Connector for terminal board
9)	JA	Address setting jumper ∗ Refer to page 265 for detail.
10)	JB	Fan speed setting when compressor stops for thermostat OFF
	JC	Power failure recovery function (auto-restart) ∗ Refer to page 266 for detail.
11)	LED A	LED for service monitor (green)
12)	FU1 (F1U)	Fuse (3.15 A, 250 V)
13)	V1	Varistor

PCB (2): Signal Receiver PCB

1)	S48	Connector for control PCB

PCB (3): Display PCB

1)	S49	Connector for control PCB
2)	SW1	Forced operation ON/OFF button
3)	LED1 (H1P)	LED for operation (green)
4)	LED2 (H2P)	LED for timer (yellow)
5)	LED3 (H3P)	LED for INTELLIGENT EYE (green)
6)	RTH1 (R1T)	Room temperature thermistor

PCB (4): INTELLIGENT EYE Sensor PCB

1)	S36	Connector for control PCB

Caution **Replace the PCB if you accidentally cut the jumpers other than JA, JB, and JC.**
Jumpers are necessary for electronic circuit. Improper operation may occur if you cut any of them.

PCB Detail

PCB (1): Control PCB

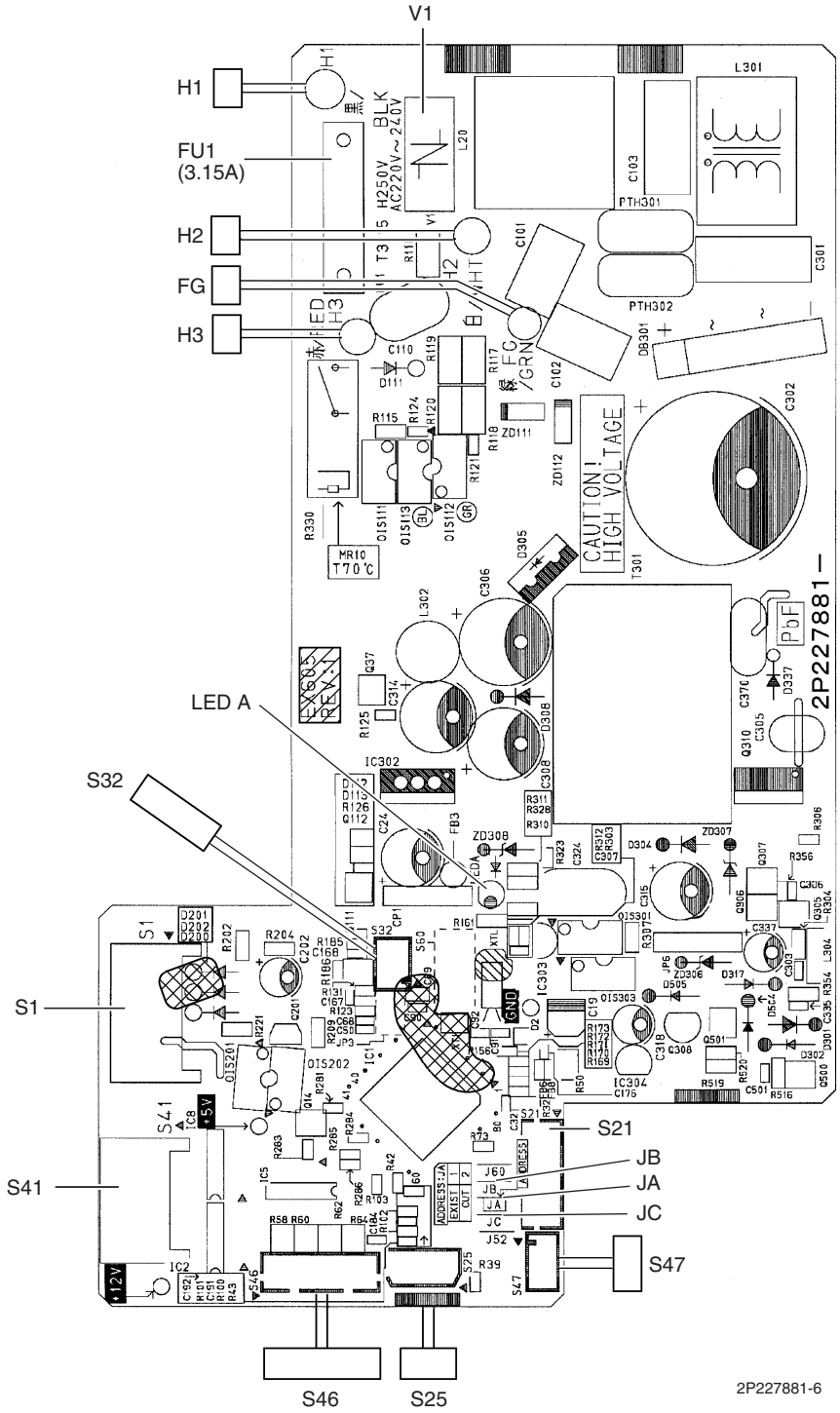

PCB (2): Signal Receiver PCB

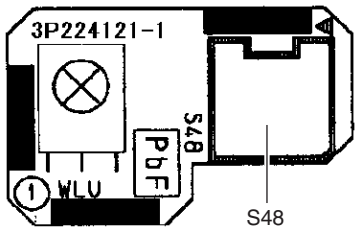

3P224121-1

PCB (3): Display PCB

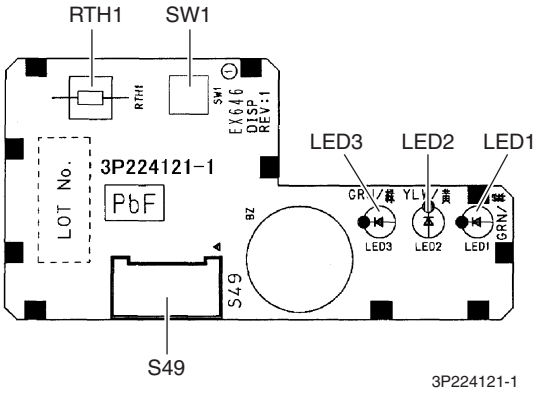

3P224121-1

PCB (4): INTELLIGENT EYE Sensor PCB

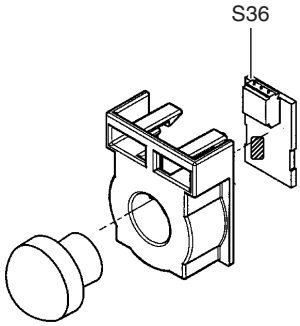

3P227885-1

1.4 FDXS09/12DVJU

Connectors and Other Parts

PCB (1): Control PCB

1)	S1	Connector for fan motor
2)	S7	Connector for fan motor (Hall IC)
3)	S21	Connector for centralized control (HA)
4)	S26	Connector for display PCB
5)	S32	Connector for indoor heat exchanger thermistor
6)	H1, H2, H3	Connector for terminal board
7)	GND	Connector for terminal board (ground)
8)	JA	Address setting jumper ∗ Refer to page 265 for detail.
9)	JB	Fan speed setting when compressor stops for thermostat OFF
	JC	Power failure recovery function (auto-restart) ∗ Refer to page 266 for detail.
10)	LED A	LED for service monitor (green)
11)	FU1 (F1U)	Fuse (3.15 A, 250 V)
12)	V1 (V1TR)	Varistor

PCB (2): Display PCB

1)	S1	Connector for control PCB
2)	SW1 (S1W)	Forced operation [ON/OFF] button
3)	LED1 (H1P)	LED for HOME LEAVE operation (red)
4)	LED2 (H2P)	LED for timer (yellow)
5)	LED3 (H3P)	LED for operation (green)
6)	RTH1 (R1T)	Room temperature thermistor

Caution **Replace the PCB if you accidentally cut the jumpers other than JA, JB, and JC.**
Jumpers are necessary for electronic circuit. Improper operation may occur if you cut any of them.

PCB Detail

PCB (1): Control PCB

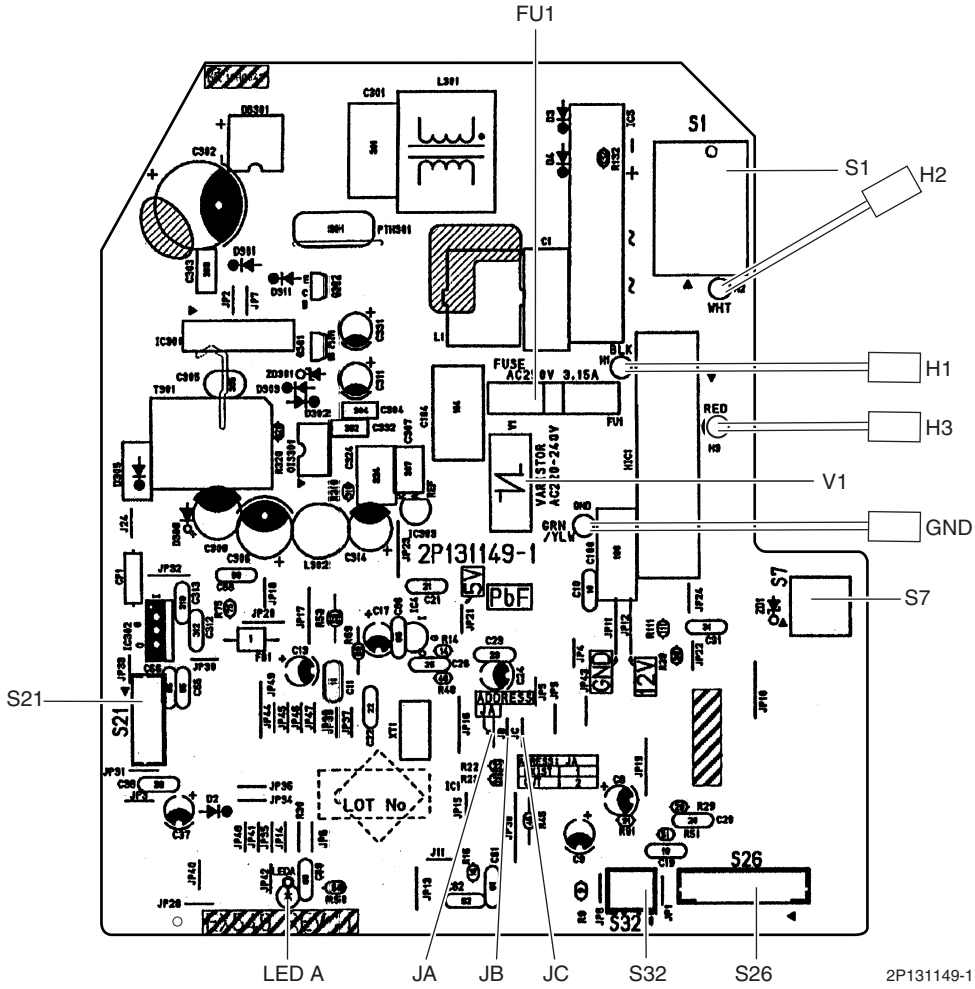

PCB (2): Display PCB

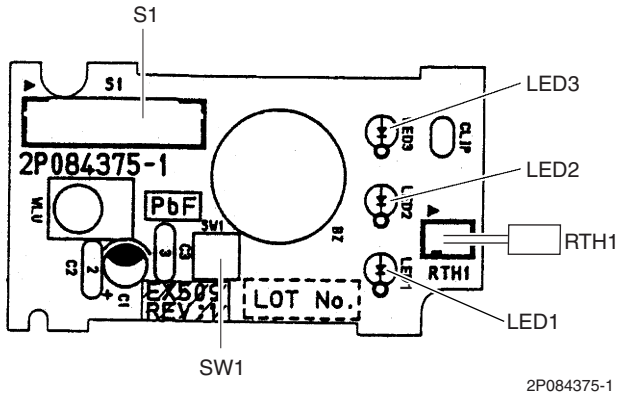

1.5 FDXS09/12LVJU, CDXS15/18LVJU

Connectors and Other Parts

A1P: Control PCB

1)	S1	Connector for AC fan motor
2)	S7	Connector for AC fan motor (Hall IC)
3)	S21	Connector for centralized control (HA)
4)	S26	Connector for display PCB
5)	S32	Connector for indoor heat exchanger thermistor
6)	H1, H2, H3	Connector for terminal board
7)	FG (GND)	Connector for terminal board (ground)
8)	JA	Address setting jumper ∗ Refer to page 265 for detail.
9)	JB	Fan speed setting when compressor stops for thermostat OFF
	JC	Power failure recovery function (auto-restart) ∗ Refer to page 266 for detail.
10)	LED A	LED for service monitor (green)
11)	FU1 (F1U)	Fuse (3.15 A, 250 V)
12)	V1 (V1TR)	Varistor

A2P: Display PCB

1)	S1	Connector for control PCB
2)	SW1 (S1W)	Forced operation [ON/OFF] button
3)	LED2 (H2P)	LED for timer (yellow)
4)	LED3 (H3P)	LED for operation (green)
5)	RTH1 (R1T)	Room temperature thermistor

Caution **Replace the PCB if you accidentally cut the jumpers other than JA, JB, and JC.**
Jumpers are necessary for electronic circuit. Improper operation may occur if you cut any of them.

PCB Detail

A1P: Control PCB

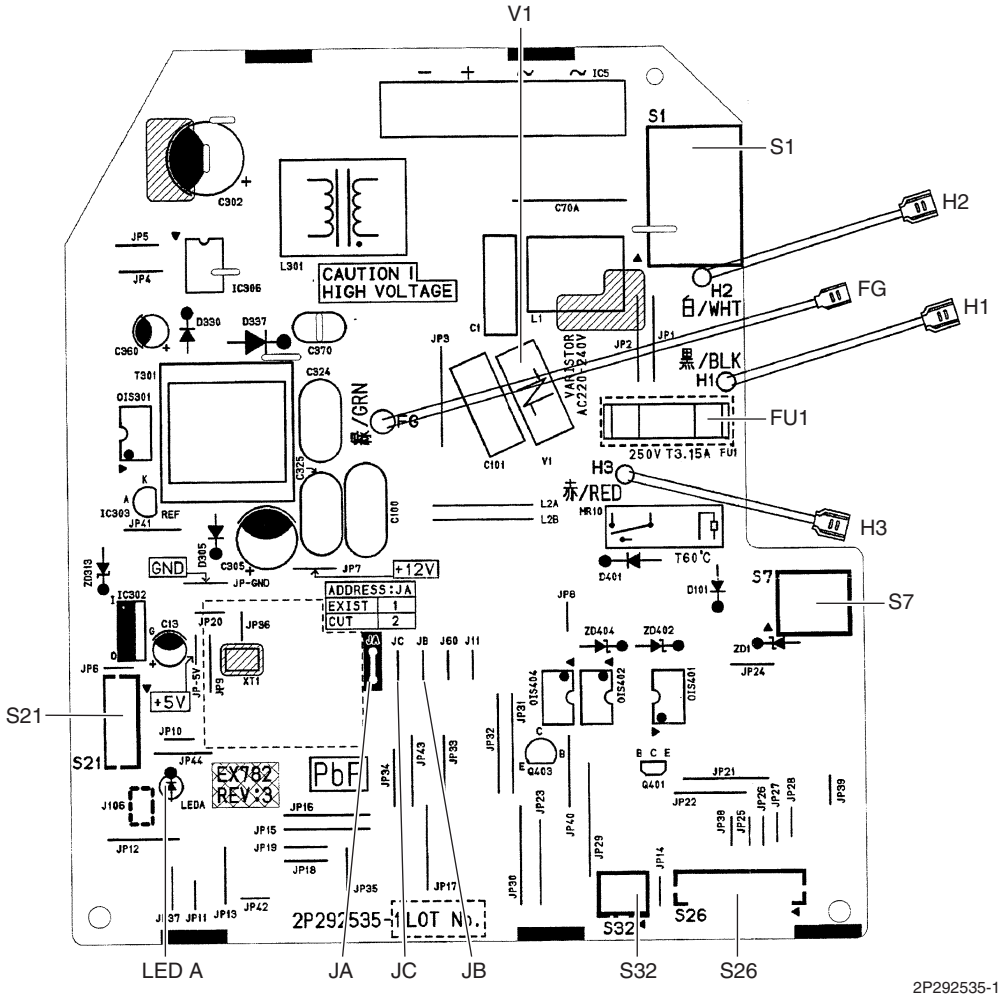

A2P: Display PCB

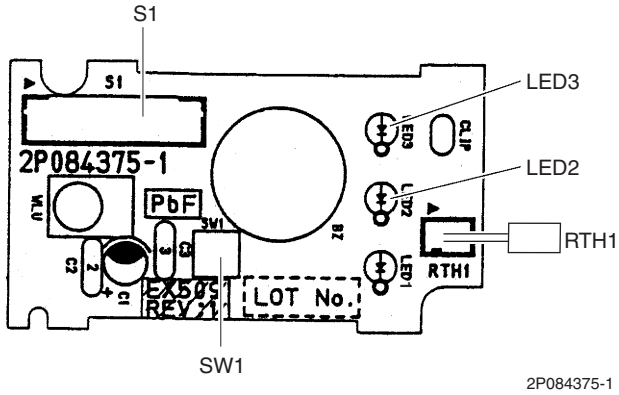

★LED 1 does not function.

2. Outdoor Unit

2.1 2MXS18GVJU

Connectors and Other Parts

Main PCB

1)	S10	Connector for MID1 (indoor - outdoor transmission)
2)	S15	Connector for COOL / HEAT mode lock ∗ Refer to page 262 for detail.
3)	S20 (white)	Connector for electronic expansion valve coil A port
4)	S21 (red)	Connector for electronic expansion valve coil B port
5)	S31, S32	Connector for SPM
6)	S33, S71	Connector for MID2 (inverter PCB)
7)	S40	Connector for overload protector
8)	S51, S101	Connector for service monitor PCB
9)	S80	Connector for four-way valve coil, defrost solenoid valve coil
10)	S90	Connector for thermistors (outdoor temperature, outdoor heat exchanger, discharge pipe)
11)	S91	Connector for fin thermistor
12)	S92	Connector for gas pipe thermistor
13)	S93	Connector for liquid pipe thermistor
14)	AC1, AC2	Connector for MID1 (power supply)
15)	E	Connector for ground
16)	H1, H2	Connector for diode bridge
17)	FU2	Fuse (3.15 A, 250 V)
18)	V2, V5	Varistor

Service Monitor PCB

1)	S52, S102	Connector for main PCB
2)	LED A (H1P)	LED for service monitor (green)
3)	LED1 - LED4 (H2P - H5P)	LED for service monitor (red)
4)	SW1 (S1W)	Forced operation [ON/OFF] switch ∗ Refer to page 256 for detail.
5)	SW2 (S2W)	Operation mode switch ∗ Refer to page 256 for detail.
6)	SW3 (S3W)	Wiring error check switch ∗ Refer to page 257 for detail.
7)	SW4 (S4W)	Priority room setting switch ∗ Refer to page 261 for detail.
8)	SW5 (S5W)	NIGHT QUIET mode setting switch ∗ Refer to page 263 for detail.

MID1

1)	S11, HL, HN	Connector for main PCB
2)	HE	Connector for ground
3)	FU1	Fuse (30 A, 250 V)
4)	V3	Varistor

MID2 (Inverter PCB)

1) S34, S72	Connector for main PCB
2) S70	Connector for outdoor fan motor
3) FU201	Fuse (3.15 A, 250 V)
4) W, V, U, N	Connector for compressor

SPM

1) CN11, CN14	Connector for main PCB
2) L1, L2	Connector for reactor

PCB Detail

Main PCB

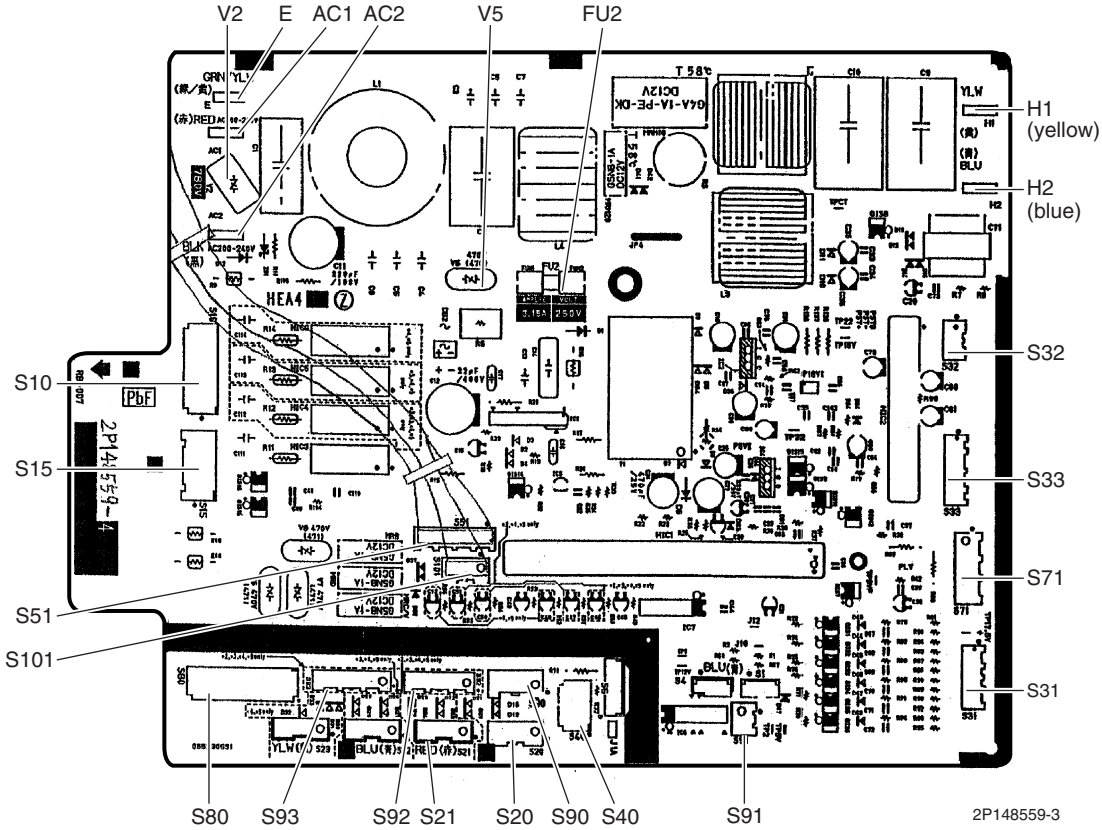

Service Monitor PCB

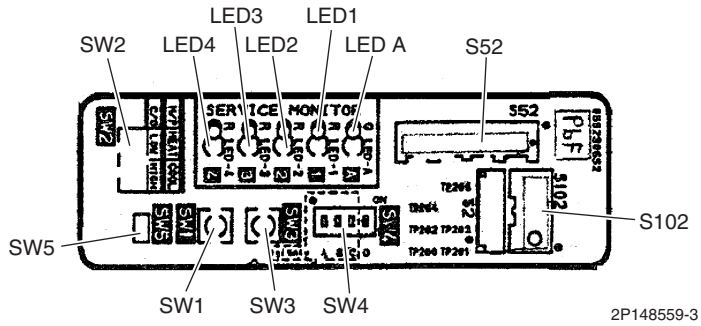

MID1

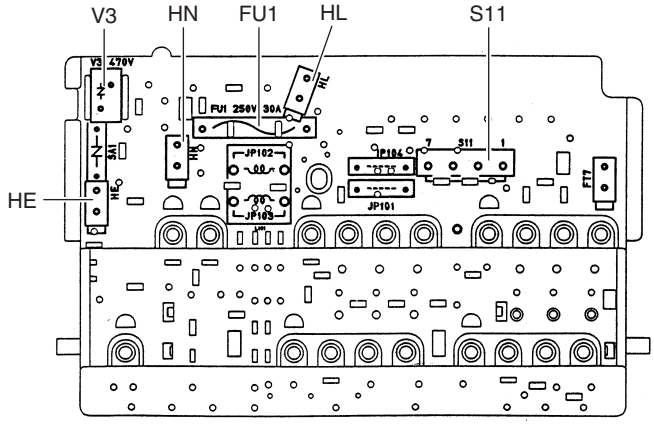

3P080081-2

MID2 (Inverter PCB)

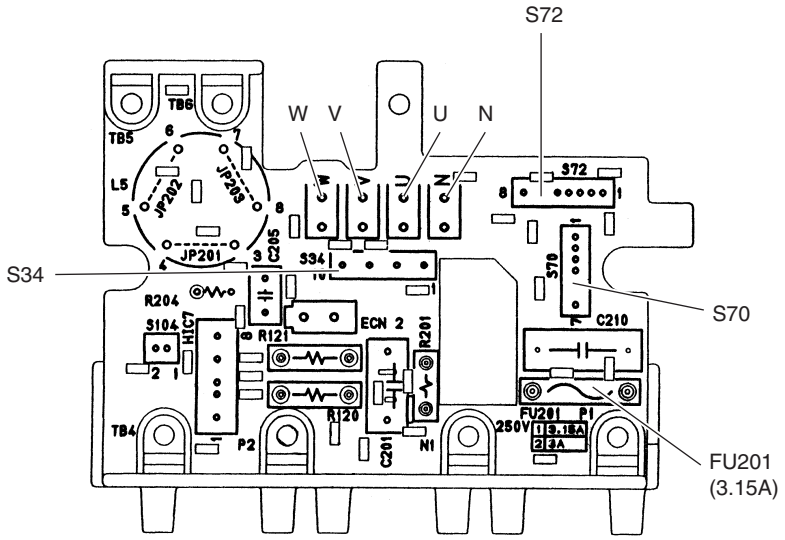

3P080085-1

SPM

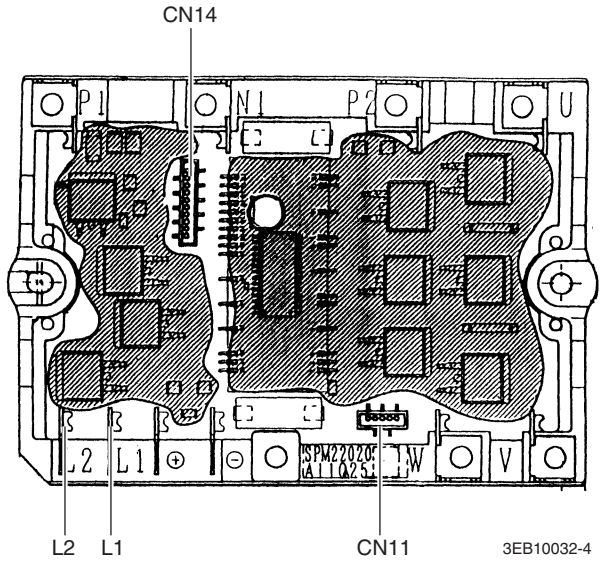

3EB10032-4

2.2 3MXS24JVJU, 4MXS32GVJU

Connectors and Other Parts

PCB (1): Main PCB

1)	S10	Connector for terminal board (indoor - outdoor transmission)
2)	S15	Connector for COOL / HEAT mode lock ∗ Refer to page 262 for detail.
3)	S20 (white)	Connector for electronic expansion valve coil A port
4)	S21 (red)	Connector for electronic expansion valve coil B port
5)	S22 (blue)	Connector for electronic expansion valve coil C port
6)	S23 (yellow)	Connector for electronic expansion valve coil D port (32 class)
7)	S40	Connector for overload protector
8)	S51, S101	Connector for service monitor PCB
9)	S70	Connector for outdoor fan motor
10)	S80	Connector for four way valve coil
11)	S90	Connector for thermistors (outdoor temperature, outdoor heat exchanger, discharge pipe)
12)	S92	Connector for gas pipe thermistor
13)	S93	Connector for liquid pipe thermistor
14)	AC1, AC2	Connector for terminal board (power supply)
15)	HR1, HR2	Connector for reactor
16)	E1, E2	Connector for ground
17)	U, V, W	Connector for compressor
18)	FU1	Fuse (30 A, 250 V)
19)	FU2, FU3	Fuse (3.15 A, 250 V)
20)	V2, V3, V5, V9, V100	Varistor

PCB (2): Service Monitor PCB

1)	S52, S102	Connector for main PCB
2)	LED A	LED for service monitor (green)
3)	LED1 - LED4	LED for service monitor (red)
4)	SW1	Forced operation [ON/OFF] switch ∗ Refer to page 256 for detail.
5)	SW2	Operation mode switch ∗ Refer to page 256 for detail.
6)	SW3	Wiring error check switch ∗ Refer to page 257 for detail.
7)	SW4	Priority room setting switch ∗ Refer to page 261 for detail.
8)	SW5	NIGHT QUIET mode setting switch ∗ Refer to page 263 for detail.

PCB Detail

PCB (1): Main PCB

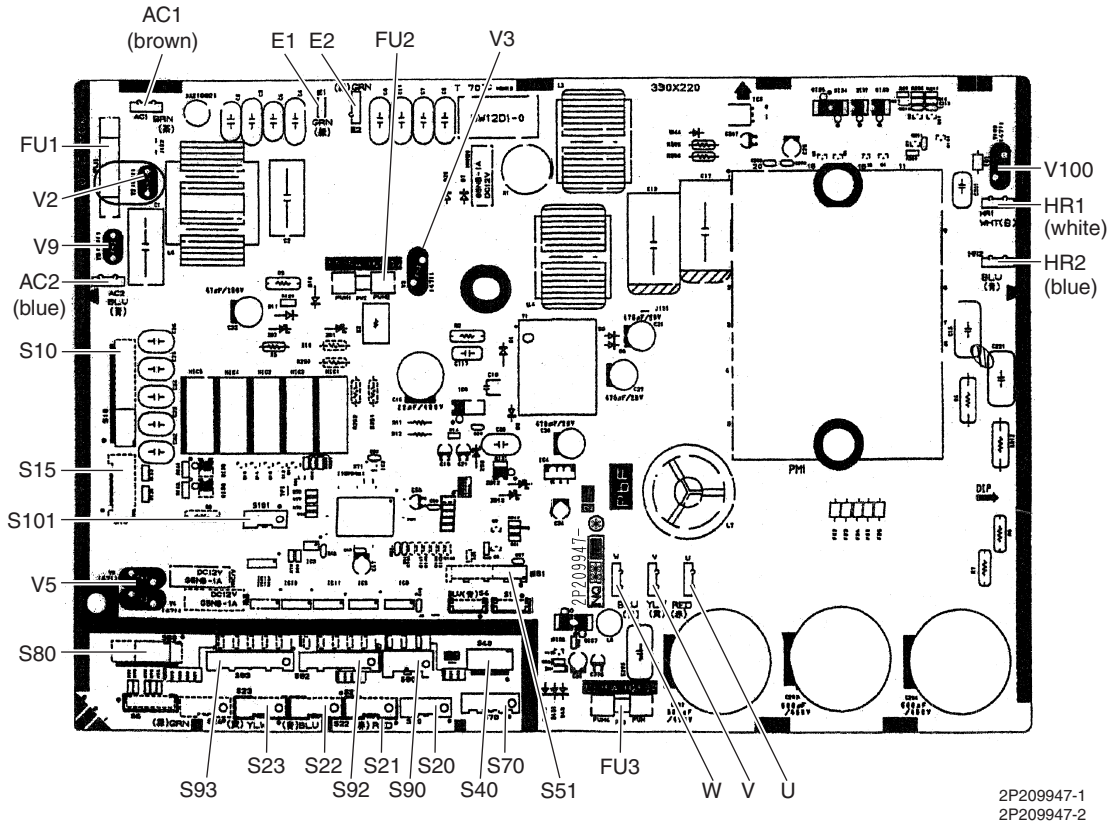

PCB (2): Service Monitor PCB

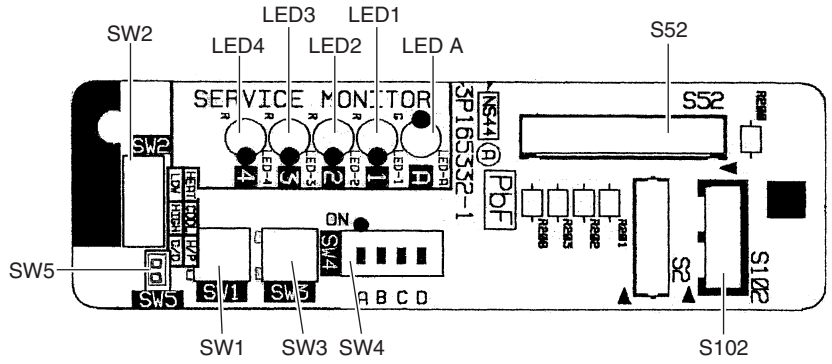

3P165332-1

Part 4
Function and Control

1. Main Functions 35
1.1 Temperature Control 35
1.2 Frequency Principle 35
1.3 Airflow Direction Control (CTXS/FTXS Series) 37
1.4 Fan Speed Control for Indoor Unit 39
1.5 Program Dry Operation 40
1.6 Automatic Operation 41
1.7 Thermostat Control 42
1.8 NIGHT SET Mode 44
1.9 ECONO Operation 45
1.10 HOME LEAVE Operation 46
1.11 INTELLIGENT EYE Operation (CTXS/FTXS Series) 47
1.12 Inverter POWERFUL Operation 48
1.13 Other Functions 49
2. Function of Thermistor 51
3. Control Specification 54
3.1 Mode Hierarchy 54
3.2 Frequency Control 55
3.3 Controls at Mode Changing / Start-up 57
3.4 Discharge Pipe Temperature Control 58
3.5 Input Current Control 59
3.6 Freeze-up Protection Control 59
3.7 Heating Peak-cut Control 60
3.8 Outdoor Fan Control 61
3.9 Liquid Compression Protection Function 61
3.10 Defrost Control 62
3.11 Low Hz High Pressure Limit 63
3.12 Outdoor Electronic Expansion Valve Control 63
3.13 Malfunctions 68

1. Main Functions

1.1 Temperature Control

Definitions of Temperatures

The definitions of temperatures are classified as following.

- Room temperature: temperature of lower part of the room
- Set temperature: temperature set by remote controller
- Room thermistor temperature: temperature detected by room temperature thermistor
- Target temperature: temperature determined by microcomputer

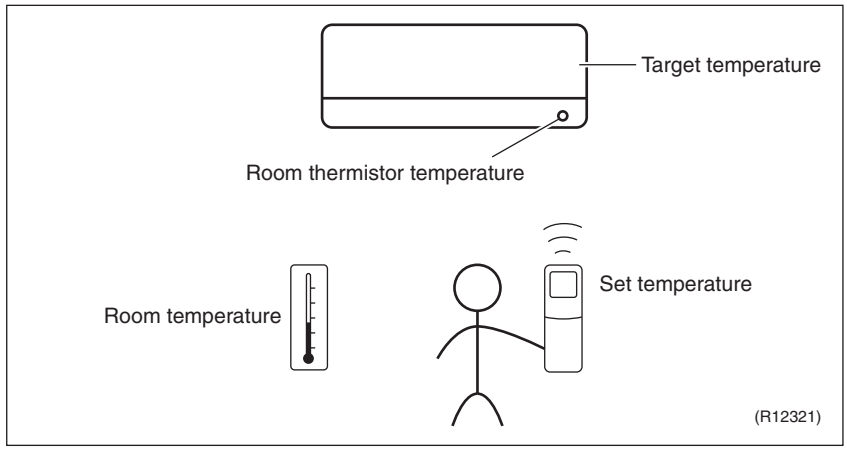

★ The illustration is for CTXS/FTXS series as representative.

Temperature Control

The temperature of the room is detected by the room temperature thermistor. However, there is difference between the “temperature detected by room temperature thermistor” and the “temperature of lower part of the room”, depending on the type of the indoor unit or installation condition. Practically, the temperature control is done by the “target temperature appropriately adjusted for the indoor unit” and the “temperature detected by room temperature thermistor”.

1.2 Frequency Principle

Main Control Parameters

The frequency of the compressor is controlled by the following 2 parameters:

- The load condition of the operating indoor unit
- The difference between the room thermistor temperature and the target temperature

Additional Control Parameters

The target frequency is adapted by additional parameters in the following cases:

- Frequency restrictions
- Initial settings
- Forced cooling operation

Inverter Principle

To regulate the capacity, a frequency control is needed. The inverter makes it possible to alter the rotation speed of the compressor. The following table explains the conversion principle:

Phase	Description
1	The supplied AC power source is converted into the DC power source for the present.
2	The DC power source is reconverted into the three phase AC power source with variable frequency. ■ When the frequency increases, the rotation speed of the compressor increases resulting in an increased refrigerant circulation. This leads to a higher amount of the heat exchange per unit. ■ When the frequency decreases, the rotation speed of the compressor decreases resulting in a decreased refrigerant circulation. This leads to a lower amount of the heat exchange per unit.

Drawing of Inverter

The following drawing shows a schematic view of the inverter principle:

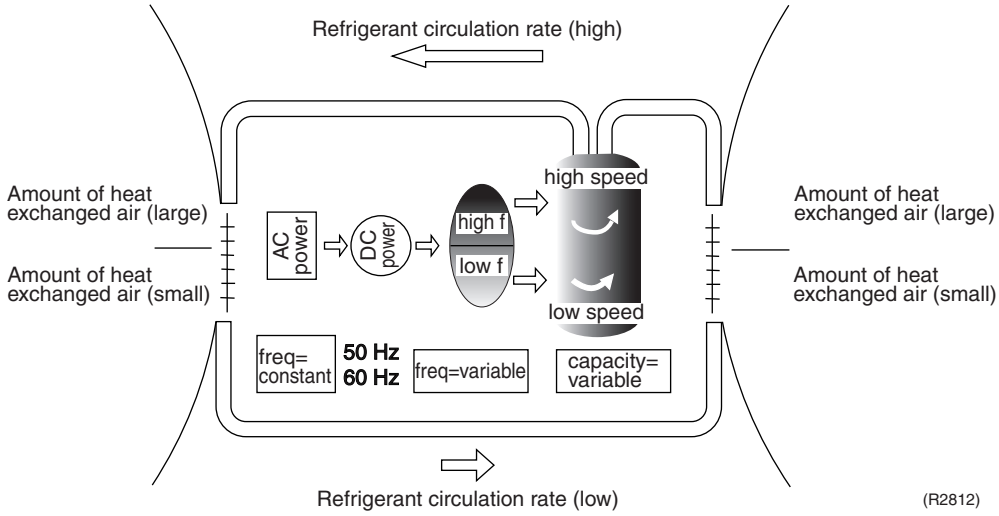

Inverter Features

The inverter provides the following features:

- The regulating capacity can be changed according to the changes in the outdoor temperature and cooling / heating load.
- Quick heating and quick cooling
  The compressor rotational speed is increased when starting the heating (or cooling). This enables reaching the set temperature quickly.
- Even during extremely cold weather, high capacity is achieved. It is maintained even when the outdoor temperature is 35.6°F (2°C).
- Comfortable air conditioning
  A fine adjustment is integrated to keep the room temperature constant.
- Energy saving heating and cooling
  Once the set temperature is reached, the energy saving operation activates to maintain the room temperature at low power.

Frequency Limits

The following functions regulate the minimum and maximum frequency:

Frequency	Functions
Low	■ Four-way valve operation compensation. Refer to page 57.
High	■ Compressor protection function. Refer to page 58. ■ Discharge pipe temperature control. Refer to page 58. ■ Input current control. Refer to page 59. ■ Freeze-up protection control. Refer to page 59. ■ Heating peak-cut control. Refer to page 60. ■ Defrost control. Refer to page 62.

Forced Operation

Refer to page 256 for detail.

1.3 Airflow Direction Control (CTXS/FTXS Series)

Power-Airflow Dual Louvers

The large louver sends a large volume of air downward to the floor and provides an optimum control in cooling, dry, and heating operation.

<Cooling / Dry>
During cooling or dry operation, the louver retracts into the indoor unit. Then, cool air can be blown far and distributed all over the room.

<Heating>
During heating operation, the large louver directs airflow downward to spread the warm air to the entire room.

Wide-Angle Fins

The fins, made of elastic synthetic resin, provide a wide range of airflow that guarantees comfortable air distribution.

Auto-Swing

The following table explains the auto swing process for cooling, dry, heating, and fan:
CTXS07JVJU, CTXS09/12HVJU, FTXS15/18HVJU

Vertical Swing (up and down)				Horizontal Swing (right and left)
Cooling	Dry	Heating	Fan	
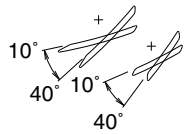	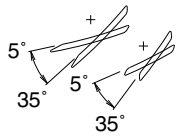	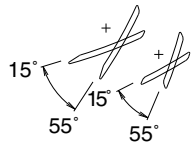	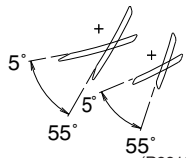	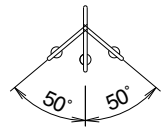

CTXS07LVJU, FTXS09/12LVJU

Vertical Swing (up and down)			Horizontal Swing (right and left)
Cooling / Dry	Heating	Fan	
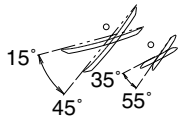	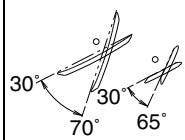	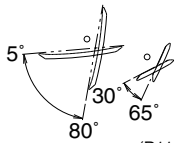	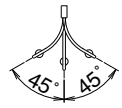

FTXS15/18LVJU

Vertical Swing (up and down)			Horizontal Swing (right and left)
Cooling / Dry	Heating	Fan	
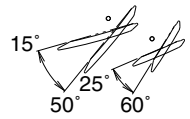 (R9303)	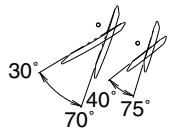 (R9304)	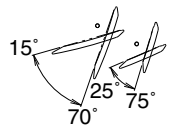 (R9305)	(R9306)

3-D Airflow

Alternative repetition of vertical and horizontal swing motions enables uniform air-conditioning of the entire room. This function is effective for starting the air conditioner.

When the horizontal swing and vertical swing are both set to automatic operation, the airflow becomes 3-D airflow. The horizontal and vertical swing motion is altered and the airflow direction changes in the order shown in the following diagram.

(1) The vertical blades (fins) move from the right to the left.
(2) The horizontal blades (louvers) move downward.
(3) The vertical blades (fins) move from the left to the right.
(4) The horizontal blades (louvers) move upward.

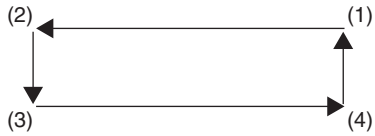

(R13554)

COMFORT AIRFLOW Operation

CTXS/FTXS-L Series

The horizontal blades (louvers) are controlled not to blow the air directly at the people in the room.

	Cooling	Heating
CTXS07LVJU FTXS09/12LVJU	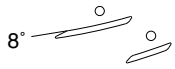 (R4302)	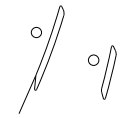 (R8413)
FTXS15/18LVJU	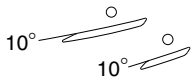 (R9655)	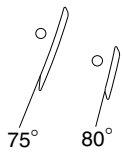 (R9654)

1.4 Fan Speed Control for Indoor Unit

Outline

Phase control and fan speed control contains 9 steps: LLL, LL, SL, L, ML, M, MH, H, and HH. The airflow rate can be automatically controlled depending on the difference between the room thermistor temperature and the target temperature. This is done through phase control and Hall IC control.

For more information about Hall IC, refer to the troubleshooting for fan motor on page 150, 152.

Automatic Fan Speed Control

In automatic fan speed operation, the step “SL” is not available.

	CTXS-J, CTXS/FTXS-H, FDXS-D series		CTXS/FTXS-L, CDXS/FDXS-L series	
Step	**Cooling**	**Heating**	**Cooling**	**Heating**
LLL	⇕ (R6833)	⇕ (R6834)	⇕ (R11681)	⇕ (R6834)
LL				
L				
ML				
M				
MH				
H				
HH (POWERFUL)				

⟺ = The airflow rate is automatically controlled within this range when the FAN setting button is set to automatic.

<Cooling>

The following drawing explains the principle of fan speed control for cooling.

CTXS-J, CTXS/FTXS-H, FDXS-D Series

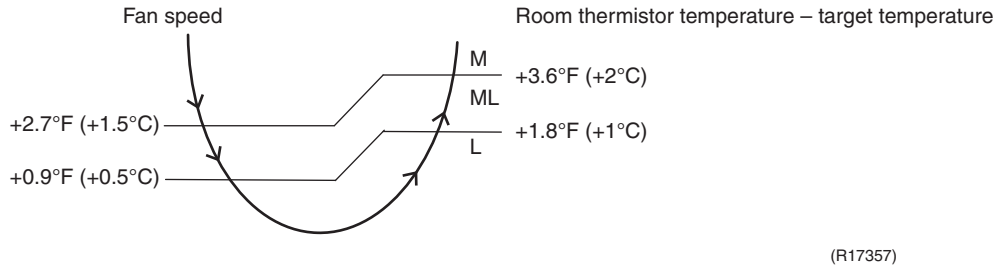

CTXS/FTXS-L, CDXS/FDXS-L Series

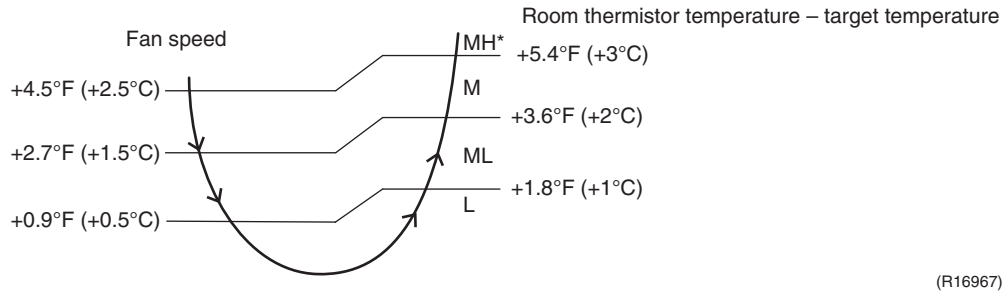

*For CTSX/FTXS-L series, the upper limit is M tap in 30 minutes from the operation start.

<Heating>

In heating operation, the fan speed is regulated according to the indoor heat exchanger temperature and the difference between the room thermistor temperature and the target temperature.

Note:
1. During POWERFUL operation, the fan rotates at H tap + 50 ~ 90 rpm.
2. The fan stops during defrost operation.

COMFORT AIRFLOW Operation

CTXS/FTXS-L Series

- The fan speed is controlled automatically within the following steps.
  <Cooling>
  L tap ~ MH tap (same as AUTOMATIC)
  <Heating>
  ML tap ~ MH tap

- The latest command has the priority between POWERFUL and COMFORT AIRFLOW.

1.5 Program Dry Operation

Outline

Program dry operation removes humidity while preventing the room temperature from lowering. Since the microcomputer controls both the temperature and airflow rate, the temperature adjustment and [FAN] setting buttons are inoperable.

Detail

The microcomputer automatically sets the temperature and airflow rate. The difference between the room thermistor temperature at start-up and the target temperature is divided into two zones. Then, the unit operates in an appropriate capacity for each zone to maintain the temperature and humidity at a comfortable level.

Room thermistor temperature at start-up	Target temperature X	Thermostat OFF point Y	Thermostat ON point Z
(75.2°F (24°C) or more	Room thermistor temperature at start-up	X – 2.5°C (–4.5°F)	X – 0.5°C (– 0.9°F) or Y + 0.5°C (0.9°F) (zone B) continues for 10 min.
23.5°C (74.3°F) ~ 18°C (64.4°F)		X – 2.0°C (–3.6°F)	X – 0.5°C (– 0.9°F) or Y + 0.5°C (0.9°F) (zone B) continues for 10 min.
17.5°C (63.5°F) ~	18°C (64.4°F)	X – 2.0°C (–3.6°F)	X – 0.5°C (– 0.9°F) = 17.5°C (63.5°F) or Y + 0.5°C (0.9°F) (zone B) continues for 10 min.

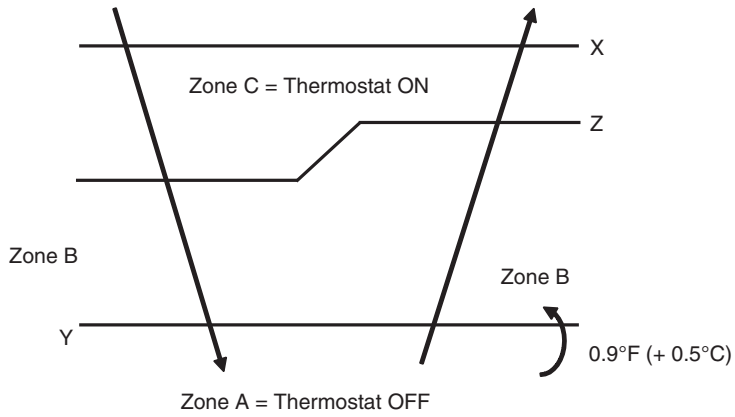

(R11587)

1.6 Automatic Operation

Outline

Automatic Cooling / Heating Function

When the automatic operation is selected with the remote controller, the microcomputer automatically determines the operation mode as cooling or heating according to the room temperature and the set temperature at start-up.

The unit automatically switches the operation mode to maintain the room temperature at the set temperature.

Detail

Ts: set temperature (set by remote controller)
Tt: target temperature (determined by microcomputer)
Tr: room thermistor temperature (detected by room temperature thermistor)
C: correction value

1. The set temperature (Ts) determines the target temperature (Tt).
   (Ts = 64.4 ~ 86°F, 18 ~ 30°C).
2. The target temperature (Tt) is calculated as;
   Tt = Ts + C
   where C is the correction value.
   C = 0°F (0°C)
3. Thermostat ON/OFF point and operation mode switching point are as follows.
   (1) Heating → Cooling switching point:
   Tr ≥ Tt + +5.4°F (3.0°C) (CTXS/FTXS-L series)
   Tr ≥ Tt + +4.5°F (2.5°C) (other models)
   (2) Cooling → Heating switching point:
   Tr < Tt – –4.5°F (2.5°C)
   (3) Thermostat ON/OFF point is the same as the ON/OFF point of cooling or heating operation.
4. During initial operation
   Tr ≥ Ts : Cooling operation
   Tr < Ts : Heating operation

CTXS/FTXS-L series

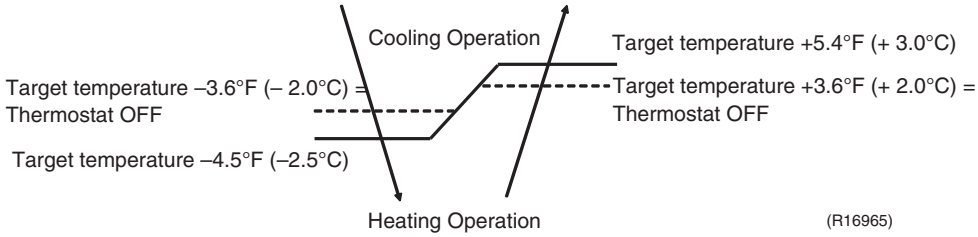

Ex: When the target temperature is 25°C (77°F)
Cooling → 73.4°F (23°C): Thermostat OFF → 71.6°F (22°C): Switch to heating
Heating → 80.6°F (27°C): Thermostat OFF → 82.4°F (28°C): Switch to cooling

Other models

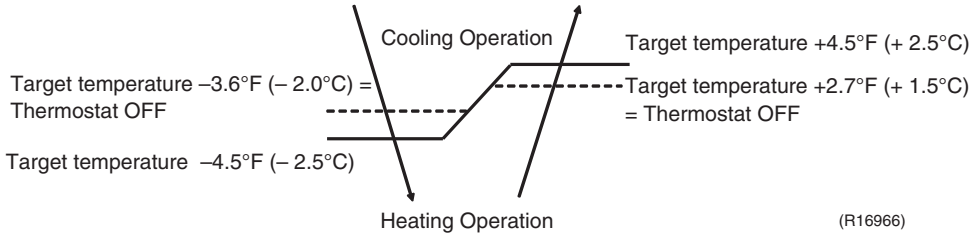

Ex: When the target temperature is 77°F (25°C)
Cooling → 73.4°F (23°C): Thermostat OFF → 71.6°F (22°C): Switch to heating
Heating → 79.7°F (26.5°C): Thermostat OFF → 81.5°F (27.5°C): Switch to cooling

1.7 Thermostat Control

Thermostat control is based on the difference between the room thermistor temperature and the target temperature.

Thermostat OFF Condition

- The temperature difference is in the zone A.

Thermostat ON Condition

- The temperature difference returns to the zone C after being in the zone A.
- The system resumes from defrost control in any zones except A.
- The operation turns on in any zones except A.
- The monitoring time has passed while the temperature difference is in the zone B. (Cooling / Dry: 10 minutes, Heating: 10 seconds)

<Cooling / Dry>
CTXS/FTXS series

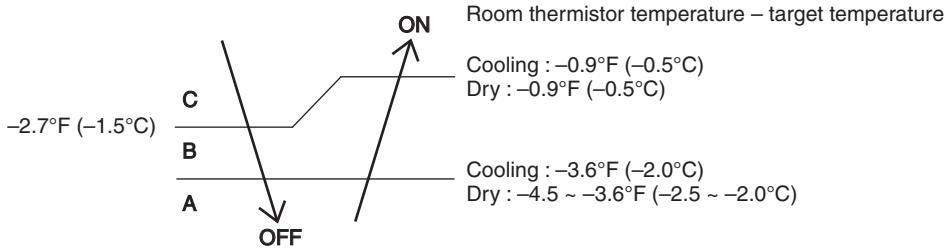

(R14452)

CDXS/FDXS series

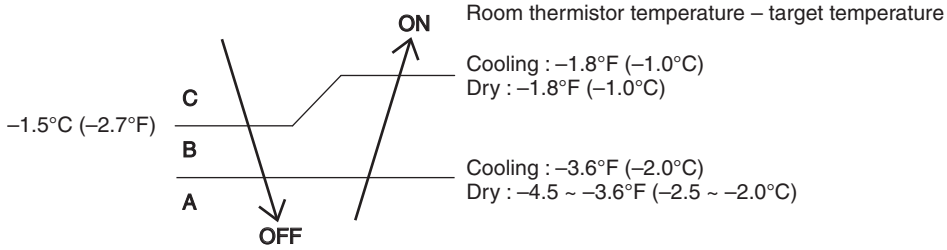

(R16693)

<Heating>
CTXS-J, CTXS/FTXS-H series

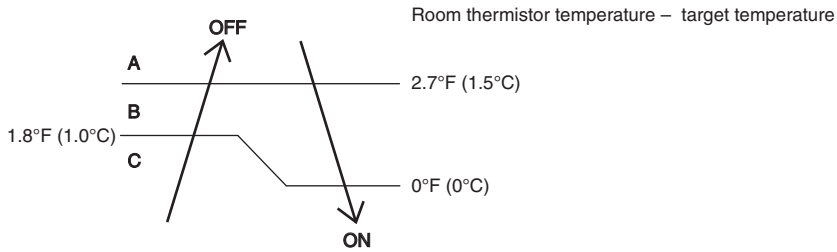

(R12401)

CTXS/FTXS-L series

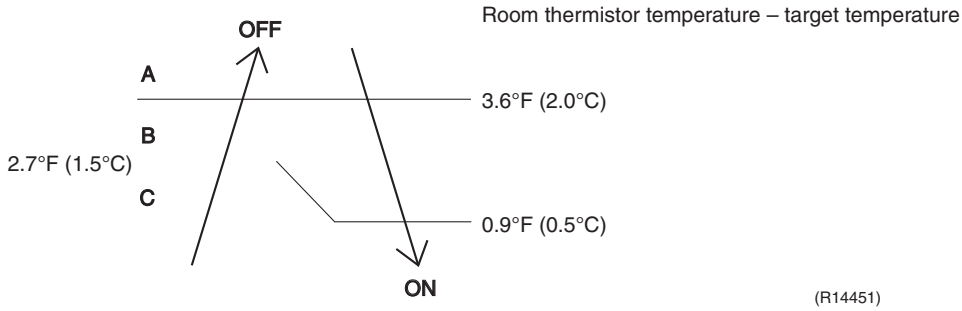

CDXS/FDXS series

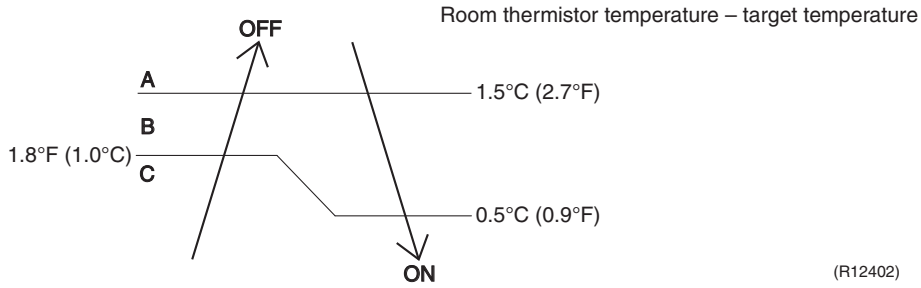

Refer to “Temperature Control” on page 35 for detail.

1.8 NIGHT SET Mode

Outline

When the OFF timer is set, the NIGHT SET Mode is automatically activated. The NIGHT SET Mode keeps the airflow rate setting.

Detail

The NIGHT SET Mode continues operation at the target temperature for the first one hour, then automatically raises the target temperature slightly in the case of cooling, or lowers it slightly in the case of heating. This prevents excessive cooling in summer and excessive heating in winter to ensure comfortable sleeping conditions, and also conserves electricity.

<Cooling>
Ex: CTXS/FTXS Series

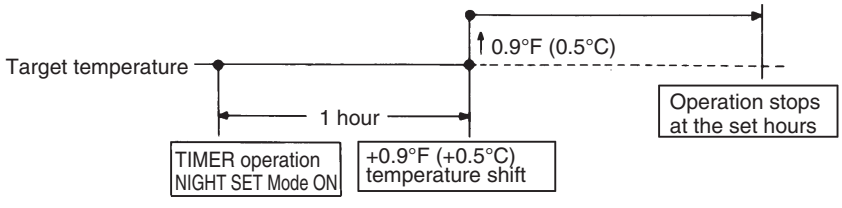

(R14453)

<Heating>

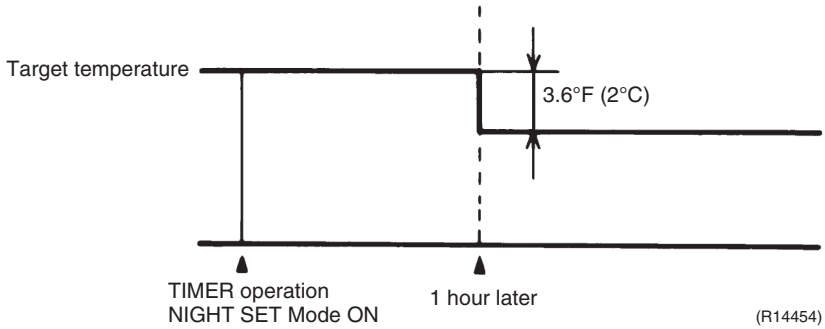

(R14454)

1.9 ECONO Operation

Outline

CTXS/FTXS-L, CDXS/FDXS-L Series

ECONO operation reduces the maximum operating current and the power consumption.
This operation is particularly convenient for energy-saving-oriented users. It is also a major bonus for those whose breaker capacities do not allow the use of multiple electrical devices and air conditioners.
It is easily activated from the wireless remote controller by pushing the [ECONO] button.

- When this function is activated, the maximum capacity also decreases.
- The remote controller can send the ECONO command when the unit is in COOL, HEAT, DRY, or AUTO operation. This function can only be set when the unit is running. Pressing the [ON/OFF] button on the remote controller cancels the function.
- This function and POWERFUL operation cannot be used at the same time. The latest command has the priority.

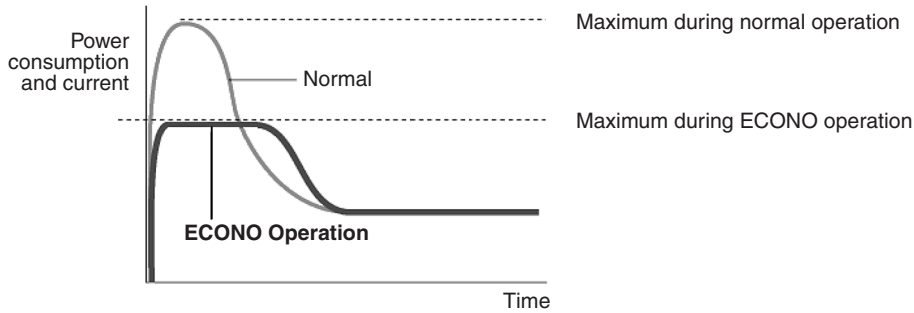

(R9288)

1.10 HOME LEAVE Operation

Outline

FDXS-D Series
HOME LEAVE operation is a function that allows you to record your favorite set temperature and airflow rate. You can start your favorite operation mode simply by pressing the [HOME LEAVE] button on the remote controller.

Detail

1. Start of Function
The function starts when the [HOME LEAVE] button is pressed in cooling mode, heating mode (including POWERFUL operation), or while the operation is stopped. If this button is pressed in POWERFUL operation, the POWERFUL operation is canceled and this function becomes effective.
■ The [HOME LEAVE] button is ineffective in dry mode and fan mode.

2. Details of Function
A mark representing HOME LEAVE is indicated on the display of the remote controller. The indoor unit is operated according to the set temperature and airflow rate for HOME LEAVE which were pre-set in the memory of the remote controller.
The LED (red) of indoor unit representing HOME LEAVE lights up. (It goes out when the operation is stopped.)

3. End of Function
The function ends when the [HOME LEAVE] button is pressed again during HOME LEAVE operation or when the [POWERFUL] button is pressed.

<Cooling>

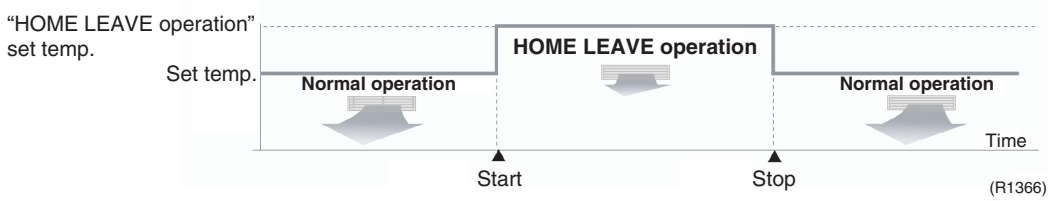

<Heating>

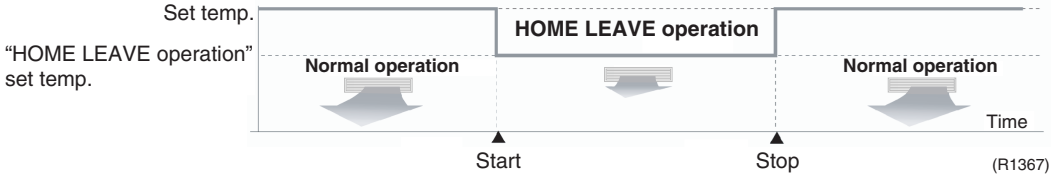

Others

The set temperature and airflow rate are memorized in the remote controller. When the remote controller is reset due to replacement of battery, it is necessary to set the temperature and airflow rate again for HOME LEAVE operation.

1.11 INTELLIGENT EYE Operation (CTXS/FTXS Series)

Outline

This function detects the existence of humans in the room with a motion sensor (INTELLIGENT EYE) and reduces the capacity when there is nobody in the room in order to save electricity.

Detail

1. Detection method by INTELLIGENT EYE

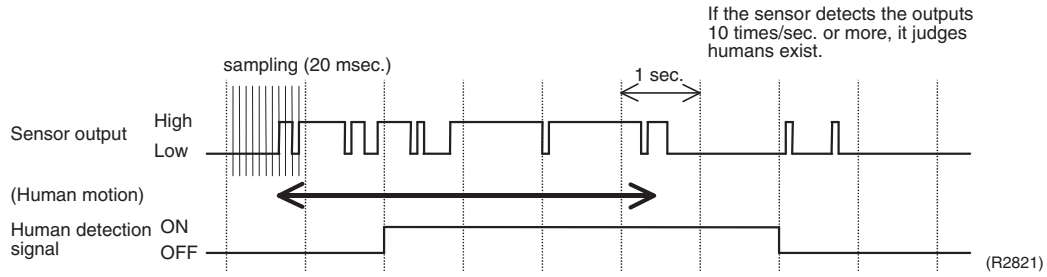

- This sensor detects human motion by receiving infrared rays and displays the pulse wave output.
- The microcomputer in the indoor unit carries out a sampling every 20 msec. and if it detects 10 cycles of the wave in 1 second in total (corresponding to 20 msec. × 10 = 200 msec.), it judges humans are in the room as the motion signal is ON.

2. The motions (for example: in cooling)

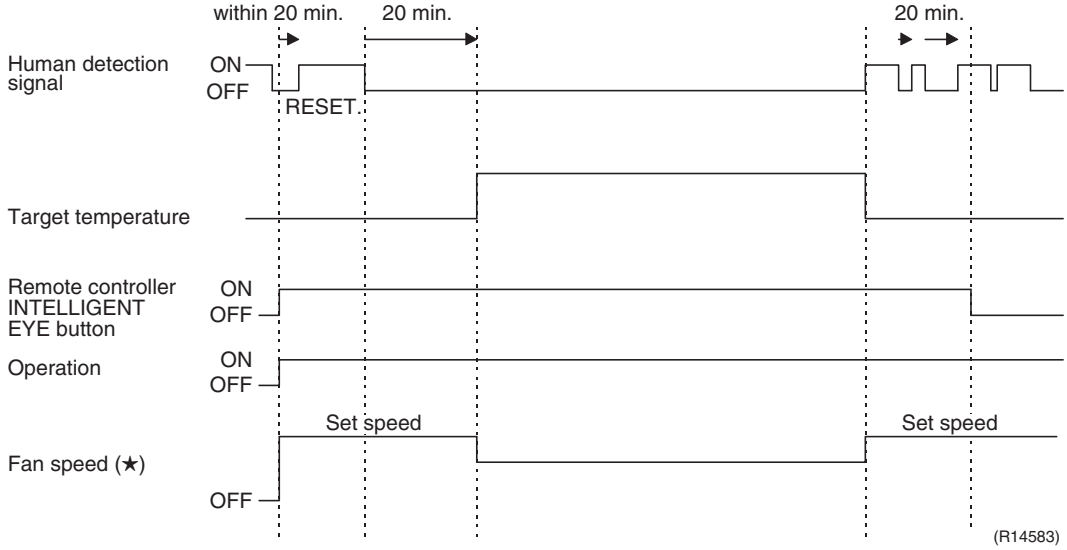

- When the microcomputer does not have a signal from the sensor in 20 minutes, it judges that nobody is in the room and operates the unit at a temperature shifted from the target temperature. (Cooling / Dry: 1.8 ~ 3.6°F (1 ~ 2°C) higher, Heating: 3.6°F (2°C) lower, Auto: according to the operation mode at that time.)

★ In FAN operation, the fan speed is reduced by 50 ~ 60 rpm.

Others

- For dry operation, you cannot set the temperature with a remote controller, but the target temperature is shifted internally.

1.12 Inverter POWERFUL Operation

Outline

In order to exploit the cooling and heating capacity to full extent, operate the air conditioner by increasing the indoor fan rotating speed and the compressor frequency.

Detail

When [POWERFUL] button is pressed, the fan speed and target temperature are converted to the following states for 20 minutes.

Operation mode	Fan speed	Target temperature
COOL	H tap + **A** rpm	64.4°F (18°C)
DRY	Dry rotating speed + **A** rpm	Lowered by 3.6 ~ 4.5°F (2 ~ 2.5°C)
HEAT	H tap + **A** rpm	86 ~ 88.7°F (30 ~ 31.5°C)
FAN	H tap + **A** rpm	—
AUTO	Same as cooling / heating in POWERFUL operation	The target temperature is kept unchanged.

A = 50 ~ 90 rpm

Ex: POWERFUL operation in cooling

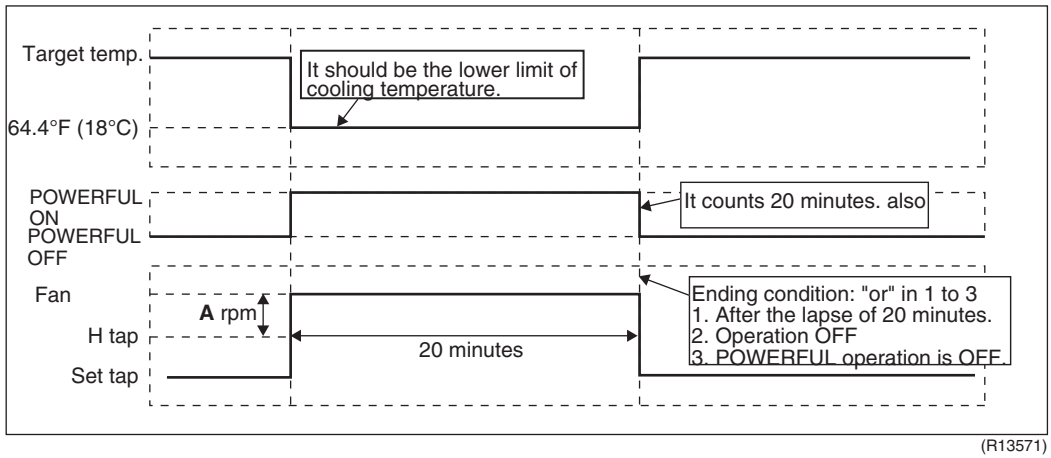

(R13571)

1.13 Other Functions

1.13.1 Hot-Start Function

In order to prevent the cold air blast that normally comes when heating operation is started, the temperature of the indoor heat exchanger is detected, and the airflow is either stopped or made very weak thereby carrying out comfortable heating of the room.
*The cold air blast is also prevented using similar control when the defrosting operation is started or when the thermostat is turned ON.

1.13.2 Signal Receiving Sign

When the indoor unit receives a signal from the remote controller, the unit emits a signal receiving sound.

1.13.3 Indoor Unit [ON/OFF] Button

An [ON/OFF] button is provided on the display of the unit.

- Press the [ON/OFF] button once to start operation. Press once again to stop it.
- The [ON/OFF] button is useful when the remote controller is missing or the battery has run out.
- The operation mode refers to the following table.

Operation mode	Temperature setting	Airflow rate
AUTO	25°C (77°F)	Automatic

- In the case of multi system operation, there are times when the unit does not activate with the [ON/OFF] button.

Ex: CTXS/FTXS-L series

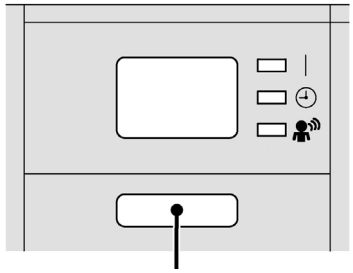

ON/OFF button (R13555)

1.13.4 Air-Purifying Filter with Photocatalytic Deodorizing Function

CTXS-J, CTXS/FTXS-H Series

This filter incorporates the benefits the Air-Purifying Filter and Photocatalytic Deodorizing Filter in a single unit. Combining the two filters in this way increases the active surface area of the new filter. This larger surface area allows the filter to effectively trap microscopic particles, decompose odors and deactivate bacteria and viruses even for the large living rooms. The filter can be used for approximately 3 years if periodic maintenance is performed.

1.13.5 Titanium Apatite Photocatalytic Air-Purifying Filter

CTXS/FTXS-L Series

This filter combines the Air-Purifying Filter and Titanium Apatite Photocatalytic Deodorizing Filter as a single highly effective filter. The filter traps microscopic particles, decomposes odors and even deactivates bacteria and viruses. It lasts for 3 years without replacement if washed about once every 6 months.

1.13.6 Auto-restart Function

If a power failure (including one for just a moment) occurs during the operation, the operation restarts automatically when the power is restored in the same condition as before the power failure.

Note: It takes 3 minutes to restart the operation because the 3-minute standby function is activated.

1.13.7 WEEKLY TIMER Operation

CTXS/FTXS-L Series

Up to 4 timer settings can be saved for each day of the week (up to 28 settings in total).
Those 3 items of “ON/OFF”, “temperature” and “time” can be set.

Refer to page 102 for detail.

2. Function of Thermistor

<2MXS18GVJU>

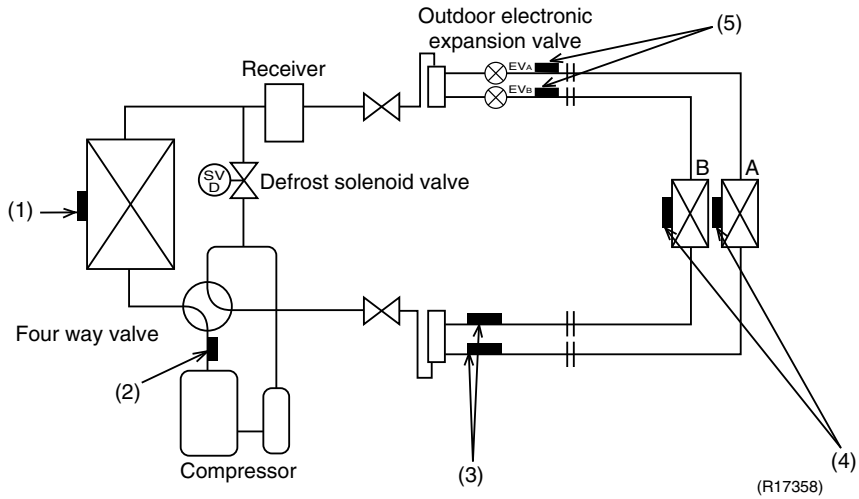

<3MXS24JVJU>

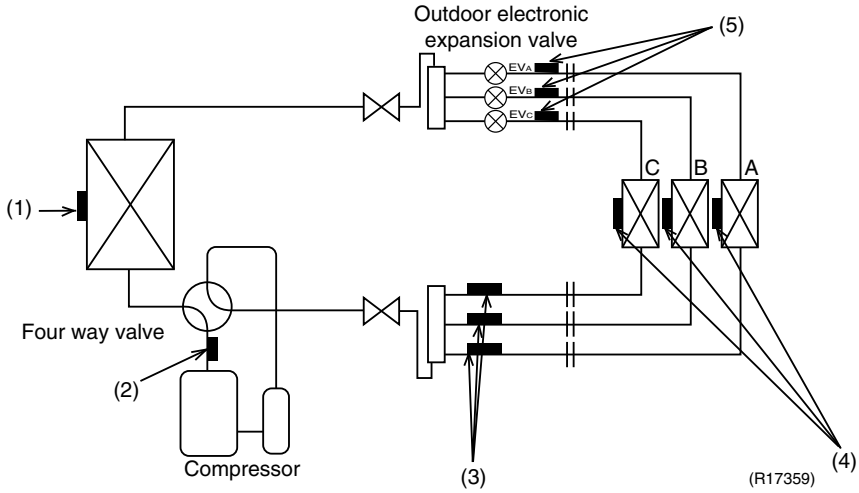

<4MXS32GVJU>

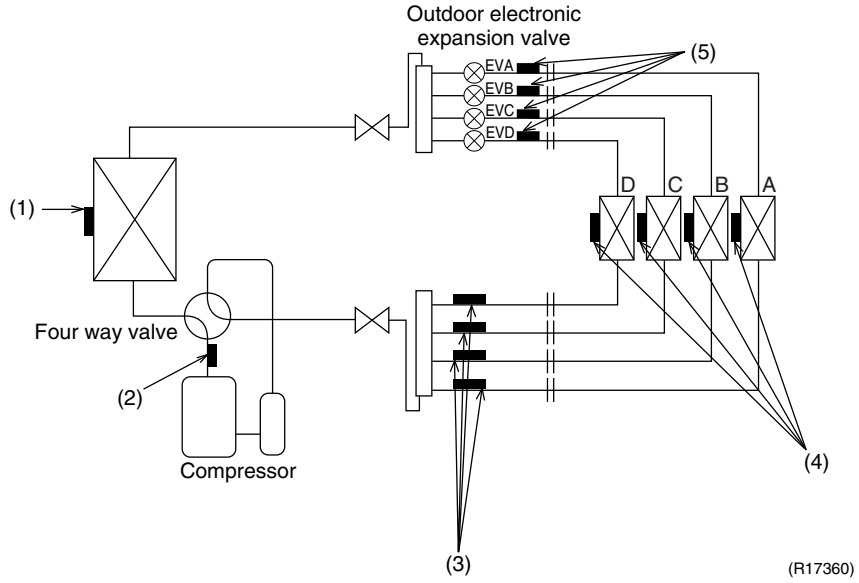

(1) Outdoor Heat Exchanger Thermistor

1. The outdoor heat exchanger thermistor is used for controlling the target discharge pipe temperature. The system sets the target discharge pipe temperature according to the outdoor and indoor heat exchanger temperature, and controls the outdoor electronic expansion valve opening so that the target discharge pipe temperature can be obtained.
2. In cooling operation, the outdoor heat exchanger thermistor is used for detecting the disconnection of the discharge pipe thermistor. When the discharge pipe temperature becomes lower than the outdoor heat exchanger temperature, the discharge pipe thermistor is judged as disconnected.
3. In cooling operation, the outdoor heat exchanger thermistor is used for high pressure protection.

(2) Discharge Pipe Thermistor

1. The discharge pipe thermistor is used for controlling discharge pipe temperature. If the discharge pipe temperature (used in place of the inner temperature of the compressor) rises abnormally, the operating frequency becomes lower or the operation halts.
2. The discharge pipe thermistor is used for detecting disconnection of the discharge pipe thermistor.

(3) Gas Pipe Thermistor

1. In cooling operation, the gas pipe thermistor is used for gas pipe isothermal control. The system controls outdoor electronic expansion valve opening so that the gas pipe temperature in each room becomes equal.

(4) Indoor Heat Exchanger Thermistor

1. The indoor heat exchanger thermistor is used for controlling the target discharge pipe temperature. The system sets the target discharge pipe temperature according to the outdoor and indoor heat exchanger temperature, and controls the outdoor electronic expansion valve opening so that the target discharge pipe temperature can be obtained.
2. In cooling operation, the indoor heat exchanger thermistor is used for freeze-up protection control. If the indoor heat exchanger temperature drops abnormally, the operating frequency becomes lower or the operation halts.
3. In cooling operation, the indoor heat exchanger thermistor is used for anti-icing function. If any of the following conditions are met in the room where operation halts, it is assumed as icing. The conditions are

   $Tc \leq -30.2°F$ (– 1° C)

   $Ta - Tc \geq 18°$ F (10° C)

   where Ta is the room temperature and Tc is the indoor heat exchanger temperature.
4. In heating operation, the indoor heat exchanger thermistor is used for heating peak-cut control. If the indoor heat exchanger temperature rises abnormally, the operating frequency becomes lower or the operation halts.
5. In heating operation, the indoor heat exchanger thermistor is used for detecting the disconnection of the discharge pipe thermistor. When the discharge pipe temperature becomes lower than the maximum indoor heat exchanger temperature, the discharge pipe thermistor is judged as disconnected.
6. When only one indoor unit is operating, the indoor heat exchanger thermistor is used for subcooling control. The actual subcool is calculated with the liquid pipe temperature and the indoor heat exchanger temperature. The system controls the outdoor electronic expansion valve openings to obtain the target subcool.
7. The indoor heat exchanger thermistor is used for wiring error check function. The refrigerant flows in order from the port A to detect the indoor heat exchanger temperature one by one, and then wiring and piping can be checked.

(5) Liquid Pipe Thermistor

1. When only one indoor unit is in heating, the liquid pipe thermistor is used for subcooling control. The actual subcool is calculated with the liquid pipe temperature and the maximum indoor heat exchanger temperature. The system controls the outdoor electronic expansion valve openings to obtain the target subcool.
2. In heating operation, the liquid pipe thermistor is used for liquid pipes isothermal control. The system controls the outdoor electronic expansion valve opening so that the liquid pipe temperatures in each room becomes equal.

3. Control Specification

3.1 Mode Hierarchy

Outline

Air conditioner control has normal operation mode, forced operation mode, and power transistor test mode for installation and servicing.

Detail

- Air conditioner control mode
  - Forced operation mode
    - Forced cooling operation (for pump down operation)
    - Forced heating operation
    - Wiring error check operation
  - Power transistor test mode
  - Normal operation mode
    - Fan
    - Cooling (includes drying)
    - Heating
      - Heating
      - Defrosting
    - Stop (indoor unit: OFF)
      - Preheating operation
      - Discharging from capacitor
      - Stop

(R17361)

Note:
- Unless specified otherwise, a dry operation command is regarded as cooling operation.
- Indoor fan operation cannot be made in multiple indoor units. (A forced fan command is made during forced operation.)

Determine Operation Mode

The system judges the operation mode command which is set by each room in accordance with the procedure, and determines the operation mode of the system.
The following procedure is taken when the modes conflict with each other.
∗1. The system follows the mode which is set first. (First-push, first-set)
∗2. For the rooms where the different mode is set, standby mode is activated. (The operation lamp blinks.)

3.2 Frequency Control

Outline

Frequency that corresponds to each room's capacity is determined according to the difference between the target temperature and the temperature of each room.
The function is explained as follows.

1. How to determine frequency
2. Frequency command from an indoor unit (Difference between a room thermistor temperature and the target temperature)
3. Frequency command from an indoor unit (The ranked capacity of the operating room)
4. Frequency initial setting
5. PI control

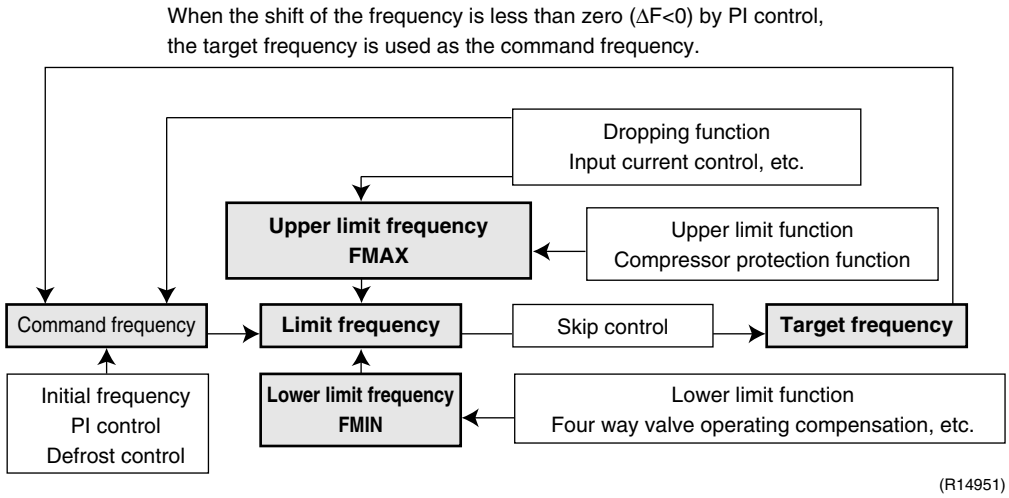

Detail

How to Determine Frequency

The compressor's frequency is determined by taking the following steps.

1. Determine command frequency

- Command frequency is determined in the following order of priority.
  1. Limiting defrost control time
  2. Forced cooling / heating
  3. Indoor frequency command

2. Determine upper limit frequency

- The minimum value is set as upper limit frequency among the frequency upper limits of the following functions:
  Compressor protection, input current, discharge pipe temperature, low Hz high pressure limit, heating peak-cut, freeze-up protection, defrost.

3. Determine lower limit frequency

- The maximum value is set as the lower limit frequency among the frequency lower limits of the following functions:
  Four way valve operation compensation, draft prevention, pressure difference upkeep.

4. Determine prohibited frequency

- There is a certain prohibited frequency such as a power supply frequency.

Indoor Frequency Command (ΔD signal)

The difference between a room thermistor temperature and the target temperature is taken as the "ΔD signal" and is used for frequency command.

Temperature difference	ΔD signal	Temperature difference	ΔD signal	Temperature difference	ΔD signal	Temperature difference	ΔD signal
–3.6°F (–2.0°C)	∗Th OFF	0°F (0°C)	4	3.6°F (2.0°C)	8	7.2°F (4.0°C)	C
–2.7°F (–1.5°C)	1	0.9°F (0.5°C)	5	4.5°F (2.5°C)	9	8.1°F (4.5°C)	D
–1.8°F (–1.0°C)	2	1.8°F (1.0°C)	6	5.4°F (3.0°C)	A	9°F (5.0°C)	E
–0.9°F (–0.5°C)	3	2.7°F (1.5°C)	7	6.3°F (3.5°C)	B	9.9°F (5.5°C)	F

Values depend on the type of indoor unit.

∗Th OFF = Thermostat OFF

Indoor Unit Capacity (S value)

The capacity of the indoor unit is a "S" value and is used for frequency command.

Ex:

Capacity	S value	Capacity	S value
9 kBtu/h	25	18 kBtu/h	50
12 kBtu/h	35	24 kBtu/h	60

Frequency Initial Setting

<Outline>

When starting the compressor, or when conditions are varied due to the change of the operating room, the frequency must be initialized according to the total of a maximum ΔD value of each room and a total value of Q (ΣQ) of the operating room (the room in which the thermos is set to ON).

Q value: Indoor unit output determined from indoor unit volume, airflow rate and other factors.

PI Control (Determine Frequency Up / Down by ΔD Signal)

1. **P control**
   A total of the ΔD value is calculated in each sampling time (20 seconds), and the frequency is adjusted according to its difference from the frequency previously calculated.

2. **I control**
   If the operating frequency is not change more than a certain fixed time, the frequency is adjusted according to the ΣΔD value.
   When the ΣΔD value is low, the frequency is lowered.
   When the ΣΔD value is high, the frequency is increased.

3. **Limit of frequency increasing range**
   When the difference between input current and input current dropping value is less than 1.5 A, the frequency increasing range must be limited.

4. **Frequency management when other controls are functioning**

- When each frequency is dropping;
  Frequency management is carried out only when the frequency drops.
- For limiting lower limit
  Frequency management is carried out only when the frequency rises.

5. **Upper and lower limit of frequency by PI control**
   The frequency upper and lower limits are set according to the total of S values. When the indoor unit quiet operation commands come from more than one room or when the outdoor unit quiet operation commands come from all the rooms, the upper limit frequency is lower than the usual setting.

3.3 Controls at Mode Changing / Start-up

3.3.1 Preheating Operation

Outline

The inverter operation in open phase starts with the conditions of the outdoor temperature and the preheating command from the indoor unit.

Detail

ON Condition

- When the outdoor temperature is below 50.9°F (10.5°C), the inverter operation in open phase starts.

OFF Condition

- When the outdoor temperature is higher than 53.6°F (12°C), the inverter operation in open phase stops.

3.3.2 Four Way Valve Switching

Outline

In heating operation, current is conducted, and in cooling and defrosting operation, current is not conducted. In order to eliminate the switching sound, as the four way valve coil switches from ON to OFF when the heating is stopped, the OFF delay switch of the four-way valve is carried out.

Detail

OFF delay switch of four-way valve:
The four-way valve coil is energized for 150 seconds after the operation is stopped.

3.3.3 Four Way Valve Operation Compensation

Outline

At the beginning of the operation as the four-way valve is switched, the pressure difference to activate the four-way valve is acquired by having output frequency which is more than a certain fixed frequency, for a certain fixed time.

Detail

Starting Conditions

1. When starting the compressor for heating
2. When the operation mode changes from the previous time
3. When starting the compressor for defrosting
4. When starting the compressor for the first time after resetting with the power ON.

The lower limit of frequency keeps **A** Hz for 70 seconds with any conditions 1 through 4 above.

A (Hz)	Cooling	Heating
18 class	40	55
24/32 class	28	

3.3.4 3-Minute Standby

Turning on the compressor is prohibited for 3 minutes after turning off.
(Except when defrosting.)

3.3.5 Compressor Protection Function

When turning the compressor from OFF to ON, the upper limit of frequency is set as follows. (The function is not used when defrosting.)

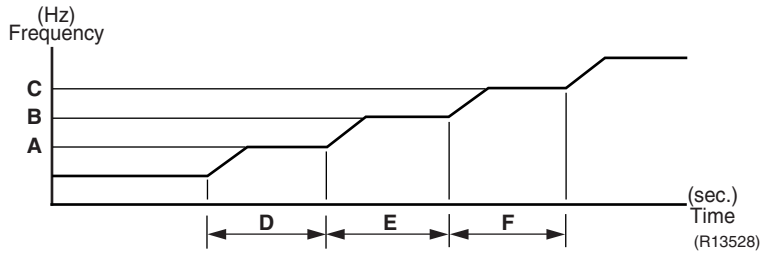

A (Hz)	55
B (Hz)	65
C (Hz)	80
D (seconds)	120
E (seconds)	200
F (seconds)	470

3.4 Discharge Pipe Temperature Control

Outline

The discharge pipe temperature is used as the internal temperature of the compressor. If the discharge pipe temperature rises above a certain level, the upper limit of frequency is set to keep the discharge pipe temperature from rising further.

Detail

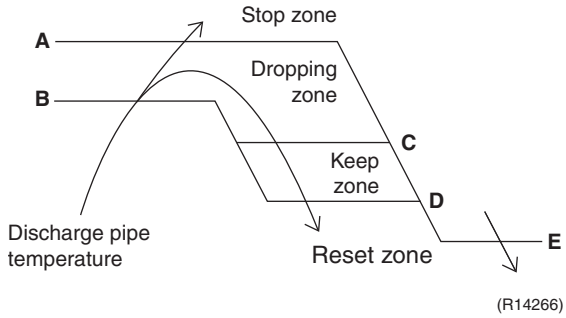

A	248°F (120°C)
B	231.8°F (111°C)
C	228.2°F (109°C)
D	224.6°F (107°C)
E	224.6°F (107°C)

★ The temperatures **D** and **E** are the same.

Zone	Control
Stop zone	When the temperature reaches the stop zone, the compressor stops.
Dropping zone	The upper limit of frequency decreases.
Keep zone	The upper limit of frequency is kept.
Reset zone	The upper limit of frequency is canceled.

3.5 Input Current Control

Outline

An input current is detected by the CT while the compressor is running, and the frequency upper limit is set from the input current.
In case of heat pump models, this control which is the upper limit control of the frequency takes priority over the lower limit control of four way valve operation compensation.

Detail

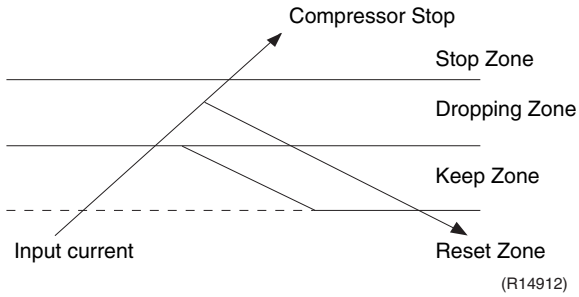

Frequency control in each zone
Stop zone
- After 2.5 seconds in this zone, the compressor is stopped.

Dropping zone
- The upper limit of the compressor frequency is defined as operation frequency – 2 Hz.
- After this, the output frequency is lowered by 2 Hz every second until it reaches the keep zone.

Keep zone
- The present maximum frequency goes on.

Reset zone
- Limit of the frequency is canceled.

Limitation of current dropping and stop value according to the outdoor temperature
- The current drops when outdoor temperature becomes higher than a certain level (depending on the model).

3.6 Freeze-up Protection Control

Outline

During cooling operation, the signals sent from the indoor units control the operating frequency limitation and prevent freezing of the indoor heat exchanger. (The signals from the indoor units are divided into zones.)

Detail

The operating frequency limitation is judged with the indoor heat exchanger temperature 2 seconds after operation starts and 30 seconds after the number of operation room is changed.

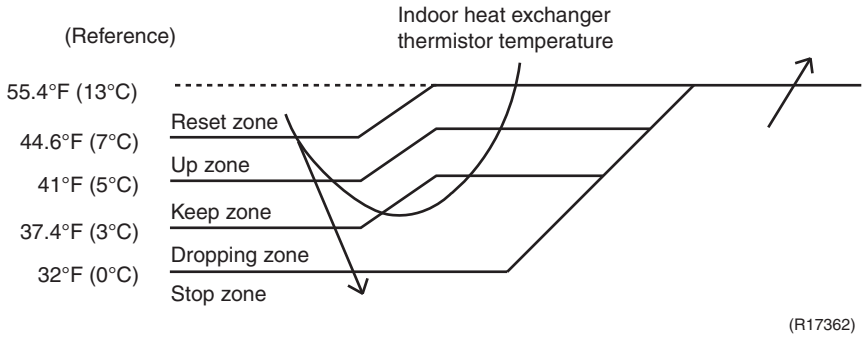

3.7 Heating Peak-cut Control

Outline

During heating operation, the indoor heat exchanger temperature determines the frequency upper limit to prevent abnormal high pressure.

Detail

- The operating frequency is judged with the indoor heat exchanger temperature 2 minutes after the operation starts and **F** seconds after the number of operation room is changed.
- The maximum value of the indoor heat exchanger temperature controls the following (excluding stopped rooms).

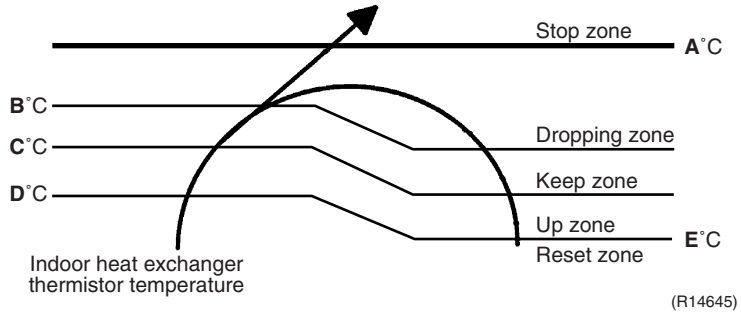

Zone	Control
Stop zone	When the temperature reaches the stop zone, the compressor stops.
Dropping zone	The upper limit of frequency decreases.
Keep zone	The upper limit of frequency is kept.
Up zone	The upper limit of frequency increases.
Reset zone	The upper limit of frequency is canceled.

	18 class	24/32 class
A	149°F (65°C)	149°F (65°C)
B	122°F (50°C)	129.2°F (54°C)
C	118.4°F (48°C)	127.4°F (53°C)
D	117.5°F (47.5°C)	123.8°F (51°C)
E	115.7°F (46.5°C)	120.2°F (49°C)

	F (seconds)
When increase	30
When decrease	2

3.8 Outdoor Fan Control

1. Fan ON control to cool down the electrical box
The outdoor fan is turned ON when the electrical box temperature is high while the compressor is OFF.

2. Fan OFF control during defrosting
The outdoor fan is turned OFF while defrosting.

3. Fan OFF delay when stopped
The outdoor fan is turned OFF 60 seconds after the compressor stops.

4. Fan speed control for pressure difference upkeep
The rotation speed of the outdoor fan is controlled for keeping the pressure difference during cooling operation with low outdoor temperature.

- When the pressure difference is low, the rotation speed of the outdoor fan is reduced.
- When the pressure difference is high, the rotation speed of the outdoor fan is controlled as well as normal operation.

5. Fan control when the number of heating room decreases
When the outdoor temperature is more than 50°F (10°C), the fan is turned off for 30 seconds.

6. Fan speed control during forced operation
The outdoor fan is controlled as well as normal operation during the forced operation.

7. Fan speed control during POWERFUL operation
The rotation speed of the outdoor fan is increased during the POWERFUL operation.

8. Fan speed control during indoor / outdoor unit quiet operation
The rotation speed of the outdoor fan is reduced by the command of the indoor / outdoor unit quiet operation.

9. Fan ON/OFF control when operation starts / stops
The outdoor fan is turned ON when the operation starts. The outdoor fan is turned OFF when the operation stops.

3.9 Liquid Compression Protection Function

Outline

In order to obtain the dependability of the compressor, the compressor is stopped according to the outdoor temperature and the outdoor heat exchanger temperature.

Detail

■ Operation stops depending on the outdoor temperature
The compressor turns off under the conditions that the system is in cooling operation and the outdoor temperature is below 10.4°F (–12°C).

3.10 Defrost Control

Outline

Defrosting is carried out by the cooling cycle (reverse cycle). The defrosting time or outdoor heat exchanger temperature must be more than a certain value to finish.

Detail

Conditions for Starting Defrost

- The starting conditions are determined with the outdoor temperature and the outdoor heat exchanger temperature.
- The system is in heating operation.
- The compressor operates for 6 minutes.
- More than **A** minutes of accumulated time pass after the start of the operation, or ending the previous defrosting.

Conditions for Canceling Defrost

The target heat exchanger temperature as the canceling condition is selected in the range of 39.2 ~ 53.6°F (4 ~ 12°C) according to the outdoor temperature.

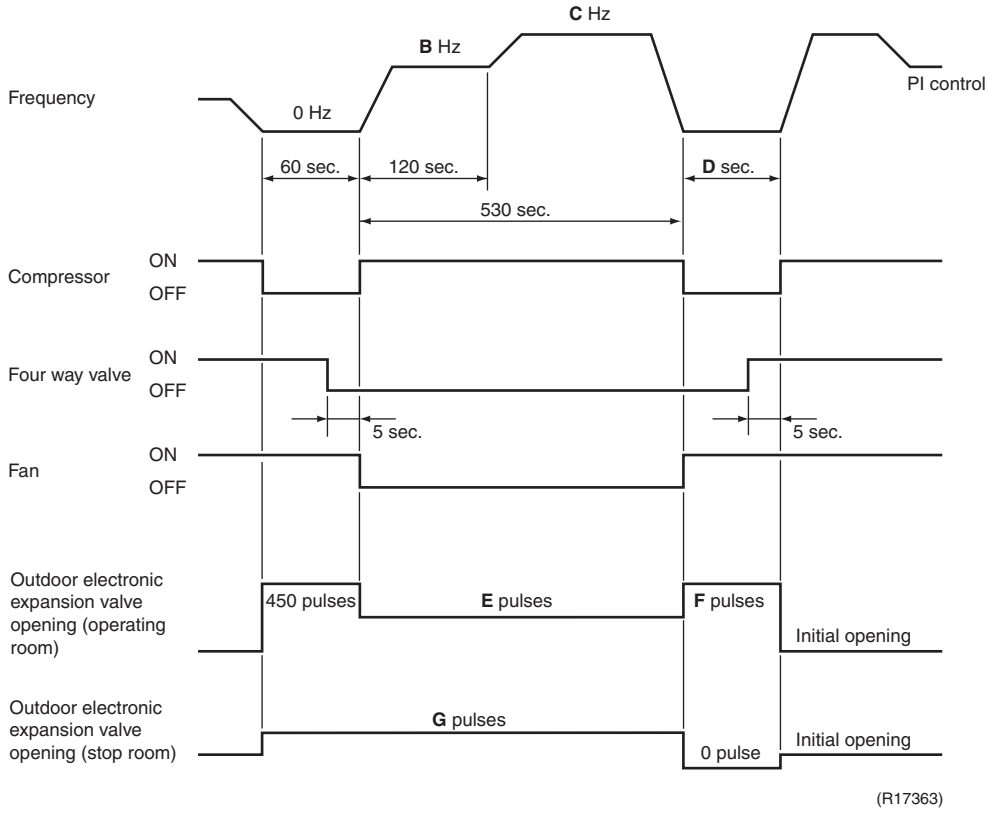

	18 class	24/32 class
A (minutes)	43	38
B (Hz)	54	39
C (Hz)	82	62
D (seconds)	30	60
E (pulses)	450	350
F (pulses)	450	400
G (pulses)	140	160

★18 class: The pulses **E** and **F** are the same.

3.11 Low Hz High Pressure Limit

Outline

The system controls the upper limit of the frequency to prevent abnormal high pressure while the frequency is low.
Control is carried out according to three zones.

Detail

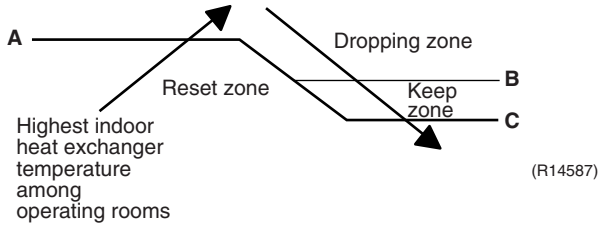

	18 class	24/32 class
A	140°F (60°C)	134.6°F (57°C)
B	138.2°F (59°C)	132.8°F (56°C)
C	132.8°F (56°C)	127.4°F (53°C)

Note: Dropping: The system stops 2 minutes after staying in the dropping zone.

3.12 Outdoor Electronic Expansion Valve Control

Outline

The following items are included in the outdoor electronic expansion valve control.

Outdoor electronic expansion valve is fully closed

1. Outdoor electronic expansion valve is fully closed when turning on the power.
2. Pressure equalizing control

Room Distribution Control

1. Gas pipe isothermal control
2. SC (subcooling) control
3. Liquid pipe temperature control (with all ports connected and all rooms being air-conditioned)
4. Liquid pipe temperature control for stopped rooms
5. Dew prevention control for indoor rotor

Open Control

1. Outdoor electronic expansion valve control when starting operation
2. Outdoor electronic expansion valve control when the frequency changes
3. Outdoor electronic expansion valve control for defrosting
4. Outdoor electronic expansion valve control for oil recovery
5. Outdoor electronic expansion valve control when a discharge pipe temperature is abnormally high
6. Outdoor electronic expansion valve control when the discharge pipe thermistor is disconnected
7. Outdoor electronic expansion valve control for indoor unit freeze-up protection

Feedback Control

1. Target discharge pipe temperature control

Detail

The followings are the examples of outdoor electronic expansion valve control which function in each operation mode.

Operation pattern	● : Holding Functions — : No Functions	Gas pipe isothermal control	SC (subcooling) control	Control when the frequency changes	Control for abnormally high discharge pipe temperature	Oil recovery control	Indoor freeze-up protection control	Liquid pipe temperature control	Liquid pipe temperature control for non-operating units	Dew prevention control for indoor rotor
When power is turned on	Fully closed when power is turned on	—	—	—	—	—	—	—	—	—
Cooling, 1 room operation	Open control when starting	—	—	—	●	●	●	—	—	—
	(Control of target discharge pipe temperature)	—	—	●	●	●	●	—	—	●
Cooling, 2 rooms operation to Cooling, 4 rooms operation	Control when the operating room is changed	—	—	—	●	●	●	—	—	●
	(Control of target discharge pipe temperature)	●	—	●	●	●	●	—	—	●
Stop	Pressure equalizing control	—	—	—	—	—	—	—	—	—
Heating, 1 room operation	Open control when starting	—	—	—	●	—	—	—	—	—
	(Control of target discharge pipe temperature)	—	● ★2	●	●	—	—	● ★1	● ★3	—
Heating, 2 rooms operation	Control when the operating room is changed	—	—	—	●	—	—	—	—	—
	(Control of target discharge pipe temperature)	—	● ★2	●	●	—	—	● ★1	● ★3	—
	(Defrost control)	—	—	—	—	—	—	—	—	—
Stop	Pressure equalizing control	—	—	—	—	—	—	—	—	—
Heating operation	Open control when starting	—	—	—	●	—	—	—	—	—
Control of discharge pipe thermistor disconnection	Continue	—	● ★2	—	—	—	—	● ★1	● ★3	—
Stop	Pressure equalizing control	—	—	—	—	—	—	—	—	—

(R16007)

★1: When all the indoor units are operating, “liquid pipe temperature control” is conducted.
★2: “SC (subcooling) control” is conducted for the operating indoor units, when some of the units are not operating.
★3: “Liquid pipe temperature control for stopped room” is conducted for the non-operating indoor units.

3.12.1 Fully Closing with Power on

The outdoor electronic expansion valve is initialized when the power is turned on. The opening position is set and the pressure equalization is developed.

3.12.2 Pressure Equalizing Control

When the compressor is stopped, the pressure equalizing control is activated. The outdoor electronic expansion valve opens, and develops the pressure equalization.

3.12.3 Opening Limit Control

Outline

The maximum and minimum opening of the outdoor electronic expansion valve are determined.

Detail

- Maximum outdoor electronic expansion valve opening in the operating room: 450 pulses
- Minimum outdoor electronic expansion valve opening in the operating room: 75 pulses

The outdoor electronic expansion valve is fully closed in a room where cooling operation is stopped and is opened at a fixed degree during defrosting.

3.12.4 Starting Operation Control / Changing Operation Room

The outdoor electronic expansion valve opening is controlled when the operation starts, and prevents superheating or liquid compression.

3.12.5 Control when the Frequency Changes

When the target discharge pipe temperature control is active, if the target frequency is changed to a specified value in a certain time period, the target discharge pipe temperature control is canceled and the target opening of the outdoor electronic expansion valve is changed.

3.12.6 Oil Recovery Function

Outline

Outdoor electronic expansion valve opening in a room where cooling operation is stopped is set to open for a certain time at specified intervals so that the oil does not accumulate.

Detail

During cooling operation, after every 1 hour of continuous operation, the outdoor electronic expansion valves in the operation stopped room is opened by 80 pulses for specified time.

3.12.7 High Discharge Pipe Temperature Control

When the compressor is operating, if the discharge pipe temperature exceeds a certain value, the outdoor electronic expansion valve opens and the refrigerant runs to the low pressure side.
This procedure lowers the discharge pipe temperature.

3.12.8 Control for Disconnection of the Discharge Pipe Thermistor

Outline

The disconnection of the discharge pipe thermistor is detected by comparing the discharge pipe temperature with the condensing temperature. If the discharge pipe thermistor is disconnected, the outdoor electronic expansion valve opens according to the outdoor temperature and the operation frequency, operates for a specified time, and then stops.
After 3 minutes, the operation restarts and checks if the discharge pipe thermistor is disconnected. If the discharge pipe thermistor is disconnected, the system stops after operating for a specified time.
If the disconnection is detected repeatedly, the system is shut down. When the compressor runs for 60 minutes without any error, the error counter is reset.

Detail

Detect Disconnection
When the starting control (630 seconds) finishes, the following adjustment is made.

1. When the operation mode is cooling
   When the following condition is fulfilled, the discharge pipe thermistor disconnection is ascertained.
   Discharge pipe temperature + 10.8°F (6°C) < outdoor heat exchanger temperature
2. When the operation mode is heating
   When the following condition is fulfilled, the discharge pipe thermistor disconnection is ascertained.
   Discharge pipe temperature + 10.8°F (6°C) < highest indoor heat exchanger temperature

Adjustment when the thermistor is disconnected
When the disconnection is ascertained, the compressor continues operation for 9 minutes and then stops.
If the compressor stops repeatedly, the system is shut down.

3.12.9 Gas Pipe Isothermal Control During Cooling

When the units are operating in multiple rooms, the gas pipe temperature is detected and the outdoor electronic expansion valve opening is adjusted so that the temperature of the gas pipe in each room becomes equal.

- When the gas pipe temperature > the average gas pipe temperature, → open the outdoor electronic expansion valve in that room
- When the gas pipe temperature < the average gas pipe temperature, → close the outdoor electronic expansion valve in that room

The temperatures are monitored every 40 seconds.

3.12.10 SC (Subcooling) Control

Outline

The liquid pipe temperature and the heat exchanger temperature are detected and the outdoor electronic expansion valve opening is compensated so that the SC of each room becomes the target SC.

- When the actual SC is > target SC, open the outdoor electronic expansion valve of the room.
- When the actual SC is < target SC, close the outdoor electronic expansion valve of the room.

Detail

Start Conditions
After finishing the starting control (630 seconds), (all) the outdoor electronic expansion valve(s) for the operating room is/are controlled.

Determine Outdoor Electronic Expansion Valve Opening
The outdoor electronic expansion valve opening is adjusted so that the temperature difference between the maximum heat exchanger temperature of connected room and the liquid pipe temperature thermistor becomes constant.

3.12.11 Target Discharge Pipe Temperature Control

The target discharge pipe temperature is obtained from the indoor and outdoor heat exchanger temperature, and the outdoor electronic expansion valve opening is adjusted so that the actual discharge pipe temperature becomes close to the target discharge pipe temperature. (Indirect SH (superheating) control using the discharge pipe temperature)

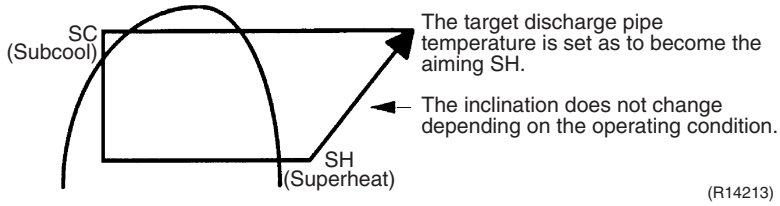

The outdoor electronic expansion valve opening and the target discharge pipe temperature are adjusted every 20 seconds. The target discharge pipe temperature is controlled by indoor heat exchanger temperature and outdoor heat exchanger temperature. The opening degree of the outdoor electronic expansion valve is controlled by the followings.

- Target discharge pipe temperature
- Actual discharge pipe temperature
- Previous discharge pipe temperature

3.13 Malfunctions

3.13.1 Sensor Malfunction Detection

Sensor malfunction may occur either in the thermistor or current transformer (CT) system.

Relating to Thermistor Malfunction

1. Outdoor heat exchanger thermistor
2. Discharge pipe thermistor
3. Radiation fin thermistor
4. Gas pipe thermistor for each room
5. Outdoor temperature thermistor
6. Liquid pipe thermistor

Relating to CT Malfunction

Refer to “CT or related abnormality” on page 179 for detail.

3.13.2 Detection of Overcurrent and Overload

Outline

In order to protect the inverter, an excessive output current is detected and the OL temperature is observed to protect the compressor.

Detail

- If the inverter current exceeds 17 ~ 20 A (depending on the model), the system shuts down the compressor.
- If the OL (compressor head) temperature exceeds 266°F (130°C) , the compressor stops.

3.13.3 Refrigerant Shortage Control

Outline

I : Detecting by power consumption

If the power consumption is below the specified value and the frequency is higher than the specified frequency, it is regarded as refrigerant shortage.

The power consumption is low comparing with that in the normal operation when refrigerant is insufficient, and refrigerant shortage is detected by checking power consumption.

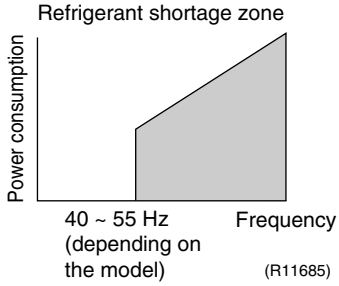

II : Detecting by discharge pipe temperature

If the discharge pipe temperature is higher than the target discharge pipe temperature, and the outdoor electronic expansion valve is fully open for more than the specified time, it is regarded as refrigerant shortage.

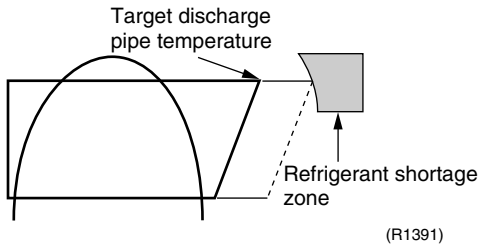

Refer to “Refrigerant shortage” on page 156 for detail.

3.13.4 Anti-icing Function

If the indoor heat exchanger's temperature drops below the specified temperature during cooling, the outdoor electonic expansion valve will open and the *fully-closed operation* is carried out in the room. After this, if an abnormal freezing occurs for longer than a specified time, the system will shut down.

Part 5
Operation Manual

1. System Configuration 71
2. CTXS-J, CTXS-H, FTXS-H Series 72
   - 2.1 Remote Controller 72
   - 2.2 AUTO · DRY · COOL · HEAT · FAN Operation 74
   - 2.3 Adjusting the Airflow Direction 76
   - 2.4 INTELLIGENT EYE Operation 78
   - 2.5 POWERFUL Operation 80
   - 2.6 OUTDOOR UNIT QUIET Operation 81
   - 2.7 HOME LEAVE Operation 82
   - 2.8 TIMER Operation 84
   - 2.9 Note for Multi System 86
3. CTXS-L, FTXS-L Series 88
   - 3.1 Remote Controller 88
   - 3.2 AUTO · DRY · COOL · HEAT · FAN Operation 90
   - 3.3 Adjusting the Airflow Direction and Rate 92
   - 3.4 COMFORT AIRFLOW / INTELLIGENT EYE Operation 95
   - 3.5 POWERFUL Operation 97
   - 3.6 OUTDOOR UNIT QUIET Operation 98
   - 3.7 ECONO Operation 99
   - 3.8 OFF TIMER Operation 100
   - 3.9 ON TIMER Operation 101
   - 3.10 WEEKLY TIMER Operation 102
   - 3.11 Note for Multi System 108
   - 3.12 Quick Reference 110
4. FDXS-D Series 111
   - 4.1 Remote Controller 111
   - 4.2 AUTO · DRY · COOL · HEAT · FAN Operation 112
   - 4.3 POWERFUL Operation 114
   - 4.4 OUTDOOR UNIT QUIET Operation 115
   - 4.5 HOME LEAVE Operation 116
   - 4.6 TIMER Operation 118
5. CDXS-L, FDXS-L Series 120
   - 5.1 Remote Controller 120
   - 5.2 AUTO · DRY · COOL · HEAT · FAN Operation 122
   - 5.3 Adjusting the Airflow Rate 124
   - 5.4 POWERFUL Operation 125
   - 5.5 OUTDOOR UNIT QUIET Operation 126
   - 5.6 ECONO Operation 127
   - 5.7 OFF TIMER Operation 128
   - 5.8 ON TIMER Operation 129
   - 5.9 Note for Multi System 130
   - 5.10 Quick Reference 132

1. System Configuration

After installation and trial operation of the room air conditioner are completed, the air conditioner should be handled and operated as described in the following pages. Every user should be informed on the correct method of operation and how to check if it can cool (or heat) well, and how to use it efficiently.

Providing instructions to the user can reduce requests for servicing by 80%. However proficient the installation and operating functions of the AC system are, the customer may fault either the room air conditioner or its installation work when it is actually due to improper handling. The installation work and the handing-over of the unit can only be considered completed when its handling has been fully explained to the user without using technical terms, and while imparting full knowledge of the equipment.

2. CTXS-J, CTXS-H, FTXS-H Series

2.1 Remote Controller

Name of Parts

Remote Controller: ARC452A9

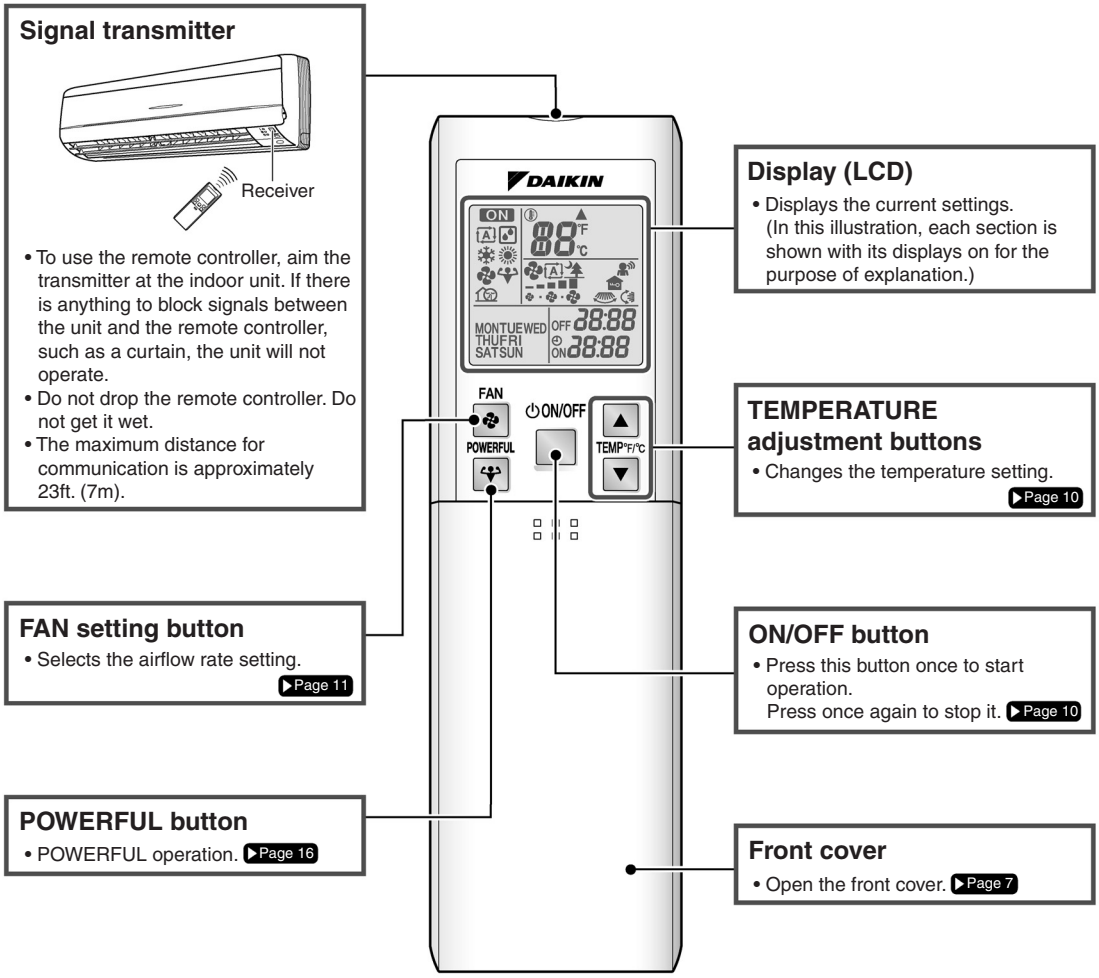

6

Open the front cover

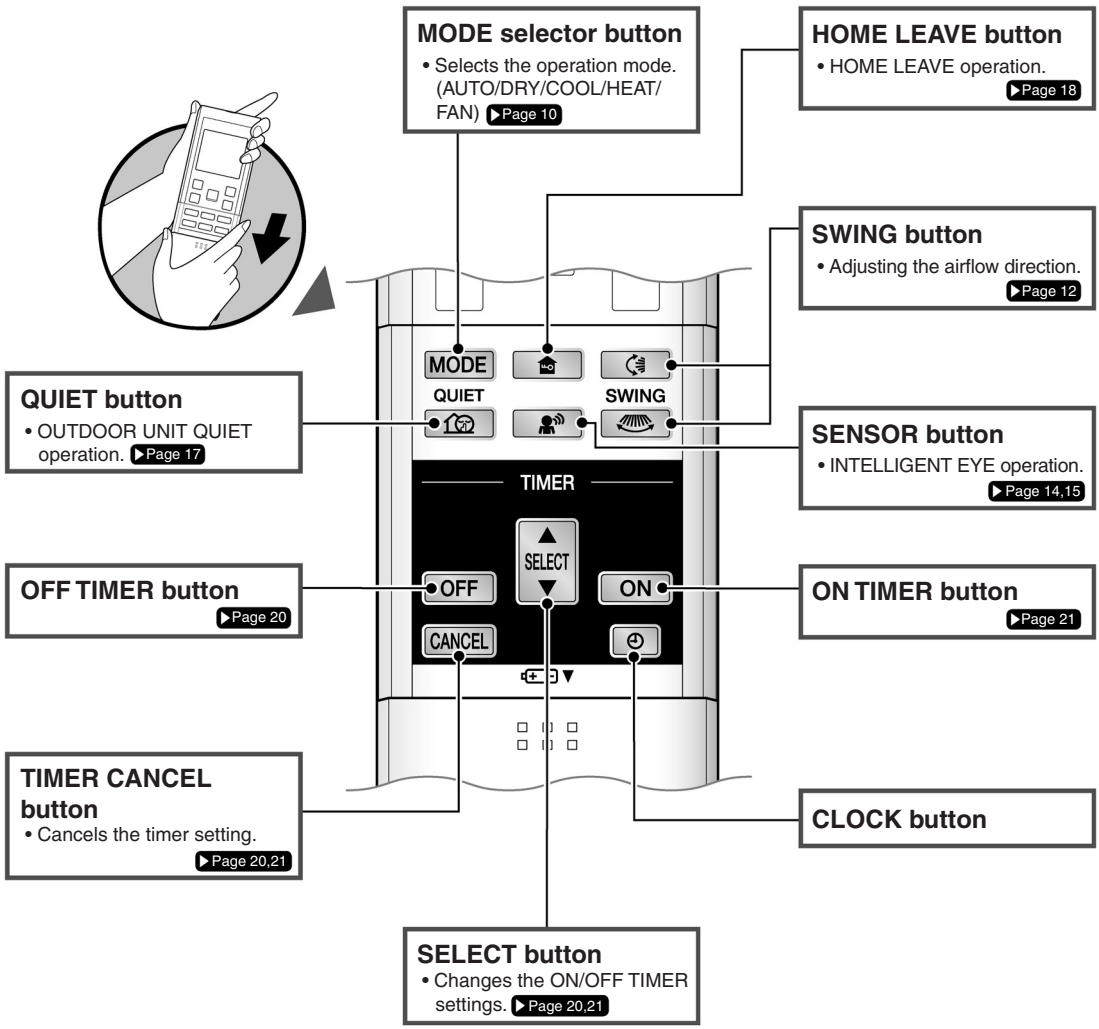

2.2 AUTO · DRY · COOL · HEAT · FAN Operation

AUTO · DRY · COOL · HEAT · FAN Operation

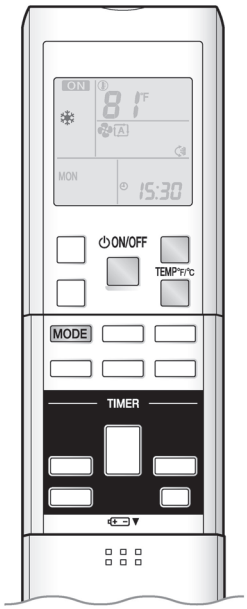

The air conditioner operates with the operation mode of your choice.
From the next time on, the air conditioner will operate with the same operation mode.

■ To start operation

1. Press MODE and select a operation mode.

- Each pressing of the button advances the mode setting in sequence.

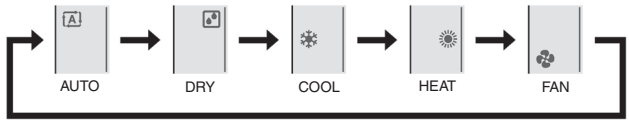

2. Press ON/OFF .

- "ON" is displayed on the LCD.
- The OPERATION lamp lights up.

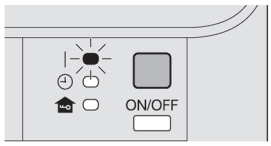

Display

■ To stop operation

Press ON/OFF again.

- "ON" is no longer displayed on the LCD.
- The OPERATION lamp goes off.

■ To change the temperature setting

Press ▲ (TEMP°F/°C) or ▼ (TEMP°F/°C) .

- The displayed items on the LCD will change whenever either one of the buttons is pressed.

DRY or FAN operation	COOL operation	HEAT operation	AUTO operation
The temperature setting is not variable.	64-90˚F (18-32˚C)	50-86˚F (10-30˚C)	64-86˚F (18-30˚C)
	Press ▲ to raise the temperature and press ▼ to lower the temperature.		

10

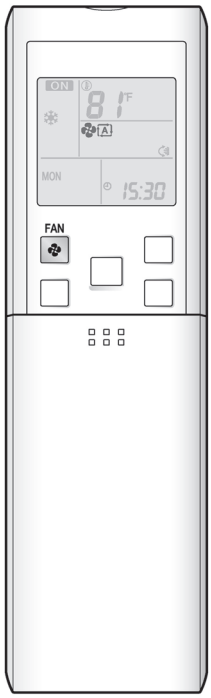

■ To change the airflow rate setting

Press .

DRY operation	AUTO or COOL or HEAT or FAN operation
The airflow rate setting is not variable.	5 levels of airflow rate setting from "" to "" plus "A" and "" are available.

- Indoor unit quiet operation
  When the airflow is set to "", the noise from the indoor unit will become quieter.
  Use this when making the noise quieter.
  The unit might lose capacity when the airflow rate is set to a weak level.
- Each pressing of the button advances the airflow rate setting in sequence.

NOTE

■ **Notes on HEAT operation**
- Since this air conditioner heats the room by taking heat from outdoor air to indoors, the heating capacity becomes smaller in lower outdoor temperatures. If the heating effect is insufficient, it is recommended to use another heating appliance in combination with the air conditioner.
- The heat pump system heats the room by circulating hot air around all parts of the room. After the start of HEAT operation, it takes some time before the room gets warmer.
- In HEAT operation, frost may occur on the outdoor unit and lower the heating capacity. In that case, the system switches into defrosting operation to take away the frost.
- During defrosting operation, hot air does not flow out of indoor unit.

■ **Note on COOL operation**
- This air conditioner cools the room by blowing the hot air in the room outside, so if the outside temperature is high, the performance of the air conditioner drops.

■ **Note on DRY operation**
- The computer chip works to rid the room of humidity while maintaining the temperature as much as possible. It automatically controls temperature and airflow rate, so manual adjustment of these functions is unavailable.

■ **Notes on AUTO operation**
- In AUTO operation, the system selects a temperature setting and an appropriate operation mode (COOL or HEAT) based on the room temperature at the start of the operation.
- The system automatically reselects setting at a regular interval to bring the room temperature to user-setting level.

■ **Note on FAN operation**
- This is valid for fan only.

■ **Note on airflow rate setting**
- At smaller airflow rates, the cooling (heating) effect is also smaller.

11

2.3 Adjusting the Airflow Direction

Adjusting the Airflow Direction

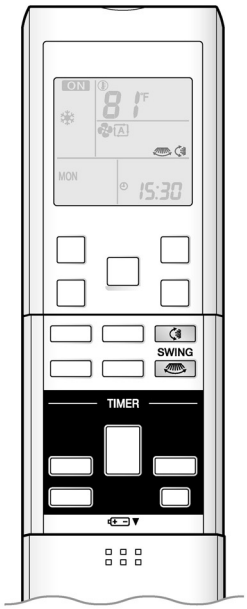

You can adjust the airflow direction to increase your comfort.

Adjusting the upper and lower airflow direction

■ To adjust the louvers (horizontal blades)

1. Press .

- "" is displayed on the LCD and the louvers will begin to swing.

2. When the louvers have reached the desired position, press once more.

- The louvers will stop moving.
- "" is no longer displayed on the LCD.

Adjusting the right and left airflow direction

■ To adjust the fins (vertical blades)

3. Press .

- "" is displayed on the LCD.

4. When the fins have reached the desired position, press once more.

- The fins will stop moving.
- "" is no longer displayed on the LCD.

12

■ To start 3-D airflow

1. 3. Press the and the :
the "" and " " display will light up and the louvers and fins will move in turn.

■ To cancel 3-D airflow

2. 4. Press either the or the .

NOTE

■ **Note on the angles of the louvers**

- When is selected, the louvers swinging range depends on the operation. (See the figure.)

■ **Note on 3-D airflow**

- Using 3-D airflow circulates cold air, which tends to collected at the bottom of the room, and hot air, which tends to collect near the ceiling, throughout the room, preventing areas of cold and hot developing.

■ **ATTENTION**

- Always use a remote controller to adjust the angles of the louvers and fins. If you attempt to move it forcibly with hand when it is swinging, the mechanism may be broken.
- Always use a remote controller to adjust the fins angles. Inside the air outlet, a fan is rotating at a high speed.

COOL and DRY operation

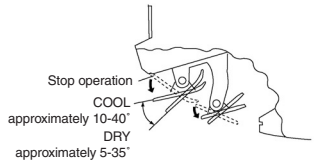

HEAT and FAN operation

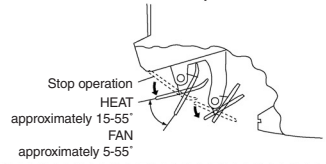

13

2.4 INTELLIGENT EYE Operation

INTELLIGENT EYE Operation

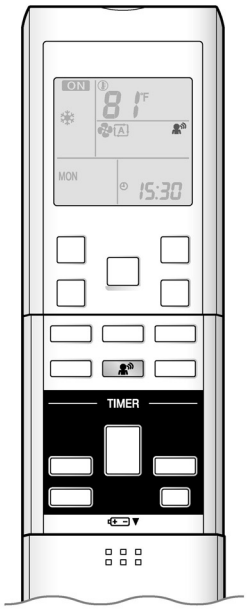

"INTELLIGENT EYE" is the infrared sensor which detects the human movement.

■ To start INTELLIGENT EYE operation

1. Press .

- " " is displayed on the LCD.

■ To cancel INTELLIGENT EYE operation

2. Press again.

- " " is no longer displayed on the LCD.

[Example]

When somebody in the room

- **Normal operation**

  The air conditioner is in normal operation while the sensor is detecting the movement of people.

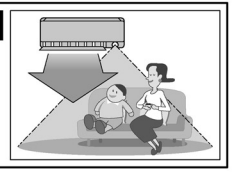

When nobody in the room

- **20 minutes after, start energy saving operation.**

  The set temperature is shifted in ±3.6°F (±2°C) steps.

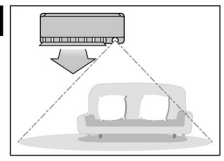

Somebody back in the room

- **Back to normal operation.**

  The air conditioner will return to normal operation when the sensor detects the movement of people again.

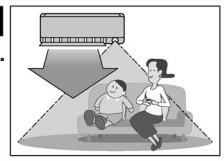

14

“INTELLIGENT EYE” is useful for energy saving

■ **Energy saving operation**

- Change the temperature –3.6°F (–2°C) in HEAT / +3.6°F (+2°C) in COOL / +1.8°F (+1°C) in DRY operation from set temperature.
- Decrease the airflow rate slightly in FAN operation only.
- If no presence detected in the room for 20 minutes.

NOTE

■ **Notes on INTELLIGENT EYE operation**

- Application range is as follows.

Vertical angle 90°
(Side view)

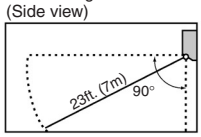

Horizontal angle 110°
(Top view)

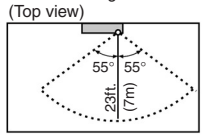

- Sensor may not detect moving objects further than 23ft. (7m) away. (Check the application range.)
- Sensor detection sensitivity changes according to indoor unit location, the speed of passersby, temperature range, etc.
- The sensor also mistakenly detects pets, sunlight, fluttering curtains and light reflected off of mirrors as passersby.
- INTELLIGENT EYE operation will not go on during POWERFUL operation.
- NIGHT SET mode ▶Page 20 will not go on during use of INTELLIGENT EYE operation.

⚠ CAUTION

- Do not place large objects near the sensor.
  Also keep heating units or humidifiers outside the sensor’s detection area. This sensor can detect undesirable objects.
- Do not hit or forcefully push the INTELLIGENT EYE sensor. This can lead to damage and malfunction.

15

2.5 POWERFUL Operation

POWERFUL Operation

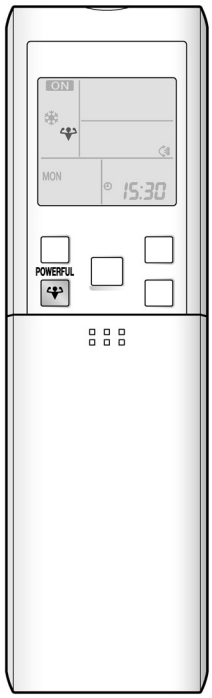

POWERFUL operation quickly maximizes the cooling (heating) effect in any operation mode. You can get the maximum capacity.

■ To start POWERFUL operation

Press [POWERFUL] during operation.

- POWERFUL operation ends in 20 minutes. Then the system automatically operates again with the previous settings which were used before POWERFUL operation.
- "POWERFUL" is displayed on the LCD.
- When using POWERFUL operation, there are some functions which are not available.

■ To cancel POWERFUL operation

Press [POWERFUL] again.

- "POWERFUL" is no longer displayed on the LCD.

NOTE

■ **Notes on POWERFUL operation**

- POWERFUL operation cannot be used together with QUIET operation.
  Priority is given to the function of whichever button is pressed last.
- **In COOL and HEAT operation**
  To maximize the cooling (heating) effect, the capacity of outdoor unit must be increased and the airflow rate be fixed to the maximum setting.
  The temperature and airflow settings are not variable.
- **In DRY operation**
  The temperature setting is lowered by 4.5°F (2.5°C) and the airflow rate is slightly increased.
- **In FAN operation**
  The airflow rate is fixed to the maximum setting.
- **In AUTO operation**
  To maximize the cooling (heating) effect, the capacity of outdoor unit must be increased and the airflow rate be fixed to the maximum setting.
- POWERFUL operation will not increase the capacity of the air conditioner if the air conditioner is already in operation with its maximum capacity demonstrated.

16

2.6 OUTDOOR UNIT QUIET Operation

OUTDOOR UNIT QUIET Operation

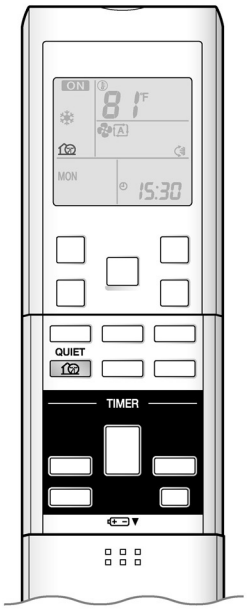

OUTDOOR UNIT QUIET operation lowers the sound level of the outdoor unit by changing the frequency and fan speed on the outdoor unit. This function is convenient during night.

■ To start OUTDOOR UNIT QUIET operation

Press .

• "" is displayed on the LCD.

■ To cancel OUTDOOR UNIT QUIET operation

Press again.

• "" is no longer displayed on the LCD.

NOTE

■ **Notes on OUTDOOR UNIT QUIET operation**

- If using a multi system, this function will work only when the OUTDOOR UNIT QUIET operation is set on all operated indoor units. However, if using priority room setting, see note for multi system. ▶Page 22
- This function is available in COOL, HEAT, and AUTO operation. (This is not available in FAN and DRY operation)
- POWERFUL operation and OUTDOOR UNIT QUIET operation cannot be used at the same time. Priority is given to the function of whichever button is pressed last.
- If operation is stopped using the remote controller or the indoor unit ON/OFF switch when using OUTDOOR UNIT QUIET operation, "" will remain on the remote controller display.
- OUTDOOR UNIT QUIET operation will drop neither the frequency nor fan speed if the frequency and fan speed have been already dropped low enough.

17

2.7 HOME LEAVE Operation

HOME LEAVE Operation

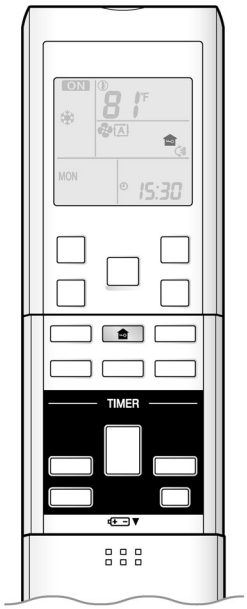

HOME LEAVE operation is a function which allows you to record your preferred temperature and airflow rate settings.

■ To start HOME LEAVE operation

1. Press .

- " " is displayed on the LCD.
- The HOME LEAVE lamp lights up.

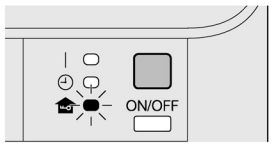

Display

■ To cancel HOME LEAVE operation

2. Press again.

- " " is no longer displayed on the LCD.
- The HOME LEAVE lamp goes off.

Before using HOME LEAVE operation.

■ To set the temperature and airflow rate for HOME LEAVE operation

When using HOME LEAVE operation for the first time, please set the temperature and airflow rate for HOME LEAVE operation. Record your preferred temperature and airflow rate.

	Initial setting		Selectable range	
	Temperature	Airflow rate	Temperature	Airflow rate
Cooling	77˚F (25˚C)	AUTO	64-90˚F (18-32˚C)	5 step, " " and " "
Heating	77˚F (25˚C)	AUTO	50-86˚F (10-30˚C)	5 step, " " and " "

1. Press . Make sure " " is displayed in the remote controller display.
2. Adjust the set temperature with ▲ or ▼ as you like.
3. Adjust the airflow rate with FAN setting button as you like.

HOME LEAVE operation will run with these settings the next time you use the unit. To change the recorded information, repeat steps 1-3.

18

■ What's the HOME LEAVE operation?

Is there a set temperature and airflow rate which is most comfortable, a set temperature and airflow rate which you use the most? HOME LEAVE operation is a function that allows you to record your favorite set temperature and airflow rate. You can start your favorite operation mode simply by pressing on the remote controller. This function is convenient in the following situations.

■ Useful in these cases

1. Use as an energy-saving mode.

Set the temperature 3-5˚F(2-3˚C) higher (COOL) or lower (HEAT) than normal. Setting the fan speed to the lowest setting allows the unit to be used in energy-saving mode. Also convenient for use while you are out or sleeping.

• Every day before you leave the house...

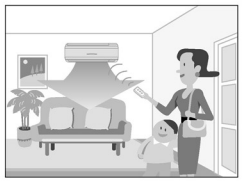

When you go out, press and the air conditioner will adjust capacity to reach the preset temperature for HOME LEAVE operation.

When you return, you will be welcomed by a comfortably air conditioned room.

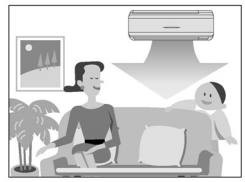

Press again, and the air conditioner will adjust capacity to the set temperature for normal operation.

• Before bed...

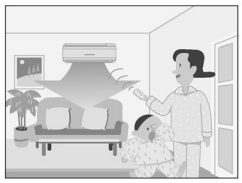

Set the unit to HOME LEAVE operation before leaving the living room when going to bed.

The unit will maintain the temperature in the room at a comfortable level while you sleep.

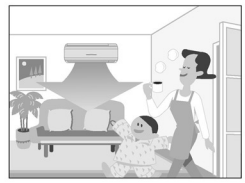

When you enter the living room in the morning, the temperature will be just right. Disengaging HOME LEAVE operation will return the temperature to that set for normal operation. Even the coldest winters will pose no problem!

2. Use as a favorite mode.

Once you record the temperature and airflow rate settings you most often use, you can retrieve them by pressing .
You do not have to make all the selections again.

NOTE

- Once the temperature and airflow rate for HOME LEAVE operation are set, those settings will be used whenever HOME LEAVE operation is used in the future. To change these settings, please refer to the before using HOME LEAVE operation section above.
- HOME LEAVE operation is only available in COOL and HEAT operation. It cannot be used in AUTO, DRY, and FAN operation.
- HOME LEAVE operation runs in accordance with the previous operation mode (COOL or HEAT) before using HOME LEAVE operation.
- HOME LEAVE operation and POWERFUL operation cannot be used at the same time. Last button that was pressed has priority.
- The operation mode cannot be changed while HOME LEAVE operation is being used.
- When operation is shut off during HOME LEAVE operation, using the remote controller or the indoor unit ON/OFF switch, " " will remain on the remote controller display.

19

2.8 TIMER Operation

TIMER Operation

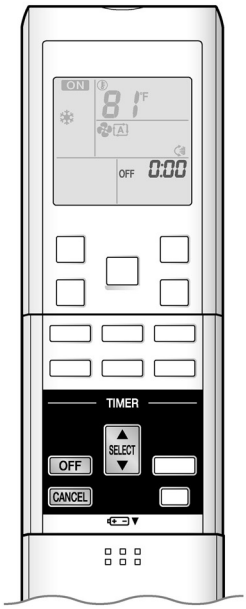

Timer functions are useful for automatically switching the air conditioner on or off at night or in the morning. You can also use OFF TIMER and ON TIMER in combination.

■ To use OFF TIMER operation

- Check that the clock is correct.
  If not, set the clock to the present time.

1. Press OFF .

"0:00" is displayed.
" OFF " blinks.

2. Press SELECT until the time setting reaches the point you like.

- Each pressing of either button increases or decreases the time setting by 10 minutes. Holding down either button changes the setting rapidly.

3. Press OFF again.

- The TIMER lamp lights up.

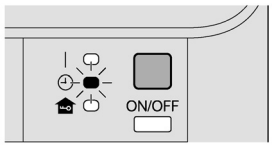

Display

■ To cancel OFF TIMER operation

Press CANCEL .

- The TIMER lamp goes off.

NOTE

■ **Notes on TIMER operation**

- When TIMER is set, the present time is not displayed.
- Once you set ON/OFF TIMER, the time setting is kept in the memory. (The memory is canceled when remote controller batteries are replaced.)
- When operating the unit via the ON/OFF TIMER, the actual length of operation may vary from the time entered by the user. (Maximum approximately 10 minutes)

■ **NIGHT SET mode**

- When the OFF TIMER is set, the air conditioner automatically adjusts the temperature setting (0.9°F (0.5°C) up in COOL, 3.6°F (2.0°C) down in HEAT) to prevent excessive cooling (heating) for your pleasant sleep.

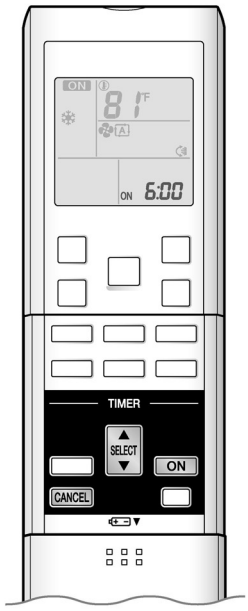

■ To use ON TIMER operation

• Check that the clock is correct.
If not, set the clock to the present time.

1. Press ON .

" 6:00 " is displayed.
" ON " blinks.

2. Press SELECT until the time setting reaches the point you like.

• Each pressing of either button increases or decreases the time setting by 10 minutes. Holding down either button changes the setting rapidly.

3. Press ON again.

• The TIMER lamp lights up.

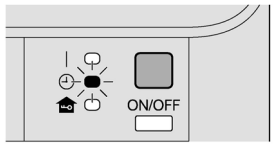

Display

■ To cancel ON TIMER operation

Press CANCEL .

• The TIMER lamp goes off.

■ To combine ON TIMER and OFF TIMER

• A sample setting for combining the two timers is shown below.

(Example)
Present time: 23:00 (The unit operating)
OFF TIMER at 0:00 } Combined
ON TIMER at 14:00

→ OFF 0:00 / ON 14:00

ATTENTION

■ **In the following cases, set the timer again.**

• After a breaker has turned off.
• After a power failure.
• After replacing batteries in the remote controller.

21

2.9 Note for Multi System

Note for Multi System

What is a multi system?

This system has one outdoor unit connected to multiple indoor units.

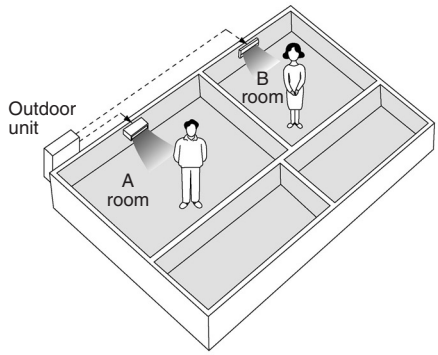

■ Selecting the operation mode

1. With the priority room setting present but inactive or not present.

When more than one indoor unit is operating, priority is given to the first unit that was turned on.
In this case, set the units that are turned on later to the same operation mode (*1) as the first unit.
Otherwise, they will enter the standby state, and the OPERATION lamp will flash: this does not indicate malfunction.
(*1)

- COOL, DRY and FAN operation may be used at the same time.
- AUTO operation automatically selects COOL operation or HEAT operation based on the room temperature. Therefore, AUTO operation is available when selecting the same operation mode as that of the room with the first unit to be turned on.

⚠ CAUTION

- Normally, the operation mode in the room where the unit is first run is given priority, but the following situations are exceptions, so please keep this in mind.
  If the operation mode of the first room is FAN operation, then using HEAT operation in any room after this will give priority to HEAT operation.
  In this situation, the air conditioner running in FAN operation will go on standby, and the OPERATION lamp will flash.

2. With the priority room setting active.

See priority room setting on the next page.

■ NIGHT QUIET mode (Available only for COOL operation)

NIGHT QUIET mode requires initial programming during installation. Please consult your retailer or dealer for assistance.
NIGHT QUIET mode reduces the operation noise of the outdoor unit during the nighttime hours to prevent annoyance to neighbors.

- The NIGHT QUIET mode is activated when the temperature drops 9°F (5°C) or more below the highest temperature recorded that day. Therefore, when the temperature difference is less than 9°F (5°C), this function will not be activated.
- NIGHT QUIET mode reduces slightly the cooling efficiency of the unit.

22

■ OUTDOOR UNIT QUIET operation ▶Page 17

1. With the priority room setting present but inactive or not present.

When using the OUTDOOR UNIT QUIET operation feature with the multi system, set all indoor units to OUTDOOR UNIT QUIET operation using their remote controllers.
When clearing OUTDOOR UNIT QUIET operation, clear one of the operating indoor units using its remote controller.
The OUTDOOR UNIT QUIET operation display remains on the remote controller for other rooms.
We recommend you release all rooms using their remote controllers.

2. With the priority room setting active.

See priority room setting.

■ COOL/HEAT mode lock (Available only for heat pump models)

The COOL/HEAT mode lock requires initial programming during installation. Please consult your authorized dealer for assistance.
The COOL/HEAT mode lock sets the unit forcibly to either COOL or HEAT operation. This function is convenient when you wish to set all indoor units connected to the multi system to the same operation mode.

■ Priority room setting

The priority room setting requires initial programming during installation. Please consult your authorized dealer for assistance.
The room designated as the priority room takes priority in the following situations;

1. Operation mode priority.

As the operation mode of the priority room takes precedence, the user can select a different operation mode from other rooms.
< Example >
* Room A is the priority room in the examples.
When COOL operation is selected in room A while operating the following modes in room B:

Operation mode in room B	Status of room B when the unit in room A is in COOL operation
COOL or DRY or FAN	Current operation mode maintained
HEAT	The unit enters standby mode. Operation resumes when the room A unit stops operating.
AUTO	If the unit is set to COOL operation, it continues. If the unit is set to HEAT operation, it enters standby mode. Operation resumes when the room A unit stops operating.

2. Priority when POWERFUL operation is used.

< Example >
* Room A is the priority room in the examples.
The indoor units in rooms A and B are all operating. If the unit in room A enters POWERFUL operation, operation capacity will be concentrated in room A. In such a case, the cooling (heating) efficiency of the units in room B may be slightly reduced.

3. Priority when using OUTDOOR UNIT QUIET operation.

< Example >
* Room A is the priority room in the examples.
Just by setting the unit in room A to QUIET operation, the air conditioner starts OUTDOOR UNIT QUIET operation.
You don't have to set all the operated indoor units to QUIET operation.

C: 3P232717-2C
C: 3P232717-3C

3. CTXS-L, FTXS-L Series

3.1 Remote Controller

Names of Parts

Remote Controller

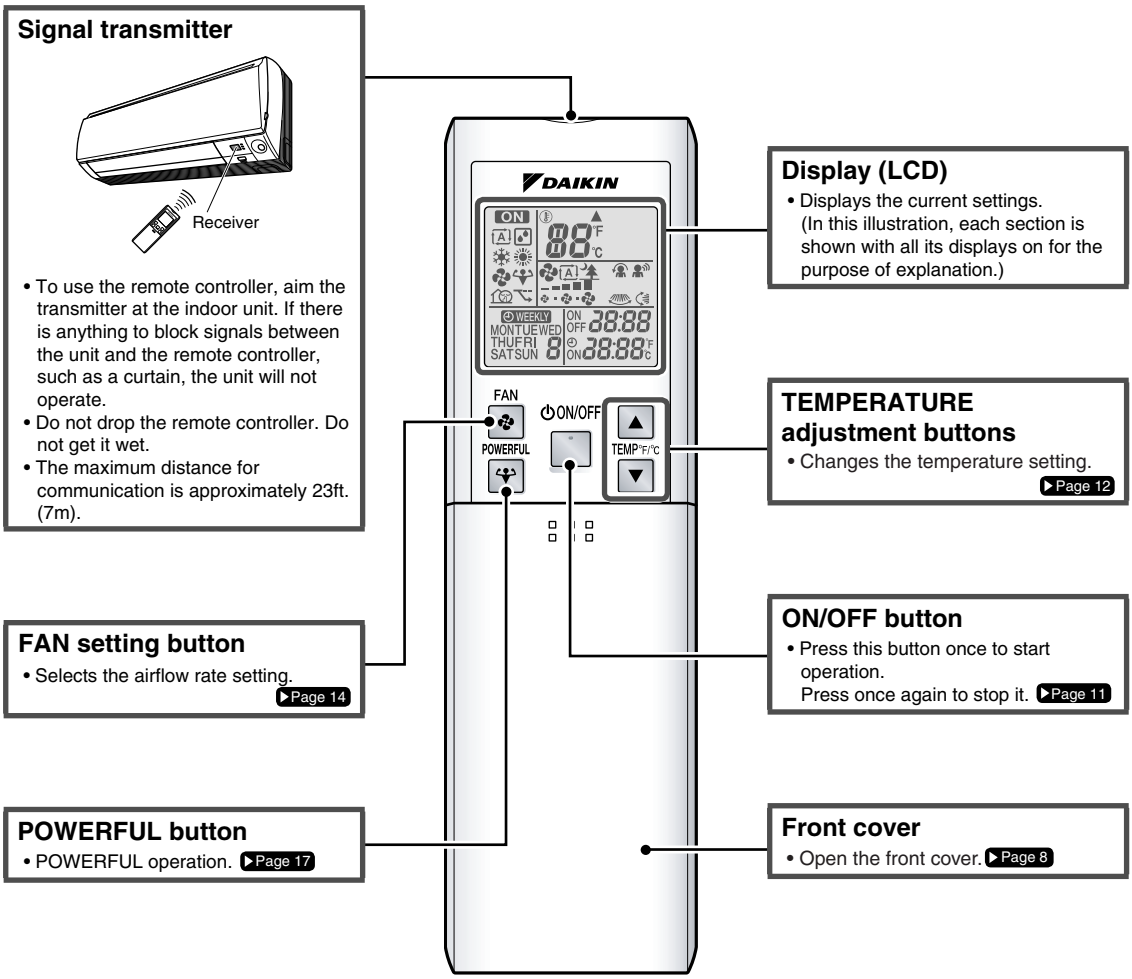

<ARC452A21>

7

■ Open the front cover

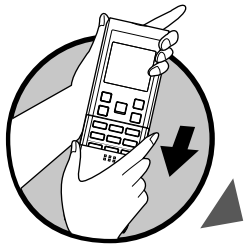

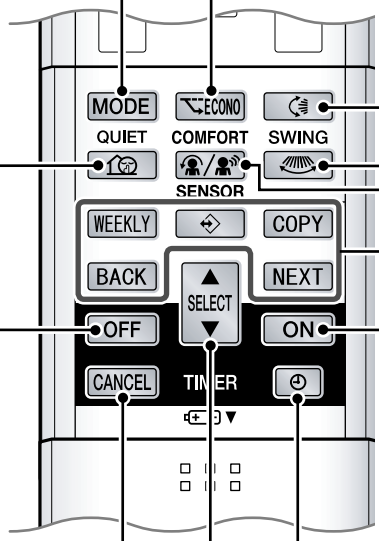

MODE selector button
- Selects the operation mode. (AUTO/DRY/COOL/HEAT/FAN) ▶Page 11

ECONO button
- ECONO operation. ▶Page 19

SWING button
- Adjusting the airflow direction. ▶Page 13

QUIET button
- OUTDOOR UNIT QUIET operation. ▶Page 18

COMFORT/SENSOR button
- COMFORT AIRFLOW and INTELLIGENT EYE operation. ▶Page 15,16

OFF TIMER button ▶Page 20

WEEKLY : **WEEKLY button**
: **PROGRAM button**
COPY : **COPY button**
BACK : **BACK button**
NEXT : **NEXT button**
- WEEKLY TIMER operation. ▶Page 22

TIMER CANCEL button
- Cancels the timer setting. ▶Page 20,21
- It cannot be used for the WEEKLY TIMER operation.

ON TIMER button ▶Page 21

SELECT button
- Changes the ON/OFF TIMER and WEEKLY TIMER settings. ▶Page 20,21,22

CLOCK button

8

3.2 AUTO · DRY · COOL · HEAT · FAN Operation

AUTO · DRY · COOL · HEAT · FAN Operation

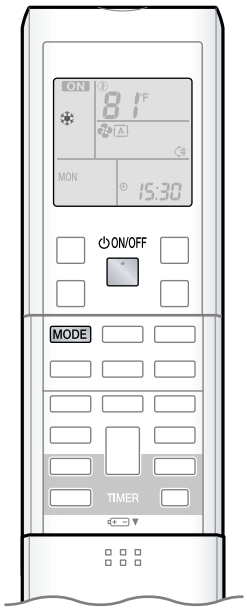

The air conditioner operates with the operation mode of your choice.
From the next time on, the air conditioner will operate with the same operation mode.

■ To start operation

1. Press MODE and select an operation mode.

- Each pressing of the button advances the mode setting in sequence.

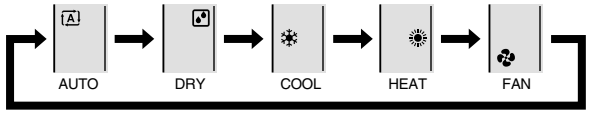

2. Press ON/OFF.

- "ON" is displayed on the LCD.
- The OPERATION lamp lights green.

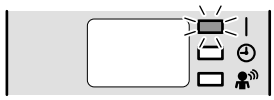

Display

■ To stop operation

Press ON/OFF again.

- "ON" is no longer displayed on the LCD.
- The OPERATION lamp goes off.

NOTE

MODE	Notes on each operation mode
HEAT	• Since this air conditioner heats the room by taking heat from outdoor air to indoors, the heating capacity becomes smaller in lower outdoor temperatures. If the heating effect is insufficient, it is recommended to use another heating appliance in combination with the air conditioner. • The heat pump system heats the room by circulating hot air around all parts of the room. After the start of HEAT operation, it takes some time before the room gets warmer. • In HEAT operation, frost may occur on the outdoor unit and lower the heating capacity. In that case, the system switches into defrosting operation to take away the frost. • During defrosting operation, hot air does not flow out of indoor unit.
COOL	• This air conditioner cools the room by releasing the heat in the room outside. Therefore, the cooling performance of the air conditioner may be degraded if the outdoor temperature is high.
DRY	• The computer chip works to rid the room of humidity while maintaining the temperature as much as possible. It automatically controls temperature and airflow rate, so manual adjustment of these functions is unavailable.
AUTO	• In AUTO operation, the system selects an appropriate operation mode (COOL or HEAT) based on the room and outside temperatures and starts the operation. • The system automatically reselects setting at a regular interval to bring the room temperature to user-setting level.
FAN	• This mode is valid for fan only.

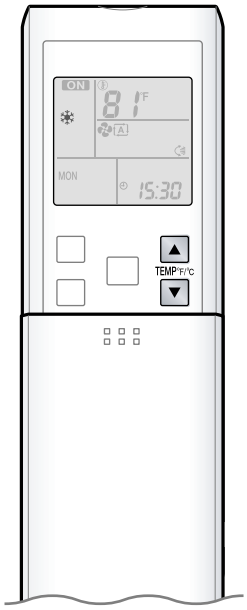

■ To change the temperature setting

Press ▲ (TEMP°F/°C) or ▼ (TEMP°F/°C).

- The displayed items on the LCD will change whenever either one of the buttons is pressed.

COOL operation	HEAT operation	AUTO operation	DRY or FAN operation
64-90˚F (18-32˚C)	50-86˚F (10-30˚C)	64-86˚F (18-30˚C)	The temperature setting is not variable.
Press ▲ to raise the temperature and press ▼ to lower the temperature.			

■ Operating conditions

■ Recommended temperature setting

- For cooling: 78-82˚F (26-28˚C)
- For heating: 68-75˚F (20-24˚C)

■ Tips for saving energy

- Be careful not to cool (heat) the room too much.
  Keeping the temperature setting at a moderate level helps save energy.
- Cover windows with a blind or a curtain.
  Blocking sunlight and air from outdoors increases the cooling (heating) effect.
- Clogged air filters cause inefficient operation and waste energy. Clean them once in about every 2 weeks.

■ Notes on the operating conditions

- The air conditioner always consumes a small amount of electricity even while it is not operating.
- If you are not going to use the air conditioner for a long period, for example in spring or autumn, turn the breaker off.
- Use the air conditioner in the following conditions.

MODE	Operating conditions	If operation is continued out of this range
COOL	Outdoor temperature : 50-115˚F (10-46˚C) Indoor temperature : 64-90˚F (18-32˚C) Indoor humidity : 80% max.	• A safety device may work to stop the operation. (In multi system, it may work to stop the operation of the outdoor unit only.) • Condensation may occur on the indoor unit and drip.
HEAT	Outdoor temperature : 5-75˚F (–15-24˚C) Indoor temperature : 50-86˚F (10-30˚C)	• A safety device may work to stop the operation.
DRY	Outdoor temperature : 50-115˚F (10-46˚C) Indoor temperature : 64-90˚F (18-32˚C) Indoor humidity : 80% max.	• A safety device may work to stop the operation. • Condensation may occur on the indoor unit and drip.

- Operation outside this humidity or temperature range may cause a safety device to disable the system.

12

3.3 Adjusting the Airflow Direction and Rate

Adjusting the Airflow Direction and Rate

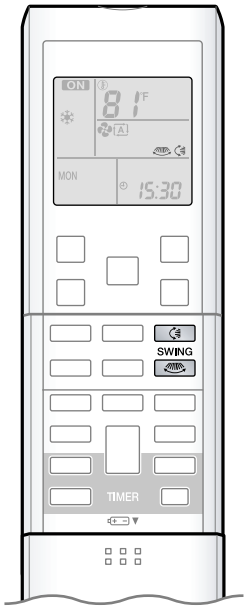

You can adjust the airflow direction to increase your comfort.

■ To start auto swing

Upper and lower airflow direction

Press [ ] .

- " " is displayed on the LCD.
- The louvers (horizontal blades) will begin to swing.

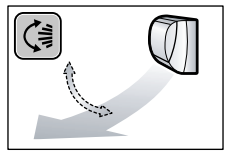

Right and left airflow direction

Press [ ] .

- " " is displayed on the LCD.
- The fins (vertical blades) will begin to swing.

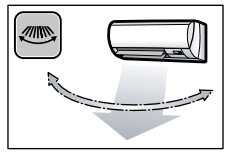

The 3-D airflow direction

Press [ ] and [ ] .

- " " and " " are displayed on the LCD.
- The louvers and fins move in turn.
- To cancel 3-D airflow, press either [ ] or [ ] again. The louvers or fins will stop moving.

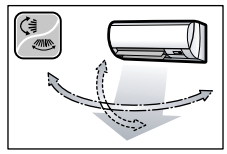

■ To set the louvers or fins at desired position

- This function is effective while louvers or fins are in auto swing mode.

Press [ ] and [ ] when the louvers or fins have reached the desired position.

- In the 3-D airflow, the louvers and fins move in turn.
- " " or " " is no longer displayed on the LCD.

13

CTXS07LVJU, FTXS09/12LVJU

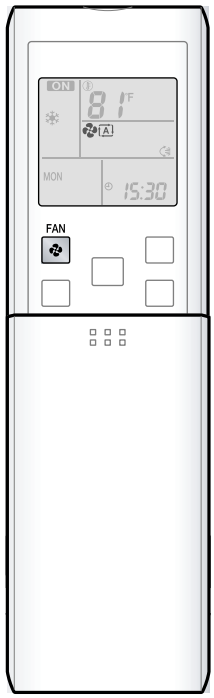

■ To adjust the airflow rate setting

Press .

• Each pressing of advances the airflow rate setting in sequence.

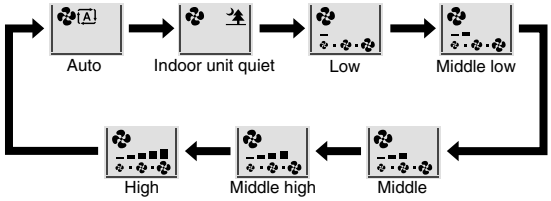

• When the airflow is set to " ", indoor unit quiet operation will start and the noise from the unit will become quieter.
• In indoor unit quiet operation, the airflow rate is set to a weak level.
• In DRY operation, the airflow rate setting is not variable.

NOTE

■ **Notes on the angles of the louvers**
• The louvers swinging range depends on the operation. (See the figure.)

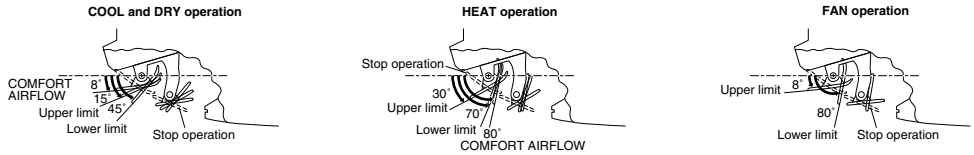

■ **Note on 3-D airflow**
• Using 3-D airflow circulates cold air, which tends to collected at the bottom of the room, and hot air, which tends to collect near the ceiling, throughout the room, preventing areas of cold and hot developing.

■ **Note on airflow rate setting**
• At smaller airflow rates, the cooling (heating) effect is also smaller.

⚠ CAUTION

• Always use a remote controller to adjust the angles of the louvers and fins. If you attempt to move the louvers and fins forcibly with hand when they are swinging, the mechanism may be broken.
• Always use a remote controller to adjust the fins angles. Inside the air outlet, a fan is rotating at a high speed.

14

FTXS15/18LVJU

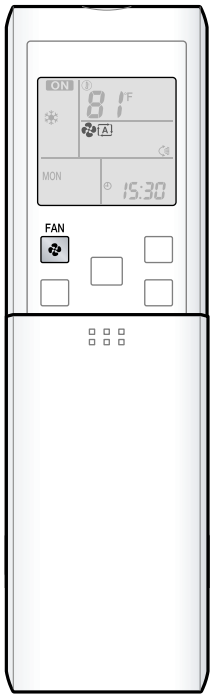

■ To adjust the airflow rate setting

Press .

- Each pressing of advances the airflow rate setting in sequence.

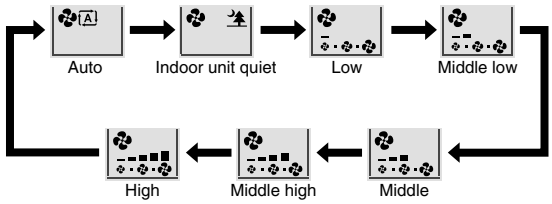

- When the airflow is set to “ ”, indoor unit quiet operation will start and the noise from the unit will become quieter.
- In indoor unit quiet operation, the airflow rate is set to a weak level.
- In DRY operation, the airflow rate setting is not variable.

NOTE

■ **Notes on the angles of the louvers**

- The louvers swinging range depends on the operation. (See the figure.)

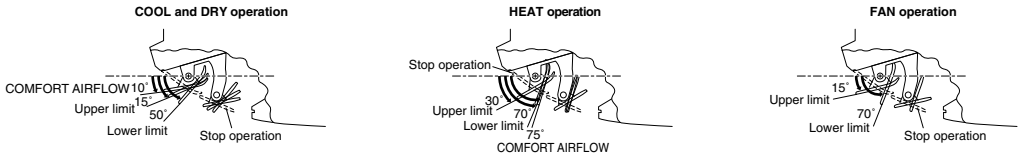

■ **Note on 3-D airflow**

- Using 3-D airflow circulates cold air, which tends to collected at the bottom of the room, and hot air, which tends to collect near the ceiling, throughout the room, preventing areas of cold and hot developing.

■ **Note on airflow rate setting**

- At smaller airflow rates, the cooling (heating) effect is also smaller.

⚠ CAUTION

- Always use a remote controller to adjust the angles of the louvers and fins. If you attempt to move the louvers and fins forcibly with hand when they are swinging, the mechanism may be broken.
- Always use a remote controller to adjust the fins angles. Inside the air outlet, a fan is rotating at a high speed.

14

3.4 COMFORT AIRFLOW / INTELLIGENT EYE Operation

COMFORT AIRFLOW / INTELLIGENT EYE Operation

■ COMFORT AIRFLOW operation

The flow of air will be in the upward direction while in COOL operation and in the downward direction while in HEAT operation, providing comfortable cool or warm air that does not come in direct contact with people.

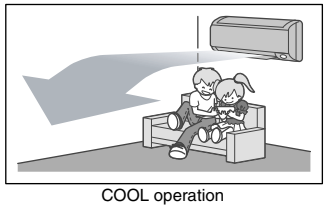

COOL operation

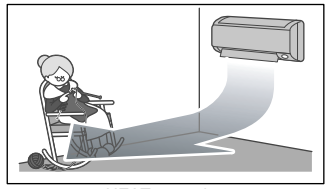

HEAT operation

■ INTELLIGENT EYE operation

"INTELLIGENT EYE" is the infrared sensor which detects the human movement.
If no one is in the room for more than 20 minutes, the operation automatically changes to energy saving operation.

[Example]

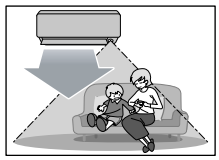

When someone is in the room

■ **Normal operation**

- The air conditioner is in normal operation while the sensor is detecting the movement of people.

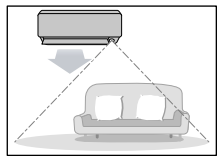

When no one is in the room

■ **20 minutes after, start energy saving operation.**

- The set temperature is shifted in ±3.6˚F (±2˚C) steps.

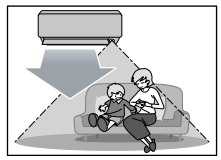

Someone is back in the room

■ **Back to normal operation.**

- The air conditioner will return to normal operation when the sensor detects the movement of people again.

INTELLIGENT EYE operation is useful for energy saving

■ **Energy saving operation**

- If no presence detected in the room for 20 minutes, the energy saving operation will start.
- This operation changes the temperature –3.6˚F (–2˚C) in HEAT / +3.6˚F (+2˚C) in COOL / +3.6˚F (+2˚C) in DRY operation from set temperature. When the room temperature exceeds 86˚F (30˚C), the operation changes the temperature +1.8˚F (+1˚C) in COOL / +1.8˚F (+1˚C) in DRY operation from set temperature.
- This operation decreases the airflow rate slightly in FAN mode only.

■ Combination COMFORT AIRFLOW and INTELLIGENT EYE operation

The air conditioner can go into operation with the COMFORT AIRFLOW and INTELLIGENT EYE functions combined.

15

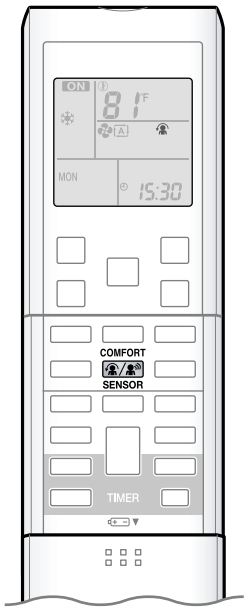

■ To start operation

Press [COMFORT AIRFLOW / INTELLIGENT EYE] and select the desired mode.

- Each time the [COMFORT AIRFLOW / INTELLIGENT EYE] is pressed a different setting option is displayed on the LCD.
- The INTELLIGENT EYE lamp lights green.

Display

- By selecting "COMFORT AIRFLOW / INTELLIGENT EYE" from the following icons, the air conditioner will be in COMFORT AIRFLOW operation combined with INTELLIGENT EYE operation.

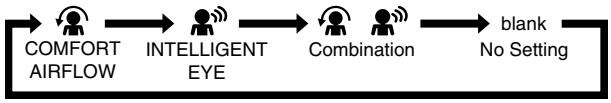

- When the louvers (horizontal blades) are swinging, the operating as above will stop movement of them.
- The lamp will be lit while human movements are detected.

■ To cancel operation

Press [COMFORT AIRFLOW / INTELLIGENT EYE] and select "blank" on the LCD.

- The INTELLIGENT EYE lamp goes off.

NOTE

■ Notes on COMFORT AIRFLOW operation

- The louver position will change, preventing air from blowing directly on the occupants of the room.
- POWERFUL operation and COMFORT AIRFLOW operation cannot be used at the same time.
  Priority is given to the function of whichever button is pressed last.
- The airflow rate will be set to AUTO. If the upper and lower airflow direction is selected, the COMFORT AIRFLOW function will be canceled.

■ Notes on INTELLIGENT EYE operation

- Application range is as follows.

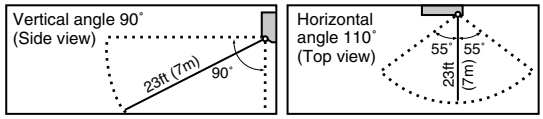

- Sensor may not detect moving objects further than 23ft (7m) away. (Check the application range)
- Sensor detection sensitivity changes according to indoor unit location, the speed of passersby, temperature range, etc.
- The sensor also mistakenly detects pets, sunlight, fluttering curtains and light reflected off of mirrors as passersby.
- INTELLIGENT EYE operation will not go on during POWERFUL operation.
- NIGHT SET mode ▶Page 20 will not go on during use of INTELLIGENT EYE operation.

■ Notes on combination of COMFORT AIRFLOW operation and INTELLIGENT EYE operation

- The airflow rate will be set to AUTO. If the upper and lower airflow direction is selected, the COMFORT AIRFLOW operation will be canceled.
  Priority is given to the function of whichever button is pressed last.

⚠ CAUTION

- Do not place large objects near the sensor.
  Also keep heating units or humidifiers outside the sensor's detection area. This sensor can detect undesirable objects.
- Do not hit or forcefully push the INTELLIGENT EYE sensor. This can lead to damage and malfunction.

3.5 POWERFUL Operation

POWERFUL Operation

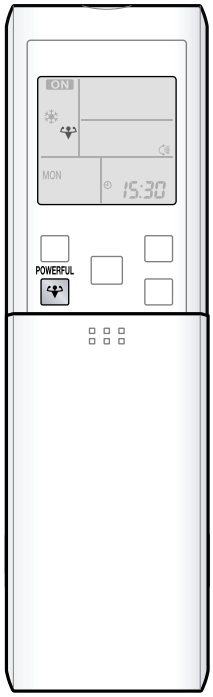

POWERFUL operation quickly maximizes the cooling (heating) effect in any operation mode. You can get the maximum capacity.

■ To start POWERFUL operation

Press [POWERFUL] during operation.

- POWERFUL operation ends in 20 minutes. Then the system automatically operates again with the previous settings which were used before POWERFUL operation.
- "POWERFUL" is displayed on the LCD.

■ To cancel POWERFUL operation

Press [POWERFUL] again.

- "POWERFUL" is no longer displayed on the LCD.

[Example]

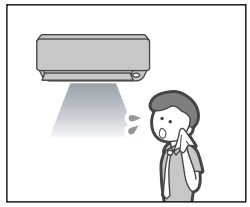

■ Normal operation
- When you want to get the cooling effect quickly, start the POWERFUL operation.

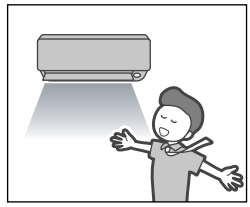

■ POWERFUL operation
- POWERFUL operation will work for 20 minutes.

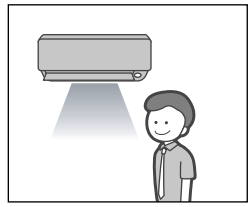

■ Back to normal operation

NOTE

■ Notes on POWERFUL operation

- When using POWERFUL operation, there are some functions which are not available.
- POWERFUL operation cannot be used together with ECONO, COMFORT AIRFLOW or OUTDOOR UNIT QUIET operation. Priority is given to the function of whichever button is pressed last.
- POWERFUL operation can only be set when the unit is running. Pressing [ON/OFF] causes the settings to be canceled, and "POWERFUL" is no longer displayed on the LCD.
- POWERFUL operation will not increase the capacity of the air conditioner if the air conditioner is already in operation with its maximum capacity demonstrated.
- **In COOL, HEAT and AUTO operation**
  To maximize the cooling (heating) effect, the capacity of outdoor unit is increased and the airflow rate is fixed to the maximum setting. The temperature and airflow settings are not variable.
- **In DRY operation**
  The temperature setting is lowered by 4.5˚F (2.5˚C) and the airflow rate is slightly increased.
- **In FAN operation**
  The airflow rate is fixed to the maximum setting.

17

3.6 OUTDOOR UNIT QUIET Operation

OUTDOOR UNIT QUIET Operation

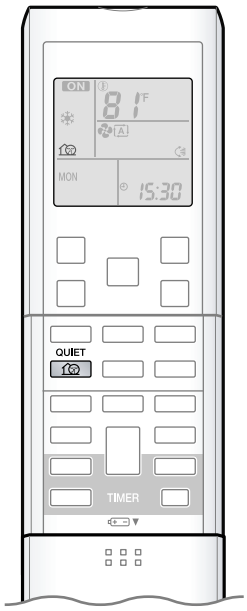

OUTDOOR UNIT QUIET operation lowers the noise level of the outdoor unit by changing the frequency and fan speed on the outdoor unit. This function is convenient during the night.

■ To start OUTDOOR UNIT QUIET operation

Press .

- "" is displayed on the LCD.

■ To cancel OUTDOOR UNIT QUIET operation

Press again.

- "" is no longer displayed on the LCD.

[Example] Using the OUTDOOR UNIT QUIET operation during the night.

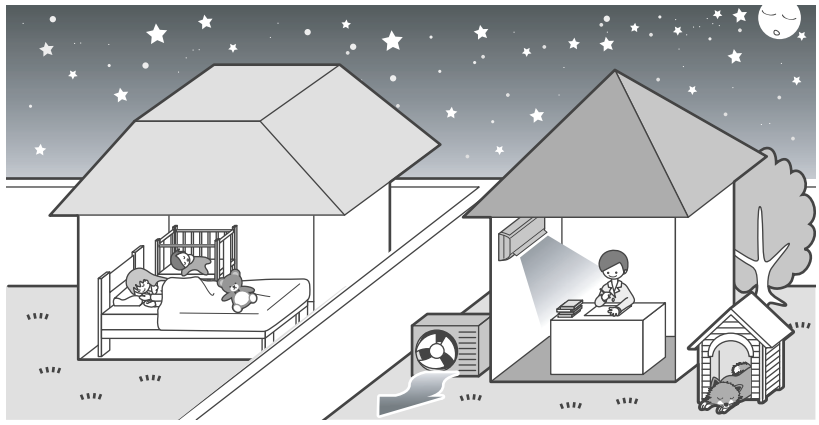

- The sound level of the outdoor unit will be lower.
  This is convenient in consideration of your neighbors.

NOTE

■ **Notes on OUTDOOR UNIT QUIET operation**

- If using a multi system, the OUTDOOR UNIT QUIET operation will work only when this function is set on all operated indoor units. However, if using priority room setting, refer to "Note for multi system". ▶Page 28
- This function is available in COOL, HEAT, and AUTO operation.
  This is not available in FAN and DRY operation.
- POWERFUL operation and OUTDOOR UNIT QUIET operation cannot be used at the same time.
  Priority is given to the function of whichever button is pressed last.
- Even the operation is stopped using the remote controller or the indoor unit ON/OFF switch when using OUTDOOR UNIT QUIET operation, "" will remain on the remote controller display.
- OUTDOOR UNIT QUIET operation will drop neither the frequency nor fan speed if they have been already dropped low enough.

3.7 ECONO Operation

ECONO Operation

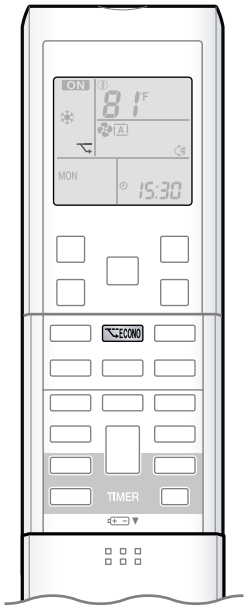

ECONO operation is a function which enables efficient operation by limiting the maximum power consumption value.
This function is useful for cases in which attention should be paid to ensure a circuit breaker will not trip when the product runs alongside other appliances.

■ To start ECONO operation

Press ECONO during operation.

- " " is displayed on the LCD.

■ To cancel ECONO operation

Press ECONO again.

- " " is no longer displayed on the LCD.

[Example]

Normal operation

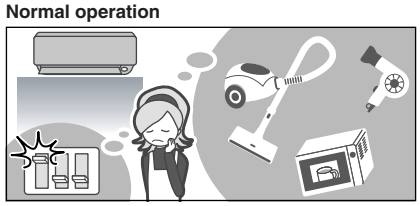

- In case the air conditioner and other appliances which require high power consumption are used at same time, a circuit breaker may trip if the air conditioner operate with its maximum capacity.

ECONO operation

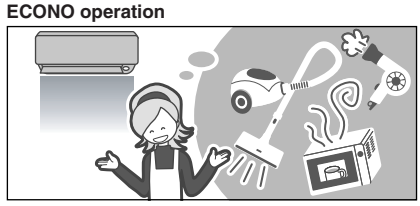

- The maximum power consumption of the air conditioner is limited by using ECONO operation. The circuit breaker is unlikely to trip even if the air conditioner and other appliances are used at same time.

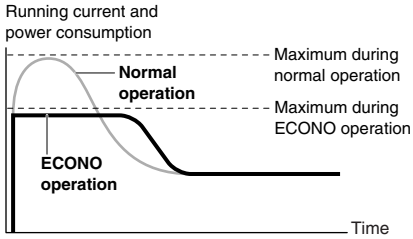

From start up until set temperature is reached

- This diagram is a representation for illustrative purposes only.
  The maximum running current and power consumption of the air conditioner in ECONO operation vary with the connecting outdoor unit.

NOTE

■ Notes on ECONO operation

- ECONO operation can only be set when the unit is running. Pressing ON/OFF causes the settings to be canceled, and " " is no longer displayed on the LCD.
- ECONO operation functions in AUTO, COOL, DRY, and HEAT operation.
- POWERFUL and ECONO operation cannot be used at the same time.
  Priority is given to the function of whichever button is pressed last.
- If the level of power consumption is already low, ECONO operation will not drop the power consumption.

19

3.8 OFF TIMER Operation

OFF TIMER Operation

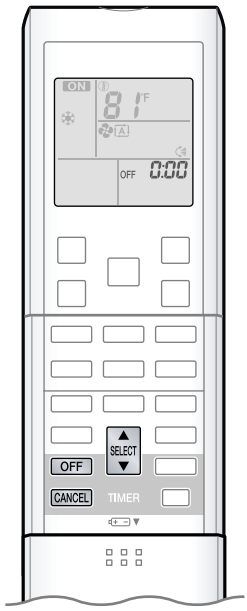

Timer functions are useful for automatically switching the air conditioner on or off at night or in the morning. You can also use OFF TIMER and ON TIMER in combination.

■ To use OFF TIMER operation

- Check that the clock is correct.
  If not, set the clock to the present time.

1. Press OFF .

" 0:00 " is displayed on the LCD.
" OFF " blinks.

- " ◷ " is no longer displayed on the LCD.

2. Press SELECT until the time setting reaches the point you like.

- Each pressing of either button increases or decreases the time setting by 10 minutes. Holding down either button changes the time setting rapidly.

3. Press OFF again.

- " OFF " and setting time are displayed on the LCD.
- The TIMER lamp lights yellow.

Display

■ To cancel OFF TIMER operation

Press CANCEL .

- " OFF " and setting time are no longer displayed on the LCD.
- " ◷ " and day of the week are displayed on the LCD.
- The TIMER lamp goes off.

NOTE

■ **Notes on TIMER operation**
- When TIMER is set, the present time is not displayed.
- Once you set ON/OFF TIMER, the time setting is kept in the memory. The memory is canceled when remote controller batteries are replaced.
- When operating the unit via the ON/OFF TIMER, the actual length of operation may vary from the time entered by the user. (Maximum approximately 10 minutes)

■ **NIGHT SET mode**
- When the OFF TIMER is set, the air conditioner automatically adjusts the temperature setting (0.9˚F (0.5˚C) up in COOL, 3.6˚F (2.0˚C) down in HEAT) to prevent excessive cooling (heating) for your pleasant sleep.

3.9 ON TIMER Operation

ON TIMER Operation

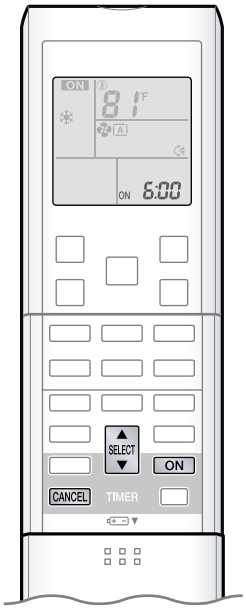

■ To use ON TIMER operation

- Check that the clock is correct.
  If not, set the clock to the present time.

1. Press ON .

"6:00" is displayed on the LCD.
"ON" blinks.

- "⏲" and day of the week are no longer displayed on the LCD.

2. Press SELECT until the time setting reaches the point you like.

- Each pressing of either button increases or decreases the time setting by 10 minutes.
  Holding down either button changes the setting rapidly.

3. Press ON again.

- "ON" and setting time are displayed on the LCD.
- The TIMER lamp lights yellow.

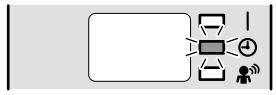

Display

■ To cancel ON TIMER operation

Press CANCEL .

- "ON" and setting time are no longer displayed on the LCD.
- "⏲" and day of the week are displayed on the LCD.
- The TIMER lamp goes off.

■ To combine ON TIMER and OFF TIMER

- A sample setting for combining the 2 timers is shown below.

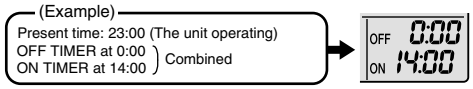

NOTE

■ **In the following cases, set the timer again.**
- After a breaker has turned off.
- After a power failure.
- After replacing batteries in the remote controller.

21

3.10 WEEKLY TIMER Operation

WEEKLY TIMER Operation

Up to 4 timer settings can be saved for each day of the week. It is convenient if the WEEKLY TIMER is set according to the family's life style.

■ Using in these cases of WEEKLY TIMER

Example: The same timer settings are made for the week from Monday through Friday while different timer settings are made for the weekend.

[Monday]	Make timer settings up to programs 1-4. ▶Page 23 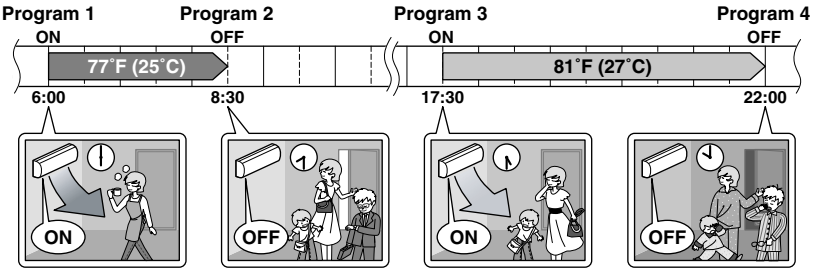
[Tuesday] to [Friday]	Use the copy mode to make settings for Tuesday to Friday, because these settings are the same as those for Monday. ▶Page 25 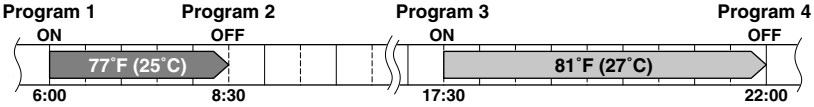
[Saturday]	No timer settings
[Sunday]	Make timer settings up to programs 1-4. ▶Page 23 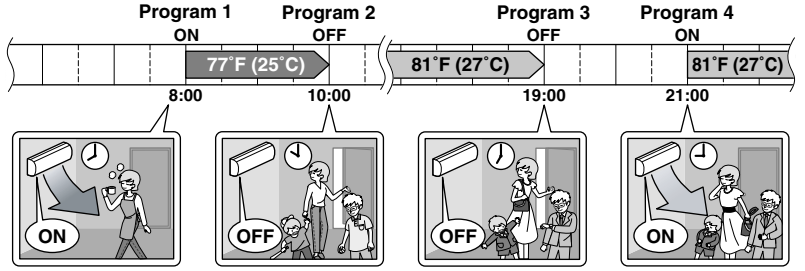

- Up to 4 reservations per day and 28 reservations per week can be set in the WEEKLY TIMER. The effective use of the copy mode ensures ease of making reservations.
- The use of ON-ON-ON-ON settings, for example, makes it possible to schedule operating mode and set temperature changes. Furthermore, by using OFF-OFF-OFF-OFF settings, only the turn off time of each day can be set. This will turn off the air conditioner automatically if the user forgets to turn it off.

WEEKLY TIMER Operation

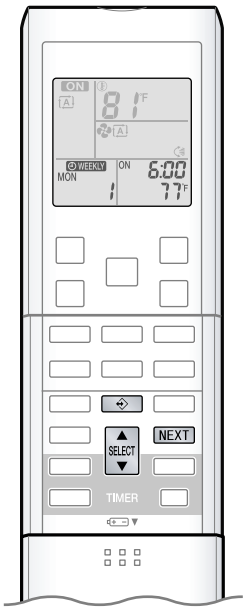

■ To use WEEKLY TIMER operation

Setting mode

• Make sure the day of the week and time are set. If not, set the day of the week and time.

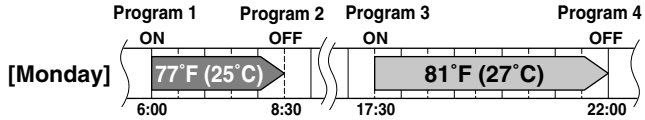

Setting Displays

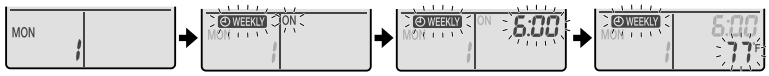

Day and number settings | ON/OFF settings | Time settings | Temperature settings

1. Press [⇔] .

• The day of the week and the reservation number of the current day will be displayed.
• 1 to 4 settings can be made per day.

2. Press [SELECT] to select the desired day of the week and reservation number.

• Pressing [SELECT] changes the reservation number and the day of the week.

3. Press [NEXT] .

• The day of the week and reservation number will be set.
• "WEEKLY" and "ON" blink.

4. Press [SELECT] to select the desired mode.

• Pressing [SELECT] changes "ON" or "OFF" setting in sequence.

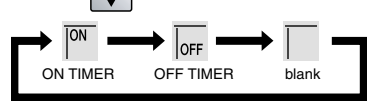

• In case the reservation has already been set, selecting "blank" deletes the reservation.
• Go to **STEP 9** if "blank" is selected.

5. Press [NEXT] .

• The ON/OFF TIMER mode will be set.
• "WEEKLY" and the time blink.

23

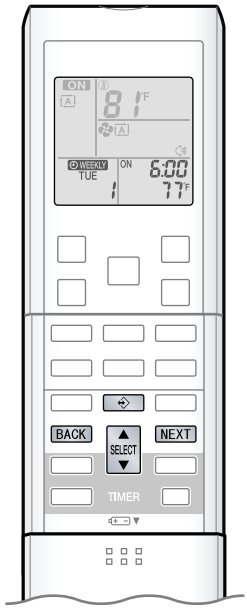

6. Press SELECT to select the desired time.

- The time can be set between 0:00 and 23:50 in 10 minute intervals.
- To return to the ON/OFF TIMER mode setting, press BACK .
- Go to **STEP 9** when setting the OFF TIMER.

7. Press NEXT .

- The time will be set.
- " WEEKLY " and the temperature blink.

8. Press SELECT to select the desired temperature.

- The temperature can be set between 50˚F (10˚C) and 90˚F (32˚C).
  Cooling: The unit operates at 64˚F (18˚C) even if it is set at 50 (10) to 63˚F (17˚C).
  Heating: The unit operates at 86˚F (30˚C) even if it is set at 87 (31) to 90˚F (32˚C).
- To return to the time setting, press BACK .
- The set temperature is only displayed when the mode setting is on.

9. Press NEXT .

- The temperature will be set and go to the next reservation setting.
- To continue further settings, repeat the procedure from **STEP 4**.

10. Press to complete the setting.

- Be sure to direct the remote controller toward the indoor unit and check for a receiving tone and flashing the OPERATION lamp.
- " WEEKLY" is displayed on the LCD and WEEKLY TIMER operation is activated.
- The TIMER lamp lights yellow.

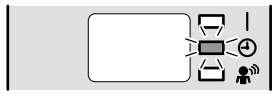

Display

- A reservation made once can be easily copied and the same settings used for another day of the week. Refer to **Copy mode** . ▶Page 25

NOTE

■ **Notes on WEEKLY TIMER operation**

- Do not forget to set the clock on the remote controller first.
- The day of the week, ON/OFF TIMER mode, time and set temperature (only for ON TIMER mode) can be set with WEEKLY TIMER. Other settings for ON TIMER are based on the settings just before the operation.
- Both WEEKLY TIMER and ON/OFF TIMER operation cannot be used at the same time. The ON/OFF TIMER operation has priority if it is set while WEEKLY TIMER is still active. The WEEKLY TIMER will go into standby state, and " WEEKLY " will be no longer displayed on the LCD. When ON/OFF TIMER is up, the WEEKLY TIMER will automatically become active.
- Only the time and set temperature with the WEEKLY TIMER are sent with the . Set the WEEKLY TIMER only after setting the operation mode, the airflow rate and the airflow direction ahead of time.
- Shutting the breaker off, power failure, and other similar events will render operation of the indoor unit's internal clock inaccurate. Reset the clock.
- The BACK can be used only for the time and temperature settings. It cannot be used to go back to the reservation number.

WEEKLY TIMER Operation

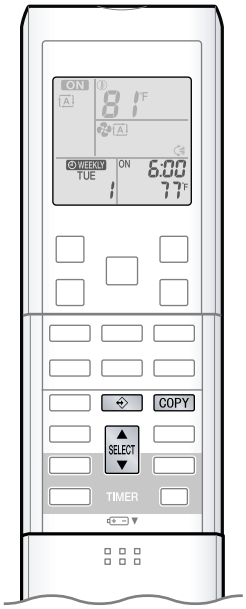

Copy mode

- A reservation made once can be copied to another day of the week. The whole reservation of the selected day of the week will be copied.

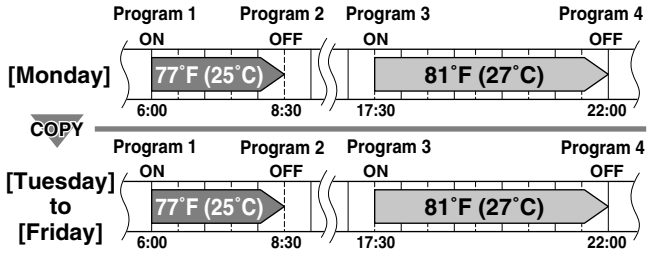

Setting Displays

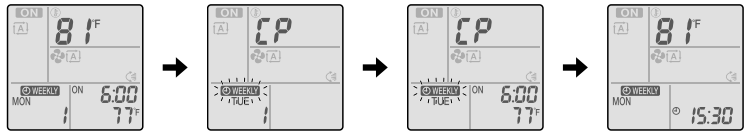

1. Press [⇔] .

2. Press [SELECT ▲▼] to confirm the day of the week to be copied.

3. Press [COPY] .

- The whole reservation of the selected day of the week will be copied.

4. Press [SELECT ▲▼] to select the destination day of the week.

5. Press [COPY] .

- The reservation will be copied to the selected day of the week. The whole reservation of the selected day of the week will be copied.
- To continue copying the settings to other days of the week, repeat **STEP 4** and **STEP 5**.

6. Press [⇔] to complete the setting.

- "WEEKLY" is displayed on the LCD and WEEKLY TIMER operation is activated.

NOTE

■ **Note on COPY MODE**

- The entire reservation of the source day of the week is copied in the copy mode.
  In the case of making a reservation change for any day of the week individually after copying the content of weekly reservations, press [⇔] and change the settings in the steps of **Setting mode** . ▶Page 23

25

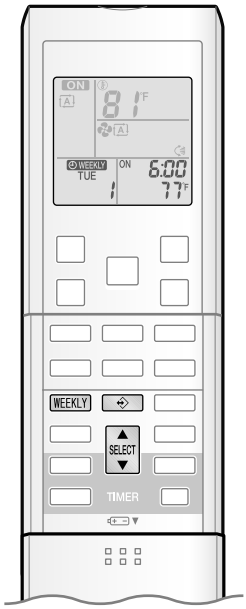

■ Confirming a reservation

• The reservation can be confirmed.

Setting Displays

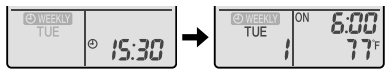

Normal display Confirmation display

1. Press [⇔] .

• The day of the week and the reservation number of current day will be displayed.

2. Press [SELECT ▲▼] to select the day of the week and the reservation number to be confirmed.

• Pressing [SELECT ▲▼] displays the reservation details.

• To change the confirmed reserved settings, select the reservation number and press [NEXT].
The mode is switched to setting mode. Go to **Setting mode** **STEP 4.** ▶Page 23

3. Press [⇔] to exit confirming mode.

• "WEEKLY" is displayed on the LCD and WEEKLY TIMER operation is activated.
• The TIMER lamp lights yellow.

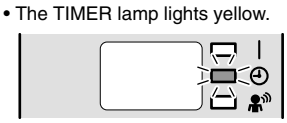

Display

■ To deactivate WEEKLY TIMER operation

Press [WEEKLY] while "WEEKLY" is displayed on the LCD.

• "WEEKLY" will be no longer displayed on the LCD.
• The TIMER lamp goes off.
• To reactivate the WEEKLY TIMER operation, press [WEEKLY] again.
• If a reservation deactivated with [WEEKLY] is activated once again, the last reservation mode will be used.

WEEKLY TIMER Operation

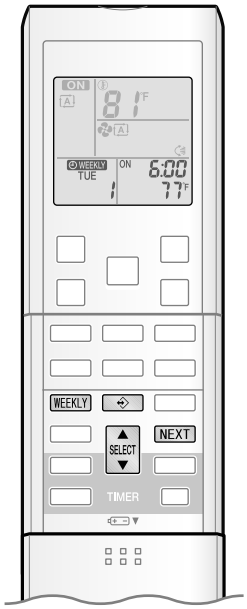

■ To delete reservations

The individual reservation

1. Press [⇔].

- The day of the week and the reservation number will be displayed.

2. Press [SELECT] to select the day of the week and the reservation number to be deleted.

3. Press [NEXT].

- " WEEKLY " and "ON" or "OFF" blink.

4. Press [SELECT] and select " blank ".

- Pressing [SELECT] changes ON/OFF TIMER mode.
- The reservation has no setting when selecting "blank".

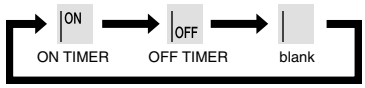

5. Press [NEXT].

- The selected reservation will be deleted.

6. Press [⇔].

- If there are still other reservations, WEEKLY TIMER operation will be activated.

The reservations for each day of the week

- This function can be used for deleting reservations for each day of the week.
- It can be used while confirming or setting reservations.

1. Press [SELECT] to select the day of the week to be deleted.

2. Hold [WEEKLY] for 5 seconds.

- The reservation of the selected day of the week will be deleted.

All reservations

Hold [WEEKLY] for 5 seconds while normal display.

- Be sure to direct the remote controller toward the indoor unit and check for a receiving tone.
- This operation is not effective on the setting display of WEEKLY TIMER.
- All reservations will be deleted.

3.11 Note for Multi System

Note for Multi System

Multi system has one outdoor unit connected to multiple indoor units.

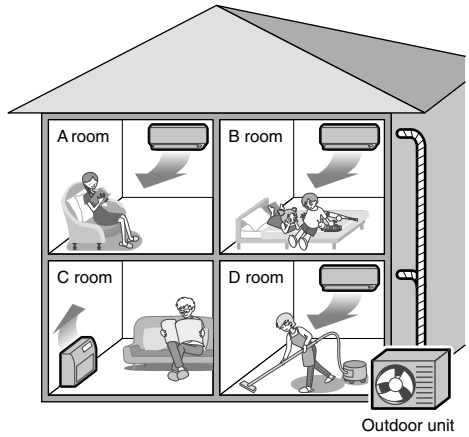

■ Selecting the operation mode

With the priority room setting present but inactive or not present.

When more than one indoor unit is operating, priority is given to the first unit that was turned on.
In this case, set the units that are turned on later to the same operation mode as the first unit.
Otherwise, they will enter the standby state, and the OPERATION lamp will flash: this does not indicate malfunction.

NOTE

■ **Notes on operation mode for multi system**
- COOL, DRY and FAN operation may be used at the same time.
- AUTO operation automatically selects COOL operation or HEAT operation based on the room temperature.
  Therefore, AUTO operation is available when selecting the same operation mode as that of the room with the first unit to be turned on.

⚠ CAUTION

- Normally, the operation mode in the room where the unit is first run is given priority, but the following situations are exceptions, so please keep this in mind.
  If the operation mode of the first room is **FAN operation**, then using **HEAT operation** in any room after this will give priority to **HEAT operation**. In this situation, the air conditioner running in FAN operation will go on standby, and the OPERATION lamp will flash.

With the priority room setting active.

Refer to "**Priority room setting**" on the next page.

■ NIGHT QUIET mode (Available only for COOL operation)

NIGHT QUIET mode requires initial programming during installation. Please consult your retailer or dealer for assistance.
NIGHT QUIET mode reduces the operation noise of the outdoor unit during the nighttime hours to prevent annoyance to neighbors.
- The NIGHT QUIET mode is activated when the temperature drops 10.8˚F (6˚C) or more below the highest temperature recorded that day.
  Therefore, when the temperature difference is less than 7.2˚F (4˚C), this function will not be activated.
- NIGHT QUIET mode reduces slightly the cooling efficiency of the unit.

■ OUTDOOR UNIT QUIET operation

Refer to "**OUTDOOR UNIT QUIET operation**". ▶ Page 18

With the priority room setting present but inactive or not present.

When using the OUTDOOR UNIT QUIET operation feature with the Multi system, set all indoor units to OUTDOOR UNIT QUIET operation using their remote controllers.
When clearing OUTDOOR UNIT QUIET operation, clear one of the operating indoor units using their remote controller.
However OUTDOOR UNIT QUIET operation display remains on the remote controller for other rooms.
We recommend you release all rooms using their remote controllers.

With the priority room setting active.

Refer to "**Priority room setting**" on the next page.

Note for Multi System

■ COOL / HEAT mode lock

The COOL / HEAT mode lock requires initial programming during installation. Please consult your authorized dealer for assistance. The COOL / HEAT mode lock sets the unit forcibly to either COOL or HEAT operation. This function is convenient when you wish to set all indoor units connected to the multi system to the same operation mode.

■ Priority room setting

The priority room setting requires initial programming during installation. Please consult your authorized dealer for assistance. The room designated as the priority room takes priority in the following situations.

Operation mode priority

- As the operation mode of the priority room takes precedence, the user can select a different operation mode from other rooms.

[Example]

- Room A is the priority room in the examples.
  When COOL operation is selected in room A while operating the following modes in room B, C and D :

Operation mode in room B, C and D	Status of room B, C and D when the unit in room A is in COOL operation
COOL or DRY or FAN	Current operation mode maintained
HEAT	The unit enters standby mode. Operation resumes when the room A unit stops operating.
AUTO	If the unit is set to COOL operation, it continues. If the unit is set to HEAT operation, it enters standby mode. Operation resumes when the room A unit stops operating.

Priority when POWERFUL operation is used

[Example]

- Room A is the priority room in the examples.
  The indoor units in rooms A, B, C and D are all operating. If the unit in room A enters POWERFUL operation, operation capacity will be concentrated in room A. In such a case, the cooling (heating) efficiency of the units in room B, C and D may be slightly reduced.

Priority when using OUTDOOR UNIT QUIET operation

[Example]

- Room A is the priority room in the examples.
  Just by setting the unit in room A to QUIET operation, the air conditioner starts OUTDOOR UNIT QUIET operation.
  You don't have to set all the operated indoor units to QUIET operation.

3.12 Quick Reference

Quick Reference

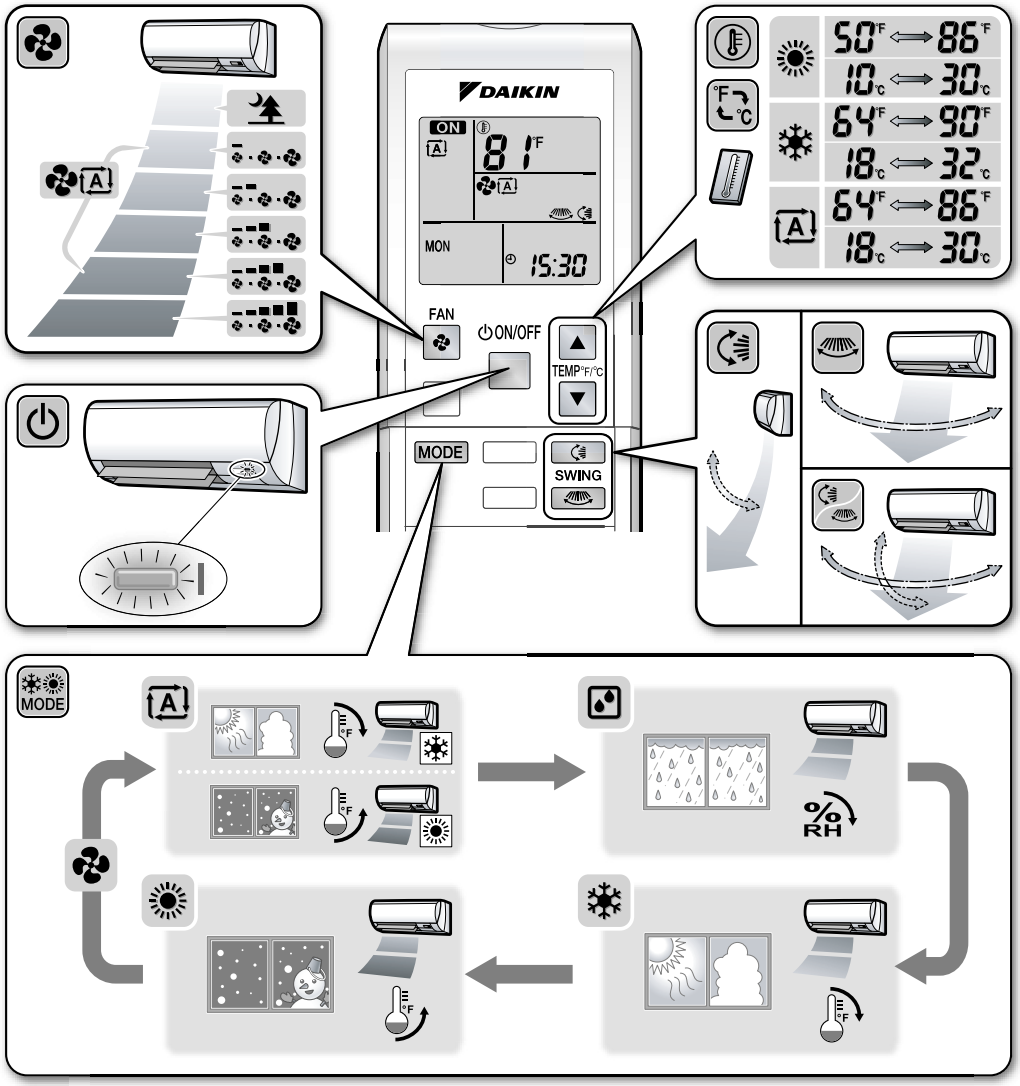

C: 3P297290-1

C: 3P297290-2

4. FDXS-D Series

4.1 Remote Controller

■ Remote Controller

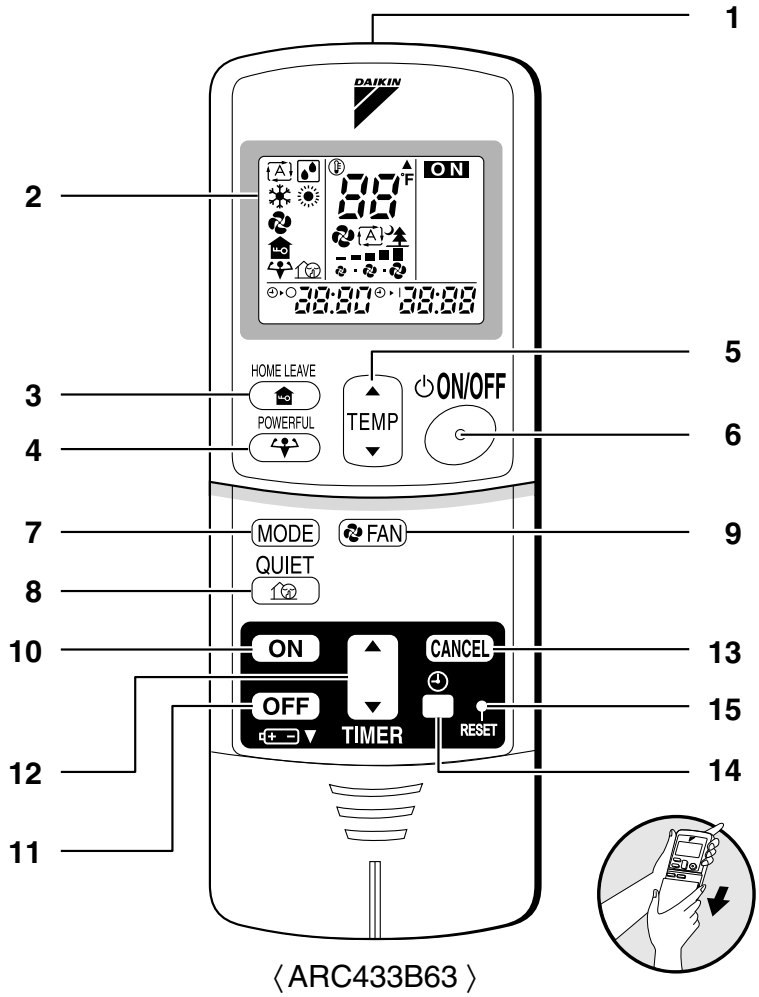

〈ARC433B63〉

1. **Signal transmitter:**
   - It sends signals to the indoor unit.
2. **Display:**
   - It displays the current settings. (In this illustration, each section is shown with all its displays ON for the purpose of explanation.)
3. **HOME LEAVE button:** HOME LEAVE operation (page 14.)
4. **POWERFUL button:** POWERFUL operation (page 12.)
5. **TEMPERATURE adjustment buttons:**
   - It changes the temperature setting.
6. **ON/OFF button:**
   - Press this button once to start operation. Press once again to stop it.
7. **MODE selector button:**
   - It selects the operation mode. (AUTO/DRY/COOL/HEAT/FAN) (page 10.)
8. **QUIET button:** OUTDOOR UNIT QUIET operation (page 13.)
9. **FAN setting button:**
   - It selects the air flow rate setting.
10. **ON TIMER button:** (page 17.)
11. **OFF TIMER button:** (page 16.)
12. **TIMER Setting button:**
    - It changes the time setting.
13. **TIMER CANCEL button:**
    - It cancels the timer setting.
14. **CLOCK button**
15. **RESET button:**
    - Restart the unit if it freezes.
    - Use a thin object to push.

4.2 AUTO · DRY · COOL · HEAT · FAN Operation

AUTO · DRY · COOL · HEAT · FAN Operation

The air conditioner operates with the operation mode of your choice.
From the next time on, the air conditioner will operate with the same operation mode.

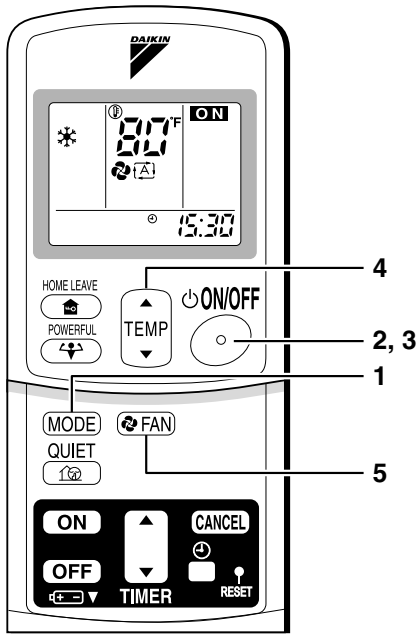

■ To start operation

1. Press "MODE selector button" and select a operation mode.

- Each pressing of the button advances the mode setting in sequence.

  A : AUTO
  : DRY
  : COOL
  : HEAT
  : FAN

2. Press "ON/OFF button".

- The OPERATION lamp lights up.

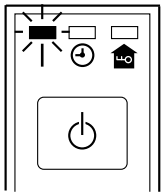

■ To stop operation

3. Press "ON/OFF button" again.

- Then OPERATION lamp goes off.

■ To change the temperature setting

4. Press "TEMPERATURE adjustment button".

DRY or FAN mode	AUTO or COOL or HEAT mode
The temperature setting is not variable.	Press "▲" to raise the temperature and press "▼" to lower the temperature.
	Set to the temperature you like.

10

■ To change the air flow rate setting

5. Press “FAN setting button”.

DRY mode	AUTO or COOL or HEAT or FAN mode
The air flow rate setting is not variable.	Five levels of air flow rate setting from “ ” to “ ” plus “ ” “ ” are available.

- Indoor unit quiet operation

  When the air flow is set to “ ”, the noise from the indoor unit will become quieter.
  Use this when making the indoor unit quieter.
  The unit might lose capacity when the fan strength is set to a weak level.

NOTE

■ Note on HEAT operation

- Since this air conditioner heats the room by taking heat from outdoor air to indoors, the heating capacity becomes smaller in lower outdoor temperatures. If the heating effect is insufficient, it is recommended to use another heating appliance in combination with the air conditioner.
- The heat pump system heats the room by circulating hot air around all parts of the room. After the start of heating operation, it takes some time before the room gets warmer.
- In heating operation, frost may occur on the outdoor unit and lower the heating capacity. In that case, the system switches into defrosting operation to take away the frost.
- During defrosting operation, hot air does not flow out of indoor unit.

■ Note on COOL operation

- This air conditioner cools the room by blowing the hot air in the room outside, so if the outside temperature is high, performance drops.

■ Note on DRY operation

- The computer chip works to rid the room of humidity while maintaining the temperature as much as possible. It automatically controls temperature and fan strength, so manual adjustment of these functions is unavailable.

■ Note on AUTO operation

- In AUTO operation, the system selects a temperature setting and an appropriate operation mode (COOL or HEAT) based on the room temperature at the start of the operation.
- The system automatically reselects setting at a regular interval to bring the room temperature to user-setting level.
- If you do not like AUTO operation, you can manually select the operation mode and setting you like.

■ Note on air flow rate setting

- At smaller air flow rates, the cooling (heating) effect is also smaller.

4.3 POWERFUL Operation

POWERFUL Operation

POWERFUL operation quickly maximizes the cooling (heating) effect in any operation mode. You can get the maximum capacity.

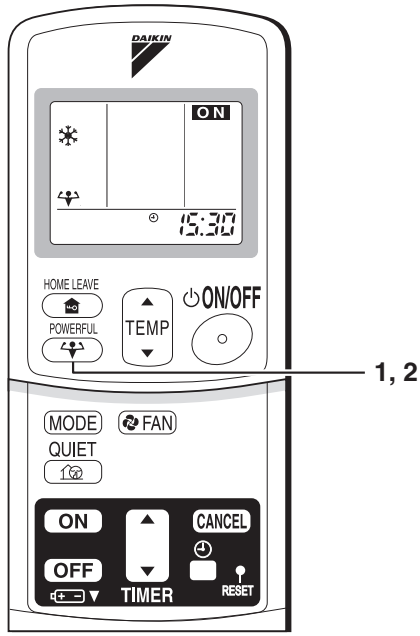

■ To start POWERFUL operation

1. Press "POWERFUL button".

- POWERFUL operation ends in 20 minutes.
  Then the system automatically operates again with the settings which were used before POWERFUL operation.
- When using POWERFUL operation, there are some functions which are not available.
- "" is displayed on the LCD.

■ To cancel POWERFUL operation

2. Press "POWERFUL button" again.

- "" is no longer displayed on the LCD.

NOTE

■ Notes on POWERFUL operation

- POWERFUL Operation cannot be used together with QUIET Operation. Priority is given to the function of whichever button is pressed last.
- POWERFUL Operation can only be set when the unit is running. Pressing the operation stop button causes the settings to be canceled, and the "" is no longer displayed on the LCD.
- **In COOL and HEAT mode**
  To maximize the cooling (heating) effect, the capacity of outdoor unit must be increased and the air flow rate be fixed to the maximum setting.
  The temperature and air flow settings are not variable.
- **In DRY mode**
  The temperature setting is lowered by 4.5°F (-15.3°C)and the air flow rate is slightly increased.
- **In FAN mode**
  The air flow rate is fixed to the maximum setting.

12

4.4 OUTDOOR UNIT QUIET Operation

OUTDOOR UNIT QUIET Operation

OUTDOOR UNIT QUIET operation lowers the sound level of the outdoor unit by changing the frequency and fan speed on the outdoor unit. This function is convenient during night.

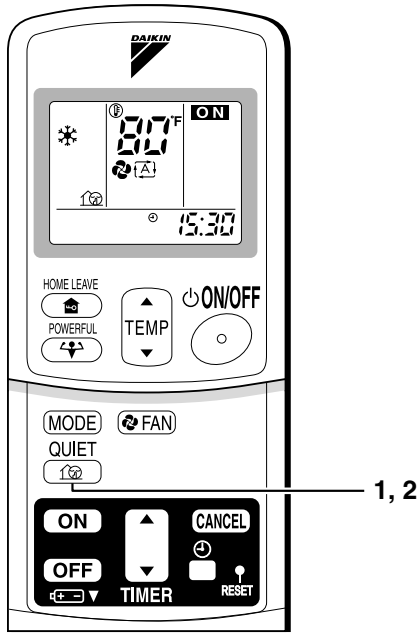

■ To start OUTDOOR UNIT QUIET operation

1. Press “QUIET button”.

- “ ” is displayed on the LCD.

■ To cancel OUTDOOR UNIT QUIET operation

2. Press “QUIET button” again.

- “ ” disappears from the LCD.

NOTE

■ Note on OUTDOOR UNIT QUIET operation

- This function is available in COOL, HEAT, and AUTO modes. (This is not available in FAN and DRY modes.)
- POWERFUL operation and OUTDOOR UNIT QUIET operation cannot be used at the same time. Priority is given to the function of whichever button is pressed last.
- If operation is stopped using the remote controller or the main unit ON/OFF switch when using OUTDOOR UNIT QUIET operation, “ ” will remain on the remote controller display.

4.5 HOME LEAVE Operation

HOME LEAVE Operation

HOME LEAVE operation is a function which allows you to record your preferred temperature and air flow rate settings.

■ To start HOME LEAVE operation

1. Press “HOME LEAVE button”.

- “ ” is displayed on the LCD.
- The HOME LEAVE lamp lights up.

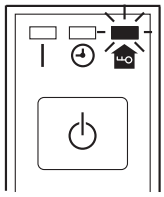

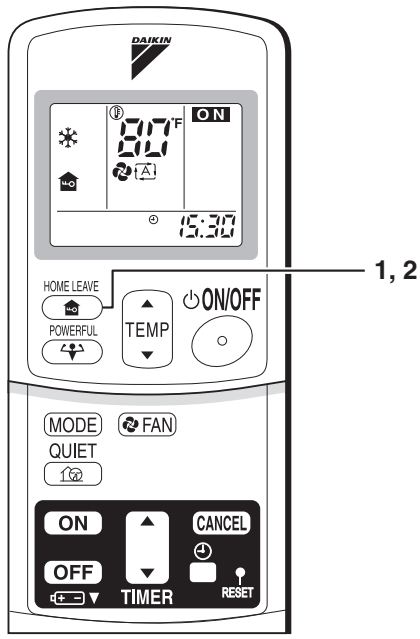

■ To cancel HOME LEAVE operation

2. Press “HOME LEAVE button” again.

- “ ” disappears from the LCD.
- The HOME LEAVE lamp goes off.

Before using HOME LEAVE operation.

■ To set the temperature and air flow rate for HOME LEAVE operation

When using HOME LEAVE operation for the first time, please set the temperature and air flow rate for HOME LEAVE operation. Record your preferred temperature and air flow rate.

	Initial setting		Selectable range	
	Temperature	Air flow rate	Temperature	Air flow rate
Cooling	77°F	“ ”	64-90°F(18-32°C)	5 step, “ ” and “ ”
Heating	77°F	“ ”	50-86°F(10-30°C)	5 step, “ ” and “ ”

1. Press “HOME LEAVE button”. Make sure “ ” is displayed in the remote controller display.
2. Adjust the set temperature with “▲” or “▼” as you like.
3. Adjust the air flow rate with “FAN” setting button as you like.

Home leave operation will run with these settings the next time you use the unit. To change the recorded information, repeat steps 1 – 3.

■ What's the HOME LEAVE operation?

Is there a set temperature and air flow rate which is most comfortable, a set temperature and air flow rate which you use the most? HOME LEAVE operation is a function that allows you to record your favorite set temperature and air flow rate. You can start your favorite operation mode simply by pressing the HOME LEAVE button on the remote controller. This function is convenient in the following situations.

■ Useful in these cases

1. Use as an energy-saving mode.

Set the temperature 4-5˚F higher (cooling) or lower (heating) than normal. Setting the fan strength to the lowest setting allows the unit to be used in energy-saving mode. Also convenient for use while you are out or sleeping.

• Every day before you leave the house...

When you go out, push the "HOME LEAVE Operation" button, and the air conditioner will adjust capacity to reach the preset temperature for HOME LEAVE Operation.

When you return, you will be welcomed by a comfortably air conditioned room.

Push the "HOME LEAVE Operation" button again, and the air conditioner will adjust capacity to the set temperature for normal operation.

• Before bed...

Set the unit to HOME LEAVE Operation before leaving the living room when going to bed.

The unit will maintain the temperature in the room at a comfortable level while you sleep.

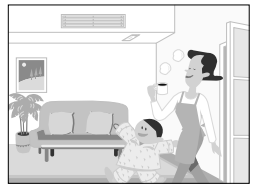

When you enter the living room in the morning, the temperature will be just right. Disengaging HOME LEAVE Operation will return the temperature to that set for normal operation. Even the coldest winters will pose no problem!

2. Use as a favorite mode.

Once you record the temperature and air flow rate settings you most often use, you can retrieve them by pressing HOME LEAVE button. You do not have to go through troublesome remote controller operations.

NOTE

- Once the temperature and air flow rate for HOME LEAVE operation are set, those settings will be used whenever HOME LEAVE operation is used in the future. To change these settings, please refer to the "Before using HOME LEAVE operation" section above.
- HOME LEAVE operation is only available in COOL and HEAT mode. Cannot be used in AUTO, DRY, and FAN mode.
- HOME LEAVE operation runs in accordance with the previous operation mode (COOL or HEAT) before using HOME LEAVE operation.
- HOME LEAVE operation and POWERFUL operation cannot be used at the same time. Last button that was pressed has priority.
- The operation mode cannot be changed while HOME LEAVE operation is being used.
- When operation is shut off during HOME LEAVE operation, using the remote controller or the indoor unit ON/OFF switch, " " will remain on the remote controller display.

4.6 TIMER Operation

TIMER Operation

Timer functions are useful for automatically switching the air conditioner on or off at night or in the morning.
You can also use OFF TIMER and ON TIMER in combination.

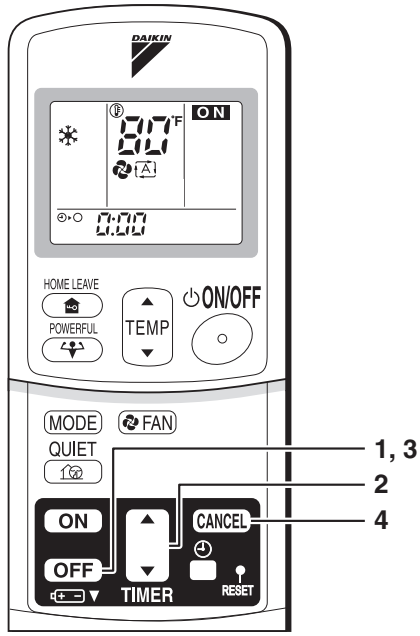

■ To use OFF TIMER operation

- Check that the clock is correct.
  If not, set the clock to the present time.

1. Press “OFF TIMER button”.

0:00 is displayed.
blinks.

2. Press “TIMER Setting button” until the time setting reaches the point you like.

- Every pressing of either button increases or decreases the time setting by 10 minutes. Holding down either button changes the setting rapidly.

3. Press “OFF TIMER button” again.

- The TIMER lamp lights up.

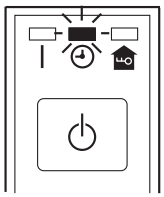

■ To cancel the OFF TIMER operation

4. Press “CANCEL button”.

- The TIMER lamp goes off.

NOTE

- When TIMER is set, the present time is not displayed.
- Once you set ON, OFF TIMER, the time setting is kept in the memory. (The memory is canceled when remote controller batteries are replaced.)
- When operating the unit via the ON/OFF Timer, the actual length of operation may vary from the time entered by the user. (Maximum approx. 10 minutes)

■ NIGHT SET MODE

When the OFF TIMER is set, the air conditioner automatically adjusts the temperature setting (1°F (-17 °C) up in COOL, 4°F (-15.5°C) down in HEAT) to prevent excessive cooling (heating) for your pleasant sleep.

16

■ To use ON TIMER operation

- Check that the clock is correct. If not, set the clock to the present time.

1. Press “ON TIMER button”.

6:00 is displayed.

⊙▸I blinks.

2. Press “TIMER Setting button” until the time setting reaches the point you like.

- Every pressing of either button increases or decreases the time setting by 10 minutes. Holding down either button changes the setting rapidly.

3. Press “ON TIMER button” again.

- The TIMER lamp lights up.

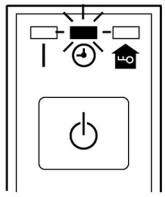

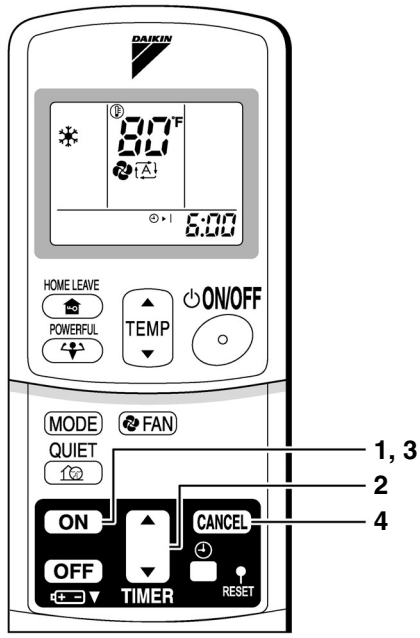

■ To cancel ON TIMER operation

4. Press “CANCEL button”.

- The TIMER lamp goes off.

■ To combine ON TIMER and OFF TIMER

- A sample setting for combining the two timers is shown below.

(Example)
Present time: 11:00 p.m.
(The unit operating)
OFF TIMER at 0:00 a.m.
ON TIMER at 7:00 a.m.
Combined

ATTENTION

■In the following cases, set the timer again.

- After a breaker has turned OFF.
- After a power failure.
- After replacing batteries in the remote controller.

17

C: 3P196326-10

5. CDXS-L, FDXS-L Series

5.1 Remote Controller

Names of Parts

Remote Controller

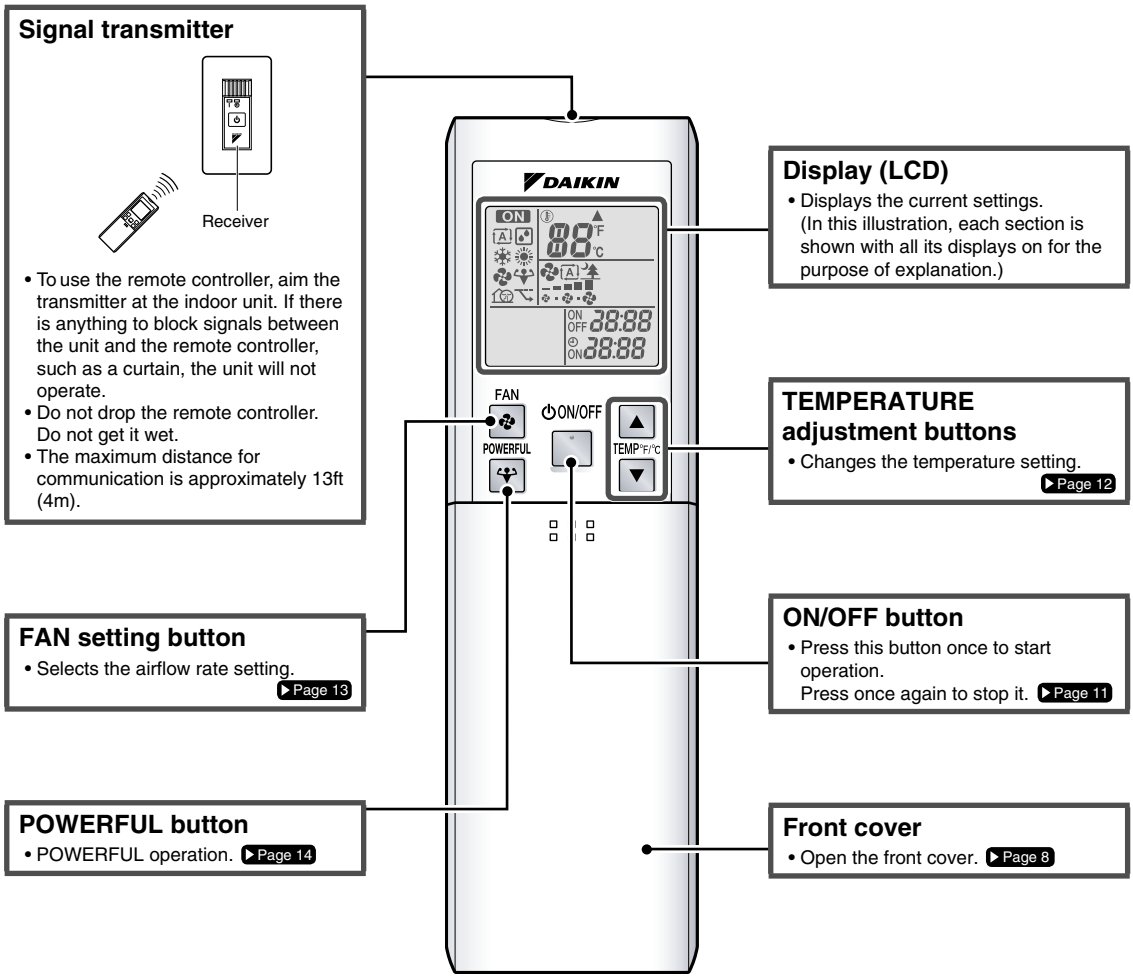

<ARC452A23>

7

■ Open the front cover

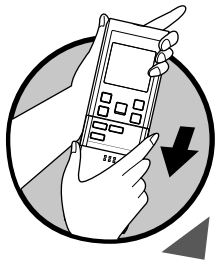

MODE selector button
- Selects the operation mode. (AUTO/DRY/COOL/HEAT/FAN) ▶Page 11

QUIET button
- OUTDOOR UNIT QUIET operation. ▶Page 15

OFF TIMER button ▶Page 17

TIMER CANCEL button
- Cancels the timer setting. ▶Page 17,18

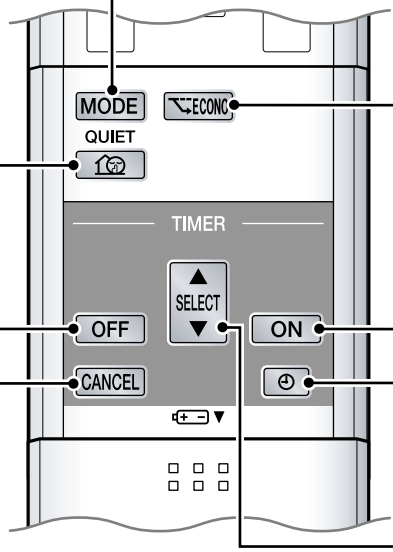

ECONO button
- ECONO operation. ▶Page 16

ON TIMER button ▶Page 18

CLOCK button

SELECT button
- Changes the ON/OFF TIMER settings. ▶Page 17,18

8

5.2 AUTO · DRY · COOL · HEAT · FAN Operation

AUTO · DRY · COOL · HEAT · FAN Operation

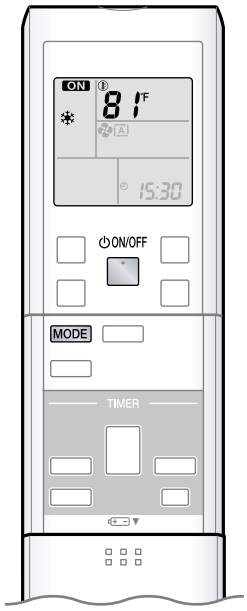

The air conditioner operates with the operation mode of your choice.
From the next time on, the air conditioner will operate with the same operation mode.

■ To start operation

1. Press MODE and select an operation mode.

- Each pressing of the button advances the mode setting in sequence.

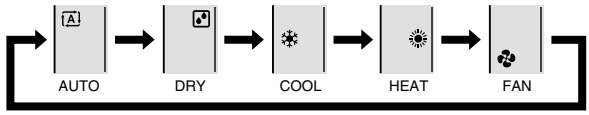

2. Press ON/OFF .

- " ON " is displayed on the LCD.
- The OPERATION lamp lights green.

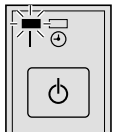

Display

■ To stop operation

Press ON/OFF again.

- " ON " is no longer displayed on the LCD.
- The OPERATION lamp goes off.

NOTE

MODE	Notes on each operation mode
HEAT	• Since this air conditioner heats the room by taking heat from outdoor air to indoors, the heating capacity becomes smaller in lower outdoor temperatures. If the heating effect is insufficient, it is recommended to use another heating appliance in combination with the air conditioner. • The heat pump system heats the room by circulating hot air around all parts of the room. After the start of HEAT operation, it takes some time before the room gets warmer. • In HEAT operation, frost may occur on the outdoor unit and lower the heating capacity. In that case, the system switches into defrosting operation to take away the frost. • During defrosting operation, hot air does not flow out of indoor unit.
COOL	• This air conditioner cools the room by releasing the heat in the room outside. Therefore, the cooling performance of the air conditioner may be degraded if the outdoor temperature is high.
DRY	• The computer chip works to rid the room of humidity while maintaining the temperature as much as possible. It automatically controls temperature and airflow rate, so manual adjustment of these functions is unavailable.
AUTO	• In AUTO operation, the system selects an appropriate operation mode (COOL or HEAT) based on the room and outside temperatures and starts the operation. • The system automatically reselects setting at a regular interval to bring the room temperature to user-setting level.
FAN	• This mode is valid for fan only.

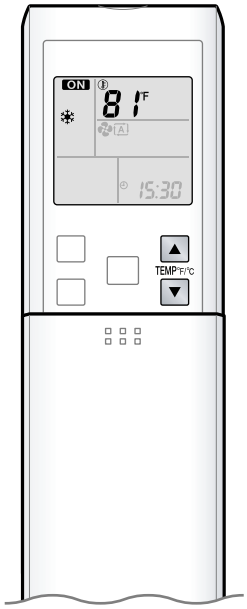

■ To change the temperature setting

Press ▲ (TEMP°F/°C) or ▼ (TEMP°F/°C).

- The displayed items on the LCD will change whenever either one of the buttons is pressed.

COOL operation	HEAT operation	AUTO operation	DRY or FAN operation
64-90˚F (18-32˚C)	50-86˚F (10-30˚C)	64-86˚F (18-30˚C)	The temperature setting is not variable.
Press ▲ to raise the temperature and press ▼ to lower the temperature.			

■ Operating conditions

■ Recommended temperature setting

- For cooling: 78-82˚F (26-28˚C)
- For heating: 68-75˚F (20-24˚C)

■ Tips for saving energy

- Be careful not to cool (heat) the room too much.
  Keeping the temperature setting at a moderate level helps save energy.
- Cover windows with a blind or a curtain.
  Blocking sunlight and air from outdoors increases the cooling (heating) effect.
- Clogged air filters cause inefficient operation and waste energy. Clean them once in about every 2 weeks.

■ Notes on the operating conditions

- The air conditioner always consumes a small amount of electricity even while it is not operating.
- If you are not going to use the air conditioner for a long period, for example in spring or autumn, turn the breaker off.
- Use the air conditioner in the following conditions.

MODE	Operating conditions	If operation is continued out of this range
COOL	Outdoor temperature : 50-115˚F (10-46˚C) Indoor temperature : 64-90˚F (18-32˚C) Indoor humidity : 80% max.	• A safety device may work to stop the operation. (In multi system, it may work to stop the operation of the outdoor unit only.) • Condensation may occur on the indoor unit and drip.
HEAT	Outdoor temperature : 5-75˚F (–15-24˚C) Indoor temperature : 50-86˚F (10-30˚C)	• A safety device may work to stop the operation.
DRY	Outdoor temperature : 50-115˚F (10-46˚C) Indoor temperature : 64-90˚F (18-32˚C) Indoor humidity : 80% max.	• A safety device may work to stop the operation. • Condensation may occur on the indoor unit and drip.

- Operation outside this humidity or temperature range may cause a safety device to disable the system.

5.3 Adjusting the Airflow Rate

Adjusting the Airflow Rate

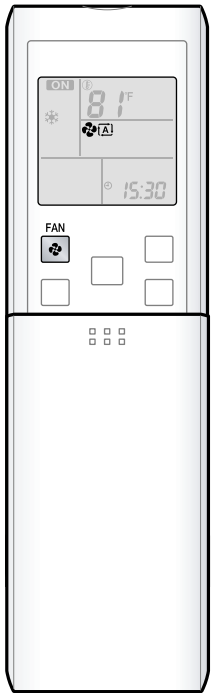

■ To adjust the airflow rate setting

Press .

- Each pressing of advances the airflow rate setting in sequence.

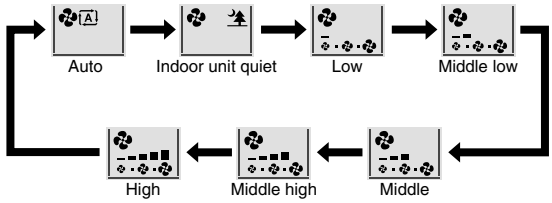

- When the airflow is set to " ", indoor unit quiet operation will start and the noise from the unit will become quieter.
- In indoor unit quiet operation, the airflow rate is set to a weak level.
- In DRY operation, the airflow rate setting is not variable.

NOTE

■ **Note on airflow rate setting**

- At smaller airflow rates, the cooling (heating) effect is also smaller.

13

5.4 POWERFUL Operation

POWERFUL Operation

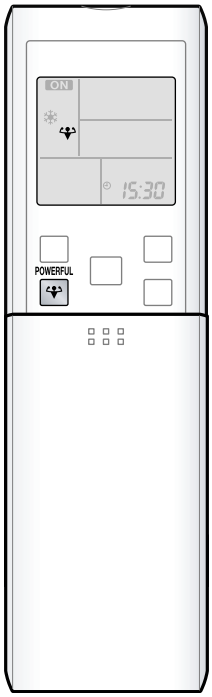

POWERFUL operation quickly maximizes the cooling (heating) effect in any operation mode. You can get the maximum capacity.

■ To start POWERFUL operation

Press [POWERFUL] during operation.

- POWERFUL operation ends in 20 minutes. Then the system automatically operates again with the previous settings which were used before POWERFUL operation.
- "POWERFUL" is displayed on the LCD.

■ To cancel POWERFUL operation

Press [POWERFUL] again.

- "POWERFUL" is no longer displayed on the LCD.

[Example]

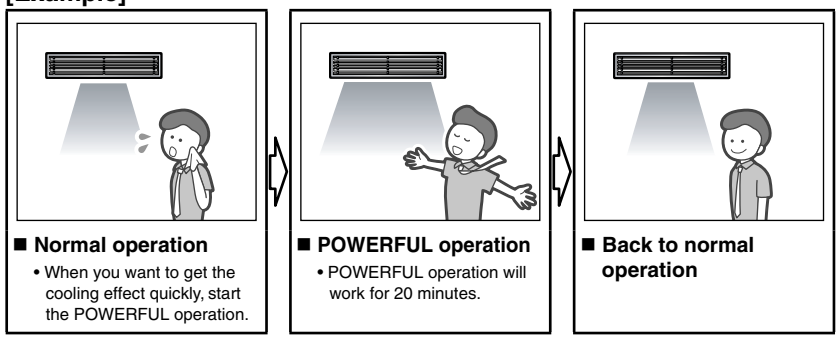

■ **Normal operation**
- When you want to get the cooling effect quickly, start the POWERFUL operation.

■ **POWERFUL operation**
- POWERFUL operation will work for 20 minutes.

■ **Back to normal operation**

NOTE

■ **Notes on POWERFUL operation**

- When using POWERFUL operation, there are some functions which are not available.
- POWERFUL operation cannot be used together with ECONO and OUTDOOR UNIT QUIET operation.
  Priority is given to the function of whichever button is pressed last.
- POWERFUL Operation can only be set when the unit is running. Pressing the operation stop button causes the settings to be canceled, and "POWERFUL" is no longer displayed on the LCD.
- POWERFUL operation will not increase the capacity of the air conditioner if the air conditioner is already in operation with its maximum capacity demonstrated.
- **In COOL, HEAT and AUTO operation**
  To maximize the cooling (heating) effect, the capacity of outdoor unit is increased and the airflow rate is fixed to the maximum setting.
  The temperature and airflow settings are not variable.
- **In DRY operation**
  The temperature setting is lowered by 4.5˚F (2.5˚C) and the airflow rate is slightly increased.
- **In FAN operation**
  The airflow rate is fixed to the maximum setting.
- **When using priority-room setting**
  See "Note for multi system". ▶Page 19

14

5.5 OUTDOOR UNIT QUIET Operation

OUTDOOR UNIT QUIET Operation

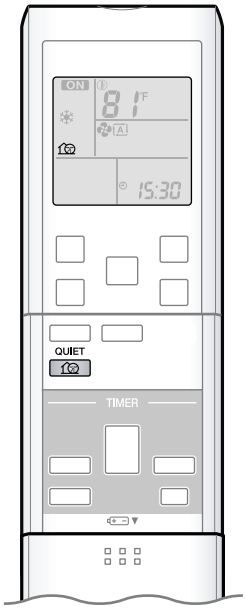

OUTDOOR UNIT QUIET operation lowers the noise level of the outdoor unit by changing the frequency and fan speed on the outdoor unit. This function is convenient during night.

■ To start OUTDOOR UNIT QUIET operation

Press .

- "" is displayed on the LCD.

■ To cancel OUTDOOR UNIT QUIET operation

Press again.

- "" is no longer displayed on the LCD.

[Example] **Using the OUTDOOR UNIT QUIET operation during the night.**

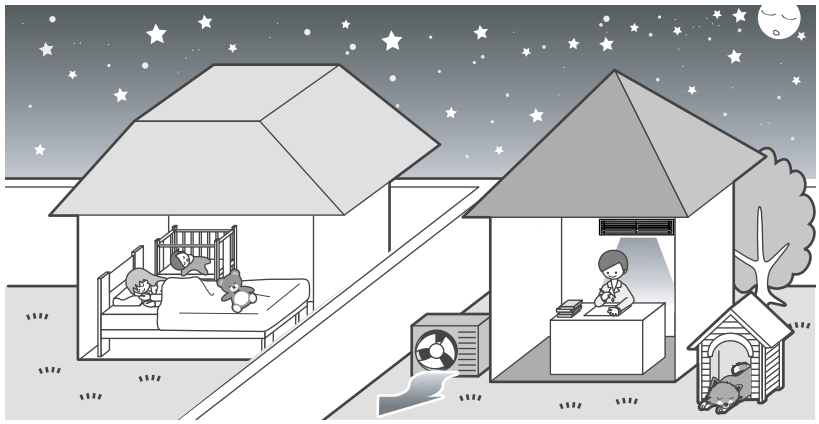

- The sound level of the outdoor unit will be lower.
  This is convenient in consideration of your neighbors.

NOTE

■ **Notes on OUTDOOR UNIT QUIET operation**

- If using a multi system, the OUTDOOR UNIT QUIET operation will work only when this function is set on all operated indoor units. However, if using priority room setting, refer to note for multi system. ▶Page 19
- This function is available in COOL, HEAT, and AUTO operation.
  (This is not available in FAN and DRY operation.)
- POWERFUL operation and OUTDOOR UNIT QUIET operation cannot be used at the same time.
  Priority is given to the function of whichever button is pressed last.
- If operation is stopped using the remote controller or the indoor unit ON/OFF switch when using OUTDOOR UNIT QUIET operation, "" will remain on the remote controller display.
- OUTDOOR UNIT QUIET operation will drop neither the frequency nor fan speed if the frequency and fan speed have been already dropped low enough.

15

5.6 ECONO Operation

ECONO Operation

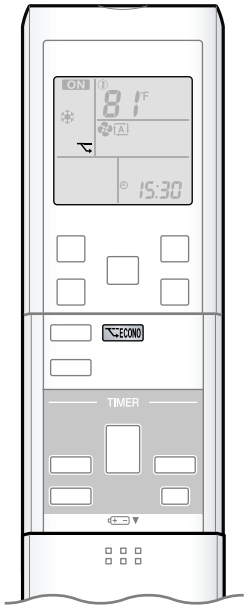

ECONO operation is a function which enables efficient operation by limiting the maximum power consumption value.
This function is useful for cases in which attention should be paid to ensure a circuit breaker will not trip when the product runs alongside other appliances.

■ To start ECONO operation

Press ECONO during operation.

- "" is displayed on the LCD.

■ To cancel ECONO operation

Press ECONO again.

- "" is no longer displayed on the LCD.

[Example]

Normal operation

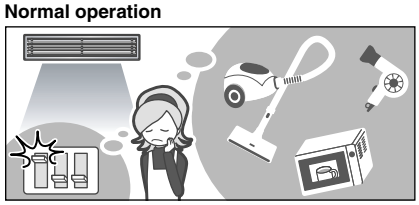

- In case the air conditioner and other appliances which require high power consumption are used at same time, a circuit breaker may trip if the air conditioner operate with its maximum capacity.

ECONO operation

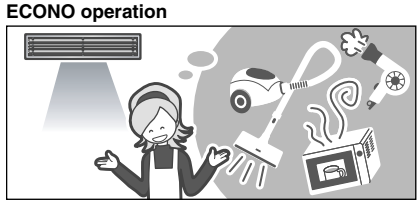

- The maximum power consumption of the air conditioner is limited by using ECONO operation. The circuit breaker is unlikely to trip even if the air conditioner and other appliances are used at same time.

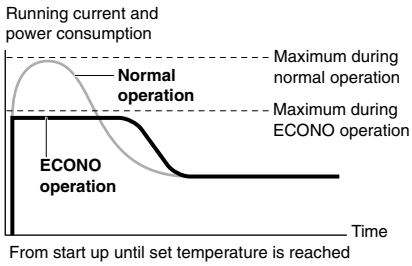

- This diagram is a representation for illustrative purposes only.
  The maximum running current and power consumption of the air conditioner in ECONO operation vary with the connecting outdoor unit.

NOTE

■ Notes on ECONO operation

- ECONO operation can only be set when the unit is running. Pressing the operation stop button causes the settings to be canceled, and the "" is no longer displayed on the LCD.
- ECONO operation is a function which enables efficient operation by limiting the power consumption of the outdoor unit (operating frequency).
- ECONO operation functions in AUTO, COOL, DRY, and HEAT operation.
- POWERFUL and ECONO operation cannot be used at the same time.
  Priority is given to the function of whichever button is pressed last.
- If the level of power consumption is already low, ECONO operation will not drop the power consumption.

16

5.7 OFF TIMER Operation

OFF TIMER Operation

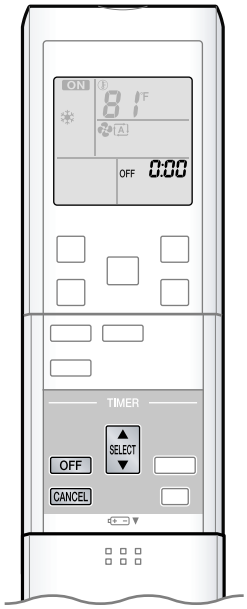

Timer functions are useful for automatically switching the air conditioner on or off at night or in the morning. You can also use OFF TIMER and ON TIMER in combination.

■ To use OFF TIMER operation

- Check that the clock is correct.
  If not, set the clock to the present time.

1. Press OFF .

" 0:00 " is displayed on the LCD.
" OFF " blinks.

- " ⏲ " is no longer displayed on the LCD.

2. Press SELECT until the time setting reaches the point you like.

- Each pressing of either button increases or decreases the time setting by 10 minutes. Holding down either button changes the time setting rapidly.

3. Press OFF again.

- " OFF " and setting time are displayed on the LCD.
- The TIMER lamp lights yellow.

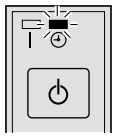

Display

■ To cancel OFF TIMER operation

Press CANCEL .

- " OFF " and setting time are no longer displayed on the LCD.
- " ⏲ " and day of the week are displayed on the LCD.
- The TIMER lamp goes off.

NOTE

■ **Notes on TIMER operation**
- When TIMER is set, the present time is not displayed.
- Once you set ON/OFF TIMER, the time setting is kept in the memory. The memory is canceled when remote controller batteries are replaced.
- When operating the unit via the ON/OFF TIMER, the actual length of operation may vary from the time entered by the user. (Maximum approximately 10 minutes)

■ **NIGHT SET mode**
- When the OFF TIMER is set, the air conditioner automatically adjusts the temperature setting (0.9˚F (0.5˚C) up in COOL, 3.6˚F (2.0˚C) down in HEAT) to prevent excessive cooling (heating) for your pleasant sleep.

17

5.8 ON TIMER Operation

ON TIMER Operation

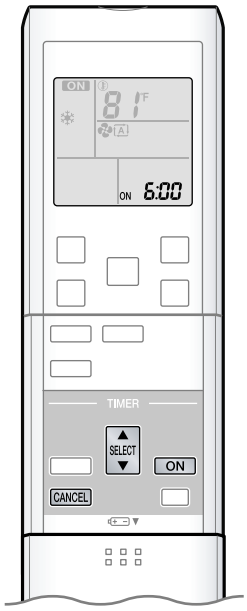

■ To use ON TIMER operation

• Check that the clock is correct.
If not, set the clock to the present time.

1. Press ON .

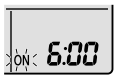

" 6:00 " is displayed on the LCD.
" ON " blinks.

• "◷" is no longer displayed on the LCD.

2. Press SELECT until the time setting reaches the point you like.

• Each pressing of either button increases or decreases the time setting by 10 minutes. Holding down either button changes the setting rapidly.

3. Press ON again.

• " ON " and setting time are displayed on the LCD.
• The TIMER lamp lights yellow.

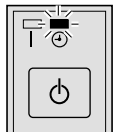

Display

■ To cancel ON TIMER operation

Press CANCEL .

• " ON " and setting time are no longer displayed on the LCD.
• " ◷ " and day of the week are displayed on the LCD.
• The TIMER lamp goes off.

■ To combine ON TIMER and OFF TIMER

• A sample setting for combining the 2 timers is shown below.

(Example)
Present time: 23:00 (The unit operating)
OFF TIMER at 0:00 } Combined
ON TIMER at 14:00

NOTE

■ **In the following cases, set the timer again.**
• After a breaker has turned off.
• After a power failure.
• After replacing batteries in the remote controller.

18

5.9 Note for Multi System

Note for Multi System

Multi system has one outdoor unit connected to multiple indoor units.

■ Selecting the operation mode

With the priority room setting present but inactive or not present.

When more than one indoor unit is operating, priority is given to the first unit that was turned on.
In this case, set the units that are turned on later to the same operation mode as the first unit.
Otherwise, they will enter the standby state, and the OPERATION lamp will flash: this does not indicate malfunction.

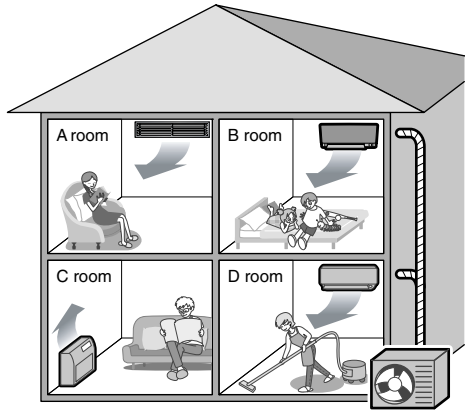

NOTE

■ **Notes on operation mode for multi system**
- COOL, DRY and FAN operation may be used at the same time.
- AUTO operation automatically selects COOL operation or HEAT operation based on the room temperature.
  Therefore, AUTO operation is available when selecting the same operation mode as that of the room with the first unit to be turned on.

⚠ CAUTION

- Normally, the operation mode in the room where the unit is first run is given priority, but the following situations are exceptions, so please keep this in mind.
  If the operation mode of the first room is FAN operation, then using HEAT operation in any room after this will give priority to HEAT operation. In this situation, the air conditioner running in FAN operation will go on standby, and the OPERATION lamp will flash.

With the priority room setting active.

Refer to priority room setting on the next page.

■ NIGHT QUIET mode (Available only for COOL operation)

NIGHT QUIET mode requires initial programming during installation. Please consult your retailer or dealer for assistance.
NIGHT QUIET mode reduces the operation noise of the outdoor unit during the nighttime hours to prevent annoyance to neighbors.
- The NIGHT QUIET mode is activated when the temperature drops 10.8˚F (6˚C) or more below the highest temperature recorded that day.
  Therefore, when the temperature difference is less than 7.2˚F (4˚C), this function will not be activated.
- NIGHT QUIET mode reduces slightly the cooling efficiency of the unit.

■ OUTDOOR UNIT QUIET operation

Refer to OUTDOOR UNIT QUIET operation. ▶Page 15

With the priority room setting present but inactive or not present.

When using the OUTDOOR UNIT QUIET operation feature with the multi system, set all indoor units to OUTDOOR UNIT QUIET operation using their remote controllers.
When clearing OUTDOOR UNIT QUIET operation, clear one of the operating indoor units using their remote controller.
However OUTDOOR UNIT QUIET operation display remains on the remote controller for other rooms.
We recommend you release all rooms using their remote controllers.

With the priority room setting active.

Refer to priority room setting on the next page.

■ COOL/HEAT mode lock

The COOL/HEAT mode lock requires initial programming during installation. Please consult your authorized dealer for assistance. The COOL/HEAT mode lock sets the unit forcibly to either COOL or HEAT operation. This function is convenient when you wish to set all indoor units connected to the multi system to the same operation mode.

NOTE

- The COOL/HEAT mode lock cannot be activated together with the priority room setting.

■ Priority room setting

The priority room setting requires initial programming during installation. Please consult your authorized dealer for assistance. The room designated as the priority room takes priority in the following situations.

Operation mode priority

- As the operation mode of the priority room takes precedence, the user can select a different operation mode from other rooms.

[Example]

- Room A is the priority room in the examples.
  When COOL operation is selected in room A while operating the following modes in room B, C and D :

Operation mode in room B, C and D	Status of room B, C and D when the unit in room A is in COOL operation
COOL or DRY or FAN	Current operation mode maintained
HEAT	The unit enters standby mode. Operation resumes when the room A unit stops operating.
AUTO	If the unit is set to COOL operation, it continues. If the unit is set to HEAT operation, it enters standby mode. Operation resumes when the room A unit stops operating.

Priority when POWERFUL operation is used

[Example]

- Room A is the priority room in the examples.
  The indoor units in rooms A, B, C and D are all operating. If the unit in room A enters POWERFUL operation, operation capacity will be concentrated in room A. In such a case, the cooling (heating) efficiency of the units in room B, C and D may be slightly reduced.

Priority when using OUTDOOR UNIT QUIET operation

[Example]

- Room A is the priority room in the examples.
  Just by setting the unit in room A to QUIET operation, the air conditioner starts OUTDOOR UNIT QUIET operation.
  You don't have to set all the operated indoor units to QUIET operation.

5.10 Quick Reference

Quick Reference

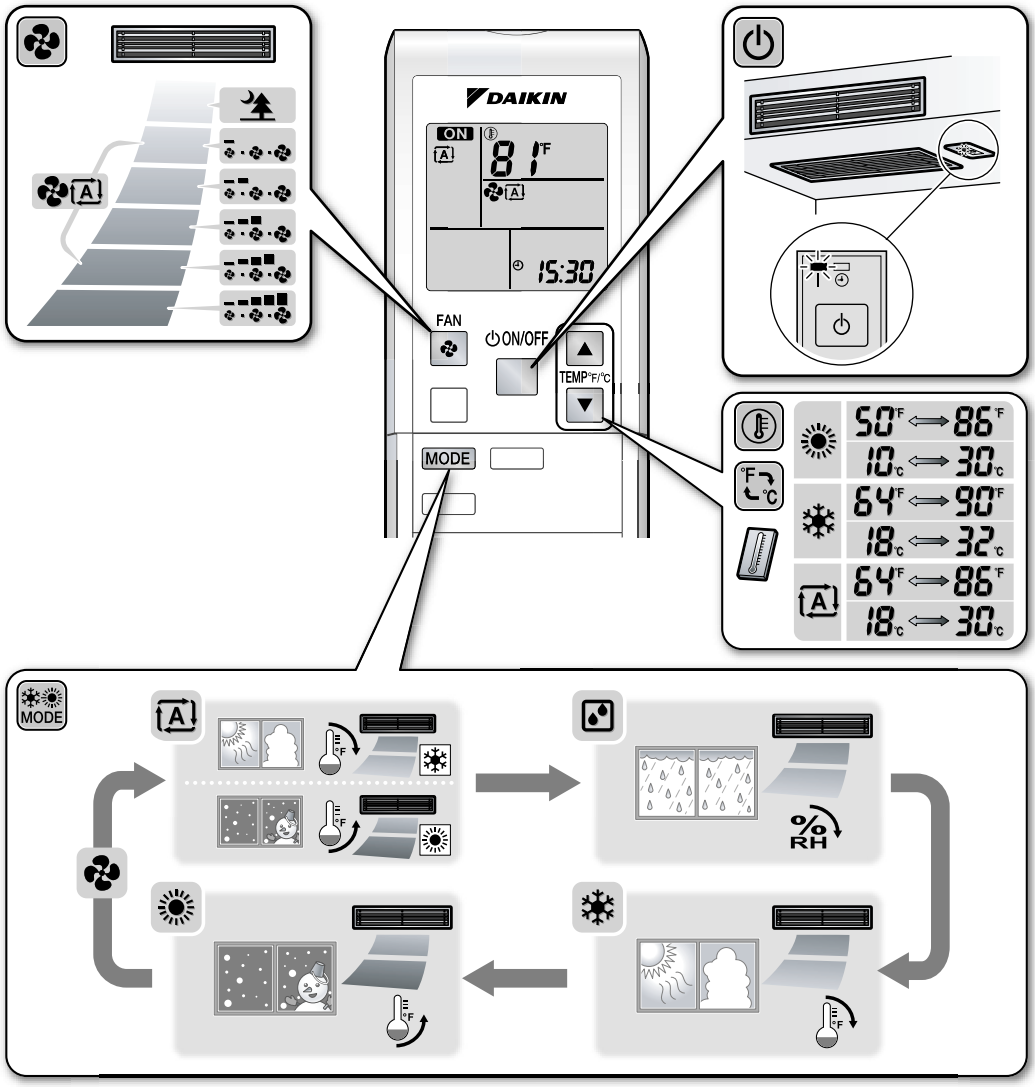

C: 3P297290-3

Part 6
Service Diagnosis

1. Troubleshooting with LED 135
   1.1 Indoor Unit 135
   1.2 Outdoor Unit 136
2. Problem Symptoms and Measures 137
3. Service Check Function 138
   3.1 ARC452 Series Remote Controller 138
   3.2 ARC433 Series Remote Controller 141
4. Code Indication on Remote Controller 144
   4.1 Indoor Unit 144
   4.2 Outdoor Unit 145
5. Troubleshooting for Indoor Unit 146
   5.1 Indoor Unit PCB Abnormality 146
   5.2 Freeze-up Protection Control or Heating Peak-cut Control 148
   5.3 Fan Motor or Related Abnormality 150
   5.4 Thermistor or Related Abnormality (Indoor Unit) 153
   5.5 Signal Transmission Error (between Indoor Unit and Outdoor Unit) 154
   5.6 Unspecified Voltage (between Indoor Unit and Outdoor Unit) 155
6. Troubleshooting for Outdoor Unit 156
   6.1 Refrigerant Shortage 156
   6.2 Low-voltage Detection or Over-voltage Detection 159
   6.3 Signal Transmission Error (on Outdoor Unit PCB) (24/32 Class Only) 161
   6.4 Unspecified Voltage (between Indoor Unit and Outdoor Unit) / Anti-icing Function in Other Rooms 162
   6.5 Anti-icing Function 163
   6.6 Outdoor Unit PCB Abnormality (24/32 Class Only) 165
   6.7 OL Activation (Compressor Overload) 166
   6.8 Compressor Lock 167
   6.9 DC Fan Lock 168
   6.10 Input Overcurrent Detection 169
   6.11 Four Way Valve Abnormality (18 Class Only) 170
   6.12 Discharge Pipe Temperature Control 172
   6.13 High Pressure Control in Cooling 173
   6.14 Compressor Sensor System Abnormality (24/32 Class Only) 174
   6.15 Position Sensor Abnormality 176
   6.16 CT or Related Abnormality 179
   6.17 Thermistor or Related Abnormality (Outdoor Unit) 181
   6.18 Electrical Box Temperature Rise 183
   6.19 Radiation Fin Temperature Rise 186
   6.20 Output Overcurrent Detection 189
7. Check 191
   7.1 Thermistor Resistance Check 191

7.2 Fan Motor Connector Check 192
7.3 Hall IC Check 192
7.4 Power Supply Waveform Check 193
7.5 Outdoor Electronic Expansion Valve Check 194
7.6 Four Way Valve Performance Check 195
7.7 Inverter Unit Refrigerant System Check 195
7.8 “Inverter Checker” Check 196
7.9 Rotation Pulse Check on the Outdoor Unit PCB 197
7.10 Installation Condition Check 198
7.11 Discharge Pressure Check 198
7.12 Outdoor Fan System Check 199
7.13 Main Circuit Short Check 199
7.14 Capacitor Voltage Check 200
7.15 Power Module Check 201

1. Troubleshooting with LED

1.1 Indoor Unit

Operation Lamp

The operation lamp blinks when any of the following errors is detected.

1. When a protection device of the indoor or outdoor unit is activated, or when the thermistor malfunctions.
2. When a signal transmission error occurs between the indoor and outdoor units.

In either case, conduct the diagnostic procedure described in the following pages.

CTXS/FTXS series
(Ex: CTXS07LVJU, FTXS09/12LVJU)

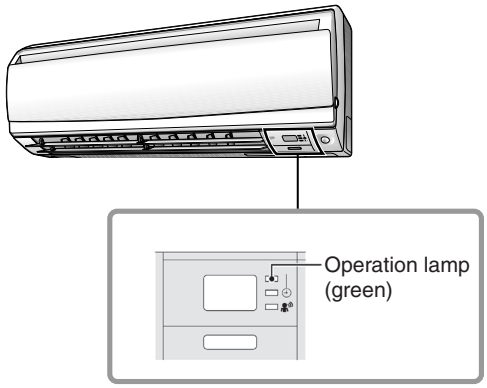

(R13534)

CDXS/FDXS series
(Ex: FDXS09/12LVJU, CDXS15/18LVJU)

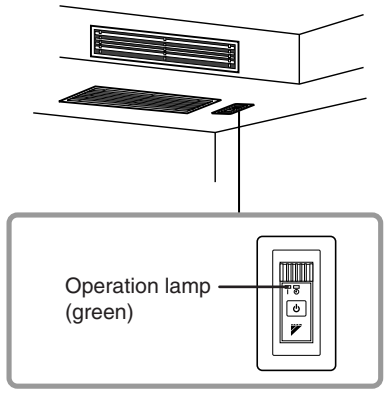

(R16589)

Caution: When operation stops suddenly and the operation lamp blinks, it could be "operation mode conflict".
Check followings;
Are the operation modes all the same for the indoor units connected to multi system outdoor unit?
If not, set all the indoor units to the same operation mode and confirm that the operation lamp is not blinking.
Moreover, when the operation mode is automatic, set all the indoor unit operation mode as "cooling" or "heating" and check again if the operation lamp is normal.
If the lamp stops blinking after the above steps, there is no malfunction.

∗ Operation stops and operation lamp blinks only for indoor unit which different operation mode is set later. (The first set operation mode has priority.)

Service Monitor

The indoor unit has one green LED (LED A) on the control PCB. When the microcomputer works in order, the LED A blinks.

1.2 Outdoor Unit

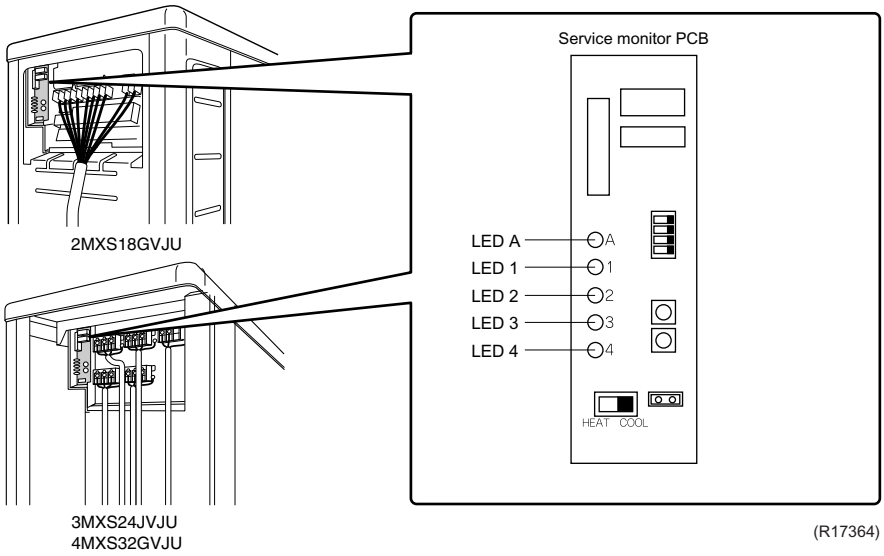

The outdoor unit has a green LED (LED A) and red LEDs (LED 1 ~ LED 4) on the PCB.
When the microcomputer works in order, the LED A blinks, and when the system is in normal condition, the red LEDs are OFF.
Even after the error is canceled and the unit operates in normal condition, the LED indication remains.

2. Problem Symptoms and Measures

Problem Symptom	Check Item	Details of Measure	Reference Page
None of the units operates.	Check the power supply.	Check if the rated voltage is supplied.	—
	Check the types of the indoor units.	Check if the indoor unit type is compatible with the outdoor unit.	—
	Check the outdoor temperature.	Heating operation cannot be used when the outdoor temperature is 59.9°F (15.5°C) or higher, and cooling operation cannot be used when the outdoor temperature is below 14°F (–10°C).	—
	Diagnose with remote controller indication	—	144, 145
	Check the remote controller addresses.	Check if address settings for the remote controller and indoor unit are correct.	265
Operation sometimes stops.	Check the power supply.	A power failure of 2 to 10 cycles can stop air conditioner operation. (Operation lamp OFF)	—
	Check the outdoor temperature.	Heating operation cannot be used when the outdoor temperature is 59.9°F (15.5°C) or higher, and cooling operation cannot be used when the outdoor temperature is below 14°F (–10°C).	—
	Diagnose with remote controller indication.	—	144, 145
Some indoor units do not operate.	Check the type of the indoor units.	Check if the indoor unit type is compatible with the outdoor unit.	—
	Diagnose with remote controller indication	—	144, 145
Units operate but do not cool, or do not heat.	Check for wiring and piping errors in the connection between the indoor and outdoor units.	Check the wiring and piping. Conduct the wiring error check.	—
	Check for thermistor detection errors.	Check if the thermistor is mounted securely.	—
	Check for faulty operation of the outdoor electronic expansion valve.	Set all the units to cooling operation, and compare the temperatures of the liquid pipes to see if the each outdoor electronic expansion valve works.	—
	Diagnose with remote controller indication.	—	144, 145
	Diagnose by service port pressure and operating current.	Check for refrigerant shortage.	156
Large operating noise and vibrations	Check the output voltage of the power module.	—	201
	Check the power module.	—	—
	Check the installation condition.	Check if the required spaces for installation (specified in the installation manual) are provided.	—

3. Service Check Function

3.1 ARC452 Series Remote Controller

Check Method 1

1. When the timer cancel button is held down for 5 seconds, 00 is displayed on the temperature display screen.

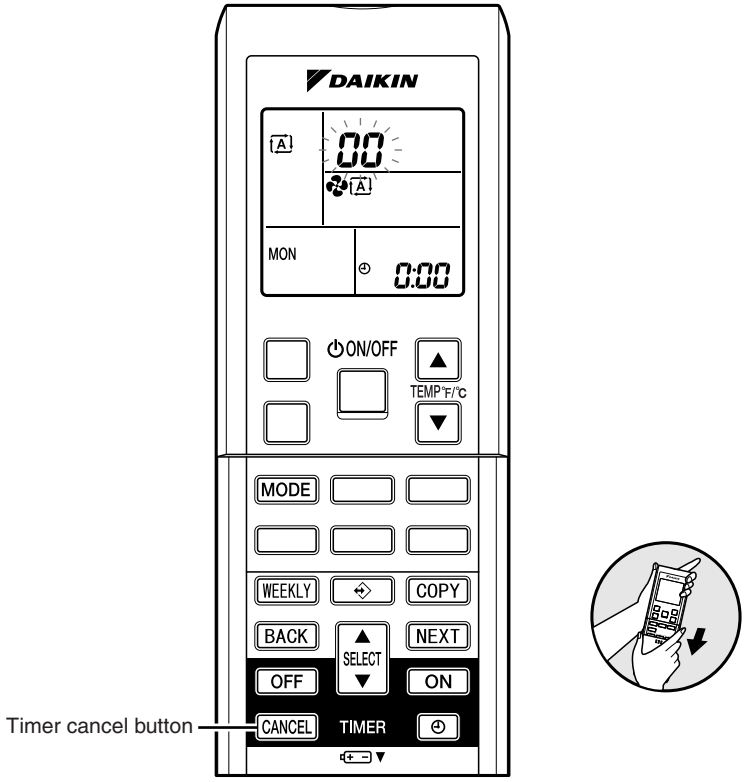

< ARC452 Series >

(R14460)

2. Press the timer cancel button repeatedly until a long beep sounds.

■ The code indication changes in the sequence shown below.

No.	Code	No.	Code	No.	Code
1	00	13	C7	25	U8
2	U4	14	A3	26	UH
3	L5	15	H8	27	P4
4	E6	16	H9	28	L3
5	H6	17	C9	29	L4
6	H0	18	C4	30	H7
7	A6	19	C5	31	U2
8	E7	20	J3	32	E8
9	U0	21	J6	33	AH
10	F3	22	E5	34	F8
11	A5	23	A1	35	H1
12	F6	24	E1	36	P9

Note:

1. A short beep or two consecutive beeps indicate non-corresponding codes.
2. To return to the normal mode, hold the timer cancel button down for 5 seconds. When the remote controller is left untouched for 60 seconds, it also returns to the normal mode.
3. Not all the error codes are displayed. When you cannot find the error code, try the check method 2. (→ Refer to page 139.)

Check Method 2

1. Press the 3 buttons (TEMP▲, TEMP▼, MODE) at the same time to enter the diagnosis mode.

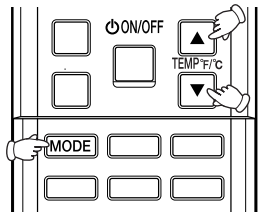

(R14550)

The left-side number blinks.

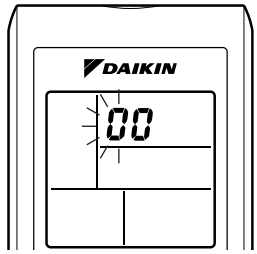

(R9430)

2. Press the [TEMP] ▲ or ▼ button and change the number until you hear the two consecutive beeps or the long beep.

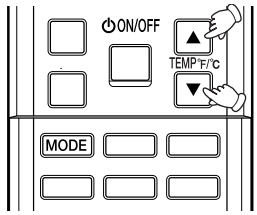

(R14551)

3. Diagnose by the sound.
   ★beep : The left-side number does not correspond with the error code.
   ★two consecutive beeps : The left-side number corresponds with the error code but the right-side number does not.
   ★long beep : Both the left-side and right-side number correspond with the error code. The numbers indicated when you hear the long beep are the error code.
   Error codes and description → Refer to page 144, 145.

4. Press the [MODE] button.

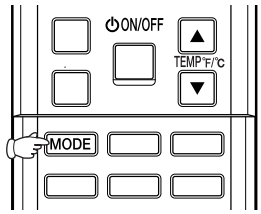

(R14552)

The right-side number blinks.

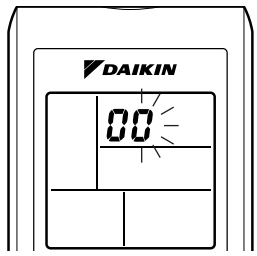

(R9429)

5. Press the [TEMP] ▲ or ▼ button and change the number until you hear the long beep.

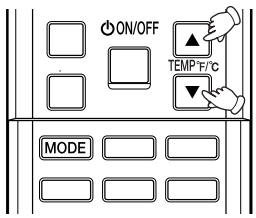

(R14547)

6. Diagnose by the sound.
   ★beep : The left-side number does not correspond with the error code.
   ★two consecutive beeps : The left-side number corresponds with the error code but the right-side number does not.
   ★long beep : Both the left-side and right-side number corresponds with the error code.

7. Determine the error code.
   The numbers indicated when you hear the long beep are the error code.
   Error codes and description → Refer to page 144, 145.

8. Press the [MODE] button to exit from the diagnosis mode.

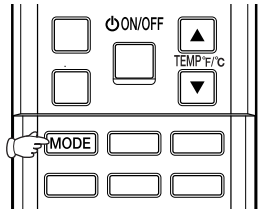

(R14548)

The display 7 means the trial operation mode.
Refer to page 259 for trial operation.

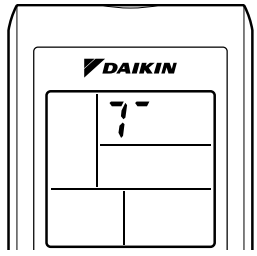

(R9879)

9. Press the [ON/OFF] button twice to return to the normal mode.

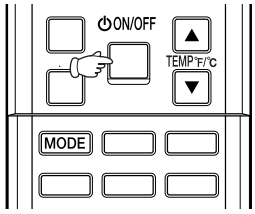

(R14549)

Note: When the remote controller is left untouched for 60 seconds, it returns to the normal mode.

3.2 ARC433 Series Remote Controller

Check Method 1

1. When the timer cancel button is held down for 5 seconds, 00 is displayed on the temperature display screen.

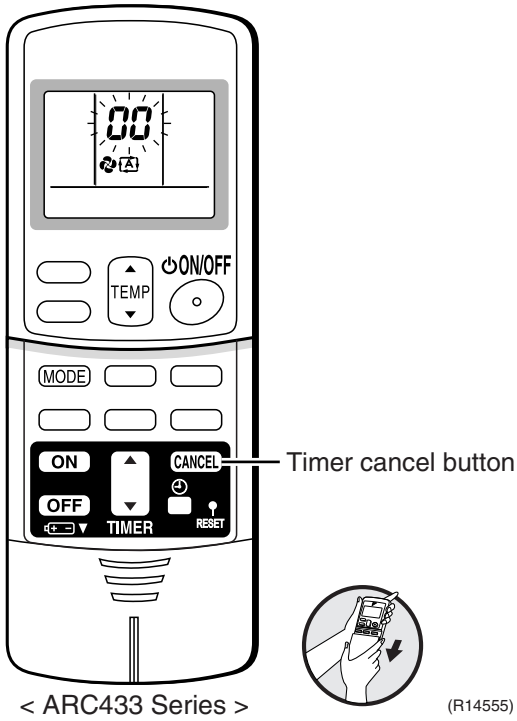

2. Press the timer cancel button repeatedly until a long beep sounds.

■ The code indication changes in the sequence shown below.

No.	Code	No.	Code	No.	Code
1	00	12	C7	23	H0
2	U4	13	H8	24	E1
3	F3	14	J3	25	P4
4	E6	15	A3	26	L3
5	L5	16	A1	27	L4
6	A6	17	C4	28	H6
7	E5	18	C5	29	H7
8	F6	19	H9	30	U2
9	C9	20	J6	31	UH
10	U0	21	UA	32	EA
11	E7	22	A5	33	AH

Note:

1. A short beep or two consecutive beeps indicate non-corresponding codes.
2. To return to the normal mode, hold the timer cancel button down for 5 seconds. When the remote controller is left untouched for 60 seconds, it also returns to the normal mode.
3. Not all the error codes are displayed. When you cannot find the error code, try the check method 2. (→ Refer to page 142.)

Check Method 2

1. Press the center of the [TEMP] button and the [MODE] button at the same time to enter the diagnosis mode.

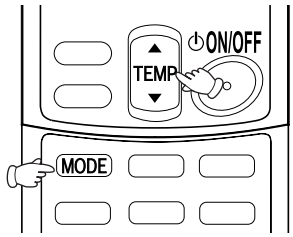

(R4272)

The left-side number blinks.

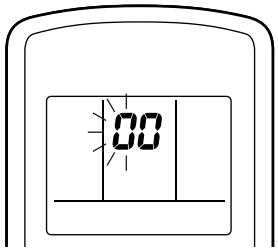

(R14967)

2. Press the [TEMP] ▲ or ▼ button and change the number until you hear the two consecutive beeps or the long beep.

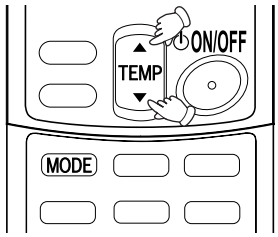

(R4274)

3. Diagnose by the sound.
   ★ beep : The left-side number does not correspond with the error code.
   ★ two consecutive beeps : The left-side number corresponds with the error code but the right-side number does not.
   ★ long beep : Both the left-side and right-side numbers correspond with the error code.
   The numbers indicated when you hear the long beep are the error code.
   Error codes and description → Refer to page 144, 145.

4. Press the [MODE] button.

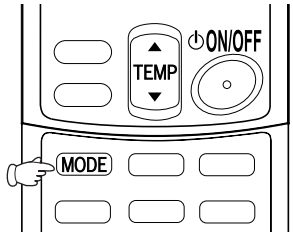

(R4275)

The right-side number blinks.

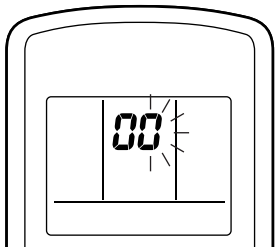

(R14968)

5. Press the [TEMP] ▲ or ▼ button and change the number until you hear the long beep.

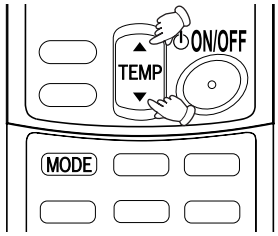

(R4277)

6. Diagnose by the sound.
   ★ beep : The left-side number does not correspond with the error code.
   ★ two consecutive beeps : The left-side number corresponds with the error code but the right-side number does not.
   ★ long beep : Both the left-side and right-side numbers correspond with the error code.

7. Determine the error code.
   The numbers indicated when you hear the long beep are the error code.
   Error codes and description → Refer to page 144, 145.

8. Press the [MODE] button to exit from the diagnosis mode.

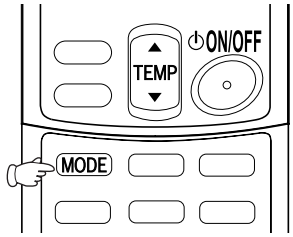

(R4278)

The display 7 means the trial operation mode.
Refer to page 259 for trial operation.

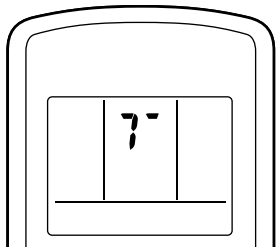

(R14969)

9. Press the [ON/OFF] button twice to return to the normal mode.

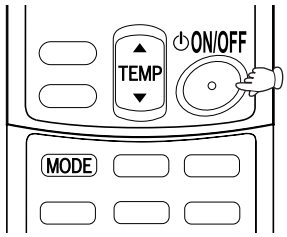

(R9670)

Note: When the remote controller is left untouched for 60 seconds, it returns to the normal mode.

4. Code Indication on Remote Controller

4.1 Indoor Unit

Error Codes	Description		Reference Page
00	Normal condition		—
A1	Indoor unit PCB abnormality		146
A5	Freeze-up protection control or heating peak-cut control		148
A6	Fan motor or related abnormality	DC motor (CTXS/FTXS series)	150
		AC motor (CDXS/FDXS series)	152
C4	Indoor heat exchanger thermistor or related abnormality		153
C9	Room temperature thermistor or related abnormality		153
U4	Signal transmission error (between indoor unit and outdoor unit)		154
U8	Unspecified voltage (between indoor unit and outdoor unit)		155

4.2 Outdoor Unit

☼: ON, ●: OFF, ◑: Blinks

Green : Blinks in normal condition
Red : OFF in normal condition

Outdoor Unit LED Indication					Error Codes	Description	Reference Page
Green	Red						
A	1	2	3	4			
◑	●	●	●	●	00	Normal condition	—
					UA	Unspecified voltage (between indoor unit and outdoor unit)	162
					UH	Anti-icing function in other rooms	162
◑	●	●	☼	☼	(U0)	Refrigerant shortage	156
◑	☼	●	●	☼	U2	Low-voltage detection or over-voltage detection	159
◑	●	☼	☼	☼	U7	Signal transmission error (on outdoor unit PCB) (24/32 class only)	161
◑	☼	●	☼	☼	A5	Anti-icing function	163
◑	☼	☼	☼	●	E1	Outdoor unit PCB abnormality (24/32 class only)	165
◑	☼	●	☼	●	(E5)	OL activation (compressor overload)	166
◑	●	☼	☼	●	(E6)	Compressor lock	167
◑	☼	☼	☼	☼	E7	DC fan lock	168
◑	●	☼	●	☼	E8	Input overcurrent detection	169
◑	☼	●	●	●	EA	Four-way valve abnormality (18 class only)	170
◑	☼	●	☼	●	F3	Discharge pipe temperature control	172
◑	☼	●	☼	☼	F6	High pressure control in cooling	173
◑	☼	☼	●	●	H0	Compressor sensor system abnormality (24/32 class only)	174
					H6	Position sensor abnormality	176
					H8	CT or related abnormality	179
					H9	Outdoor temperature thermistor or related abnormality	181
					J3	Discharge pipe thermistor or related abnormality	181
					J6	Outdoor heat exchanger thermistor or related abnormality	181
					J8	Liquid pipe thermistor or related abnormality	181
					J9	Gas pipe thermistor or related abnormality	181
					P4	Radiation fin thermistor or related abnormality	181
◑	☼	☼	●	☼	L3	Electrical box temperature rise	183
◑	●	●	●	☼	L4	Radiation fin temperature rise	186
◑	●	●	☼	●	L5	Output overcurrent detection	189

Note:

1. The error codes in the parenthesis ( ) are displayed only when the system is shut down.
2. When a sensor error occurs, check the remote controller display to determine which sensor is malfunctioning.
   If the remote controller does not indicate the error code, conduct the following procedure.
   ∗ Turn the power switch off and back on again. If the same LED indication appears again immediately after the power is turned on, the fault is in the thermistor.
   ∗ If the above condition does not result, the fault is in the CT.
3. The indoor unit error code may take the precedence in the remote controller display.

5. Troubleshooting for Indoor Unit

5.1 Indoor Unit PCB Abnormality

Remote Controller Display	A1
Method of Malfunction Detection	The system checks if the circuit works properly within the microcomputer of the indoor unit.
Malfunction Decision Conditions	The system cannot set the internal settings.
Supposed Causes	■ Wrong models interconnected ■ Defective indoor unit PCB ■ Disconnection of connector ■ Reduction of power supply voltage

Troubleshooting

Caution Be sure to turn off the power switch before connecting or disconnecting connectors, or parts may be damaged.

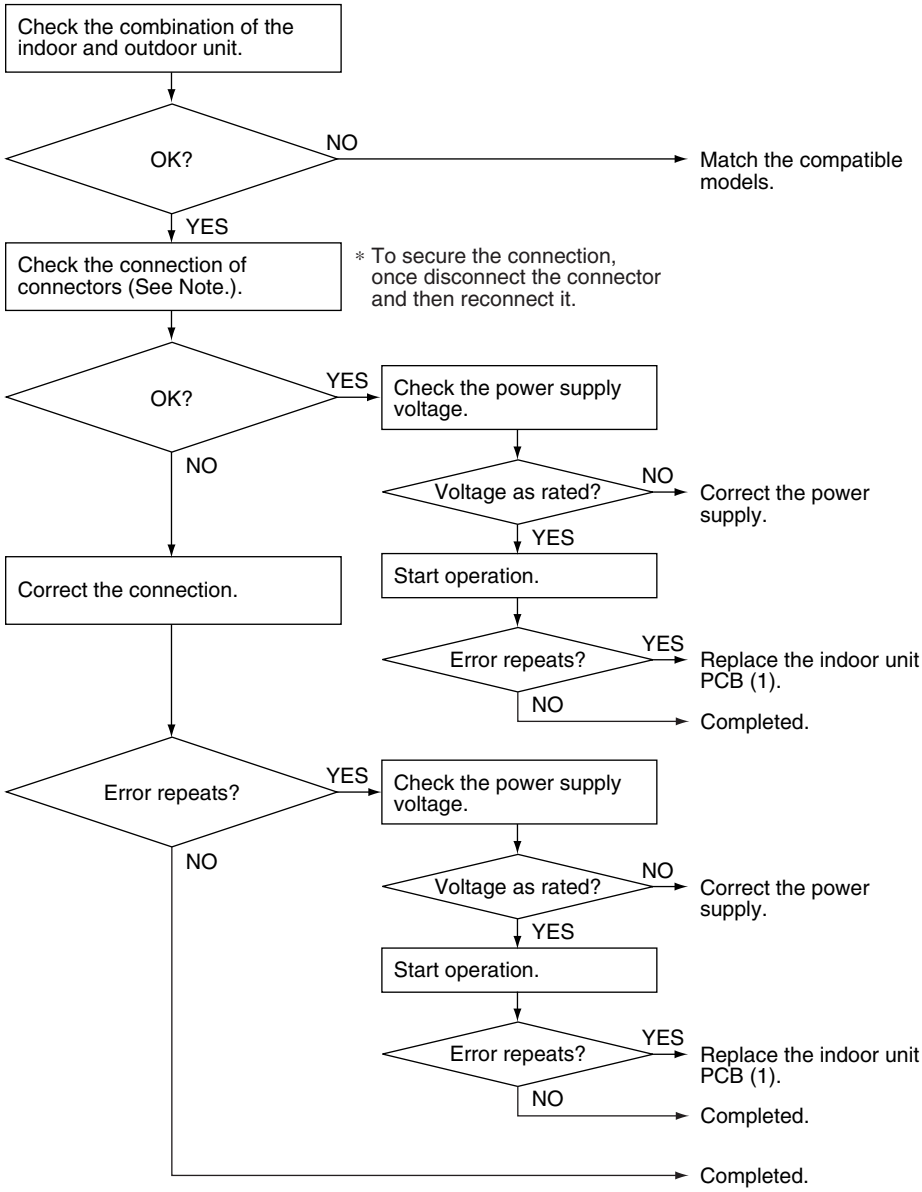

(R15270)

Note: Check the following connector.

Model Type	Connector
CTXS/FTXS series	Terminal board ~ Control PCB
CDXS/FDXS series	Terminal board ~ Control PCB

5.2 Freeze-up Protection Control or Heating Peak-cut Control

Remote Controller Display

A5

Method of Malfunction Detection

- Freeze-up protection control
  During cooling operation, the freeze-up protection control (operation halt) is activated according to the temperature detected by the indoor heat exchanger thermistor.
- Heating peak-cut control
  During heating operation, the temperature detected by the indoor heat exchanger thermistor is used for the heating peak-cut control (operation halt, outdoor fan stop, etc.)

Malfunction Decision Conditions

- Freeze-up protection control
  During cooling operation, the indoor heat exchanger temperature is below (32°F (0°C).
- Heating peak-cut control
  During heating operation, the indoor heat exchanger temperature is above 149°F (65°C).

Supposed Causes

- Short-circuited air
- Clogged air filter of the indoor unit
- Dust accumulation on the indoor heat exchanger
- Defective indoor heat exchanger thermistor
- Defective indoor unit PCB

Troubleshooting

Check No.01
Refer to P.191

Caution Be sure to turn off the power switch before connecting or disconnecting connectors, or parts may be damaged.

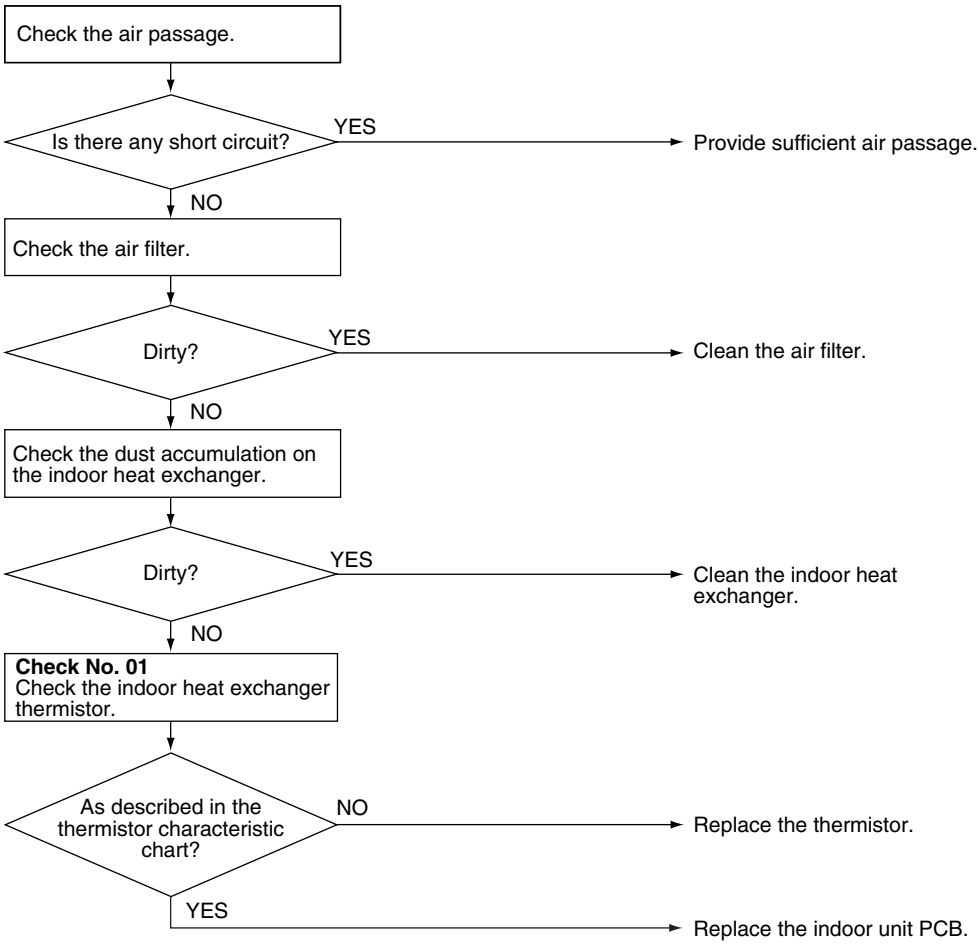

(R15715)

5.3 Fan Motor or Related Abnormality

5.3.1 DC Motor (CTXS/FTXS Series)

Remote Controller Display

A6

Method of Malfunction Detection

The rotation speed detected by the Hall IC during fan motor operation is used to determine abnormal fan motor operation.

Malfunction Decision Conditions

The detected rotation speed does not reach the demanded rotation speed of the target tap, and is less than 50% of the maximum fan motor rotation speed.

Supposed Causes

- Layer short inside the fan motor winding
- Breaking of wire inside the fan motor
- Breaking of the fan motor lead wires
- Defective capacitor of the fan motor
- Defective indoor unit PCB

Troubleshooting

Check No.02
Refer to P.192

Caution Be sure to turn off the power switch before connecting or disconnecting connectors, or parts may be damaged.

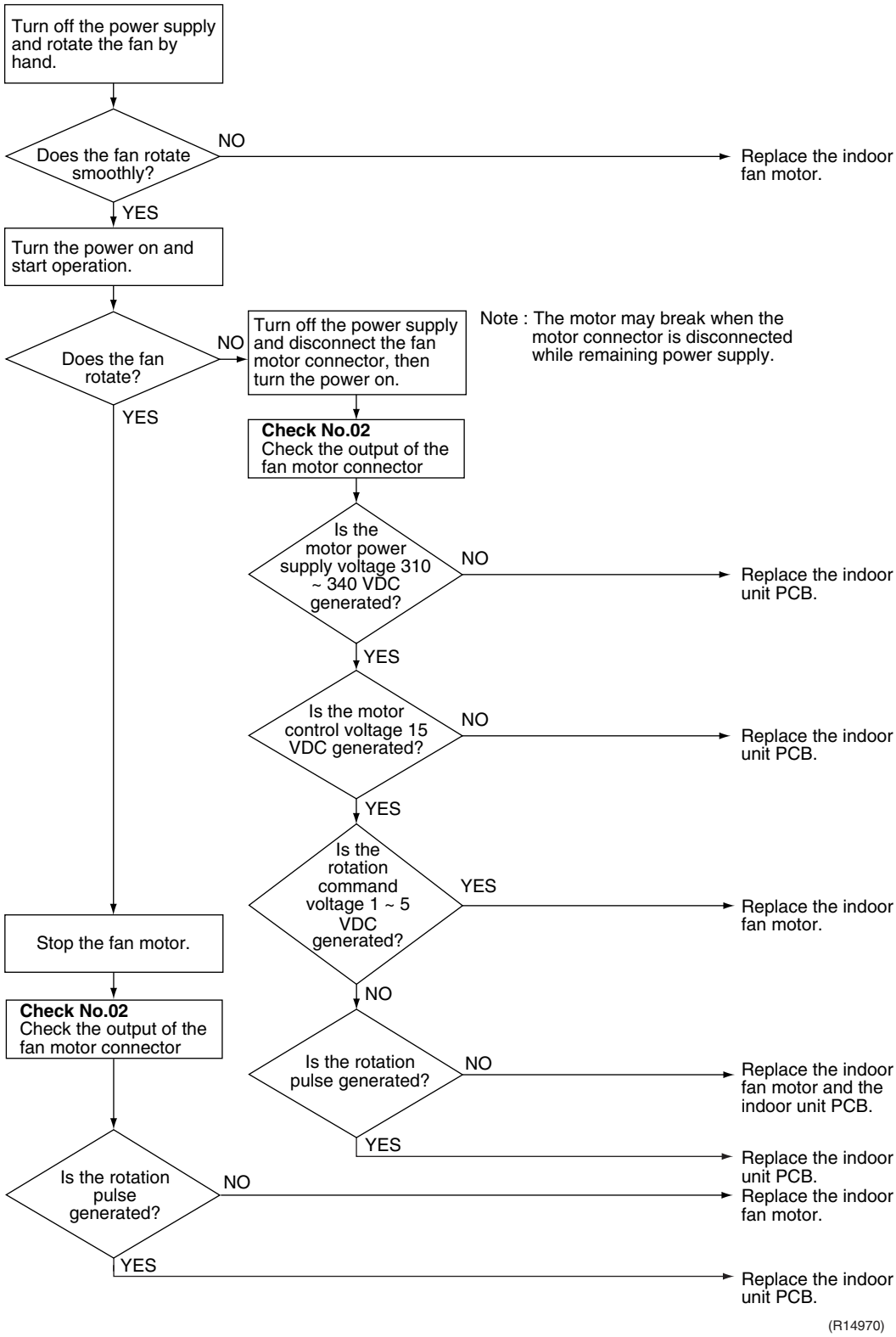

5.3.2 AC Motor (CDXS/FDXS Series)

Remote Controller Display

A6

Method of Malfunction Detection

The rotation speed detected by the Hall IC during fan motor operation is used to determine abnormal fan motor operation.

Malfunction Decision Conditions

The detected rotation speed does not reach the demanded rotation speed of the target tap, and is less than 50% of the maximum fan motor rotation speed.

Supposed Causes

- Layer short inside the fan motor winding
- Breaking of wire inside the fan motor
- Breaking of the fan motor lead wires
- Defective capacitor of the fan motor
- Defective indoor unit PCB

Troubleshooting

Check No.04
Refer to P.192

Caution Be sure to turn off the power switch before connecting or disconnecting connectors, or parts may be damaged.

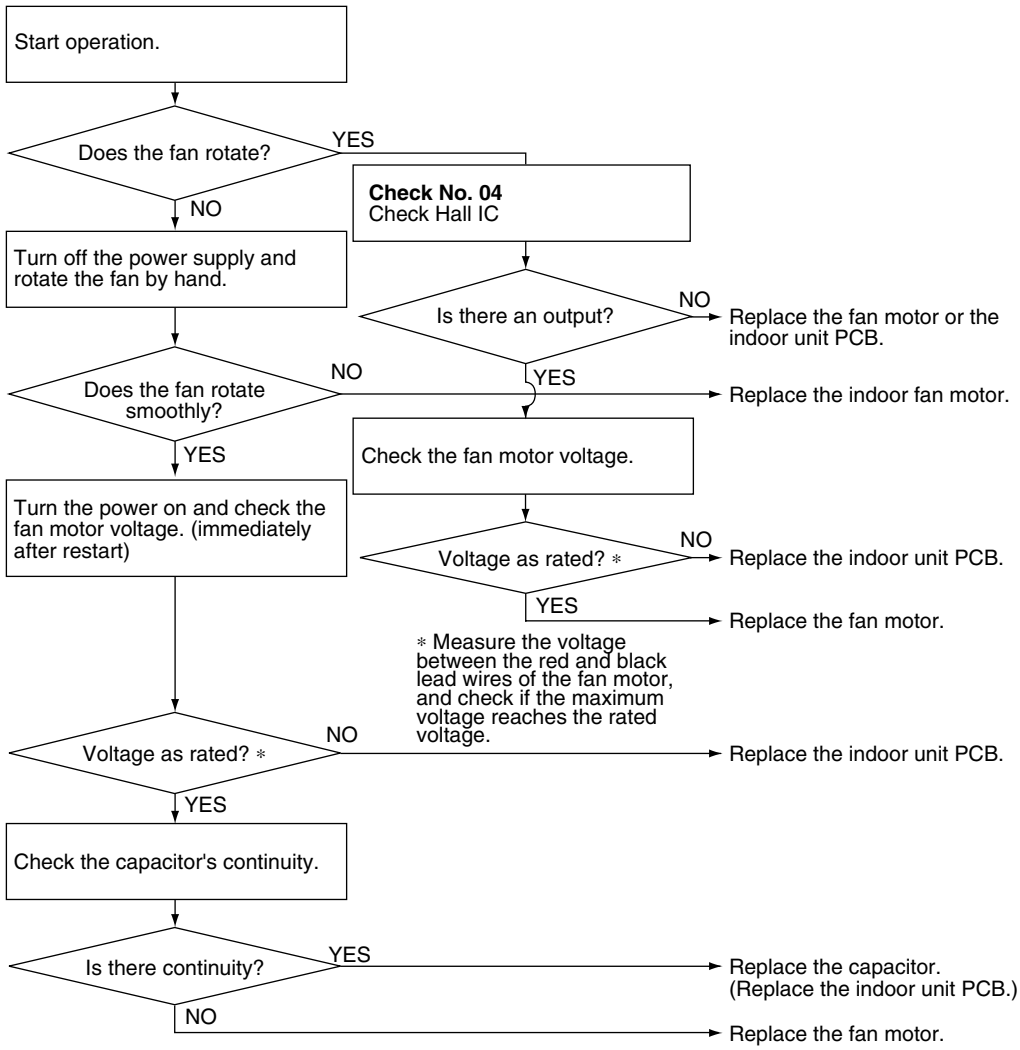

(R17393)

5.4 Thermistor or Related Abnormality (Indoor Unit)

Remote Controller Display

C4, C9

Method of Malfunction Detection

The temperatures detected by the thermistors are used to determine thermistor errors.

Malfunction Decision Conditions

The thermistor input is more than 4.96 V or less than 0.04 V during compressor operation.

Supposed Causes

- Disconnection of connector
- Defective thermistor
- Defective indoor unit PCB

Troubleshooting

Check No.01
Refer to P.191

Caution Be sure to turn off the power switch before connecting or disconnecting connectors, or parts may be damaged.

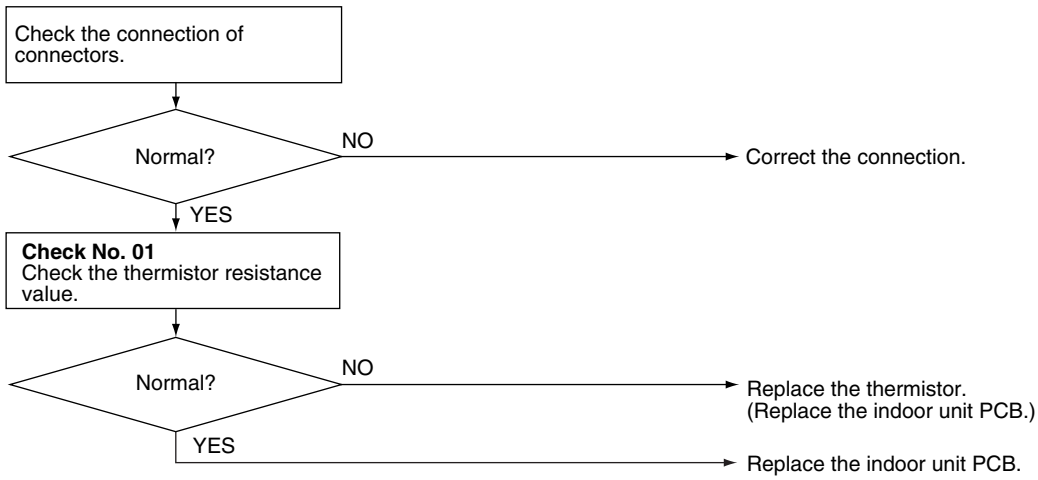

(R15717)

C4 : Indoor heat exchanger thermistor
C9 : Room temperature thermistor

5.5 Signal Transmission Error (between Indoor Unit and Outdoor Unit)

Remote Controller Display

U4

Method of Malfunction Detection

The data received from the outdoor unit in indoor unit-outdoor unit signal transmission is checked whether it is normal.

Malfunction Decision Conditions

The data sent from the outdoor unit cannot be received normally, or the content of the data is abnormal.

Supposed Causes

- Wiring error
- Breaking of the connection wires between the indoor and outdoor units (wire No. 3)
- Defective outdoor unit PCB
- Defective indoor unit PCB
- Disturbed power supply waveform

Troubleshooting

Check No.11
Refer to P.193

Caution Be sure to turn off the power switch before connecting or disconnecting connectors, or parts may be damaged.

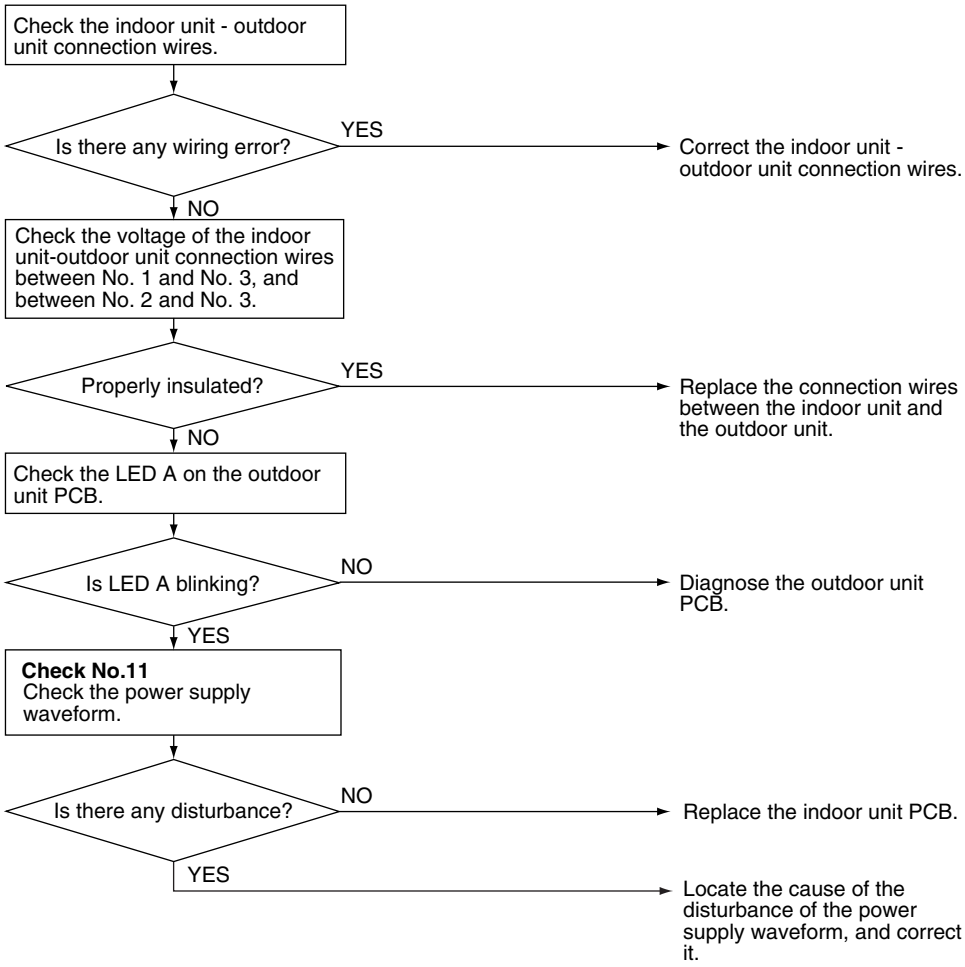

(R15782)

5.6 Unspecified Voltage (between Indoor Unit and Outdoor Unit)

Remote Controller Display

UA

Method of Malfunction Detection

The supply power is detected for its requirements (different from pair type and multi type) by the indoor / outdoor transmission signal.

Malfunction Decision Conditions

The pair type and multi type are interconnected.

Supposed Causes

- Wrong models interconnected
- Wrong wiring of connecting wires
- Wrong indoor unit PCB or outdoor unit PCB mounted
- Defective indoor unit PCB
- Defective outdoor unit PCB

Troubleshooting

Caution Be sure to turn off the power switch before connecting or disconnecting connectors, or parts may be damaged.

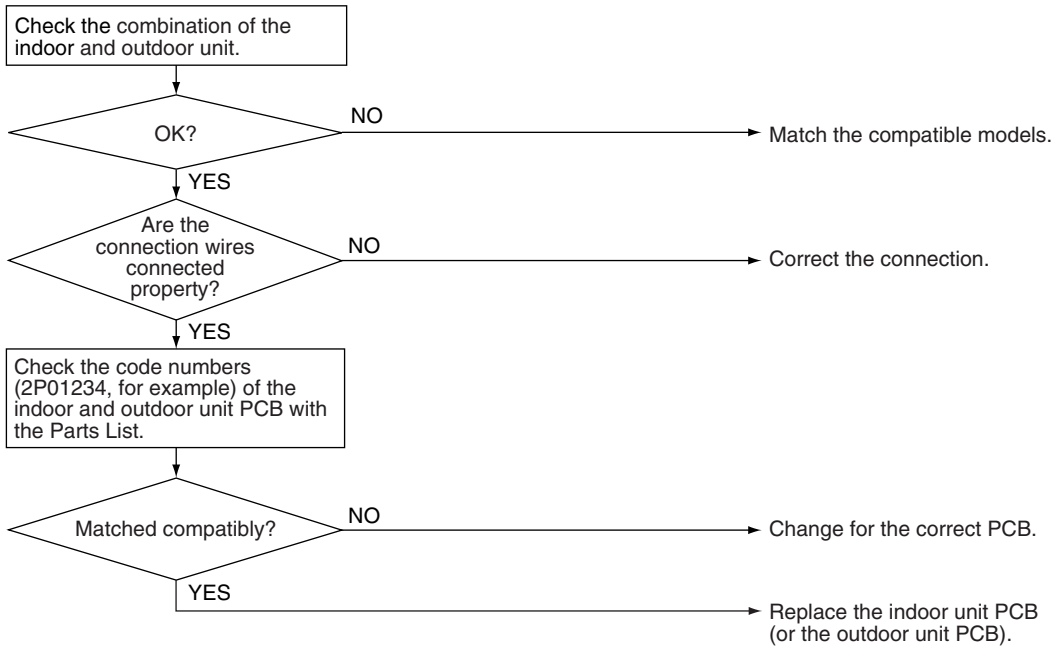

(R11707)

6. Troubleshooting for Outdoor Unit

6.1 Refrigerant Shortage

Remote Controller Display

UD

Outdoor Unit LED Display

A ◑ 1 ● 2 ● 3 ☼ 4 ☼

Method of Malfunction Detection

Refrigerant shortage detection I :
Refrigerant shortage is detected by checking the input current value and the compressor output frequency. If the refrigerant is short, the input current is smaller than the normal value.

Refrigerant shortage detection II :
Refrigerant shortage is detected by checking the discharge pipe temperature and the opening of the outdoor electronic expansion valve. If the refrigerant is short, the discharge pipe temperature tends to rise.

Malfunction Decision Conditions

Refrigerant shortage detection I:
The following conditions continue for 7 minutes.

<18 class>
- Input current × input voltage ≤ **A** × output frequency + **B**
- Output frequency > **C**

A (–)	**B** (W)	**C** (Hz)
1756/256	50	55

<24/32 class>
- Input current ≤ **D** × output frequency + **E**
- Output frequency > **F**

D (–)	**E** (A)	**F** (Hz)
27/1000	2	40

Refrigerant shortage detection II:
The following conditions continue for 80 seconds.
- Opening of the outdoor electronic expansion valve ≥ **G**
- Discharge pipe temperature (°C) > **H** × target discharge pipe temperature (°C) + **J** (°C)
  (Discharge pipe temperature (°F) > **H** × target discharge pipe temperature (°F) + **K** (°F))

G (pulse)	**H** (–)	**J** (°C)	**K** (°F)
450	255/256	cooling: 20, heating: 40	cooling: 36.1, heating: 72.1

- If the error repeats, the system is shut down.
- Reset condition: Continuous run for about 60 minutes without any other error

Supposed Causes

- Disconnection of the discharge pipe thermistor, indoor or outdoor heat exchanger thermistor, room or outdoor temperature thermistor
- Closed stop valve
- Refrigerant shortage (refrigerant leakage)
- Poor compression performance of compressor
- Defective outdoor electronic expansion valve

Troubleshooting

Check No.01
Refer to P.191

Check No.12
Refer to P.194

18 class

Caution Be sure to turn off the power switch before connecting or disconnecting connectors, or parts may be damaged.

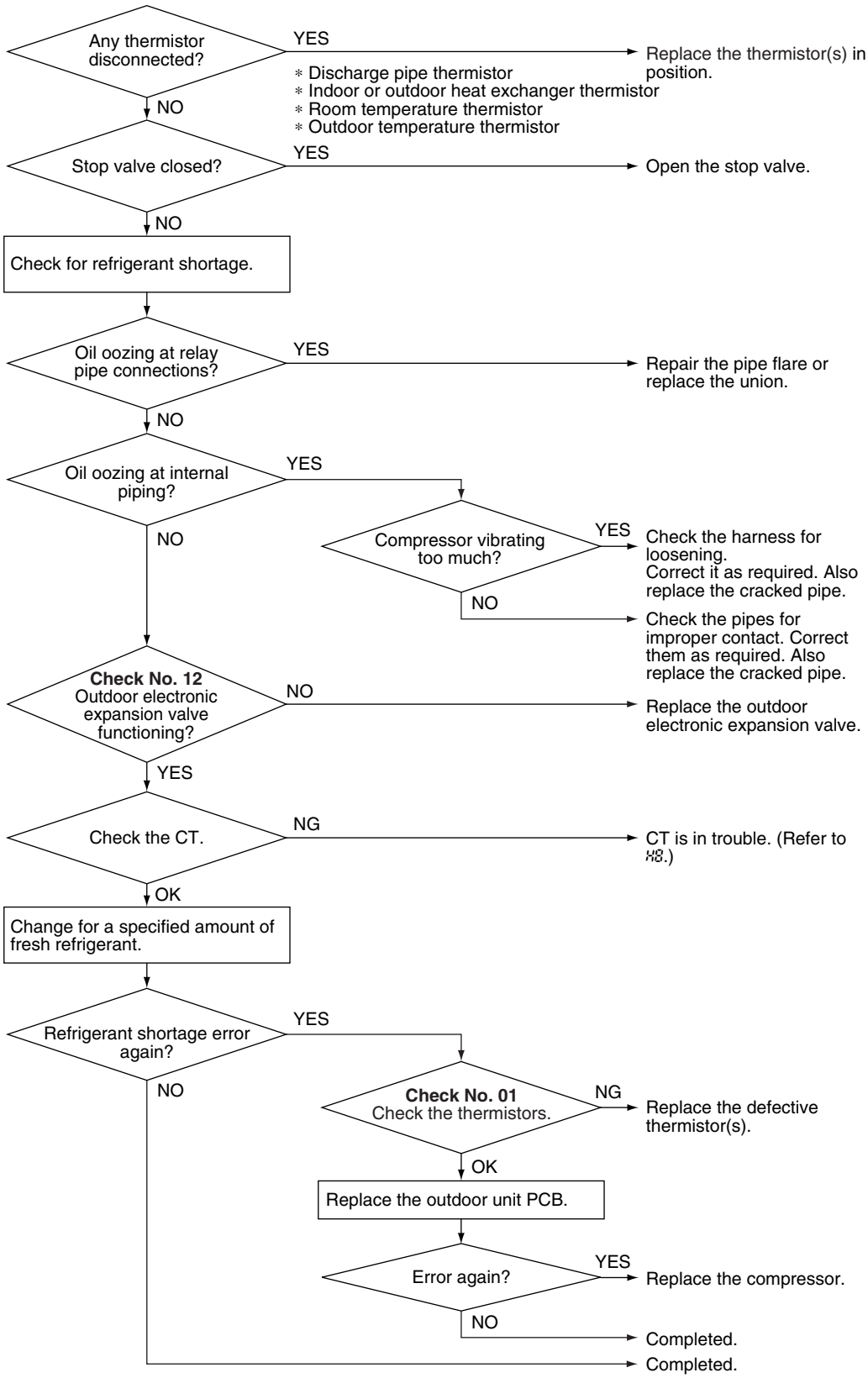

Troubleshooting

24/32 class

Check No.01
Refer to P.191

Check No.12
Refer to P.194

Caution Be sure to turn off the power switch before connecting or disconnecting connectors, or parts may be damaged.

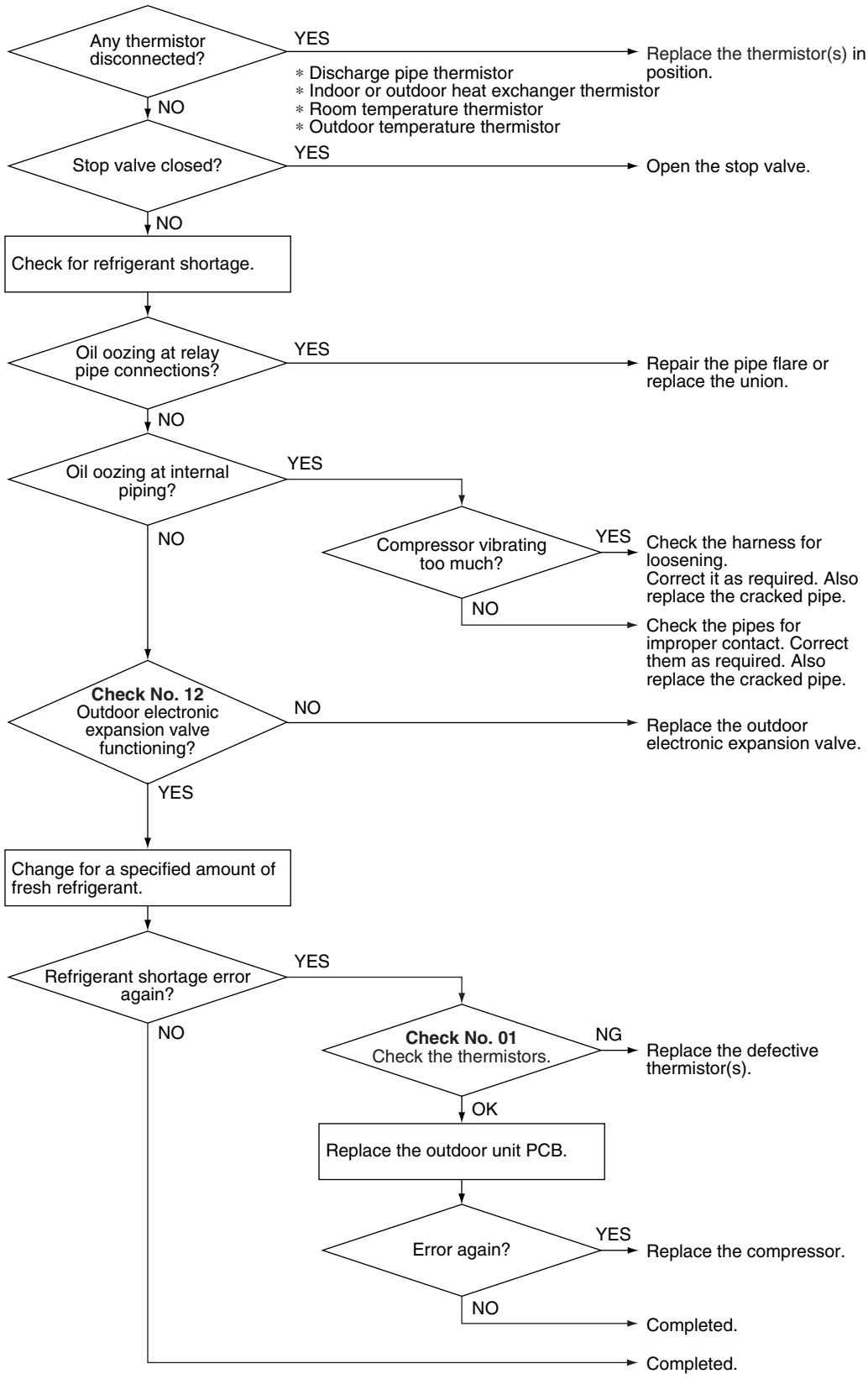

(R17254)

6.2 Low-voltage Detection or Over-voltage Detection

Remote Controller Display

U2

Outdoor Unit LED Display

A ◑ 1 ☼ 2 ● 3 ● 4 ☼

Method of Malfunction Detection

★ Indoor Unit

The zero-cross detection of the power supply is evaluated by the indoor unit PCB.

★ Outdoor Unit

Low-voltage detection:
An abnormal voltage drop is detected by the DC voltage detection circuit.

Over-voltage detection:
An abnormal voltage rise is detected by the over-voltage detection circuit.

Malfunction Decision Conditions

★ Indoor Unit

There is no zero-cross detection in approximately 10 seconds.

★ Outdoor Unit

Low-voltage detection:
- The voltage detected by the DC voltage detection circuit is below 150 V for 0.1 second.
- If the error repeats, the system is shut down.
- Reset condition: Continuous run for about 60 minutes without any other error

Over-voltage detection:
- An over-voltage signal is fed from the over-voltage detection circuit to the microcomputer.
- The compressor stops if the error occurs, and restarts automatically after 3-minute standby.

Supposed Causes

- Supply voltage is not as specified.
- Defective DC voltage detection circuit
- Defective over-voltage detection circuit
- Defective PAM control part
- Disconnection of compressor harness
- Noise
- Momentary fall of voltage
- Momentary power failure
- Defective indoor unit PCB

Troubleshooting

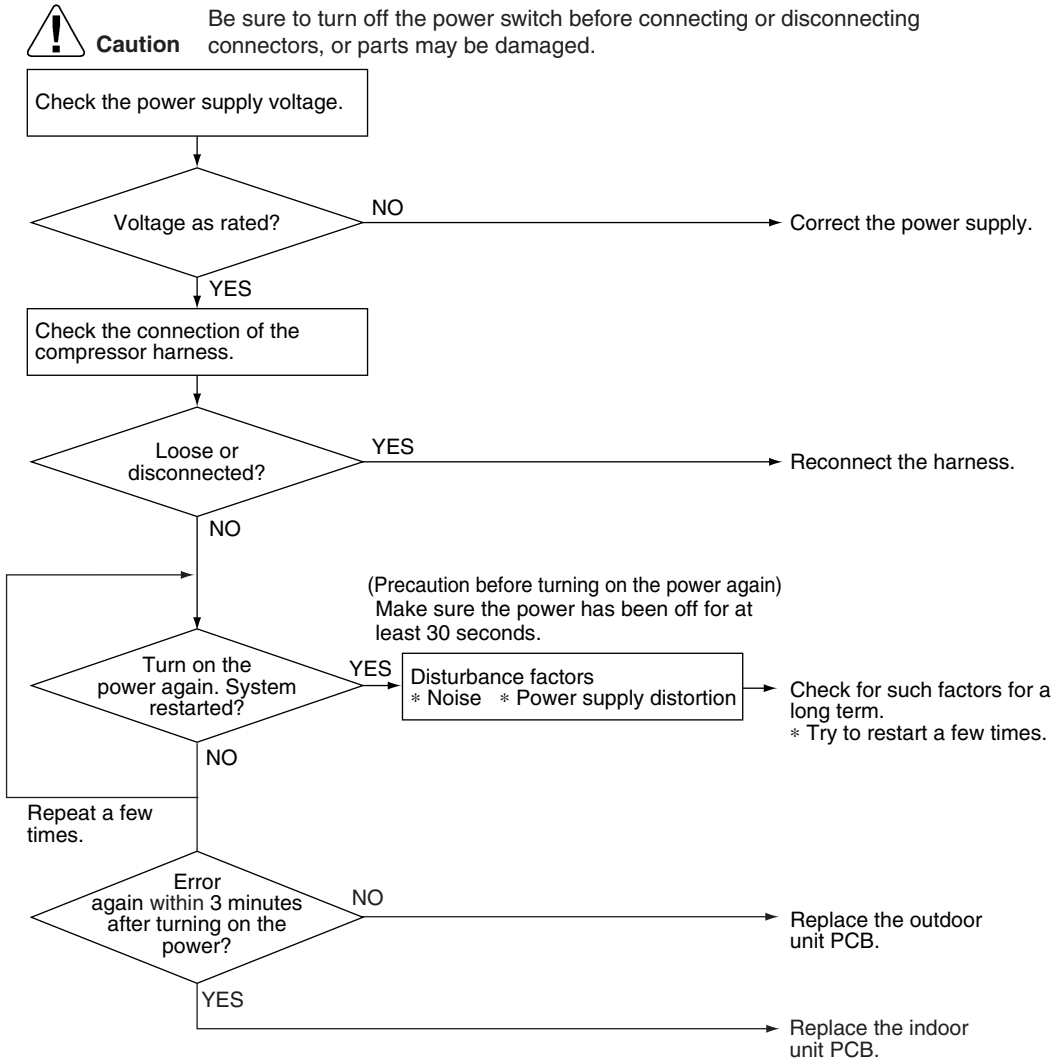

6.3 Signal Transmission Error (on Outdoor Unit PCB) (24/32 Class Only)

Remote Controller Display

U7

Outdoor Unit LED Display

A ◑ 1 ● 2 ☼ 3 ☼ 4 ☼

Method of Malfunction Detection

Communication error between microcomputer mounted on the main PCB and PM1.

Malfunction Decision Conditions

- The abnormality is determined when the data sent from the PM1 can not be received for 9 seconds.
- The error counter is reset when the data from the PM1 can be successfully received.

Supposed Causes

- Defective outdoor unit PCB

Troubleshooting

Caution Be sure to turn off the power switch before connecting or disconnecting connectors, or parts may be damaged.

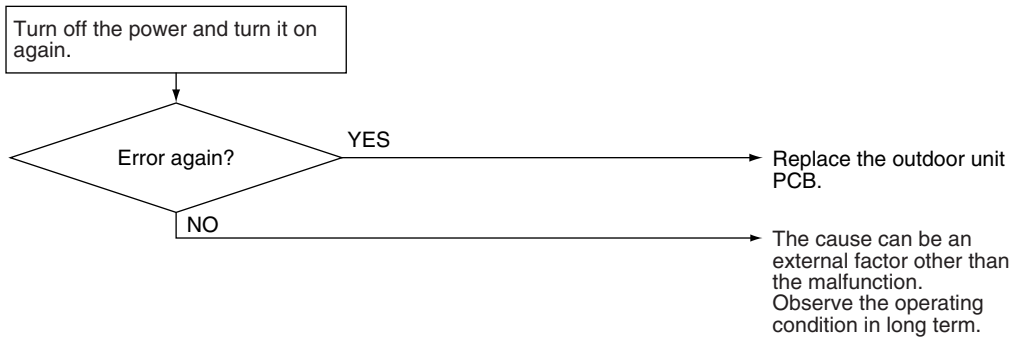

(R7185)

6.4 Unspecified Voltage (between Indoor Unit and Outdoor Unit) / Anti-icing Function in Other Rooms

Remote Controller Display

UA, UH

Outdoor Unit LED Display

A ◑ 1 ● 2 ● 3 ● 4 ●

Method of Malfunction Detection

A wrong connection is detected by checking the combination of indoor and outdoor units on the microcomputer.

Malfunction Decision Conditions

- Anti-icing function in other rooms
- Unspecified internal and/or external voltages
- Mismatching of indoor and outdoor units

Supposed Causes

- Anti-icing function in other rooms
- Wrong models interconnected
- Wrong indoor unit PCB or outdoor unit PCB mounted

Troubleshooting

Caution Be sure to turn off the power switch before connecting or disconnecting connectors, or parts may be damaged.

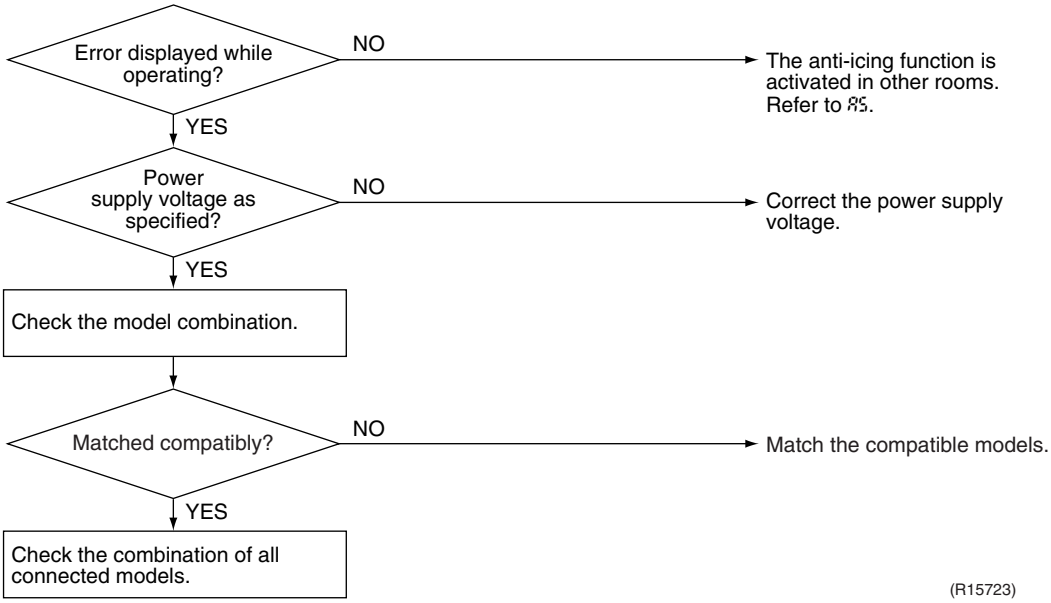

Note: Refer to “Anti-icing function” on page 163 for detail.

6.5 Anti-icing Function

Remote Controller Display	A5
Outdoor Unit LED Display	A ◑ 1 ☼ 2 ● 3 ☼ 4 ☼
Method of Malfunction Detection	During cooling operation, indoor unit icing is detected by checking the temperatures sensed by the indoor heat exchanger thermistor and room temperature thermistor that are located in a shut-down room.
Malfunction Decision Conditions	■ In cooling operation, the both conditions (A) and (B) are met for 5 minutes. (A) Room temperature – Indoor heat exchanger temperature ≥ 18°F (10°C) (B) Indoor heat exchanger temperature ≤ 30.2°F (–1°C) ■ If the error repeats, the system is shut down. ■ Reset condition: Continuous run for about 60 minutes without any other error
Supposed Causes	■ Wrong wiring or piping ■ Defective outdoor electronic expansion valve ■ Short-circuited air ■ Defective indoor heat exchanger thermistor ■ Defective room temperature thermistor

Troubleshooting

Check No.01
Refer to P.191

Check No.12
Refer to P.194

Caution Be sure to turn off the power switch before connecting or disconnecting connectors, or parts may be damaged.

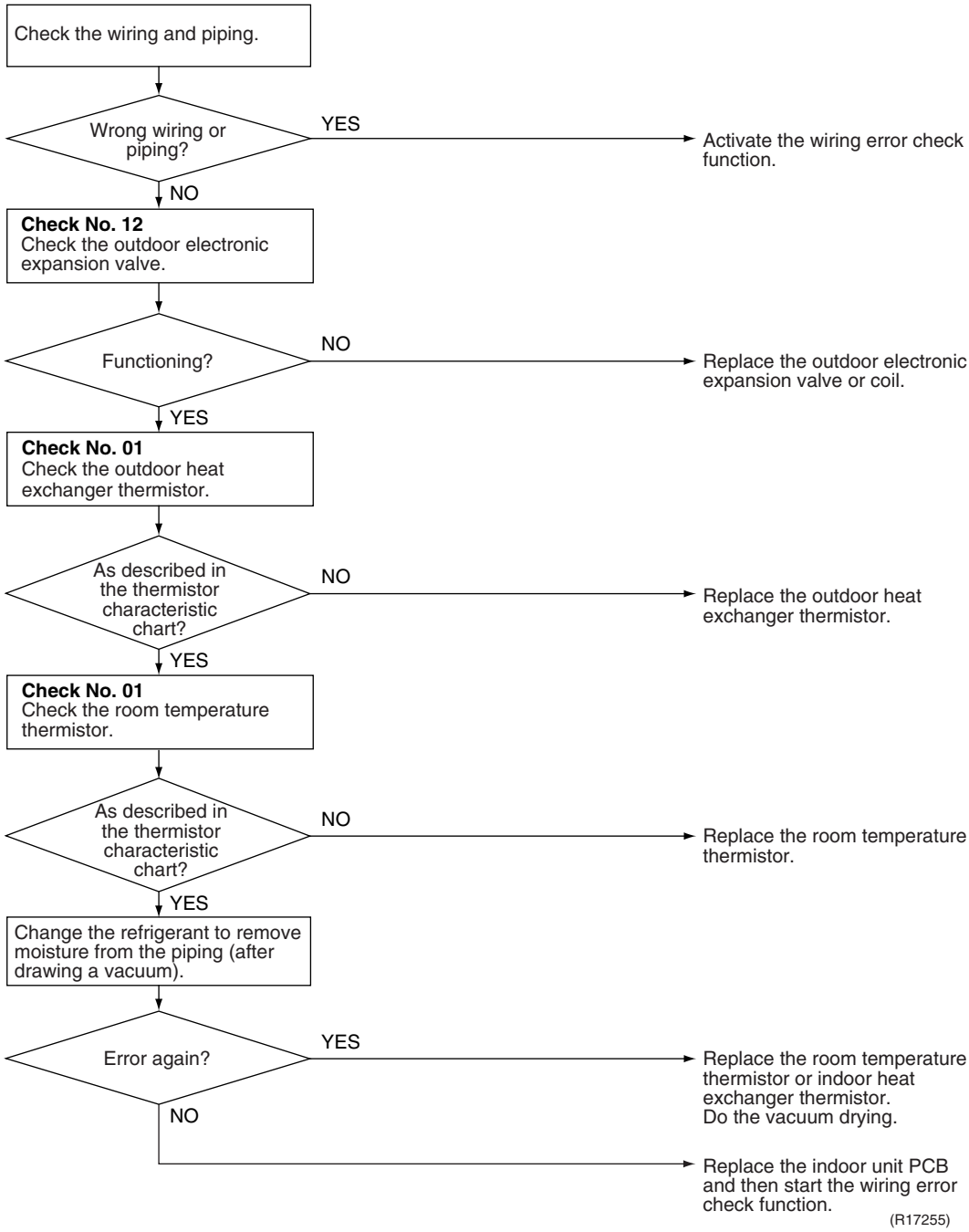

6.6 Outdoor Unit PCB Abnormality (24/32 Class Only)

Remote Controller Display

E1

Outdoor Unit LED Display

A ◑ 1 ☼ 2 ☼ 3 ☼ 4 ●

Method of Malfunction Detection

Detect within the program of the microcomputer.

Malfunction Decision Conditions

The program of the microcomputer is in abnormal running order.

Supposed Causes

- Defective outdoor unit PCB
- Noise
- Momentary fall of voltage
- Momentary power failure

Troubleshooting

Caution Be sure to turn off the power switch before connecting or disconnecting connectors, or parts may be damaged.

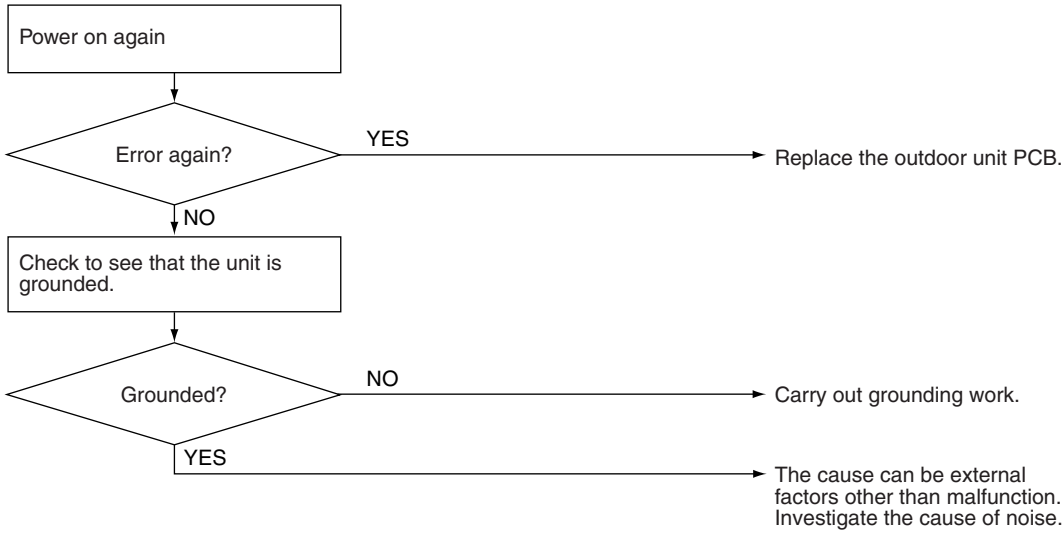

(R7183)

6.7 OL Activation (Compressor Overload)

Remote Controller Display

ES

Outdoor Unit LED Display

A ◑ 1 ☼ 2 ● 3 ☼ 4 ●

Method of Malfunction Detection

A compressor overload is detected through compressor OL.

Malfunction Decision Conditions

- If the error repeats, the system is shut down.
- Reset condition: Continuous run for about 60 minutes without any other error

∗ The operating temperature condition is not specified.

Supposed Causes

- Defective discharge pipe thermistor
- Defective outdoor electronic expansion valve or coil
- Defective four way valve or coil
- Defective outdoor unit PCB
- Refrigerant shortage
- Water mixed in refrigerant
- Defective stop valve

Troubleshooting

Check No.01
Refer to P.191

Check No.12
Refer to P.194

Check No.13
Refer to P.195

Check No.14
Refer to P.195

Caution Be sure to turn off the power switch before connecting or disconnecting connectors, or parts may be damaged.

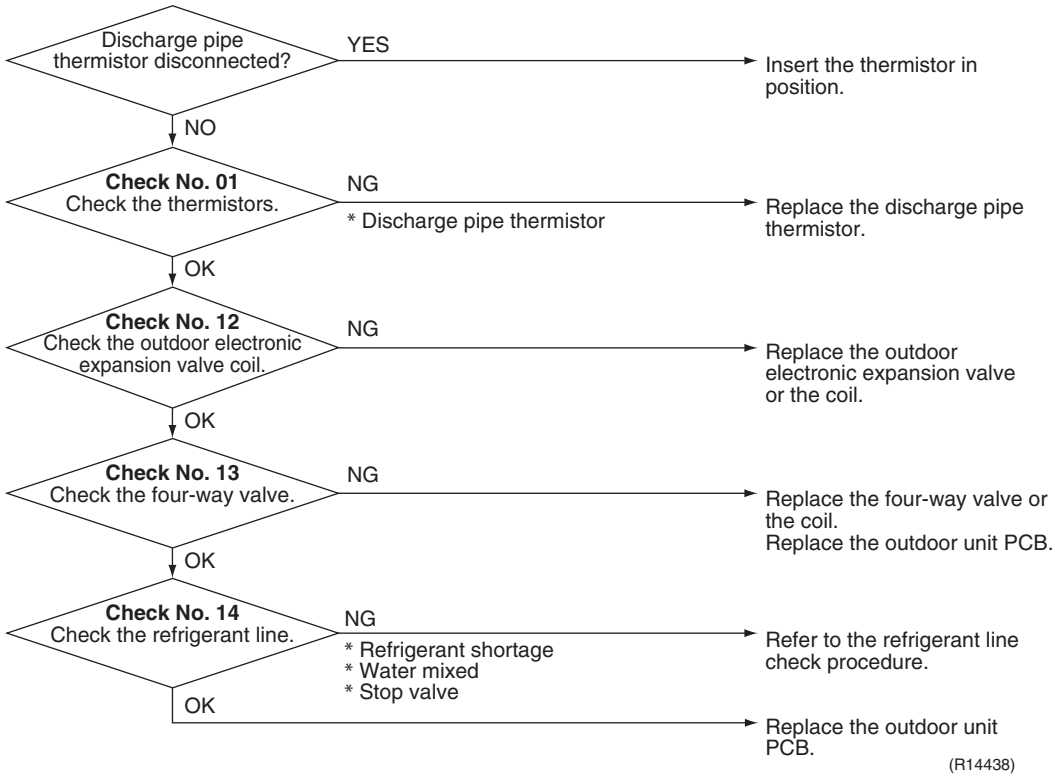

6.8 Compressor Lock

Remote Controller Display

E6

Outdoor Unit LED Display

A ◑ 1 ● 2 ☼ 3 ☼ 4 ●

Method of Malfunction Detection

A compressor lock is detected by checking the compressor running condition through the position detection circuit.

Malfunction Decision Conditions

- Judging from the current waveform generated when high-frequency voltage is applied to the compressor.
- If the error repeats, the system is shut down.
- Reset condition: Continuous run for about 5 minutes without any other error

Supposed Causes

- Compressor locked

Troubleshooting

Check No.15
Refer to P.196

Caution Be sure to turn off the power switch before connecting or disconnecting connectors, or parts may be damaged.
(Precaution before turning on the power again)
Make sure the power has been off for at least 30 seconds.

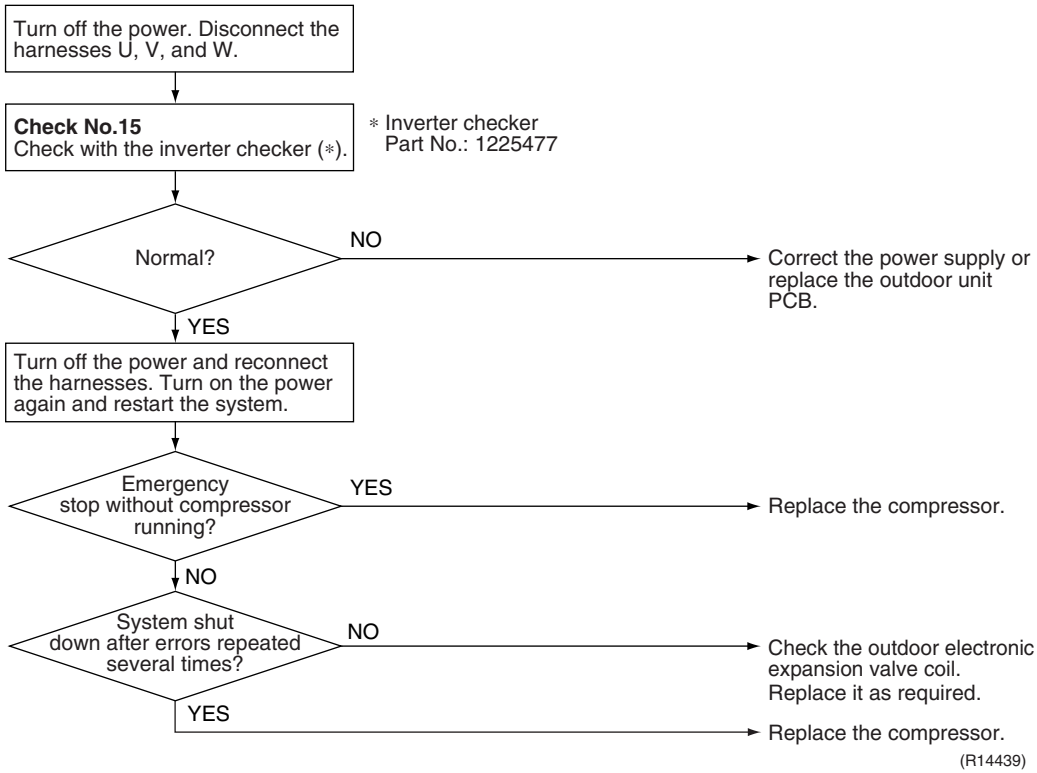

6.9 DC Fan Lock

Remote Controller Display

E7

Outdoor Unit LED Display

A ◑ 1 ☼ 2 ☼ 3 ☼ 4 ☼

Method of Malfunction Detection

An error is determined with the high-voltage fan motor rotation speed detected by the Hall IC.

Malfunction Decision Conditions

- The fan does not start in 30 seconds even when the fan motor is running.
- If the error repeats, the system is shut down.
- Reset condition: Continuous run for about 5 minutes without any other error

Supposed Causes

- Disconnection of the fan motor
- Foreign matter stuck in the fan
- Defective fan motor
- Defective outdoor unit PCB

Troubleshooting

Check No.16
Refer to P.197

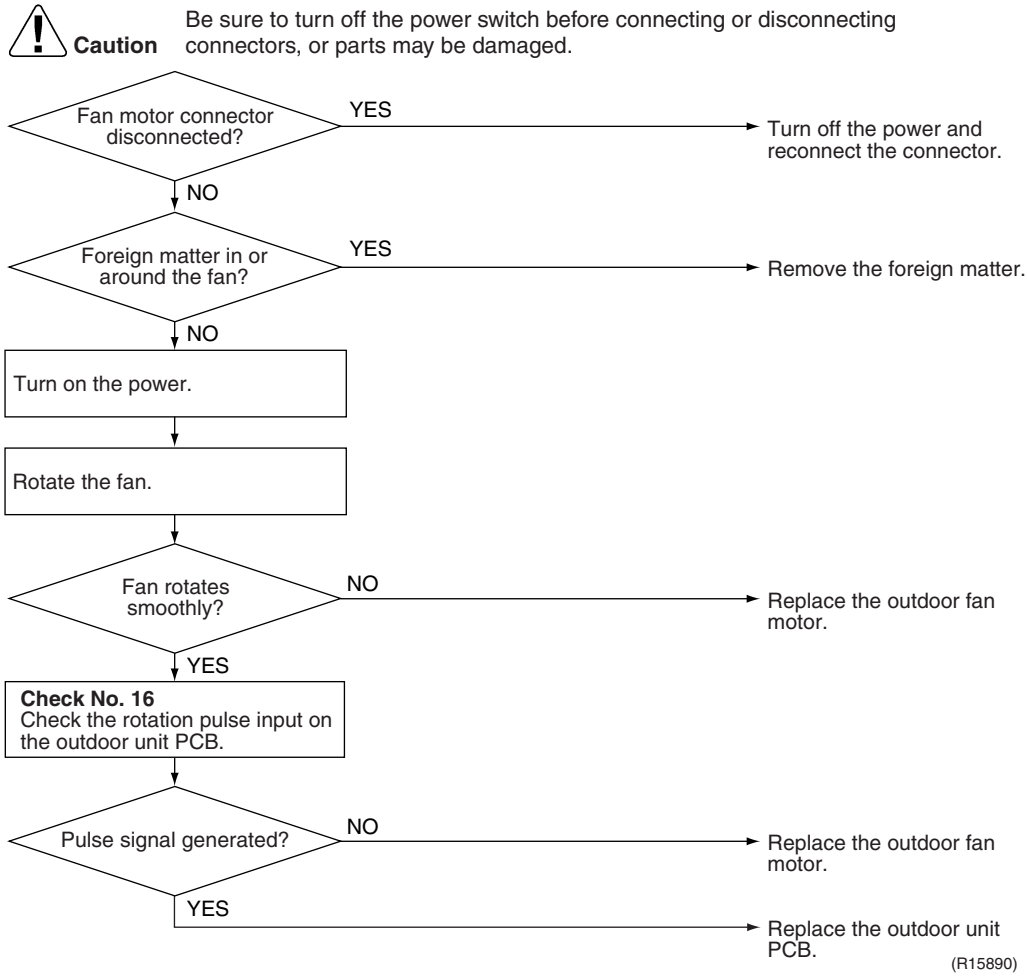

6.10 Input Overcurrent Detection

Remote Controller Display

E8

Outdoor Unit LED Display

A ◑ 1 ● 2 ☼ 3 ● 4 ☼

Method of Malfunction Detection

Detected by checking the input current value

Malfunction Decision Conditions

- The input current is at a certain value (depending on the condition) for 2.5 seconds.
- The compressor halts if the error occurs, and restarts automatically after 3-minute standby.

Supposed Causes

- Outdoor temperature is out of operation range.
- Defective compressor
- Defective power module
- Defective outdoor unit PCB
- Short circuit

Troubleshooting

Check No.15
Refer to P.196

Check No.17
Refer to P.198

Check No.18
Refer to P.198

Caution Be sure to turn off the power switch before connecting or disconnecting connectors, or parts may be damaged.

∗ An input overcurrent may result from wrong internal wiring. If the system is interrupted by an input overcurrent after the wires have been disconnected and reconnected for part replacement, check the wiring again.

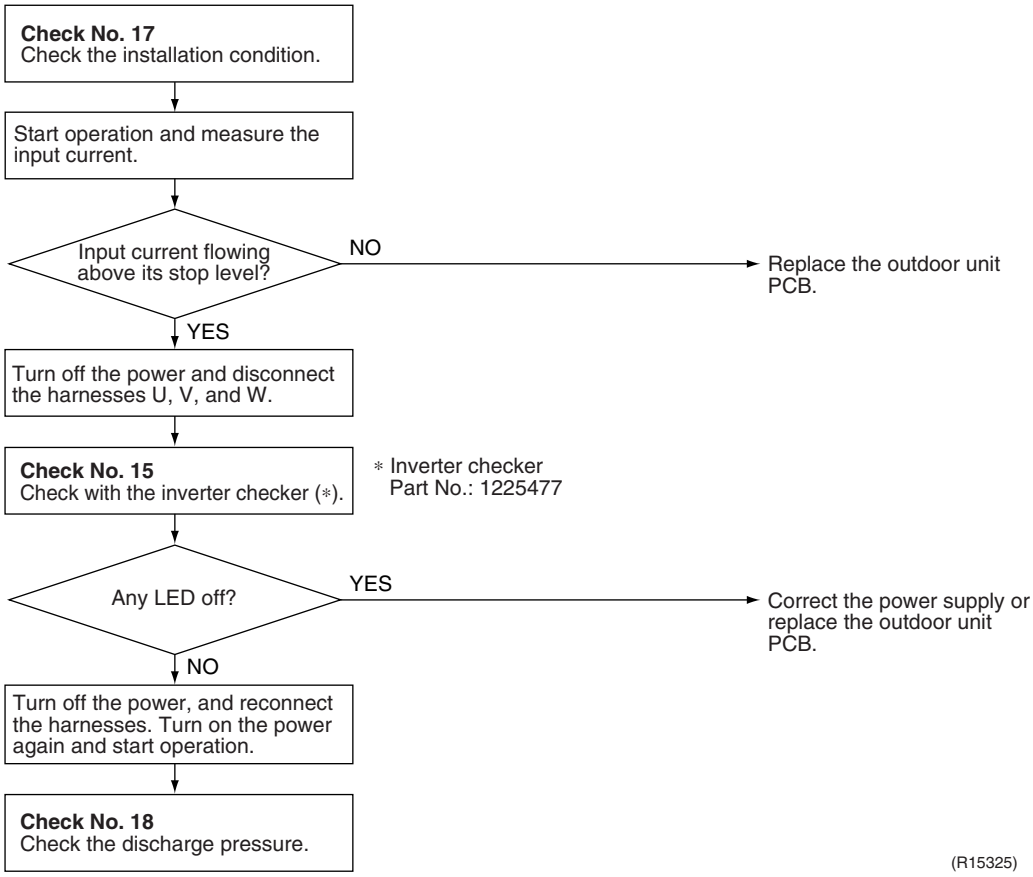

(R15325)

6.11 Four Way Valve Abnormality (18 Class Only)

Remote Controller Display	EA
Outdoor Unit LED Display	A ◑ 1 ☼ 2 ● 3 ● 4 ●
Method of Malfunction Detection	The liquid pipe thermistor and the outdoor heat exchanger thermistor are checked to see if they function within their normal ranges in the operating mode.
Malfunction Decision Conditions	Either of the following conditions occurs 6 minutes after the compressor has started. ■ Cooling operation The lowest liquid pipe temperature among the rooms in operation –Tde > 5°C (41°F) ■ Heating operation The highest liquid pipe temperature among the rooms in operation –Tde < 0°C (32°F) Tde: outdoor heat exchanger temperature
Supposed Causes	■ Poor connector contact ■ Defective thermistor ■ Defective outdoor unit PCB ■ Defective four-way valve, coil, or harness ■ Foreign substance mixed in refrigerant

Troubleshooting

Check No.01
Refer to P.191

Check No.13
Refer to P.195

Check No.14
Refer to P.195

Caution Be sure to turn off the power switch before connecting or disconnecting connectors, or parts may be damaged.

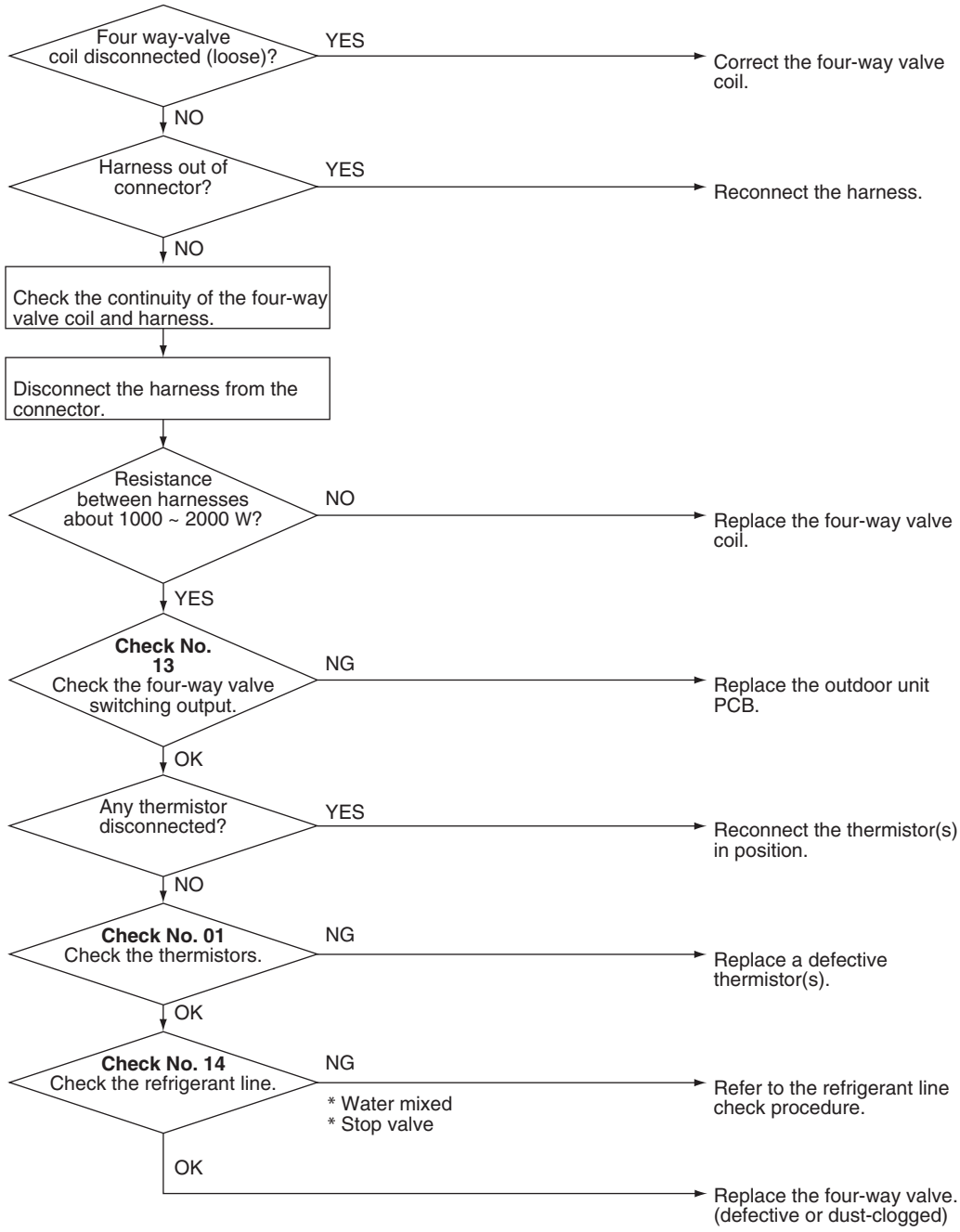

6.12 Discharge Pipe Temperature Control

Remote Controller Display

F3

Outdoor Unit LED Display

A ◑ 1 ☼ 2 ● 3 ☼ 4 ●

Method of Malfunction Detection

Detected by the discharge pipe thermistor

Malfunction Decision Conditions

- If the temperature detected by the discharge pipe thermistor rises above **A**, the compressor stops.
- The error is cleared when the discharge pipe temperature is dropped below **B**.

A	B
248°F(120°C)	224.6°F(107°C)

- If the error repeats, the system is shut down.
- Reset condition: Continuous run for about 60 minutes without any other error

Supposed Causes

- Defective discharge pipe thermistor
  (Defective outdoor heat exchanger thermistor or outdoor temperature thermistor)
- Defective outdoor electronic expansion valve or coil
- Refrigerant shortage
- Defective four-way valve
- Water mixed in refrigerant
- Defective stop valve
- Defective outdoor unit PCB

Troubleshooting

Check No.01
Refer to P.191

Check No.12
Refer to P.194

Check No.14
Refer to P.195

Caution Be sure to turn off the power switch before connecting or disconnecting connectors, or parts may be damaged.

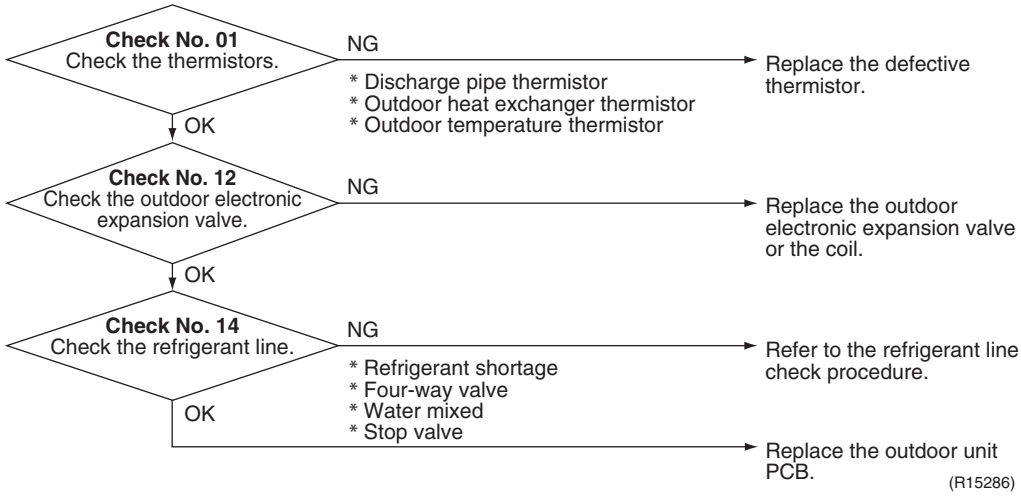

6.13 High Pressure Control in Cooling

Remote Controller Display

F6

Outdoor Unit LED Display

A ◑ 1 ☼ 2 ● 3 ☼ 4 ☼

Method of Malfunction Detection

High pressure control (operation halt, frequency drop, etc.) is activated in cooling operation if the temperature sensed by the outdoor heat exchanger thermistor exceeds the limit.

Malfunction Decision Conditions

- The temperature sensed by the outdoor heat exchanger thermistor rises above about 65°C (149°F).
- The error is cleared when the temperature drops below about 50°C (122°F).

Supposed Causes

- The installation space is not large enough.
- Dirty outdoor heat exchanger
- Defective outdoor fan motor
- Defective stop valve
- Defective outdoor electronic expansion valve or coil
- Defective outdoor heat exchanger thermistor
- Defective outdoor unit PCB

Troubleshooting

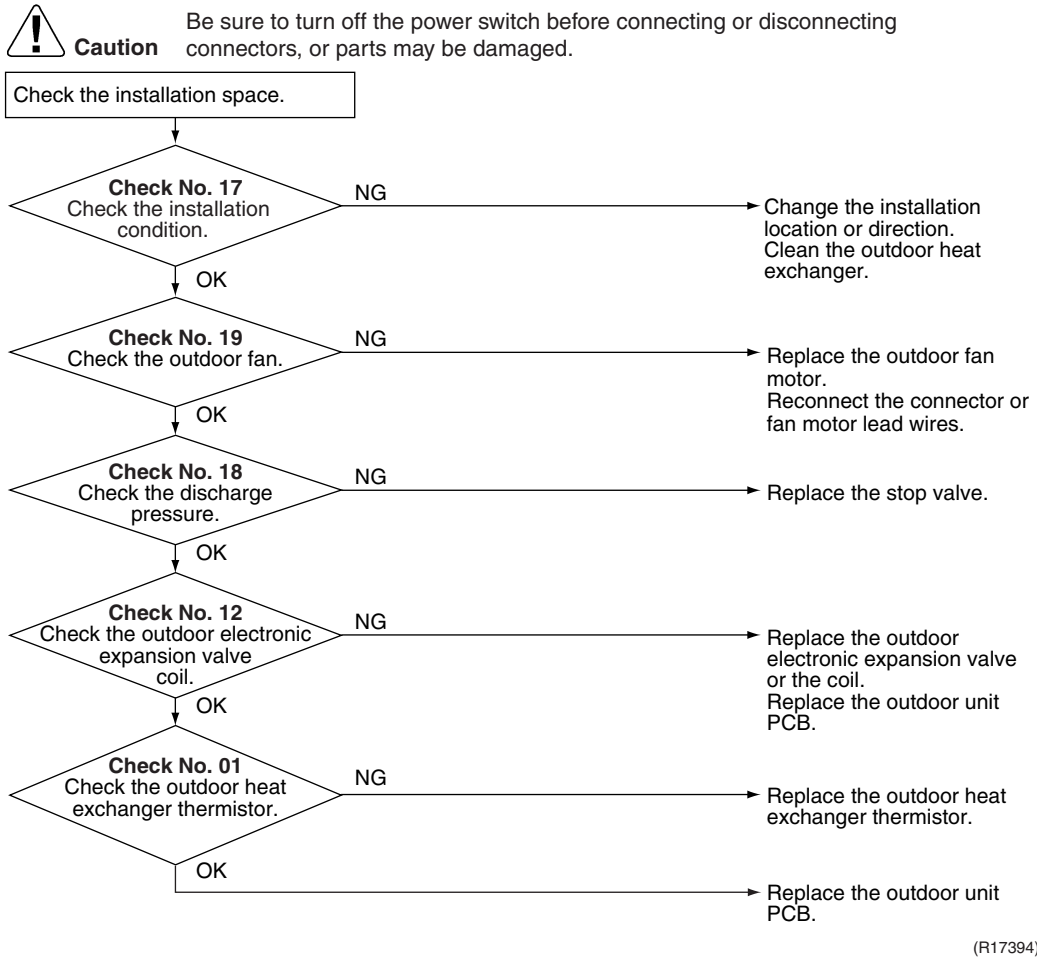

6.14 Compressor Sensor System Abnormality (24/32 Class Only)

Remote Controller Display	HD
Outdoor Unit LED Display	A ◑ 1 ☼ 2 ☼ 3 ● 4 ●
Method of Malfunction Detection	■ Fault condition is identified by the supply voltage and the DC voltage which is detected before the compressor startup. ■ Fault condition is identified by the compressor current which is detected right after the compressor startup. ■ If the error repeats, the system is shut down. ■ Reset condition: Continuous run for about 5 minutes without any other error
Malfunction Decision Conditions	■ The detected value of the supply voltage and the DC voltage is obviously low or high. ■ The compressor current does not run when the compressor is started.
Supposed Causes	■ Disconnection of reactor ■ Disconnection of compressor harness ■ Defective outdoor unit PCB ■ Defective compressor

Troubleshooting

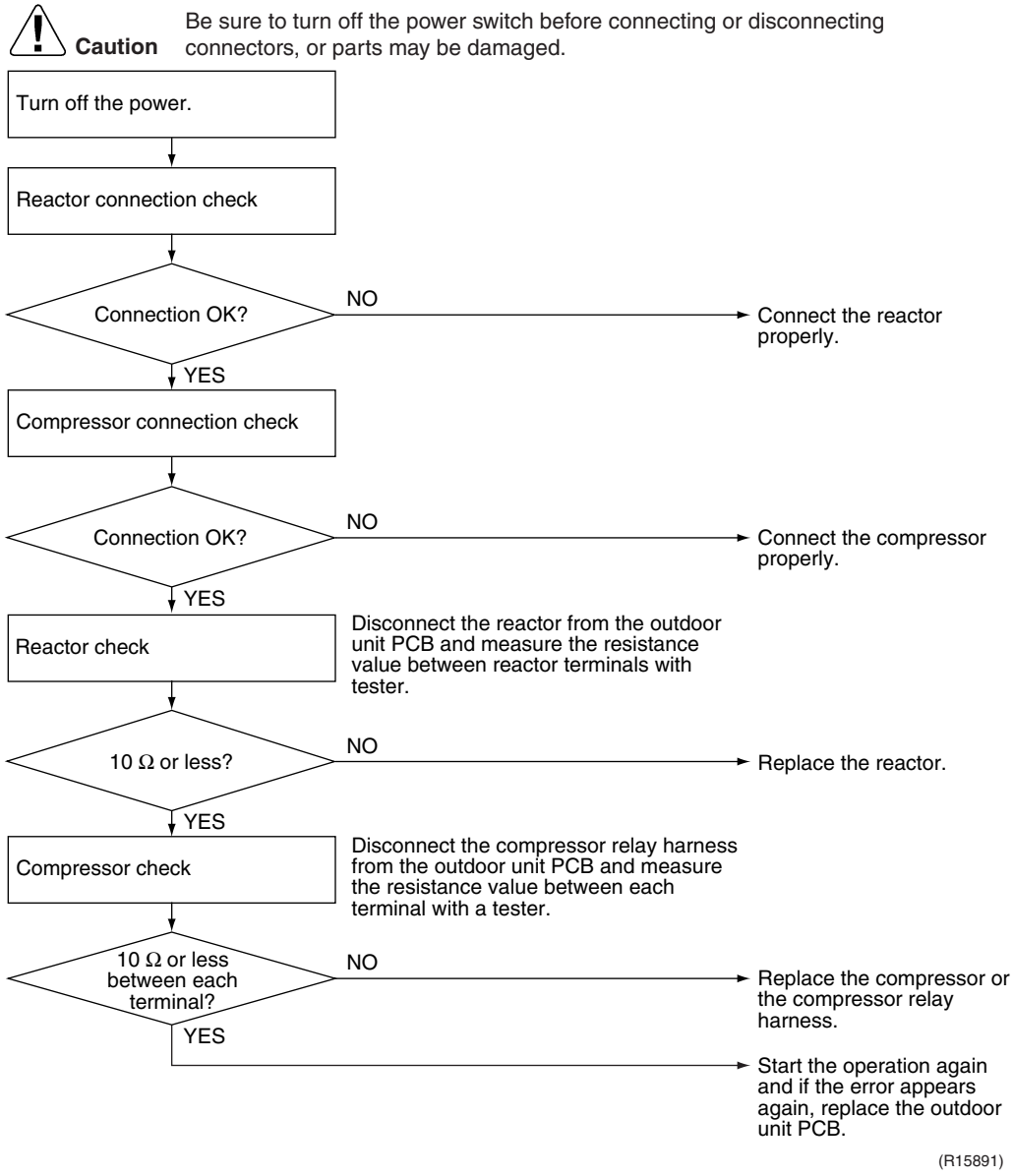

6.15 Position Sensor Abnormality

Remote Controller Display	H6
Outdoor Unit LED Display	A ◑ 1 ☼ 2 ☼ 3 ● 4 ●
Method of Malfunction Detection	A compressor start-up failure is detected by checking the compressor running condition through the position detection circuit.
Malfunction Decision Conditions	■ If the error repeats, the system is shut down. ■ Reset condition: Continuous run for about 5 minutes without any other error
Supposed Causes	■ Disconnection of the compressor relay cable ■ Defective compressor ■ Defective outdoor unit PCB ■ Start-up failure caused by the closed stop valve ■ Input voltage is outside the specified range.

Troubleshooting

18 class

Check No.15
Refer to P.196

Check No.18
Refer to P.198

Check No.20
Refer to P.199

Caution Be sure to turn off the power switch before connecting or disconnecting connectors, or parts may be damaged.

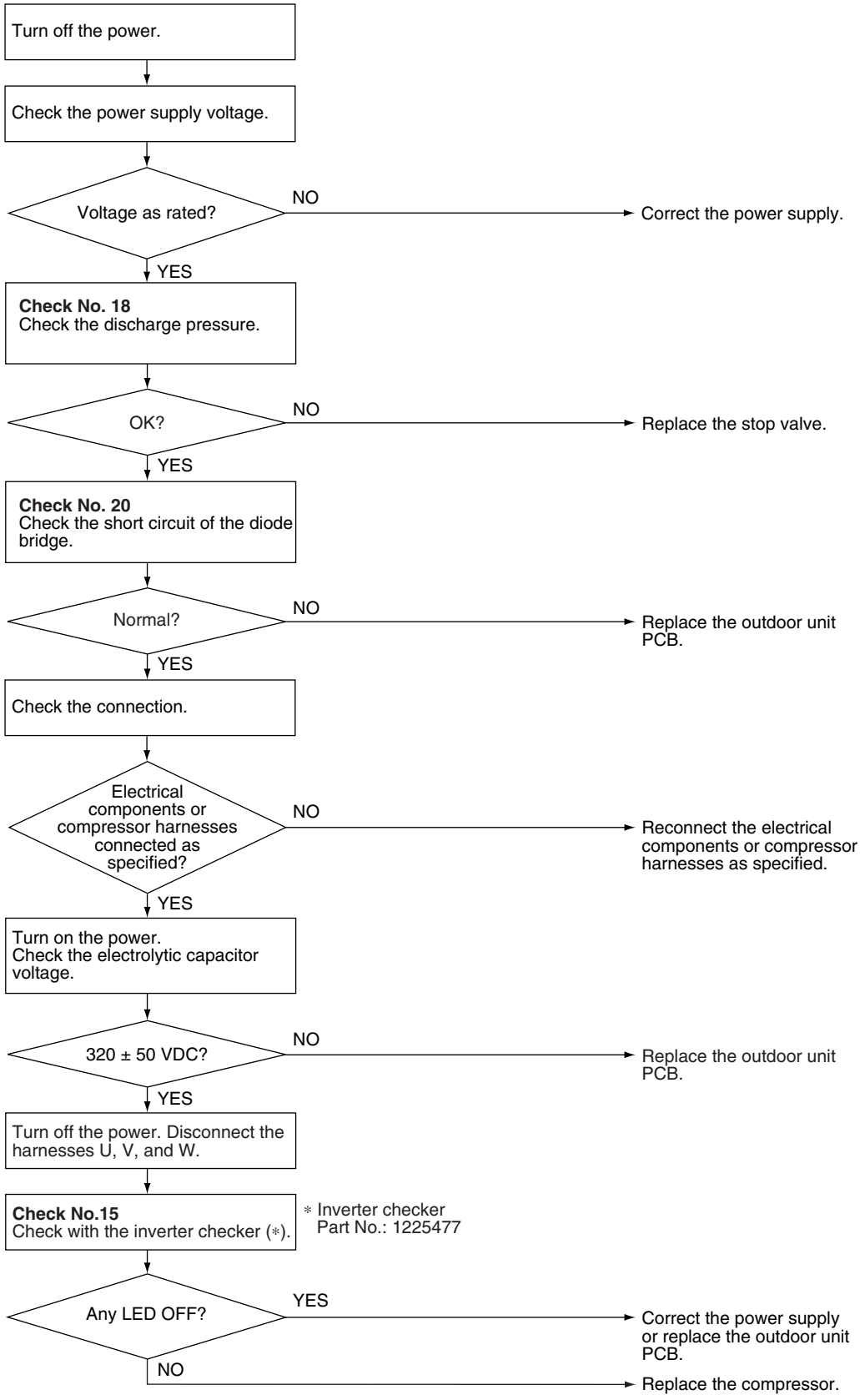

(R15300)

Troubleshooting

24/32 class

Check No.15
Refer to P.196

Check No.18
Refer to P.198

Caution Be sure to turn off the power switch before connecting or disconnecting connectors, or parts may be damaged.

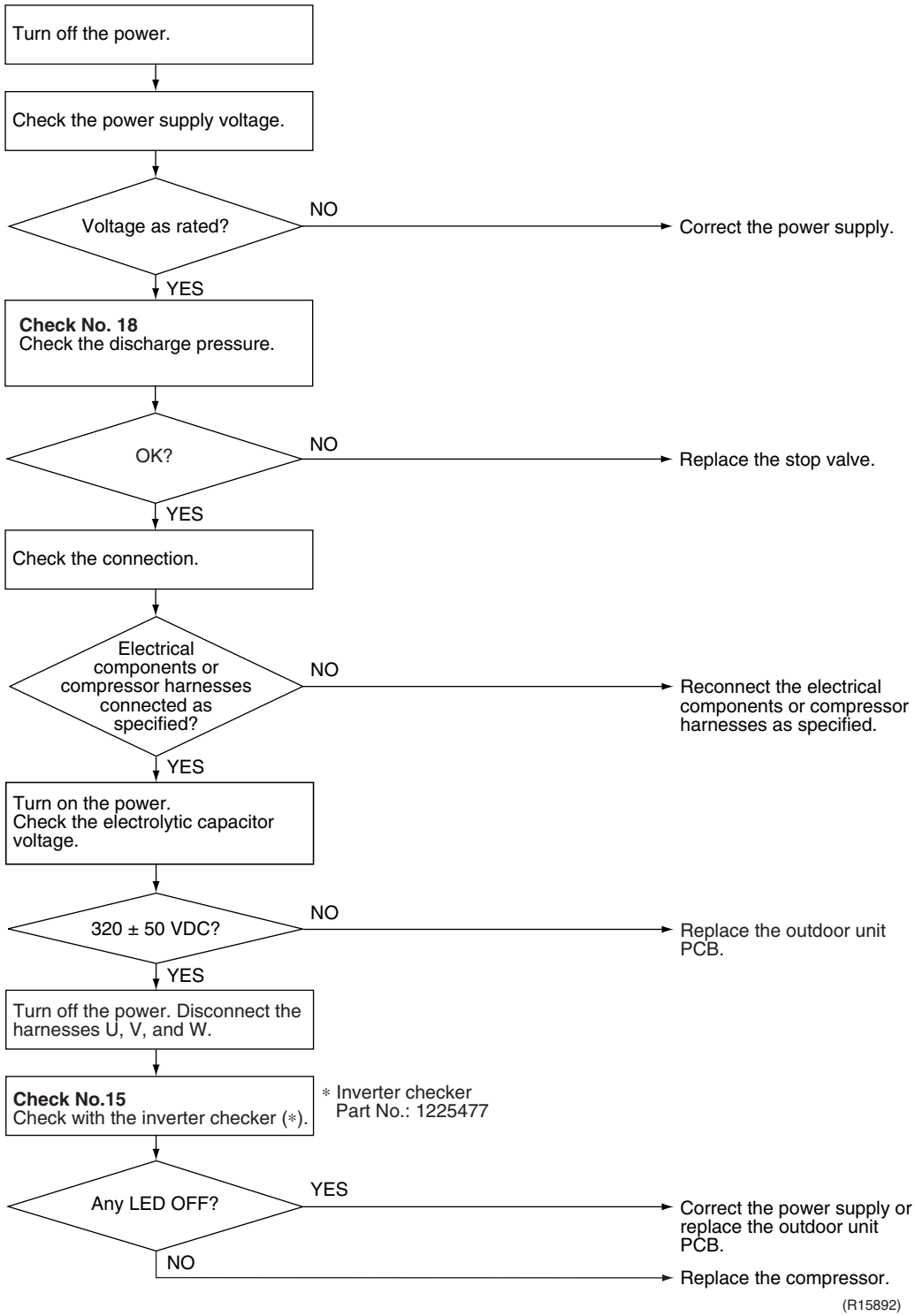

6.16 CT or Related Abnormality

Remote Controller Display

H8

Outdoor Unit LED Display

A ◑ 1 ☼ 2 ☼ 3 ● 4 ●

Method of Malfunction Detection

A CT or related error is detected by checking the compressor running frequency and CT-detected input current.

Malfunction Decision Conditions

- The compressor running frequency is more than **A** Hz and input current is less than **B** A.

	A (Hz)	**B** (A)
18 class	55	1.25
24/32 class	32	0.5

- If the error repeats, the system is shut down.
- Reset condition: Continuous run for about 60 minutes without any other error

Supposed Causes

- Defective power module
- Broken or disconnected wiring
- Defective reactor
- Defective outdoor unit PCB

Troubleshooting

Check No.15
Refer to P.196

Check No.21
Refer to P.200

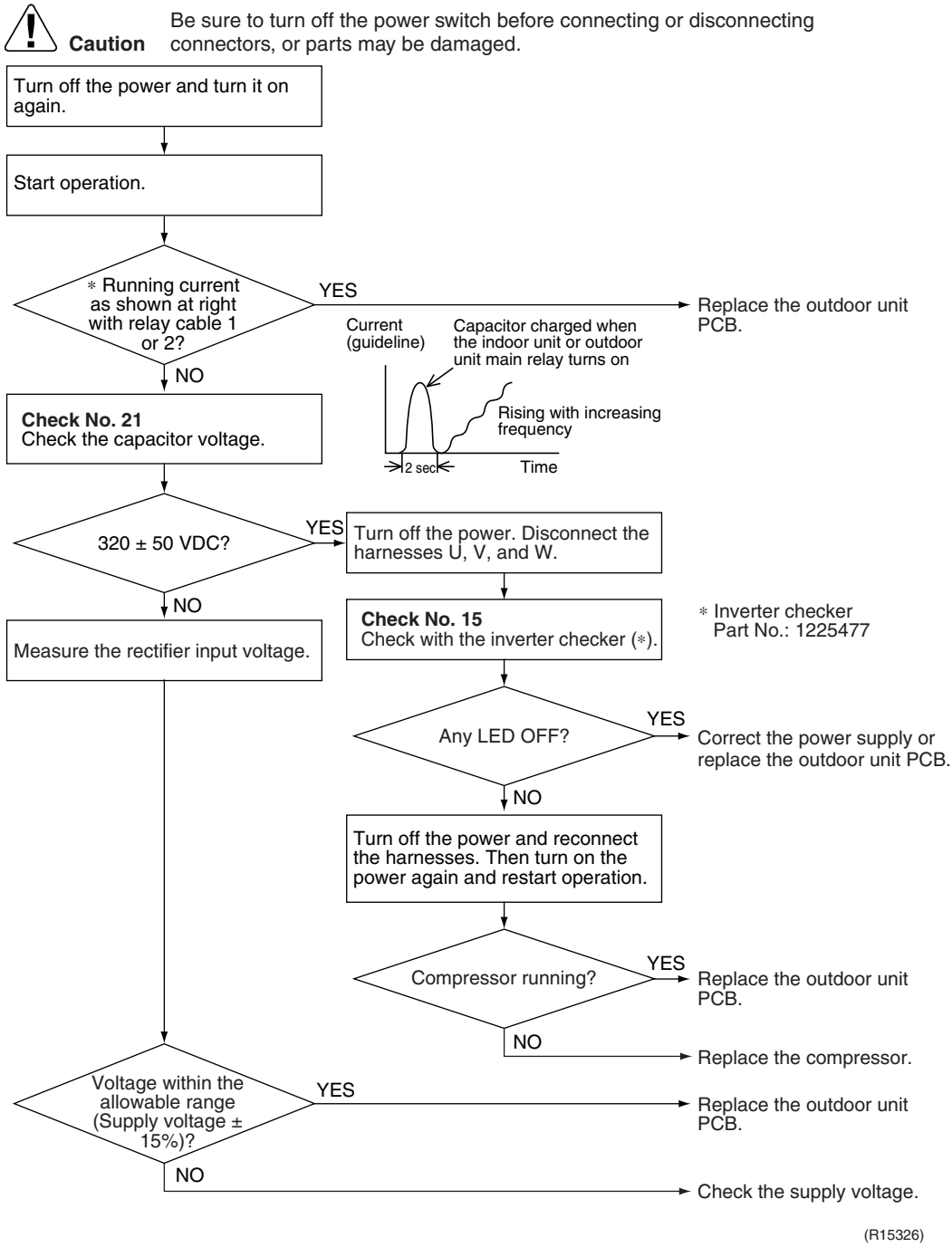

6.17 Thermistor or Related Abnormality (Outdoor Unit)

Remote Controller Display	H9, J3, J6, J8, J9, P4
Outdoor Unit LED Display	A ◑ 1 ☼ 2 ☼ 3 ● 4 ●
Method of Malfunction Detection	This type of error is detected by checking the thermistor input voltage to the microcomputer. A thermistor error is detected by checking the temperature sensed by each thermistor.
Malfunction Decision Conditions	■ The thermistor input is above 4.96 V or below 0.04 V with the power on. ■ J3 error is judged if the discharge pipe temperature is lower than the heat exchanger temperature. ■ The system is shut down if all the units are judged as the J8 error.
Supposed Causes	■ Disconnection of the connector for the thermistor ■ Defective thermistor corresponding to the error code ■ Defective heat exchanger thermistor in the case of J3 error (outdoor heat exchanger thermistor in cooling operation, or indoor heat exchanger thermistor in heating operation) ■ Defective outdoor unit PCB

Troubleshooting

Check No.01
Refer to P.191

Caution Be sure to turn off the power switch before connecting or disconnecting connectors, or parts may be damaged.

Turn on the power again.

Error displayed again on remote controller?
- NO → Reconnect the connectors or thermistors.
- YES ↓

Check No. 01
Check the thermistor resistance value.

Normal?
- NO → Replace the defective thermistor(s).
  - ∗ Outdoor temperature thermistor
  - ∗ Discharge pipe thermistor
  - ∗ Outdoor heat exchanger thermistor
  - ∗ Liquid pipe thermistor
  - ∗ Gas pipe thermistor
  - ∗ Radiation fin thermistor
- YES ↓

J3 error: The discharge pipe temperature is lower than the heat exchanger temperature.
Cooling: Outdoor heat exchanger thermistor
Heating: Indoor heat exchanger thermistor

Check No. 01
Check the indoor heat exchanger thermistor resistance value in heating operation.

Indoor heat exchanger thermistor functioning?
- NO → Replace the indoor heat exchanger thermistor.
- YES → Replace the outdoor unit PCB.

(R17366)

H9 : Outdoor temperature thermistor
J3 : Discharge pipe thermistor
J6 : Outdoor heat exchanger thermistor
J8 : Liquid pipe thermistor
J9 : Gas pipe thermistor
P4 : Radiation fin thermistor

Note: **In case of P4 for 24/32 class models**

Caution Be sure to turn off the power switch before connecting or disconnecting connectors, or parts may be damaged.

Replace the outdoor unit PCB.

Note: **For 3MXS24JVJU**

The short thermistors which locate near the connectors [S92] and [S93] each are indispensable for control. When you check the liquid pipe thermistors or the gas pipe thermistors, check the short thermistor also.

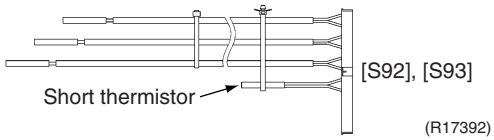

(R17392)

6.18 Electrical Box Temperature Rise

Remote Controller Display

L3

Outdoor Unit LED Display

A ◑ 1 ☼ 2 ☼ 3 ● 4 ☼

Method of Malfunction Detection

An electrical box temperature rise is detected by checking the radiation fin thermistor with the compressor off.

Malfunction Decision Conditions

- With the compressor off, the radiation fin temperature is above **A**.
- The error is cleared when the temperature drops below **B**.
- To cool the electrical components, the outdoor fan starts when the radiation fin temperature rises above **C** and stops when it drops below **B**.

	A	B	C
18 class	176°F (80°C)	158°F (70°C)	167°F (75°C)
24/32 class	212°F (100°C)	158°F (70°C)	185°F (85°C)

Supposed Causes

- Defective outdoor fan motor
- Short circuit
- Defective radiation fin thermistor
- Disconnection of connector
- Defective outdoor unit PCB

Troubleshooting

Check No.01
Refer to P.191

Check No.17
Refer to P.198

Check No.19
Refer to P.199

18 class

Caution Be sure to turn off the power switch before connecting or disconnecting connectors, or parts may be damaged.

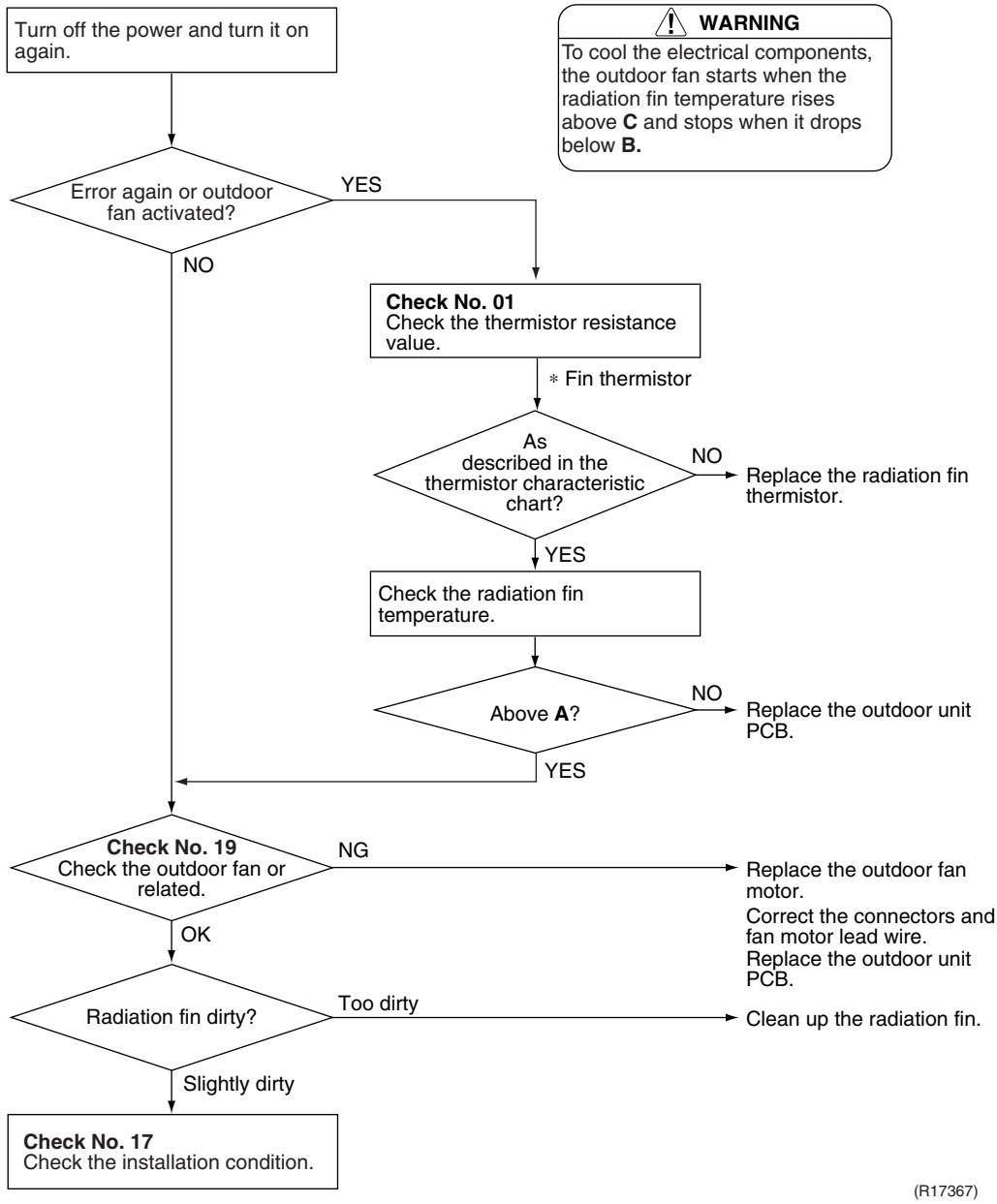

	A	B	C
18 class	176°F (80°C)	158°F (70°C)	167°F (75°C)

Troubleshooting

24/32 class

Check No.17
Refer to P.198

Check No.19
Refer to P.199

Caution Be sure to turn off the power switch before connecting or disconnecting connectors, or parts may be damaged.

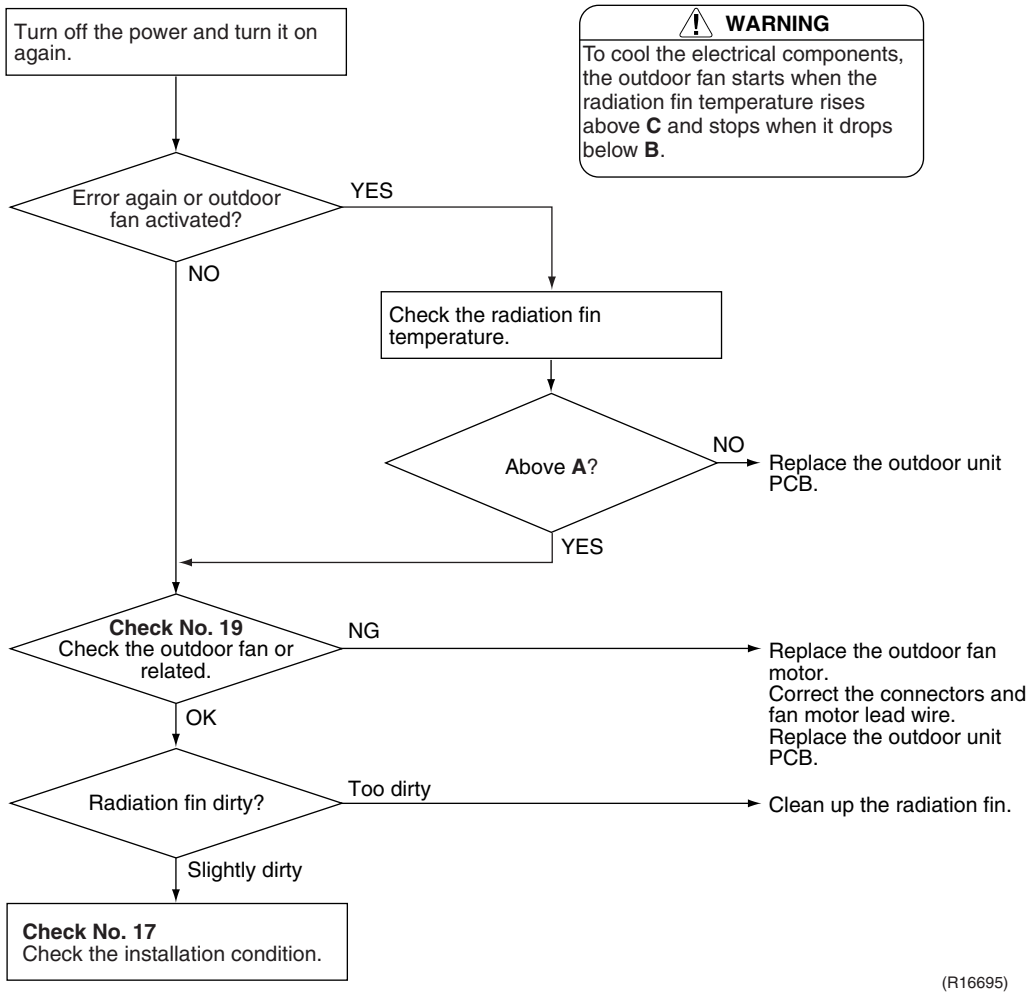

	A	B	C
24/32 class	212°F (100°C)	158°F (70°C)	185°F (85°C)

6.19 Radiation Fin Temperature Rise

Remote Controller Display

L4

Outdoor Unit LED Display

A ◑ 1 ● 2 ● 3 ● 4 ☼

Method of Malfunction Detection

A radiation fin temperature rise is detected by checking the radiation fin temperature with the compressor on.

Malfunction Decision Conditions

- The radiation fin temperature with the compressor on is above **A**.
- The error is cleared when the temperature drops below **B.**

	A	B
18 class	194°F (90°C)	185°F (85°C)
24/32 class	221°F (105°C)	206.6°F (97°C)

- If the error repeats, the system is shut down.
- Reset condition: Continuous run for about 60 minutes without any other error

Supposed Causes

- Defective outdoor fan motor
- Short circuit
- Defective radiation fin thermistor
- Disconnection of connector
- Defective outdoor unit PCB
- Silicon grease is not applied properly on the radiation fin after replacing the outdoor unit PCB.

Troubleshooting

18 class

Check No.01
Refer to P.191

Check No.17
Refer to P.198

Check No.19
Refer to P.199

Caution Be sure to turn off the power switch before connecting or disconnecting connectors, or parts may be damaged.
(Precaution before turning on the power again)
Make sure the power has been off for at least 30 seconds.

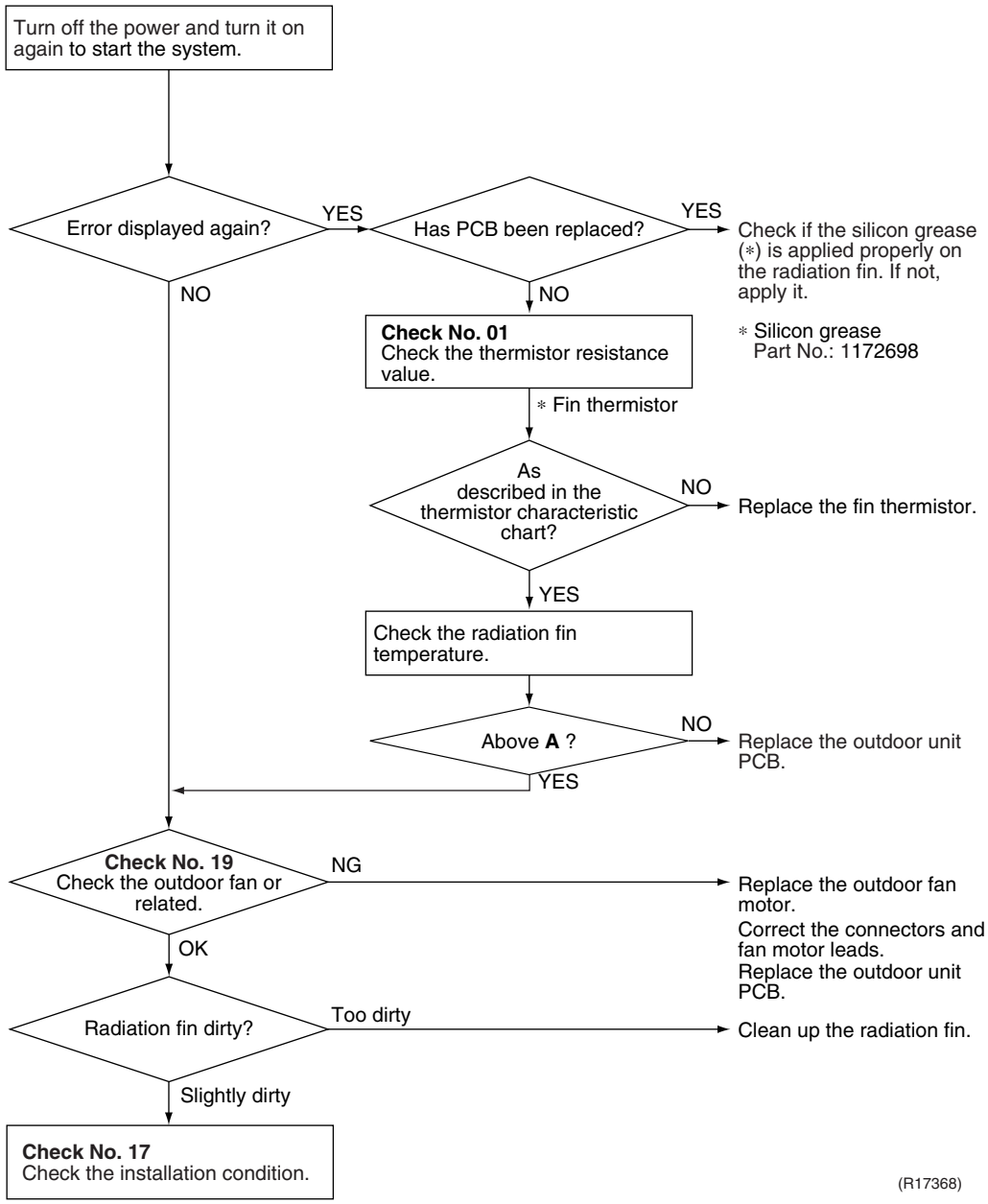

	A
18 class	194°F (90°C)

Note: Refer to “Application of silicon grease to a power transistor and a diode bridge” on page 267 for detail.

Troubleshooting

24/32 class

Check No.17
Refer to P.198

Check No.19
Refer to P.199

Caution Be sure to turn off the power switch before connecting or disconnecting connectors, or parts may be damaged.

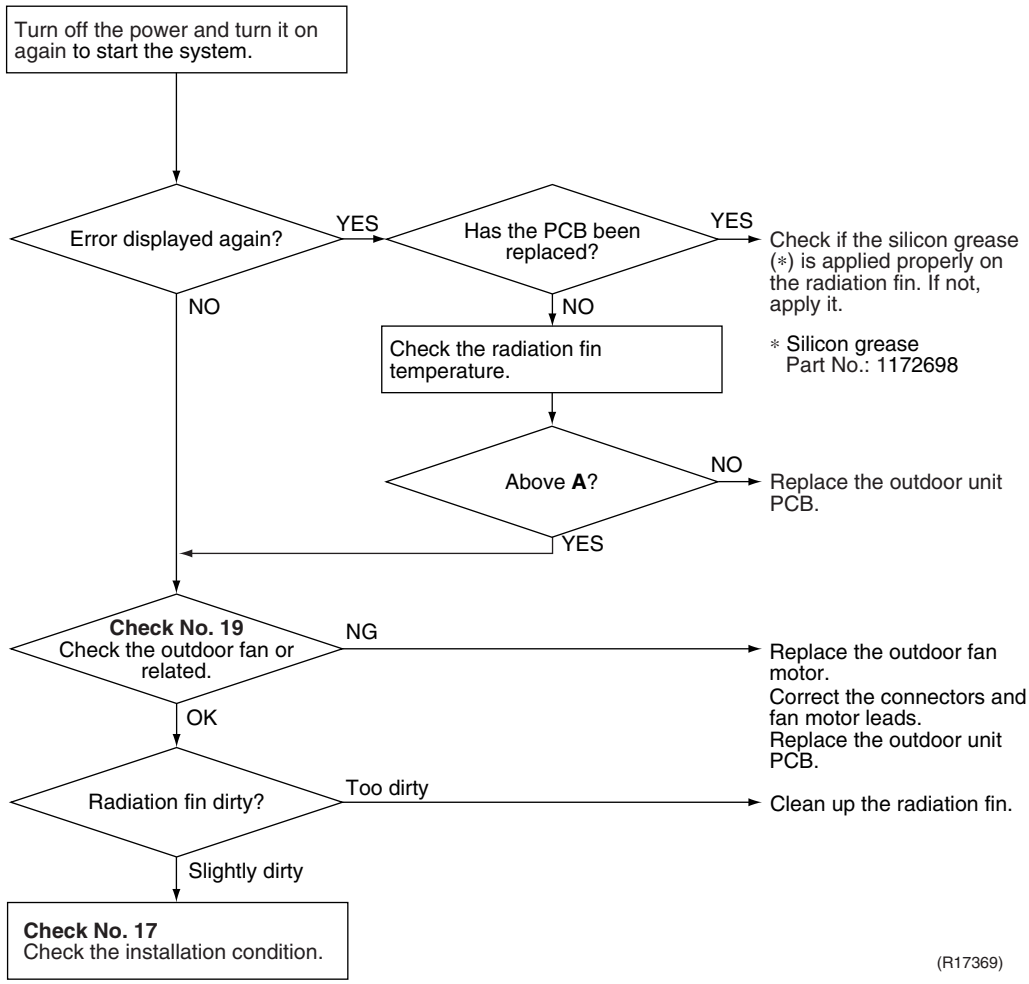

	A
24/32 class	221°F (105°C)

Note: Refer to “Application of silicon grease to a power transistor and a diode bridge” on page 267 for detail.

6.20 Output Overcurrent Detection

Remote Controller Display	L5
Outdoor Unit LED Display	A ◑ 1 ● 2 ● 3 ☼ 4 ●
Method of Malfunction Detection	An output overcurrent is detected by checking the current that flows in the inverter DC section.
Malfunction Decision Conditions	■ A position signal error occurs while the compressor is running. ■ A speed error occurs while the compressor is running. ■ An output overcurrent signal is fed from the output overcurrent detection circuit to the microcomputer. ■ If the error repeats, the system is shut down. ■ Reset condition: Continuous run for about 5 minutes without any other error
Supposed Causes	■ Poor installation condition ■ Closed stop valve ■ Defective power module ■ Wrong internal wiring ■ Abnormal power supply voltage ■ Defective outdoor unit PCB ■ Defective compressor

Troubleshooting

Check No.15
Refer to P.196

Check No.17
Refer to P.198

Check No.18
Refer to P.198

Check No.22
Refer to P.201

Caution Be sure to turn off the power switch before connecting or disconnecting connectors, or parts may be damaged.

∗ An output overcurrent may result from wrong internal wiring. If the system is interrupted by an output overcurrent after the wires have been disconnected and reconnected for part replacement, check the wiring again.

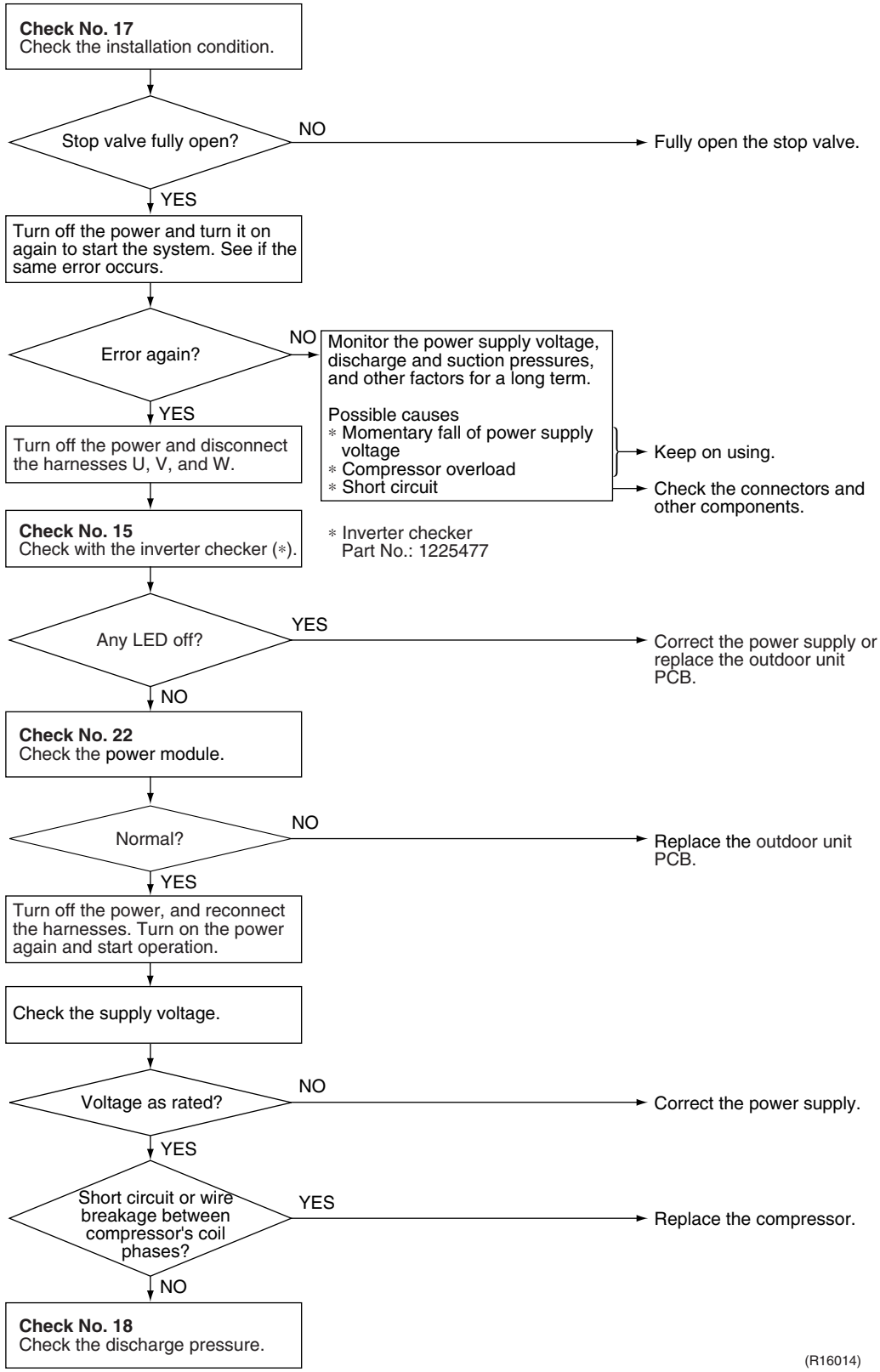

7. Check

7.1 Thermistor Resistance Check

Check No.01

Disconnect the connectors of the thermistors from the PCB, and measure the resistance of each thermistor using tester.
The relationship between normal temperature and resistance is shown in the table and the graph below.

The data is for reference purpose only.

Temperature (°F/°C)	Resistance (kΩ)
–4 / –20	197.8
5 / –15	148.2
14 / –10	112.1
23 / –5	85.60
32 / 0	65.93
41 / 5	51.14
50 / 10	39.99
59 / 15	31.52
68 / 20	25.02
77 / 25	20.00
86 / 30	16.10
95 / 35	13.04
104 / 40	10.62
113 / 45	8.707
122 / 50	7.176

(R 77°F (25°C) = 20 kΩ, B = 3950 K)

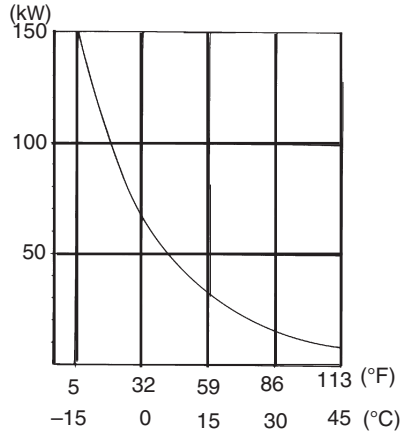

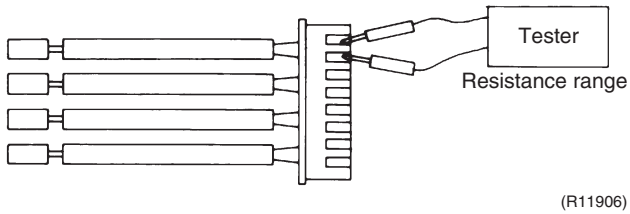

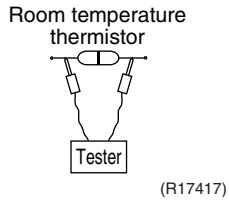

- The room temperature thermistor is directly mounted on the display PCB. Remove the display PCB from the control PCB to measure the resistance.
- When the indoor heat exchanger thermistor is soldered on the PCB, remove the thermistor and measure the resistance.

7.2 Fan Motor Connector Check

Check No.02

CTXS/FTXS Series

1. Check the connection of connector.
2. Check motor power supply voltage output (pins 4 - 7).
3. Check motor control voltage (pins 4 - 3).
4. Check rotation command voltage output (pins 4 - 2).
5. Check rotation pulse input (pins 4 - 1).

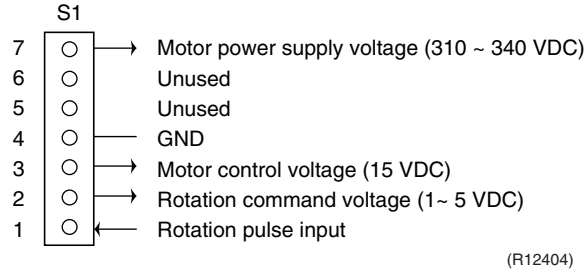

7.3 Hall IC Check

Check No.04

CDXS/FDXS Series

1. Check the connector connection.
2. With the power on, operation off, and the connector connected, check the following.
   ∗Output voltage of about 5 V between pins 1 and 3.
   ∗Generation of 3 pulses between pins 2 and 3 when the fan motor is operating.

If NG in step 1 → Defective PCB → Replace the PCB.
If NG in step 2 → Defective Hall IC → Replace the fan motor.
If OK in both steps 1 and 2 → Replace the PCB.

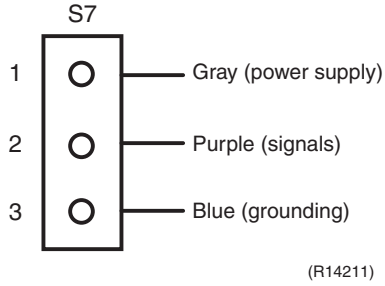

7.4 Power Supply Waveform Check

Check No.11

Measure the power supply waveform between No. 1 and No. 2 on the terminal board, and check the waveform disturbance.

- Check to see if the power supply waveform is a sine wave (Fig.1).
- Check to see if there is waveform disturbance near the zero cross (sections circled in Fig.2)

[Fig.1]

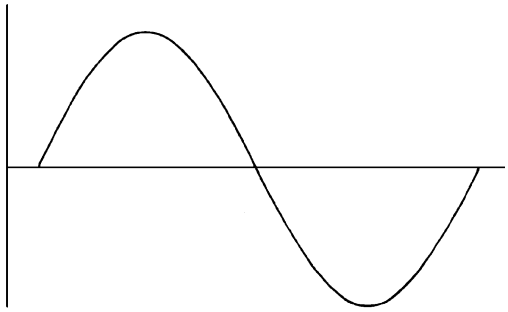

(R1736)

[Fig.2]

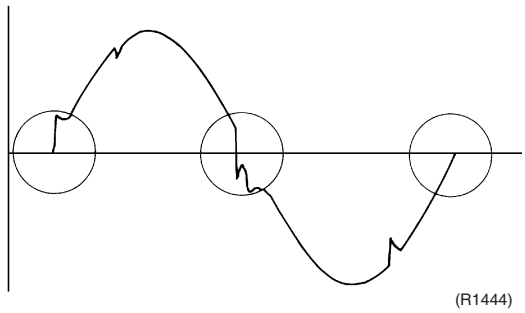

(R1444)

7.5 Outdoor Electronic Expansion Valve Check

Check No.12

Conduct the followings to check the outdoor electronic expansion valve (EV).

1. Check to see if the EV connector is correctly inserted in the PCB. Match the EV unit number and the connector number.
2. Turn the power off and on again, and check to see if all the EVs generate latching sound.
3. If any of the EVs does not generate latching sound in the above step 2, disconnect that connector and check the continuity using a tester.
   Check the continuity between the pins 1 - 6 and 3 - 6, and between the pins 2 - 5 and 4 - 5. If there is no continuity between the pins, the EV coil is faulty.
4. If no EV generates latching sound in the above step 2, the outdoor unit PCB is faulty.
5. If the continuity is confirmed in the above step 3, mount a good coil (which generated latching sound) in the EV unit that did not generate latching sound, and check to see if that EV generates latching sound.
   ∗If latching sound is generated, the outdoor unit PCB is faulty.
   ∗If latching sound is not generated, the EV unit is faulty.

Note: Please note that the latching sound varies depending on the valve type.

If the system keeps operating with a defective outdoor electronic expansion valve, the following problem may occur.

Valve opening position	Possible problem	Check method
Open	Cooling: ■ Flowing noise of refrigerant in the unit which is not in operation ■ Water leakage at the unit which is not in operation ■ Operation half due to anti-icing function	Reset power supply and conduct cooling operation unit by unit. 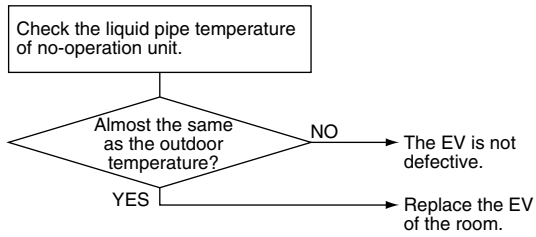 (R16019)
	Heating: ■ Flowing noise of refrigerant in the unit which is not in operation ■ The unit does not heat the room.	
Close	Cooling: ■ The problem unit does not cool the room. ■ Only the problem unit is in operation, the unit starts pump down. (The low pressure of the unit becomes vacuum.) ■ Abnormal discharge pipe temperature	Reset power supply and conduct cooling operation unit by unit. 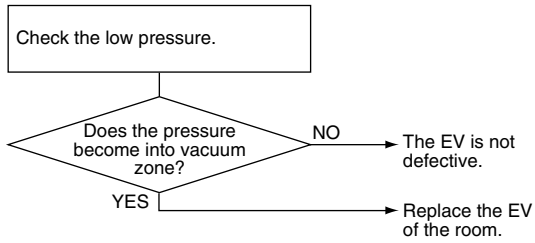 (R16020)
	Heating: ■ Refrigerant shortage due to stagnation of liquid refrigerant inside the faulty indoor unit ■ The unit does not heat the room. ■ Abnormal discharge pipe temperature	

7.6 Four Way Valve Performance Check

Check No.13

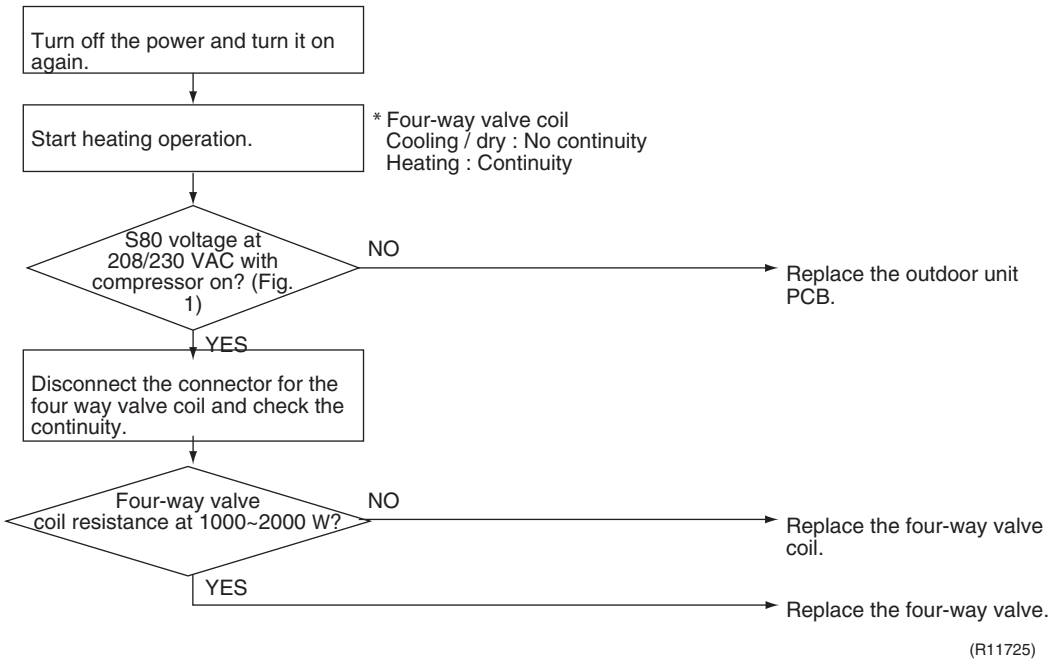

(Fig. 1)

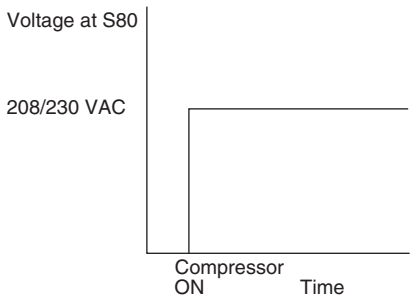

(R11717)

7.7 Inverter Unit Refrigerant System Check

Check No.14

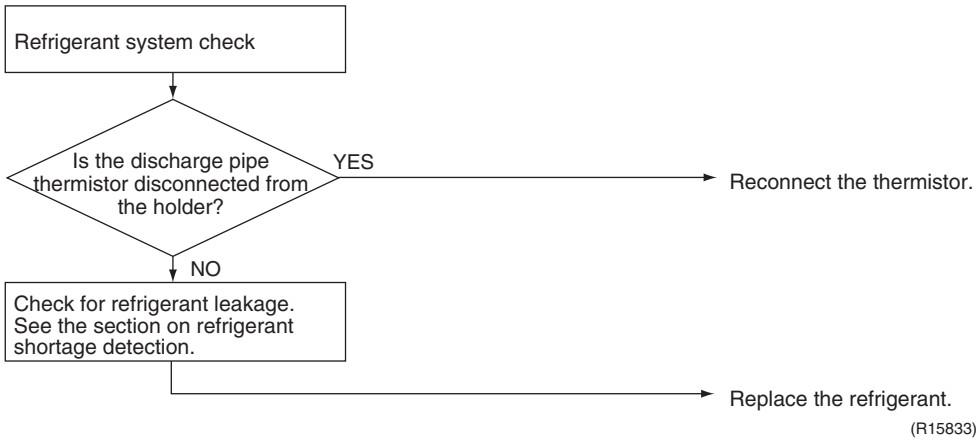

7.8 “Inverter Checker” Check

Check No.15

■ **Characteristics**

If abnormal stop occurs due to compressor startup failure or overcurrent output when using an inverter unit, it is difficult to judge whether the stop is caused by the compressor failure or some other failure (control PCB, power module, etc.). The inverter checker makes it possible to judge the cause of trouble easily and securely. (Connect this checker as a quasi-compressor instead of the compressor and check the output of the inverter.)

■ **Operation Method**

Step 1

Be sure to turn the power off.

Step 2

Install the inverter checker instead of a compressor.

Note:
Make sure the charged voltage of the built-in smoothing electrolytic capacitor drops to 10 VDC or below before carrying out the service work.

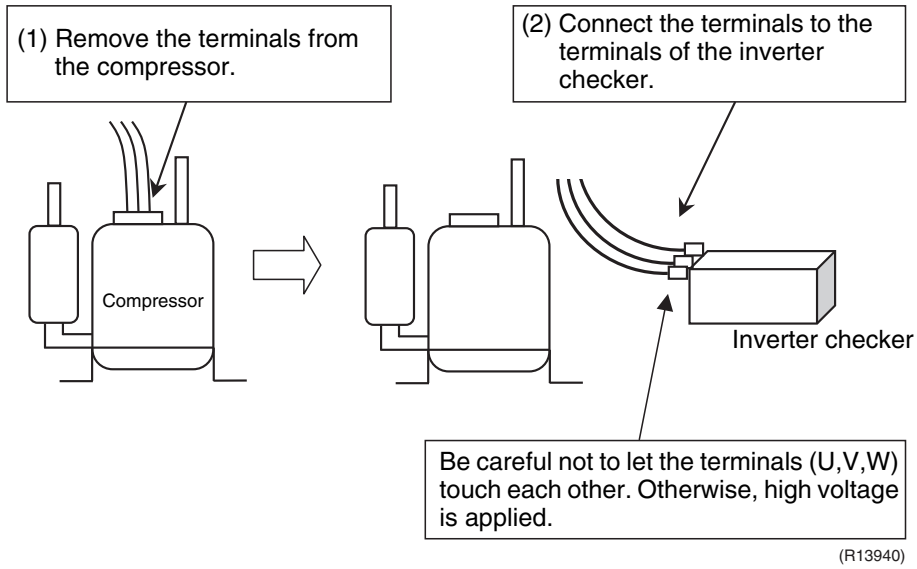

Reference:
If the terminals of the compressor are not FASTON terminals (difficult to remove the wire on the terminals), it is possible to connect wires available on site to the outdoor unit from output side of PCB. (Do not connect them to the compressor at the same time, otherwise it may result in incorrect detection.)

Step 3

Activate the power transistor test operation from the outdoor unit.

1) Press the forced operation [ON/OFF] switch for 5 seconds.
   (Refer to page 256 for the position.)
   → Power transistor test operation starts.

■ **Diagnose method (Diagnose according to 6 LEDs lighting status.)**

(1) If all the LEDs are lit uniformly, the compressor is defective.
→ Replace the compressor.

(2) If the LEDs are not lit uniformly, check the power module.
→ Refer to **Check No.22**.

(3) If NG in **Check No.22**, replace the power module.
18 class: Replace the power module (SPM).
24/32 class: Replace the main PCB. The power module (PM1) is united with the main PCB.

(4) If any solder cracking is found, replace the PCB or repair the soldered section.
If there is no solder cracking, replace the PCB.

Caution

(1) When the output frequency is low, the LEDs blink slowly. As the output frequency increases, the LEDs blink quicker. (The LEDs look like they are lit.)

(2) On completion of the inverter checker diagnosis, be sure to re-crimp the FASTON terminals. Otherwise, the terminals may be burned due to loosening.

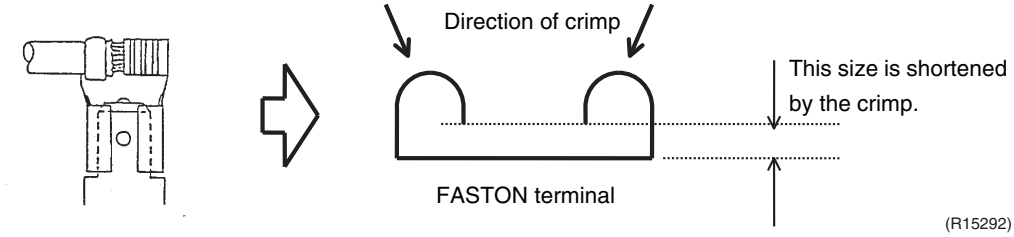

7.9 Rotation Pulse Check on the Outdoor Unit PCB

Check No.16

<Outdoor fan motor>

Make sure that the voltage of 320 ± 30 V is applied.

1. Set operation off and power off. Disconnect the connector S70.
2. Check that the voltage between the pins 4 - 7 is 320 VDC.
3. Check that the control voltage between the pins 3 - 4 is 15 VDC.
4. Check that the rotation command voltage between the pins 2 - 4 is 0 ~ 15 VDC.
5. Keep operation off and power off. Connect the connector S70.
6. Check whether 2 pulses (0 ~ 15 VDC) are output at the pins 1 - 4 when the fan motor is rotated 1 turn by hand.

When the fuse is melted, check the outdoor fan motor for proper function.

If NG in step 2 → Defective PCB → Replace the PCB.
If NG in step 4 → Defective Hall IC → Replace the outdoor fan motor.
If OK in both steps 2 and 4 → Replace the PCB.

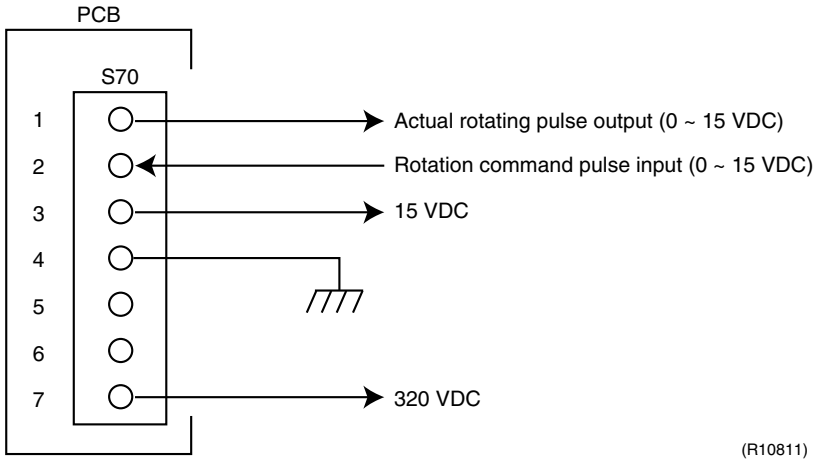

7.10 Installation Condition Check

Check No.17

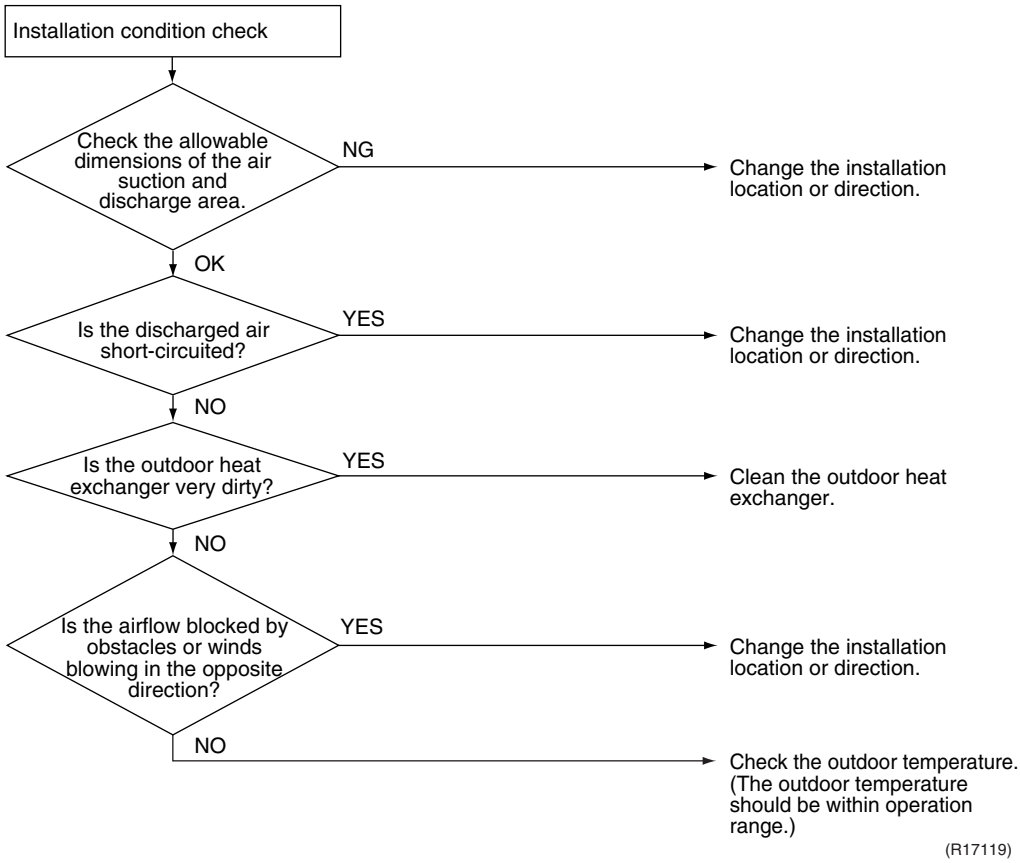

7.11 Discharge Pressure Check

Check No.18

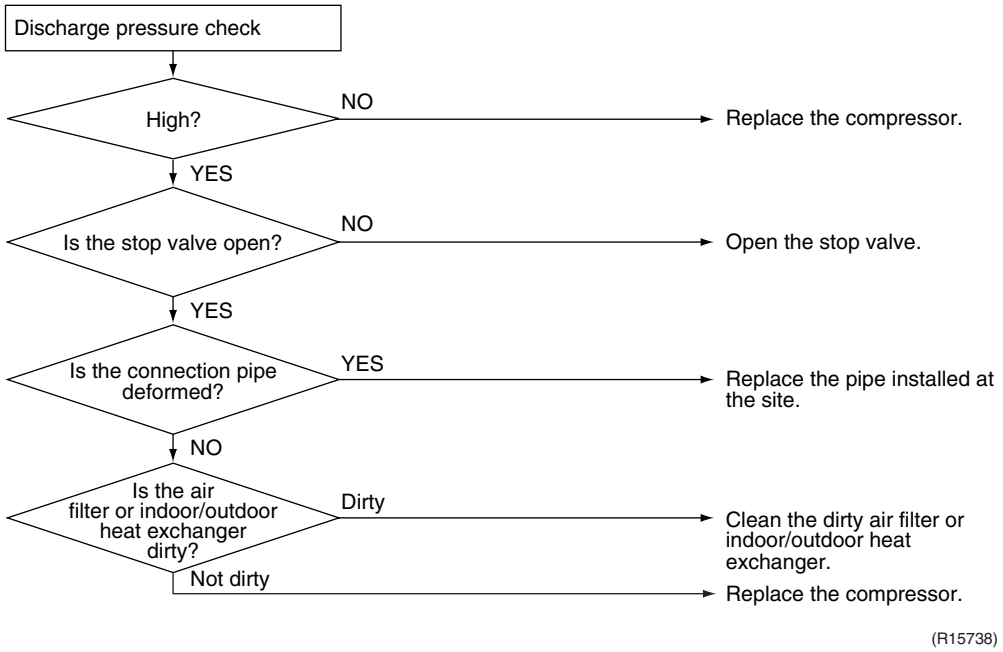

7.12 Outdoor Fan System Check

Check No.19

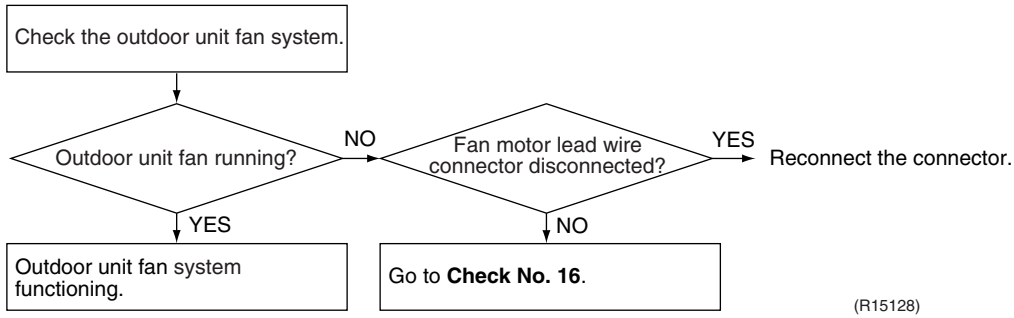

7.13 Main Circuit Short Check

Check No.20

Note: Check to make sure that the voltage between (+) and (–) of the diode bridge (DB1) is approx. 0 V before checking.

- Measure the resistance between the pins of the DB1 referring to the table below.
- If the resistance is ∞ or less than 1 kΩ, short circuit occurs on the main circuit.

(–) terminal of the tester (in case of digital, (+) terminal)	(~)	(+)	(~)	(–)
(+) terminal of the tester (in case of digital, (–) terminal)	(+)	(~)	(–)	(~)
Resistance is OK.	several kΩ ~several MΩ	∞	∞	several kΩ ~several MΩ
Resistance is NG.	0 or ∞	0	0	0 or ∞

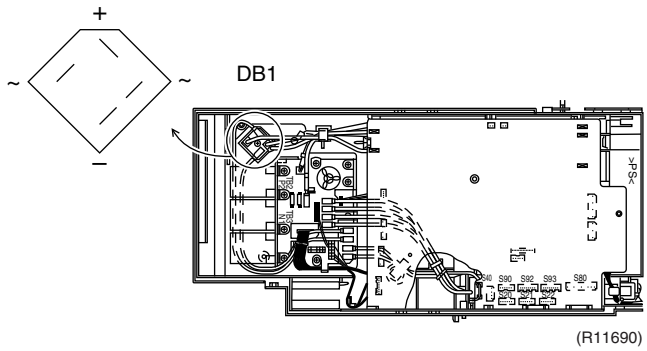

7.14 Capacitor Voltage Check

Check No.21

Before this check, be sure to check the main circuit for short circuit.
With the circuit breaker still on, measure the voltage according to the drawing of the model in question. Be careful never to touch any live parts.

18 class

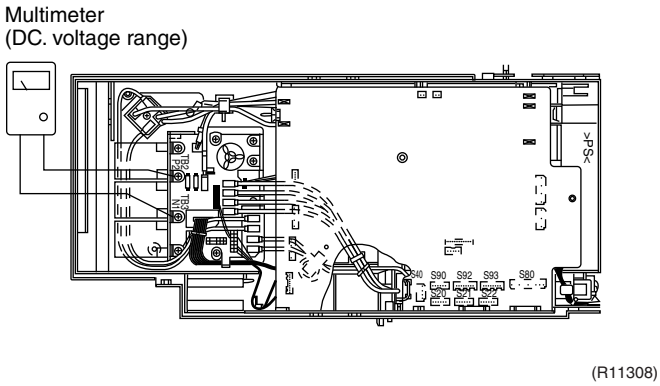

(R11308)

24/32 class

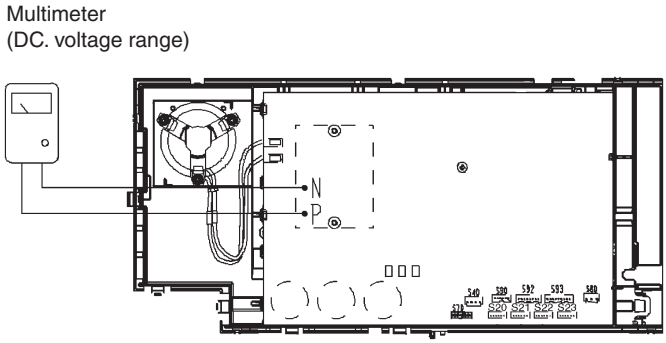

(R12869)

7.15 Power Module Check

Check No.22

Note: Check to make sure that the voltage between (+) and (–) of the power module (PM1) is approx. 0 V before checking.

- Disconnect the compressor harness connector from the outdoor unit PCB. To disengage the connector, press the protrusion on the connector.
- Follow the procedure below to measure resistance between the terminals of the power module and the terminals of the compressor with a multi-tester. Evaluate the measurement results referring to the following table.

Negative (–) terminal of tester (positive terminal (+) for digital tester)	Power module (+)	UVW	Power module (–)	UVW
Positive (+) terminal of tester (negative terminal (–) for digital tester)	UVW	Power module (+)	UVW	Power module (–)
Resistance is OK.	several kΩ ~ several MΩ			
Resistance is NG.	0 Ω or ∞			

18 class

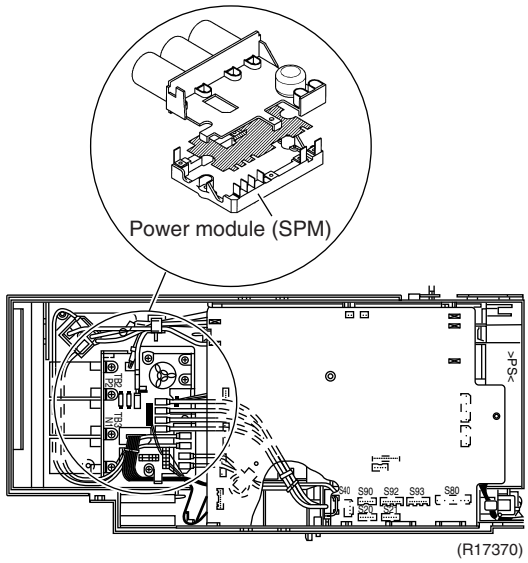

24/32 class

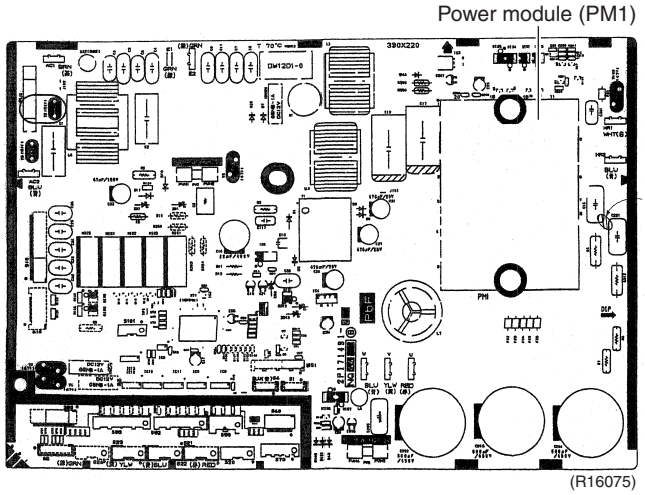

Part 7
Removal Procedure

1. Outdoor Unit: 2MXS18GVJU 203
   1.1 Removal of Outer Panels 203
   1.2 Removal of Electrical Box 204
   1.3 Removal of PCBs 209
   1.4 Removal of Fan Motor 212
   1.5 Removal of Sound Blankets 213
   1.6 Removal of Coils / Thermistors 215
   1.7 Removal of Four Way Valve / Defrost Solenoid Valve 217
   1.8 Removal of Distributor 219
   1.9 Removal of Compressor 220
2. Outdoor Unit: 3MXS24JVJU, 4MXS32GVJU 222
   2.1 Removal of Outer Panels 222
   2.2 Removal of Electrical Box 234
   2.3 Removal of PCBs 240
   2.4 Removal of Fan Motor 244
   2.5 Removal of Coils / Thermistors 245
   2.6 Removal of Sound Blankets 250
   2.7 Removal of Compressor 253

1. Outdoor Unit: 2MXS18GVJU

1.1 Removal of Outer Panels

Procedure

Warning **Be sure to wait for 10 minutes or more after turning off all power supplies before disassembling work.**

Step	Procedure		Points
1	Appearance features	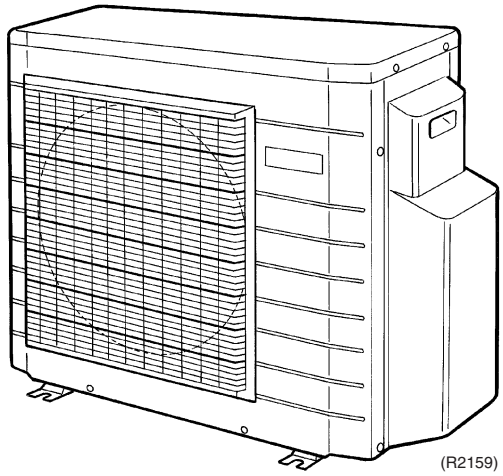 (R2159)	
2	Remove the 4 screws of the top panel and the 6 screws of the front panel.	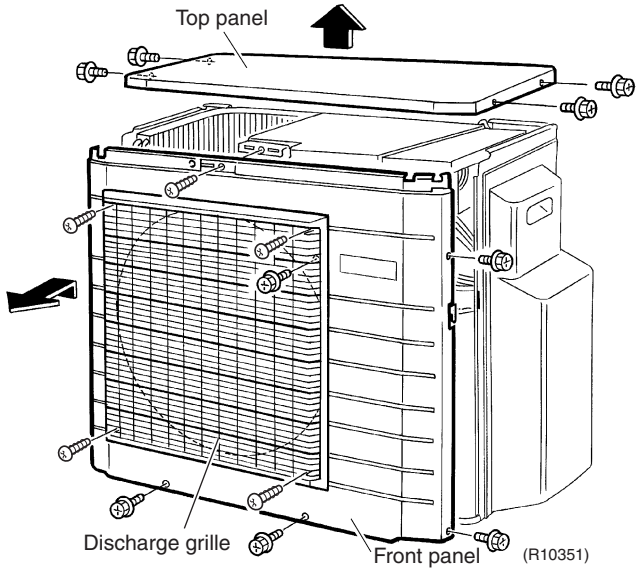 (R10351)	
3	Remove the 4 screws of the discharge grille.		
4	Remove the 2 screws of the stop valve cover.	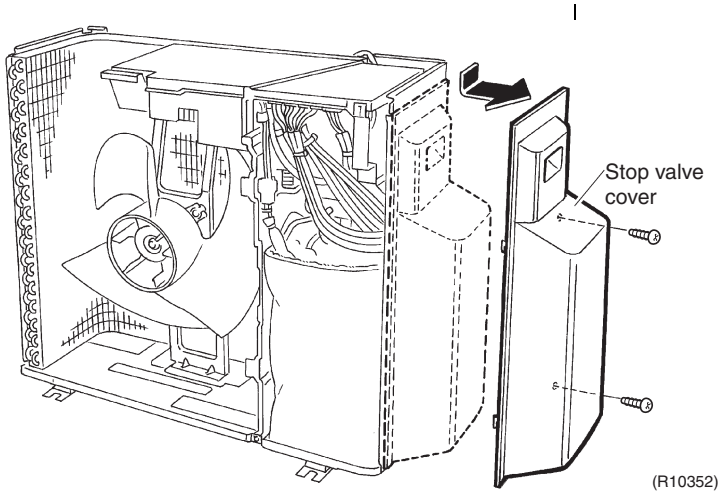 (R10352)	

1.2 Removal of Electrical Box

Procedure

Warning **Be sure to wait for 10 minutes or more after turning off all power supplies before disassembling work.**

Step	Procedure		Points
1. Disconnect the connecting wires.		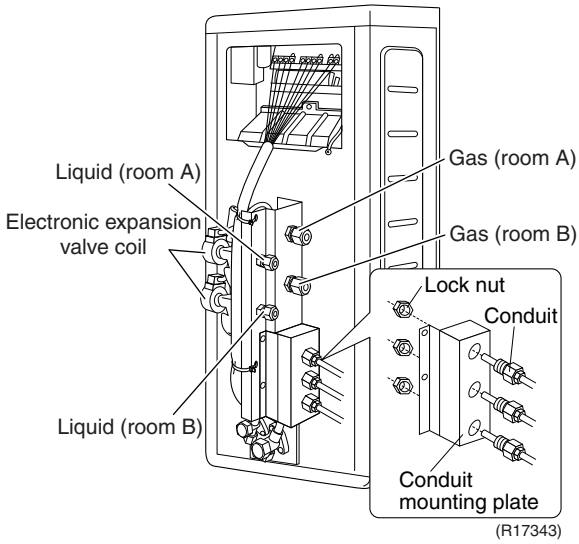	■ The US model has a protection plate on the right side panel. Remove the 2 screws to remove the protection plate. 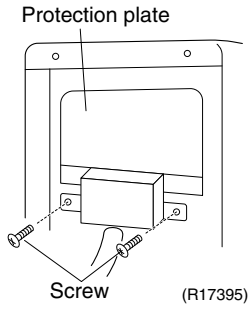
1	Remove the terminal board fixing screw.	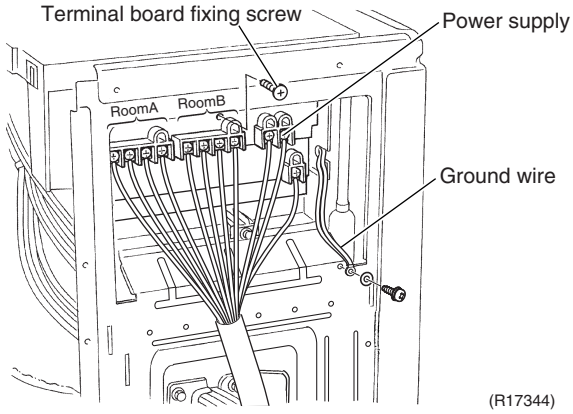	■ The wires are fixed to the terminal board with screws.
2	Remove all the screws of the connecting wires and the power supply wires.		
3	Remove the screw of the ground wire.		
2. Disconnect the harnesses.			[S20]: White [S21]: Red
1	Disconnect the 2 connectors for the electronic expansion valve coil [S20] [S21].	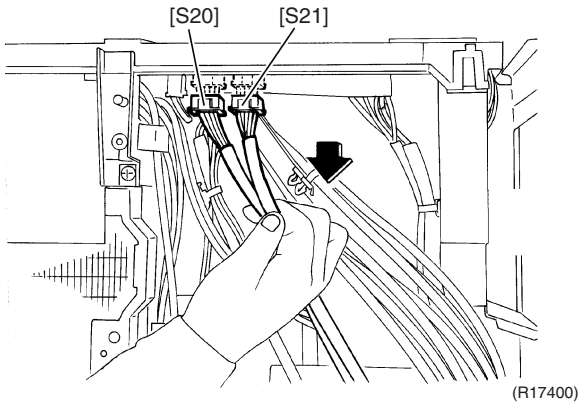	■ Bundle the harnesses of the electronic expansion valve coil with clamp. ■ Pull out the clamp. ■ When reassembling, insert the clamp into one of the holes. 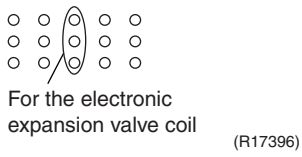

Step	Procedure		Points
2	Disconnect the connector for the four-way valve coil [S80].	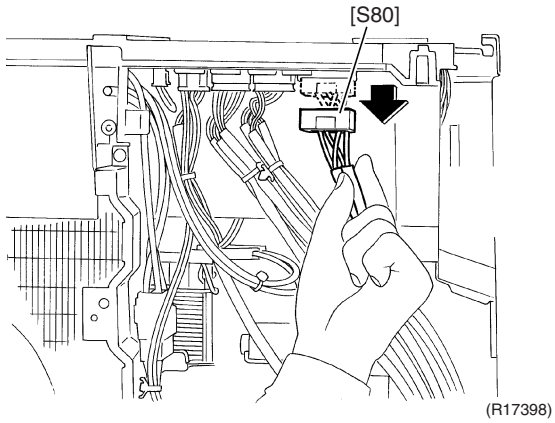	■ When reassembling, insert the clamp into the hole as below. 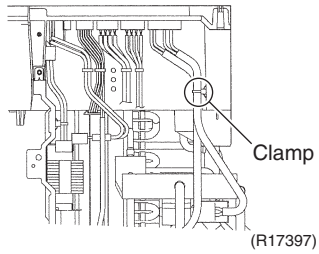
3	Disconnect the connectors for the thermistors [S90] [S92] [S93] and the overload protector [S40].	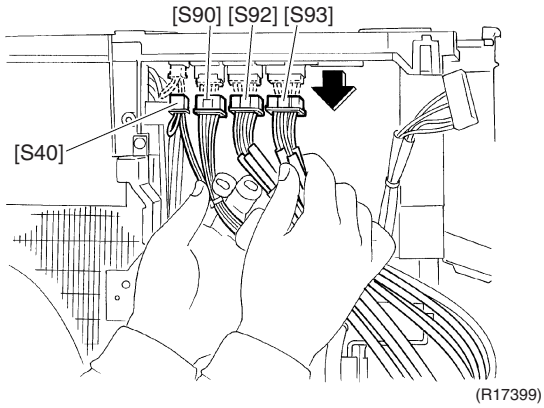	[S40]: overload protector [S90]: thermistors (outdoor temperature, outdoor heat exchanger, discharge pipe) [S92]: gas pipe thermistors [S93]: liquid pipe thermistors ■ Pull out the clamp. ■ When reassembling, insert each clamp of the themistors into one of the holes as below. 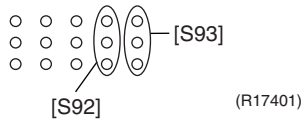 ■ When reassembling, insert each clamp into the holes. ■ When reassembling, the thermistor harness should be placed between the electrical box and the reactor harness as below. 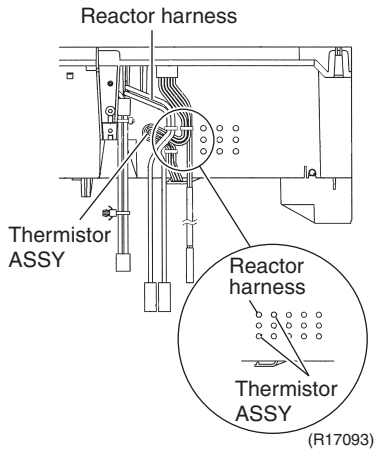

Step	Procedure		Points
4	Disconnect the relay connector of the compressor.	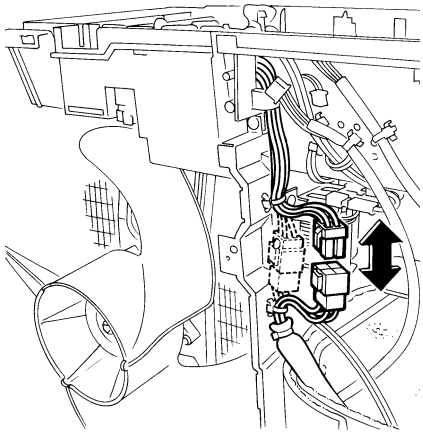 (R17065)	
5	Release the clamp with pliers.	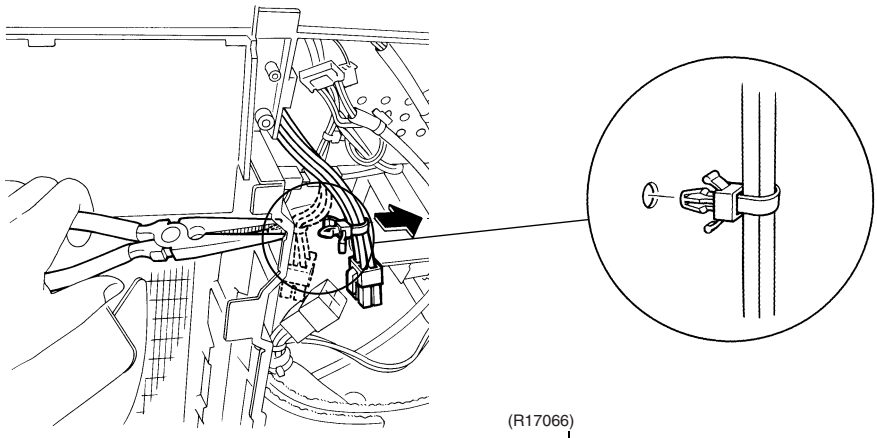 (R17066)	
6	Disconnect the reactor lead wires.	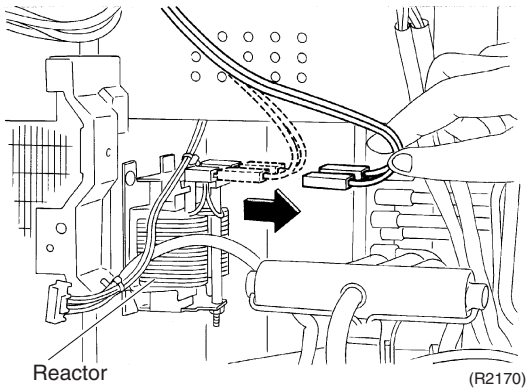 (R2170)	

Step	Procedure	Points
3. Remove the electrical box.		
1	Remove the screw of the shield plate. 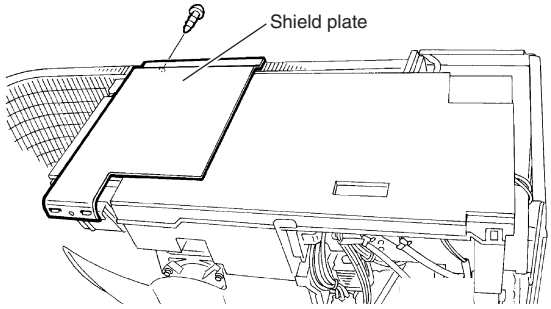 (R17345)	
2	Unfasten the 2 hooks and remove the shield plate. 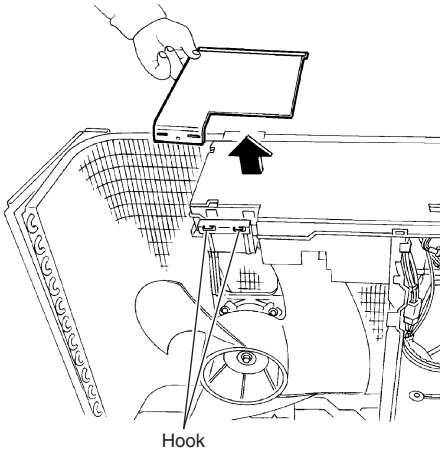 (R17346)	
3	Remove the screw on the right side of the electrical box. 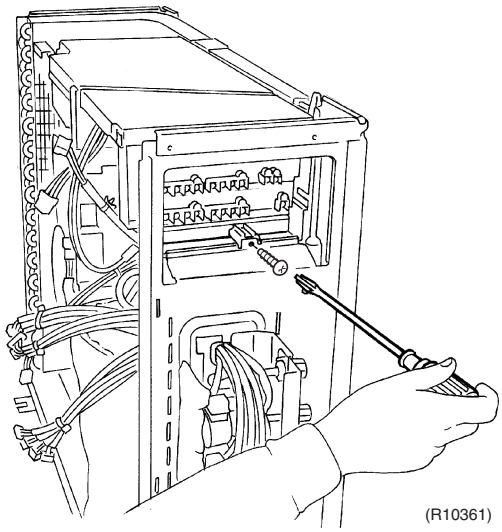 (R10361)	
4	Remove the screw on the front side of the electrical box. 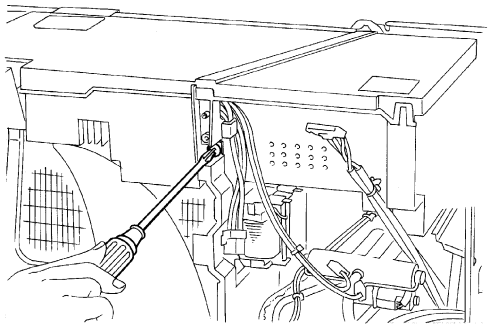 (R17402)	

Step	Procedure		Points
5	Remove the drip proof cover.	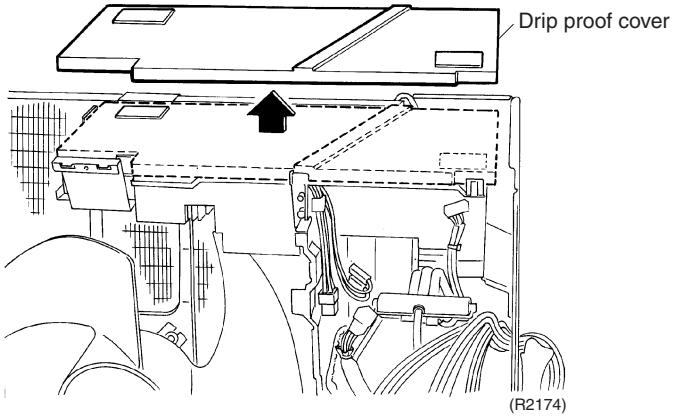	
6	Disconnect the connector for the fan motor [S70] from the inverter PCB (MID2). Release the fan motor lead wire from the hooks.	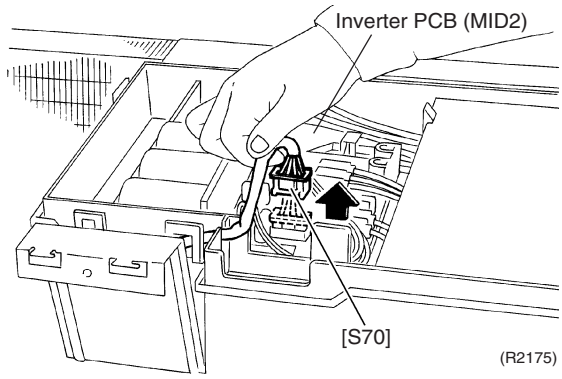	
7	Remove the electrical box.	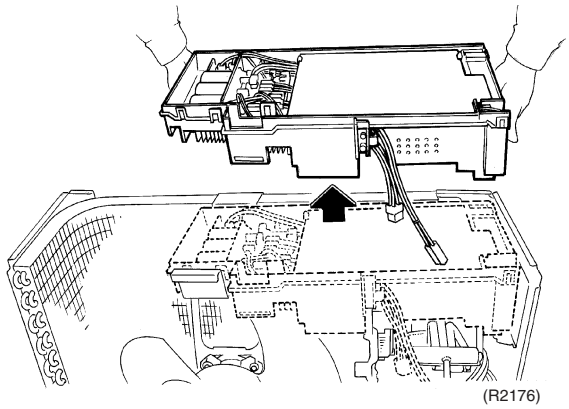	

1.3 Removal of PCBs

Procedure

Warning **Be sure to wait for 10 minutes or more after turning off all power supplies before disassembling work.**

Step	Procedure		Points
1	Remove the screw of the main PCB, and unfasten the 2 hooks.	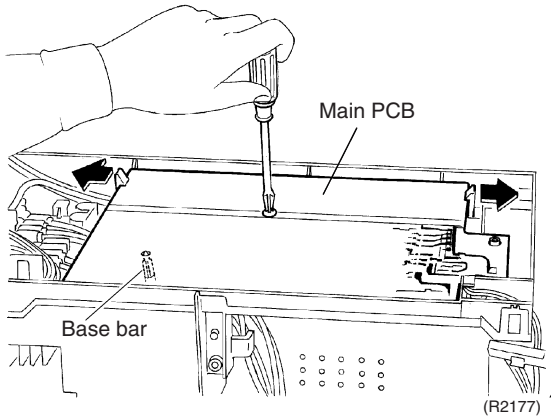	■ When reassembling, insert the base bar into the hole of the main PCB.
2	Unfasten the hook of the terminal board, and open the terminal board.	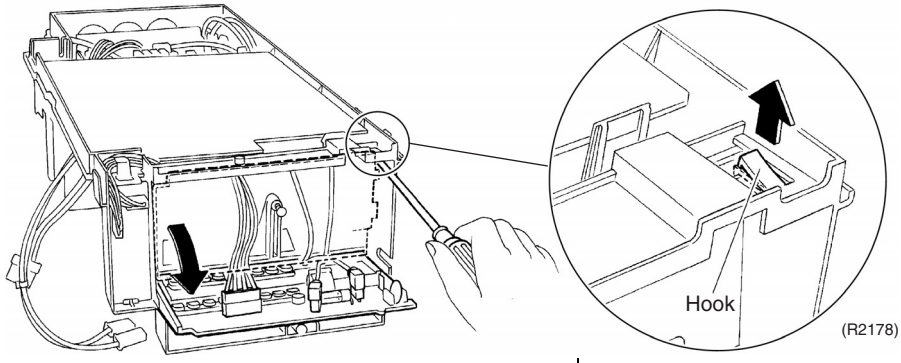	
3	Disconnect each connector [S11] [HE] [HL] [HN] on the back of the terminal board.	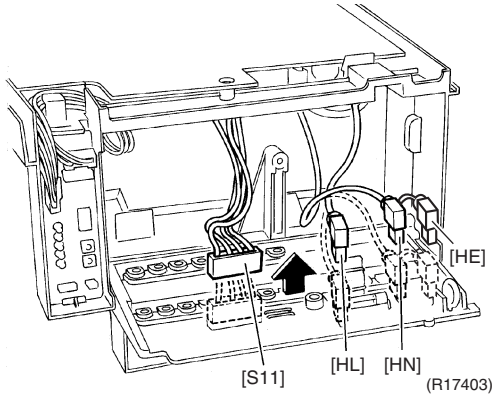	
4	Disconnect the connectors [S52] [S102] from the service monitor PCB.	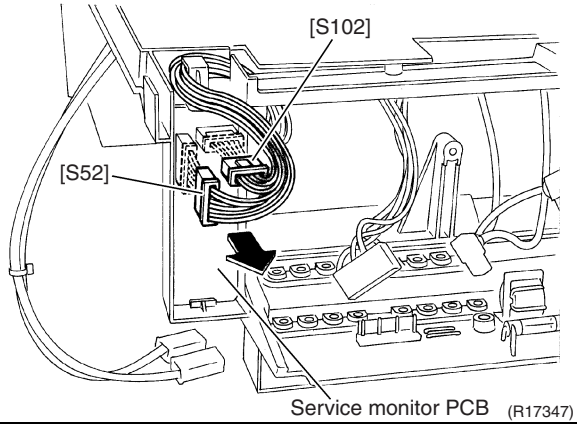	

Step	Procedure		Points
5	Lift up the main PCB.	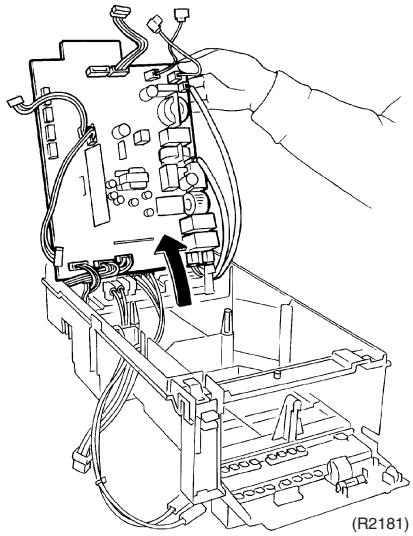 (R2181)	
6	Disconnect the connectors [S31] [S32] [S33] [S71] [H1] [H2].	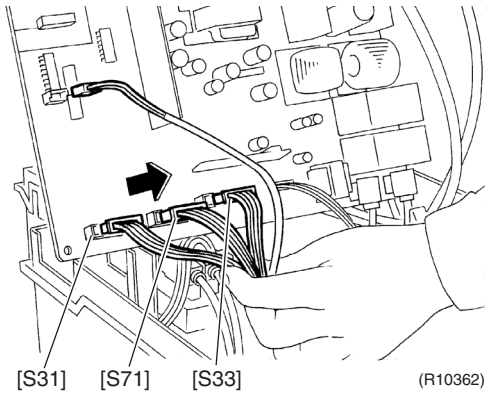 (R10362) 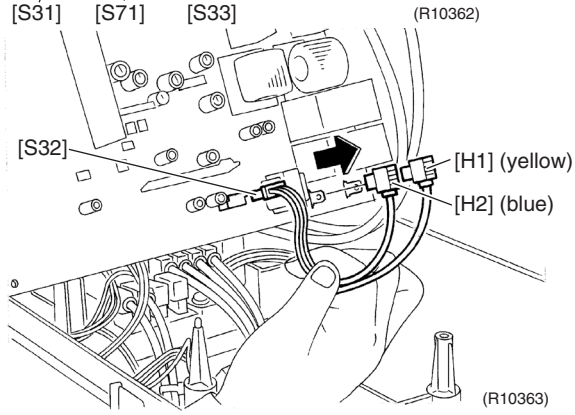 (R10363)	
7	The figure shows the main PCB.	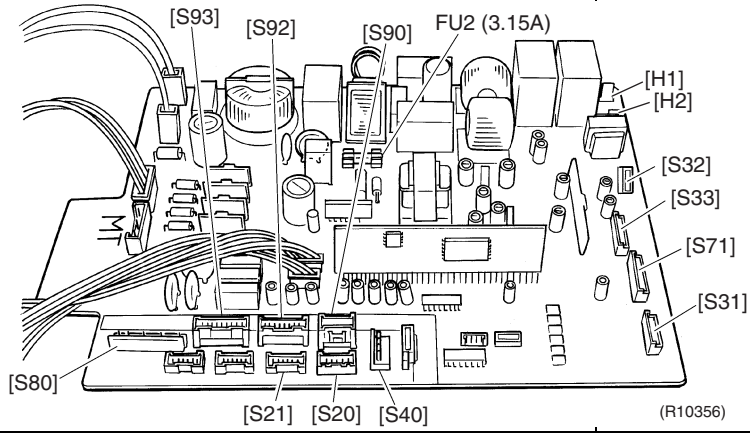 (R10356)	■ Refer to page 30 for detail.

Step	Procedure		Points
8	Unfasten the 2 hooks and remove the service monitor PCB.	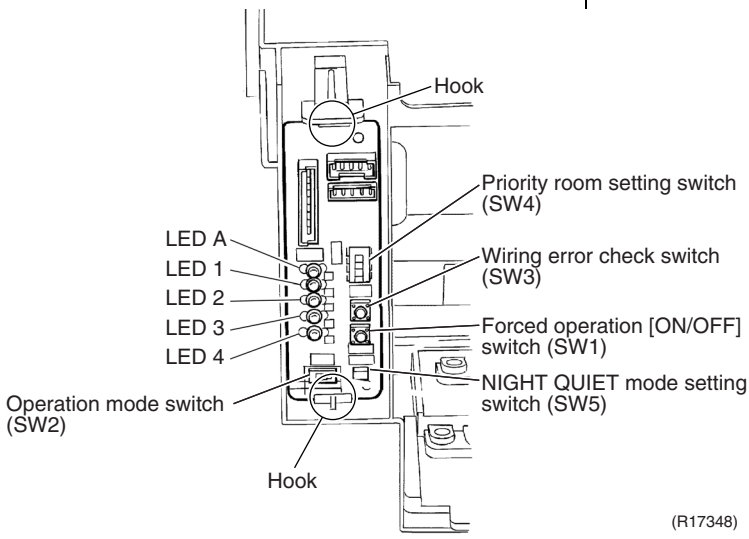	
9	Remove the 7 screws and remove the inverter PCB (MID2).	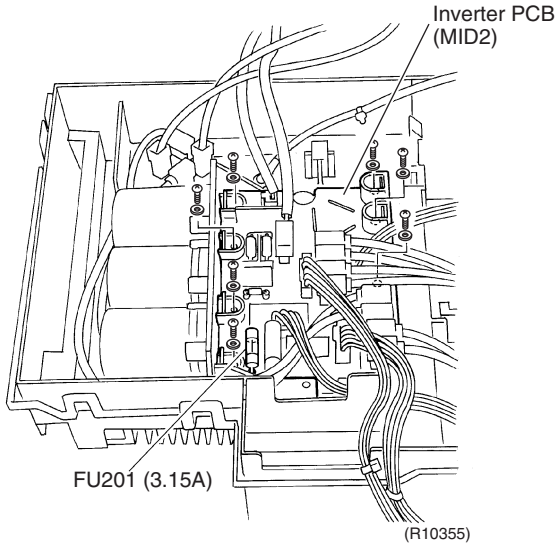	

1.4 Removal of Fan Motor

Procedure

Warning **Be sure to wait for 10 minutes or more after turning off all power supplies before disassembling work.**

Step	Procedure		Points
1	Remove the nut and remove the outdoor fan.	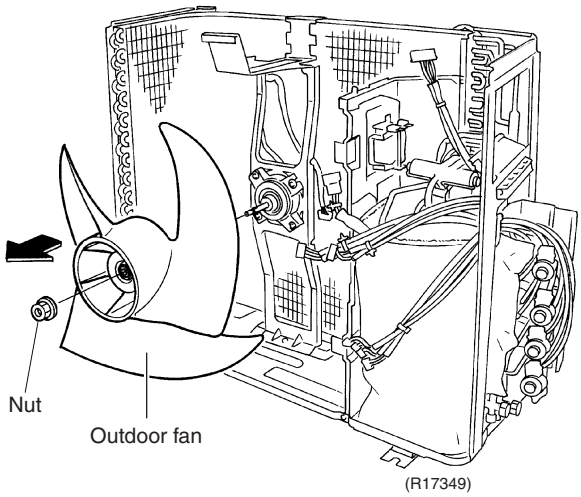	**Preparation** Disconnect the connector for the fan motor and release the fan motor lead wire according to the “Removal of Electrical Box”. ■ When reassembling, align the ▼ mark of outdoor fan with the D-cut section of motor shaft. ■ Nut size : M6 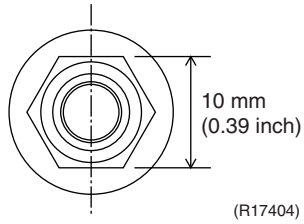
2	Remove the 2 screws of the fan motor fixing flame.	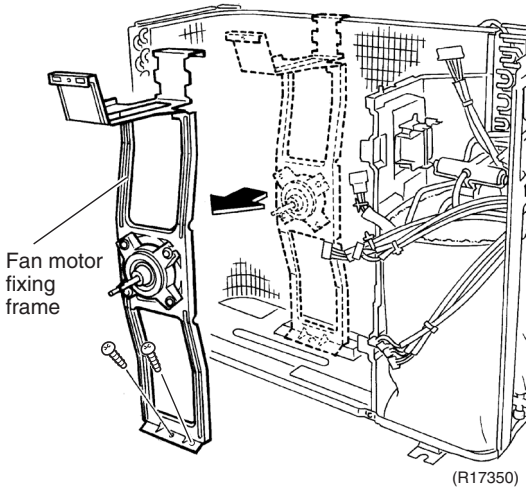	■ When reassembling, fix the fan motor lead wire to avoid contact with the outdoor fan.
3	Open the 2 hooks and release the fan motor lead wire.	(Backside) 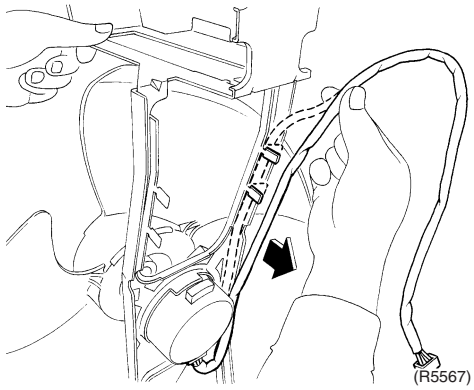	
4	Remove the 4 screws and remove the fan motor.	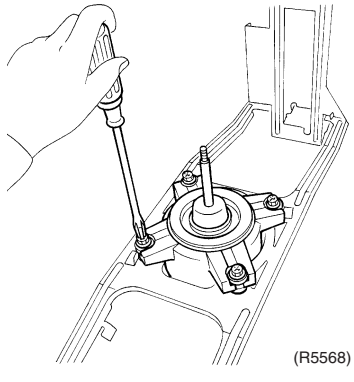	

1.5 Removal of Sound Blankets

Procedure

Warning **Be sure to wait for 10 minutes or more after turning off all power supplies before disassembling work.**

Step	Procedure		Points
1	Remove the 5 screws of the right side panel.	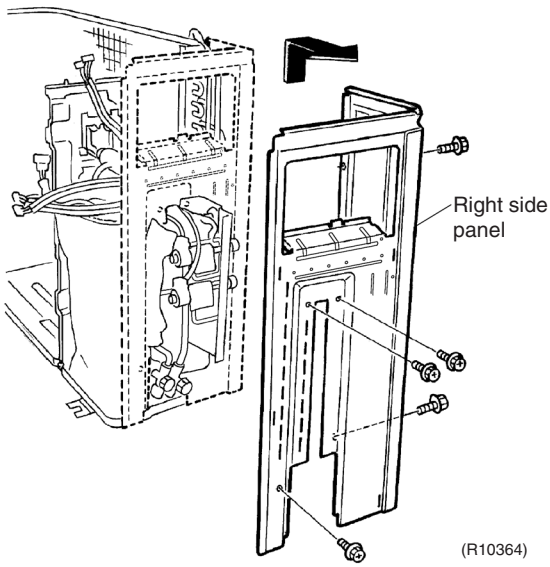	
2	Release the clamp with pliers.	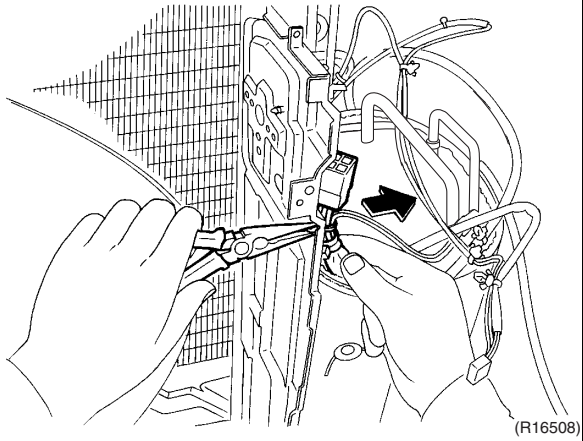	
3	Remove the 2 screws of the partition plate and remove it.	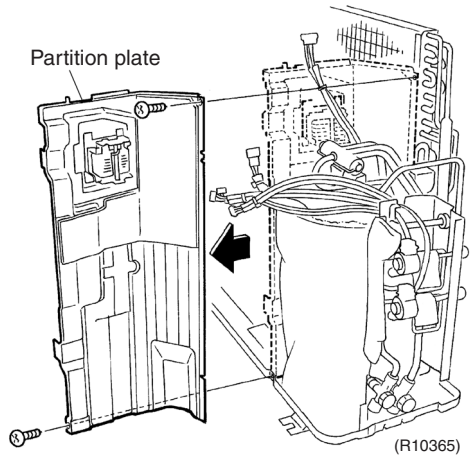	

Step	Procedure		Points
4	Remove the sound blankets (top upper, top inner, outer, inner).	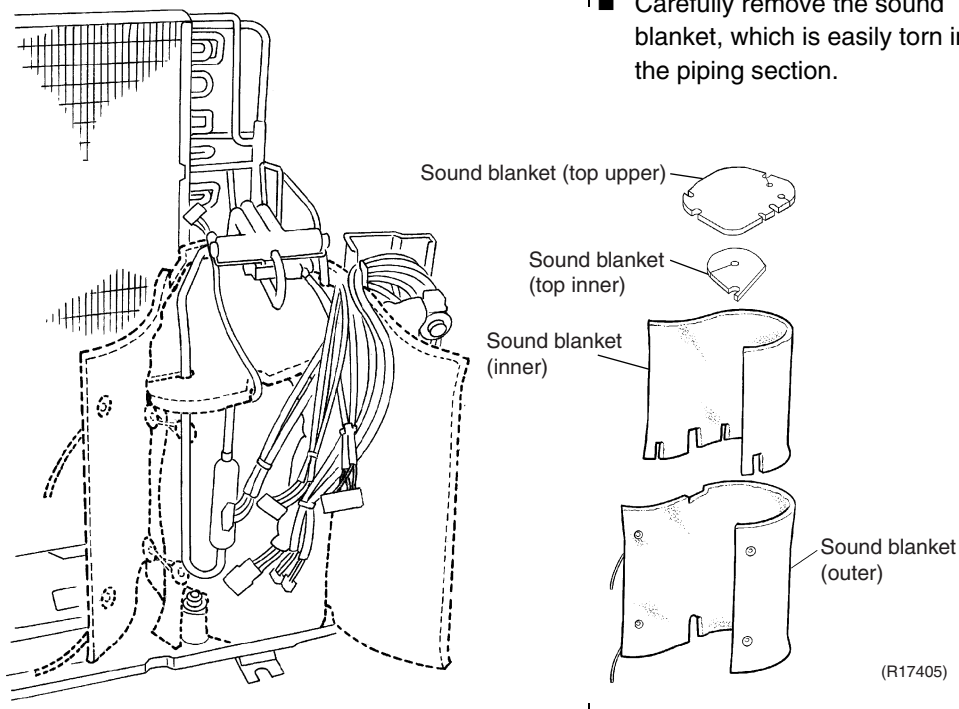	■ Carefully remove the sound blanket, which is easily torn in the piping section.

1.6 Removal of Coils / Thermistors

Procedure

Warning **Be sure to wait for 10 minutes or more after turning off all power supplies before disassembling work.**

Step	Procedure		Points
1	Remove the screw and remove the four-way valve coil.	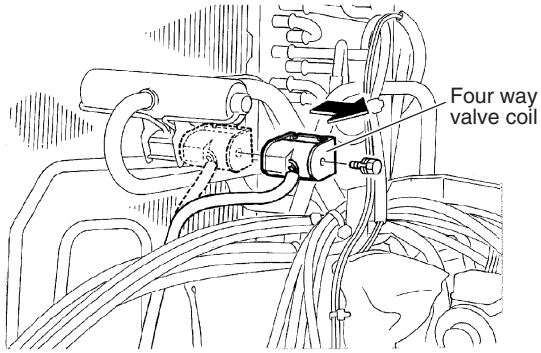 (R2194)	
2	Remove the screw and remove the defrost solenoid valve coil.	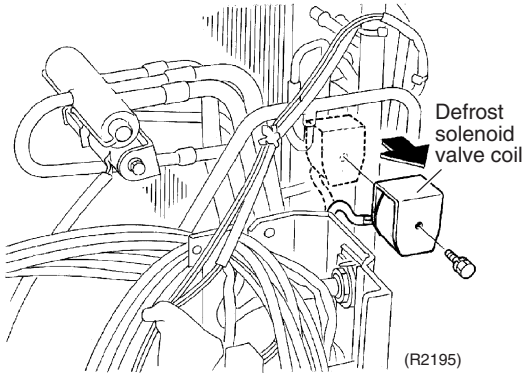 (R2195)	
3	Pull out the electronic expansion valve coil for each room.	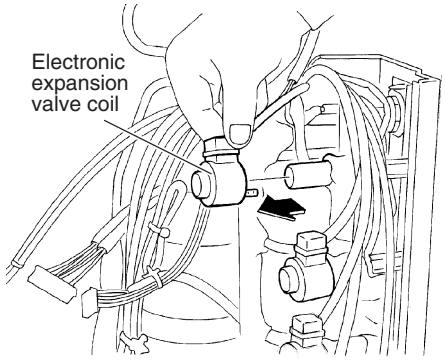 (R2196)	■ Place the thermistor so that its edge comes up to the edge of the fixture.
4	Remove the discharge pipe thermistor.	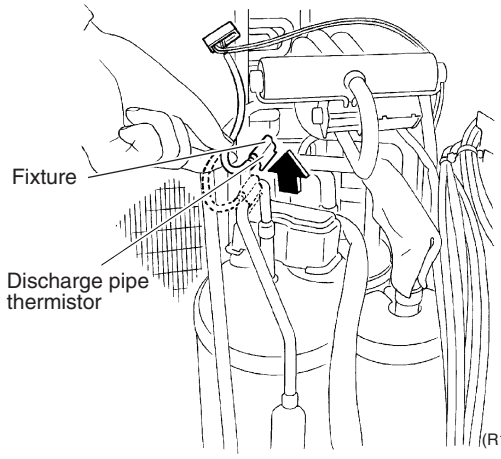 (R10367)	■ Be careful not to lose the fixture for the thermistor. 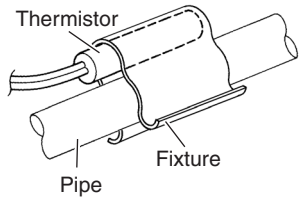 (R10536)

Step	Procedure		Points
5	Remove the putty, and remove each thermistor.	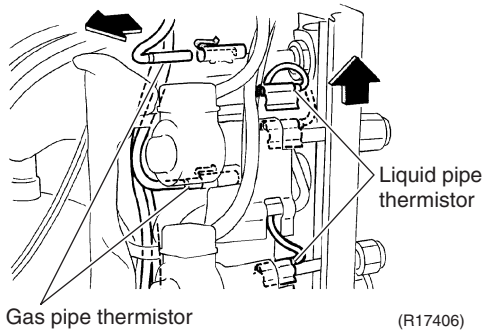	■ Place the thermistor so that its edge comes up to the edge of the fixture. ■ Be careful not to lose the clip and fixture for the thermistors.
6	Release the wire harnesses.	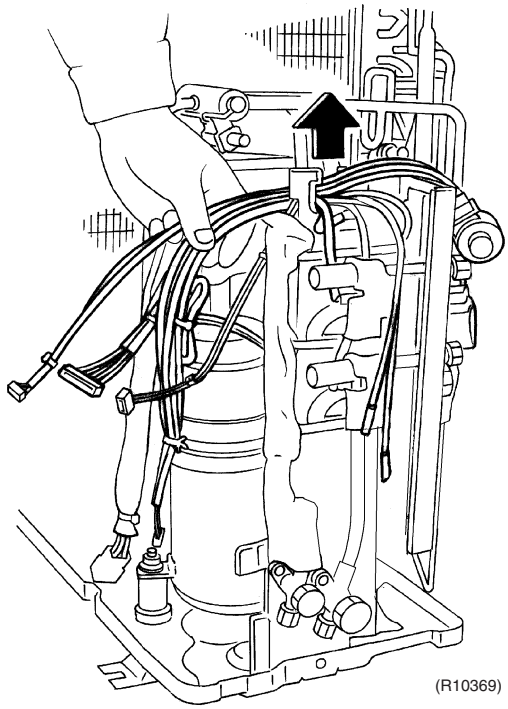	[S90]: outdoor temperature thermistor (blue) outdoor heat exchanger thermistor (gray) discharge pipe thermistor (black) [S92]: gas pipe thermistor room A (black) room B (gray) [S93]: liquid pipe thermistor room A (black) room B (gray)

1.7 Removal of Four-Way Valve / Defrost Solenoid Valve

Procedure

Warning **Be sure to wait for 10 minutes or more after turning off all power supplies before disassembling work.**

Step	Procedure		Points
1	Remove the screw and remove the four way valve coil.	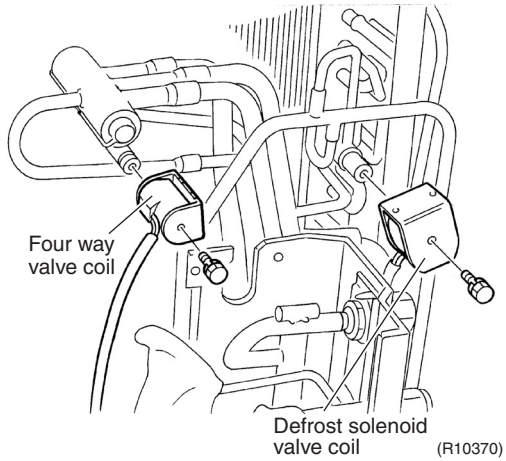	**Warning** **Be careful not to burn yourself with the pipes and other parts that are heated by the gas brazing machine.** **Warning** **If the refrigerant gas leaks during work, ventilate the room. (If the refrigerant gas is exposed to flames, toxic gas may be generated.)** **Caution** **For environment protection, do not discharge the refrigerant gas in the atmosphere. Make sure to collect all the refrigerant gas.**
2	Remove the screw and remove the defrost solenoid valve coil.		
■ Before working, make sure that the refrigerant gas is empty in the circuit. ■ Be sure to apply nitrogen replacement when heating up the brazed part.		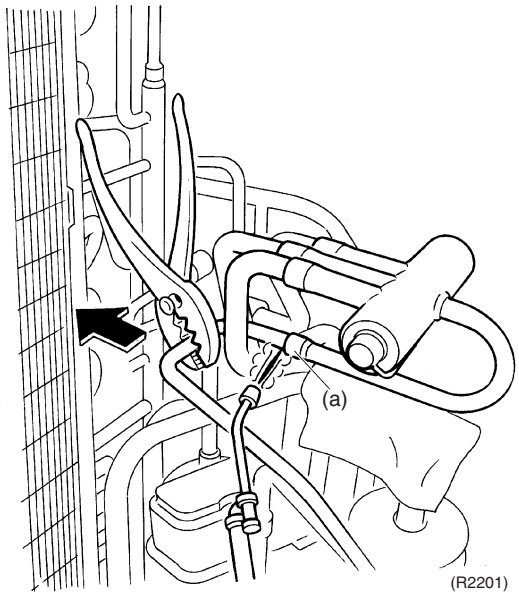	**Cautions for restoration** 1. Restore the piping by non-oxidation brazing. 2. It is required to prevent the carbonization of the oil inside the four-way valve and the deterioration of the gaskets affected by heat. Keep below 248°F(120°C). Wrap the four-way valve with wet cloth and provide water so that the cloth does not dry.
3	Heat the 4 brazed points of the four-way valve. Disconnect the point (a) first.		
4	Disconnect the points (b) and (c).	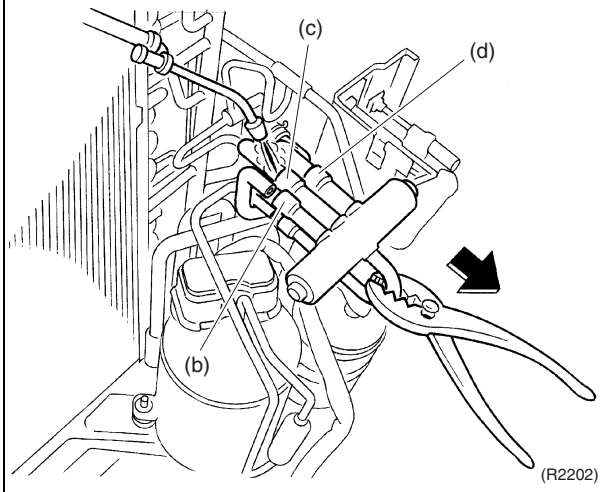	**In case of difficulty with gas brazing machine** 1. Disconnect the brazed part where is easy to disconnect and restore. 2. Cut pipes on the main unit with a tube cutter in order to make it easy to disconnect.
5	Disconnect the point (d) and remove the four-way valve.		

Step	Procedure		Points
6	Disconnect the 2 brazed points, first (e), and then (f). Remove the defrost solenoid valve.	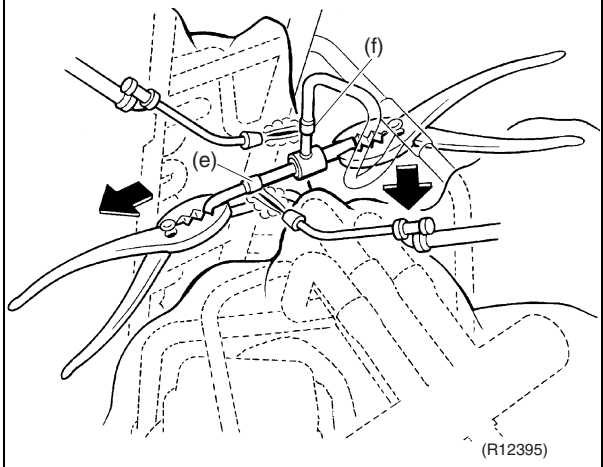	**Note:** ■ Do not use a metal saw for cutting pipes or sawdust will enter the circuit. ■ When withdrawing the pipes, be careful not to pinch them firmly with pliers. The pipes may get deformed. ■ Provide a protective sheet or a steel plate so that the brazing flame cannot influence peripheries.

1.8 Removal of Distributor

Procedure

Warning **Be sure to wait for 10 minutes or more after turning off all power supplies before disassembling work.**

Step	Procedure	Points
■ Before working, make sure that the refrigerant gas is empty in the circuit. ■ Be sure to apply nitrogen replacement when heating up the brazed part.		**Warning** **Be careful not to burn yourself with the pipes and other parts that are heated by the gas brazing machine.**
1	Remove the putty.	**Warning** **If the refrigerant gas leaks during work, immediately ventilate the room. (If the refrigerant gas is exposed to flames, toxic gas may be generated.)**
2	Heat up and disconnect the 5 brazed parts to remove the distributor.	**Caution** **For global environment protection, do not discharge the refrigerant gas in the atmosphere. Make sure to collect all the refrigerant gas.**
Note: ■ Do not use a metal saw for cutting pipes or sawdust will enter the circuit. ■ When withdrawing the pipes, be careful not to pinch them firmly with pliers. The pipes may get deformed. ■ Provide a protective sheet or a steel plate so that the brazing flame cannot influence peripheries.	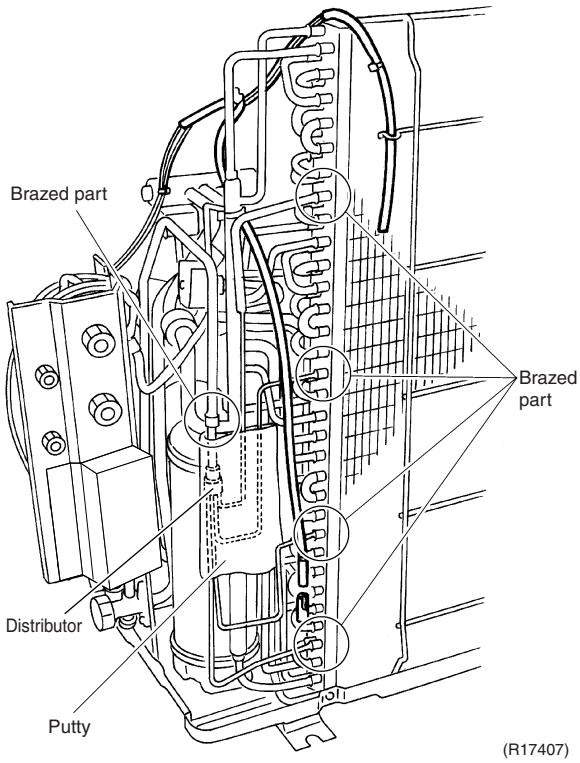	**Cautions for restoration** 1. Restore the piping by non-oxidation brazing. 2. It is required to prevent the carbonization of the oil inside the four-way valve and the deterioration of the gaskets affected by heat. Keep below 248°F(120°C). Wrap the four-way valve with wet cloth and provide water so that the cloth does not dry. **In case of difficulty with gas brazing machine** 1. Disconnect the brazed part where is easy to disconnect and restore. 2. Cut pipes on the main unit with a tube cutter in order to make it easy to disconnect.

1.9 Removal of Compressor

Procedure

Warning **Be sure to wait for 10 minutes or more after turning off all power supplies before disassembling work.**

Step	Procedure		Points
1	Remove the terminal cover.	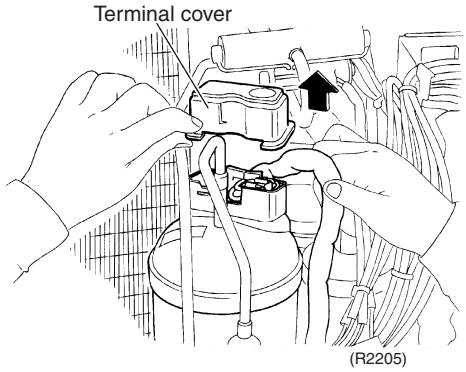	
2	Disconnect the compressor lead wires.	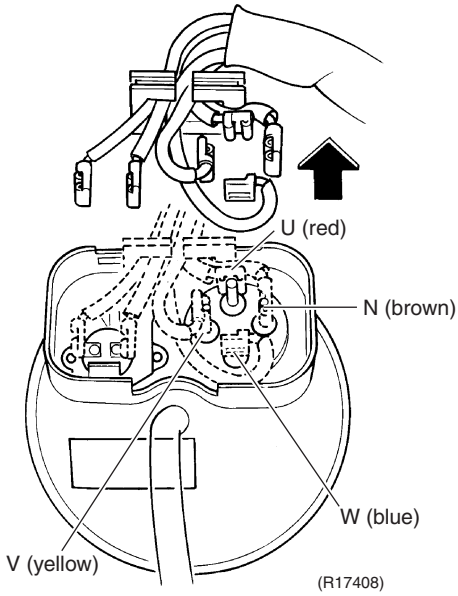	
3	Remove the 2 sheets of putty.	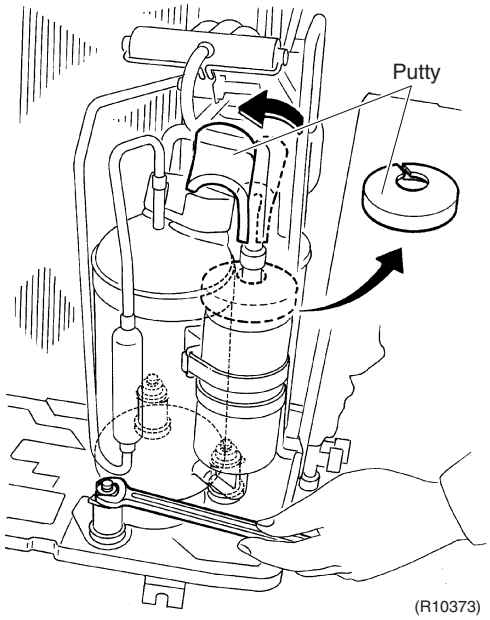	
4	Remove the 3 nuts.		

Step	Procedure	Points
■ Before working, make sure that the refrigerant gas is empty in the circuit. ■ Be sure to apply nitrogen replacement when heating up the brazed part.	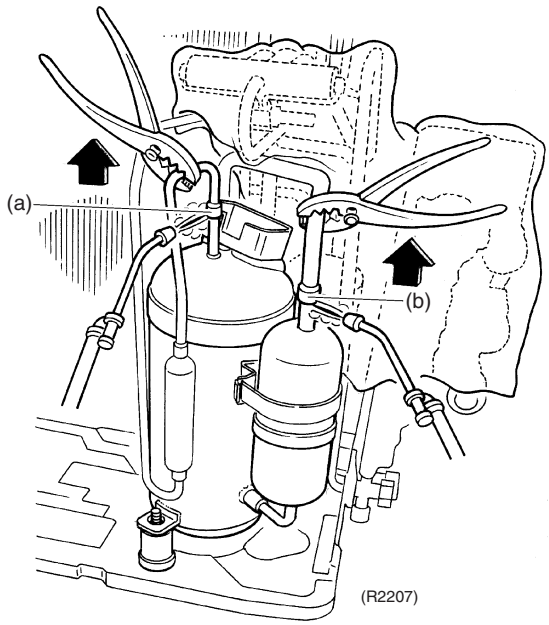	**Warning** **Be careful not to get yourself burnt with pipes and other parts that are heated by the gas brazing machine.** **Warning** **If the refrigerant gas leaks during work, ventilate the room. (If the refrigerant gas is exposed to flames, toxic gas may be generated.)** **Warning** **Since it may happen that the refrigerant oil in the compressor catches fire, prepare wet cloth so as to extinguish fire immediately.** **Caution** **For environment protection, do not discharge the refrigerant gas in the atmosphere. Make sure to collect all the refrigerant gas.** **Cautions for restoration** 1. Restore the piping by non-oxidation brazing. 2. It is required to prevent the carbonization of the oil inside the four-way valve and the deterioration of the gaskets affected by heat. Keep below 248°F(120°C). Wrap the four-way valve with wet cloth and provide water so that the cloth does not dry. **In case of difficulty with gas brazing machine** 1. Disconnect the brazed part where is easy to disconnect and restore. 2. Cut pipes on the main unit with a tube cutter in order to make it easy to disconnect.
5	Disconnect the brazed part (a) at discharge side of the compressor.	
6	Disconnect the brazed part (b) at suction side of the compressor.	
7	Lift the compressor up and remove it.	
Note: ■ Do not use a metal saw for cutting pipes or sawdust will enter the circuit. ■ When withdrawing the pipes, be careful not to pinch them firmly with pliers. The pipes may get deformed. ■ Provide a protective sheet or a steel plate so that the brazing flame cannot influence peripheries. ■ Be careful so as not to burn the compressor terminals, the name plate, the outdoor heat exchanger fin.		

2. Outdoor Unit: 3MXS24JVJU, 4MXS32GVJU

2.1 Removal of Outer Panels

Procedure

Warning **Be sure to wait for 10 minutes or more after turning off all power supplies before disassembling work.**

Step	Procedure		Points
	Appearance features	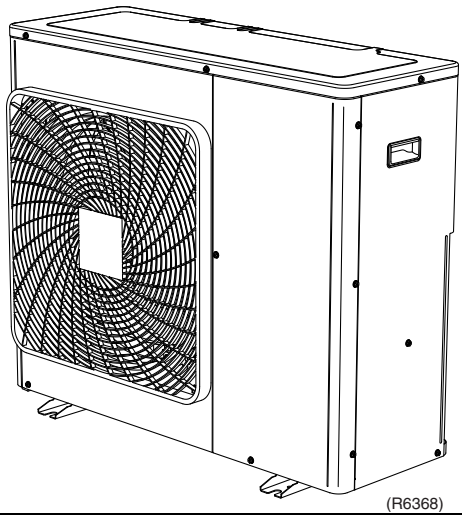 (R6368)	
1. Remove the suction grille.			■ The hooks are secured in the clearances of the outdoor heat exchanger fins.
1	Unfasten the 2 hooks at the bottom first.	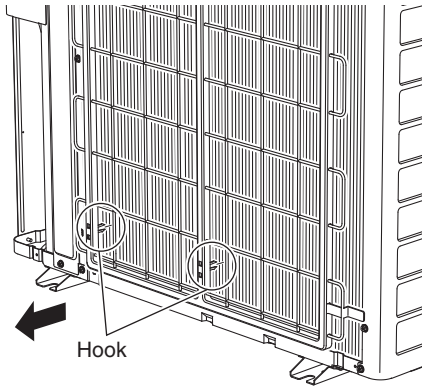 (R14612) 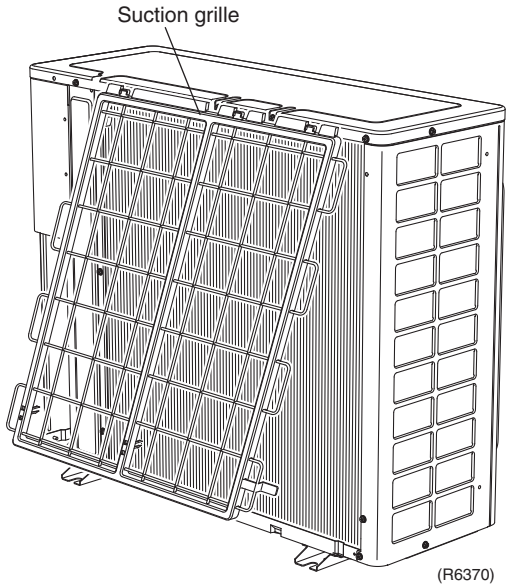 (R6370)	

Step	Procedure		Points
2	Slide the suction grille downward to unfasten the 3 top hooks.	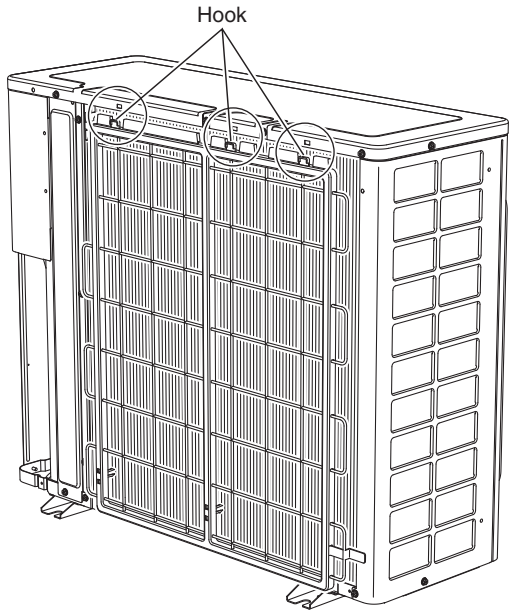 (R14613)	
3	Remove the suction grille.	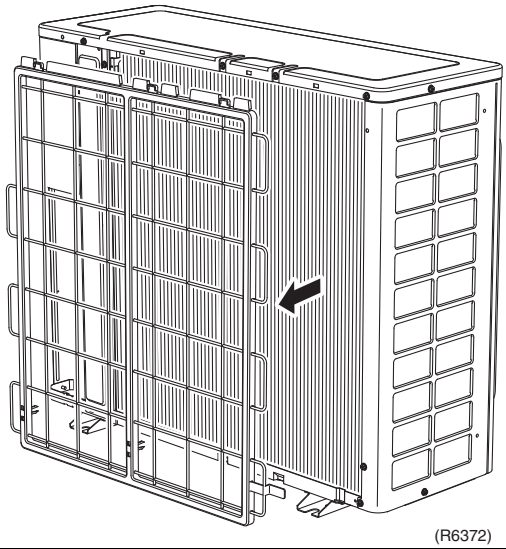 (R6372)	
2. Remove the top panel.			
1	Remove the 4 screws on the back and the screw on the left side.	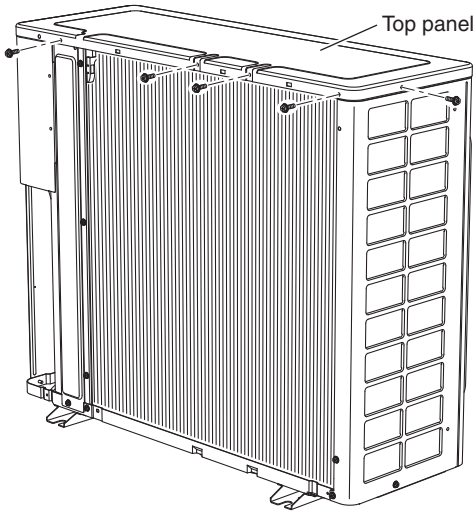 (R17409)	

Step	Procedure		Points
2	Remove the 2 screws on the front and the screw on the right side panel.	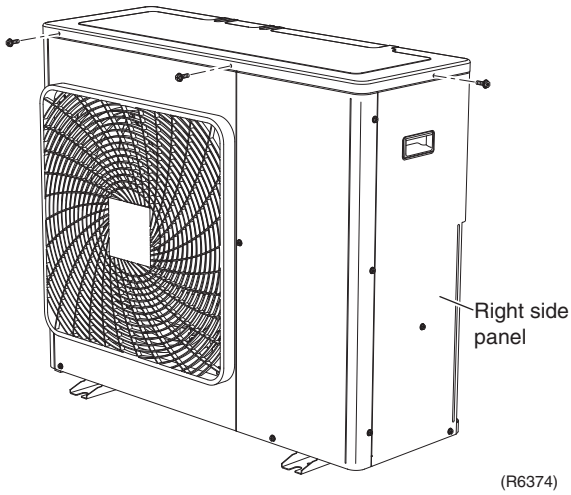	
3	Lift the top panel and remove it.	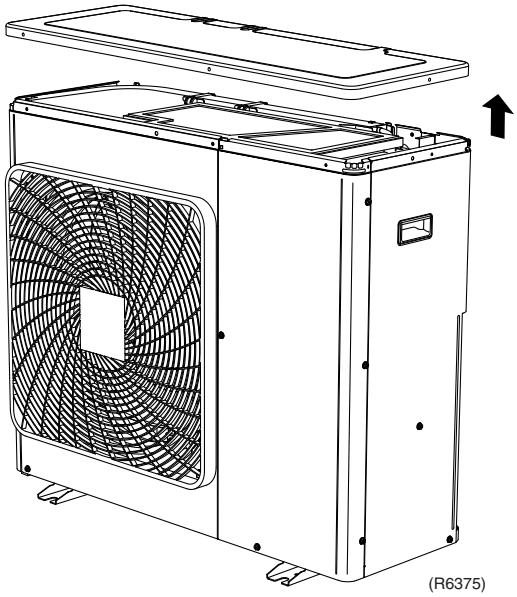	
3. Remove the right side panel.			
1	Remove the 5 screws.	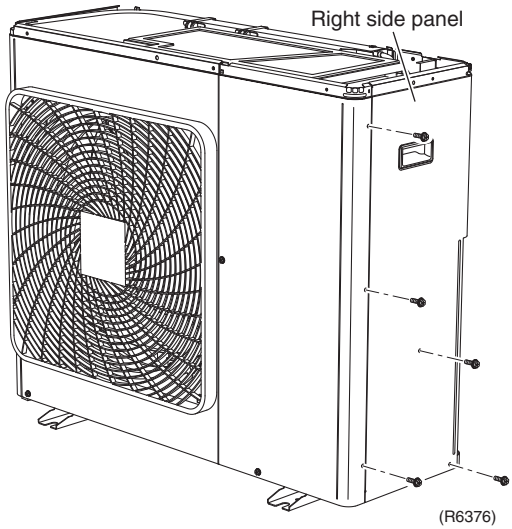	

Step	Procedure		Points
2	Slide the right side panel downward to unfasten the 2 hooks on the back side.	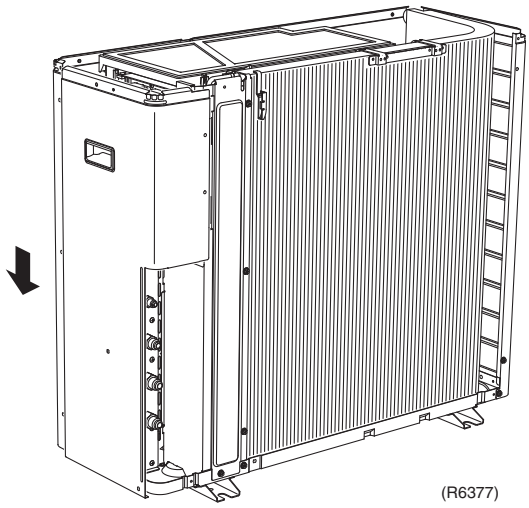 (R6377) 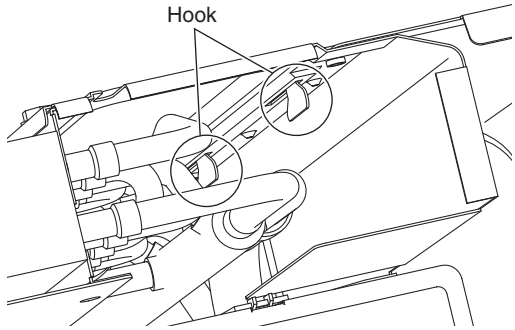 (R14614) 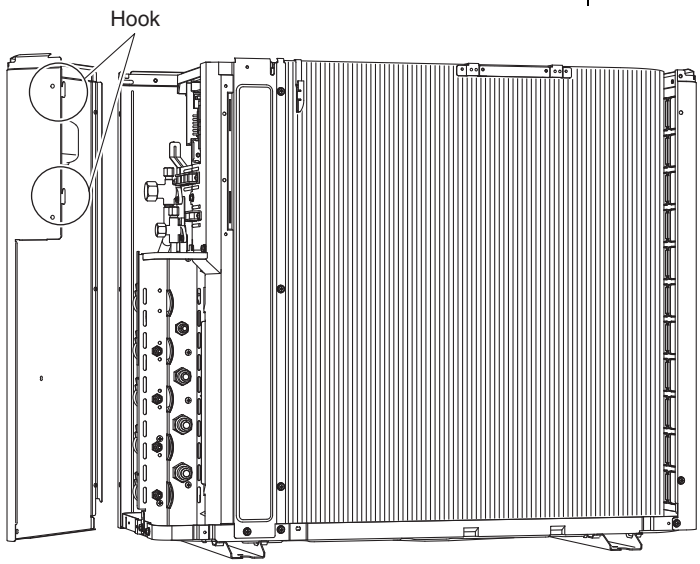 (R14615)	

Step	Procedure		Points
3	Remove the right side panel.	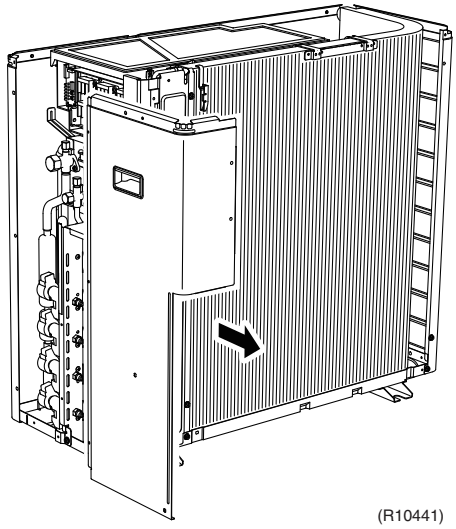 (R10441)	■ The US model has a service lid on the stop valve mounting plate. Remove the 2 screws to remove the service lid. 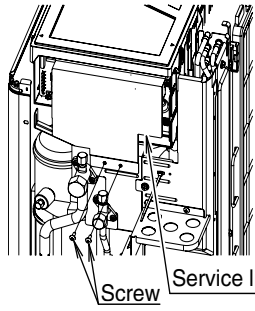 (R10372) ■ This model has a conduit mounting plate. 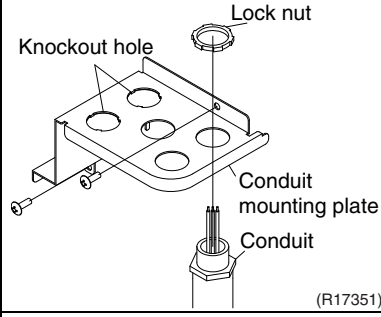 (R17351)
4. Remove the front panel (2).			
1	Remove the 2 screws.	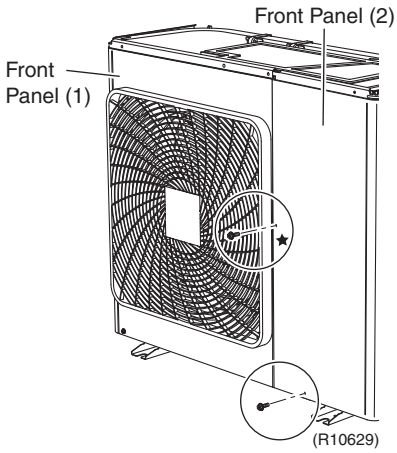 (R10629)	★ This screw is M5 × 16
2	Slide the front panel (2) panel downward to unfasten the hook.	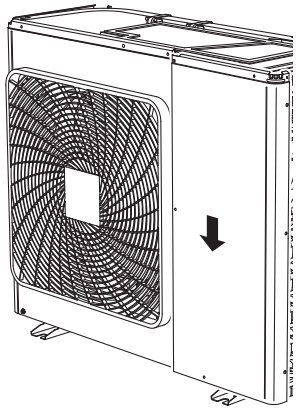 (R10374)	

Step	Procedure		Points
3	Remove the front panel (2).	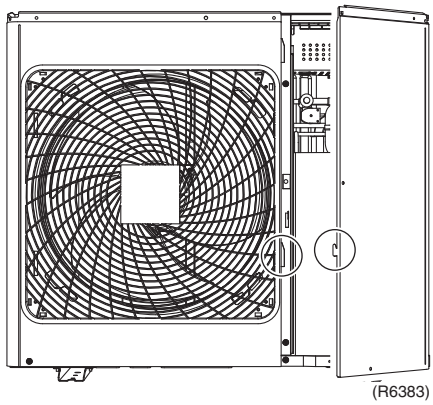 (R6383) 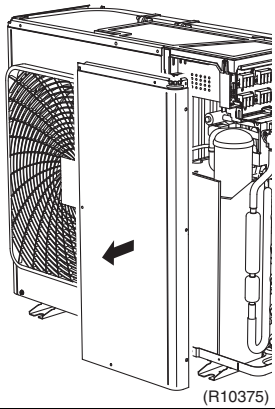 (R10375)	
5. Remove the front panel (1).			■ Remove the discharge grille and outdoor fan first to remove the front panel (1).
1	Remove the 4 screws on the discharge grille.	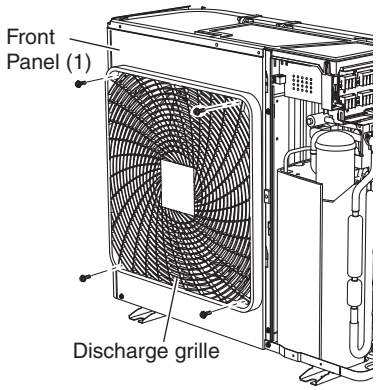 (R10376)	
2	Pull the bottom of the discharge grille.	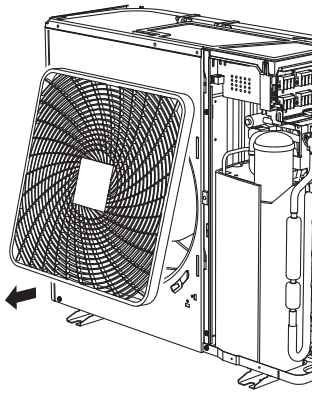 (R10377)	

Step	Procedure		Points
3	Slide the discharge grille downward to unfasten the 2 hooks at the top.	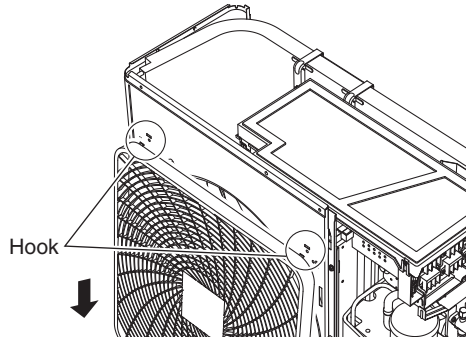 (R17173)	
4	Remove the discharge grille.	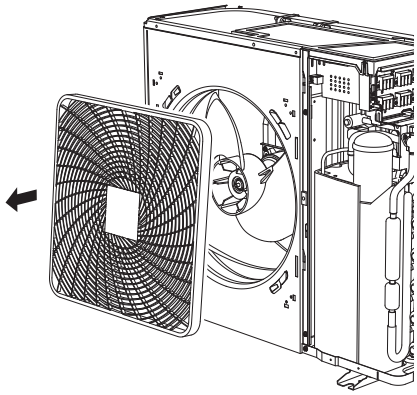 (R10380)	
5	Remove the nut and remove the outdoor fan.	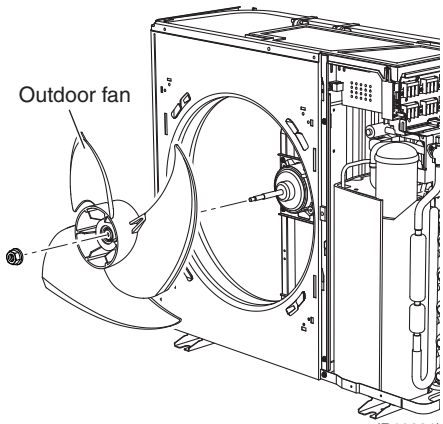 (R10381)	■ Nut size : M8 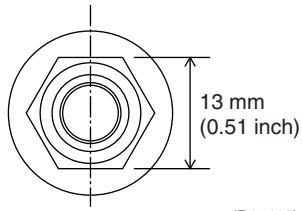 (R17410) ■ When reassembling, align the ▼ mark of the outdoor fan with the D-cut section of the motor shaft.

Step	Procedure		Points
6	Remove the 2 screws of the partition plate (1).	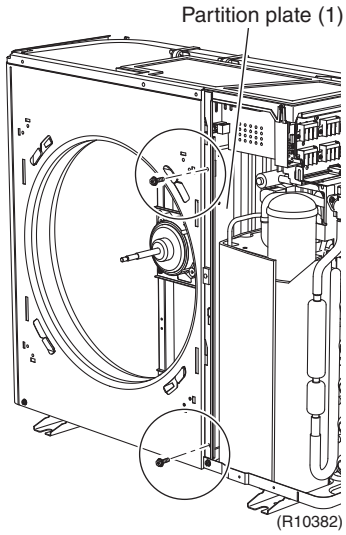	
7	Remove the screw at the bottom left of the front panel (1).	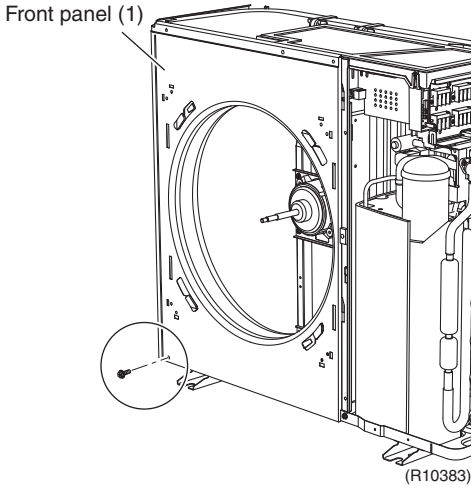	
8	Remove the screw at the bottom of the left side.	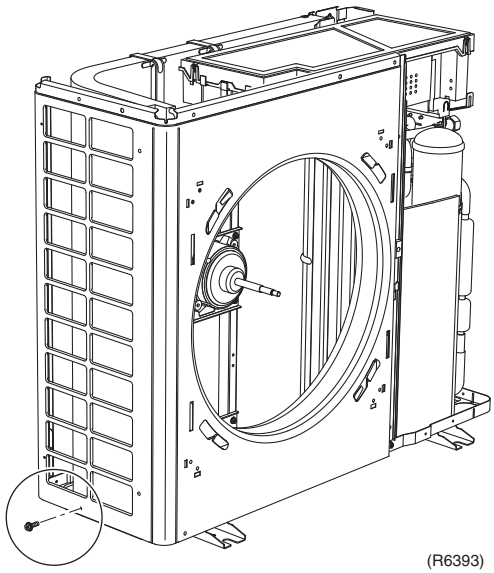	

Step	Procedure		Points
9	Remove the screw at the bottom of the back side.	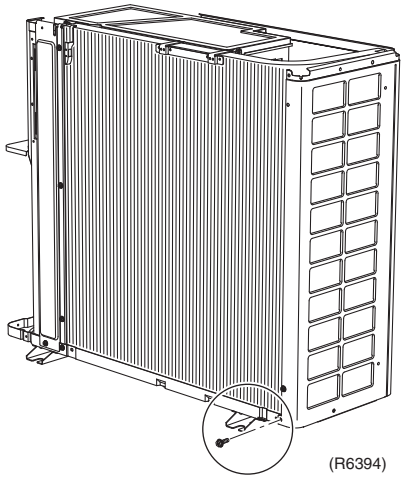 (R6394)	
10	The front panel (1) has a hook. Lift the front panel (1).	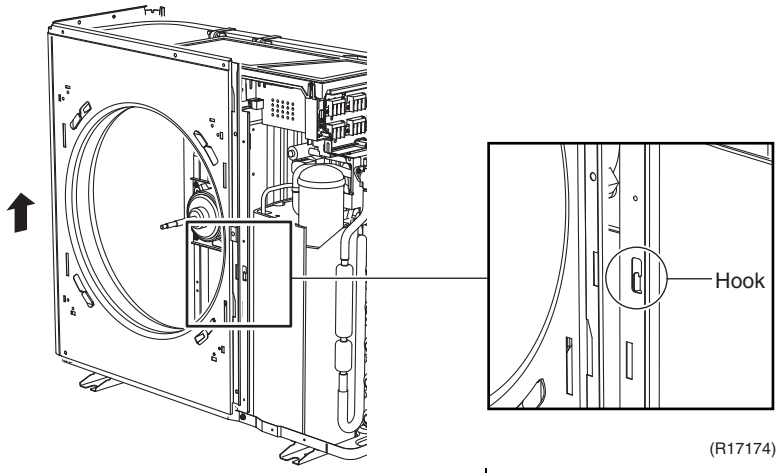 (R17174)	
11	Remove the front panel (1).	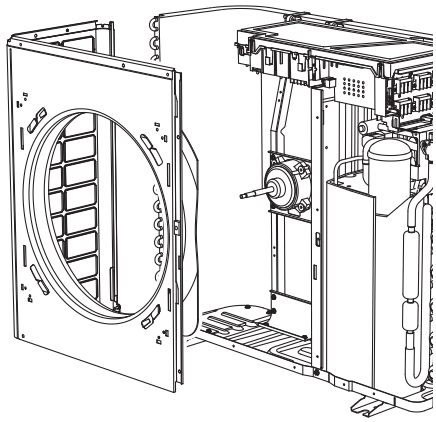 (R10385) 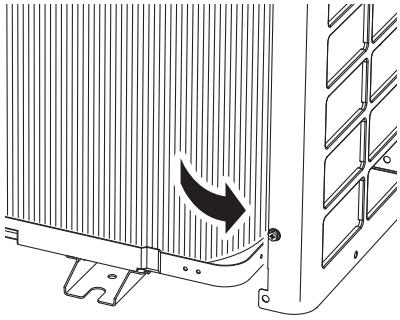 (R6396)	■ Be sure to detach the front panel (1) carefully so as not to deform it.

Step	Procedure	Points
6. Remove the rear panel.		
1	Remove the 2 screw on the partition plate (2). 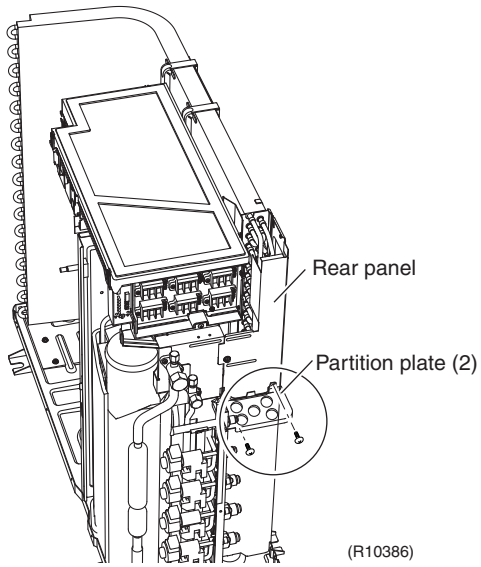	
2	Slide the partition plate (2) to the left and remove it. 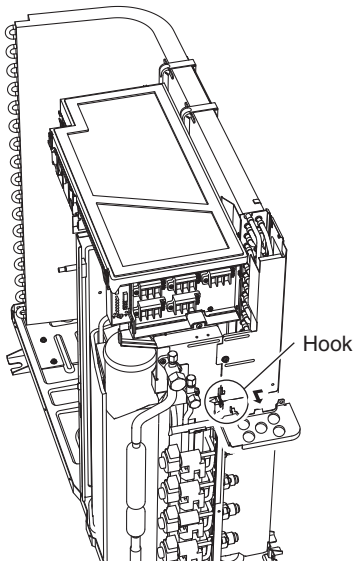	■ When reassembling, bundle the wires with clamp. ■ When reassembling, pass the wires through the partition plate (2). 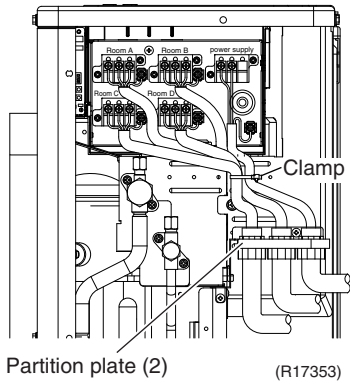
3	Release the holder of the outdoor temperature thermistor. 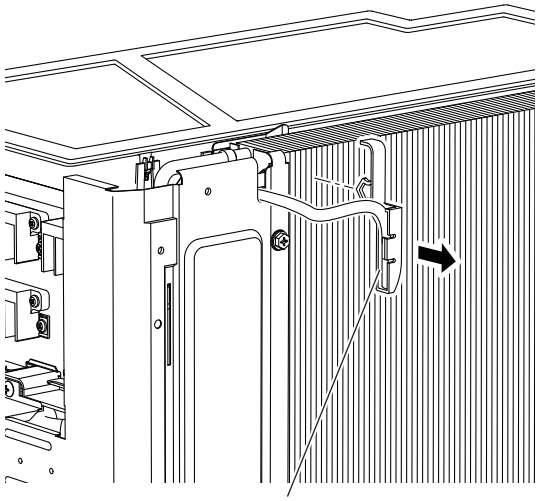	■ The holder is secured in the clearances of the heat exchanger fins.

Step	Procedure		Points
4	Release the thermistor wire from the groove.	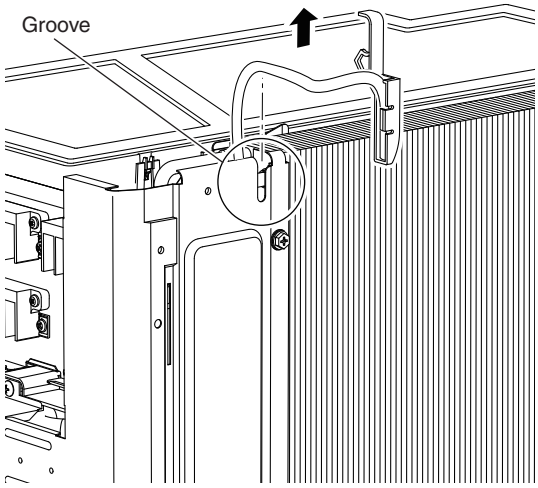 (R10389)	
5	Remove the 3 screws on the rear panel.	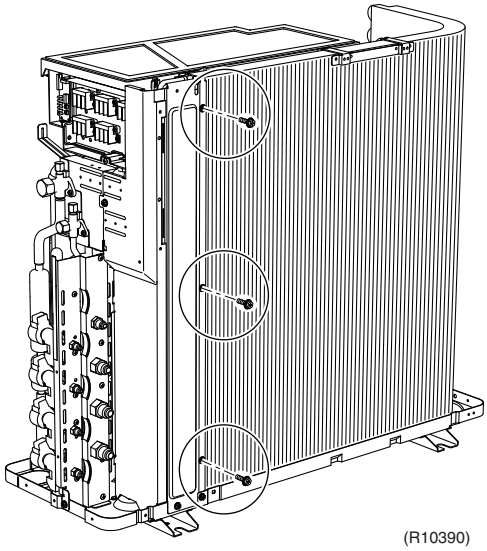 (R10390)	
6	Remove the screw on the bottom frame.	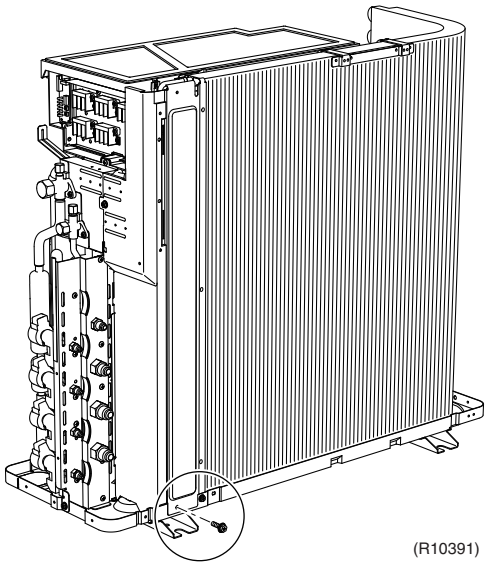 (R10391)	

Step	Procedure		Points
7	Remove the screw on the stop valve mounting plate.	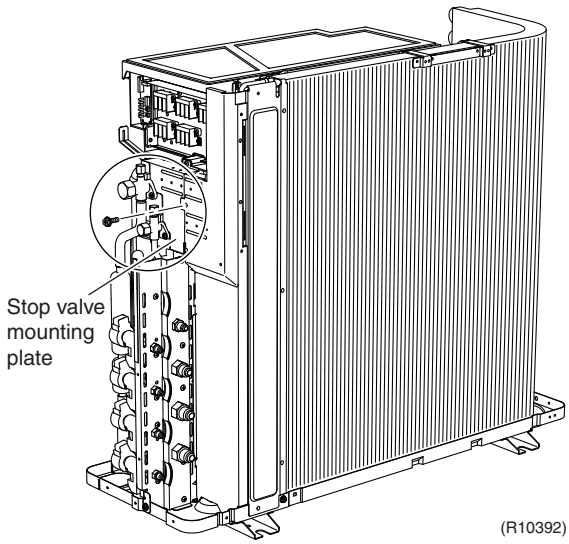	
8	Lift the rear panel to unfasten the 2 hooks.	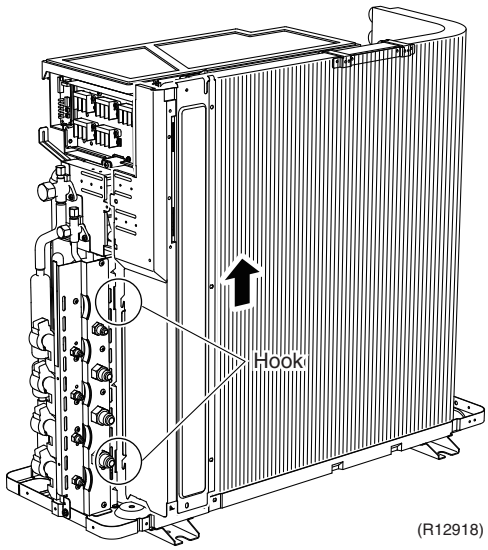	
9	Remove the rear panel.	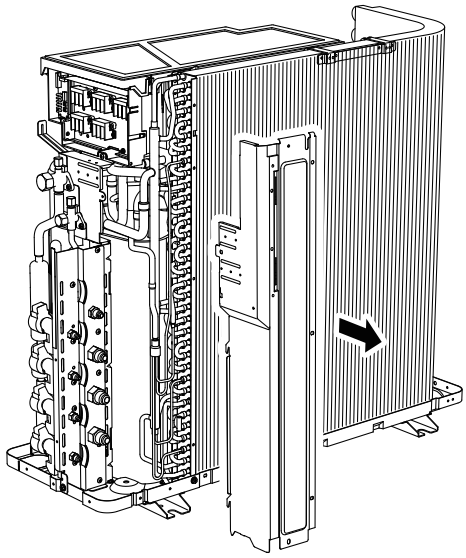	

2.2 Removal of Electrical Box

Procedure

Warning **Be sure to wait for 10 minutes or more after turning off all power supplies before disassembling work.**

Step	Procedure		Points
1	Remove the 2 screws to detach the ground wires.	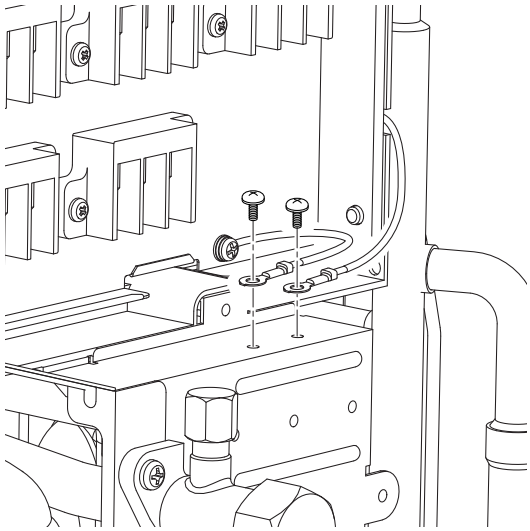 (R10396)	
2	Disconnect the connector for the fan motor [S70].	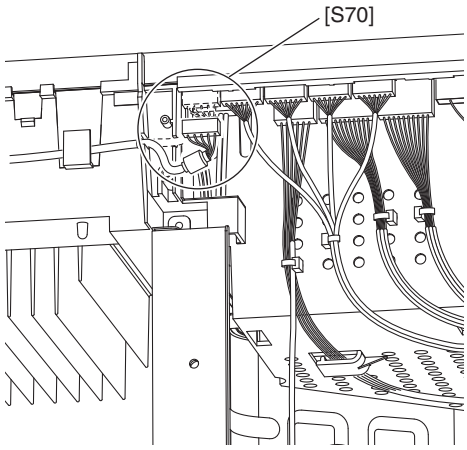 (R10397)	
3	Release the fan motor lead wire.	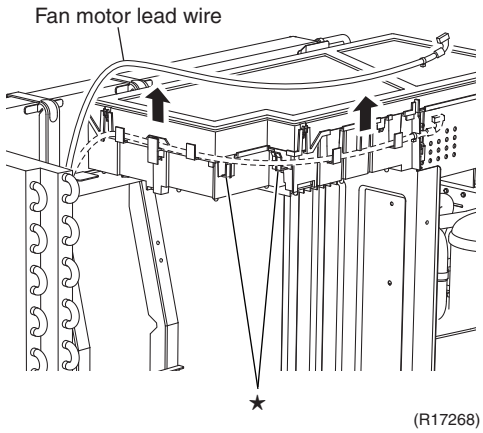 (R17268)	★: When reassembling, do not use these 2 hooks.

Step	Procedure		Points
4	Disconnect the connector for the four-way valve coil [S80].	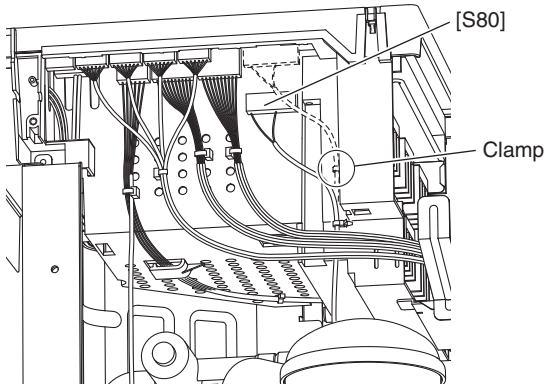 (R10398)	■ Pull out the clamp.
5	Disconnect the 4 connectors for the electronic expansion valve coils (for room A, B, C, D) and pull out the clamp.	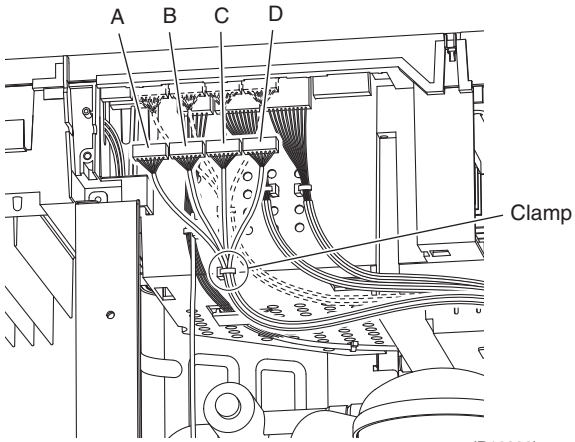 (R10399)	■ A : [S20] (white) B : [S21] (red) C : [S22] (blue) D : [S23] (yellow) ■ The 3MXS model does not have [S23]. ■ When reassembling, insert each clamp into the hole. 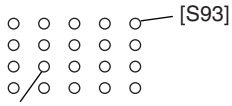 (R17354)
6	Disconnect the connector for the liquid pipe thermistors [S93] and pull out the clamp.	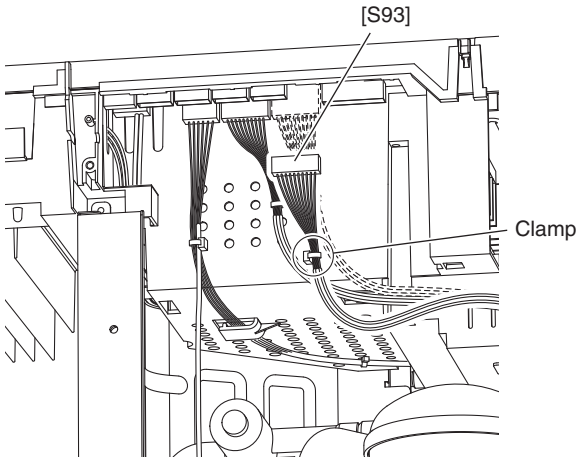 (R10400)	

Step	Procedure		Points
7	Disconnect the connector for the gas pipe thermistors [S92] and pull out the clamp.	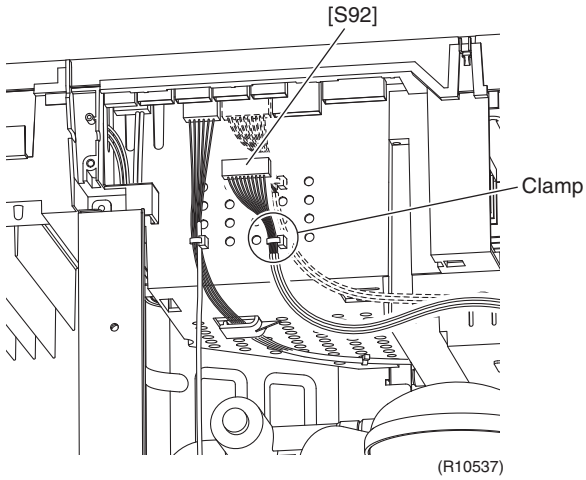	■ When reassembling, insert the clamp into the hole. 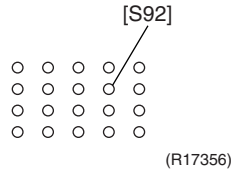
8	Disconnect the connector for the thermistors [S90] and pull out the clamp.	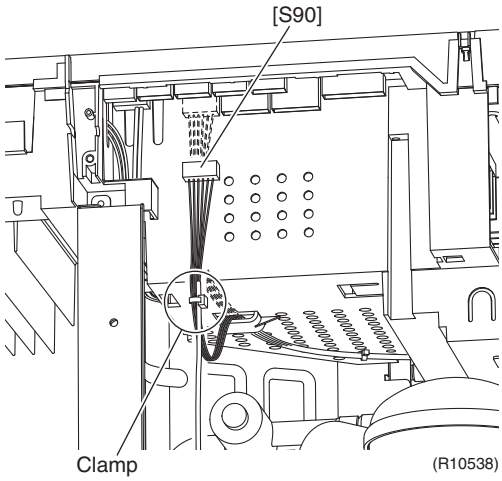	■ When reassembling, insert the clamp into the hole. 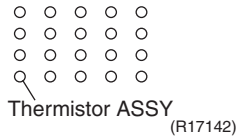
9	The wire harness of the thermistors is hooked under the electrical box. Unhook it and pull out the clamp.	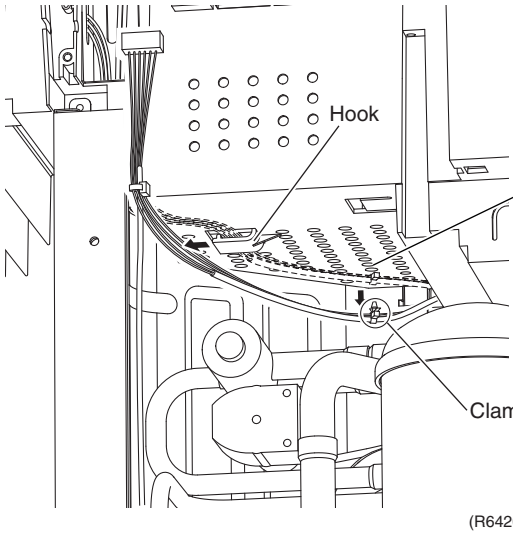	■ When reassembling, insert the clamp into the small hole. 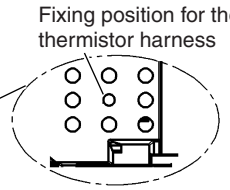

Step	Procedure		Points
10	Disconnect the connector for the overload protector [S40].	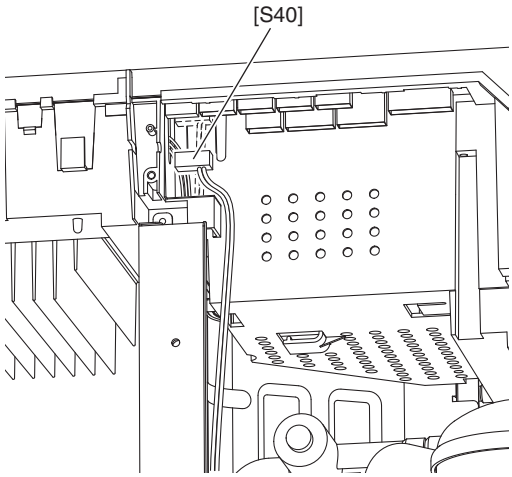 (R10539)	
11	The wire harness for the compressor is attached to the partition plate (1) by the clamp.	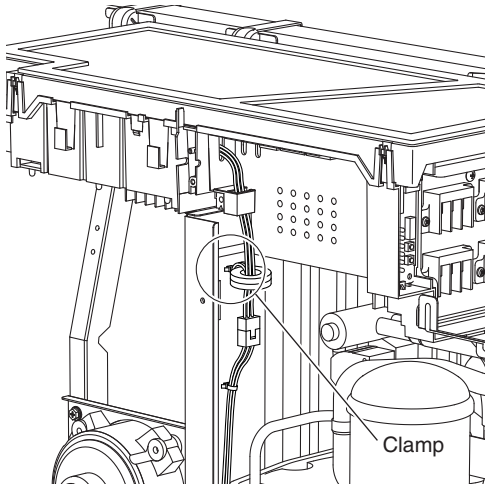 (R6422)	
12	Pull out the clamp with pliers.	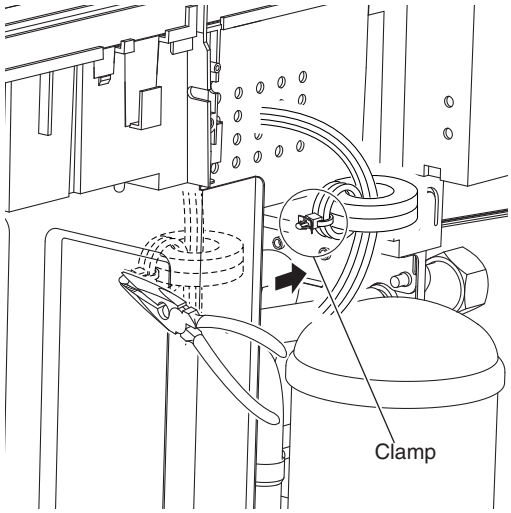 (R6423)	

Step	Procedure		Points
13	Disconnect the relay connector of the compressor.	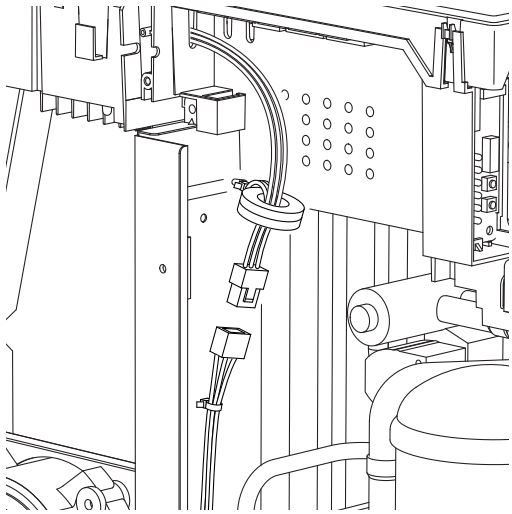 (R6469)	
14	Remove the screw on the stop valve mounting plate.	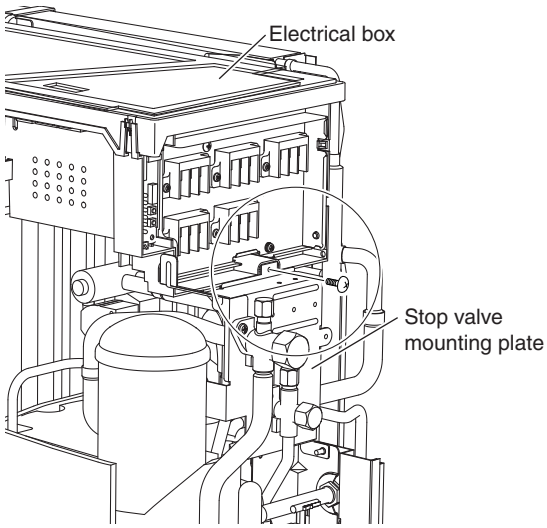 (R10395)	
15	Remove the screw on the partition plate (1).	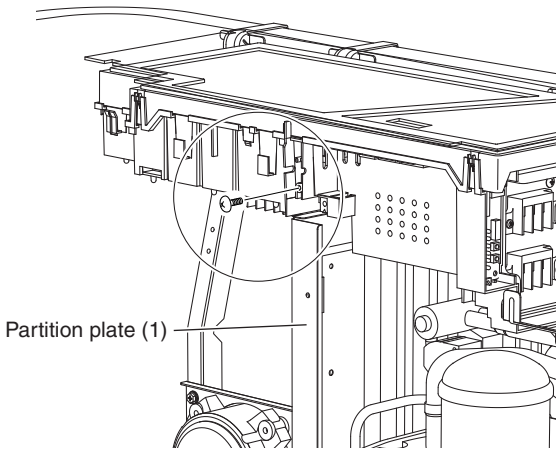 (R6411)	

Step	Procedure		Points
16	Slide the electrical box leftward to unfasten the hook on the right side.	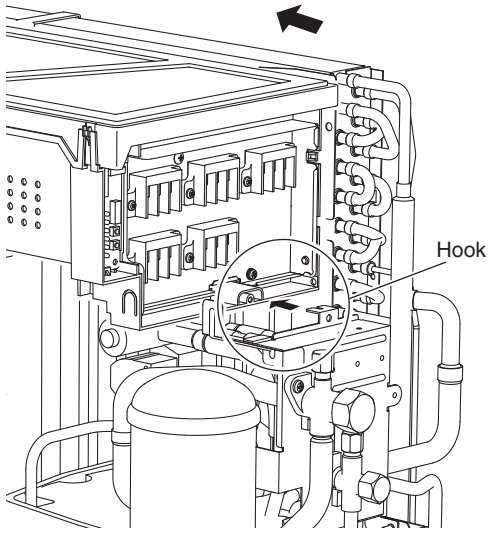 (R10401)	
17	Remove the electrical box.	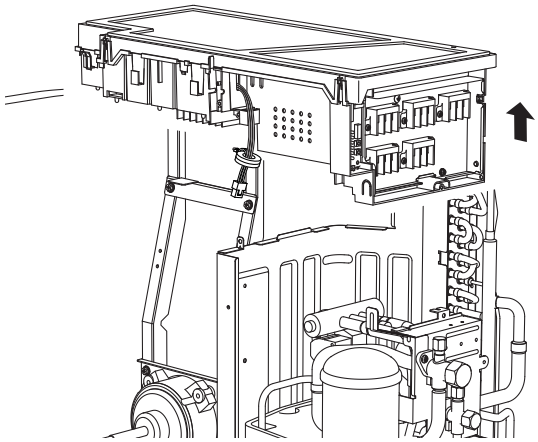 (R10402)	

2.3 Removal of PCBs

Procedure

Warning **Be sure to wait for 10 minutes or more after turning off all power supplies before disassembling work.**

Step	Procedure		Points
1. Remove the main PCB.			
1	Open the cover of the electrical box.	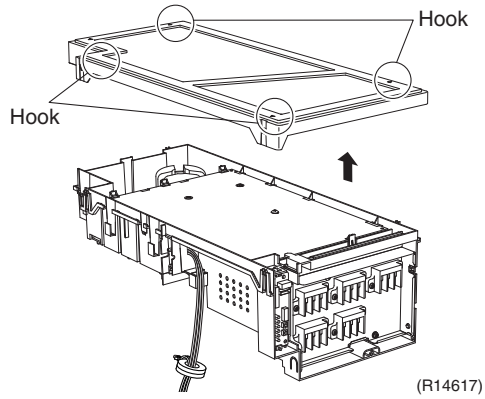	■ Unfasten the 4 hooks. The hooks are marked with ▼. 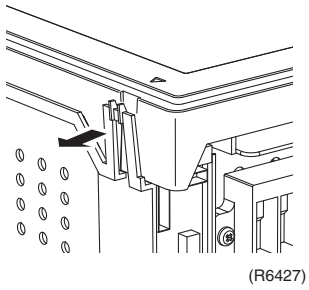
2	Remove the 3 screws.	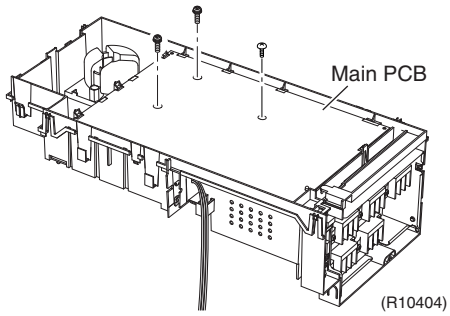	
3	Unfasten the 4 hooks.	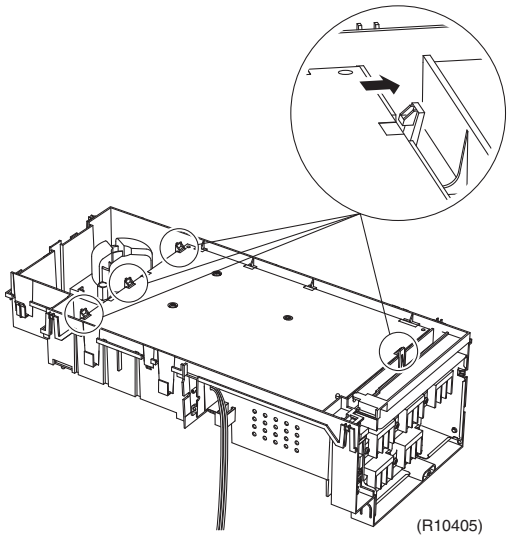	
4	Lift up the main PCB.	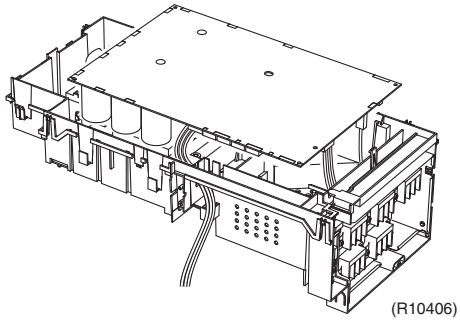	

Step	Procedure		Points
5	Disconnect the connectors.	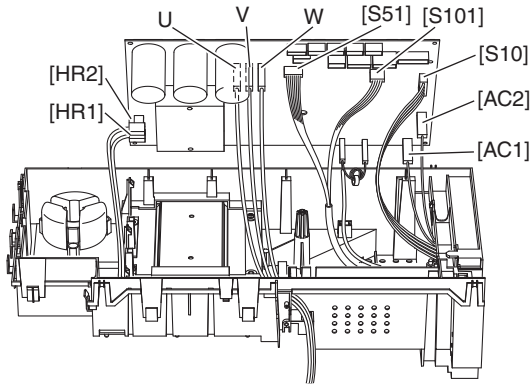 (R10407)	■ Refer to page 33 for detail. [S51] [S101] : service monitor PCB [S10] : terminal board (transmission) [HR1] [HR2] : reactor [AC1] [AC2] : terminal board (power supply) [U] [V] [W] : compressor
6	Remove the main PCB.	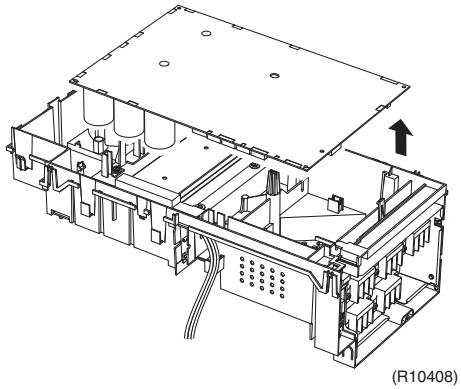 (R10408)	
2. Remove the reactor.			
1	Remove the screw.	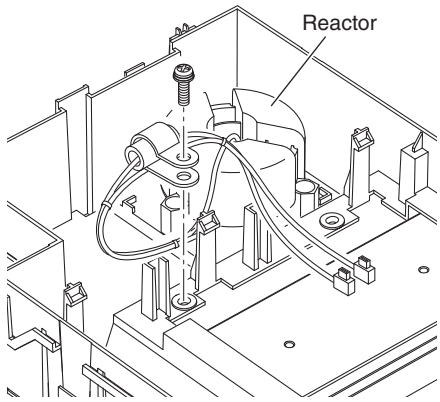 (R10409)	
2	Remove the 3 screws and lift the reactor upward to remove it.	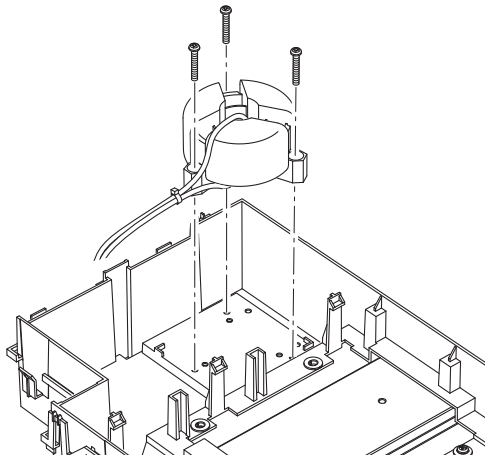 (R6434)	

Step	Procedure	Points
3. Remove the service monitor PCB.		
1	Disconnect the connectors from the service monitor PCB [S52] [S102].	
2	Slightly lift the top hook to unfasten it.	
3	Unfasten the bottom hook to remove the service monitor PCB.	

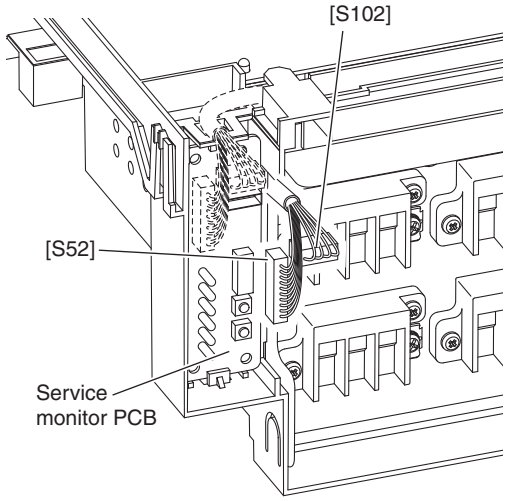

(R10410)

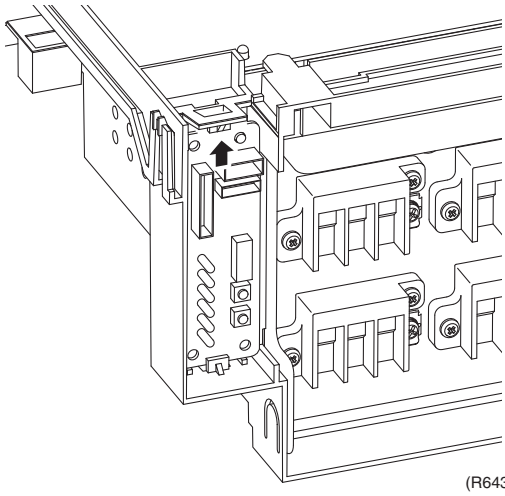
(R6436)

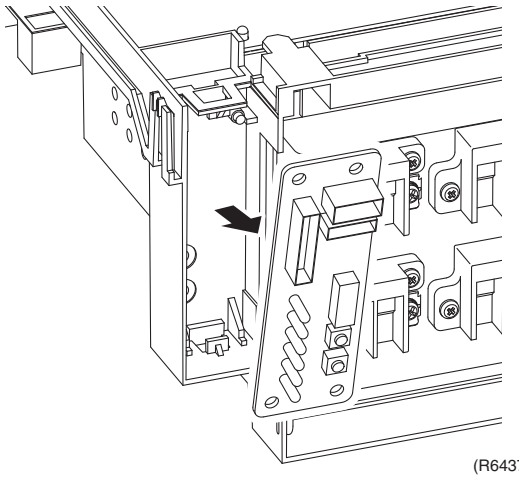
(R6437)

Step	Procedure	Points
4. Remove the terminal board.		
1	Remove the screw. 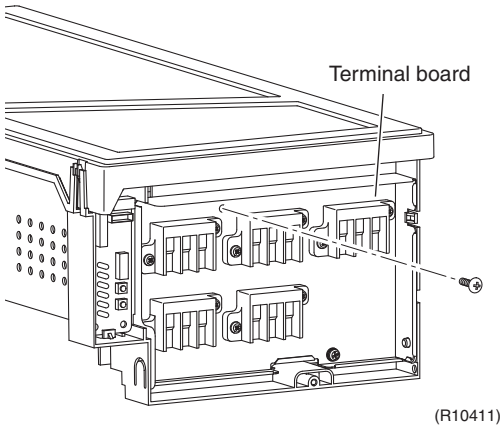	
2	Unfasten the hook. 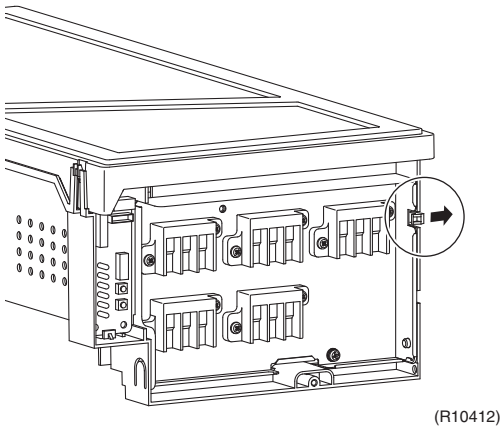	
3	Remove the terminal board. 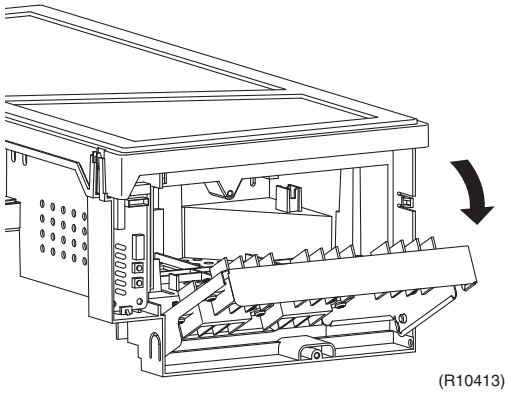	

2.4 Removal of Fan Motor

Procedure

Warning **Be sure to wait for 10 minutes or more after turning off all power supplies before disassembling work.**

Step	Procedure		Points
		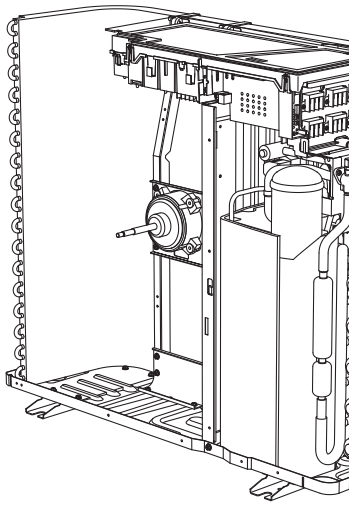 (R10414)	
1	Remove the 2 lower screws of the fan motor.	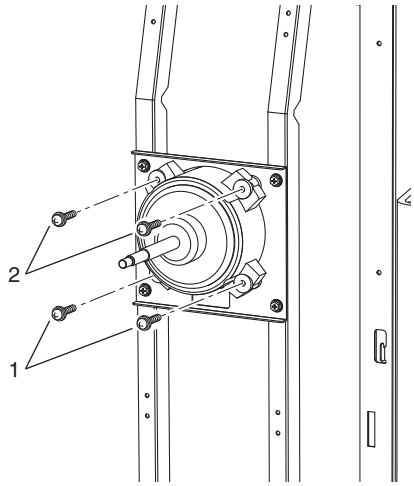 (R6442)	■ Be sure to remove the lower screws first. If the upper screws are removed first, the fan motor may tilt or fall because the center of its gravity is toward the front. It may cause injuries.
2	Remove the 2 upper screws.		
3	Remove the fan motor.	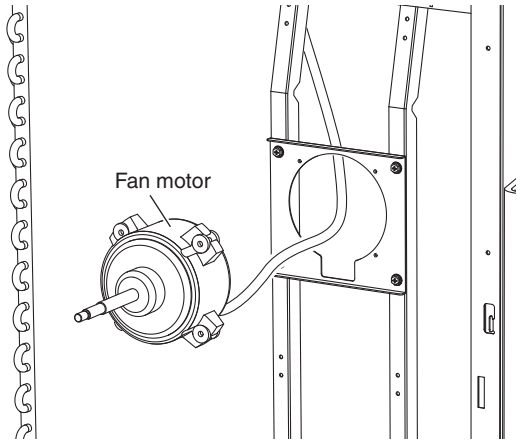 (R10542)	■ When reassembling, be sure to place the wire harness lower. 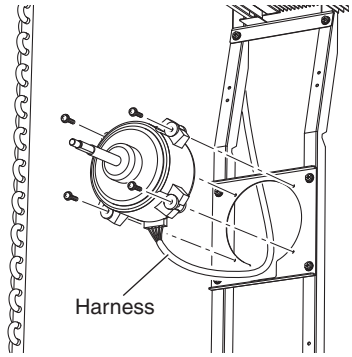 (R6444)

2.5 Removal of Coils / Thermistors

Procedure

Warning **Be sure to wait for 10 minutes or more after turning off all power supplies before disassembling work.**

Step	Procedure		Points
1. Remove the electronic expansion valve coil.			
1	Pull the electronic expansion valve coils.	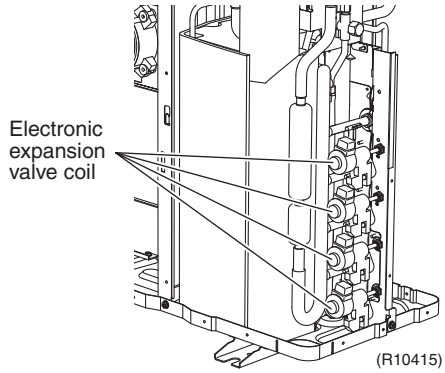 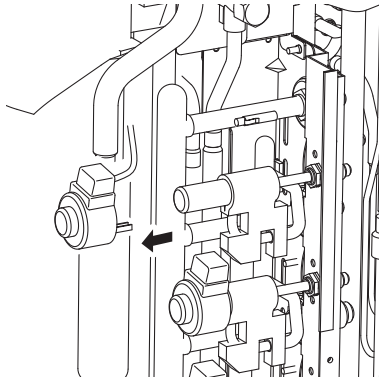	
2. Remove the thermistors.			
1	Pull out the gas pipe thermistors.	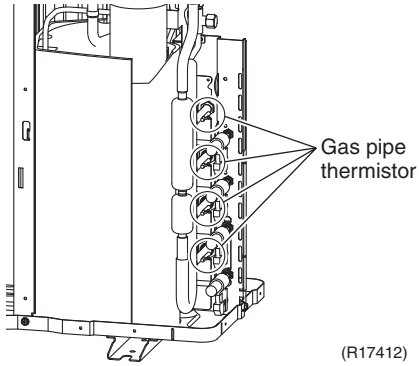 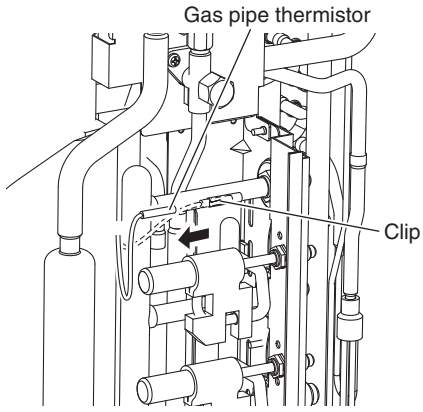	■ Place the thermistor so that its edge comes up to the edge of the fixture. ■ Be careful not to lose the clips for the thermistors.

Step	Procedure		Points
2	Peel the putty, and pull out the liquid pipe thermistors.	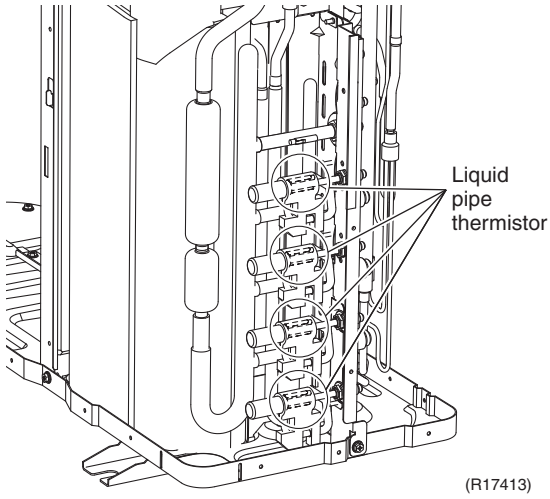 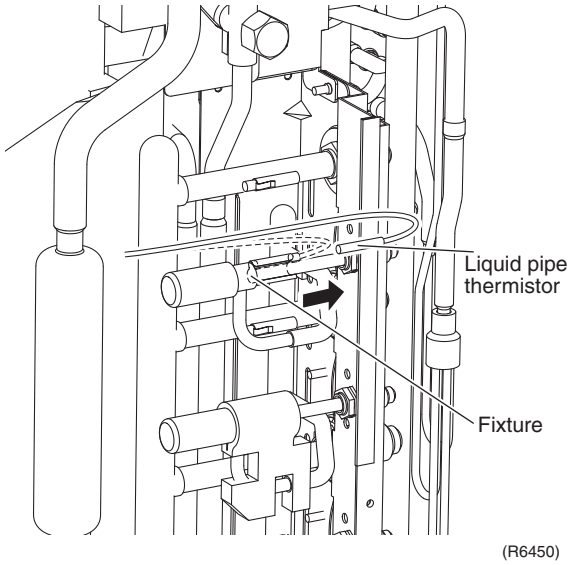	■ Be careful not to lose the fixtures for the thermistors.
3	Pull out the outdoor heat exchanger thermistor.	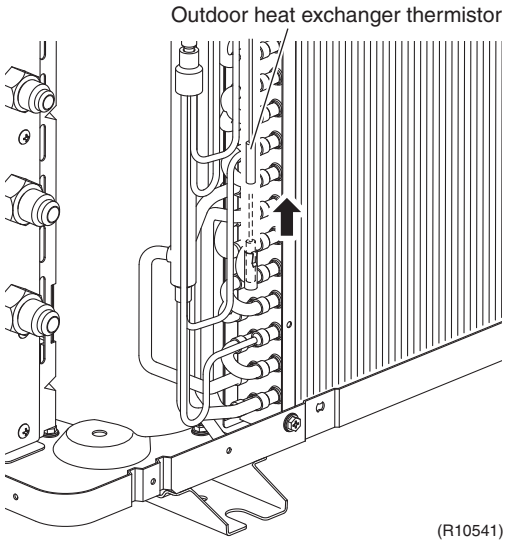	

Step	Procedure		Points
4	Remove the clip from the outdoor heat exchanger thermistor.	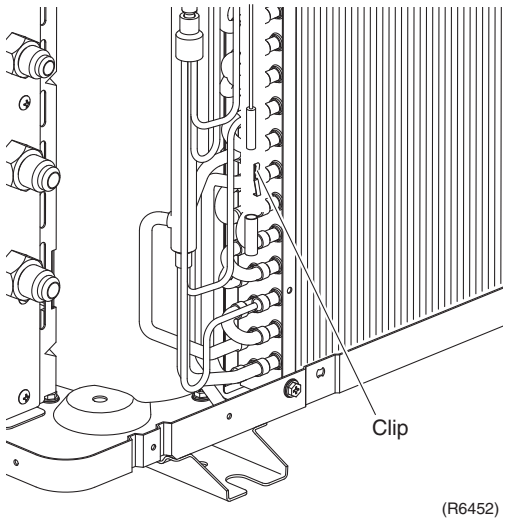	■ Be careful not to lose the clip for the thermistor.
5	Slightly open the sound blanket (outer).	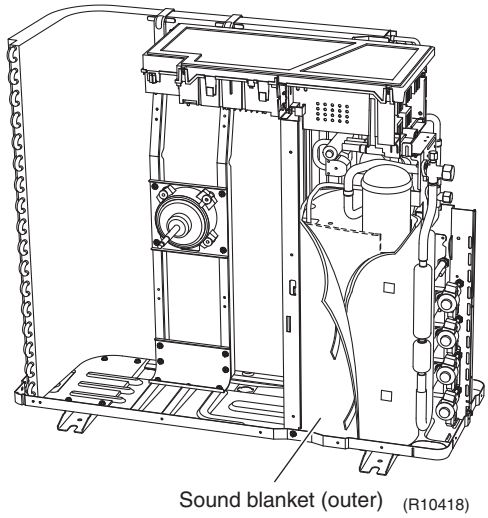	
6	Remove the sound blanket (top upper).	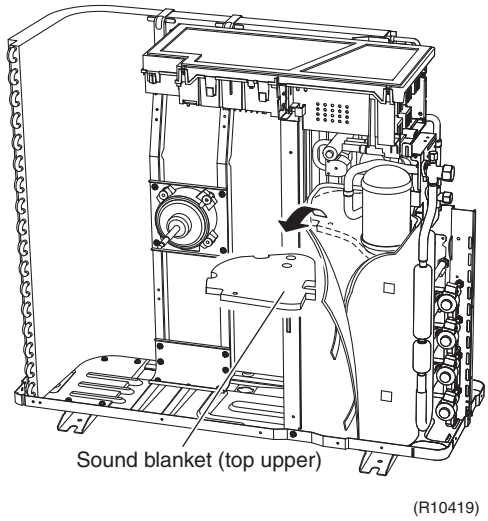	

Step	Procedure		Points
7	Remove the discharge pipe thermistor.	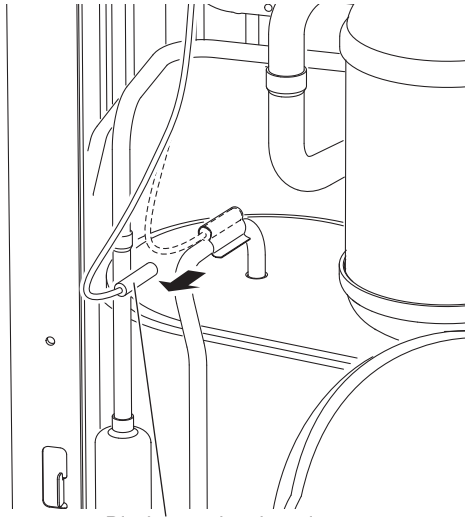	
8	Remove the fixture.	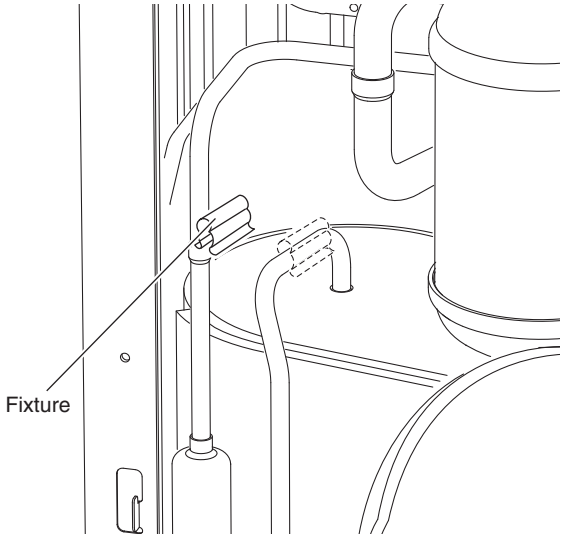	■ Be careful not to lose the fixture for the thermistor.
3. Remove the four-way valve coil.			
1	Remove the screw.	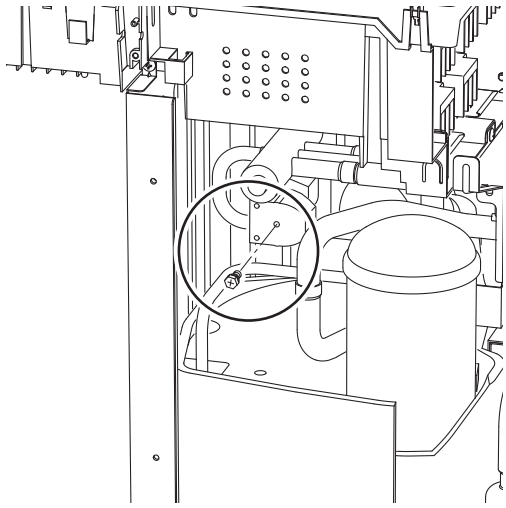	

Step	Procedure		Points
2	Remove the four-way valve coil.	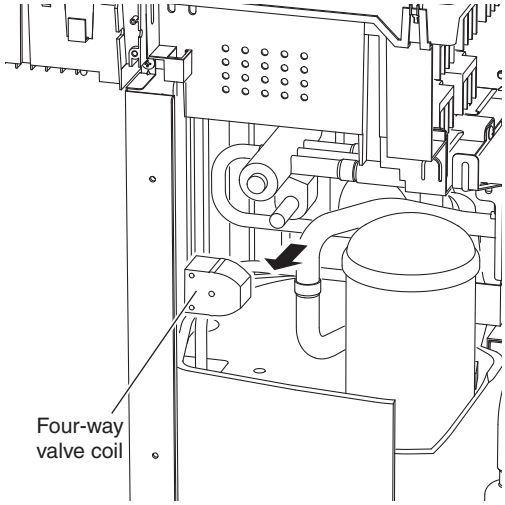 (R10432)	

2.6 Removal of Sound Blankets

Procedure

Warning **Be sure to wait for 10 minutes or more after turning off all power supplies before disassembling work.**

Step	Procedure		Points
1	Open the sound blanket (outer).	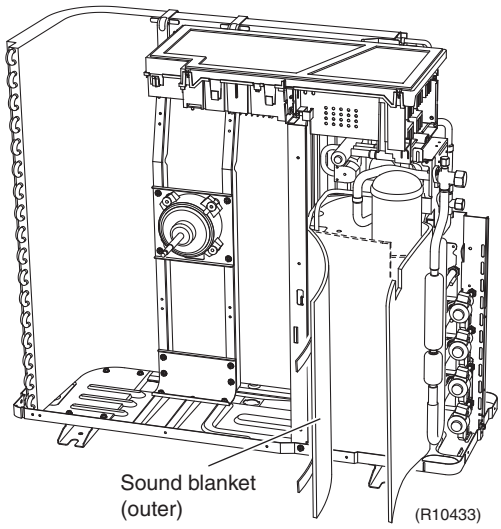	
2	Remove the sound blanket (top upper).	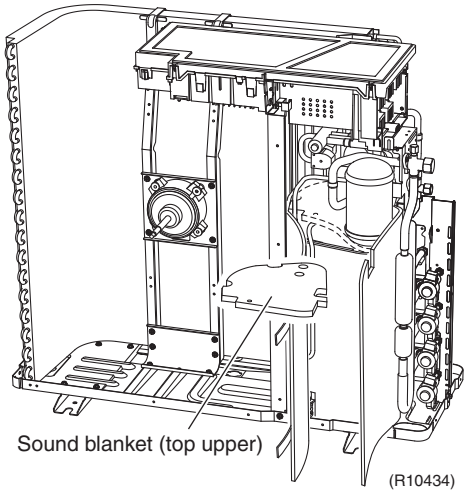	■ The sound blanket is fragile. Carefully pass the discharge pipe through it.
3	Remove the screw from the partition plate (1) and push the plate to the left slightly for easy work.	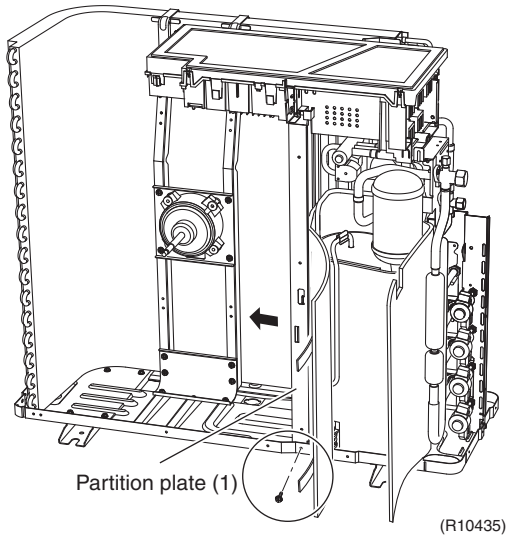	

Step	Procedure		Points
4	Remove the sound blanket (outer).	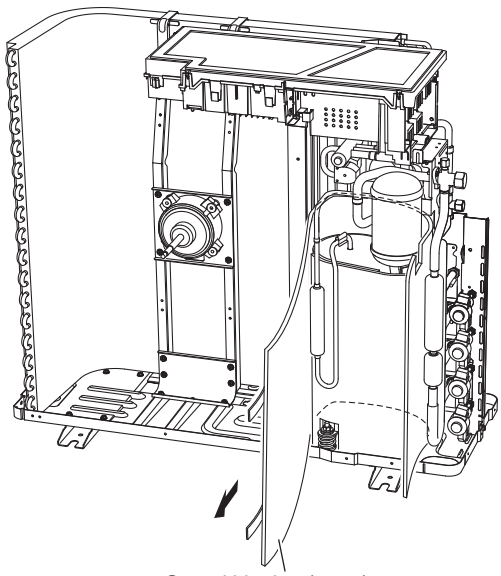	■ The sound blanket is fragile. Carefully pass the discharge pipe through it.
5	Remove the sound blanket (top inner).	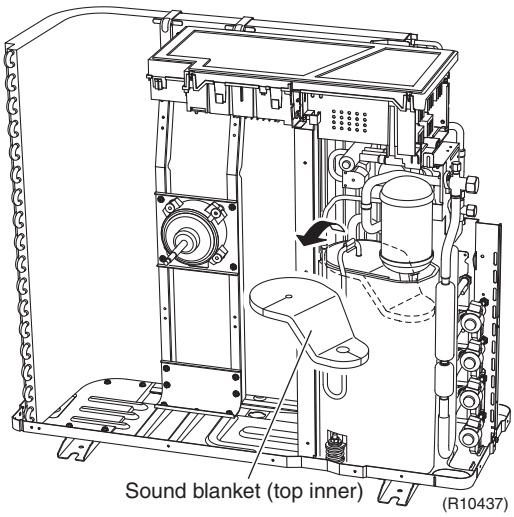	■ The sound blanket is fragile. Carefully pass the discharge pipe through it.
6	Open the sound blanket (inner) and pass it through the part of the mufflers.	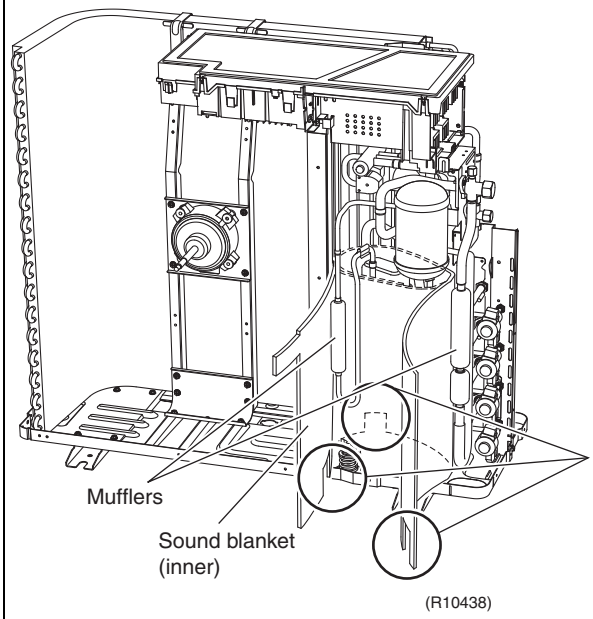	■ The sound blanket is fragile. Be careful of the notches of the compressor mount (3 locations).

Step	Procedure		Points
7	Remove the sound blanket (inner).	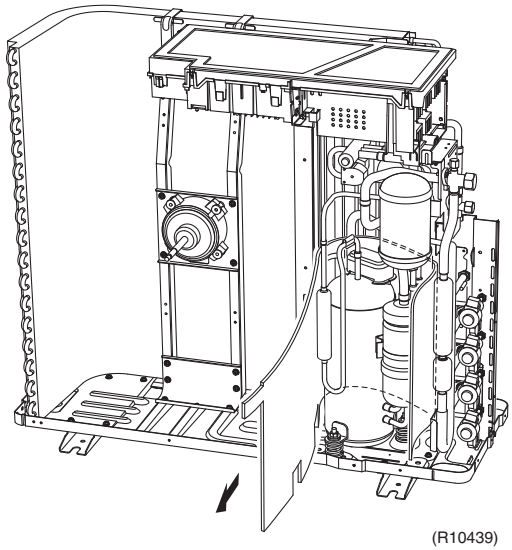 (R10439)	

2.7 Removal of Compressor

Procedure

Warning **Be sure to wait for 10 minutes or more after turning off all power supplies before disassembling work.**

Step	Procedure		Points
1	Remove the terminal cover.	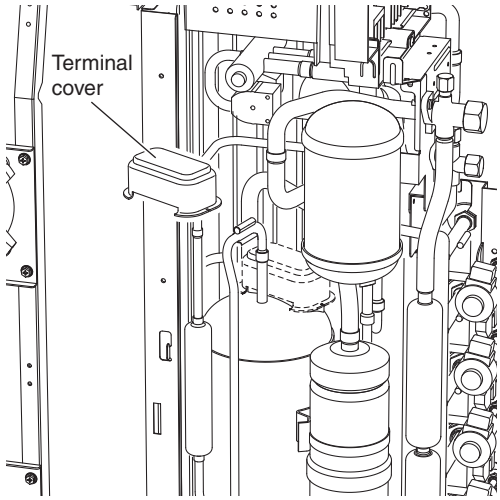 (R6466)	
2 3	Disconnect the compressor lead wires. Remove the overload protector.	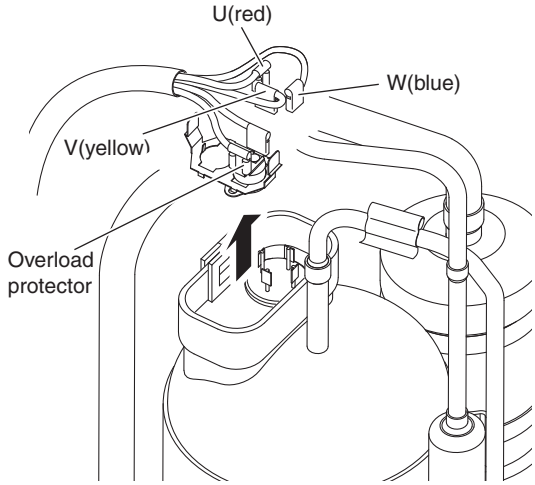 (R9471)	■ U : red, V : yellow, W : blue
4	Remove the 2 nuts.	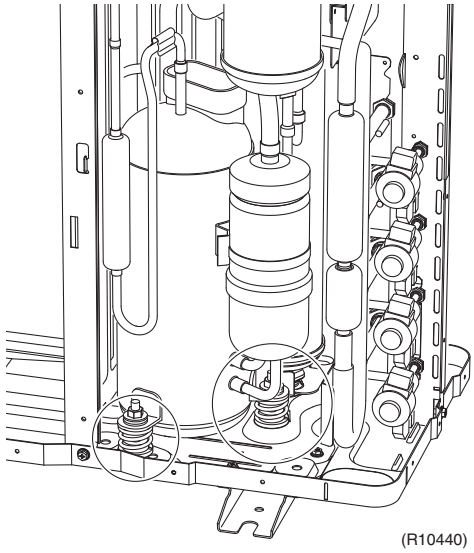 (R10440)	■ Disconnect the pipings, referring to page 221.

Part 8
Trial Operation and Field Settings

1. Pump Down Operation 255
2. Forced Operation 256
3. Wiring Error Check Function 257
4. Trial Operation 259
5. Field Settings 261
   5.1 Outdoor Unit 261
   5.2 Indoor Unit 264
6. Application of Silicon Grease to a Power Transistor and a Diode Bridge 267

1. Pump Down Operation

Outline

In order to protect the environment, be sure to conduct pump down operation when relocating or disposing the unit.

Detail

1) Remove the valve caps from the liquid stop valve and the gas stop valve.
2) Carry out forced cooling operation.
3) After 5 to 10 minutes, close the liquid stop valve with a hexagonal wrench.
4) After 2 to 3 minutes, close the gas stop valve and stop the forced cooling operation.

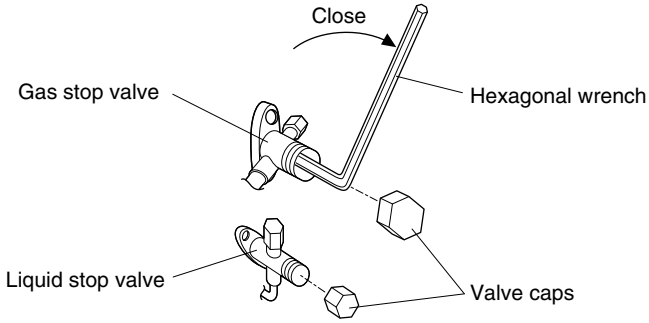

(R14566)

Refer to page 256 for forced operation.

2. Forced Operation

Outline

Forced operation mode includes forced cooling and forced heating. Operation mode can be selected by the operation mode switch (SW2) on the outdoor unit. Press the forced operation [ON/OFF] switch (SW1) on the outdoor unit to start the operation.

Detail

Item	Forced Cooling	Forced Heating
Conditions	1) The indoor unit is not abnormal, but the indoor unit which is not in the freezing prohibiting zone is present in more than 1 room.	1) The indoor unit is not abnormal. The indoor unit which is not in the peak-cut prohibited zone is present in more than 1 room.
	2) The outdoor unit is not abnormal and not in the 3-minute standby mode.	←
	3) The operating mode of the outdoor unit is the stop mode.	←
	4) The operation mode switch (SW2) on the outdoor unit is set to the cooling mode.	4) The operation mode switch (SW2) on the outdoor unit is set to the heating mode.
Start	Press the forced operation [ON/OFF] switch (SW1) on the outdoor unit.	←
Operating room	All rooms: The command is sent to all the rooms where the transmission is normal.	■ Only 1 room: The command is sent to one of the rooms which can be operate and the order of priority is A > B > C > D. Other rooms operation must be stopped.
Command frequency	• 18 class : 42 Hz • 24/32 class : 31 Hz	(Outdoor temperature : 2°C (35.6°F) • 18 class : 35 Hz • 24/32 class : 26 Hz
End	1) Press the forced operation [ON/OFF] switch (SW1) on the outdoor unit again.	←
	2) The operation ends automatically after 15 minutes.	2) The operation ends automatically after 60 minutes.
Others	The protection functions are prior to all others in the forced operation.	←

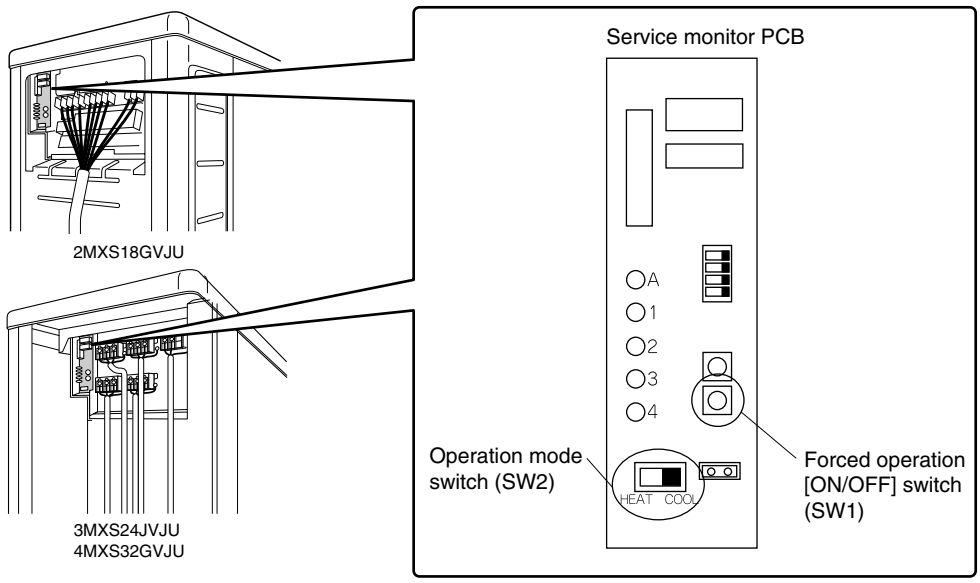

(R12870)

3. Wiring Error Check Function

Outline

The convenient wiring error check function is designed for the microcomputer to correct wiring errors itself.
If local wiring is unclear in the case of buried piping, for example, just press the wiring error check switch that is behind the stop valve cover of the outdoor unit. Even if the connections for Room A and Room B are confused, the system may run without a hassle. Note that this check function does not work in the following cases.

- For about 1 minute after the power is turned on (during initial setup).
- For 3-minute standby period after the compressor has stopped.
- When the outdoor temperature is below 5°C (41°F).
- If the indoor unit is in trouble (also in case of all-room transmission failure).

When the piping and wiring are perfect, there is no need to use this function.

Operation

1. Remove the stop valve cover.
2. Press the wiring error check switch (SW3) on the service monitor PCB of the outdoor unit, and the wiring error check function is activated.
3. In about 10 ~ 20 minutes, the check finishes automatically.
4. When the check is over, the service monitor LED indicators start blinking.

LED	1	2	3	4	Judgment
Status	All blinking at once				Self-correction impossible
	Blinking one after another				Self-correction complete

- Self-correction complete…The LED indicators 1 ~ 2 (18 class), 1 ~ 3 (24 class), or 1 ~ 4 (32 class) blink one after another.
- Self-correction impossible…The LED indicators blink all at the same time.
  - ∗ Transmission failure occurs at any of the indoor units.
  - ∗ The indoor unit heat exchanger thermistor is disconnected.
  - ∗ An indoor unit is in trouble (if a trouble occurs during the wiring error checking).
- Emergency stop…Any of the LED indicators stays on.

Note:

1. It takes about 10 ~ 20 minutes (after pressing the wiring error check switch) to complete the checking.
2. Wrongly connected liquid and gas pipes cannot be self-corrected. Be sure to make the liquid pipe and the gas pipe in pairs.
3. To cancel the wiring error check procedure halfway, press the wiring error check switch again. In this case, the memory of the microcomputer returns to its initial status (Room A wiring → Port A piping, Room B wiring → Port B piping).
4. When replacing the outdoor unit PCB, be sure to use this function.
5. Make the power side setting after doing the wiring error check. (Otherwise, if the wiring is reversed, the air-conditioners being connected are set up in the reverse way.)

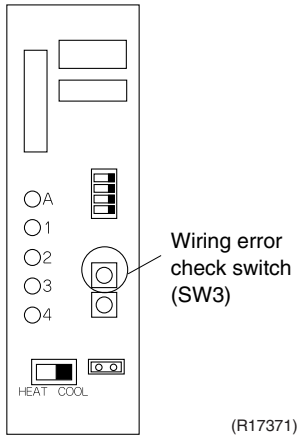

Basic Knowledge

- Refrigerant flows from Port A and on. The temperatures of the indoor heat exchanger thermistors are detected one by one to check up the matching between the piping and wiring.
- With this function on, freezing (crackling) noise may be heard from the indoor unit. This is not a problem. (This is because the heat exchanger temperature is made to drop below 0°C in order to increase the detection accuracy.)
- The indoor fan is made to turn on or off at the same time.

Checking the current setting data on the microcomputer memory

Those data can be checked by looking at the service monitor LED indicators, when the wiring error checking is over, during forced operation, at the stop of the system.
The LED indicators stop blinking when the forced operation is over.
LED1…Room A wiring, LED2…Room B wiring
1st blinking LED…Port A piping, 2nd blinking LED…Port B piping
The 1st blinking LED means the room that is connected with Port A. The 2nd blinking LED means the one connected with Port B.

Example

Ex: Suppose the LED indicators are blinking as follows.

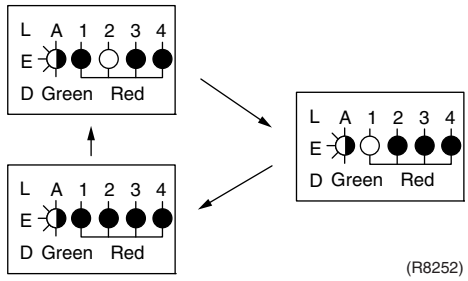

The above means that Port A is connected with Port B, and Port B with Room A (or self-corrected this way.)

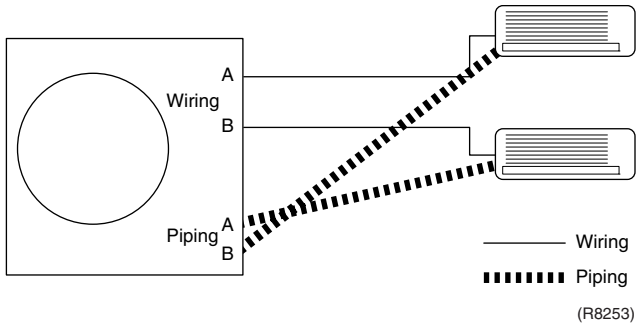

4. Trial Operation

Outline

1. Measure the power supply voltage and make sure that it falls in the specified range.
2. Trial operation should be carried out in either cooling or heating operation.
3. Carry out the trial operation in accordance with the operation manual to ensure that all functions and parts, such as louver movement, are working properly.

- The air conditioner requires a small amount of power in its standby mode. If the system is not to be used for some time after installation, shut off the circuit breaker to eliminate unnecessary power consumption.
- If the circuit breaker trips to shut off the power to the air conditioner, the system backs up the operation mode. The system then restarts operation with the previous operation mode when the circuit breaker is restored.

In cooling operation, select the lowest programmable temperature; in heating operation, select the highest programmable temperature.

- Trial operation may be disabled in either operation mode depending on the room temperature.
- After trial operation is complete, set the temperature to a normal level.
  (26 ~ 28°C (78.8 ~ 82.4°F) in cooling, 20 ~ 24°C (68 ~ 75.2°F) in heating)
- For protection, the system does not start for 3 minutes after it is turned off.

Detail

ARC452 Series

(1) Press the [ON/OFF] button to turn on the system.
(2) Press the both of [TEMP] buttons and the [MODE] button at the same time.
(3) Press the [MODE] button twice.
(7 appears on the display to indicate that trial operation is selected.)
(4) Press the [MODE] button and select the operation mode.
(5) Trial operation terminates in approx. 30 minutes and switches into normal mode. To quit a trial operation, press the [ON/OFF] button.

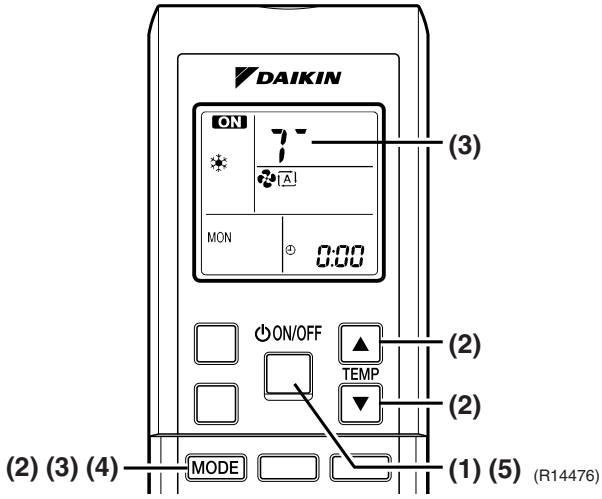

ARC433 Series

(1) Press the [ON/OFF] button to turn on the system.
(2) Press the center of the [TEMP] button and the [MODE] button at the same time.
(3) Press the [MODE] button twice.
(7- appears on the display to indicate that trial operation is selected.)
(4) Press the [MODE] button and select the operation mode.
(5) Trial operation terminates in approx. 30 minutes and switches into normal mode. To quit a trial operation, press the [ON/OFF] button.

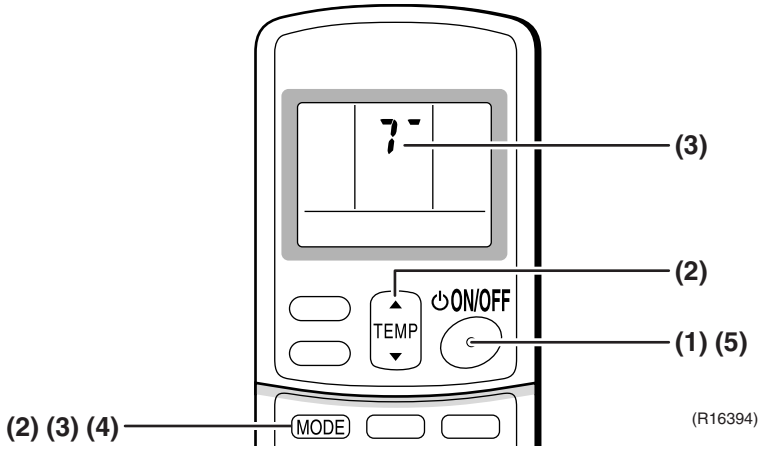

5. Field Settings

5.1 Outdoor Unit

5.1.1 Priority Room Setting

Outdoor electronic expansion valves are controlled to provide more capacity to the prioritized room.

- Setting method
  Turn off the circuit breaker before changing the setting.
  Only one room can be set as the priority room (By turning on one of the SW4 on the service monitor PCB of the outdoor unit).
- The control starts when all the following conditions are met.
  ∗ Priority room setting is made.
  ∗ “POWERFUL” signal from the priority room unit is received.

Note: The operation mode of the priority room unit has precedence.

- Cancellation of control
  The control function is canceled when the “POWERFUL” operation mode is switched off or 20 minutes elapse after “POWERFUL Operation” started.

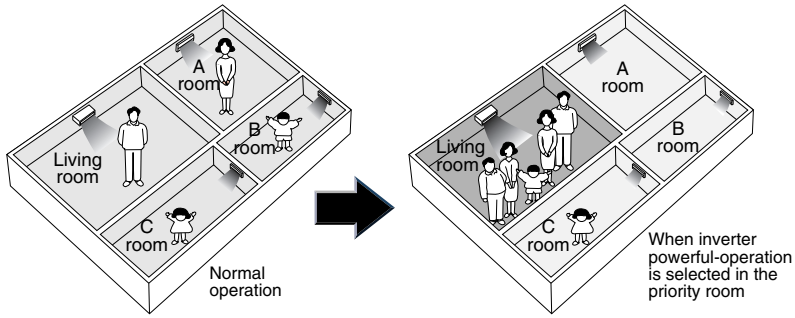

The prioritized room will be heated/cooled much more quickly

(R1396)

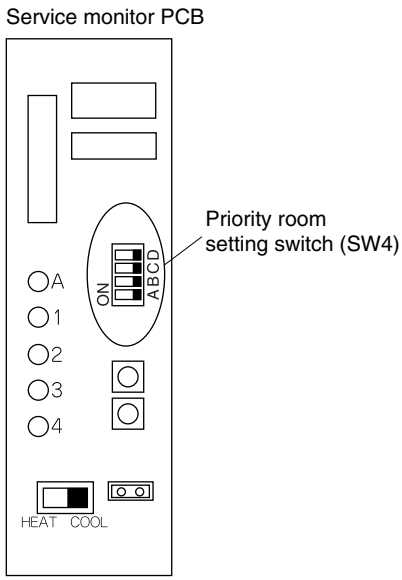

(R17373)

5.1.2 COOL / HEAT Mode Lock

Use the [S15] connector to set the unit to cooling only or heating only.
Setting to heating only (H): Short-circuit pins 1 and 3 of the connector [S15].
Setting to cooling only (C): Short-circuit pins 3 and 5 of the connector [S15].
The following specifications apply to the connector housing and pins.
JST products Housing: VHR-5N
Pin: SVH-21T-1, 1
Note that forced operation is also possible in cooling / heating mode.

∗ The illustration is for 24/32 class models as representative.

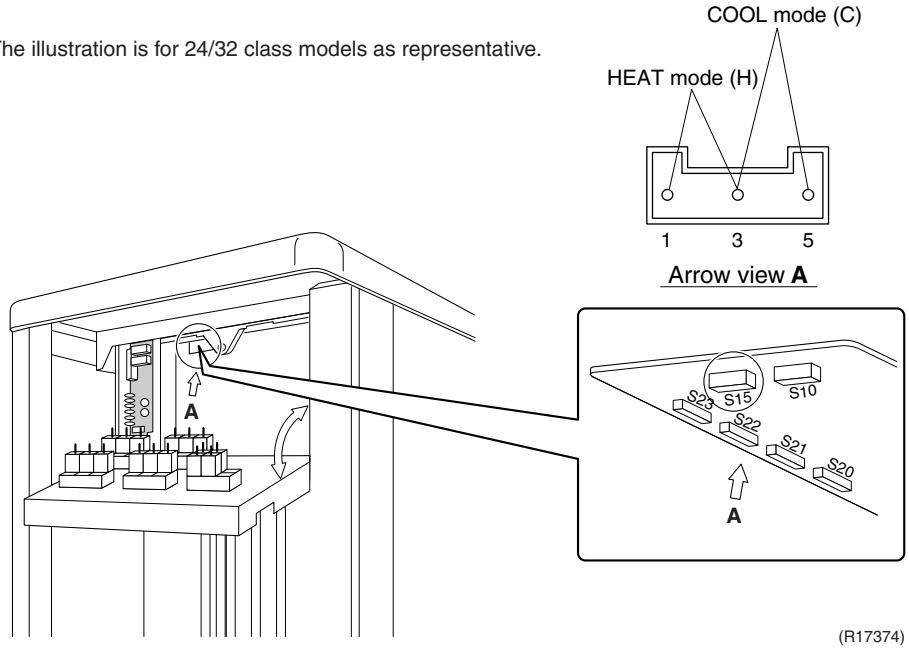

5.1.3 NIGHT QUIET Mode

If NIGHT QUIET mode is to be used, initial settings must be made when the unit is installed. Explain the function of NIGHT QUIET mode, as described below, to the customer, and confirm whether or not the customer wants to use NIGHT QUIET mode.
NIGHT QUIET mode function reduces operating noise of the outdoor unit at nighttime. This function is useful if the customer is worried about the effects of the operating noise on the neighbors. However, if NIGHT QUIET mode is running, cooling capacity is reduced.

■ Procedure

1. Remove the SW5 jumper switch on the service monitor PCB of the outdoor unit.
   Once the settings are complete, reset the power.

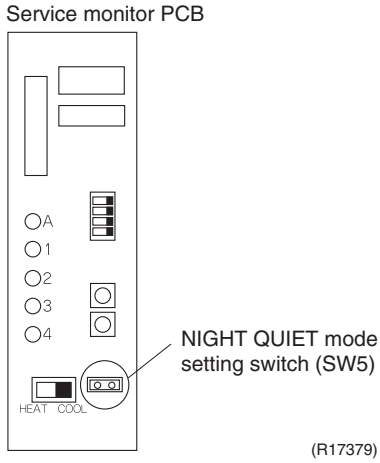

2. Install the removed jumper switch as described below. This jumper switch is needed later to disable this setting.

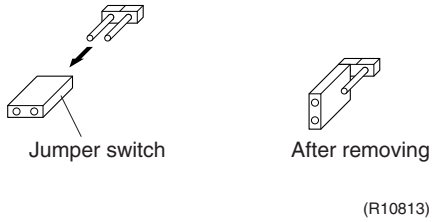

5.2 Indoor Unit

5.2.1 Model Type Setting

ARC452A21, ARC452A23

- The remote controller is common to the heat pump model and cooling only model. Use the DIP switch on the remote controller to set the model type.
- Set the DIP switch as shown in the illustration. (The factory set is the heat pump side.)
  - Heat pump model: Set the DIP switch to H/P.
  - Cooling only model: Set the DIP switch to C/O.

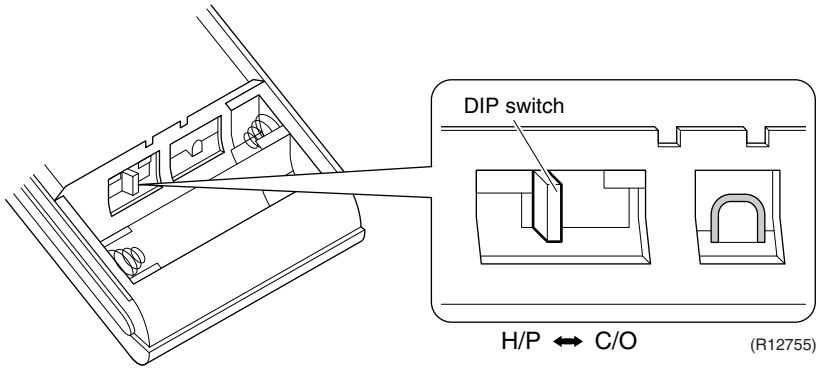

5.2.2 Temperature Display Switch

ARC452 Series

- You can select Fahrenheit or Celsius for temperature display.
- Press the TEMP▲ and ▼ buttons simultaneously for 5 seconds to change the unit of temperature display.

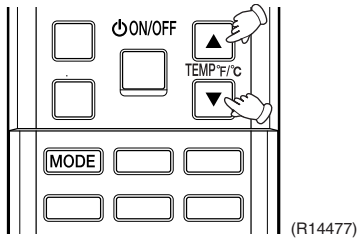

5.2.3 When 2 Units are Installed in 1 Room

Outline

When 2 indoor units are installed in 1 room, 1 of the 2 indoor units and the corresponding wireless remote controller can be set for different address.
Both the indoor unit PCB and the wireless remote controller need alteration.

The method of address setting varies depending on the type of indoor unit and the series of wired remote controller. Refer to the following pages for the appropriate indoor unit and wireless remote controller.

CTXS/FTXS Series

(1) Remove the front grille.
(2) Remove the electrical box.
(3) Remove the shield plate of the electrical box.
(4) Cut the address setting jumper JA on the PCB.

CTXS-J, CTXS/FTXS-H Series

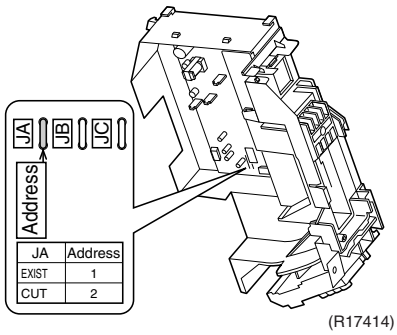

CTXS07LVJU, FTXS09/12LVJU

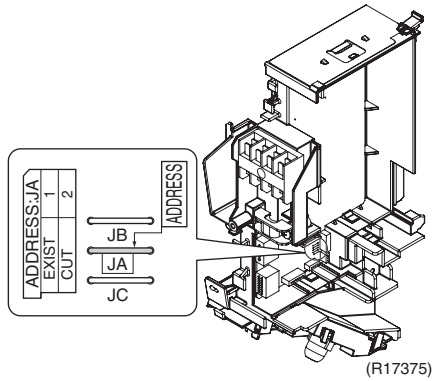

FTXS15/18LVJU

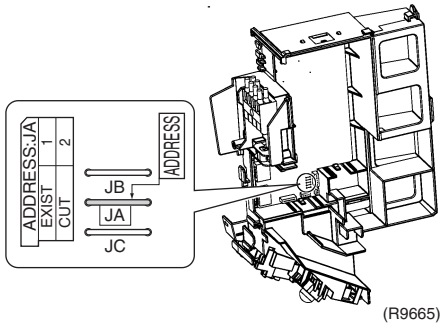

CDXS/FDXS Series

■ Cut the jumper JA on PCB.

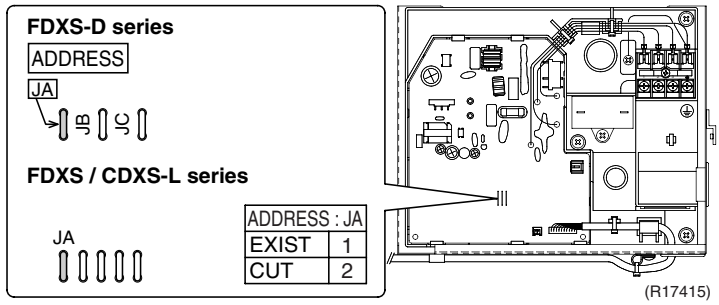

Wireless Remote Controller

(1) Remove the cover and take it off.
(2) Cut the address setting jumper.

ARC452 series

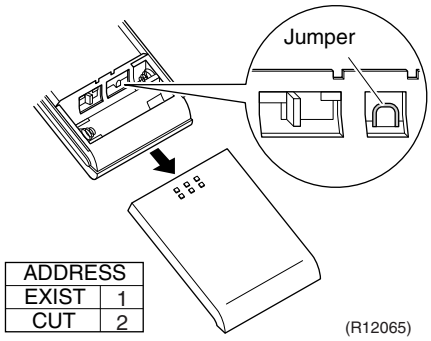

ARC433 series

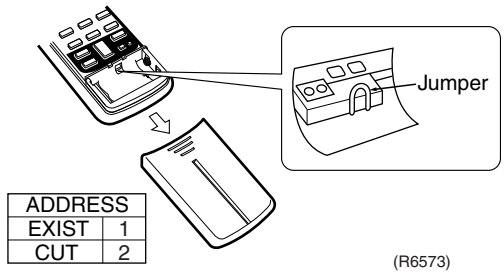

5.2.4 Jumper Settings

Jumper (on indoor unit PCB)	Function	When connected (factory set)	When cut
JB	Fan speed setting when compressor stops for thermostat OFF. (effective only at cooling operation)	Fan speed setting ; Remote controller setting	Fan speed setting; “0” (The fan stops.)
JC	Power failure recovery function	Auto-restart	The unit does not resume operation after recovering from a power failure. Timer settings are cleared.

For the location of the jumper, refer to the following pages.
CTXS/FTXS series: page 18, 20, 23
CDXS/FDXS series: page 26, 28

6. Application of Silicon Grease to a Power Transistor and a Diode Bridge

Applicable Models

All outdoor units using inverter type compressor for room air conditioner.

When the printed circuit board (PCB) of an outdoor unit is replaced, it is required that silicon grease (∗1) is certainly applied to the heat radiation part (the contact point to the radiation fin) of the power transistor and diode bridge.

∗1: Parts number of the silicon grease – 1172698 (Drawing number 3FB03758-1)

Details

The silicon grease is an essential article for encouraging the heat radiation of the power transistor and the diode bridge. Applying the paste should be implemented in accordance with the following instruction.

Note: There is the possibility of failure with smoke in case of bad heat radiation.

- Wipe off the old silicon grease completely on a radiation fin.
- Apply the silicon grease evenly to the whole.
- Do not leave any foreign objects, such as solder or paper waste, between the power transistor and the radiation fin, and also the diode bridge, and the radiation fin.
- Tighten the screws of the power transistor and the diode bridge, and contact to the radiation fin without any gap.

<Example>

The shape of electrical box and PCB vary depending on the model.

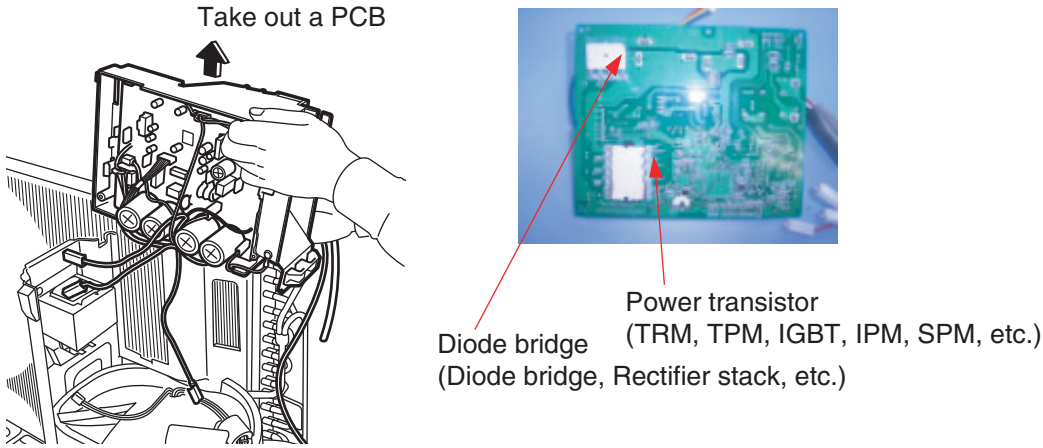

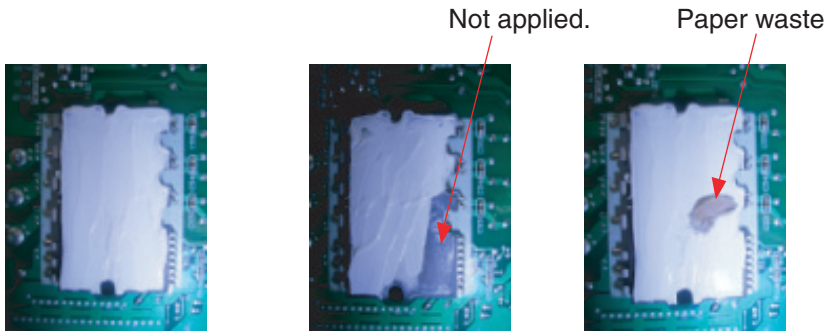

OK : Evenly applied silicon grease. **NG : Not evenly applied** **NG : Foreign object**

(R9056)

Part 9
Appendix

1. Piping Diagrams 269
   1.1 Indoor Unit 269
   1.2 Outdoor Unit 271
2. Wiring Diagrams 273
   2.1 Indoor Unit 273
   2.2 Outdoor Unit 276

1. Piping Diagrams

1.1 Indoor Unit

CTXS07JVJU, CTXS09/12HVJU

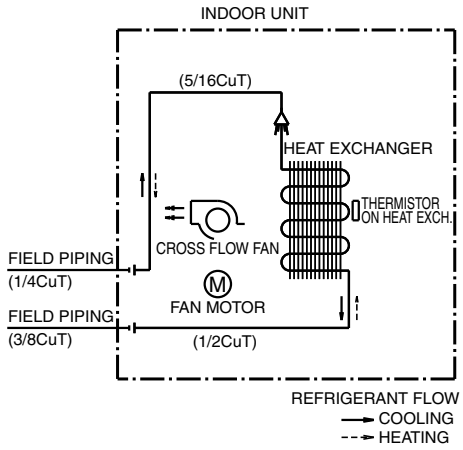

4D048251C

FTXS15/18HVJU

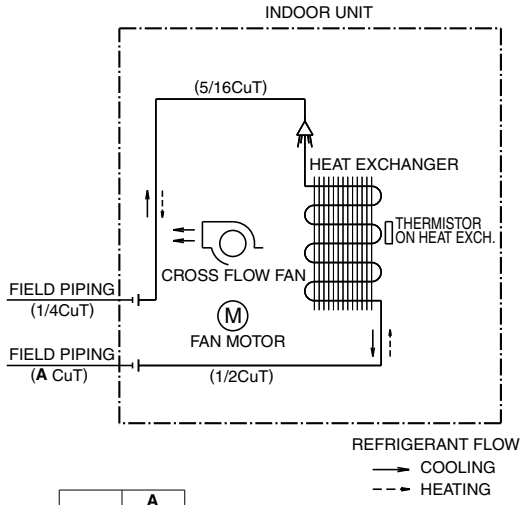

	A
FTXS15 FTXS18	1/2
FTXS24	5/8

4D047162A

CTXS07LVJU, FTXS09/12LVJU

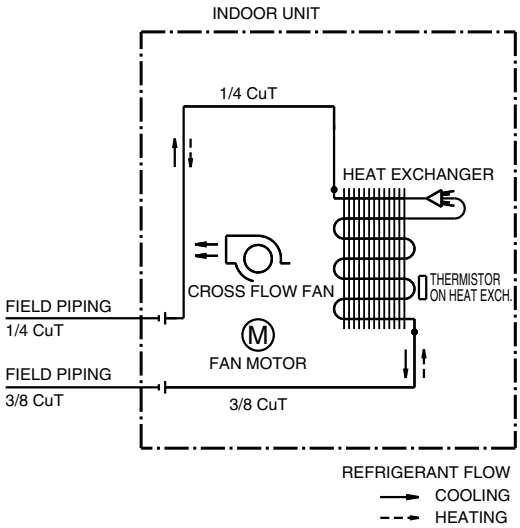

4D074606

FTXS15/18LVJU

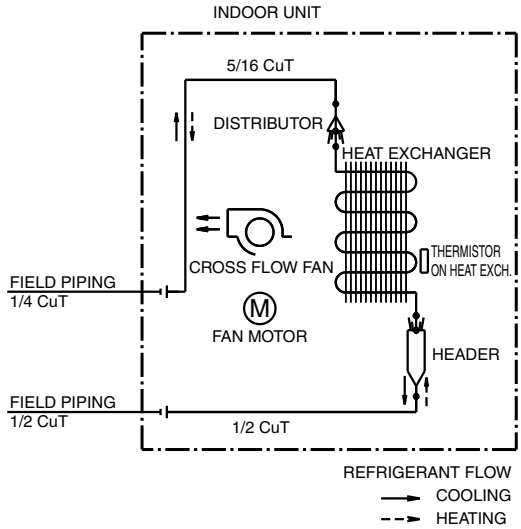

4D074609

FDXS09/12DVJU

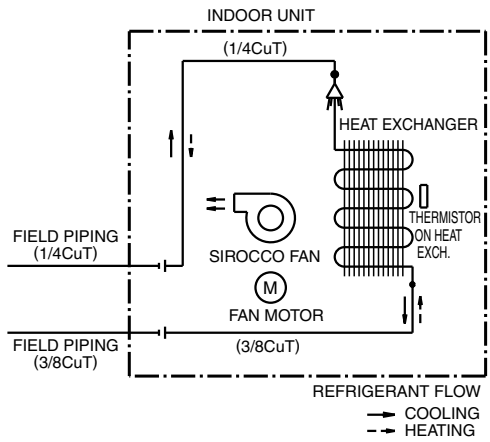

4D051787

FDXS09/12LVJU

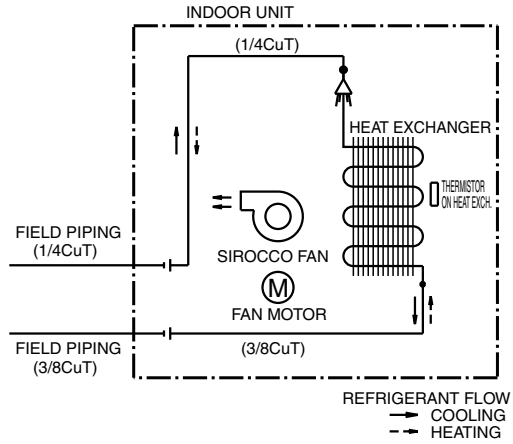

4D074621

CDXS15/18LVJU

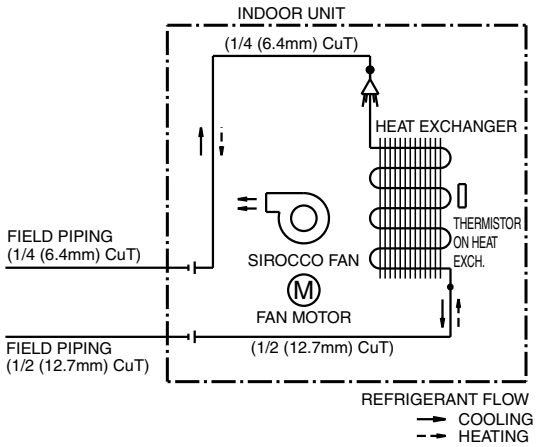

4D075271

1.2 Outdoor Unit

2MXS18GVJU

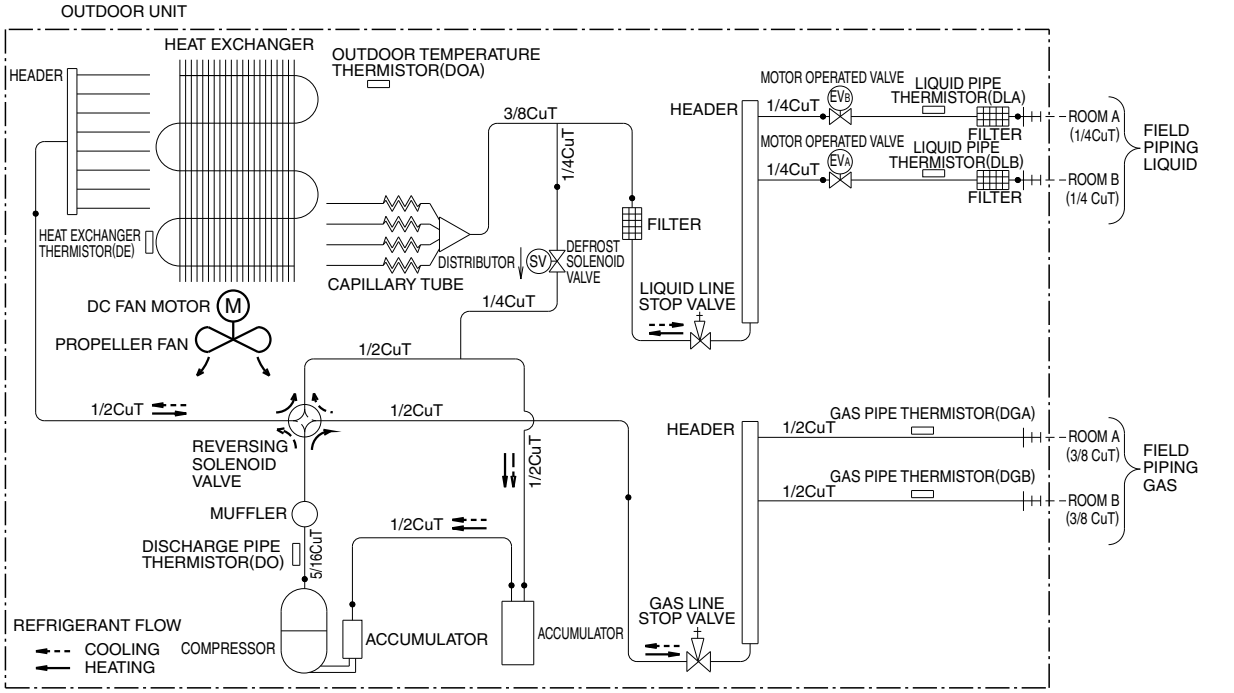

3D048177A

3MXS24JVJU

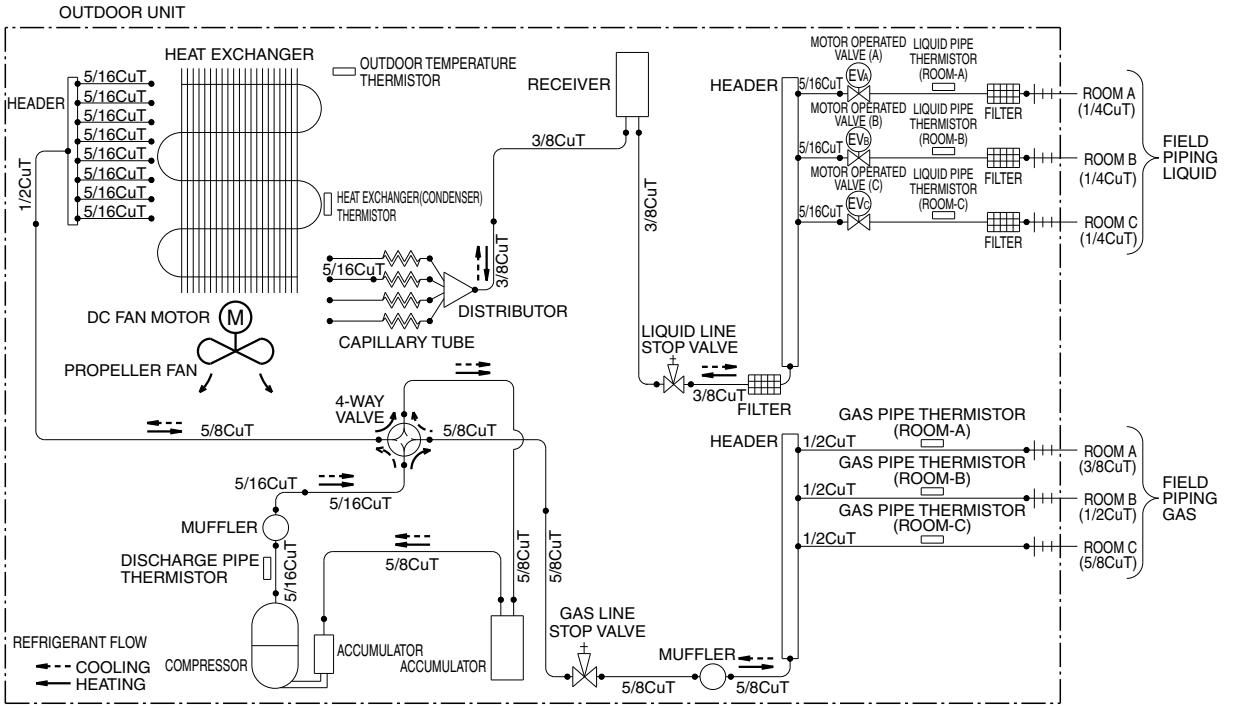

3D066157

4MXS32GVJU

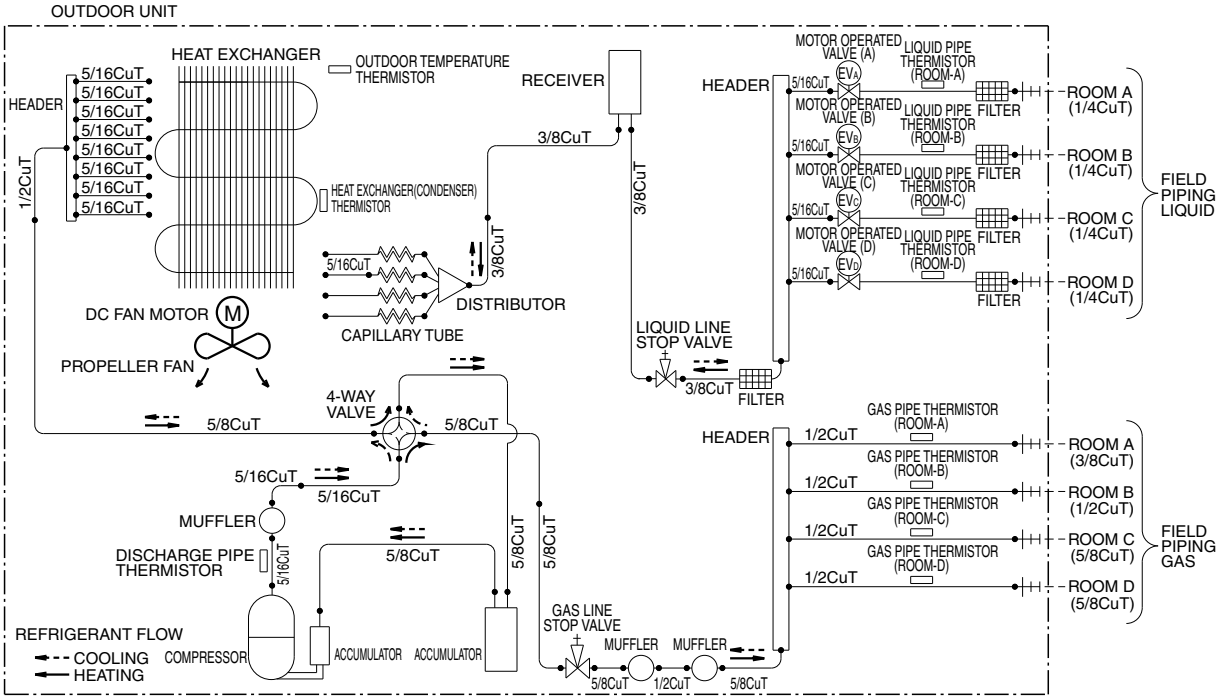

3D058508

2. Wiring Diagrams

2.1 Indoor Unit

CTXS07JVJU, CTXS09/12HVJU

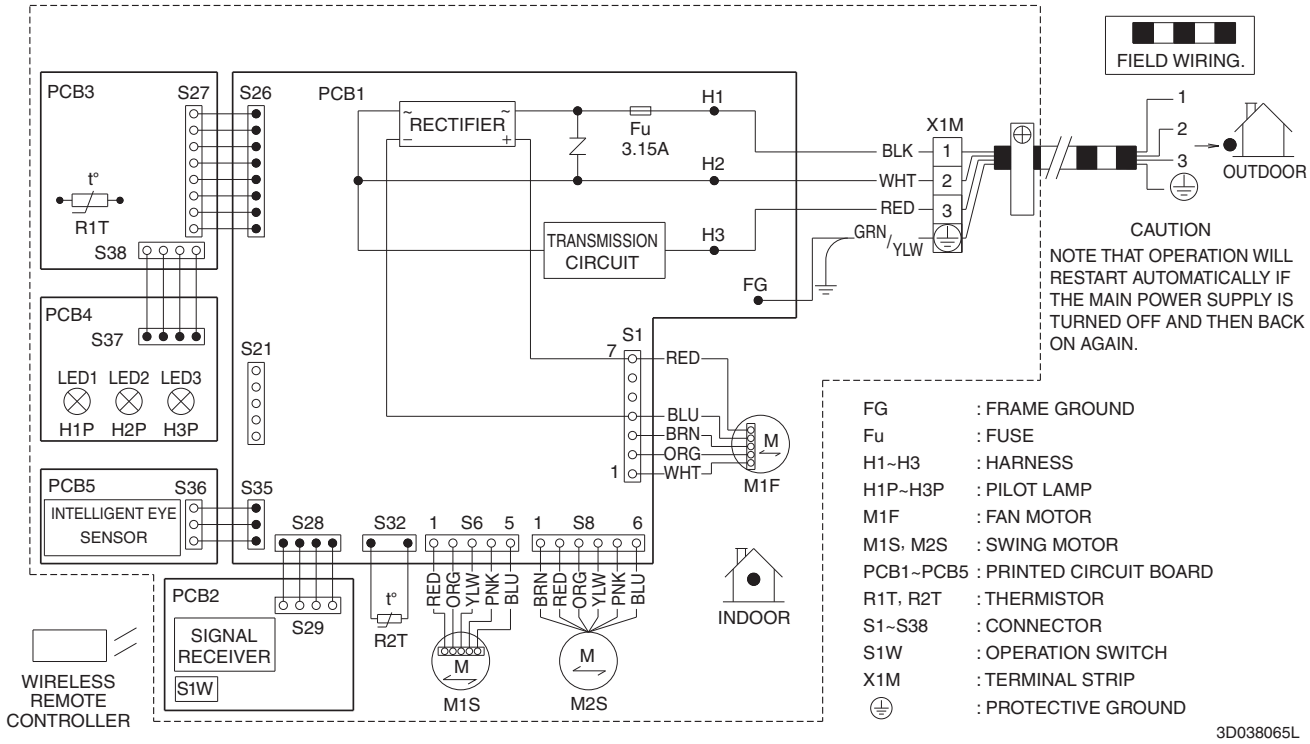

FTXS15/18HVJU

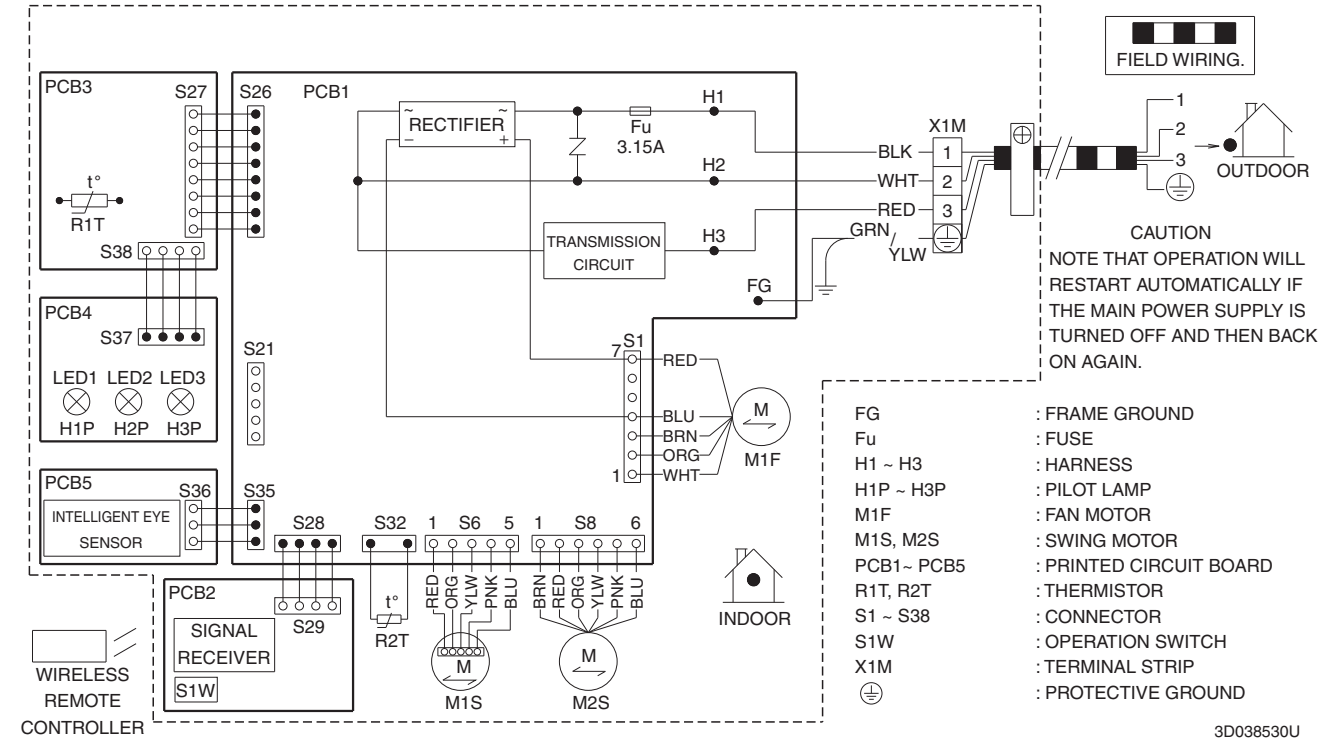

CTXS07LVJU, FTXS09/12LVJU

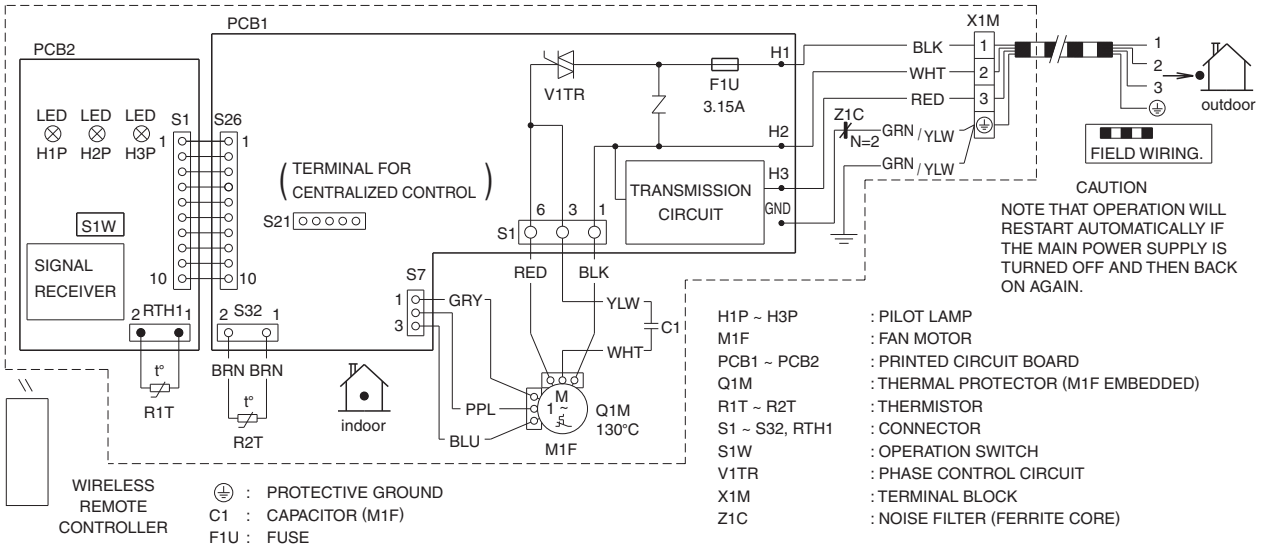

FTXS15/18LVJU

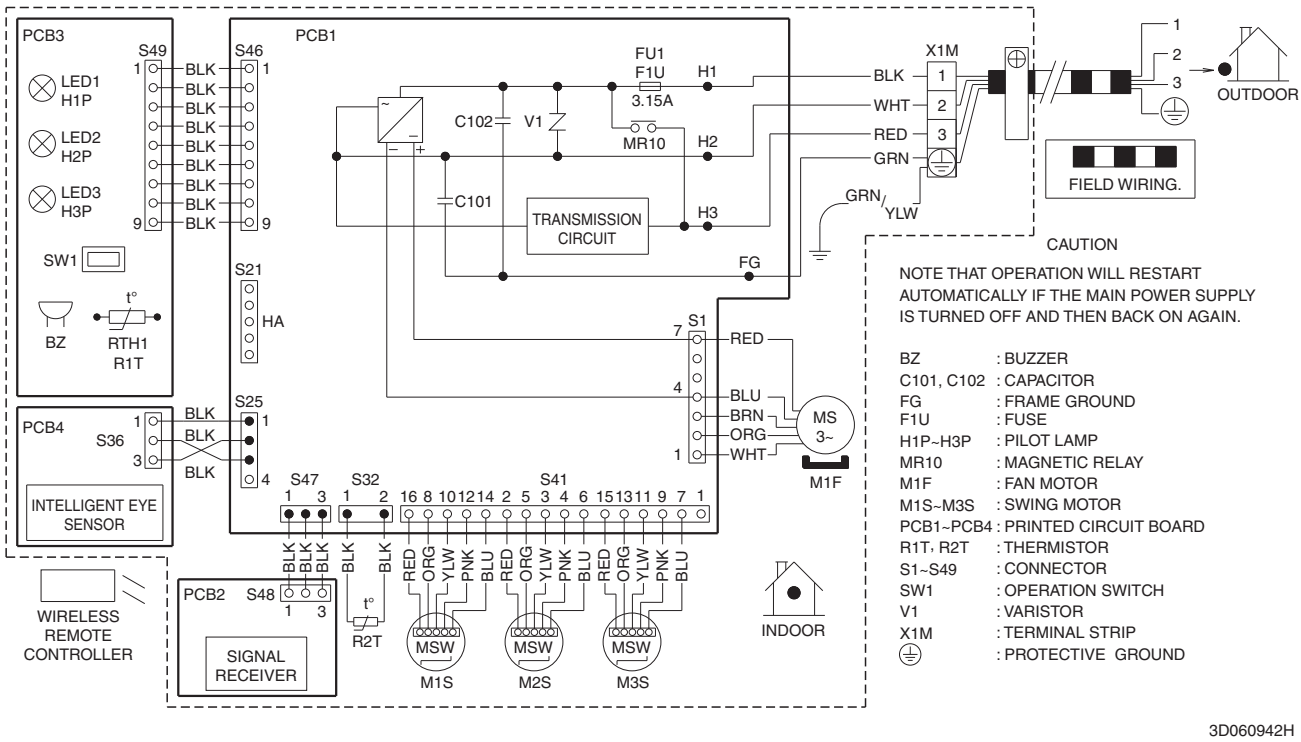

FDXS09/12DVJU

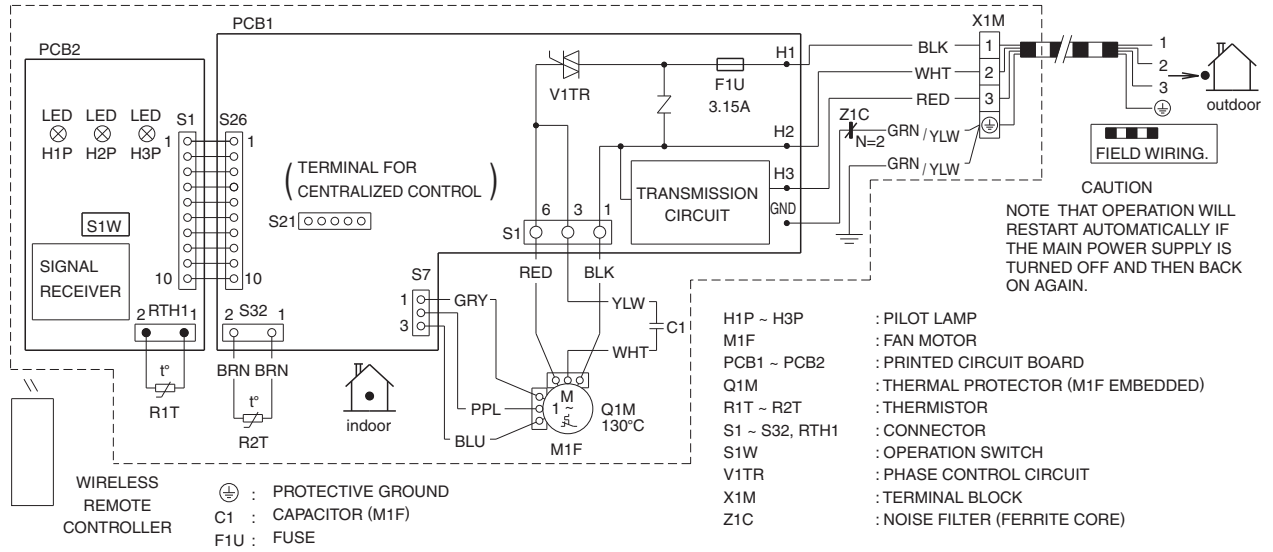

FDXS09/12LVJU, CDXS15/18LVJU

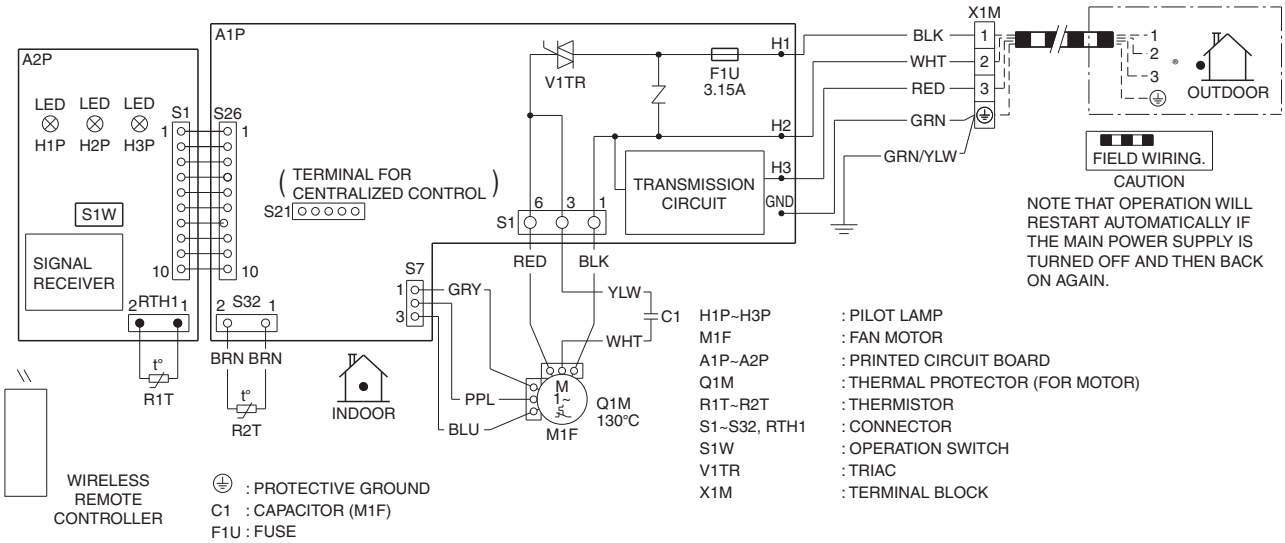

2.2 Outdoor Unit

2MXS18GVJU

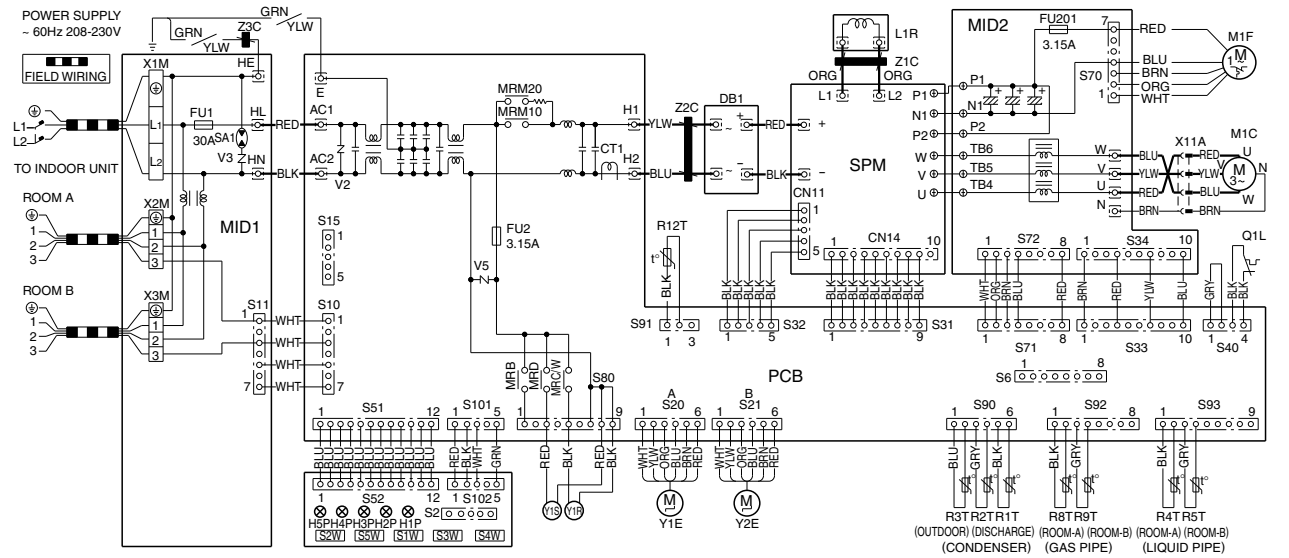

Z1C~Z3C : FERRITE CORE
X1M~X3M : TERMINAL STRIP
Y1E~Y2E : ELECTRONIC EXPANSION VALVE COIL
V2~V5 : VARISTOR
FU1, FU2. FU201 : FUSE
HE, HL, HN
E, AC1, AC2
H1, H2, L1
L2, : CONNECTOR
MRM10, MRM20
MRB, MRD
MRC/W : MAGNETIC RELAY
R1T~R12T : THERMISTOR
S2~S102 : CONNECTOR
H1P~H5P : PILOT LAMP
L1, L2 : LIVE

S1W : FORCED OPERATION ON/OFF SW (SW1)
S2W : FORCED OPERATION MODE SELECT SW (SW2)
S3W : WIRING ERROR CHECK SW (SW3)
S4W : PRIORITY ROOM SETTING SW (SW4)
S5W : NIGHT QUIET MODE SETTING SW (SW5)
SA1 : SURGE ARRESTER
Y1R : REVERSING SOLENOID VALVE COIL
Y1S : DEFROST SOLENOID VALVE COIL
PCB : PRINTED CIRCUIT BOARD
DB1 : DIODE BRIDGE
M1C : COMPRESSOR MOTOR
M1F : FAN MOTOR
L1R : REACTOR
Q1L : OVERLOAD PROTECTOR
CT1 : CURRENT TRANSFORMER

MID1~MID2 : MOLDED INTER CONNECT DEVICE
SPM : SYSTEM POWER MODULE

3MXS24JVJU

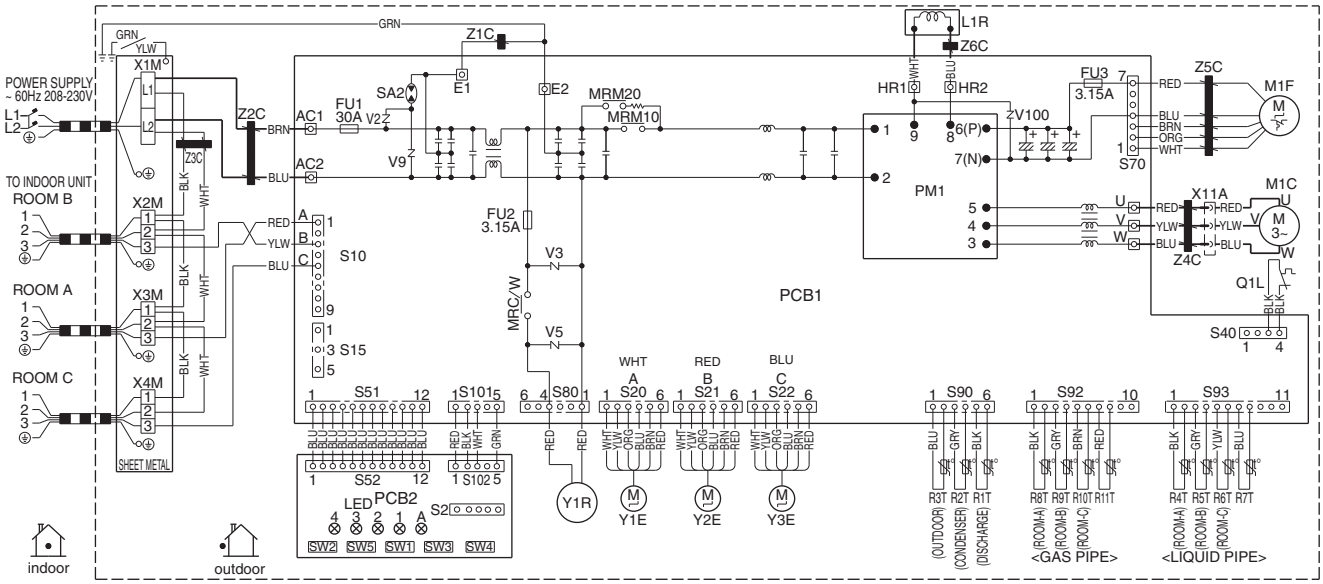

Z1C~Z6C : FERRITE CORE
X1M~X4M : TERMINAL STRIP
Y1E~Y3E : ELECTRONIC EXPANSION VALVE COIL
V2, V3, V5, V9, V100 : VARISTOR
SA2 : SURGE ARRESTER
FU1, FU2, FU3 : FUSE
AC1, AC2
U, V, W, X11A
E1, E2
HR1, HR2 : CONNECTOR

MRM10, MRM20
MRC/W : MAGNETIC RELAY
R1T~R3T
R4T~R7T
R8T~R11T : THERMISTOR
S2~S102 : CONNECTOR
LED1~LED4
LEDA : PILOT LAMP

L1, L2 : LIVE
SW1 : FORCED OPERATION ON/OFF SW (SW1)
SW2 : SELECT SW (SW2)
SW3 : WIRING ERROR CHECK SW (SW3)
SW4 : PRIORITY ROOM SETTING SW (SW4)
SW5 : NIGHT QUIET MODE SETTING SW (SW5)

M1C : COMPRESSOR MOTOR
M1F : FAN MOTOR
L1R : REACTOR
Q1L : OVERLOAD PROTECTOR
PM1 : POWER MODULE
PCB1, 2 : PRINTED CIRCUIT BOARD
Y1R : FOUR-WAY VALVE COIL
SHEET METAL : TERMINAL STRIP FIXED PLATE

4MXS32GVJU

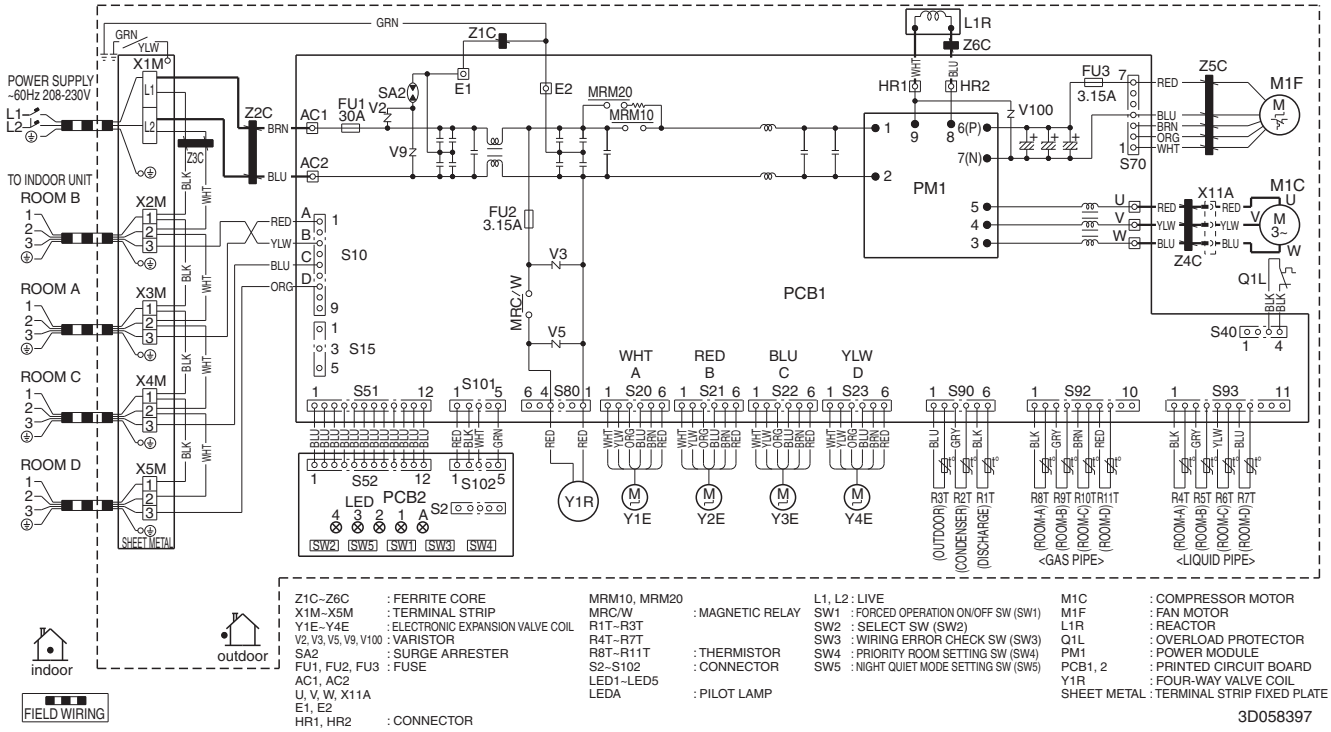
POWER SUPPLY ~60Hz 208-230V
TO INDOOR UNIT
ROOM B
ROOM A
ROOM C
ROOM D
X1M
X2M
X3M
X4M
X5M
SHEET METAL
Z1C
Z2C
Z3C
Z4C
Z5C
Z6C
L1R
FU1 30A
FU2 3.15A
FU3 3.15A
SA2
V2
V9
V3
V5
V100
E1
E2
MRM20
MRM10
AC1
AC2
MRC/W
HR1
HR2
PM1
PCB1
S10
S15
S51
S52
S101
S102
S80
S20
S21
S22
S23
S90
S92
S93
S70
S40
X11A
M1F
M1C
Q1L
PCB2
LED
S2
SW2
SW5
SW1
SW3
SW4
Y1R
Y1E
Y2E
Y3E
Y4E
(OUTDOOR)
(CONDENSER)
(DISCHARGE)
(ROOM-A)
(ROOM-B)
(ROOM-C)
(ROOM-D)
<GAS PIPE>
<LIQUID PIPE>
indoor
outdoor
FIELD WIRING
Z1C~Z6C : FERRITE CORE
X1M~X5M : TERMINAL STRIP
Y1E~Y4E : ELECTRONIC EXPANSION VALVE COIL
V2, V3, V5, V9, V100 : VARISTOR
SA2 : SURGE ARRESTER
FU1, FU2, FU3 : FUSE
AC1, AC2
U, V, W, X11A
E1, E2
HR1, HR2 : CONNECTOR
MRM10, MRM20
MRC/W : MAGNETIC RELAY
R1T~R3T
R4T~R7T
R8T~R11T : THERMISTOR
S2~S102 : CONNECTOR
LED1~LED5
LEDA : PILOT LAMP
L1, L2 : LIVE
SW1 : FORCED OPERATION ON/OFF SW (SW1)
SW2 : SELECT SW (SW2)
SW3 : WIRING ERROR CHECK SW (SW3)
SW4 : PRIORITY ROOM SETTING SW (SW4)
SW5 : NIGHT QUIET MODE SETTING SW (SW5)
M1C : COMPRESSOR MOTOR
M1F : FAN MOTOR
L1R : REACTOR
Q1L : OVERLOAD PROTECTOR
PM1 : POWER MODULE
PCB1, 2 : PRINTED CIRCUIT BOARD
Y1R : FOUR-WAY VALVE COIL
SHEET METAL : TERMINAL STRIP FIXED PLATE
3D058397