DAIKIN TECHNICAL MANUAL

DD80HS 33-3/8" Gas Furnace 80% AFUE, 2-Stage (Convertible), Multi-Speed, Dedicated Downflow

- Refer to Service Manual RSD6621005 for troubleshooting information.
- Refer to the appropriate Parts Catalog for part number information.
- Model numbers listed on page 3.

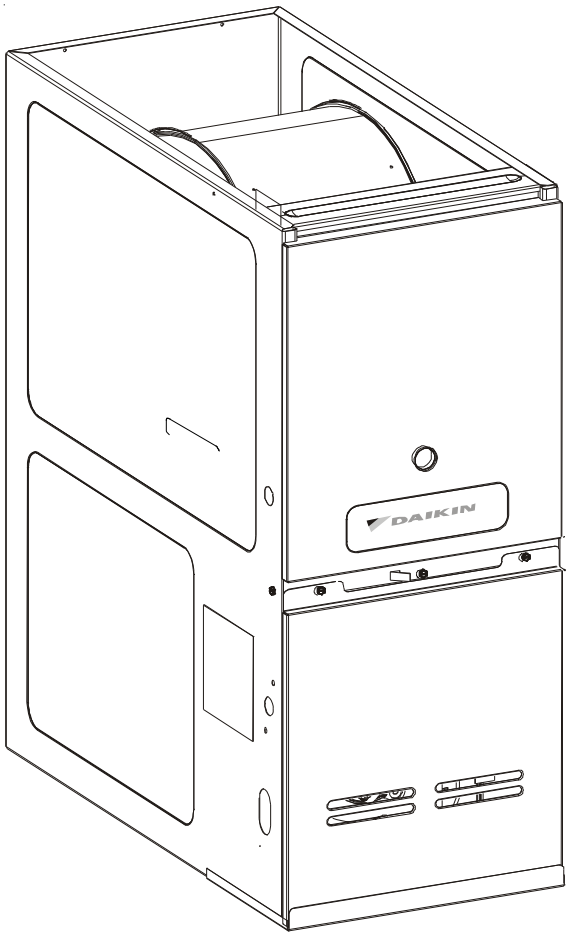

Intertek

This manual is to be used by qualified, professionally trained HVAC technicians only.
Daikin does not assume any responsibility for property damage or personal injury due to improper service procedures or services performed by an unqualified person.

RTD6621022r1
December 2013

Copyright © 2013 DAIKIN MANUFACTURING COMPANY, L.P.

PRODUCT IDENTIFICATION

The model and manufacturing number are used for positive identification of component parts used in manufacturing. Please use these numbers when requesting service or parts information.

D	D	8	0	H	S	0	6	0	3	B	N	A	A
1	2	3	4	5	6	7	8	9	10	11	12	13	14

Brand
- D - Daikin

Configuration
- M - Upflow/Horizontal
- C - Downflow/Horizontal
- K - Dedicated Upflow
- D - Dedicated Downflow

AFUE
- 97 - 97% AFUE
- 80 - 80% AFUE

Gas Valve
- M - Modulating
- V - 2 Stage
- H - Convertible 2 Stage
- S - Single Stage

Motor
- C - Variable Speed/ComfortNet
- E - High Efficiency
- S - Single Speed

MBTU/h
- 40 - 40,000
- 60 - 60,000
- 80 - 80,000
- 100 - 100,000
- 120 - 120,000

Minor Revision
- A - Initial Release
- B - 1st Revision

Major Revision
- A - Initial Release
- B - 1st Revision

Nox
- N - Natural Gas
- X - Low NOx

Cabinet Width
- A - 14"
- B - 17.5"
- C - 21"
- D - 24.5"

Maximum CFM
- 3 - 1200 CFM
- 4 - 1600 CFM
- 5 - 2000 CFM

⚠ WARNING

HIGH VOLTAGE!

Disconnect ALL power before servicing or installing this unit. Multiple power sources may be present. Failure to do so may cause property damage, personal injury or death.

⚠ WARNING **Daikin will not be responsible for any injury or property damage arising from improper service or service procedures. If you install or perform service on this unit, you assume responsibility for any personal injury or property damage which may result. Many jurisdictions require a license to install or service heating and air conditioning equipment.**

⚠ WARNING **Installation and repair of this unit should be performed ONLY by individuals meeting the requirements of an "entry level technician", at a minimum, as specified by the Air-Conditioning, Heating, and Refrigeration Institute (AHRI). Attempting to install or repair this unit without such background may result in product damage, personal injury or death.**

PRODUCT IDENTIFICATION

The model and manufacturing number are used for positive identification of component parts used in manufacturing. Please use these numbers when requesting service or parts information.

DD80HS0403AXAA

DD80HS0603AXAA

DD80HS0804BXAA

DD80HS1005CXAA

WARNING **The United States Environmental Protection Agency ("EPA") has issued various regulations regarding the introduction and disposal of refrigerants introduced into this unit. Failure to follow these regulations may harm the environment and can lead to the imposition of substantial fines. These regulations may vary by jurisdiction. Should questions arise, contact your local EPA office.**

WARNING **Do not connect or use any device that is not design certified by Daikin for use with this unit. Serious property damage, personal injury, reduced unit performance and/or hazardous conditions may result from the use of such non-approved devices.**

WARNING **To prevent the risk of property damage, personal injury, or death, do not store combustible materials or use gasoline or other flammable liquids or vapors in the vicinity of this appliance.**

PRODUCT DESIGN

General Operation

The DD80HS furnaces are equipped with an electronic ignition device used to light the burners and an induced draft blower to exhaust combustion products.

An interlock switch prevents furnace operation if the inner blower door is not in place. Keep the blower access door in place except for inspection and maintenance. *(See illustration on page 5.)*

This furnace is also equipped with a self-diagnosing electronic control module. In the event a furnace component is not operating properly, the control module LED will flash on and off in a factory-programmed sequence, depending on the problem encountered. This light can be viewed through the observation window in the blower access door. Refer to the *Troubleshooting Chart* for further explanation of the LED codes and *Abnormal Operation - Integrated Ignition Control* section in the Service Instructions for an explanation of the possible problem.

The rated heating capacity of the furnace should be greater than or equal to the total heat loss of the area to be heated. The total heat loss should be calculated by an approved method or in accordance with “ASHRAE Guide” or “Manual J-Load Calculations” published by the Air Conditioning Contractors of America.

*Obtain from: American National Standards Institute 1430 Broadway New York, NY 10018

Location Considerations

- The furnace should be as centralized as is practical with respect to the air distribution system.
- Do not install the furnace directly on carpeting, tile, or combustible material other than wood flooring.
- When installed in a residential garage, the furnace must be positioned so the burners and ignition source are located not less than 18 inches (457 mm) above the floor and protected from physical damage by vehicles.

Notes:

⚠ WARNING

TO PREVENT POSSIBLE PERSONAL INJURY OR DEATH DUE TO ASPHYXIATION, THIS FURNACE MUST BE CATEGORY I VENTED. DO NOT VENT USING CATEGORY III VENTING.

Category I Venting is venting at a non-positive pressure. A furnace vented as Category I is considered a fan-assisted appliance and the vent system does not have to be “gas tight.” **NOTE:** Single stage gas furnaces with induced draft blowers draw products of combustion through a heat exchanger allowing, in some instances, common venting with natural draft appliances (i.e. water heaters). All installations must be vented in accordance with National Fuel Gas Code NFPA 54/ANSI Z223.1 - latest edition. In Canada, the furnaces must be vented in accordance with the National Standard of Canada, CAN/CSA B149.1 and CAN/CSA B149.2 - latest editions and amendments.

NOTE: The vertical height of the Category I venting system must be at least as great as the horizontal length of the venting system.

Accessibility Clearances (Minimum)

Unobstructed front clearance of 24" **for servicing** is recommended.

MINIMUM CLEARANCE TO COMBUSTIBLE MATERIALS - INCHES

Sides	Rear	Front*	Vent		Top
			SW	B	
1	0	3	6	1	1

* 24" clearance for serviceability recommended.
** Single Wall Vent (SW) to be used only as a connector. Refer to the venting tables outlined in the Installation Manual for additional venting requirements.

Note: In all cases accessibility clearance shall take precedence over clearances from the enclosure where accessibility clearances are greater. All dimensions are given in inches.

High Altitude Derate

IMPORTANT NOTE: The furnace as shipped requires no change to run between 0 - 5500 feet. Do not attempt to increase the firing rate by changing orifices or increasing the manifold pressure below 5500 feet. This can cause poor combustion and equipment failure.

High altitude installations above 5500 feet may require both a pressure switch and an orifice change. These changes are necessary to compensate for the natural reduction in the density of both the gas fuel and the combustion air at higher altitude.

For installations above 5500 feet, please refer to your distributor for required kit(s). Contact the distributor for a tabular listing of appropriate manufacturer’s kits for propane gas and/or high altitude installations. The indicated kits must be used to insure safe and proper furnace operation. All conversions must be performed by a qualified installer, or service agency.

PRODUCT DIMENSIONS

DD80HS

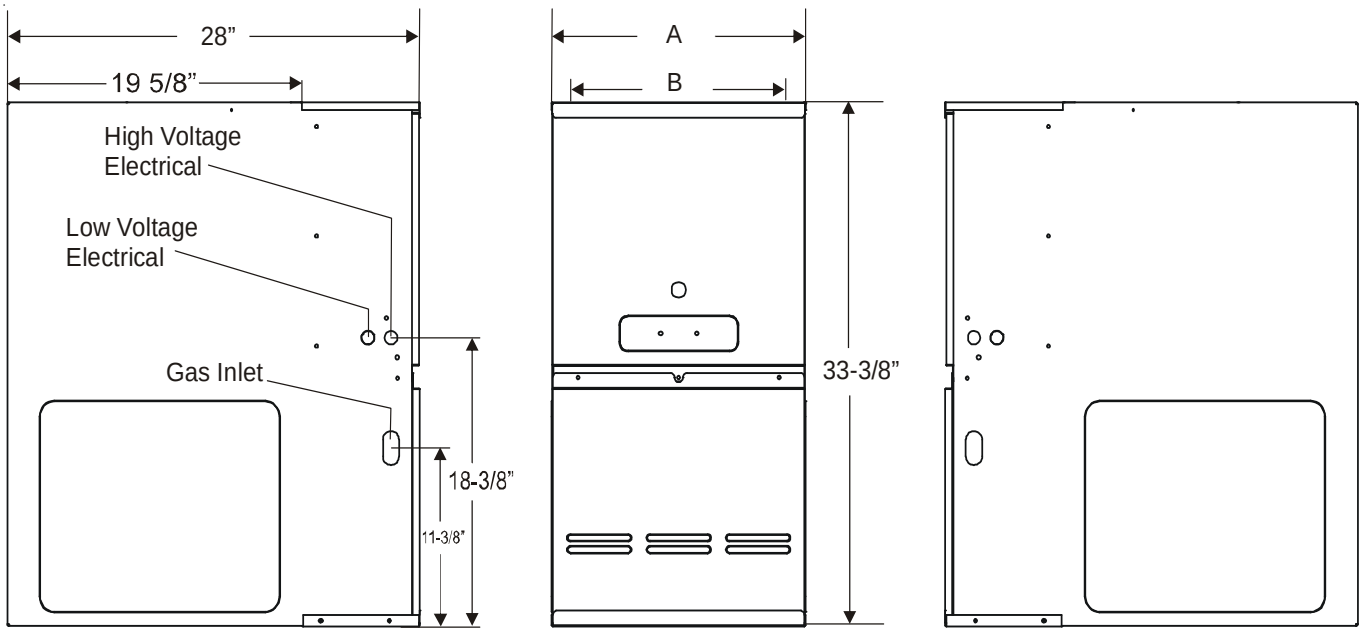

MODEL	A	B	NON-COMBUSTIBLE FLOOR BASE
DD80HS0403AX DD80HS0603AX	14	12 1/2	SBT14
DD80HS0804BX	17 1/2	16	SBT17
DD80HS1005CX	21	19 1/2	SBT21

All dimensions are in inches.

PRESSURE SWITCH		
MODEL	PART NO.	OPENS*
DD80HS0403AX	B1370142	-0.60
DD80HS0603AX	B1370142	-0.60
DD80HS0804BX	B1370142	-0.60
DD80HS1005CX	0130F00042	-0.80

Note: All negative pressure readings are in inches of water colur

PRIMARY LIMIT		
Part Number	0130F00036	20162901
Open Setting (°F)	180	210
DD80HS0403AX	1	---
DD80HS0603AX	1	---
DD80HS0804BX	1	---
DD80HS1005CX	---	1

ROLLOUT LIMIT SWITCHES	
Part Number	10123529
Open Setting (°F)	300
DD80HS0403AX	1
DD80HS0603AX	1
DD80HS0804BX	1
DD80HS1005CX	1

AUXILIARY LIMIT SWITCHES	
Part Number	0130F00038
Open Setting (°F)	120
DD80HS0403AX	1
DD80HS0603AX	1
DD80HS0804BX	1
DD80HS1005CX	1

PRODUCT DESIGN

Thermostats:

NOTE: *Complete lineup of thermostats can be found in the Thermostat Specification Sheets.*

Filters:

Filters are required with this furnace and must be provided by the installer. The filters used must comply with UL900 or CAN/ULCS111 standards. Installing this furnace without filters will void the unit warranty

MINIMUM FILTER SIZES for DISPOSABLE FILTERS

FURNACE INPUT	FILTER SIZE
40M	320 in^2
60M	483 in^2
80M	640 in^2
100M	800 in^2

DISPOSABLE NOMINAL 300 F.M. FACE VELOCITY

PRODUCT DESIGN

Dual $aver Configuration & Operation

Dual$aver

This furnace is capable of the following heating modes:

- Single Stage (Factory Setting)
- Modified Two-Stage
  - Fixed 5-Min. Low Stage
  - Auto Time (1-12 Min.) Low Stage

To change from the factor single-stage operation, adjust the dipswitches on the ignition control as follows:

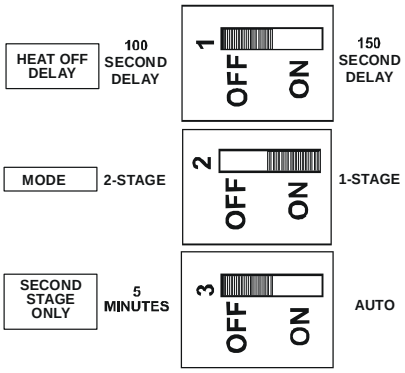

* Switches for White-Rodgers board shown above
With other venders, order of switches may vary
but functionality stays the same.

Note: This furnace is designed to be used with a single-stage thermostat.

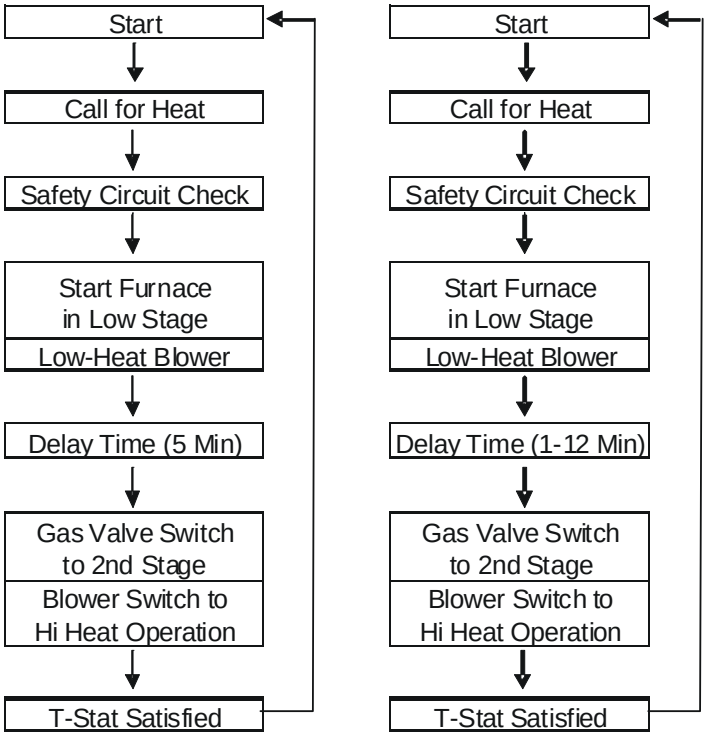

FURNACE SPECIFICATIONS DD80HS

MODEL	DD80HS0403AX	DD80HS0603AX	DD80HS0804BX	DD80HS1005CX
Btuh Input (US) High Fire	40,000	60,000	80,000	100,000
Output (US) High Fire	32,000	48,000	64,000	80,000
A.F.U.E.[1]	80%	80%	80%	80%
Rated External Static (" w.c.)	.20 - .50	.20 - .50	.20 - .50	.20 - .50
Temperature Rise (°F)	25-55	30-60	35-65	40-70
Pressure Switch Trip Point (" w.c.)	-0.60	-0.60	-0.60	-0.80
Blower Wheel (D" x W")	10 X 6	10 X 6	10 X 8	10 X 10
Blower Horsepower	1/3	1/3	1/2	3/4
Blower Speeds	4	4	4	4
Available AC @ 0.5" ESP	3	3	4	5
Power Supply	115-60-1	115-60-1	115-60-1	115-60-1
Minimum Circuit Ampacity (MCA)[3]	8.5	8.5	12.9	12.9
Maximum Overcurrent Device[4]	15	15	15	15
Transformer (VA)	40	40	40	40
Heat Anticipator (Amps)	0.7	0.7	0.7	0.7
Primary Limit Setting (°F)	180	180	180	210
Auxiliary Limit Setting (°F)	120	120	120	120
Rollout Limit Setting (°F)	300	300	300	300
Gas Supply Pressure (Natural/Propane) (" w.c.)	7 / 11	7 / 11	7 / 11	7 / 11
Manifold Pressure (Natural/Propane) High Stage (" w.c.)	3.5 / 10	3.5 / 10	3.5 /10	3.5 /10
Orifice Size (Natural/Propane)	#45 / #55	#45 / #55	#45 / #55	#45 / #55
Number of Burners	2	3	4	5
Vent Connector Diameter (inches) [2]	4	4	4	4
Shipping Weight (lbs.)	88	92	106	114

1 Natural Gas BTU/h. For altitudes above 2,000', reduce input rating 4% for each 1,000' above sea level.

2 DOE AFUE based upon Isolated Combustion System (ICS)

3 Vent and combustion air diameters may vary depending upon vent length.
Refer to the latest editions of the National Fuel Gas Code NFPA 54/ANSI Z223.1 (in the USA) and the Canada National Standard of Canada, CAN/CSA B149.1 and CAN/CSA B142.2 (in Ca

4 Minimum Circuit Ampacity = (1.25 x Circulator Blower Amps) + ID Blower amps. Wire size should be determined in accordance with National Electrical Codes. Extensive wire runs will require larger wire sizes.

5 Maximum Overcurrent Protection Device refers to maximum recommended fuse or circuit breaker size. May use fuses or HACR-type circuit breakers of the same size as noted.

Notes:

- All furnaces are manufactured for use on 115 VAC, 60 Hz, single-phase electrical supply.
- Gas Service Connection ½" FPT
- Important: Size fuses and wires properly and make electrical connections in accordance with the National Electrical Code and/or all existing local codes.

NOTES:

* These furnaces are manufactured for natural gas operation. Optional Kits are available for conversion to propane gas operation.

* For elevations above 2000 ft. the rating should be reduced by 4% for each 1000 ft. above sea level. The furnace must not be derated, orifice changes should only be made if necessary for altitude.

* The total heat loss from the structure as expressed in TOTAL BTU/HR must be calculated by the manufactures method in accordance with the "A.S.H.R.A.E. GUIDE" or "MANUAL J-LOAD CALCULATIONS" published by the AIR CONDITIONING CONTRACTORS OF AMERICA. The total heat loss calculated should be equal to or less than the heating capacity. Output based on D.O.E. test procedures, steady state efficiency times output.

Unit specifications are subject to change without notice. **ALWAYS** refer to the unit's serial plate for the most up-to-date general and electrical information.

BLOWER PERFORMANCE SPECIFICATIONS DD80HS

BLOWER PERFORMANCE

(CFM & Temperature Rise vs. External Static Pressure)

Model	Motor Speed	Tons AC at 0.5" ESP	EXTERNAL STATIC PRESSURE (Inches Water Column)												
			0.1		**0.2**		**0.3**		**0.4**		**0.5**		**0.6**	**0.7**	**0.8**
			CFM	RISE	CFM	RISE	CFM	RISE	CFM	RISE	CFM	RISE	CFM	CFM	CFM
DD80HS0403AX	High	3.0	1,353	----	1,290	----	1,246	----	1,199	25	1,149	26	1,116	1,116	1,099
	Med	2.5	1,183	25	1,113	27	1,098	27	1,052	28	1,039	29	1,006	1,012	969
	Med-Lo	2.0	980	30	946	31	920	32	900	33	896	33	885	855	804
	Low	1.5	778	38	762	39	738	40	746	40	738	40	717	696	678
DD80HS0603AX	High	3.0	1,290	34	1,236	36	1,194	37	1,166	38	1,176	38	1,166	1,108	1,029
	Med	2.5	1,139	39	1,090	41	1,035	43	1,063	42	1,063	42	1,020	962	895
	Med-Lo	2.0	962	46	927	48	925	48	941	47	909	49	877	834	779
	Low	1.5	787	56	776	57	763	58	744	60	723	----	690	641	581
DD80HS0804BX	High	4.0	2,128	----	2,063	----	2,001	----	1,927	----	1,824	----	1,726	1,628	1,529
	Med	3.5	1,840	----	1,788	----	1,745	----	1,689	35	1,625	36	1,550	1,470	1,364
	Med-Lo	3.0	1,602	37	1,558	38	1,543	38	1,493	40	1,455	41	1,402	1,328	1,239
	Low	2.5	1,277	46	1,252	47	1,244	48	1,229	48	1,214	49	1,179	1,141	1,079
DD80HS1005CX	High	5.0	2,405	----	2,361	----	2,250	----	2,161	-----	2,037	36	1,937	1,808	1,689
	Med	4.0	1,880	39	1,838	40	1,794	41	1,734	43	1,677	44	1,568	1,510	1,401
	Med-Lo	3.5	1,659	45	1,630	45	1,587	47	1,537	48	1,492	50	1,445	1,368	1,287
	Low	3.0	1,472	50	1,454	51	1,404	53	1,366	54	1,326	56	1,300	1,228	1,139

NOTES:

- CFM in chart is without filter(s). Filters do not ship with this furnace, but must be provided by the installer.
- All furnaces ship as high-speed cooling. Installer must adjust blower cooling speed as needed.
- For most jobs, about 400 CFM per ton when cooling is desirable
- INSTALLATION IS TO BE ADJUSTED TO OBTAIN TEMPERATURE RISE WITHIN THE RANGE SPECIFIED ON THE RATING PLATE.
- The chart is for information only. For satisfactory operation, external static pressure must not exceed values shown on the rating plate. The shaded area indicates

  ranges in excess of maximum static pressure allowed when heating.
- The dashed (- - -) areas indicate a temperature rise not recommended for this model.
- At higher altitudes, a properly de-rated unit will have approximately the same temperature rise at a

  particular CFM, while ESP at the CFM will be lower.

BLOWER PERFORMANCE SPECIFICATIONS

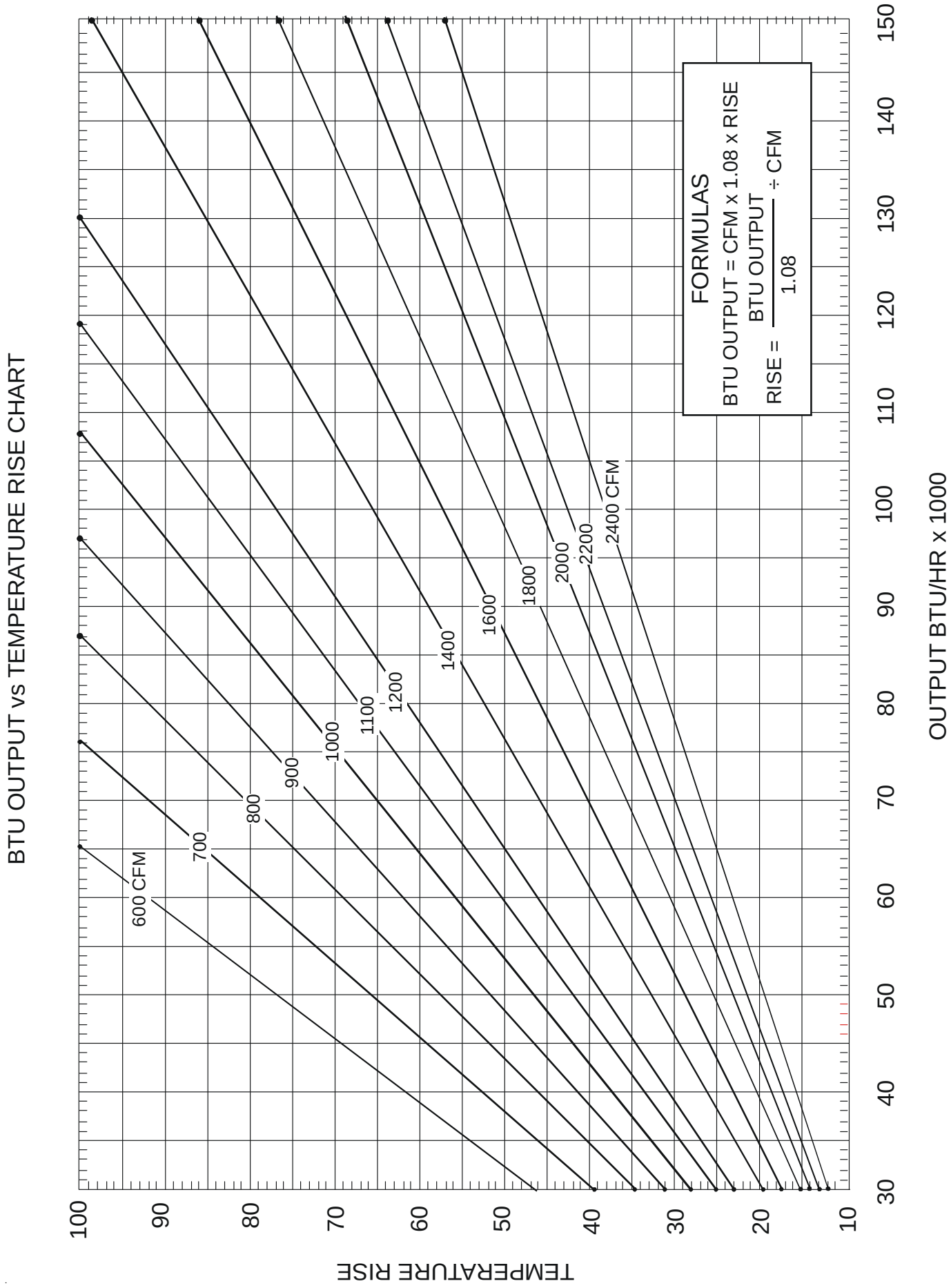

WIRING DIAGRAM DD80HS

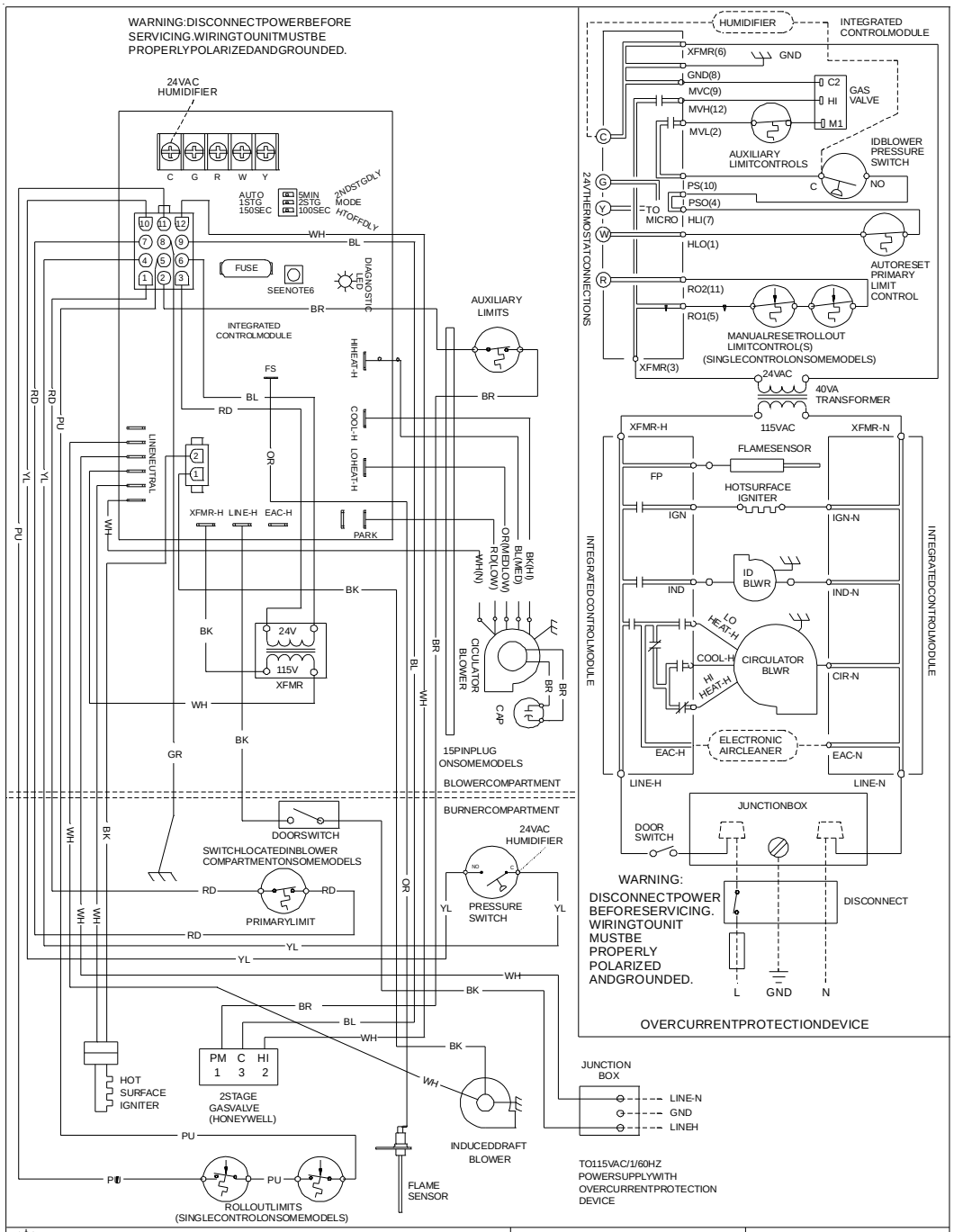

HIGH VOLTAGE! DISCONNECT ALL POWER BEFORE SERVICING OR INSTALLING THIS UNIT. MULTIPLE POWER SOURCES MAY BE PRESENT. FAILURE TO DO SO MAY CAUSE PROPERTY DAMAGE, PERSONAL INJURY OR DEATH.

WARNING

- 0 STEADYON=NORMALOPERATION
- ● OFF =CONTROLFAILURE
- 1 1FLASH = SYSTEMLOCKOUT(RETRIES/RECYCLESEXCEEDED)
- 2 2FLASHES=PRESSURESWITCHSTUCKCLOSED
- 3 3FLASHES=PRESSURESWITCHSTUCKOPEN
- 4 4FLASHES=OPENHIGHLIMIT
- 5 5FLASHES=FLAMESENSEWITHOUTGASVALVE
- 6 6FLASHES= OPENROLLOUTOROPENFUSE
- 7 7FLASHES=LOWFLAMESIGNAL
- 8 8FLASHES=CHECKIGNITERORIMPROPERGROUND
- C RAPIDFLASHES=REVERSED115VACPOLARITY/VERIFYGND

LOWVOLTAGE(24V)
LOWVOLTAGEFIELD
HIVOLTAGE(115V)
HIVOLTAGEFIELD
JUNCTION
TERMINAL
INTERNALTO INTEGRATEDCONTROL
PLUGCONNECTION

EQUIPMENTGND
FIELDGND
FIELDSPLICE
SWITCH(TEMP.)
IGNITER
SWITCH(PRESS.)
OVERCURRENT PROT.DEVICE

COLORCODES:

YL YELLOW	PKPINK
OR ORANGE	BRBROWN
PUPURPLE	WH WHITE
GRGREEN	BLBLUE
BKBLACK	GYGRAY
	RD RED

0140F00662 REV.A

NOTES:
1.SETHEATANTICIPATORONROOMTHERMOSTATAT0.7AMPS.
2.MANUFACTURER'SSPECIFIEDREPLACEMENTPARTSMUSTBEUSEDWHENSERVICING.
3.IFANYOFTHEORIGINALWIREASSUPPLIEDWITHTHEFURNACEMUSTBE REPLACED,ITMUSTBEREPLACEDWITHWIRINGMATERIALHAVINGATEMPERATURE RATINGOFATLEAST105 °C.USECOPPERCONDUCTORSONLY.
4.BLOWERSPEEDSSHOULDBEADJUSTEDBYINSTALLERTOMATCHTHEINSTALLATION REQUIREMENTSSOASTOPROVIDETHECORRECTHEATINGTEMPERATURERISEANDTHE CORRECTCOOLINGCFM.(SEESPECSHEETFORAIRFLOWCHART)
5.UNITMUSTBEPERMANENTLYGROUNDEDANDCONFORMTON.E.C.ANDLOCALCODES.
6.TORECALLTHELAST5FAULTS,MOSTRECENTTOLEASTRECENT,DEPRESSSWITCH FORMORETHAN2SECONDSWHILEINSTANDBY(NOTHERMOSTATINPUTS).

Wiring is subject to change. Always refer to the wiring diagram on the unit for the most up-to-date wiring.

SCHEMATICS

WARNING

HIGH VOLTAGE!
DISCONNECT ALL POWER BEFORE SERVICING OR INSTALLING THIS UNIT. MULTIPLE POWER SOURCES MAY BE PRESENT. FAILURE TO DO SO MAY CAUSE PROPERTY DAMAGE, PERSONAL INJURY OR DEATH.

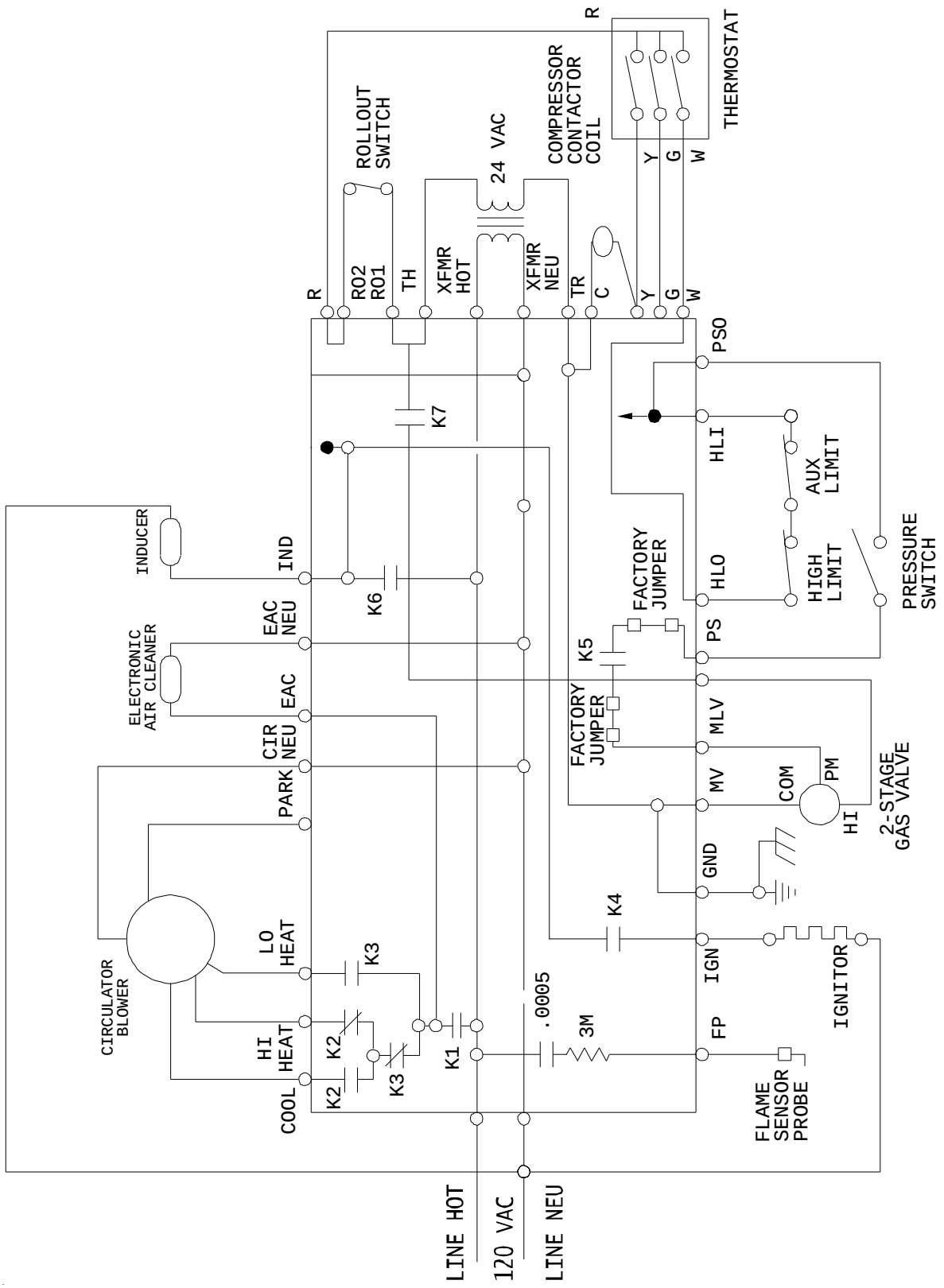

TYPICAL SCHEMATIC
DD80HS ___X* MODEL FURNACES
WR 50M56-289 INTEGRATED IGNITION CONTROL

This schematic is for reference only. Not all wiring is as shown above. Refer to the appropriate wiring diagram for the unit being serviced.

Wiring is subject to change. Always refer to the wiring diagram on the unit for the most up-to-date wiring.