Service Instructions

GPG 14 SEER
Gas Electric Package Units
with R-410A Refrigerant

Not for installation in the United States or Canada. This unit is for export only.

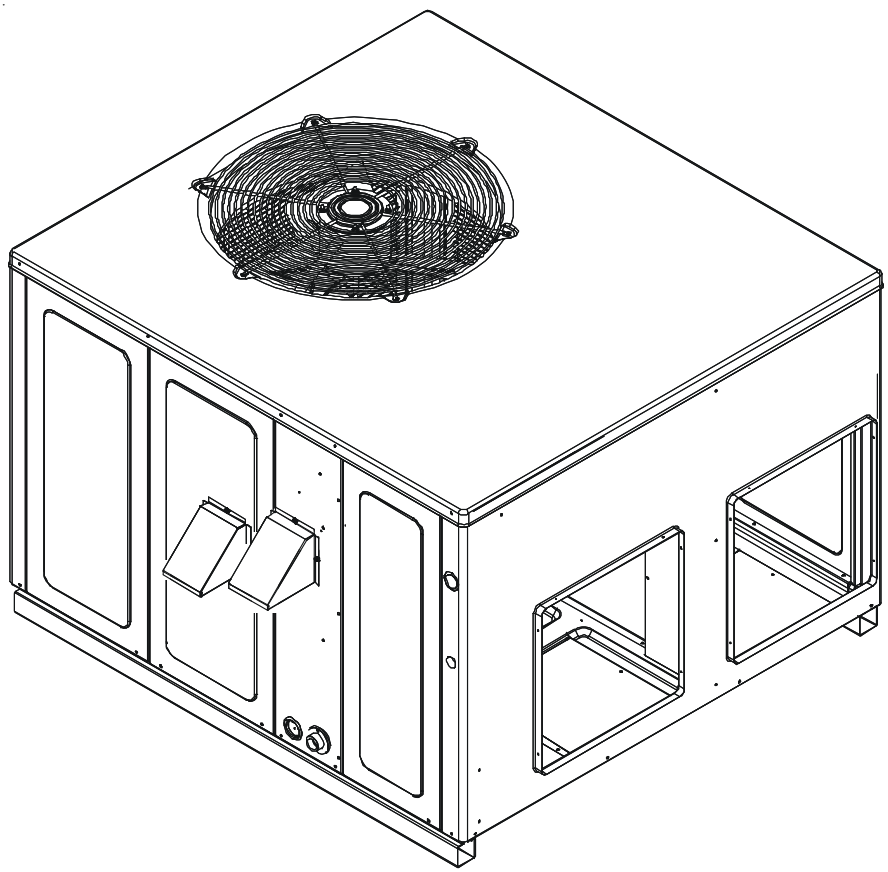

This manual is to be used by qualified, professionally trained HVAC technicians only. Goodman does not assume any responsibility for property damage or personal injury due to improper service procedures or services performed by an unqualified person.

RSGX6300012r1
May 2018

Copyright © 2016, 2018 Goodman Company, L.P.

TABLE OF CONTENTS

IMPORTANT INFORMATION ..... 2 - 3
PRODUCTION IDENTIFICATION ..... 4 - 5
LIGHTING INSTRUCTIONS ..... 6 - 7
PRODUCT DESIGN ..... 8 - 13
SYSTEM OPERATION ..... 14 - 19
SCHEDULED MAINTENANCE ..... 20 - 22
TROUBLESHOOTING CHARTS ..... 23 - 24
SERVICING TABLE OF CONTENTS 25
SERVICING ..... 26 - 49
WIRING DIAGRAM ..... 50 - 51

IMPORTANT INFORMATION

Pride and workmanship go into every product to provide our customers with quality products. It is possible, however, that during its lifetime a product may require service. Products should be serviced only by a qualified service technician who is familiar with the safety procedures required in the repair and who is equipped with the proper tools, parts, testing instruments and the appropriate service manual. **REVIEW ALL SERVICE INFORMATION IN THE APPROPRIATE SERVICE MANUAL BEFORE BEGINNING REPAIRS.**

IMPORTANT NOTICES FOR CONSUMERS AND SERVICERS

RECOGNIZE SAFETY SYMBOLS, WORDS AND LABELS

WARNING

This unit should not be connected to, or used in conjunction with, any devices that are not design certified for use with this unit or have not been tested and approved by the manufacturer. Serious property damage or personal injury, reduced unit performance and/or hazardous conditions may result from use of devices that have not been approved or certified by the manufacturer.

WARNING

Only personnel that have been trained to install, adjust, service or repair (hereinafter, "service") the equipment specified in this manual should service the equipment. The manufacturer will not be responsible for any injury or property damage arising from improper service or service procedures. If you service this unit, you assume responsibility for any injury or property damage which may result. In addition, in jurisdictions that require one or more licenses to service the equipment specified in this manual, only licensed personnel should service the equipment. Improper installation, adjustment, servicing or repair of the equipment specified in this manual, or attempting to install, adjust, service or repair the equipment specified in this manual without proper training may result in product damage, property damage, personal injury or death.

WARNING

Do not store combustible materials or use gasoline or other flammable liquids or vapors in the vicinity of this appliance as property damage or personal injury could occur. Have your contractor point out and identify the various cut-off devices, switches, etc., that serves your comfort equipment.

WARNING

HIGH VOLTAGE!
Disconnect ALL power before servicing or installing this unit. Multiple power sources may be present. Failure to do so may cause property damage, personal injury or death.

To locate an authorized servicer, please consult your telephone book or the dealer from whom you purchased this product. For further assistance, please contact:

GOODMAN® BRAND PRODUCTS
TOLL FREE 1-877-254-4729 (U.S. only)
email us at: **customerservice@goodmanmfg.com**
fax us at: **(713) 856-1821**
(Not a technical assistance line for dealers.)
Outside the U.S., call 1-713-861-2500
(Not a technical assistance line for dealers.)
Your telephone company will bill you for the call.

IMPORTANT INFORMATION

SAFE REFRIGERANT HANDLING

While these items will not cover every conceivable situation, they should serve as a useful guide.

WARNING

Refrigerants are heavier than air. They can "push out" the oxygen in your lungs or in any enclosed space.To avoid possible difficulty in breathing or death:

- **Never purge refrigerant into an enclosed room or space. By law, all refrigerants must be reclaimed.**
- **If an indoor leak is suspected, thoroughly ventilate the area before beginning work.**
- **Liquid refrigerant can be very cold. To avoid possible frostbite or blindness, avoid contact with refrigerant and wear gloves and goggles. If liquid refrigerant does contact your skin or eyes, seek medical help immediately.**

WARNING

To avoid possible explosion:

- **Never apply flame or steam to a refrigerant cylinder. If you must heat a cylinder for faster charging, partially immerse it in warm water.**
- **Never fill a cylinder more than 80% full of liquid refrigerant.**
- **Never add anything other than R-22 to an R-22 cylinder or R-410A to an R-410A cylinder. The service equipment used must be listed or certified for the type of refrigerant used.**
- **Store cylinders in a cool, dry place. Never use a cylinder as a platform or a roller.**

WARNING

To avoid possible injury, explosion or death, practice safe handling of refrigerants.

WARNING

The compressor POE oil for R-410A units is extremely susceptible to moisture absorption and could cause compressor failure. Do not leave system open to atmosphere any longer than necessary for installation.

WARNING

To avoid possible explosion, use only returnable (not disposable) service cylinders when removing refrigerant from a system.

- **Ensure the cylinder is free of damage which could lead to a leak or explosion.**
- **Ensure the hydrostatic test date does not exceed 5 years.**
- **Ensure the pressure rating meets or exceeds 400 lbs.**

When in doubt, do not use cylinder.

WARNING

System contaminants, improper service procedure and/or physical abuse affecting hermetic compressor electrical terminals may cause dangerous system venting.

The successful development of hermetically sealed refrigeration compressors has completely sealed the compressor's moving parts and electric motor inside a common housing, minimizing refrigerant leaks and the hazards sometimes associated with moving belts, pulleys or couplings.

Fundamental to the design of hermetic compressors is a method whereby electrical current is transmitted to the compressor motor through terminal conductors which pass through the compressor housing wall. These terminals are sealed in a dielectric material which insulates them from the housing and maintains the pressure tight integrity of the hermetic compressor. The terminals and their dielectric embedment are strongly constructed, but are vulnerable to careless compressor installation or maintenance procedures and equally vulnerable to internal electrical short circuits caused by excessive system contaminants.

In either of these instances, an electrical short between the terminal and the compressor housing may result in the loss of integrity between the terminal and its dielectric embedment. This loss may cause the terminals to be expelled, thereby venting the vaporous and liquid contents of the compressor housing and system.

A venting compressor terminal normally presents no danger to anyone, providing the terminal protective cover is properly in place.

If, however, the terminal protective cover is not properly in place, a venting terminal may discharge a combination of

(a) hot lubricating oil and refrigerant

(b) flammable mixture (if system is contaminated with air)

in a stream of spray which may be dangerous to anyone in the vicinity. Death or serious bodily injury could occur.

Under no circumstances is a hermetic compressor to be electrically energized and/or operated without having the terminal protective cover properly in place.

See Service Section S-17 for proper servicing.

PRODUCT IDENTIFICATION

The model number is used for positive identification of component parts used in manufacturing. Please use this number when requesting service or parts information.

Package Residential Gas Electric and Dual Fuel Nomenclature

G P G 1 4 6 0 1 2 0 M 4 E A A

Brand
G - Goodman® Brand

Product Type
P - Packaged

Unit Type
G - Gas/Electric
D - Dual Fuel

SEER
14 - 14 SEER

Tonnage Nominal

24 - 2 ton	42 - 3.5 ton
30 - 2.5 ton	48 - 4.0 ton
36 - 3 ton	60/61 - 5 ton

Nominal Heat Input

040	40 MBTU/H	100	100 MBTU/H
060	60 MBTU/H	120	120 MBTU/H
080	80 MBTU/H		

Engineering
Minor revision

Engineering
Major revision

Voltage
E - 400 V three phase 50 Hz

Refrigerant
4 - R-410A

Configuration
M - Multi-position
H - Horizontal

PRODUCT IDENTIFICATION

Goodman® Brand Three Phase Package Gas Units	
Model #	**Description**
GPG1460120M4EAA	**G**oodman **P**ackage **G**as **M**ulti-Position 14 Seer R410A gas/electric unit. Initial release of 400/3/50Hz three phase models.

These units have R410A refrigerant

LIGHTING INSTRUCTIONS GPG1460120M4E**

FOR YOUR SAFETY READ BEFORE OPERATING

WARNING If you do not follow these instructions exactly, a fire or explosion may result causing property damage, personal injury or loss of life.

A. This appliance does not have a pilot. It is equipped with an ignition device which automatically lights the burners. Do not try to light the burners by hand.

B. BEFORE OPERATING smell all around the appliance area for gas. Be sure to smell next to the floor because some gas is heavier than air and will settle on the floor.

WHAT TO DO IF YOU SMELL GAS

- Do not try to light any appliance.
- Do not touch any electric switch; do not use any telephone in your building.
- Immediately call your gas supplier from a neighbor's phone. Follow the gas suppliers instructions.
- If you cannot reach your gas supplier, call the fire department.

C. Use only your hand to move the gas control switch or knob. Never use tools. If the gas control switch or knob will not operate, don't try to repair it, call a qualified service technician. Force or attempted repair may result in a fire or explosion.

D. Do not use this appliance if any part has been under water. Immediately call a qualified service technician to inspect the appliance and to replace any part of the control system and any gas control which has been under water.

WARNING: Improper installation, adjustment, alteration, service or maintenance can cause injury or property damage. Refer to the user's information manual provided with this furnace. For assistance or additional information consult a qualified installer, service agency or the gas supplier.

This furnace must be installed in accordance with the manufacturers instructions and local codes. In the absence of local codes, follow the National Fuel Gas Code, ANSI Z223.1.

OPERATING INSTRUCTIONS

1. STOP! Read the safety information above on this label.
2. Set the thermostat to lowest setting.
3. Turn off all electric power to the appliance.
4. This appliance is equipped with an automatic ignition system which automatically lights the burners. Do not try to light the burners by hand.
5. Remove control access panel.
6. Move the gas control switch or knob to "OFF".

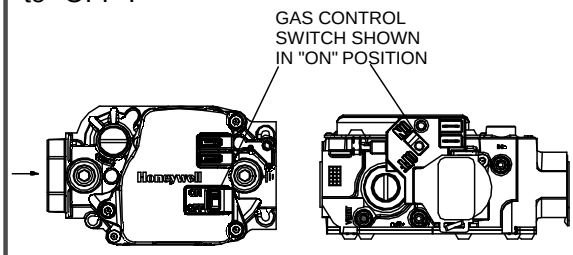

7. Wait five (5) minutes to clear out any gas. Then smell for gas, including near the floor. If you smell gas, STOP! Follow "B" in the safety information above on this label. If you don't smell gas, go to the next step.
8. Move the gas control switch or knob to "ON".
9. Replace control access panel.
10. Turn on all electric power to the appliance.
11. Set the thermostat to the desired setting.
12. If the appliance will not operate, follow the instructions "To Turn Off Gas To Appliance" and call your service technician or gas supplier.

WARNING: If not installed, operated and maintained in accordance with the manufacturer's instructions, this product could expose you to substances in fuel combustion which can cause death or serious illness and which are known to the State of California to cause cancer, birth defects or other reproductive harm. This product contains fiberglass insulation. Fiberglass insulation contains a chemical known by the State of California to cause cancer.

TO TURN OFF GAS TO APPLIANCE

1. Set the thermostat to its lowest setting.
2. Turn off all electric power to the appliance if service is to be performed.
3. Remove control access panel.
4. Move the gas control switch or knob to "OFF". Do not force.
5. Replace control access panel.

FOR YOUR SAFETY Do not store or use gasoline or other flammable vapors and liquids in the vicinity of this or any other appliance.

0140F01902-A

LIGHTING INSTRUCTIONS GPG1460120M4E**

FOR YOUR SAFETY READ BEFORE OPERATING

WARNING: If you do not follow these instructions exactly,a fire orexplosion may result causing property damage, personal injury or loss of life.

A. This appliance does not have a pilot. It is equipped with an ignition device which automatically lights the burner. Do not try to light the burner by hand.

B. BEFORE OPERATING smell all around the appliance area for gas. Be sure to smell next to the floor because some gas is heavier than air and will settle on the floor.

WHAT TO DO IF YOU SMELL GAS

- Do not try to light any appliance.
- Do not touch any electric switch; do not use any phone in your building.
- Immediately call your gas supplier from a neighbor's phone. Follow the gas supplier's instructions.
- If you cannot reach your gas supplier, call the fire department.

C. Use only your hand to push in or turn the gas control lever. Never use tools. If the lever will not push in or turn by hand, don't try to repair it, call a qualified service technician. Force or attempted repair may result in a fire or explosion.

D. Do not use this appliance if any part has been underwater. Immediately call a qualified service technician to inspect the appliance and to replace any part of the control system and any gas control which has been underwater.

LIRE AVANT DE METTRE EN MARCHELIRE

AVERTISSEMENT: Quiconque ne respecte pas à la lettre les instructions dans le presént manuel risque de déclencher un incendie ou une explosion entraînant des dommages matériels, des lesions corporelles ou la perte de vies humaines.

A.Cet appareil ne comporte pas de veilleuse. Il est muni d'un dispositif d'allumage qui allume automatiquement le brûleur. Ne pas tenter d'allumer le brûleur manuellement.

B. AVANT DE LE FAIRE FONCTIONNER, renifler tout autour de l'appariel pour decéler une odeur de gaz. Renifler prés du plancher, car certains gaz sont plus lourds que l'air et peuvent s'accumuler au niveau du sol.

QUE FAIRE S'IL Y A UNE ODEUR DE GAZ

- Ne pas tenter d'allumer d'appareils.
- Ne toucher à aucun interrupteur; ne pas vous servir des téléphones dans le bâtiment.
- Appelez immédiatement votre fournisseur de gaz depuis un voisin. Suivez les instructions du fournisseur de gaz
- Si vous ne pouvez rejoindre le fournisseur de gaz, appelez le service des incendies.»

C. Ne pousser ou tourner la manette d'admission du gaz qu'à la main. Ne jamais emploer d'outil à cette fin. Si la manette reste coincée, ne tenter pas de la réparer; appelez un technicien qualifié. Quiconque tente de forcer la manette ou de la réparer peut provoquer une explosion ou un incendie.»

D. Ne pas se servir de cet appareil s'il a été plongé dans l'eau, même partiellement. Faire inspecter l'appareil par un technicien qualifié et remplacer toutr partie du systéme de contrôle et toute commande qui ont été plongées dans l'eau.»

OPERATING INSTRUCTIONS

1. STOP. Read the safety infrmation above on this label.
2. Set the thermostat to lowest setting.
3. Turn off all electric power to the appliance.
4. This appliance is equipped with an ignition device which automatically lights the burner. Do not try to light the burner by hand.
5. Push the gas control lever to "OFF" Position. Do not force.
6. Wait five (5) minutes to clear out any gas. Then smell for gas, including near the floor. If you then smell gas, STOP.Follow"B" in the safety. information above on this label if you don't smell gas, go to next step.
7. Push gas control lever to "ON".
8. Replace access panel.
9. Turn on all electric power to the appliance.
10. Set thermostat to desired setting.
11. If the appliance will not operate, follow the instructions "To Turn Off Gas To Appliance" and call your service technician or gas company.

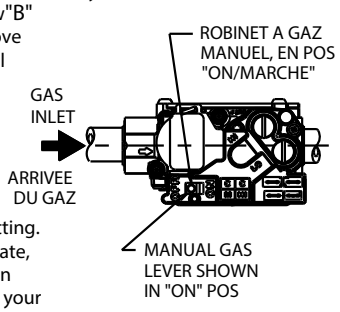

MISE EN MARCHE

1. ARRÊTEZ Lisez les instructions de sécurité dans la section supérieure de cette étiquette.
2. Régler le thermostat à la température la plus basse.
3. Couper l'alimentation électrique de l'appareil.
4. Cet appareil menager etant dote d'un systeme d'allumage automatique, ne pas essayer à allumer le brûleur manuellement.
5. Pousse le levier du contrÔle du gaz a "OFF/ ARRET" position.
6. Attendre cinq (5) minutes pour laisser echapper tout le gaz. Renifler tout autour de l'appareil, y compris prés du plancher, pour déceler une odeur de gaz. Si c'est le cas, ARRÊTEZ. Passer à l'etape B des instructions de securite sur la portion superieure de cette etiquette. S'il n'y a pas d'odeur de gaz, passer à l'etàpe suivante.
7. Pousse le levier du contrôle du gaz à "ON/MARCHE" position.
8. Remettre en place le panneau d'accés.
9. Mettre l'appareil sous tension.
10. Régler le thermostat à la température désirée.
11. Si l'appareil ne se met pas en marche, suivre les instructions intitulées Comment couper l'admission de gaz de l'appareil et appeler un technicien qualifié ou le fournisseur de gaz.

TO TURN OFF GAS TO APPLIANCE

1. Set the thermostat to lowest setting.
2. Turn off all electric power to the appliance if service is to be performed.
3. Push the gas control lever to "OFF" Position. Do not force.
4. Replace control access panel.

POUR COUPER L'ADMISSION DE GAZ DE L'APPAREIL

1. Régler le thermostat à la température la plus bassé.
2. Couper l'alimentation électrique de l'appareil s'il faut procéder à des operations d'entretien.
3. Pousse le levier du contrôle du gaz à "OFF/ ARRET" position. Ne pas forcer.
4. Remettre en place le panneau d'accés.

0140F00000P REV D

PRODUCT DESIGN

Locations and Clearances

NOTE: To ensure proper condensate drainage, unit must be installed in a level position.

In installations where the unit is installed above ground level and not serviceable from the ground (Example: Roof Top installations) the installer must provide a service platform for the service person with rails or guards in accordance with local codes or ordinances or in their absence with the latest edition of the National Fuel Gas Code ANSI Z223.1.

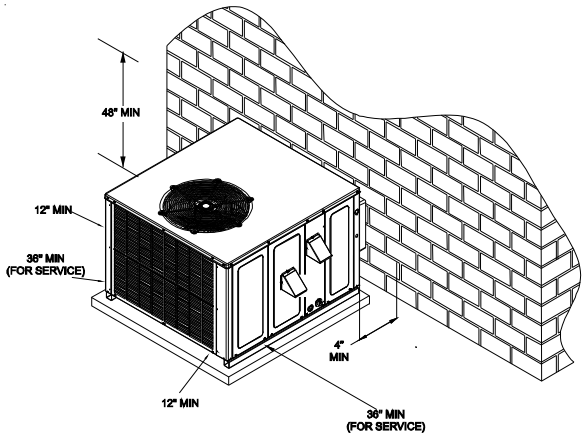

NOTE: Roof overhang should be no more than 36".

Minimum clearances are required to avoid air recirculation and keep the unit operating at peak efficiency. A minimum 12 inch clearance is required to the condenser coil.

NOTE: The flue outlet hood is packaged separately inside the unit and must be installed prior to operation.

WARNING

TO PREVENT POSSIBLE DAMAGE, THE UNIT SHOULD REMAIN IN AN UPRIGHT POSITION DURING ALL RIGGING AND MOVING OPERATIONS. TO FACILITATE LIFTING AND MOVING IF A CRANE IS USED, PLACE THE UNIT IN AN ADEQUATE CABLE SLIDE.

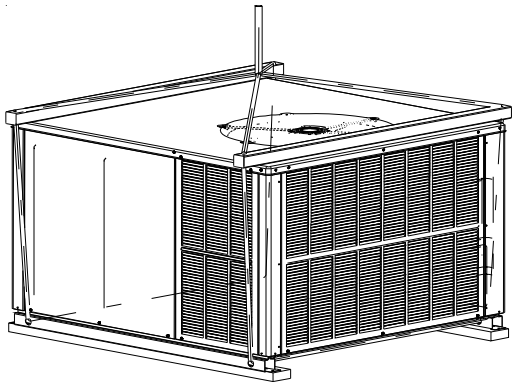

IMPORTANT NOTE: If using bottom discharge with roof curb, ductwork should be attached to the curb prior to installing the unit.

Refer to Roof curb Installation Instructions for proper curb installation. Curbing must be installed in compliance with the National Roofing Contractors Association Manual.

Lower unit carefully onto roof mounting curb. While rigging unit, center of gravity will cause condenser end to be lower than supply air end.

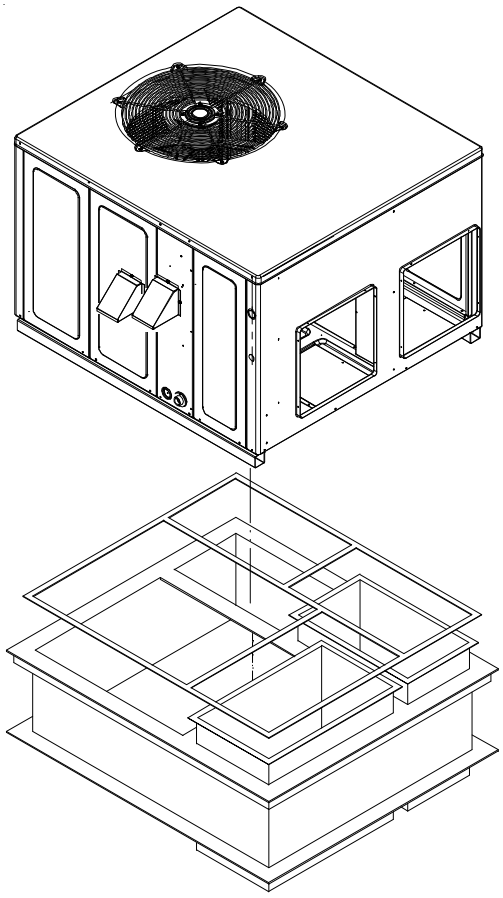

NOTE: A roof curb can be used to utilize bottom discharge. GPG***M Package Units are designed for outdoor installations only in either residential or light commercial applications.

NOTE: To ensure proper condensate drainage, unit must be installed in a level position.

The connecting ductwork (Supply and Return) can be connected for either horizontal or down discharge airflow. In the down discharge applications a matching Roof Curb is recommended .

A return air filter must be installed behind the return air grille(s) or provision must be made for a filter in an accessible location within the return air duct. The minimum filter area should not be less than those sizes listed in the Specification Section. Under no circumstances should the unit be operated without return air filters.

PRODUCT DESIGN

A 3/4" - 14 NPT drain connector is provided for removal of condensate water from the indoor coil. In order to provide proper condensate flow, do not reduce the drain line size. **NOTE:** Tighten drain to a maximum torque of 10 in-lbs.

Refrigerant flow control is achieved by use of thermostatic expansion valves (TXV) or flowrator.

The single phase models use permanent split capacitors (PSC) design compressors. Starting components are therefore not required. A low MFD run capacitor assists the compressor to start and remains in the circuit during operation.

GPG***M three phase units use three phase compressors. Starting components and run capacitors are therefore not required.

GPG***M Package Gas Units are designed for outdoor installations only in either residential or light commercial applications and are available in 5 ton sizes. They are designed for 400 volt 3 phase applications.

The connecting ductwork (Supply and Return) can be connected for either horizontal or vertical airflow. In the vertical application, a matching Roof Curb is recommended.

A return air filter must be installed behind the return air grille(s) or provision must be made for a filter in an accessible location within the return air duct (3 phase models have an internal downflow filter rack). The minimum filter area should not be less than those sizes listed in the Specification Section. Under no circumstances should the unit be operated without return air filters.

GPG14***M model units use EEM type indoor blower motors. EEM motors are constant torque motors with very low power consumption and are energized by a 24V signal from the ignition control board. The EEM motors feature an integrated control module.

Air for condensing (cooling cycle) is drawn through the outdoor coil by a propeller fan, and is discharged vertically out the top of the unit. The outdoor coil is designed for .0 static. No additional restriction (ductwork) shall be applied.

Conditioned air is drawn through the filter(s), field installed, across the coil and back into the conditioned space by the indoor blower.

Most GPG***M series package units use the Compliant Scroll compressor; there are a number of design characteristics which are different from the traditional reciprocating compressor.

- Due to their design Scroll compressors are inherently more tolerant of liquid refrigerant. **NOTE**: Even though the compressor section of a Scroll compressor is more tolerant of liquid refrigerant, continued flood back or flooded start conditions may wash oil from the bearing surfaces causing premature bearing failure.
- These Scroll compressors use "POE" or polyolester oil which is NOT compatible with mineral oilbased lubricants like 3GS. "POE" oil must be used if additional oil is required.
- Compliant scroll compressors perform “quiet” shutdowns that allow the compressor to restart immediately without the need for a time delay. This compressor will restart even if the system has not equalized.
- Operating pressures and amp draws may differ from standard reciprocating compressors. This information may be found in the “Cooling Performance Data” section.

A scroll is an involute spiral which, when matched with a mating scroll form as shown, generates a series of crescent shaped gas pockets between the two members.

During compression, one scroll remains stationary (fixed scroll) while the other form (orbiting scroll) is allowed to orbit (but not rotate) around the first form.

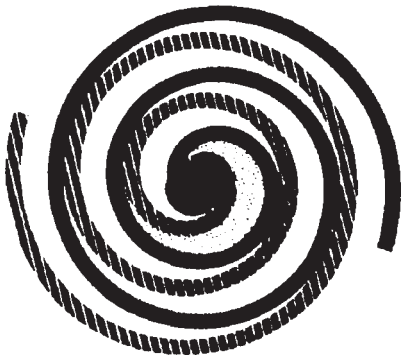

As this motion occurs, the pockets between the two forms are slowly pushed to the center of the two scrolls while simultaneously being reduced in volume. When the pocket reaches the center of the scroll form, the gas, which is now at a high pressure, is discharged out of a port located at the center.

During compression, several pockets are being compressed simultaneously, resulting in a very smooth process. Both the suction process (outer portion of the scroll members) and the discharge process (inner portion) are continuous.

ELECTRICAL WIRING

The units are designed for operation on 50hertz current and at voltages as shown on the rating plate. All internal wiring is complete. Ensure the power supply to the compressor contactor is brought to the unit as shown on the supplied unit wiring diagram. The 24V wiring must be connected between the unit control panel and the room thermostat.

LINE VOLTAGE WIRING

Power supply to the unit must be N.E.C. Class 1, and must comply with all applicable codes. The unit must be electrically grounded in accordance with the local codes or, in their absence, with the latest edition of the National Electrical Code, ANSI/NFPA No. 70, or in Canada, Canadian Electrical Code, C22.1, Part 1. A fused disconnected must be provided and sized in accordance with the unit minimum circuit ampacity.

The best protection for the wiring is the smallest fuse or breaker which will hold the equipment on line during normal operation without nuisance trips. Such a device will provide maximum circuit protection.

PRODUCT DESIGN

⚠ WARNING

DO NOT EXCEED THE MAXIMUM OVERCURRENT DEVICE SIZE SHOWN ON THE UNIT DATA PLATE.

All line voltage connections must be made through weather proof fittings. All exterior power supply and ground wiring must be in approved weather proof conduit. Low voltage wiring from the unit control panel to the thermostat requires coded cable. See the following figures for ground level and rooftop wiring.

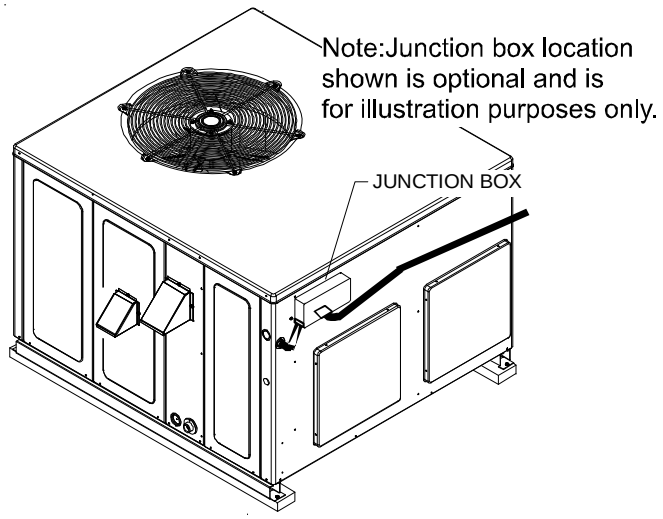

Electrical Power Directly To Junction Box

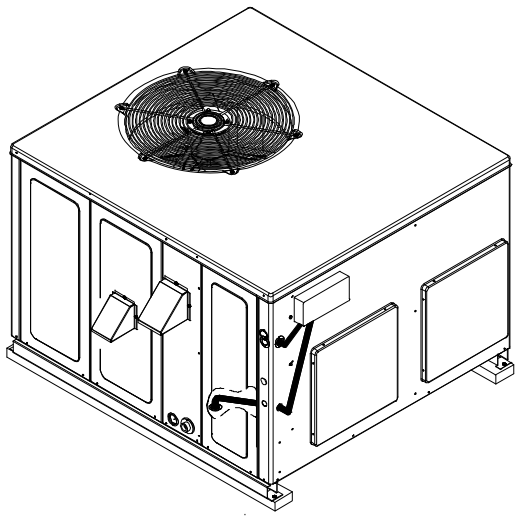

Electrical Power Routed Through Bottom of Unit

The unit transformer is connected for 400V operation.

⚠ WARNING

TO AVOID THE RISK OF PROPERTY DAMAGE, PERSONAL INJURY OR FIRE, USE ONLY COPPER CONDUCTORS.

If it is necessary for the installer to supply additional line voltage wiring to the inside of the package unit, the wiring must comply with all local codes. This wiring must have a minimum temperature rating of 105°C and must be routed away from the burner compartment. All line voltage splices must be made inside the unit control box.

GAS SUPPLY AND PIPING

⚠ CAUTION

THIS PACKAGE GAS UNIT IS FACTORY SET TO OPERATE ON NATURAL GAS AT THE ALTITUDES SHOWN ON THE RATING PLATE. IF OPERATION ON PROPANE IS REQUIRED, OBTAIN AND INSTALL THE PROPER CONVERSION KIT(S) BEFORE OPERATING THIS UNIT. FAILURE TO DO SO MAY RESULT IN UNSATISFACTORY OPERATION AND/OR EQUIPMENT DAMAGE.

The rating plate is stamped with the model number, type of gas, and gas input rating. Make sure the unit is equipped to operate on the type of gas available.

Inlet Gas Pressure	
Natural	Min. 5.0" W.C., Max. 10.0" W.C.
Propane	Min. 11.0" W.C., Max. 13.0" W.C.

Inlet Gas Pressure Must Not Exceed the Maximum Value Shown in the table above.

The minimum supply pressure must not be varied downward because this could lead to unreliable ignition. In addition, gas input to the burners must not exceed the rated input shown on the rating plate. Overfiring of the unit could result in premature heat exchanger failure.

GAS PIPING

⚠ CAUTION

TO AVOID POSSIBLE UNSATISFACTORY OPERATION OR EQUIPMENT DAMAGE DUE TO UNDERFIRING OF EQUIPMENT, DO NOT UNDERSIZE THE NATURAL GAS/PROPANE PIPING FROM THE METER/TANK TO THE FURNACE. WHEN SIZING A TRUNK LINE PER THE TABLES, INCLUDE ALL APPLIANCES ON THAT LINE THAT COULD BE OPERATED SIMULTANEOUSLY.

PRODUCT DESIGN

The gas pipe supplying the unit must be properly sized based on the cubic feet per hour of gas flow required, specific gravity of the gas and length of the run. The gas line installation must comply with local codes, or in the absence of local codes, with the latest edition of the National Fuel Gas Code ANSI Z223.1.

NATURAL GAS CAPACITY OF PIPE IN CUBIC FEET OF GAS PER HOUR (CFH)

LENGTH OF PIPE IN FEET	NOMINAL BLACK PIPE SIZE				
	1/2"	3/4"	1"	1 1/4"	1 1/2"
10	132	278	520	1050	1600
20	92	190	350	730	1100
30	73	152	285	590	980
40	63	130	245	500	760
50	56	115	215	440	670
60	50	105	195	400	610
70	46	96	180	370	560
80	43	90	170	350	530
90	40	84	160	320	490
100	38	79	150	305	460

$$\text{CFH} = \frac{\text{BTUH FURNACE INPUT}}{\text{CALORIFIC VALUE OF GAS}}$$

CONNECTING THE GAS PIPING - NATURAL GAS

1. Use black iron or steel pipe and fittings for the building piping.
2. Use pipe joint compound on male threads only. Pipe joint compound must be resistant to the action of the fuel used.
3. Use ground joint unions.
4. Install a drip leg to trap dirt and moisture before it can enter the gas valve. The drip leg must be a minimum of three inches long.
5. Use two pipe wrenches when making connection to the gas valve to keep it from turning.
6. Install a manual shut off valve. This shut off valve should be conveniently located within six (6) feet of the unit, and between the meter and unit.
7. Tighten all joints securely.
8. Connect the unit to the building piping by one of the following methods.
   a. Rigid metallic pipe and fittings.
   b. Semi-rigid metallic tubing and metallic fittings. Aluminum alloy tubing shall not be used in exterior locations.
   c. Listed gas appliance connectors used in accordance with the terms of their listing that are completely in the same room as the equipment.

NOTE: In "b" and "c", the connector or tubing must be installed so as to be protected against physical and thermal damage. Aluminum-alloy tubing and connectors must be coated to protect against external corrosion where they are in contact with masonry, plaster, or insulation or are subject to repeated wettings by such liquids as water (except rain water), detergents, or sewage.

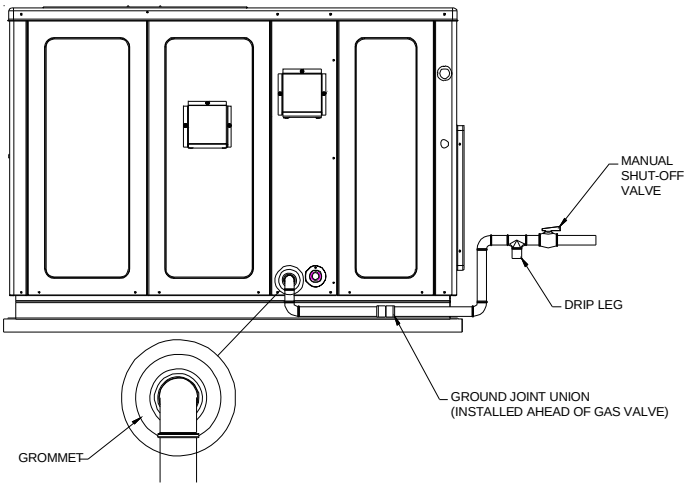

NOTE: The unit gas supply entrance is factory sealed with plugs. Keep plugs in place until gas supply is ready to be installed. Once ready, replace the plugs with the supplied grommets and install gas supply line.

CHECKING THE GAS PIPING

CAUTION

TO AVOID THE POSSIBILITY OF PROPERTY DAMAGE, PERSONAL INJURY OR FIRE, THE FOLLOWING INSTRUCTIONS MUST BE PERFORMED REGARDING GAS CONNECTIONS AND PRESSURE TESTING.

The unit and its gas connections must be leak tested before placing in operation. Because of the danger of explosion or fire, never use a match or open flame to test for leaks. Never exceed specified pressure for testing. Higher pressure may damage the gas valve and cause overfiring which may result in heat exchanger failure.

This unit must be isolated from the gas supply system by closing its individual manual shutoff valve during any pressure testing of the gas supply piping system at test pressures equal to or less than 1/2 PSIG (3.48 kPa).

TANKS AND PIPING - PROPANE UNITS

WARNING

PERSONAL INJURY HAZARD
IRON OXIDE (RUST) CAN REDUCE THE LEVEL OF ODORANT IN PROPANE GAS. A GAS DETECTING DEVICE IS THE ONLY RELIABLE METHOD TO DETECT A PROPANE GAS LEAK. CONTACT YOUR LOCAL PROPANE SUPPLIER ABOUT INSTALLING A GAS DETECTING WARNING DEVICE TO ALERT YOU IN THE EVENT THAT A GAS LEAK SHOULD DEVELOP. FAILURE TO DETECT A PROPANE GAS LEAK COULD RESULT IN AN EXPLOSION OR FIRE WHICH COULD CAUSE SERIOUS PERSONAL INJURY OR DEATH.

PRODUCT DESIGN

All propane gas equipment must conform to the safety standards of the National Board of Fire Underwriters (See NBFU Manual 58) or Natural Standards of Canada B149.2, Installation Code for Propane Gas Burning Appliances and Equipment.

For satisfactory operation, propane gas pressure must be 10 inch W.C. at the unit manifold with all gas appliances in operation. Maintaining proper gas pressure depends on three main factors.

1. Vaporization rate, which depends on (a) temperature of the liquid, and (b) "wetted surface" area of the container or containers.
2. Proper pressure regulation. (Two-stage regulation is recommended from the standpoint of both cost and efficiency.)
3. Pressure drop in lines between regulators, and between second stage regulator and the appliance. Pipe size required will depend on length of pipe run and total load of all appliances.

Complete information regarding tank sizing for vaporization, recommended regulator settings, and pipe sizing is available from most regulator manufacturers and propane gas suppliers.

Propane is an excellent solvent, and special pipe dope must be used when assembling piping for this gas as it will quickly dissolve white lead or most standard commercial compounds. Shellac base compounds resistant to the actions of liquefied petroleum gases such as Gasolac®, Stalactic®, Clyde's or John Crane are satisfactory.

TYPICAL PROPANE PIPING

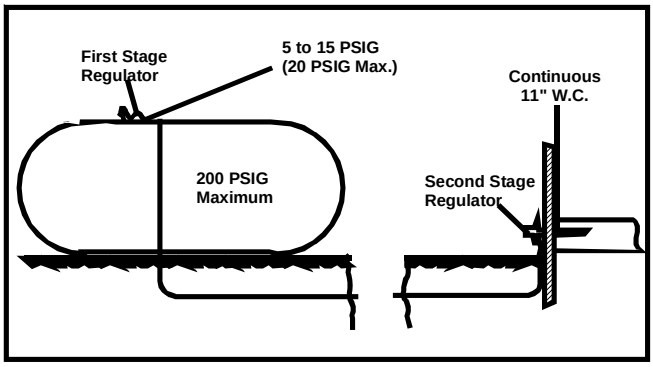

⚠ WARNING

IF YOUR PROPANE GAS APPLIANCE IS INSTALLED IN AN EXCAVATED AREA OR A CONFINED SPACE, WE STRONGLY RECOMMENDED THAT YOU CONTACT YOUR PROPANE SUPPLIER ABOUT INSTALLING A GAS DETECTING WARNING DEVICE THAT WOULD ALERT YOU TO A GAS LEAK.

- **PROPANE GAS IS HEAVIER THAN AIR AND ANY LEAKING GAS CAN SETTLE IN ANY LOW AREAS OR CONFINED SPACES.**
- **PROPANE GAS ODORANT MAY FADE, MAKING THE GAS UNDETECTABLE EXCEPT WITH A WARNING DEVICE.**

AN UNDETECTED GAS LEAK WILL CREATE A DANGER OF EXPLOSION OR FIRE. IF YOU SUSPECT THE PRESENCE OF GAS, FOLLOW THE INSTRUCTIONS ON PAGES 9-11. FAILURE TO DO SO COULD RESULT IN SERIOUS PERSONAL INJURY OR DEATH.

PROPANE TANK SIZING (MINIMUM)

MAXIMUM GAS NEEDED TO VAPORIZE*	TANK SIZE REQUIRED IF LOWEST OUTDOOR TEMPERATURE (AVG. FOR 24 HOURS) REACHES						
	32°F	20°F	10°F	0°F	-10°F	-20°F	-30°F
125K BTU/HR (50 CFH)	115 GAL	115 GAL	115 GAL	250 GAL	250 GAL	400 GAL	600 GAL
250K BTU/HR (100 CFH)	250 GAL	250 GAL	250 GAL	400 GAL	500 GAL	1000 GAL	1500 GAL
375K BTU/HR (150 CFH)	300 GAL	400 GAL	500 GAL	500 GAL	1000 GAL	1500 GAL	2500 GAL
500K BTU/HR (200 CFH)	400 GAL	500 GAL	750 GAL	1000 GAL	1500 GAL	2000 GAL	3500 GAL
750K BTU/HR (300 CFH)	750 GAL	1000 GAL	1500 GAL	2000 GAL	2500 GAL	4000 GAL	5000 GAL

* AVERAGE RATE/HOUR WITHDRAWL IN 8 HOUR PERIOD

PROPANE GAS PIPING CHARTS

Sizing Between First and Second Stage Regulator
Maximum Propane Capacities listed are based on 1 PSIG Pressure Drop at 10 PSIG Setting. Capacities in 1,000 BTU/HR

PIPE OR TUBING LENGTH, FEET	TUBING SIZE, O.D., TYPE L					NOMINAL PIPE SIZE, SCHEDULE 40	
	3/8"	1/2"	5/8"	3/4"	7/8"	1/2"	3/4"
30	309	700	1,303	2,205	3,394	1,843	3,854
40	265	599	1,115	1,887	2,904	1,577	3,298
50	235	531	988	1,672	2,574	1,398	2,923
60	213	481	896	1,515	2,332	1,267	2,649
70	196	446	824	1,394	2,146	1,165	2,437
80	182	412	767	1,297	1,996	1,084	2,267
90	171	386	719	1,217	1,873	1,017	2,127
100	161	365	679	1,149	1,769	961	2,009
150	130	293	546	923	1,421	772	1,613
200	111	251	467	790	1,216	660	1,381
250	90	222	414	700	1,078	585	1,224
300	89	201	378	634	976	530	1,109
350	82	185	345	584	898	488	1,020
400	76	172	321	543	836	454	949

To convert to Capacities at 15 PSIG Settings -- Multiply by 1.130
To convert to Capacities at 5 PSIG Settings -- Multiply by 0.879

PRODUCT DESIGN

Sizing Between Single or Second Stage Regulator and Appliance*
Maximum Propane Capacities Listed are Based on 1/2" W.C. Pressure Drop at 11" W.C. Setting. Capacities in 1,000 BTU/HR

PIPE OR TUBING LENGTH, FEET	TUBING SIZE, O.D., TYPE L					NOMINAL PIPE SIZE, SCHEDULE 40				
	3/8"	1/2"	5/8"	3/4"	7/8"	1/2"	3/4"	1"	1-1/4"	1-1/2"
10	49	110	206	348	539	291	608	1,146	2,353	3,525
20	34	76	141	239	368	200	418	788	1,617	2,423
30	27	61	114	192	296	161	336	632	1,299	1,946
40	23	52	97	164	253	137	284	541	1,111	1,665
50	20	46	86	146	224	122	255	480	985	1,476
60	19	42	78	132	203	110	231	436	892	1,337
80	16	36	67	113	174	94	198	372	764	1,144
100	14	32	59	100	154	84	175	330	677	1,014
125	12	28	52	89	137	74	155	292	600	899
150	11	26	48	80	124	67	141	265	544	815
200	10	22	41	69	106	58	120	227	465	697
250	9	19	36	61	94	51	107	201	412	618
300	8	18	33	55	85	46	97	182	374	560
350	7	16	30	51	78	43	89	167	344	515
400	7	15	28	47	73	40	83	156	320	479

*DATA IN ACCORDANCE WITH NFPA PAMPHLET NO. 54

COOLING

The refrigerant used in the system is R-410A. It is a clear, colorless, non-toxic and non-irritating liquid. R-410A is a 50:50 blend of R-32 and R-125. The boiling point at atmospheric pressure is -62.9°F.

A few of the important principles that make the refrigeration cycle possible are: heat always flows from a warmer to a cooler body. Under lower pressure, a refrigerant will absorb heat and vaporize at a low temperature. The vapors may be drawn off and condensed at a higher pressure and temperature to be used again.

The indoor evaporator coil functions to cool and dehumidify the air conditioned spaces through the evaporative process taking place within the coil tubes.

NOTE: The pressures and temperatures shown in the refrigerant cycle illustrations on the following pages are for demonstration purposes only. Actual temperatures and pressures are to be obtained from the "Expanded Performance Chart".

Liquid refrigerant at condensing pressure and temperatures, (270 PSIG and 122°F), leaves the outdoor condensing coil through the drier and is metered into the indoor coil through the metering device. As the cool, low pressure, saturated refrigerant enters the tubes of the indoor coil, a portion of the liquid immediately vaporizes. It continues to soak up heat and vaporizes as it proceeds through the coil, cooling the indoor coil down to about 48°F.

Heat is continually being transferred to the cool fins and tubes of the indoor evaporator coil by the warm system air. This warming process causes the refrigerant to boil. The heat removed from the air is carried off by the vapor.

As the vapor passes through the last tubes of the coil, it becomes superheated. That is, it absorbs more heat than is necessary to vaporize it. This is assurance that only dry gas will reach the compressor. Liquid reaching the compressor can weaken or break compressor valves.

The compressor increases the pressure of the gas, thus adding more heat, and discharges hot, high pressure superheated gas into the outdoor condenser coil.

In the condenser coil, the hot refrigerant gas, being warmer than the outdoor air, first loses its superheat by heat transferred from the gas through the tubes and fins of the coil. The refrigerant now becomes saturated, part liquid, part vapor and then continues to give up heat until it condenses to a liquid alone. Once the vapor is fully liquefied, it continues to give up heat which subcools the liquid, and it is ready to repeat the cycle.

HEATING

The heating cycle is accomplished by using a unique tubular design heat exchanger which provides efficient gas heating on either natural gas or propane gas fuels. The heat exchangers compact tubular construction provides excellent heat transfer for maximum operating efficiency.

Inshot type gas burners with integral cross lighters are used eliminating the need for adjustable air shutters. The same burner is designed for use on either natural or propane gas fuels.

The induced draft blower draws fuel and combustion air into the burners and heat exchanger for proper combustion. A pressure switch is used in conjunction with the I. D. blower to detect a blocked flue condition.

Blower operation is controlled by the ignition control module. The module allows for field adjustment of the blower delay at the end of the heating cycle. The range of adjustment is for 90, 120, 150 or 180 seconds. The factory delay setting is 30 seconds delay on 150 seconds delay off.

Direct Spark Ignition (DSI) Systems

GPG***M units are equipped with a direct spark ignition system. Ignition is provided by 22,000 volt electronic spark. A flame sensor then monitors for the presence of flame and closes the gas valve if flame is lost.

PCBAG127 IGNITION CONTROL SEQUENCE OF OPERATION

A. Heating Operation: Low stage heat

1. Thermostat type is set to two-stage.
2. Thermostat “W1” input initiates low stage heating.
3. Induced draft blower is energized at high speed for the pre-purge period. Pre-purge timer begins after control recognizes pressure switch has closed.
4. Trial-for-ignition period begins after pre-purge period expires. Low and high stage gas valves are energized along with the igniter for trial-for-ignition period. Igniter is de-energized when flame is detected.
5. Flame is achieved and detected during trial-for-ignition period. Flame stabilization period begins when flame is detected.
6. De-energize high stage gas valve and switch induced draft blower to low speed within five seconds of flame detection.
7. Air circulating blower is energized at low heat speed after heat ON delay time expires. Heat ON delay timer begins when flame is detected.
8. Control monitors thermostat, flame, limit, and pressure switch inputs during low stage heating.
9. Thermostat “W1” input is removed.
10. Low stage gas valve is de-energized.
11. Induced draft blower remains energized at low speed for post purge period.
12. Air circulating blower remains energized at low heat speed for heat OFF delay. Heat OFF delay begins when “W1” input is removed.
13. Control returns to Standby and awaits next thermostat request.

B. Heating Operation: High stage heat

1. Thermostat type is set to two-stage.
2. Thermostat “W1” and “W2” inputs initiate high stage heating.
3. Induced draft blower is energized at high speed for the pre-purge period. Pre-purge timer begins after control recognizes pressure switch has closed.
4. Trial-for-ignition period begins after pre-purge period expires. Low and high stage gas valves are energized along with the igniter for trial-for-ignition period. Igniter is de-energized when flame is detected.
5. Flame is achieved and detected during trial-for-ignition period. Flame stabilization period begins when flame is detected.
6. Gas valve and induced draft blower remain at high stage and high speed.
7. Air circulating blower is energized at high heat speed after heat ON delay time expires. Heat ON delay timer begins when flame is detected.
8. Control monitors thermostat, flame, limit, and pressure switch inputs during high stage heating.
9. Thermostat “W1” and “W2” inputs are removed.
10. High and low stage gas valves are de-energized.
11. Induced draft blower switches from high speed to low speed and remains energized for post purge period.
12. Air circulating blower remains energized at high heat speed for High Stage Heat OFF Delay period then switches to low heat speed for the remainder of the selected heat OFF delay. Heat OFF delay begins when “W1” and “W2” inputs are removed.
13. Control returns to Standby and awaits next thermostat request.

PCBAG127 IGNITION CONTROL SEQUENCE OF OPERATION (CONT.)

A. Cooling Operation: Low stage cool

1. Thermostat type is set to two-stage.
2. Thermostat "Y1" or thermostat "Y1" and "G" input initiates low stage cooling.
3. IDT/ODT/Pressure/Loss of Charge Switch circuits are checked for closed condition. Cooling operation can proceed only if these circuits are closed.
4. Low stage compressor output is energized.
5. Condenser fan motor is energized at low speed.
6. Air circulating blower is energized at low cool speed after cool ON delay expires. Cool ON delay timer begins when thermostat inputs are detected.
7. Control monitors thermostat, gas valve, flame, and IDT/ODT/Pressure/Loss of Charge Switches during low stage cooling.
8. Thermostat "Y1" or "Y1" and "G" inputs are removed.
9. Low stage compressor output is de-energized. Low speed condenser fan motor is de-energized.
10. Air circulating blower remains energized at low cool speed for the cool OFF delay. Cool OFF delay timer begins when thermostat input is removed.
11. Control returns to Standby and awaits next thermostat request.

B. Cooling Operation: High stage cool

Thermostat type is set to two-stage.

Thermostat "Y1" and "Y2" or "Y1", "Y2" and "G" inputs initiate high stage cooling.

IDT/ODT/Pressure/Loss of Charge Switch circuits are checked for closed condition. Cooling operation can proceed only if these circuits are closed.

1. Low and high stage compressor outputs are energized.
2. Condenser fan motor is energized at high speed.
3. Air circulating blower is energized at high cool speed after cool ON delay expires. Cool ON delay timer begins when thermostat inputs are detected.

   Control monitors thermostat, gas valve, flame, and IDT/ODT/Pressure/Loss of Charge Switches during high stage cooling operation.

   Thermostat "Y1" and "Y2" or "Y1", "Y2" and "G" inputs are removed.

   Low and high stage compressor outputs are de-energized.

   High speed condenser fan motor is de-energized.
4. Air circulating blower switches to low cool speed for the cool OFF delay. Cool OFF delay timer begins when thermostat input is removed.

   Control returns to Standby and awaits next thermostat request.

A. Continuous Fan Operation

1. Thermostat "G" input initiates Continuous Fan operation.
2. Air circulation blower shall be immediately energized at the continuous fan speed. For purposes of this specification, the continuous fan speed shall be the low heat speed.
3. Thermostat "G" input is removed.
4. Air circulation blower is immediately de-energized.
5. Control returns to Standby and awaits next thermostat request.

SYSTEM OPERATION

PCBAG127 CONTROL BOARD

DESCRIPTION

The ignition control is designed for use in gas heating/electric cooling package equipment (rooftop applications) and operates with a two stage heat and two stage cooling system. It is a direct spark ignition system that uses a 22,000 volt spark to ignite the burners. A flame sensor is used to monitor the flame.

The board has the option of using a single or two stage thermostat. The board also controls the indoor blower and has an adjustable heat fan off delay.

There is also a fault recall button for recalling the last 5 fault codes. To recall the fault codes, depress the fault recall button for at least 2 seconds but not more than 4 seconds. To clear the fault code memory, depress the fault recall button for at least 5 seconds.

The following tables list the functions for the connectors and terminals, the timings, and the fault codes for the PCBAG127 control board.

WARNING

HIGH VOLTAGE!
Disconnect ALL power before servicing or installing this unit. Multiple power sources may be present. Failure to do so may cause property damage, personal injury or death.

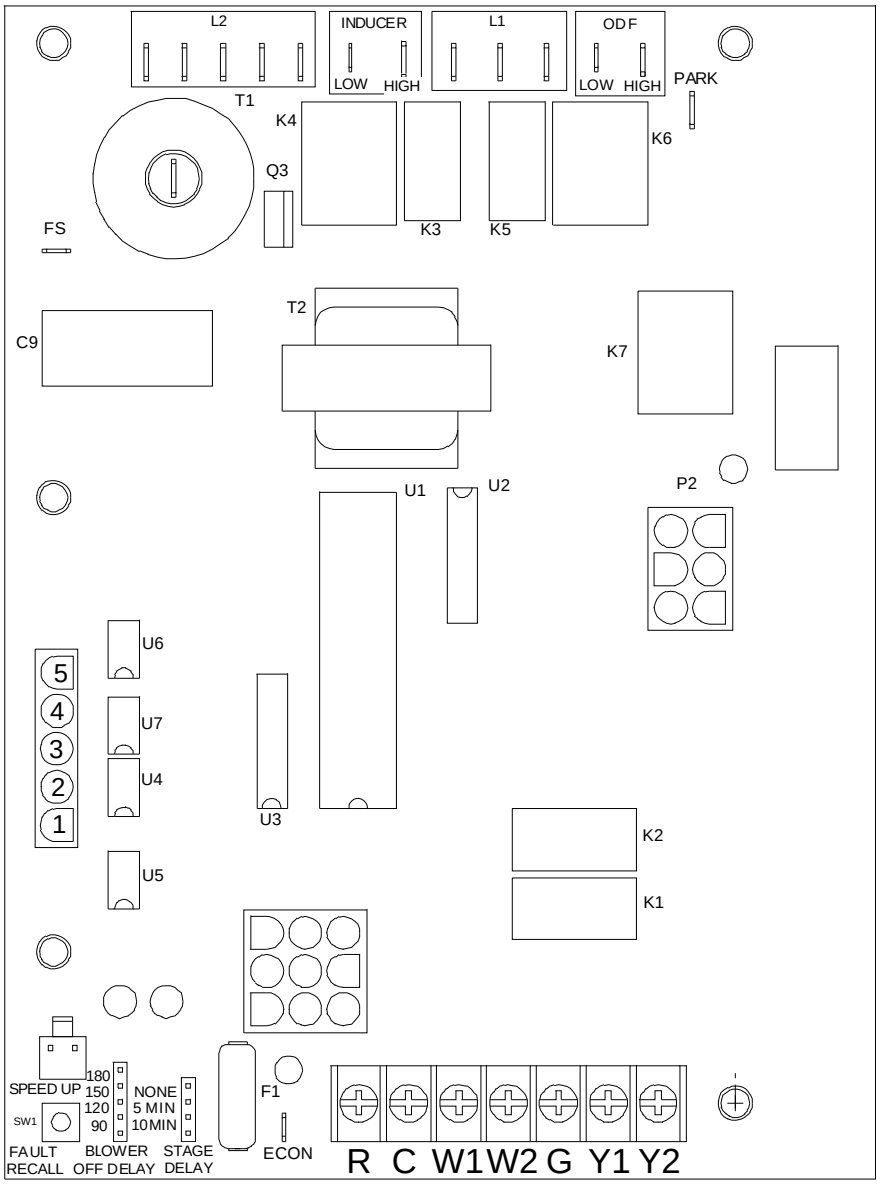

Pin	Voltage	Function
1	24VAC	Indoor/Outdoor Thermostat (IDT/ODT) Output
2	24VAC	High Stage Compressor Output
3	24VAC	Pressure Switch/Loss of Charge Switch Input
4	24VAC	Indoor/Outdoor Thermostat (IDT/ODT) Input
5	24VAC	Pressure Switch/Loss of Charge Switch Output
6	24VAC	Low Stage Compressor Output

Table 1: Circuit Definitions and Voltage Ratings for the 6-Circuit Connector Circuits

Pin	Voltage	Function
1	24VAC	Limit Switch Output
2	24VAC	24VAC Input to Control
3	24VAC	Limit Switch Input
4	24VAC	Unused
5	24VAC	24VAC Common
6	24VAC	Pressure Switch Output
7	24VAC	Main Valve High Output
8	24VAC	Pressure Switch Input
9	Unused	Main Valve Low Output

Table 2: Circuit Definitions and Voltage Ratings for the 9-Circuit Connector Circuits

Terminal	Label
Line Voltage L1	L1
Transformer Line L1	L1
Air Circulating Blower Line 1	L1
Induced Draft Blower Low Speed	DI Low or "Inducer Low"
Induced Draft Blower High Speed	DI High or "Inducer High"
Condenser Fan Motor Low Speed	ODF Low
Condenser Fan Motor High Speed	ODF High
Line Voltage L2	L2
Transformer Line L2	L2
Air Circulating Blower Line 2	L2
Induced Draft Blower Line 2	L2
Condenser Fan Motor Line 2	L2
Direct Spark Igniter	T1
Flame Detection	FS

Table 3: High Voltage Terminals

SYSTEM OPERATION

Period	Timing
Pre-Purge	15 Seconds
Inter-Purge	30 Seconds
Post Purge	30 Seconds
Trial-for-Ignition (TFI)	7 Seconds
Flame Stabilization Period	10 Seconds
Flame Failure Response Time	2 Seconds within Flame Stabilization Period
	2 Seconds or Per ANSI Z21.20 Outside of Flame Stabilization Period
Low to High Stage Delay	Selectable 5 minutes or 10 minutes (Default = 10 minutes)
Heat ON Delay	30 Seconds
Heat OFF Delay	Selectable 90, 120, 150, or 180 Seconds (Default = 150 Seconds)
High Stage Heat OFF Delay	30 Seconds
Cool ON Delay	6 Seconds
Cool OFF Delay	45 Seconds
Continuous Fan ON Delay	0 Seconds
Continuous Fan OFF Delay	0 Seconds
Ignition Attempts	3
Recycles	Infinite
Automatic Restart	60 Minutes
Pressure Switch Lockout Delay	5 Minutes
Factory Test Mode Active Time	2 Minutes Maximum

Table 4: Control Timings

Color	Function	LED Flashes/Status
Red	Normal	On
	Intrnal/Gas Valve Fault	Off
	Lockout	1
	Pressure Switch Stuck Open	2
	Pressure Switch Stuck Closed	3
	Open High Temperature Limit	4
	Flame Detected with Gas Valve De-Energized	5
	Compressor Short Cycle Delay Active	6
	Limit Opened 5 Times in Same Call For Heat	7
	Indoor Thermostat/Outdoor Thermostat is Open	8
	Pressure Switch/Loss of Charge Switch is Open	9
Amber	Normal Flame	On
	No Flame Present	Off
	Low Flame Current	1
	Flame Detected with Gas Valve De-energized	2

Table 5: LED Status Codes and Corresponding System Condition

SYSTEM OPERATION

Typical Package Cooling or Package Gas

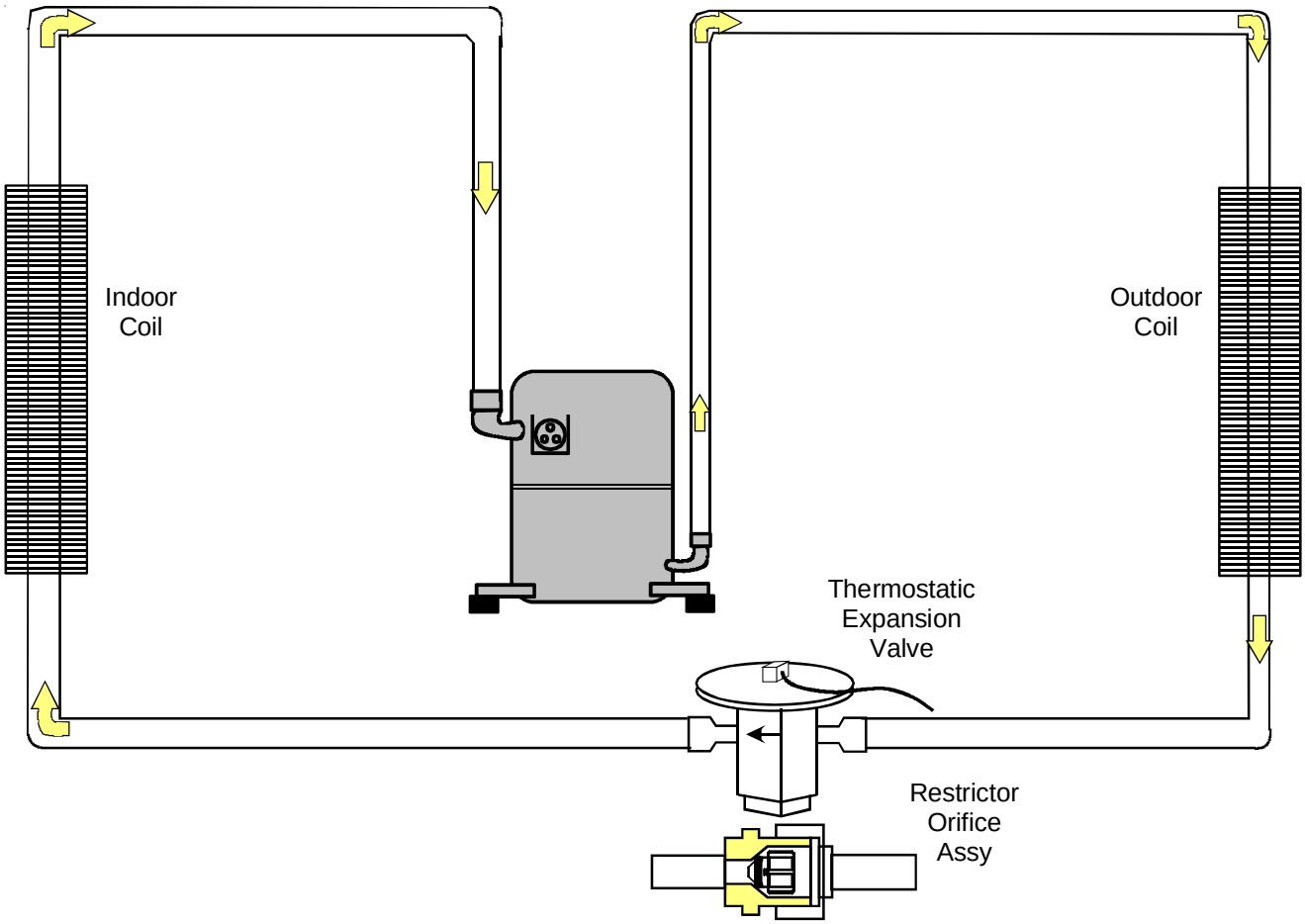

Either a thermostatic expansion valve or restrictor orifice assembly may be used depending on model, refer to the parts catalog for the model being serviced.

Restrictor Orifice Assembly in Cooling Operation

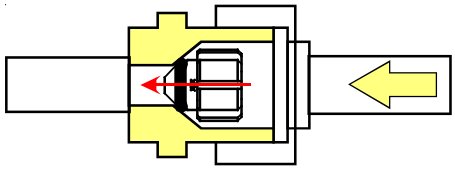

In the cooling mode the orifice is pushed into its seat forcing refrigerant to flow through the metered hole in the center of the orifice.

SCHEDULED MAINTENANCE

Package gas units require regularly scheduled maintenance to preserve high performance standards, prolong the service life of the equipment, and lessen the chances of costly failure.

In many instances the owner may be able to perform some of the maintenance; however, the advantage of a service contract, which places all maintenance in the hands of a trained serviceman, should be pointed out to the owner.

WARNING

HIGH VOLTAGE!
Disconnect ALL power before servicing or installing this unit. Multiple power sources may be present. Failure to do so may cause property damage, personal injury or death.

ONCE A MONTH

1. Inspect the return filters of the evaporator unit and clean or change if necessary. **NOTE:** Depending on operation conditions, it may be necessary to clean or replace the filters more often. If permanent type filters are used, they should be washed with warm water and dried.
2. When operating on the cooling cycle, inspect the condensate line piping from the evaporator coil. Make sure the piping is clear for proper condensate flow.

ONCE A YEAR
QUALIFIED SERVICE PERSONNEL ONLY

1. Clean the indoor and outdoor coils.
2. Clean the cabinet inside and out.
3. Motors are permanently lubricated and do not require oiling. TO AVOID PREMATURE MOTOR FAILURE, DO NOT OIL.
4. Manually rotate the outdoor fan and indoor blower to be sure they run freely.
5. Inspect the control panel wiring, compressor connections, and all other component wiring to be sure all connections are tight. Inspect wire insulation to be certain that it is good.
6. Check the contacts of the compressor contactor. If they are burned or pitted, replace the contactor.
7. Using a halide or electronic leak detector, check all piping and etc. for refrigerant leaks.
8. Check the combustion chamber (Heat Exchanger) for soot, scale, etc. Inspect all burners for lint and proper positioning.
9. Start the system, using the proper instrumentation check gas inlet and manifold pressures, burner flame and microamp signal. Adjust if necessary.
10. Start the system and run a Heating Performance Test. If the results of the test are not satisfactory, see the "Service Problem Analysis" Guide for the possible cause.

TEST EQUIPMENT

Proper test equipment for accurate diagnosis is as essential as regular hand tools.

The following is a must for every service technician and service shop:

1. Thermocouple type temperature meter - measure dry bulb temperature.
2. Sling psychrometer - measure relative humidity and wet bulb temperature.
3. Amprobe - measure current.
4. Volt-Ohm Meter - testing continuity, capacitors, motor windings and voltage.
5. Accurate Leak Detector - testing for refrigerant leaks.
6. High Vacuum Pump - evacuation.
7. Electric Vacuum Gauge, Manifold Gauges and high vacuum hoses - to measure and obtain proper vacuum.
8. Accurate Charging Cylinder or Electronic Scale - measure proper refrigerant charge.
9. Inclined Manometer - measure static pressure and pressure drop across coils.

Other recording type instruments can be essential in solving abnormal problems, however, in many instances they may be rented from local sources.

Proper equipment promotes faster, more efficient service, and accurate repairs with less call backs.

HEATING PERFORMANCE TEST

Before attempting to diagnose an operating fault, run a Heating Performance Test and apply the results to the Service Problem Analysis Guide.

To conduct a heating performance test, the BTU input to the package gas unit must be calculated.

After the heating cycle has been in operation for at least fifteen minutes and with all other gas appliances turned off, the gas meter should be clocked.

To find the BTU input, multiply the number of cubic feet of gas consumed per hour by the heating value of the gas being used. (The calorific value of the gas being used is found by contacting your local utility.)

SCHEDULED MAINTENANCE

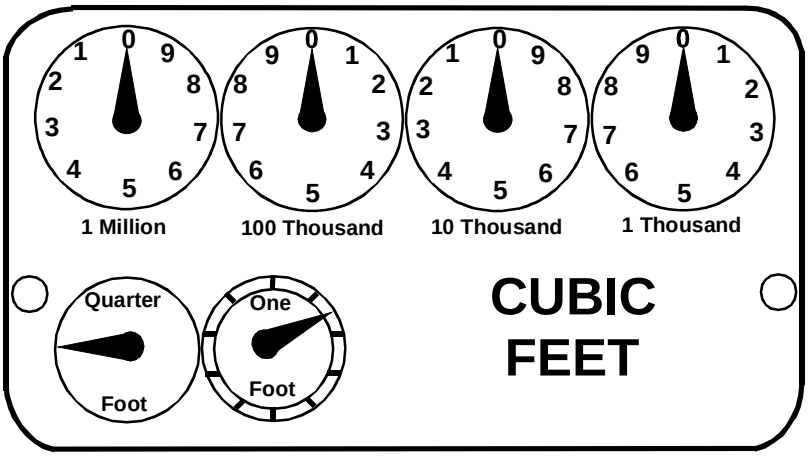

GAS RATE -- CUBIC FEET PER HOUR

Seconds for One Revolution	Size of Test Dial 1/4 cu/ft	1/2 cu/ft	1 cu/ft	2 cu/ft	5 cu/ft	Seconds for One Revolution	Size of Test Dial 1/4 cu/ft	1/2 cu/ft	1 cu/ft	2 cu/ft	5 cu/ft
10	90	180	360	720	1800	36	25	50	100	200	500
11	82	164	327	655	1636	37	--	--	97	195	486
12	75	150	300	600	1500	38	23	47	95	189	474
13	69	138	277	555	1385	39	--	--	92	185	462
14	64	129	257	514	1286	40	22	45	90	180	450
15	60	120	240	480	1200	41	--	--	--	176	439
16	56	113	225	450	1125	42	21	43	86	172	429
17	53	106	212	424	1059	43	--	--	--	167	419
18	50	100	200	400	1000	44	--	41	82	164	409
19	47	95	189	379	947	45	20	40	80	160	400
20	45	90	180	360	900	46	--	--	78	157	391
21	43	86	171	343	857	47	19	38	76	153	383
22	41	82	164	327	818	48	--	--	75	150	375
23	39	78	157	313	783	49	--	--	--	147	367
24	37	75	150	300	750	50	18	36	72	144	360
25	36	72	144	288	720	51	--	--	--	141	355
26	34	69	138	277	692	52	--	--	69	138	346
27	33	67	133	265	667	53	17	34	--	136	340
28	32	64	129	257	643	54	--	--	67	133	333
29	31	62	124	248	621	55	--	--	--	131	327
30	30	60	120	240	600	56	16	32	64	129	321
31	--	--	116	232	581	57	--	--	--	126	316
32	28	56	113	225	563	58	--	31	62	124	310
33	--	--	109	218	545	59	--	--	--	122	305
34	26	53	106	212	529	60	15	30	60	120	300
35	--	--	103	206	514						

SCHEDULED MAINTENANCE

Example:

It takes forty-five (45) seconds on the gas meter for the hand on the cubic foot dial to make one complete revolution, with all appliances off, except the unit. Using the gas rate chart, observe the forty-five (45) seconds, locate and read across to the one (1) cubic foot dial column. There you will find the number 80, which shows that eighty (80) cubic feet of gas will be consumed in one (1) hour.

Let's assume the local gas utility has stated that the calorific value of the gas is 1025 BTU per cubic foot.

Multiplying the eighty (80) cubic feet by 1025 BTU/ft^3 gives us an input of 82,000 BTU/HR.

Checking the BTU input on the rating plate of the unit being tested.

EXAMPLE: GPG1460120M4E**

INPUT: 80,000 BTU/HR

OUTPUT CAP: 63,400 BTU/HR

Should the figure you calculated not fall within five (5) percent of the nameplate rating of the unit, adjust the gas valve pressure regulator or resize orifices. **In no case should the input exceed that shown on the rating plate.**

⚠ CAUTION

ALWAYS CONNECT A MANOMETER TO THE 1/8" PIPE TAP AT THE GAS VALVE BEFORE ADJUSTING THE PRESSURE REGULATOR. IN NO CASE SHOULD THE FINAL MANIFOLD PRESSURE VARY MORE THAN PLUS OR MINUS .3 INCHES WATER COLUMN FROM 3.5 INCHES WATER COLUMN FOR NATURAL GAS OR 10 INCHES WATER COLUMN FOR PROPANE GAS.

To adjust the pressure regulator on the gas valve, turn down (clockwise) to increase pressure and input, and out (counter-clockwise) to decrease pressure and input.

Since propane gas is not normally installed with a gas meter, clocking will be virtually impossible. The gas orifices used with propane are calculated for 2500 BTU gas per cubic foot and with proper inlet pressures and correct piping size, full capacity will be obtained.

With propane gas, no unit gas valve regulator is used; however, the second stage supply line pressure regulator should be adjusted to give 11" water column with all other gas consuming appliances running.

The dissipation of the heat transferred to the heat exchanger is now controlled by the amount of air circulated over its surface.

The flow rate (CFM) of air circulated is governed by the external static pressure in inches of water column of duct work, cooling coil, registers and etc., applied externally to the unit versus the motor speed tap.

A properly operating unit must have the BTU input and flow rate (CFM) of air, within the limits shown to prevent short cycling of the equipment. As the external static pressure goes up, the temperature rise will also increase. Consult the proper tables for temperature rise limitation.

SERVICING

COOLING ANALYSIS CHART

Complaint	No Cooling							Unsatisfactory Cooling					System Operating Pressures				Test Method Remedy	See Service Procedure Ref.
POSSIBLE CAUSE DOTS IN ANALYSIS GUIDE INDICATE "POSSIBLE CAUSE" SYMPTOM	System will not start	Compressor will not start - fan runs	Comp. and Cond. Fan will not start	Evaporator fan will not start	Condenser fan will not start	Compressor runs - goes off on overload	Compressor cycles on overload	System runs continuously - little cooling	Too cool and then too warm	Not cool enough on warm days	Certain areas too cool, others too warm	Compressor is noisy	Low suction pressure	Low head pressure	High suction pressure	High head pressure		
Power Failure	●																Test Voltage	S-1
Blown Fuse	●		●	●													Inspect Fuse Size & Type	S-4
Loose Connection	●			●		●											Inspect Connection - Tighten	S-2
Shorted or Broken Wires	●	●	●	●	●	●											Test Circuits With Ohmmeter	S-3
Open Overload		●		●	●												Test Continuity of Overload	S-17A
Faulty Thermostat	●			●					●	●							Test continuity of Thermostat & Wiring	S-3
Faulty Transformer	●		●														Check control circuit with voltmeter	S-4
Shorted or Open Capacitor		●			●	●											Test Capacitor	S-15
Shorted or Grounded Compressor		●				●											Test Motor Windings	S-17B
Compressor Stuck	●					●											Use Test Cord	S-17D
Faulty Compressor Contactor	●	●			●	●											Test continuity of Coil & Contacts	S-7, S-8
2nd Stage Compressor Not Energized								●		●				●	●		Test Unloader Solenoid (2 stage compressor only)	S-17C
Faulty Ignition Control				●													Test Ignition Control	S-313
Open Control Circuit				●													Test Control Circuit with Voltmeter	S-4
Low Voltage		●				●	●										Test Voltage	S-1
Faulty Evap. Fan Motor				●									●				Repair or Replace	S-16
Shorted or Grounded Fan Motor					●											●	Test Motor Windings	S-16
Improper Cooling Anticipator							●		●								Check resistance of Anticipator	S-3
Shortage of Refrigerant							●	●					●	●			Test For Leaks, Add Refrigerant	S-103
Restricted Liquid Line							●	●					●	●			Replace Restricted Part	S-112
Dirty Air Filter								●		●	●		●				Inspect Filter-Clean or Replace	
Dirty Indoor Coil								●		●	●		●				Inspect Coil - Clean	
Not enough air across Indoor Coil								●		●	●		●				Speed Blower, Check Duct Static Press	S-200
Too much air across Indoor Coil															●		Reduce Blower Speed	S-200
Overcharge of Refrigerant						●	●					●			●	●	Recover Part of Charge	S-113
Dirty Outdoor Coil						●	●			●						●	Inspect Coil - Clean	
Noncondensibles							●			●						●	Recover Charge, Evacuate, Recharge	S-114
Recirculation of Condensing Air							●			●						●	Remove Obstruction to Air Flow	
Infiltration of Outdoor Air								●		●	●						Check Windows, Doors, Vent Fans, Etc.	
Improperly Located Thermostat						●			●								Relocate Thermostat	
Air Flow Unbalanced									●		●						Readjust Air Volume Dampers	
System Undersized								●		●							Refigure Cooling Load	
Broken Internal Parts												●					Replace Compressor	
Inefficient Compressor								●						●	●		Test Compressor Efficiency	S-104
High Pressure Control Open			●														Reset And Test Control	S-12
Unbalanced Power, 3PH		●				●	●										Test Voltage	
Wrong Type Expansion Valve						●	●	●		●			●	●			Replace Valve	
Expansion Device Restricted						●	●	●		●			●	●			Remove restriction or replace expansion device	
Expansion Valve Bulb Loose												●					Tighten Bulb Bracket	
Inoperative Expansion Valve						●		●					●				Check Valve Operation	S-110
Loose Hold-down Bolts												●					Tighten Bolts	

SERVICING

GAS HEATING ANALYSIS CHART

Complaint		No Heat			Unsatisfactory Heat							
POSSIBLE CAUSE **DOTS IN ANALYSIS GUIDE INDICATE "POSSIBLE CAUSE"**	**SYMPTOM**	System Will Not Start	Burner Won't Ignite	Burner Ignites-Locks Out	Burner Shuts Off prior to T'Stat being Satasfie	Short Cycles	Long Cycles	Soot and /or Fumes	To Much Heat	Not Enough Heat	**Test Method Remedy**	**See Service Procedure Reference**
Pow er Failure		●									Test Voltage	S-1
Blow n Fuse		●									Test Voltage	S-4
Loose Connection		●									Check Wiring	S-2
Shorted or Broken Wires		●									Check Wiring	S-3
No Low Voltage		●									Check Transformer	S-4
Faulty Thermostat		●				●	●		●		Check Thermostat	S-3
Faulty Transformer		●									Check Transformer	S-4
Poor or High Resistance Ground				●							Measure Ground Resistance	S-313
Improper Heat Anticipator Setting						●	●		●	●	Adjust Heat Anticipator Setting	S-3
Improper Thermostat Location						●	●		●	●	Relocate Thermostat	
Faulty Limit or Roll Out Sw itch			●		●					●	Test Control	S-300,S-301,S-302
Faulty Flame Sensor				●							Test Flame Sensor	S-314
Faulty Ignition Control		●	●	●							Test Control	S-313
Gas Valve or Gas Supply Shut Off			●								Turn Valves to On Position	S-304
Faulty Induced Draft Blow er		●	●					●			Test Blow er	S-303
Dirty Flame Sensor, Low uA				●							Clean Flame Sensor	S-314
Flame Sensor not in Flame, Low uA				●							Test/Adjust Position of Flame Sensor	S-314
Faulty Gas Valve			●					●		●	Replace Gas Valve	S-304
No High Stage Heat (2 Stage Only)							●			●	Check Thermostat, Control, Gas Valve	S-3,S-313,S-304
Open Auxillary Limit			●		●						Reset Control	S-301
Improper Air Flow or Distribution					●					●	Check Duct Static	
Locking out on Main Limit				●	●					●	Check Controls, Gas Press., & Temp. Rise	S-300
Delayed Ignition								●			Test for Delayed Ignition	S-308
Flashback								●			Test for Flashback	S-309
Orifice Size								●	●	●	Check Orifices	S-306
Gas Pressure			●					●	●	●	Check Gas Pressure	S-307
Cracked Heat Exchanger								●			Check Burner Flames	S-302
Stuck Gas Valve			●					●	●		Replace Gas Valve	S-304
Furnace Undersized										●	Replace w ith Proper Size Furnace	
Faulty Pressure Sw itch			●	●	●						Test Pressure Sw itch	S-310
Blocked or Restricted Flue								●			Check Flue/Draw dow n Pressure	S-310
Open Roll Out Sw itch			●	●							Test Control	S-302
Bouncing On Pressure Sw itch				●						●	Test Negative Pressure	S-310

SERVICING

Table of Contents

S-1 Checking Voltage 26
S-2 Checking Wiring 27
S-3 Checking Thermostat, Wiring & Anticipator .. 27
S-3A Thermostat & Wiring 27
S-3B Cooling Anticipator 27
S-3C Heating Anticipator 27
S-4 Checking Transformer & Control Circuit 28
S-7 Checking Contactor and/or Relays 28
S-8 Checking Contactor Contacts 28
S-9 Checking Fan Relay Contact 28
S-12 Checking High Pressure Control 29
S-13 Checking Low Pressure Control 29
S-15 Checking Capacitor 29
S-15A Resistance Check 30
S-15B Capacitance Check 30
S-16A Checking Fan & Blower Motor Windings (PSC Motors) 30
S-16C Checking ECM Motor Windings 31
S-16D Checking EEM Motors 31
S-17 Checking Compressor Windings 32
S-17A Resistance Test 32
S-17B Ground Test 33
S-17D Operation Test 33
S-18 Testing Crankcase Heater (optional item) 33
S-100 Refrigeration Repair Practice 34
S-101 Leak Testing 34
S-102 Evacuation 34
S-103 Charging 35
S-104 Checking Compressor Efficiency 36
S-105B Thermostatic Expansion Valve 36
S-106 Overfeeding 36
S-107 Underfeeding 36
S-108 Superheat 36
S-109 Checking Subcooling 38
S-110 Checking Expansion Valve Operation 38
S-111 Fixed Orifice Restriction Devices 38
S-112 Checking Restricted Liquid Line 40
S-113 Refrigerant Overcharge 40
S-114 Non-condensables 40
S-115 Compressor Burnout 40
S-200 Checking Extedrnal Static Pressure 41
S-201 Checking Temperature Rise 41
S-300 Testing Primary Limit 42
S-301 Testing Auxiliary Limit 42
S-302 Checking Flame Rollout Switch 43
S-303 Testing Inducer Motor 44
S-304 Testing Gas Valve 44
S-305 Checking Main Burners 45
S-306 Checking Orifices 45
S-307 Checking Gas Pressure 46
S-308 Checking For Delayed Ignition 47
S-309 Checking for Flashback 47
S-310 Checking Pressure Control 47
S-311 High Altitude Application 48
S-313 Testing Ignition Control Module 48
S-314 Checking Flame Sensor 49

WARNING

HIGH VOLTAGE!
Disconnect ALL power before servicing or installing this unit. Multiple power sources may be present. Failure to do so may cause property damage, personal injury or death.

SERVICING

S-1 CHECKING VOLTAGE

WARNING

HIGH VOLTAGE!
Disconnect ALL power before servicing or installing this unit. Multiple power sources may be present. Failure to do so may cause property damage, personal injury or death.

1. Remove doors, control panel cover, etc. from unit being tested.

With power ON:

WARNING

Line Voltage now present.

2. Using a voltmeter, measure the voltage across terminals L1 and L2 of the contactor for single phase units, and L3, for 3 phase units.
3. No reading - indicates open wiring, open fuse(s) no power or etc. from unit to fused disconnect service. Repair as needed.
4. With ample voltage at line voltage connectors, energize the unit.
5. Measure the voltage with the unit starting and operating, and determine the unit Locked Rotor Voltage.

   Locked Rotor Voltage is the actual voltage available at the compressor during starting, locked rotor, or a stalled condition. Measured voltage should be above minimum listed in chart below.

   To measure Locked Rotor Voltage attach a voltmeter to the run "R" and common "C" terminals of the compressor, or to the T_1 and T_2 terminals of the contactor. Start the unit and allow the compressor to run for several seconds, then shut down the unit. Immediately attempt to restart the unit while measuring the Locked Rotor Voltage.
6. Voltmeter should read within the voltage tabulation as shown. If the voltage falls below the minimum voltage, check the line wire size. Long runs of undersized wire can cause low voltage. If wire size is adequate, notify the local power company in regards to either low or high voltage.

Unit Supply Voltage		
Voltage	Min.	Max.
400	360	440

Three phase units require a balanced 3 phase power supply to operate. If the percentage of voltage imbalance exceeds 3% the unit must not be operated until the voltage condition is corrected.

$$\text{\% Voltage Imbalance} = \frac{\text{Max. Voltage Deviation From Average Voltage}}{\text{Average Voltage}} \times 100$$

To find the percentage of imbalance, measure the incoming power supply.

L1 - L2 = 240V
L1 - L3 = 232V
L2 - L3 = 238V
Total 710V

$$\text{Avg. V} = \frac{710}{3} = \mathbf{236.7}$$

To find Max. deviation:
240 - 236.7 = +3.3
232 - 236.7 = **-4.7**
238 - 236.7 = +1.3

Max deviation was 4.7V

$$\text{\% Voltage Imbalance} = \frac{4.7}{236.7} = \mathbf{1.99\%}$$

If the percentage of imbalance had exceeded 3%, it must be determined if the imbalance is in the incoming power supply or the equipment. To do this rotate the legs of the incoming power and retest voltage as shown below.

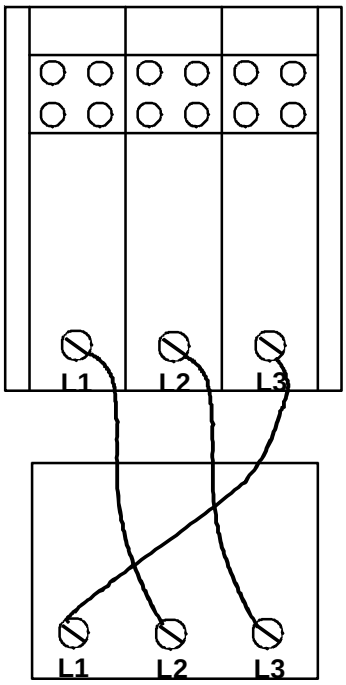

L1 - L2 = 240V
L1 - L3 = 227V
L2 - L3 = 238V

Rotate all 3 incoming legs as shown.

L1 - L2 = 227V
L1 - L3 = 238V
L2 - L3 = 240V

By the voltage readings we see that the imbalance rotated or traveled with the switching of the incoming legs. Therefore the imbalance lies within the incoming power supply.

If the imbalance had not changed then the problem would lie within the equipment. Check for current leakage, shorted motors, etc.

SERVICING

S-2 CHECKING WIRING

WARNING

HIGH VOLTAGE!
Disconnect ALL power before servicing or installing this unit. Multiple power sources may be present. Failure to do so may cause property damage, personal injury or death.

1. Check wiring visually for signs of overheating, damaged insulation and loose connections.
2. Use an ohmmeter to check continuity of any suspected open wires.
3. If any wires must be replaced, replace with comparable gauge and insulation thickness.

S-3 CHECKING THERMOSTAT, WIRING, AND ANTICIPATOR

THERMOSTAT WIRE SIZING CHART	
LENGTH OF RUN	MIN. COPPER WIRE GAUGE (AWG)
25 feet	18
50 feet	16
75 feet	14
100 feet	14
125 feet	12
150 feet	12

S-3A THERMOSTAT AND WIRING

WARNING

Line Voltage now present.

With power ON, thermostat calling for cooling

1. Use a voltmeter to check for 24 volts at thermostat wires C and Y in the condensing unit control panel.
2. No voltage indicates trouble in the thermostat, wiring or external transformer source.
3. Check the continuity of the thermostat and wiring. Repair or replace as necessary.

Indoor Blower Motor

With power ON:

WARNING

Line Voltage now present.

1. Set fan selector switch at thermostat to "ON" position.
2. With voltmeter, check for 24 volts at wires C and G.
3. No voltage indicates the trouble is in the thermostat or wiring.
4. Check the continuity of the thermostat and wiring. Repair or replace as necessary.

S-3B COOLING ANTICIPATOR

The cooling anticipator is a small heater (resistor) in the thermostat. During the "off" cycle, it heats the bimetal element helping the thermostat call for the next cooling cycle. This prevents the room temperature from rising too high before the system is restarted. A properly sized anticipator should maintain room temperature within 1 1/2 to 2 degree range.

The anticipator is supplied in the thermostat and is not to be replaced. If the anticipator should fail for any reason, the thermostat must be changed.

S-3C HEATING ANTICIPATOR

The heating anticipator is a wire-wound adjustable heater, which is energized during the "ON" cycle to help prevent overheating of the conditioned space.

The anticipator is a part of the thermostat and if it should fail for any reason, the thermostat must be replaced. See the following for recommended heater anticipator setting.

To determine the proper setting, use an ammeter to measure the current on the "W" wire going to the thermostat.

Use an amprobe as shown below. Wrap 10 turns of thermostat wire around the stationary jaw of the amprobe and divide the reading by 10.

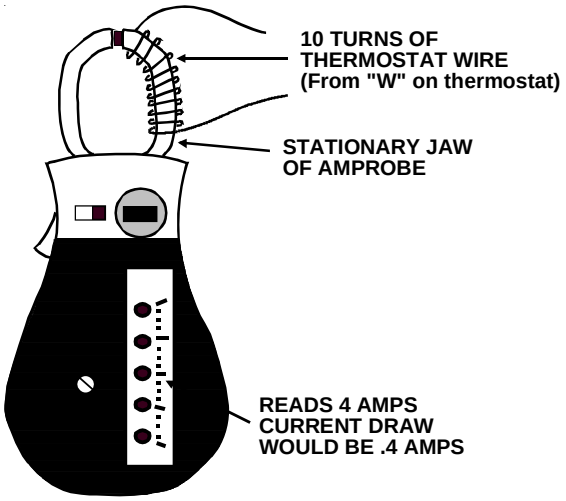

Checking Heat Anticipator Amp Draw

SERVICING

S-4 CHECKING TRANSFORMER AND CONTROL CIRCUIT

WARNING

HIGH VOLTAGE!
Disconnect ALL power before servicing or installing this unit. Multiple power sources may be present. Failure to do so may cause property damage, personal injury or death.

A step-down transformer (380/415 volt primary to 24 volt secondary and 380/415 volt primary to 230 volt secondary) is provided with each indoor unit. This allows ample capacity for use with resistance heaters. The outdoor sections do not contain a transformer.

WARNING

Disconnect ALL power before servicing.

1. Remove control panel cover, or etc., to gain access to transformer.

With power ON:

WARNING

Line Voltage now present.

2. Using a voltmeter, check voltage across secondary voltage side of transformer (R to C).
3. No voltage indicates faulty transformer, bad wiring, or bad splices.
4. Check transformer primary voltage at incoming line voltage connections and/or splices.
5 If line voltage available at primary voltage side of transformer and wiring and splices good, transformer is inoperative. Replace.

S-7 CHECKING CONTACTOR AND/OR RELAYS

WARNING

HIGH VOLTAGE!
Disconnect ALL power before servicing or installing this unit. Multiple power sources may be present. Failure to do so may cause property damage, personal injury or death.

The compressor contactor and other relay holding coils are wired into the low or line voltage circuits. When the control circuit is energized, the coil pulls in the normally open contacts or opens the normally closed contacts. When the coil is de-energized, springs return the contacts to their normal position.

NOTE*: Most single phase contactors break only one side of the line (L1), leaving 115 volts to ground present at most internal components.*

1. Remove the leads from the holding coil.
2. Using an ohmmeter, test across the coil terminals.

If the coil does not test continuous, replace the relay or contactor.

S-8 CHECKING CONTACTOR CONTACTS

THREE PHASE

Using a voltmeter, test across terminals.

A. L1-L2, L1-L3, and L2-L3 - If voltage is present, proceed to B. If voltage is not present, check breaker or fuses on main power supply.

B. T1-T2, T1-T3, and T2-T3 - If voltage readings are not the same as in "A", replace contactor.

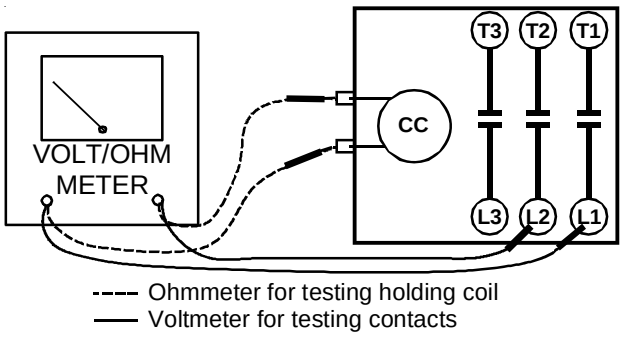

TESTING COMPRESSOR CONTACTOR (ThreePhase)

S-9 CHECKING FAN RELAY CONTACTS

The fan relays are incorporated into the control board. See section S-313 for checking control board.

SERVICING

S-12 CHECKING HIGH PRESSURE CONTROL

WARNING

HIGH VOLTAGE!
Disconnect ALL power before servicing or installing this unit. Multiple power sources may be present. Failure to do so may cause property damage, personal injury or death.

The high pressure control senses the pressure in the liquid line. If abnormally high condensing pressures develop, the contacts of the control open, breaking the control circuit before the compressor motor overloads. This control is automatically reset.

1. Using an ohmmeter, check across terminals of high pressure control, with wire removed. If not continuous, the contacts are open.
3. Attach a gauge to the dill valve port on the base valve.

With power ON:

WARNING

Line Voltage now present.

4. Start the system and place a piece of cardboard in front of the condenser coil, raising the condensing pressure.
5. Check pressure at which the high pressure control cuts-out.

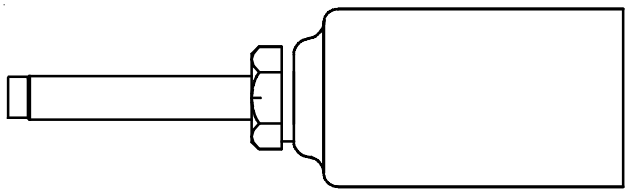

If it cuts-out at 660 PSIG ± 10 PSIG, it is operating normally (See causes for high head pressure in Service Problem Analysis Guide). If it cuts out below this pressure range, replace the control. The control should reset at 420 PSIG ± 25 PSIG.

S-13 CHECKING LOW PRESSURE CONTROL

The low pressure control senses the pressure in the suction line and will open its contacts on a drop in pressure. The low pressure control will automatically reset itself with a rise in pressure.

The low pressure control is designed to cut-out (open) at approximately 55 PSIG ± 7 PSIG. It will automatically cut-in (close) at approximately 95 PSIG ± 7 PSIG.

Test for continuity using a VOM and if not as above, replace the control.

S-15 CHECKING CAPACITOR

CAPACITOR, RUN

A run capacitor is wired across the auxiliary and main windings of a single phase permanent split capacitor motor. The capacitors primary function is to reduce the line current while greatly improving the torque characteristics of a motor. This is accomplished by using the 90° phase relationship between the capacitor current and voltage in conjunction with the motor windings so that the motor will give two phase operation when connected to a single phase circuit. The capacitor also reduces the line current to the motor by improving the power factor.

CAPACITOR, START

SCROLL COMPRESSOR MODELS

Hard start components are not required on Scroll compressor equipped units due to a non-replaceable check valve located in the discharge line of the compressor. However hard start kits are available and may improve low voltage starting characteristics.

This check valve closes off high side pressure to the compressor after shut down allowing equalization through the scroll flanks. Equalization requires only about one or two seconds during which time the compressor may turn backwards.

Your unit comes with a 180-second anti-short cycle to prevent the compressor from starting and running backwards.

MODELS EQUIPPED WITH A HARD START DEVICE

A start capacitor is wired in parallel with the run capacitor to increase the starting torque. The start capacitor is of the electrolytic type, rather than metallized polypropylene as used in the run capacitor.

A switching device must be wired in series with the capacitor to remove it from the electrical circuit after the compressor starts to run. Not removing the start capacitor will overheat the capacitor and burn out the compressor windings.

These capacitors have a 15,000 ohm, 2 watt resistor wired across its terminals. The object of the resistor is to discharge the capacitor under certain operating conditions, rather than having it discharge across the closing of the contacts within the switching device such as the Start Relay, and to reduce the chance of shock to the servicer. See the Servicing Section for specific information concerning capacitors.

RELAY, START

A potential or voltage type relay is used to take the start capacitor out of the circuit once the motor comes up to speed. This type of relay is position sensitive. The normally closed contacts are wired in series with the start capacitor and the relay holding coil is wired parallel with the start winding. As the motor starts and comes up to speed, the increase in voltage across the start winding will energize the start relay holding coil and open the contacts to the start capacitor.

Two quick ways to test a capacitor are a resistance and a capacitance check.

SERVICING

S-15A RESISTANCE CHECK

WARNING

HIGH VOLTAGE!
Disconnect ALL power before servicing or installing this unit. Multiple power sources may be present. Failure to do so may cause property damage, personal injury or death.

1. Discharge capacitor and remove wire leads.

WARNING

Discharge capacitor through a 20 to 30 OHM resistor before handling.

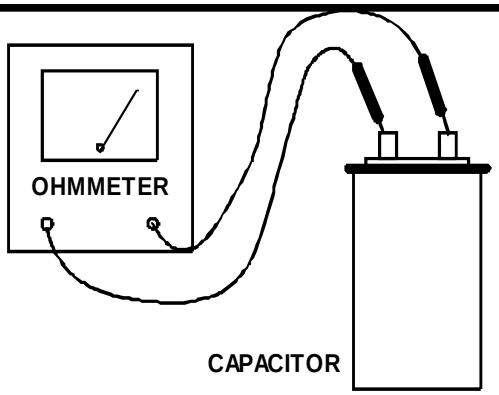

TESTING CAPACITOR RESISTANCE

2. Set an ohmmeter on its highest ohm scale and connect the leads to the capacitor -
   a. Good Condition - indicator swings to zero and slowly returns to infinity. (Start capacitor with bleed resistor will not return to infinity. It will still read the resistance of the resistor).
   b. Shorted - indicator swings to zero and stops there -replace.
   c. Open - no reading - replace. (Start capacitor would read resistor resistance.)

S-15B CAPACITANCE CHECK

Using a hookup as shown below, take the amperage and voltage readings and use them in the formula:

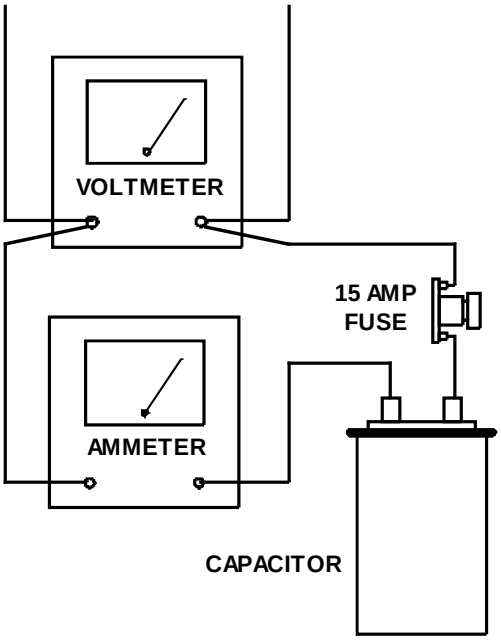

TESTING CAPACITANCE

WARNING

Discharge capacitor through a 20 to 30 OHM resistor before handling.

$$\text{Capacitance (MFD)} = \frac{2650 \times \text{Amperage}}{\text{Voltage}}$$

S-16A CHECKING FAN AND BLOWER MOTOR WINDINGS (PSC MOTORS)

The auto reset fan motor overload is designed to protect the motor against high temperature and high amperage conditions by breaking the common circuit within the motor, similar to the compressor internal overload. However, heat generated within the motor is faster to dissipate than the compressor, allow at least 45 minutes for the overload to reset, then retest.

SERVICING

WARNING

HIGH VOLTAGE!
Disconnect ALL power before servicing or installing this unit. Multiple power sources may be present. Failure to do so may cause property damage, personal injury or death.

1. Remove the motor leads from its respective connection points and capacitor (if applicable).
2. Check the continuity between each of the motor leads.
3. Touch one probe of the ohmmeter to the motor frame (ground) and the other probe in turn to each lead.

If the windings do not test continuous or a reading is obtained from lead to ground, replace the motor.

S-16C CHECKING ECM MOTOR WINDINGS

WARNING

HIGH VOLTAGE!
Disconnect ALL power before servicing or installing this unit. Multiple power sources may be present. Failure to do so may cause property damage, personal injury or death.

1. Disconnect the 5-pin and the 16-pin connectors from the ECM power head.
2. Remove the 2 screws securing the ECM power head and separate it from the motor.
3. Disconnect the 3-pin motor connector from the power head and lay it aside.
4. Using an ohmmeter, check the motor windings for continuity to ground (pins to motor shell). If the ohmmeter indicates continuity to ground, the motor is defective and must be replaced.
5. Using an ohmmeter, check the windings for continuity (pin to pin). If no continuity is indicated, the thermal limit (over load) device may be open. Allow motor to cool and retest.

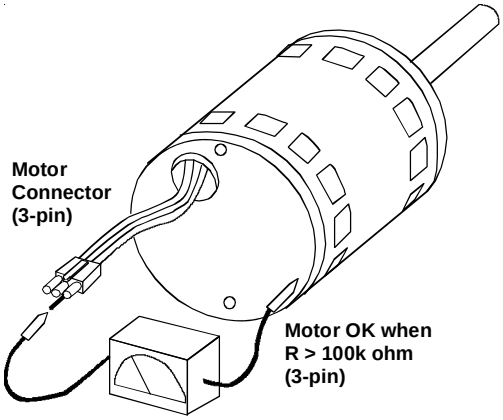

WINDING TEST

S-16D CHECKING EEM MOTORS

*Applies to GPG14*****M**

The EEM motor is a one piece, fully encapsulated, 3 phase brushless DC (single phase AC input) motor with ball bearing construction. The EEM motor features an integral control module.

1. Using a voltmeter, check for 400 volts to the motor connections L and N. If 400 volts is present, proceed to step 2. If 400 volts is not present, check the line voltage circuit to the motor.
2. Using a voltmeter, check for 24 volts from terminal C to either terminal 1, 2, 3, 4, or 5, depending on which tap is being used, at the motor. If voltage present, proceed to step 3. If no voltage, check 24 volt circuit to motor.
3. If voltage was present in steps 1 and 2, the motor has failed and will need to be replaced.

Note: When replacing motor, ensure the belly band is between the vents on the motor and the wiring has the proper drip loop to prevent condensate from entering the motor.

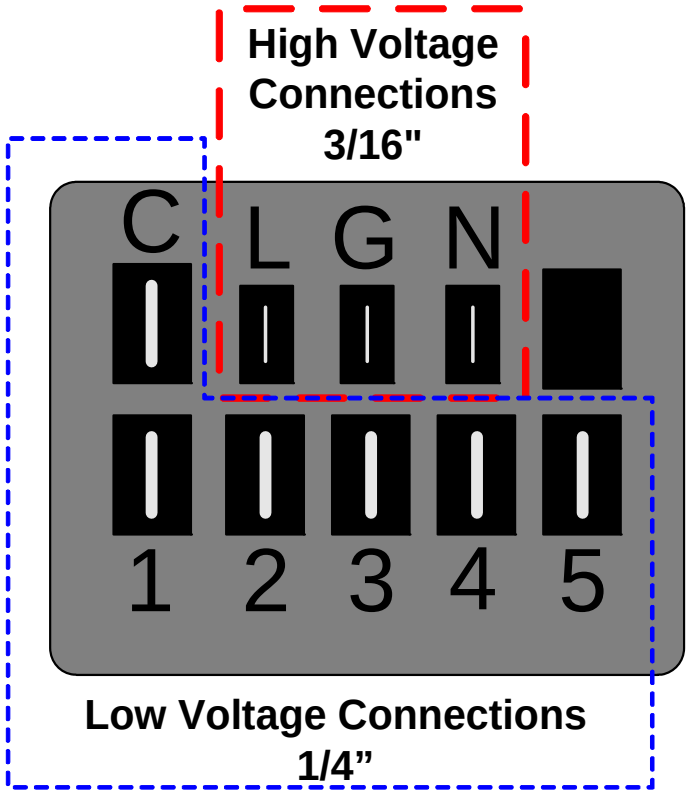

EEM MOTOR CONNECTIONS

S-17 CHECKING COMPRESSOR

WARNING

Hermetic compressor electrical terminal venting can be dangerous. When insulating material which supports a hermetic compressor or electrical terminal suddenly disintegrates due to physical abuse or as a result of an electrical short between the terminal and the compressor housing, the terminal may be expelled, venting the vapor and liquid contents of the compressor housing and system.

If the compressor terminal PROTECTIVE COVER and gasket (if required) are not properly in place and secured, there is a remote possibility if a terminal vents, that the vaporous and liquid discharge can be ignited, spouting flames several feet, causing potentially severe or fatal injury to anyone in its path.

This discharge can be ignited external to the compressor if the terminal cover is not properly in place and if the discharge impinges on a sufficient heat source.

Ignition of the discharge can also occur at the venting terminal or inside the compressor, if there is sufficient contaminant air present in the system and an electrical arc occurs as the terminal vents.

Ignition cannot occur at the venting terminal without the presence of contaminant air, and cannot occur externally from the venting terminal without the presence of an external ignition source.

Therefore, proper evacuation of a hermetic system is essential at the time of manufacture and during servicing.

To reduce the possibility of external ignition, all open flame, electrical power, and other heat sources should be extinguished or turned off prior to servicing a system.

S-17A RESISTANCE TEST

Each compressor is equipped with an internal overload.

The line break internal overload senses both motor amperage and winding temperature. High motor temperature or amperage heats the disc causing it to open, breaking the common circuit within the compressor on single phase units.

Heat generated within the compressor shell, usually due to recycling of the motor, high amperage or insufficient gas to cool the motor, is slow to dissipate. Allow at least three to four hours for it to cool and reset, then retest.

Fuse, circuit breaker, ground fault protective device, etc. has not tripped -

WARNING

HIGH VOLTAGE!
Disconnect ALL power before servicing or installing this unit. Multiple power sources may be present. Failure to do so may cause property damage, personal injury or death.

1. Remove the leads from the compressor terminals.

WARNING

See warnings S-17 before removing compressor terminal cover.

2. Using an ohmmeter, test continuity between terminals S-R, C-R, and C-S, on single phase units or terminals T1, T2 and T3, on 3 phase units.

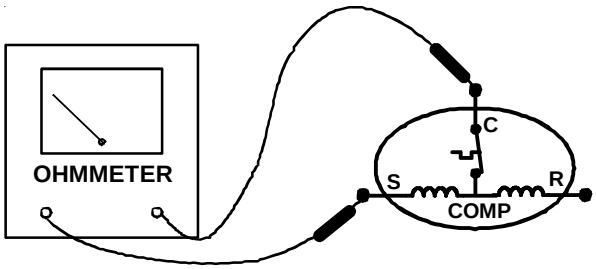

TESTING COMPRESSOR WINDINGS

If either winding does not test continuous, replace the compressor.

NOTE: If an open compressor is indicated, allow ample time for the internal overload to reset before replacing compressor.

SERVICING

S-17B GROUND TEST

If fuse, circuit breaker, ground fault protective device, etc., has tripped, this is a strong indication that an electrical problem exists and must be found and corrected. The circuit protective device rating must be checked, and its maximum rating should coincide with that marked on the equipment nameplate.

With the terminal protective cover in place, it is acceptable to replace the fuse or reset the circuit breaker ONE TIME ONLY to see if it was just a nuisance opening. If it opens again, DO NOT continue to reset.

WARNING

Disconnect ALL power before servicing.

Disconnect all power to unit, making sure that **all** power legs are open.

1. DO NOT remove protective terminal cover. Disconnect the three leads going to the compressor terminals at the nearest point to the compressor.
2. Identify the leads and using a Megger, Hi-Potential Ground Tester, or other suitable instrument which puts out a voltage between 300 and 1500 volts, check for a ground separately between each of the three leads and ground (such as an unpainted tube on the compressor). Do not use a low voltage output instrument such as a volt-ohmmeter.

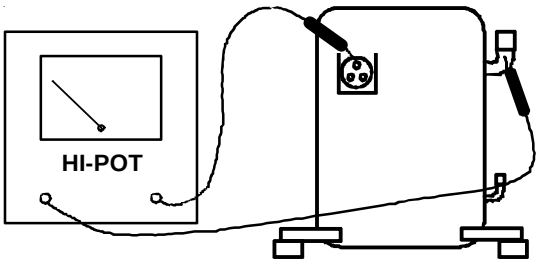

COMPRESSOR GROUND TEST

3. If a ground is indicated, then carefully remove the compressor terminal protective cover and inspect for loose leads or insulation breaks in the lead wires.
4. If no visual problems indicated, carefully remove the leads at the compressor terminals.

WARNING

Damage can occur to the glass embedded terminals if the leads are not properly removed. This can result in terminal and hot oil discharging.

Carefully retest for ground, directly between compressor terminals and ground.

5. If ground is indicated, replace the compressor.

S-17D OPERATION TEST

If the voltage, capacitor, overload and motor winding test fail to show the cause for failure:

WARNING

HIGH VOLTAGE!
Disconnect ALL power before servicing or installing this unit. Multiple power sources may be present. Failure to do so may cause property damage, personal injury or death.

1. Remove unit wiring from disconnect switch and wire a test cord to the disconnect switch.

NOTE: The wire size of the test cord must equal the line wire size and the fuse must be of the proper size and type.

2. With the protective terminal cover in place, use the three leads to the compressor terminals that were disconnected at the nearest point to the compressor and connect the common, start and run clips to the respective leads.
3. Connect good capacitors of the right MFD and voltage rating into the circuit as shown.
4. With power ON, close the switch.

WARNING

Line Voltage now present.

A. If the compressor starts and continues to run, the cause for failure is somewhere else in the system.

B. If the compressor fails to start - replace.

S-18 TESTING CRANKCASE HEATER (OPTIONAL ITEM)

The crankcase heater must be energized a minimum of four (4) hours before the unit is operated.

Crankcase heaters are used to prevent migration or accumulation of refrigerant in the compressor crankcase during the off cycles and prevents liquid slugging or oil pumping on start up.

A crankcase heater will not prevent compressor damage due to a floodback or over charge condition.

WARNING

Disconnect ALL power before servicing.

1. Disconnect the heater lead in wires.
2. Using an ohmmeter, check heater continuity - should test continuous. If not, replace.

SERVICING

S-100 REFRIGERATION REPAIR PRACTICE

DANGER

Always remove the refrigerant charge in a proper manner before applying heat to the system.

When repairing the refrigeration system:

WARNING

Disconnect ALL power before servicing.

1. Never open a system that is under vacuum. Air and moisture will be drawn in.
2. Plug or cap all openings.
3. Remove all burrs and clean the brazing surfaces of the tubing with sand cloth or paper. Brazing materials do not flow well on oxidized or oily surfaces.
4. Clean the inside of all new tubing to remove oils and pipe chips.
5. When brazing, sweep the tubing with dry nitrogen to prevent the formation of oxides on the inside surfaces.
6. Complete any repair by replacing the liquid line drier in the system, evacuate and charge.

BRAZING MATERIALS

Copper to Copper Joints - Sil-Fos used without flux (alloy of 15% silver, 80% copper, and 5% phosphorous). Recommended heat 1400°F.

Copper to Steel Joints - Silver Solder used without a flux (alloy of 30% silver, 38% copper, 32% zinc). Recommended heat - 1200°F.

Aluminum to Aluminum & Copper to Aluminum Joints – ZA-1 Brazing Rods use Flux System Cesium-Based Polymer System (alloy of 78% Zinc and 22% Aluminum). Melting point 826*F Flow point 905*F.

S-101 LEAK TESTING

(NITROGEN OR NITROGEN-TRACED)

WARNING

To avoid the risk of fire or explosion, never use oxygen, high pressure air or flammable gases for leak testing of a refrigeration system.

WARNING

To avoid possible explosion, the line from the nitrogen cylinder must include a pressure regulator and a pressure relief valve. The pressure relief valve must be set to open at no more than 150 psig.

Pressure test the system using dry nitrogen and soapy water to locate leaks. If you wish to use a leak detector, charge the system to 10 psi using the appropriate refrigerant then use nitrogen to finish charging the system to working pressure, then apply the detector to suspect areas. If leaks are found, repair them. After repair, repeat the pressure test. If no leaks exist, proceed to system evacuation.

S-102 EVACUATION

WARNING

REFRIGERANT UNDER PRESSURE!
Failure to follow proper procedures may cause property damage, personal injury or death.

This is the most important part of the entire service procedure. The life and efficiency of the equipment is dependent upon the thoroughness exercised by the serviceman when evacuating air (non-condensables) and moisture from the system.

Air in a system causes high condensing temperature and pressure, resulting in increased power input and reduced performance.

Moisture chemically reacts with the refrigerant oil to form corrosive acids. These acids attack motor windings and parts, causing breakdown.

The equipment required to thoroughly evacuate the system is a high vacuum pump, capable of producing a vacuum equivalent to 25 microns absolute and a thermocouple vacuum gauge to give a true reading of the vacuum in the system.

NOTE: Never use the system compressor as a vacuum pump or run when under a high vacuum. Motor damage could occur.

WARNING

Do not front seat the service valve(s) with the compressor open, with the suction line of the comprssor closed or severely restricted.

1. Connect the vacuum pump, vacuum tight manifold set with high vacuum hoses, thermocouple vacuum gauge and charging cylinder as shown.
2. Start the vacuum pump and open the shut off valve to the high vacuum gauge manifold only. After the compound gauge (low side) has dropped to approximately 29 inches of vacuum, open the valve to the vacuum thermocouple gauge. See that the vacuum pump will blank-off to a maximum of 25 microns. A high vacuum pump can only produce a good vacuum if its oil is non-contaminated.

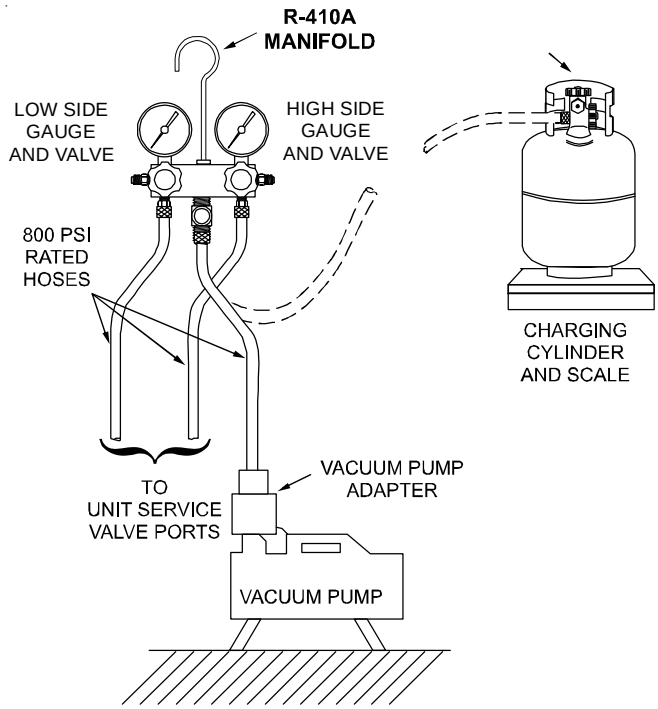

EVACUATION

3. If the vacuum pump is working properly, close the valve to the vacuum thermocouple gauge and open the high and low side valves to the high vacuum manifold set. With the valve on the charging cylinder closed, open the manifold valve to the cylinder.
4. Evacuate the system to at least 29 inches gauge before opening valve to thermocouple vacuum gauge.
5. Continue to evacuate to a maximum of 250 microns. Close valve to vacuum pump and watch rate of rise. If vacuum does not rise above 1500 microns in three to five minutes, system can be considered properly evacuated.
6. If thermocouple vacuum gauge continues to rise and levels off at about 5000 microns, moisture and non-condensables are still present. If gauge continues to rise a leak is present. Repair and re-evacuate.
7. Close valve to thermocouple vacuum gauge and vacuum pump. Shut off pump and prepare to charge.

S-103 CHARGING

WARNING

REFRIGERANT UNDER PRESSURE!
*** Do not overcharge system with refrigerant.**
*** Do not operate unit in a vacuum or at negative pressure.**
Failure to follow proper procedures may cause property damage, personal injury or death.

CAUTION

Only use refrigerant certified to AHRI standards. Used refrigerant may cause compressor damage. The manufacturer is not responsible for damage or the need for repairs resulting from the use of unapproved refrigerant types or used or recycled refrigerant. Most portable machines cannot clean used refrigerant to meet AHRI standards.

CAUTION

Operating the compressor with the suction valve closed will cause serious compressor damage.

Charge the system with the exact amount of refrigerant.

Refer to the specification section or check the unit nameplates for the correct refrigerant charge.

An inaccurately charged system will cause future problems.

1. Using a quality set of charging scales, weigh the proper amount of refrigerant for the system. Allow liquid refrigerant only to enter the high side.
2. After the system will take all it will take, close the valve on the high side of the charging manifold.
3. Start the system and charge the balance of the refrigerant through the low side.

NOTE: R410A should be drawn out of the storage container or drum in liquid form due to its fractionation properties, but should be "Flashed" to its gas state before entering the system. There are commercially available restriction devices that fit into the system charging hose set to accomplish this. **DO NOT** charge liquid R410A into the compressor.

4. With the system still running, close the valve on the charging cylinder. At this time, you may still have some liquid refrigerant in the charging cylinder hose and will definitely have liquid in the liquid hose. Reseat the liquid line core. Slowly open the high side manifold valve and transfer the liquid refrigerant from the liquid line hose and charging cylinder hose into the suction service valve port. **CAREFUL:** Watch so that liquid refrigerant does not enter the compressor.

Due to their design, Scroll compressors are inherently more tolerant of liquid refrigerant.

NOTE*: Even though the compressor section of a Scroll compressor is more tolerant of liquid refrigerant, continued floodback or flooded start conditions may wash oil from the bearing surfaces causing premature bearing failure.*

SERVICING

S-104 CHECKING COMPRESSOR EFFICIENCY

The reason for compressor inefficiency is broken or damaged scroll flanks on Scroll compressors, reducing the ability of the compressor to pump refrigerant vapor.

The condition of the scroll flanks is checked in the following manner:

1. Attach gauges to the high and low side of the system.
2. Start the system and run a "Cooling Performance Test.

If the test shows:

a. Below normal high side pressure.

b. Above normal low side pressure.

c. Low temperature difference across coil.

d. Low amp draw at compressor.

And the charge is correct. The compressor is faulty - replace the compressor.

S-105B THERMOSTATIC EXPANSION VALVE

The expansion valve is designed to control the rate of liquid refrigerant flow into an evaporator coil in exact proportion to the rate of evaporation of the refrigerant in the coil. The amount of refrigerant entering the coil is regulated since the valve responds to temperature of the refrigerant gas leaving the coil (feeler bulb contact) and the pressure of the refrigerant in the coil.

This regulation of the flow prevents the return of liquid refrigerant to the compressor.

The three forces which govern the operation of the valve are: (1) the pressure created in the power assembly by the feeler bulb, (2) evaporator pressure, and (3) the equivalent pressure of the superheat spring in the valve.

0% bleed type expansion valves are used on the indoor coils. The 0% valve will not allow the system pressures (High and Low side) to equalize during the shut down period. The valve will shut off completely at approximately 100 PSIG Pressure.

Good thermal contact between the feeler bulb and the suction line is essential to satisfactory valve control and performance.

The bulb must be securely fastened to a clean straight section of the suction line. Application of the bulb to a horizontal run of line is preferred. If a vertical installation cannot be avoided the bulb should be mounted so that the capillary tubing comes out at the top.

THE VALVES PROVIDED ARE DESIGNED TO MEET THE SPECIFICATION REQUIREMENTS FOR OPTIMUM PRODUCT OPERATION. **DO NOT USE SUBSTITUTES.**

S-106 OVERFEEDING

Overfeeding by the expansion valve results in high suction pressure, cold suction line, and possible liquid slugging of the compressor.

If these symptoms are observed:

1. Check for an overcharged unit by referring to the cooling performance charts in the servicing section.
2. Check the operation of the power element in the valve as explained in S-110 Checking Expansion Valve Operation.
3. Check for restricted or plugged equalizer tube.

S-107 UNDERFEEDING

Underfeeding by the expansion valve results in low system capacity and low suction pressures.

If these symptoms are observed:

1. Check for a restricted liquid line or drier. A restriction will be indicated by a temperature drop across the drier.
2. Check the operation of the power element of the valve as described in S-110 Checking Expansion Valve Operation.

S-108 SUPERHEAT

The expansion valves are factory adjusted to maintain 12 to 15 degrees superheat of the suction gas. Before checking the superheat or replacing the valve, perform all the procedures outlined under Air Flow, Refrigerant Charge, Expansion Valve - Overfeeding, Underfeeding. These are the most common causes for evaporator malfunction.

CHECKING SUPERHEAT

Refrigerant gas is considered superheated when its temperature is higher than the saturation temperature corresponding to its pressure. The degree of superheat equals the degrees of temperature increase above the saturation temperature at existing pressure. See Temperature - Pressure Chart on following page.

CAUTION

To prevent personal injury, carefully connect and disconnect manifold gauge hoses. Escaping liquid refrigerant can cause burns. Do not vent refrigerant to atmosphere. Recover during system repair or final unit disposal.

1. Run system at least 10 minutes to allow pressure to stabilize.
2. Temporarily install thermometer on suction (large) line near compressor with adequate contact and insulate for best possible reading.
3. Refer to the superheat table provided for proper system superheat. Add charge to lower superheat or recover charge to raise superheat.

Superheat Formula = Suct. Line Temp. - Sat. Suct. Temp.

EXAMPLE:

a. Suction Pressure = 143

b. Corresponding Temp. °F. = 50

c. Thermometer on Suction Line = 61°F.

Pressure vs. Temperature Chart																	
R-410A																	
PSIG	°F	PSIG	°F	PSIG	°F	PSIG	°F	PSIG	°F	PSIG	°F
12	-37.7	114.0	37.8	216.0	74.3	318.0	100.2	420.0	120.7	522.0	137.6
14	-34.7	116.0	38.7	218.0	74.9	320.0	100.7	422.0	121.0	524.0	137.9
16	-32.0	118.0	39.5	220.0	75.5	322.0	101.1	424.0	121.4	526.0	138.3
18	-29.4	120.0	40.5	222.0	76.1	324.0	101.6	426.0	121.7	528.0	138.6
20	-36.9	122.0	41.3	224.0	76.7	326.0	102.0	428.0	122.1	530.0	138.9
22	-24.5	124.0	42.2	226.0	77.2	328.0	102.4	430.0	122.5	532.0	139.2
24	-22.2	126.0	43.0	228.0	77.8	330.0	102.9	432.0	122.8	534.0	139.5
26	-20.0	128.0	43.8	230.0	78.4	332.0	103.3	434.0	123.2	536.0	139.8
28	-17.9	130.0	44.7	232.0	78.9	334.0	103.7	436.0	123.5	538.0	140.1
30	-15.8	132.0	45.5	234.0	79.5	336.0	104.2	438.0	123.9	540.0	140.4
32	-13.8	134.0	46.3	236.0	80.0	338.0	104.6	440.0	124.2	544.0	141.0
34	-11.9	136.0	47.1	238.0	80.6	340.0	105.1	442.0	124.6	548.0	141.6
36	-10.1	138.0	47.9	240.0	81.1	342.0	105.4	444.0	124.9	552.0	142.1
38	-8.3	140.0	48.7	242.0	81.6	344.0	105.8	446.0	125.3	556.0	142.7
40	-6.5	142.0	49.5	244.0	82.2	346.0	106.3	448.0	125.6	560.0	143.3
42	-4.5	144.0	50.3	246.0	82.7	348.0	106.6	450.0	126.0	564.0	143.9
44	-3.2	146.0	51.1	248.0	83.3	350.0	107.1	452.0	126.3	568.0	144.5
46	-1.6	148.0	51.8	250.0	83.8	352.0	107.5	454.0	126.6	572.0	145.0
48	0.0	150.0	52.5	252.0	84.3	354.0	107.9	456.0	127.0	576.0	145.6
50	1.5	152.0	53.3	254.0	84.8	356.0	108.3	458.0	127.3	580.0	146.2
52	3.0	154.0	54.0	256.0	85.4	358.0	108.8	460.0	127.7	584.0	146.7
54	4.5	156.0	54.8	258.0	85.9	360.0	109.2	462.0	128.0	588.0	147.3
56	5.9	158.0	55.5	260.0	86.4	362.0	109.6	464.0	128.3	592.0	147.9
58	7.3	160.0	56.2	262.0	86.9	364.0	110.0	466.0	128.7	596.0	148.4
60	8.6	162.0	57.0	264.0	87.4	366.0	110.4	468.0	129.0	600.0	149.0
62	10.0	164.0	57.7	266.0	87.9	368.0	110.8	470.0	129.3	604.0	149.5
64	11.3	166.0	58.4	268.0	88.4	370.0	111.2	472.0	129.7	608.0	150.1
66	12.6	168.0	59.0	270.0	88.9	372.0	111.6	474.0	130.0	612.0	150.6
68	13.8	170.0	59.8	272.0	89.4	374.0	112.0	476.0	130.3	616.0	151.2
70	15.1	172.0	60.5	274.0	89.9	376.0	112.4	478.0	130.7	620.0	151.7
72	16.3	174.0	61.1	276.0	90.4	378.0	112.6	480.0	131.0	624.0	152.3
74	17.5	176.0	61.8	278.0	90.9	380.0	113.1	482.0	131.3	628.0	152.8
76	18.7	178.0	62.5	280.0	91.4	382.0	113.5	484.0	131.6	632.0	153.4
78	19.8	180.0	63.1	282.0	91.9	384.0	113.9	486.0	132.0	636.0	153.9
80	21.0	182.0	63.8	284.0	92.4	386.0	114.3	488.0	132.3	640.0	154.5
82	22.1	184.0	64.5	286.0	92.8	388.0	114.7	490.0	132.6	644.0	155.0
84	23.2	186.0	65.1	288.0	93.3	390.0	115.0	492.0	132.9	648.0	155.5
86	24.3	188.0	65.8	290.0	93.8	392.0	115.5	494.0	133.3	652.0	156.1
88	25.4	190.0	66.4	292.0	94.3	394.0	115.8	496.0	133.6	656.0	156.6
90	26.4	192.0	67.0	294.0	94.8	396.0	116.2	498.0	133.9	660.0	157.1
92	27.4	194.0	67.7	296.0	95.2	398.0	116.6	500.0	134.0	664.0	157.7
94	28.5	196.0	68.3	298.0	95.7	400.0	117.0	502.0	134.5	668.0	158.2
96	29.5	198.0	68.9	300.0	96.2	402.0	117.3	504.0	134.8	672.0	158.7
98	30.5	200.0	69.5	302.0	96.6	404.0	117.7	506.0	135.2	676.0	159.2
100	31.2	202.0	70.1	304.0	97.1	406.0	118.1	508.0	135.5	680.0	159.8
102	32.2	204.0	70.7	306.0	97.5	408.0	118.5	510.0	135.8	684.0	160.3
104	33.2	206.0	71.4	308.0	98.0	410.0	118.8	512.0	136.1	688.0	160.8
106	34.1	208.0	72.0	310.0	98.4	412.0	119.2	514.0	136.4	692.0	161.3
108	35.1	210.0	72.6	312.0	98.9	414.0	119.6	516.0	136.7	696.0	161.8
110	35.5	212.0	73.2	314.0	99.3	416.0	119.9	518.0	137.0		
112	36.9	214.0	73.8	316.0	99.7	418.0	120.3	520.0	137.3		

*Based on ALLIED SIGNAL Data

To obtain the degrees temperature of superheat, subtract 50.0 from 61.0°F.

The difference is 11° Superheat. The 11° Superheat would fall in the ± range of allowable superheat.

SUPERHEAT AND SUBCOOLING ADJUSTMENT ON TXV APPLICATIONS

1. Run system at least 10 minutes to allow pressure to stabilize.
2. Temporarily install thermometer on liquid (small) line near pressure switches with adequate contact and insulate for best possible reading.
3. Check subcooling and superheat. Systems with TXV application should have a subcooling and superheat of 12 - 15 ºF.
   a. If subcooling and superheat are low, **adjust** TXV to 9 ± 3ºF then check subcooling.
   b. If subcooling is low and superheat is high, **add** charge to raise subcooling to 10ºF then check superheat.
   c. If subcooling and superheat are high, **adjust** TXV valve to 12 - 15 ºF then check subcooling.
   d. If subcooling is high and superheat is low, **adjust** TXV valve to 12 - 15 ºF superheat and **remove** charge to lower the subcooling to 2 - 15 ºF.

   The TXV should **NOT** be adjusted at light load conditions 55º to 60ºF, under such conditions only the subcooling can be evaluated. This is because suction pressure is dependent on the indoor coil match, indoor airflow, and wet bulb temperature. **NOTE:** Do **NOT** adjust charge based on suction pressure unless there is a gross undercharge.
4. Disconnect manifold set. Installation is complete.

S-109 CHECKING SUBCOOLING

Refrigerant liquid is considered subcooled when its temperature is lower than the saturation temperature corresponding to its pressure. The degree of subcooling equals the degrees of temperature decrease below the saturation temperature at the existing pressure.

1. Attach an accurate thermometer or preferably a thermocouple type temperature tester to the liquid line close to the pressure switch.
2. Install a high side pressure gauge on the high side (liquid) service valve at the front of the unit.
3. Record the gauge pressure and the temperature of the line.
4. Compare the hi-pressure reading to the "Required Liquid Line Temperature" chart on the previous page. Find the hi-pressure value on the left column. Follow that line right to the column under the design subcooling value. Where the two intersect is the required liquid line temperature.

   Alternately you can convert the liquid line pressure gauge reading to temperature by finding the gauge reading in Temperature - Pressure Chart and reading to the left, find the temperature in the °F Column.
5. The difference between the thermometer reading and pressure to temperature conversion is the amount of subcooling.

Add charge to raise subcooling. Recover charge to lower subcooling.

Subcooling Formula = Sat. Liquid Temp. - Liquid Line Temp.

EXAMPLE:

a. Liquid Line Pressure = 417
b. Corresponding Temp. °F = 120°
c. Thermometer on Liquid line = 109°F

To obtain the amount of subcooling subtract 109°F from 120°F.

The difference is 11° subcooling. See the specification sheet or technical information manual for the design subcooling range for your unit.

S-110 CHECKING EXPANSION VALVE OPERATION

1. Remove the remote bulb of the expansion valve from the suction line.
2. Start the system and cool the bulb in a container of ice water, closing the valve. As you cool the bulb, the suction pressure should fall and the suction temperature will rise.
3. Next warm the bulb in your hand. As you warm the bulb, the suction pressure should rise and the suction temperature will fall.
4. If a temperature or pressure change is noticed, the expansion valve is operating. If no change is noticed, the valve is restricted, the power element is faulty, or the equalizer tube is plugged.
5. Capture the charge, replace the valve and drier and evacuate.

S-111 FIXED ORIFICE RESTRICTOR DEVICES

The fixed orifice restrictor device (flowrator) used in conjunction with the indoor coil is a predetermined bore (I.D.).

It is designed to control the rate of liquid refrigerant flow into an evaporator coil.

The amount of refrigerant that flows through the fixed orifice restrictor device is regulated by the pressure difference between the high and low sides of the system.

In the cooling cycle when the outdoor air temperature rises, the high side condensing pressure rises. At the same time, the cooling load on the indoor coil increases, causing the low side pressure to rise, but at a slower rate.

Since the high side pressure rises faster when the temperature increases, more refrigerant flows to the evaporator, increasing the cooling capacity of the system.

REQUIRED LIQUID LINE TEMPERATURE						
LIQUID PRESSURE AT SERVICE VALVE (PSIG)	REQUIRED SUBCOOLING TEMPERATURE (°F)					
	8	10	12	14	16	18
189	58	56	54	52	50	48
195	60	58	56	54	52	50
202	62	60	58	56	54	52
208	64	62	60	58	56	54
215	66	64	62	60	58	56
222	68	66	64	62	60	58
229	70	68	66	64	62	60
236	72	70	68	66	64	62
243	74	72	70	68	66	64
251	76	74	72	70	68	66
259	78	76	74	72	70	68
266	80	78	76	74	72	70
274	82	80	78	76	74	72
283	84	82	80	78	76	74
291	86	84	82	80	78	76
299	88	86	84	82	80	78
308	90	88	86	84	82	80
317	92	90	88	86	84	82
326	94	92	90	88	86	84
335	96	94	92	90	88	86
345	98	96	94	92	90	88
354	100	98	96	94	92	90
364	102	100	98	96	94	92
374	104	102	100	98	96	94
384	106	104	102	100	98	96
395	108	106	104	102	100	98
406	110	108	106	104	102	100
416	112	110	108	106	104	102
427	114	112	110	108	106	104
439	116	114	112	110	108	106
450	118	116	114	112	110	108
462	120	118	116	114	112	110
474	122	120	118	116	114	112
486	124	122	120	118	116	114
499	126	124	122	120	118	116
511	128	126	124	122	120	118

SERVICING

When the outdoor temperature falls, the reverse takes place. The condensing pressure falls, and the cooling loads on the indoor coil decreases, causing less refrigerant flow.

A strainer is placed on the entering side of the tube to prevent any foreign material from becoming lodged inside the fixed orifice restriction device.

If a restriction should become evident, proceed as follows:

1. Recover refrigerant charge.
2. Remove the orifice or tube strainer assembly and replace.
3. Replace liquid line drier, evacuate and recharge.

CHECKING EQUALIZATION TIME

During the "OFF" cycle, the high side pressure bleeds to the low side through the fixed orifice restriction device. Check equalization time as follows:

1. Attach a gauge manifold to the suction and liquid line dill valves.
2. Start the system and allow the pressures to stabilize.
3. Stop the system and check the time it takes for the high and low pressure gauge readings to equalize.

If it takes more than seven (7) minutes to equalize, the restrictor device is inoperative. Replace, install a liquid line drier, evacuate and recharge.

S-112 CHECKING RESTRICTED LIQUID LINE

When the system is operating, the liquid line is warm to the touch. If the liquid line is restricted, a definite temperature drop will be noticed at the point of restriction. In severe cases, frost will form at the restriction and extend down the line in the direction of the flow.

Discharge and suction pressures will be low, giving the appearance of an undercharged unit. However, the unit will have normal to high subcooling.

Locate the restriction, replace the restricted part, replace drier, evacuate and recharge.

S-113 OVERCHARGE OF REFRIGERANT

An overcharge of refrigerant is normally indicated by an excessively high head pressure.

An evaporator coil, using an expansion valve metering device, will basically modulate and control a flooded evaporator and prevent liquid refrigerant return to the compressor.

An evaporator coil, using a fixed orifice restrictor device (flowrator) metering device, could allow liquid refrigerant to return to the compressor under extreme overcharge conditions.

Also with a fixed orifice restrictor device (flowrator) metering device, extreme cases of insufficient indoor air can cause icing of the indoor coil and liquid refrigerant return to the compressor, but the head pressure would be lower.

There are other causes for high head pressure which may be found in the "Service Problem Analysis Guide."

If other causes check out normal, an overcharge or a system containing non-condensables would be indicated.

If this system is observed:

1. Start the system.
2. Remove and capture small quantities of refrigerant as from the suction line access fitting until the head pressure is reduced to normal.
3. Observe the system while running a cooling performance test. If a shortage of refrigerant is indicated, then the system contains non-condensables.

S-114 NON-CONDENSABLES

If non-condensables are suspected, shut down the system and allow the pressures to equalize. Wait at least 15 minutes. Compare the pressure to the temperature of the coldest coil since this is where most of the refrigerant will be. If the pressure indicates a higher temperature than that of the coil temperature, non-condensables are present.

Non-condensables are removed from the system by first removing the refrigerant charge, replacing and/or installing liquid line drier, evacuating and recharging.

S-115 COMPRESSOR BURNOUT

When a compressor burns out, high temperature develops causing the refrigerant, oil and motor insulation to decompose forming acids and sludge.

If a compressor is suspected of being burned-out, attach a refrigerant hose to the liquid line dill valve and properly remove and dispose of the refrigerant.

Now determine if a burn out has actually occurred. Confirm by analyzing an oil sample using a Sporlan Acid Test Kit, AK-3 or its equivalent.

Remove the compressor and obtain an oil sample from the suction stub. If the oil is not acidic, either a burnout has not occurred or the burnout is so mild that a complete clean-up is not necessary.

If acid level is unacceptable, the system must be cleaned by using the clean-up drier method.

CAUTION

Do not allow the sludge or oil to contact the skin. Severe burns may result.

NOTE: The Flushing Method using R-11 refrigerant is no longer approved.

SERVICING

Suction Line Drier Clean-Up Method

The POE oils used with R410A refrigerant is an excellent solvent. In the case of a burnout, the POE oils will remove any burnout residue left in the system. If not captured by the refrigerant filter, they will collect in the compressor or other system components, causing a failure of the replacement compressor and/or spread contaminants throughout the system, damaging additional components.

The suction line filter drier should be installed as close to the compressor suction fitting as possible. The filter must be accessible and be rechecked for a pressure drop after the system has operated for a time. It may be necessary to use new tubing and form as required.

NOTE: At least twelve (12) inches of the suction line immediately out of the compressor stub must be discarded due to burned residue and contaminates.

1. Remove compressor discharge line strainer.
2. Remove the liquid line drier and expansion valve.
3 Purge all remaining components with dry nitrogen or carbon dioxide until clean.
4. Install new components **including** liquid line drier.
5. Braze all joints, leak test, evacuate, and recharge system.
6. Start up the unit and record the pressure drop across the drier.
7. Continue to run the system for a minimum of twelve (12) hours and recheck the pressure drop across the drier. Pressure drop should not exceed 6 PSIG.
8. Continue to run the system for several days, repeatedly checking pressure drop across the suction line drier. If the pressure drop never exceeds the 6 PSIG, the drier has trapped the contaminants. Remove the suction line drier from the system.
9. If the pressure drop becomes greater, then it must be replaced and steps 5 through 9 repeated until it does not exceed 6 PSIG.

NOTE: Regardless, the cause for burnout must be determined and corrected before the new compressor is started.

S-200 CHECKING EXTERNAL STATIC PRESSURE

The minimum and maximum allowable duct static pressure is found in the Technical Information Manual.

Too great of an external static pressure will result in insufficient air that can cause icing of the coil, whereas too much air can cause poor humidity control, and condensate to be pulled off the evaporator coil causing condensate leakage. Too much air can cause motor overloading and in many cases this constitutes a poorly designed system. To determine proper air movement, proceed as follows:

1. Using a draft gauge (inclined manometer) measure the static pressure of the return duct at the inlet of the unit, (Negative Pressure).

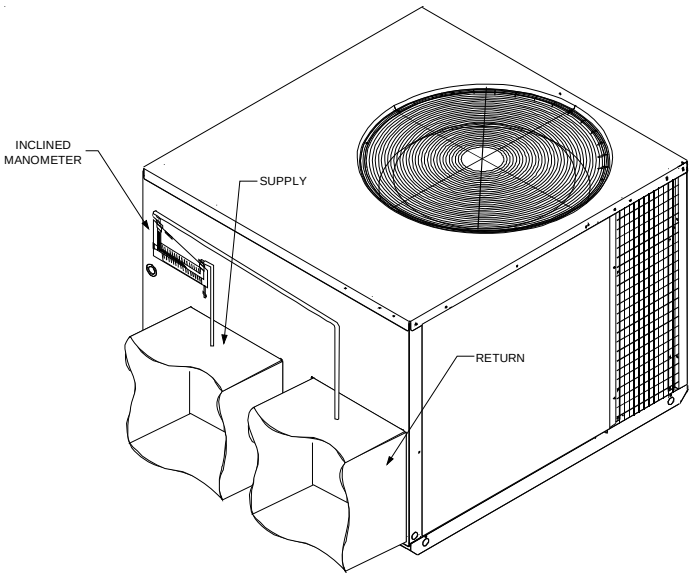

Total External Static

2. Measure the static pressure of the supply duct, (Positive Pressure).
3. Add the two readings together.

NOTE: Both readings may be taken simultaneously and read directly on the manometer if so desired.

4. Consult proper table for quantity of air.

If the external static pressure exceeds the minimum or maximum allowable statics, check for closed dampers, dirty filters, undersized or poorly laid out ductwork.

S-201 CHECKING TEMPERATURE RISE

Temperature rise is related to the BTUH output of the unit and the amount of air (CFM) circulated over the heat exchanger.

All units are designed for a given range of temperature increase. This is the temperature of the air leaving the unit minus the temperature of the air entering the unit.

The more air (CFM) being delivered through a given unit the less the rise will be; so the less air (CFM) being delivered, the greater the rise. The temperature rise should be adjusted in accordance to a given unit specifications and its external static pressure.

1. Check BTUH input to unit do not exceed input rating stamped on rating plate.
2. Take entering and leaving air temperatures.
3. Select the proper speed tap or dip switch setting for direct drive units.
4. Take motor amperage draw to determine that the motor is not overloaded during adjustments.

SERVICING

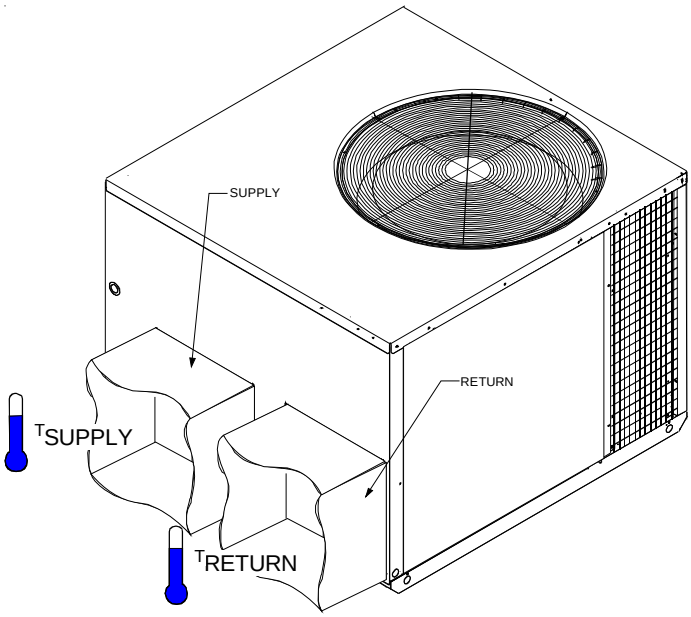

RISE = TSUPPLY -TRETURN

Checking Temperature Rise

S-300 TESTING PRIMARY LIMIT CONTROL

GPGM units use a snap-disk type primary limit device. Sometimes referred to as "stat on a stick". The limit setting is fixed and must not be readjusted in the field.

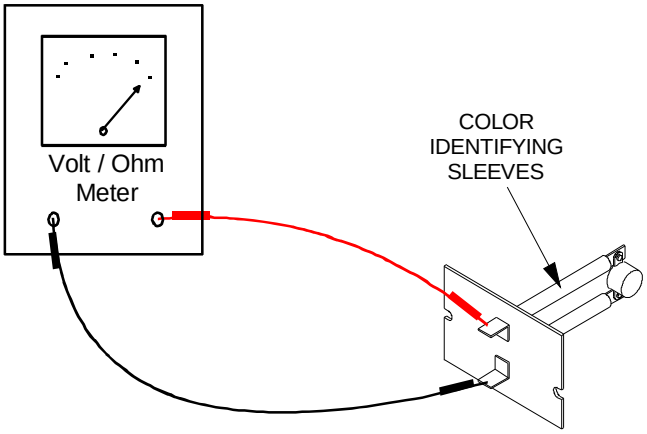

TESTING PRIMARY LIMIT CONTROL

Refer to the specification section to determine the proper limit cutout temperature for the model being serviced.

In all instances the limit control is wired in series with the ignition control.

If the temperature within the furnace should exceed this setting, the control will open, de-energizing the ignition control which in turn will open the electrical circuit to the gas valve.

The control will automatically reset when the temperature within the combustion chamber is sufficiently lowered.

WARNING

HIGH VOLTAGE!
Disconnect ALL power before servicing or installing this unit. Multiple power sources may be present. Failure to do so may cause property damage, personal injury or death.

1. Remove electrical power to unit. Some units may have more than one source of power.
2. Remove the wires from the limit control terminals.
3. Using an ohmmeter, test for continuity across the two terminals.
4. If limit test open allow unit to cool and retest.
5. If still open, replace the control.

S-301 TESTING AUXILIARY LIMIT

The auxiliary limit control is a preset nonadjustable control mounted in the blower compartment area.

It is connected in series with the rollout switch wiring to the gas valve. If its temperature should be exceeded, it will open, interrupting the voltage to the gas valve causing it to open.

An additional limit (primary limit) control is required for safety control of high temperature within the furnace or ductwork.

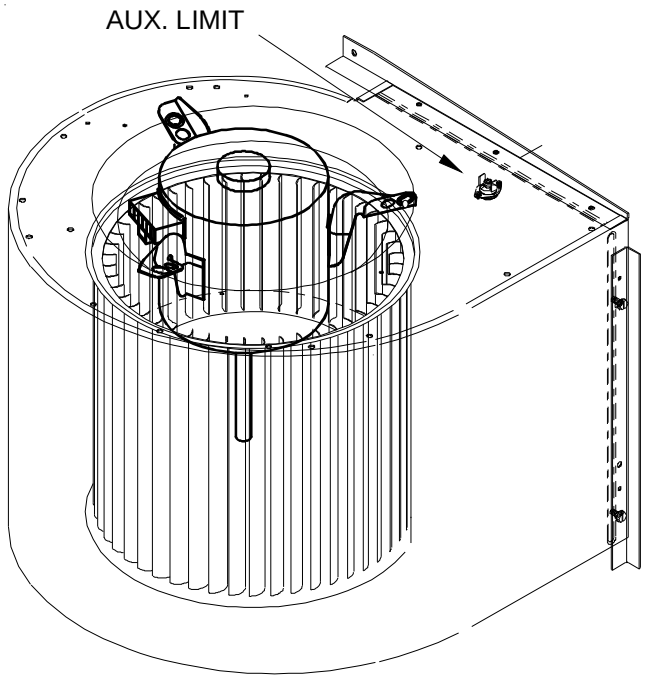

SERVICING

WARNING

HIGH VOLTAGE!
Disconnect ALL power before servicing or installing this unit. Multiple power sources may be present. Failure to do so may cause property damage, personal injury or death.

1. Remove the wires from the auxiliary limit control terminals.
2. Using an ohmmeter, test for continuity across the two terminals. No reading indicates the control is open. Allow unit to cool and retest. If still open, replace the control.

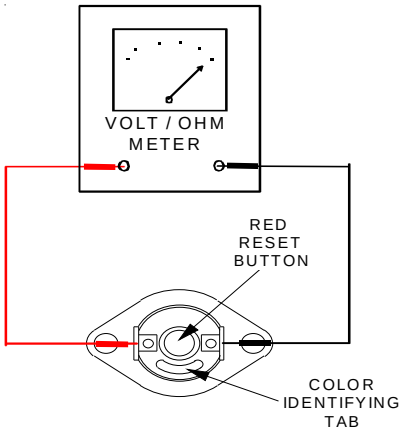

TESTING AUXILIARY LIMIT CONTROL

S-302 CHECKING FLAME ROLLOUT SWITCH

GPG***M units are equipped with a temperature-activated manual reset control. This control is mounted to the manifold assembly and is wired in series with the auxiliary limit and gas valve. The control is designed to open should a flame roll out occur. An over firing condition or flame impingement on the heat shield can also cause the control to open.

If the rollout control has opened, the circuit between the ignition control and gas valve will be interrupted and the ignition control module will go into lockout. The servicer should reset the ignition control by opening and closing the thermostat circuit. The servicer should look for the ignitor sparking which indicates there is power to the ignition control. The servicer should measure the voltage between each side of the rollout control and ground while the ignition control is try to power the gas valve.

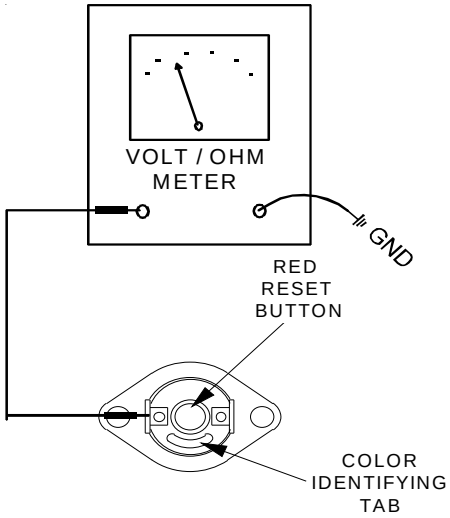

CHECKING FLAME ROLLOUT SWITCH

Limit Switch Operation (Applies to Primary, Auxiliary, and Roll Out Limits) DSI systems.

If a limit switch opens, the indoor blower is energized on heat speed and the induced draft blower is energized. The LED on the control flashes "4" to indicate an open limit switch. The blower and inducer remain on while the limit switch is open. The gas valve is de-energized. Power to the thermostat "R" is removed while the limit switch is open.

When the limit switch re-closes, the induced draft motor runs through its post purge and the indoor blower goes through the heat off delay.

If a call for heat exists when the limit switch re-closes, the control goes through a pre-purge period and then makes an ignition attempt. The indoor blower remains on (for the delay off time) during the re-ignition attempt.

1. If no voltage is measured on either side of control it indicates ignition control or wiring to control problem.
2. If voltage is measured on one side of the control and not the other, it indicates the control is open.
3. If voltage is measured on both sides of the control the wiring to gas valve or valve is at fault.

Servicing procedure with furnace not firing.

1. Confirm that the outer door was in place and all screws tightened. (No leaks under the door.)
2. Check to see if any damage was done to the furnace especially the wiring.
3. Confirm that heat exchanger is not obstructed by feeling for discharge air from the flue hood when the combustion blower is running but the unit is not firing.

If the above steps do not suggest the reason the control has tripped the furnace should be fired.

1. Remove the heating compartment door.
2. Turn of the power or open the thermostat circuit.

3. Reset the rollout control.
4. Turn power on and put the unit into a call for heating.

CAUTION

Flame rollout could occur. Keep face and hands a safe distance from burner area.

5. Look under the heat shield as the unit is running. Flames should be drawn into firing tubes.
   a. If only one burners flame is not drawn into the tube, that tube is restricted.
   b. If, without the air circulation blower running, all flames are not drawn into the tubes either the collector box, combustion blower, or flue outlet is obstructed. If the combustion blower or flue outlet is obstructed, the pressure switch should have opened preventing the unit from firing, also inspect the unit pressure switch and wiring.
   c. If the burner flame is not drawn into the tube only when the air circulation blower is running, then a cracked heat exchanger tube is present.

S-303 TESTING INDUCER MOTOR

WARNING

HIGH VOLTAGE!
Disconnect ALL power before servicing or installing this unit. Multiple power sources may be present. Failure to do so may cause property damage, personal injury or death.

1. Disconnect the motor wire leads from its connection point at integrated ignition control module.
2. Using and ohmmeter, test for continuity between each of the motor leads.
3. Touch one probe of the ohmmeter to the motor frame (ground) and the other probe in turn to each lead.

If the windings do not test continuous or a reading is obtained to ground, replace the motor.

4. After completing check and/or replacement of induced draft blower motor.
5. Turn on electrical power and verify proper unit operation.

S-304 TESTING GAS VALVE

Direct Spark Ignition (DSI) Systems

A two-stage combination redundant operator type gas valve which provides all manual and automatic control functions required for gas fired heating equipment is used on this model.

The valve provides control of main burner gas flow, pressure regulation, and 100 percent safety shut-off.

WARNING

HIGH VOLTAGE!
Disconnect ALL power before servicing or installing this unit. Multiple power sources may be present. Failure to do so may cause property damage, personal injury or death.

1. Ensure gas valve and main gas supply are on.
2. Using a voltmeter, check for 24 volts as noted below for 2-stage gas valves.
   a. For 2-stage gas valves, check from C and M terminals on the valve.
3. If 24 volts are present and no gas flows through the valve, replace valve.

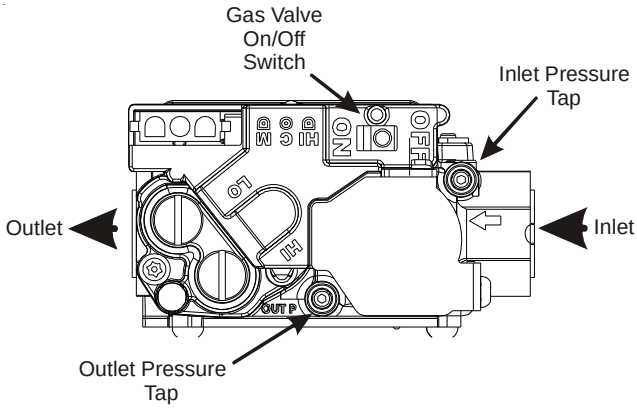

W/R 36G54-238
WHITE RODGERS MODEL 36G 2-STAGE GAS VALVE

SERVICING

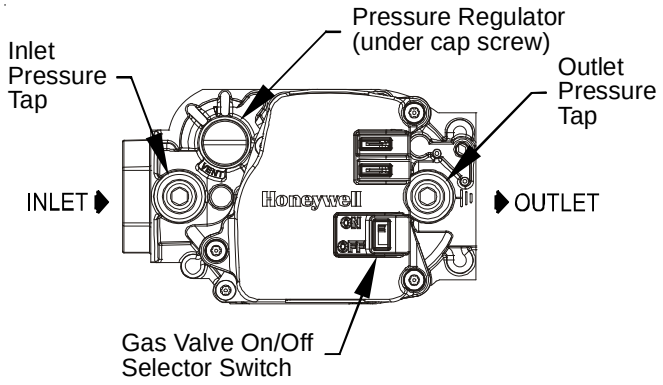

HONEYWELL MODEL VR8215 1-STAGE GAS VALVE

S-305 CHECKING MAIN BURNERS

The main burners are used to provide complete combustion of various fuels in a limited space, and transfer this heat of the burning process to the heat exchanger.

Proper ignition, combustion, and extinction are primarily due to burner design, orifice sizing, gas pressure, primary and secondary air, vent and proper seating of burners.

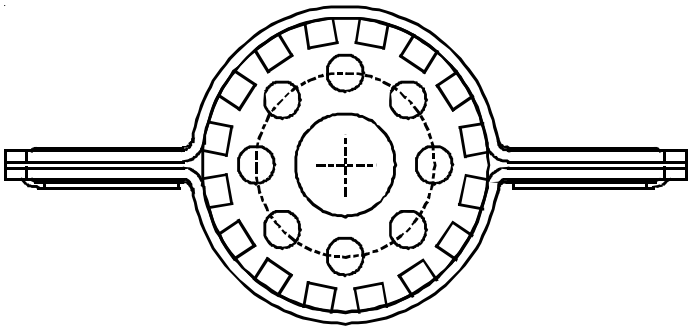

BECKETT BURNER

WARNING

Disconnect gas and electrical power supply.

In checking main burners, look for signs of rust, oversized and undersized carry-over ports restricted with foreign material, etc.

S-306 CHECKING ORIFICES

A predetermined fixed gas orifice is used in all of these furnaces. That is an orifice which has a fixed bore and position.

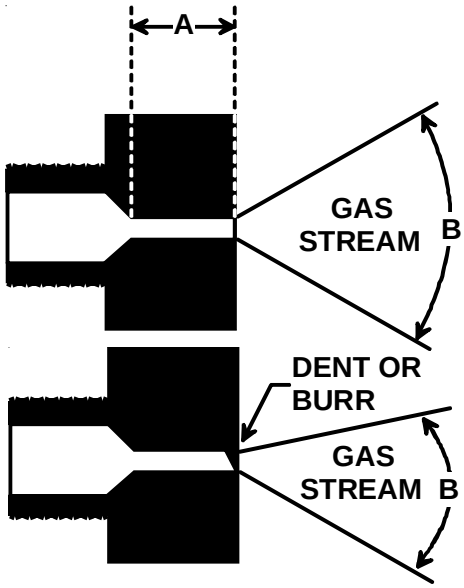

The length of Dimension "A" determines the angle of Gas Stream Defraction, "B".

A dent or burr will cause severe deflection of gas stream.

No resizing should be attempted until all factors are taken into consideration such as inlet manifold gas pressure, alignment, and positioning, specific gravity and BTU content of the gas being consumed.

The only time resizing is required is when a reduction in firing rate is required for an increase in altitude.

Orifices should be treated with care in order to prevent damage. They should be removed and installed with a box-end wrench in order to prevent distortion. In no instance should an orifice be peened over and redrilled. This will change the angle or deflection of the vacuum effect or entraining of primary air, which will make it difficult to adjust the flame properly. This same problem can occur if an orifice spud of a different length is substituted.

WARNING

Disconnect gas and electrical power supply.

1. Check orifice visually for distortion and/or burrs.
2. Check orifice size with orifice sizing drills.
3. If resizing is required, a new orifice of the same physical size and angle with proper drill size opening should be installed.

SERVICING

S-307 CHECKING GAS PRESSURE

Gas inlet and manifold pressures should be checked and adjusted in accordance to the type of fuel being consumed.

WARNING

Disconnect gas and electrical power supply.

1. Connect a water manometer or adequate gauge to the inlet pressure fitting of the gas valve.
2. Remove the pressure tap fitting at the manifold if provided or check at the gas valve outlet fitting and connect another manometer or gauge.

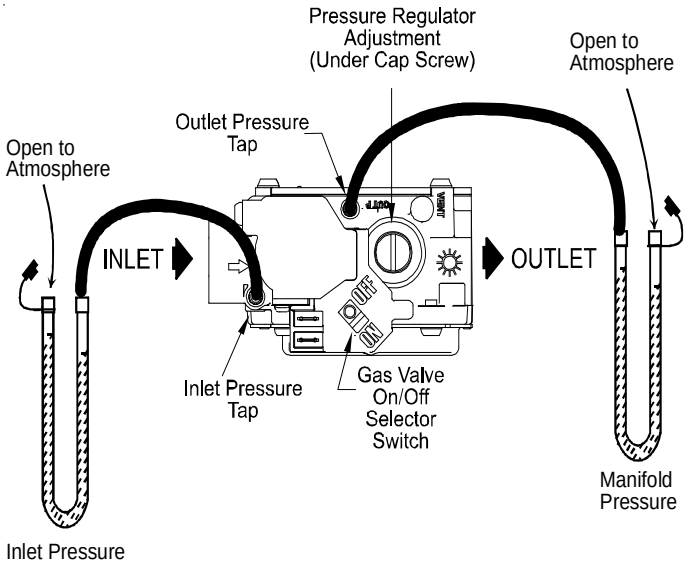

WHITE ROGERS MODEL 36G 1-STAGE GAS VALVE

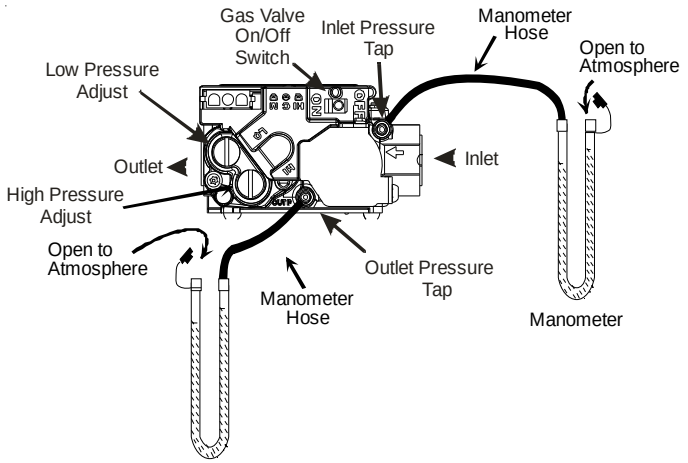

WHITE ROGERS MODEL 36G 2-STAGE GAS VALVE

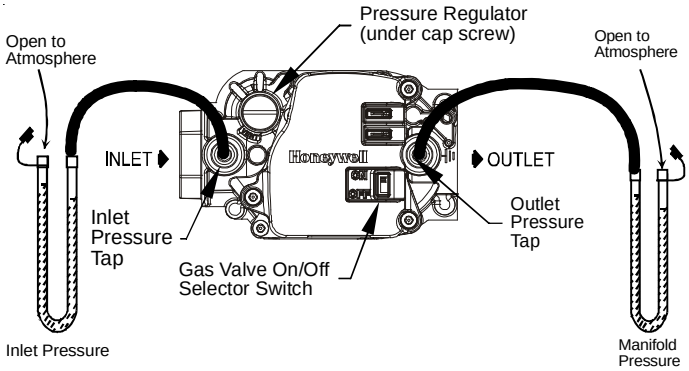

HONEYWELL MODEL VR8215 1-STAGE GAS VALVE

MEASURING INLET AND MANIFOLD GAS PRESSURE

With Power ON:

WARNING

Line Voltage now present.

3. Put furnace into heating cycle and turn on all other gas consuming appliances.

For **NATURAL GAS:**

a. Inlet pressure should be a nominal 7" w.c.

b. (2 stage heat models only) Manifold pressure on low stage should be 2.0” w.c. ± .3"w.c.

c. Manifold pressure for 1 stage heat models and high stage for 2 stage heat models should be 3.5” ± .3"w.c.

For **PROPANE GAS:**

a. Inlet pressure should be a nominal 11" w.c.

b. (2 stage heat models only) Manifold pressure on low stage should be 6" w.c.

c. Manifold pressure for 1 stage heat models and high stage for 2 stage heat models should be 10” w.c.

Manifold Gas Pressure	
Natural Gas	3.5" w.c.
Propane Gas	10.0" w.c.

Single Stage

Manifold Gas Pressure			
Gas		**Range**	**Nominal**
Natural	Low Stage	1.6 - 2.2" w.c.	2.0" w.c.
	High Stage	3.2 - 3.8" w.c.	3.5" w.c.
Propane	Low Stage	5.7 - 6.3" w.c.	6.0" w.c.
	High Stage	9.7 - 10.3" w.c.	10.0" w.c.

Two Stage

If operating pressures differ from above, make necessary pressure regulator adjustments, check piping size, etc., and/or consult with local utility.

SERVICING

S-308 CHECKING FOR DELAYED IGNITION

Delayed ignition is a delay in lighting a combustible mixture of gas and air which has accumulated in the combustion chamber.

When the mixture does ignite, it may explode and/or rollout causing burning in the burner venturi.

If delayed ignition should occur, the following should be checked:

1. Improper gas pressure - adjust to proper pressure. (See S-307)
2. Improper burner positioning - burners should be in locating slots, level front to rear and left to right.
3. Carry over (lighter tube or cross lighter) obstructed - clean.
4. Main burner orifice(s) deformed, or out of alignment to burner - replace.

S-309 CHECKING FOR FLASHBACK

Flashback will also cause burning in the burner venturi, but is caused by the burning speed being greater than the gas-air flow velocity coming from a burner port.

Flashback may occur at the moment of ignition, after a burner heats up or when the burner turns off. The latter is known as extinction pop.

Since the end results of flashback and delayed ignition can be the same (burning in the burner venturi) a definite attempt should be made to determine which has occurred.

If flashback should occur, check for the following:

1. Improper gas pressure - adjust to proper pressure. See **S-307**.
2. Check burner for proper alignment and/or replace burner.
3. Improper orifice size - check orifice for obstruction.

S-310 CHECKING PRESSURE CONTROL

A pressure control device is used to measure negative pressure at the induced draft blower motor inlet to detect a partial or blocked flue.

Pressure Switch Operation (DSI Direct Spark System)

The pressure switch is ignored unless there is a call for heat. When the control receives a call for heat, the control checks to see that the pressure switch is open. If the control sees that the pressure switch is closed before the induced draft blower is energized, the LED will flash a code of "2" (to indicate the pressure switch is stuck closed) and the inducer will remain off until the pressure switch opens.

If the pressure switch opens before the ignition period, the induced draft blower will remain on and the control will stay in pre-purge until the pressure switch is closed for an entire 15 second pre-purge period. The LED will flash a code of "3" to indicate open pressure switch.

If the pressure switch opens after the gas valve has been energized, the control will de-energize the gas valve and run the indoor blower through the heat off delay. The inducer stays on until the pressure switch re-closes. Then the control makes another ignition attempt.

WARNING

HIGH VOLTAGE!
Disconnect ALL power before servicing or installing this unit. Multiple power sources may be present. Failure to do so may cause property damage, personal injury or death.

1. Remove wires from the electrical terminals.
2. Using a VOM check from Common to NO (Normally Open) - should read open.

   If switch reads as noted proceed to Step 3, otherwise replace control.
3. Remove the pressure control hose from the control and interconnect with an inclined manometer as shown:

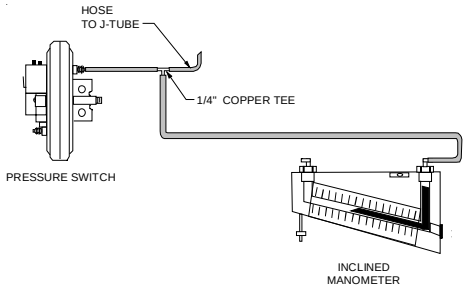

Reconnect wires to the Common and NO terminals.

With Power ON:

WARNING

Line Voltage now present.

4. Energize furnace for heating cycle. The induced draft blower motor will begin to run. The inclined manometer should read approximately -1.2" ± 0.3" W.C with no combustion.
5. Remove and check the two electrical wires and using the VOM check from Common to NO (Normally Open), it should read closed (with I.D. motor running). If not as above, replace pressure control.
6. Reconnect all wires to the control and place in heating cycle.
7. As the unit fires on high stage, the inclined manometer negative pressure will drop to -1.0" ± 0.3" W.C.
8. If not as listed, replace control.

Note: the pressure switch **must** be mounted with the diaphragm in a vertical position.

SERVICING

S-311 HIGH ALTITUDE APPLICATION

High Altitude Derate - U.S. Installations Only

IMPORTANT NOTE: The gas/electric units naturally derate with altitude. Do not attempt to increase the firing rate by changing orifices or increasing the manifold pressure. This can cause poor combustion and equipment failure. At all altitudes, the manifold pressure must be within 0.3 inches W.C. of that listed on the nameplate for the fuel used. At all altitudes and with either fuel, the air temperature rise must be within the range listed on the unit nameplate. Refer to the Installation Manual provided with the LP kit for conversion from natural gas to propane gas and for altitude adjustments.

When this package unit is installed at high altitude, the appropriate High Altitude orifice kit must be installed. As altitude increases, there is a natural reduction in the density of both the gas fuel and combustion air. This kit will provide the proper design certified input rate within the specified altitude range. High altitude kits are not approved for use in Canada. For installations above 2,000 feet, use kit HA-03. The HA-03 kit is used for both Natural and LP gas at high altitudes.

Use LPM-08 (2 stage heat models) or LPM-07 (1 stage heat models) propane conversion kit for propane conversions at altitudes below 2000 feet. Natural gas installations below 2000 feet do not require a kit.

For propane conversions above 2000 feet, high altitude kit HA-03 is required in addtion to the propane conversion kit.

Natural gas and LP gas installations at altitudes > 2000 ft

INPUT/BURNER	HIGH ALTITUDE KIT	20,000 BTUH NAT/18,OOO BTUH LP							
		ELEVATION ABOVE SEA-LEVEL (FEET)							
		2000	3000	4000	4500	5000	6000	7000	8000
U.S. BURNER ORIFICE	HA-03	46/1.25MM	47/1.25MM	47/56	-	48/56	48/57	49/57	49/57
CANADA BURNER ORIFICE		-	-	-	48/56	-	-	-	-

S-313 TESTING IGNITION CONTROL MODULE

NOTE: Failure to earth ground the unit, or a high resistance connection in the ground may cause the control to lockout due to failure to flame sense.

WARNING

To avoid personal injury or death due to electric shock, wiring to the unit must be properly grounded. Disconnect power before installing or servicing.

Testing Direct Spark Ignition (DSI) Systems PCBAG127 Board

Heating Mode

Indoor thermostat calling for heat (15 second prepurge time and 7 second trial for ignition).

1. Check for 230 volts from L1 terminal of control module to L2. No voltage - check wire connections, continuity, etc.
2. Check for 24 volts at "R" to "C" thermostat terminals.
   a. No voltage - check 3 amp automotive type fuse on control board. A blown fuse could indicate a short in the 24 volt circuit (thermostat or limit circuit).
   b. Voltage Present - check limit and rollout (S-301 and S-302). If limit and rollout are closed, then check for 24 VAC at the gas valve terminals.
   c. No 24 VAC at gas valve - check 9 pin connector and wires from ignition control to gas valve. If wires and connections at 9 pin connector check good, replace ignition control.
   d. Voltage present at gas valve - replace gas valve.

LED Flashes/Status	System Condition
Off	Internal Control Fault, Micro Controller Detected Hardware Failure, or Gas Valve Detected Energized When it Should be De-energized
1	Lockout Due to Excessive Retries
2	Pressure Switch Stuck Open
3	Pressure Switch Stuck Closed
4	Open High Temperature Limit
5	Flame Present Outside the Flame Detect Mode
6	Compressor Short Cycle Delay Active
7	Limit Opened Five Times within the Same Call for Heat
8	Indoor Thermostat/Outdoor Thermostat is Open
9	Pressure Switch/Loss of Charge Switch is Open
Steady ON	Normal

Red LED Fault Codes

LED Flashes/Status	Flame Condition
2	Flame Present Outside the Flame Detect Mode
1	Low Flame Signal Current
Steady ON	Normal Flame
OFF	No Flame Present

Amber LED Flame Status Codes

SERVICING

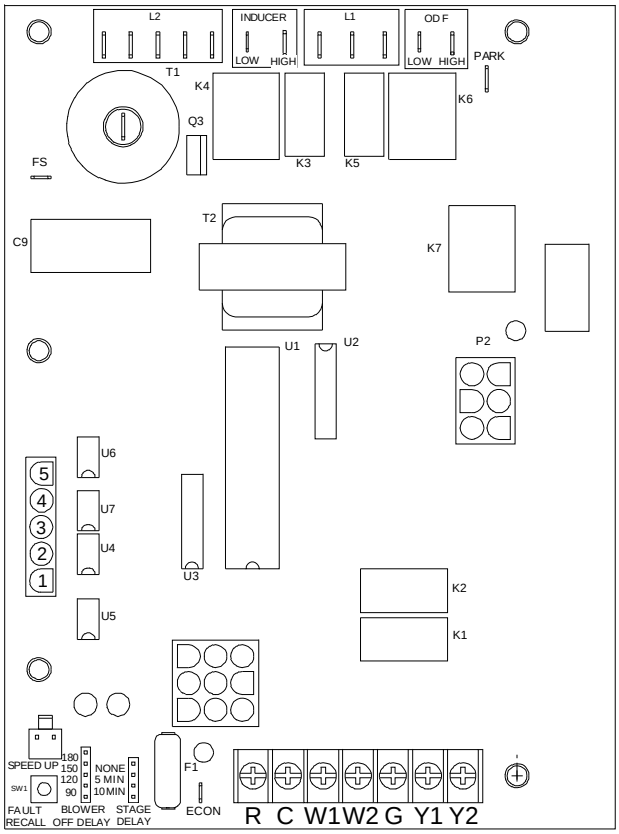

PCBAG127 DSI Control Board

S-314 CHECKING FLAME SENSOR

A flame sensing device is used in conjunction with the ignition control module to prove combustion. If a microamp signal is not present the control will de-energize the gas valve and "retry" for ignition or lockout.

DSI Direct Spark Ignition Systems

WARNING

HIGH VOLTAGE!
Disconnect ALL power before servicing or installing this unit. Multiple power sources may be present. Failure to do so may cause property damage, personal injury or death.

1. Disconnect the flame sensor wire from terminal FS of the ignition control module.

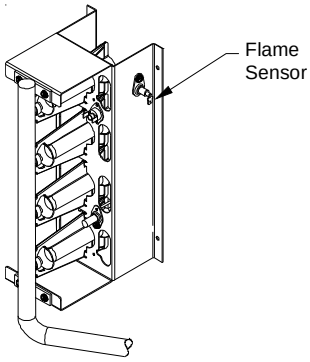

Flame Sensor

2. Connect a microamp meter in series with this wire and terminal FS.
3. Be sure the negative side of the meter is to the wire and the positive of the meter is to terminal FS.
4. Turn on Power.

WARNING

Line Voltage now present.

5. With Power ON, Place the unit into a heating cycle.
6. As soon as flame is established a microamp reading should be evident once proof of flame (microamp reading) is established, the hot surface ignitor will be de-energized.
7. The nominal microamp reading is 4 microamps.
8. If the microamp current is less than 0.5 microamp the control will lockout and flash a code of 1 flash after attempting to reestablish flame sense.
9. If the microamp reading is less than the minimum specified, check for high resistance wiring connections, the distance (3/16") between the sensor and burner, flame sensor connections, dirty flame sensor or poor grounding.
10. If no reading, check for continuity on all components and if good - replace ignition control module.

NOTE: Contaminated fuel or combustion air can create a nearly invisible coating on the flame sensor. This coating works as an insulator causing a loss in the flame sense signal. If this situation occurs the flame sensor must be cleaned with steel wool. Do not use sand paper, the silicone in sand paper will further contaminate the sensor.

WIRING DIAGRAMS GPG1460120M4E*

WARNING

HIGH VOLTAGE!
DISCONNECT ALL POWER BEFORE SERVICING OR INSTALLING THIS UNIT. MULTIPLE POWER SOURCES MAY BE PRESENT. FAILURE TO DO SO MAY CAUSE PROPERTY DAMAGE, PERSONAL INJURY OR DEATH.

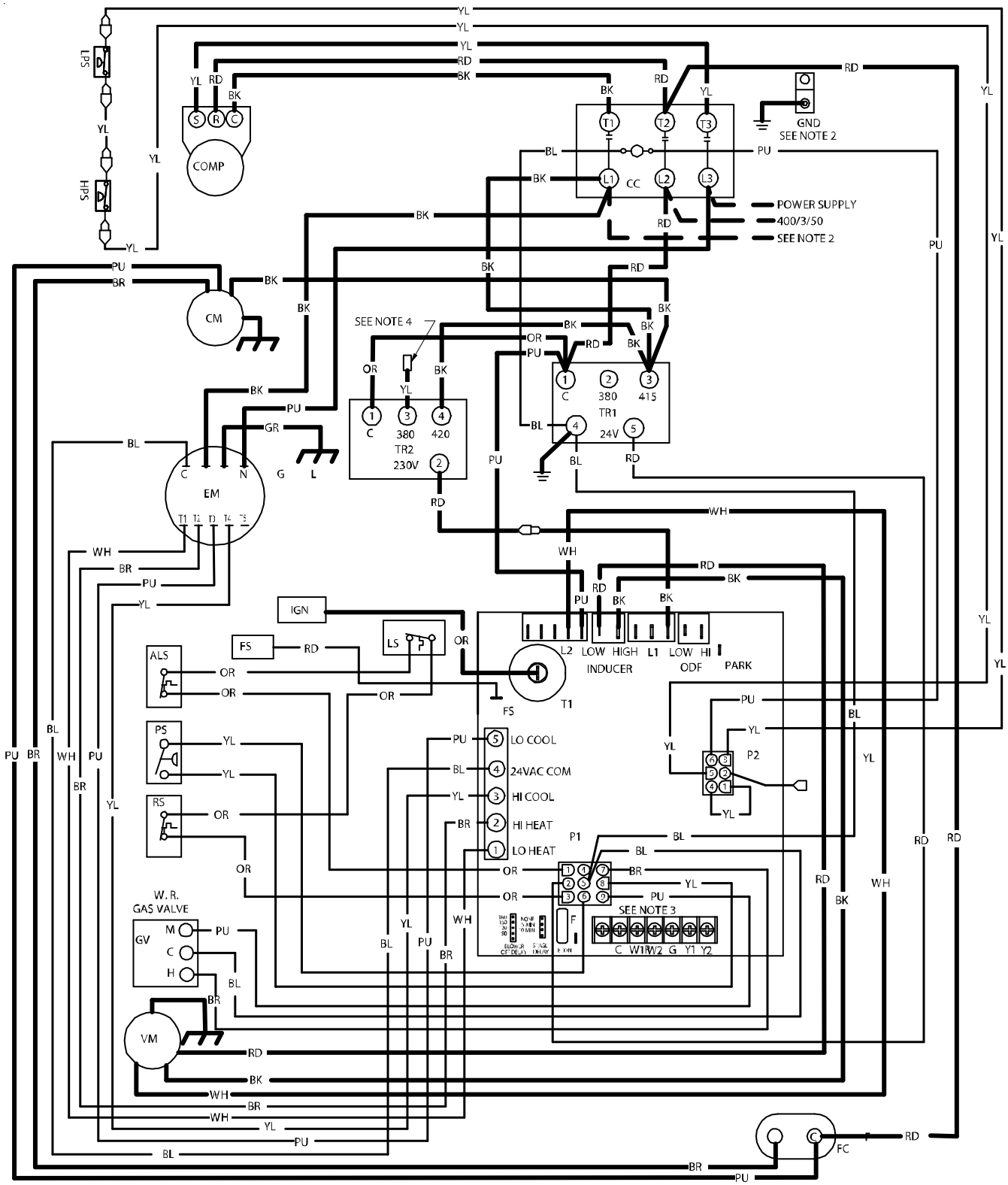

Wiring is subject to change. Always refer to the wiring diagram on the unit for the most up-to-date wiring.

WIRING DIAGRAMS GPG1460120M4E*

WARNING

HIGH VOLTAGE!
DISCONNECT ALL POWER BEFORE SERVICING OR INSTALLING THIS UNIT. MULTIPLE POWER SOURCES MAY BE PRESENT. FAILURE TO DO SO MAY CAUSE PROPERTY DAMAGE, PERSONAL INJURY OR DEATH.

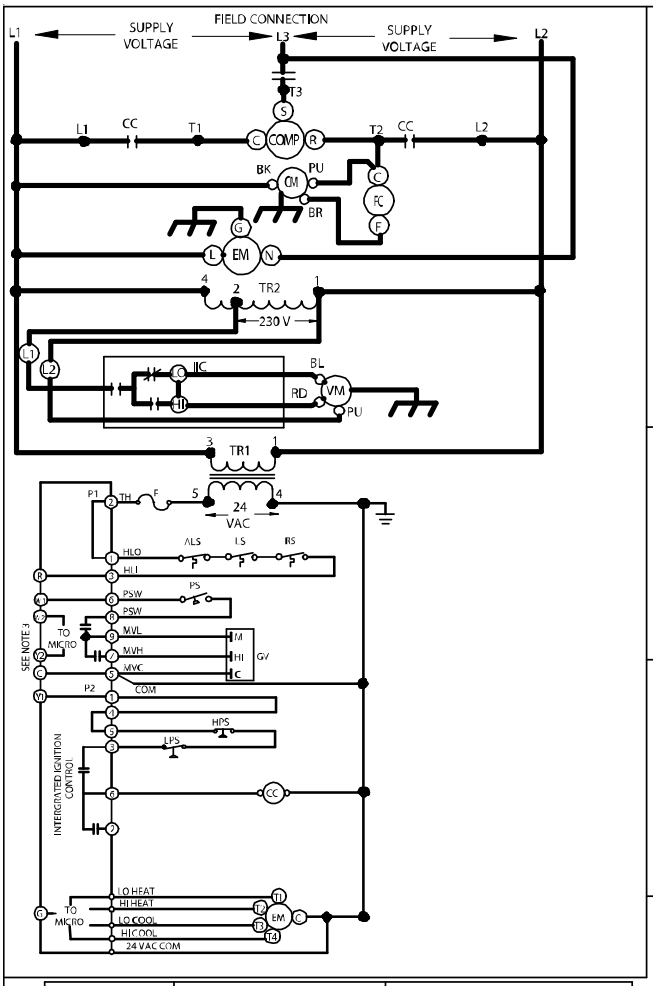

COMPONENT LEGEND

ALS	AUXILLARY LIMIT SWITCH	PSW	PRESSURE SWITCH
COMP	COMPRESSOR	HLO	HI LIMIT OUTPUT
CM	CONDENSER MOTOR	HLI	HI LIMIT INPUT
CC	COMPRESSOR CONTACTOR	TH	TRANSFORMER HIGH
EM	EVAPORATOR MOTOR	MVL	MAIN GAS VALVE LOW
F	FUSE	MVH	MAIN GAS VALVE HIGH
FS	FLAME SENSOR	MVC	MAIN GAS VALVE COMMON
FC	FAN CAPACITOR		
GND	EQUIPMENT GROUND		
GV	GAS VALVE		
HPS	HIGH PRESSURE SWITCH		
IIC	INTEGRATED IGNITION CONTROL		
IGN	IGNITOR		
LPS	LOW PRESSURE SWITCH		
LS	LIMIT SWITCH		
PS	PRESSURE SWITCH		
RS	ROLLOUT SWITCH		
TR 1	TRANSFORMER CONTROL		
TR 2	TRANSFORMER VM		
VM	VENT MOTOR		

FACTORY WIRING
- LINE VOLTAGE
- LOW VOLTAGE
- OPTIONAL HIGH VOLTAGE

FIELD WIRING
- HIGH VOLTAGE
- LOW VOLTAGE

WIRE CODE

BK	BLACK
BL	BLUE
BR	BROWN
GR	GREEN
OR	ORANGE
PK	PINK
PU	PURPLE
RD	RED
WH	WHITE
YL	YELLOW

JUNCTION
TERMINAL
INTERNAL TO INTEGRATED CONTROL
PLUG CONNECTION
SWITCH (PRESS.)
OVERCURRENT PROT. DEVICE
CUT AND ISOLATE
EQUIPMENT GROUND
FIELD GROUND
FIELD SPLICE
SWITCH (TEMP)
IGNITER

NOTES

1. REPLACEMENT WIRE MUST BE THE SAME SIZE AND TYPE OF INSULATION AS ORIGINAL.(USE COPPER CONDUCTOR ONLY).
2. USE COPPER CONDUCTORS ONLY
3. USE NEC CLASS 2 WIRE FOR THERMOSTAT FIELD WIRING.
4. YELLOW WIRE ON TR2 NOT USED, CUT AND ISOLATE.

DIAGNOSTIC LED - RED	STATUS	CHECK
ON	NORMAL OPERATION	-
OFF	NO POWER OR INTERNAL CONTROL FAULT	CHECK INPUT POWER CHECK FUSE(S) REPLACE CONTROL
1 FLASH	IGNITION FAILURE	GAS FLOW GAS PRESSURE GAS VALVE FLAME SENSOR
2 FLASHES	PRESSURE SWITCH OPEN	CHECK PRESSURE SWITCH CHECK TUBING CHECK VENT MOTOR
3 FLASHES	PRESSURE SWITCH CLOSED WITHOUT INDUCER ON	CHECK PRESSURE SWITCH CHECK WIRING FOR SHORTS
4 FLASHES	OPEN LIMIT SWITCH	CHECK AUXILIARY LIMIT SW. CHECK MAIN LIMIT SWITCH CHECK ROLLOUT LIMIT SW.
5 FLASHES	FALSE FLAME DETECTED	CHECK GAS VALVE CHECK FOR SHORTS IN FLAME SENSOR WIRING
6 FLASHES	COMPR. SHORT CYCLE DELAY	3 MIN COMP. SHORT CYCLE DELAY

DIAGNOSTIC LED - RED	STATUS	CHECK
7 FLASHES	LIMIT OPEN 5 TIMES IN SAME CALL FOR HEAT	CHECK MAIN LIMIT SWITCH CHECK AUXILIARY LIMIT SW.
8 FLASHES	IDT/ODT OPEN	CHECK JUMPER BETWEEN 1 AND 4 ON 6-CIRCUIT CONNECTOR CHECK OPTIONAL REFRIGERANT SWITCHES
9 FLASHES	PSW/LOC OPEN	CHECK REFRIGERANT SWITCHES FOR LOSS OF CHARGE OR HIGH HEAD PRESSURE

DIAGNOSTIC LED - AMBER	STATUS	CHECK
OFF	NO FLAME PRESENT	-
ON	NORMAL FLAME PRESENT	-
1 FLASH	LOW FLAME SIGNAL	GAS FLOW GAS PRESSURE GAS VALVE FLAME SENSOR
2 FLASHES	FALSE FLAME DETECTED	CHECK GAS VALVE CHECK FOR SHORTS IN FLAME SENSOR WIRING

0140G04539-A

Wiring is subject to change. Always refer to the wiring diagram on the unit for the most up-to-date wiring.