DAIKIN Service Instructions

Daikin 80% Modified Two Stage Gas Furnaces
DM80HS, DD80HS
& Accessories

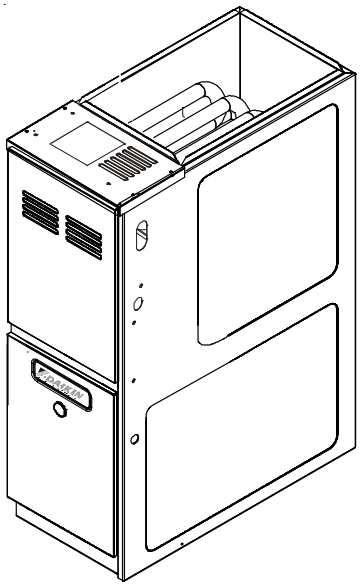

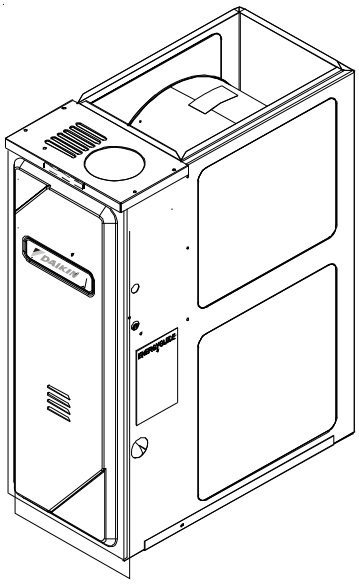

This manual is to be used by qualified, professionally trained HVAC technicians only. Daikin does not assume any responsibility for property damage or personal injury due to improper service procedures or services performed by an unqualified person.

RSD6621005r3
July 2018

Copyright © 2013 - 2014, 2016, 2018 DAIKIN COMPANY, L.P.

TABLE OF CONTENTS

IMPORTANT INFORMATION ..... 2 - 4
PRODUCT IDENTIFICATION ..... 5 - 8
ACCESSORIES ..... 9 - 12
OPERATING INSTRUCTIONS .....13 - 15
PRODUCT DESIGN .....16 - 35
SYSTEM OPERATION 36
TROUBLESHOOTING .....37 - 38
POLARIZATION AND PHASING 39
MAINTENANCE .....40 - 42
SERVICING .....43 - 60
SERVICING TABLE OF CONTENTS 45
SCHEMATICS 61
WIRING DIAGRAM.....62

IMPORTANT INFORMATION

Pride and workmanship go into every product to provide our customers with quality products. It is possible, however, that during its lifetime a product may require service. Products should be serviced only by a qualified service technician who is familiar with the safety procedures required in the repair and who is equipped with the proper tools, parts, testing instruments and the appropriate service manual. **REVIEW ALL SERVICE INFORMATION IN THE APPROPRIATE SERVICE MANUAL BEFORE BEGINNING REPAIRS.**

IMPORTANT NOTICES FOR CONSUMERS AND SERVICERS

RECOGNIZE SAFETY SYMBOLS, WORDS AND LABELS

WARNING

THIS UNIT SHOULD NOT BE CONNECTED TO, OR USED IN CONJUNCTION WITH, ANY DEVICES THAT ARE NOT DESIGN CERTIFIED FOR USE WITH THIS UNIT OR HAVE NOT BEEN TESTED AND APPROVED BY THE MANUFACTURER. SERIOUS PROPERTY DAMAGE OR PERSONAL INJURY, REDUCED UNIT PERFORMANCE AND/OR HAZARDOUS CONDITIONS MAY RESULT FROM THE USE OF DEVICES THAT HAVE NOT BEEN APPROVED OR CERTIFIED BY THE MANUFACTURER.

WARNING

ONLY PERSONNEL THAT HAVE BEEN TRAINED TO INSTALL, ADJUST, SERVICE OR REPAIR (HEREINAFTER, "SERVICE") THE EQUIPMENT SPECIFIED IN THIS MANUAL SHOULD SERVICE THE EQUIPMENT. THE MANUFACTURER WILL NOT BE RESPONSIBLE FOR ANY INJURY OR PROPERTY DAMAGE ARISING FROM IMPROPER SERVICE OR SERVICE PROCEDURES. IF YOU SERVICE THIS UNIT, YOU ASSUME RESPONSIBILITY FOR ANY INJURY OR PROPERTY DAMAGE WHICH MAY RESULT. IN ADDITION, IN JURISDICTIONS THAT REQUIRE ONE OR MORE LICENSES TO SERVICE THE EQUIPMENT SPECIFIED IN THIS MANUAL, ONLY LICENSED PERSONNEL SHOULD SERVICE THE EQUIPMENT. IMPROPER INSTALLATION, ADJUSTMENT, SERVICING OR REPAIR OF THE EQUIPMENT SPECIFIED IN THIS MANUAL, OR ATTEMPTING TO INSTALL, ADJUST, SERVICE OR REPAIR THE EQUIPMENT SPECIFIED IN THIS MANUAL WITHOUT PROPER TRAINING MAY RESULT IN PRODUCT DAMAGE, PROPERTY DAMAGE, PERSONAL INJURY OR DEATH.

WARNING

TO PREVENT THE RISK OF PROPERTY DAMAGE, PERSONAL INJURY, OR DEATH, DO NOT STORE COMBUSTIBLE MATERIALS OR USE GASOLINE OR OTHER FLAMMABLE LIQUIDS OR VAPORS IN THE VICINITY OF THIS APPLIANCE.

WARNING

HIGH VOLTAGE

DISCONNECT ALL POWER BEFORE SERVICING OR INSTALLING THIS UNIT. MULTIPLE POWER SOURCES MAY BE PRESENT. FAILURE TO DO SO MAY CAUSE PROPERTY DAMAGE, PERSONAL INJURY OR DEATH.

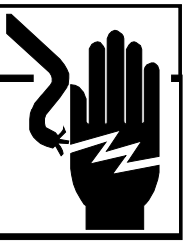

IMPORTANT INFORMATION

⚠ WARNING

IF THE INFORMATION IN THESE INSTRUCTIONS IS NOT FOLLOWED EXACTLY, A FIRE OR EXPLOSION MAY RESULT CAUSING PROPERTY DAMAGE, PERSONAL INJURY OR LOSS OF LIFE.

– DO NOT STORE OR USE GASOLINE OR OTHER FLAMMABLE VAPORS AND LIQUIDS IN THE VICINITY OF THIS OR ANY OTHER APPLIANCE.

– WHAT TO DO IF YOU SMELL GAS:

- DO NOT TRY TO LIGHT ANY APPLIANCE.
- DO NOT TOUCH ANY ELECTRICAL SWITCH; DO NOT USE ANY PHONE IN YOUR BUILDING.
- IMMEDIATELY CALL YOUR GAS SUPPLIER FROM A NEIGHBOR'S PHONE. FOLLOW THE GAS SUPPLIER'S INSTRUCTIONS.
- IF YOU CANNOT REACH YOUR GAS SUPPLIER, CALL THE FIRE DEPARTMENT.

– INSTALLATION AND SERVICE MUST BE PERFORMED BY A QUALIFIED INSTALLER, SERVICE AGENCY OR THE GAS SUPPLIER.

⚠ WARNING

SHOULD OVERHEATING OCCUR OR THE GAS SUPPLY FAIL TO SHUT OFF, TURN OFF THE MANUAL GAS SHUTOFF VALVE EXTERNAL TO THE FURNACE BEFORE TURNING OFF THE ELECTRICAL SUPPLY.

To locate an authorized servicer, please consult your telephone book or the dealer from whom you purchased this product. For further assistance, please contact:

CONSUMER INFORMATION LINE- DAIKIN BRAND PRODUCTS
TOLL FREE
1-877-254-4729 (U.S. only)
email us at: **customerservice@daikincomfort.com**
fax us at: (713) 856-1821
(Not a technical assistance line for dealers.)

Outside the U.S., call 1-713-861-2500
(Not a technical assistance line for dealers.)
Your telephone company will bill you for the call.

IMPORTANT INFORMATION

DANGER

CARBON MONOXIDE POISONING HAZARD

Special Warning for Installation of Furnace or Air Handling Units in Enclosed Areas such as Garages, Utility Rooms or Parking Areas

Carbon monoxide producing devices (such as an automobile, space heater, gas water heater, etc.) should not be operated in enclosed areas such as unventilated garages, utility rooms or parking areas because of the danger of carbon monoxide (CO) poisoning resulting from the exhaust emissions. If a furnace or air handler is installed in an enclosed area such as a garage, utility room or parking area and a carbon monoxide producing device is operated therein, there must be adequate, direct outside ventilation.

This ventilation is necessary to avoid the danger of CO poisoning which can occur if a carbon monoxide producing device continues to operate in the enclosed area. Carbon monoxide emissions can be (re)circulated throughout the structure if the furnace or air handler is operating in any mode.

CO can cause serious illness including permanent brain damage or death. B10259-216

DANGER
PELIGRO

RIESGO DE INTOXICACIÓN POR MONÓXIDO DE CARBONO

Advertencia especial para la instalación de calentadores ó manejadoras de aire en áreas cerradas como estacionamientos ó cuartos de servicio.

Los equipos ó aparatos que producen monóxido de carbono (tal como automóvil, calentador de gas, calentador de agua por medio de gas, etc) no deben ser operados en áreas cerradas debido al riesgo de envenenamiento por monóxido de carbono (CO) que resulta de las emisiones de gases de combustión. Si el equipo ó aparato se opera en dichas áreas, debe existir una adecuada ventilación directa al exterior.

Esta ventilación es necesaria para evitar el peligro de envenenamiento por CO, que puede ocurrir si un dispositivo que produce monóxido de carbono sigue operando en el lugar cerrado.

Las emisiones de monóxido de carbono pueden circular a través del aparato cuando se opera en cualquier modo.

El monóxido de carbono puede causar enfermedades severas como daño cerebral permanente ó muerte. B10259-216

DANGER

RISQUE D'EMPOISONNEMENT AU MONOXYDE DE CARBONE

Advertencia especial para la instalación de calentadores ó manejadoras de aire en áreas cerradas como estacionamientos ó cuartos de servicio.

Avertissement special au sujet de l'installation d'appareils de hauffage ou de traitement d'air dans des endroits clos, tets les garages, les locaux d'entretien et les stationnements. Evitez de mettre en marche les appareils produisant du monoxyde de carbone (tels que les automobile, les appareils de chauffage autonome,etc.) dans des endroits non ventilés tels que les d'empoisonnement au monoxyde de carbone. Si vous devez faire fonctionner ces appareils dans un endroit clos, assures-vous qu'il y ait une ventilation directe provenant de l'exterier.

Cette ventilation est nécessaire pour éviter le danger d'intoxication au CO pouvant survenir si un appareil produisant du monoxyde de carbone continue de fonctionner au sein de la zone confinée.

Les émissions de monoxyde de carbone peuvent etre recircules dans les endroits clos, si l'appareil de chauffage ou de traitement d'air sont en marche.

Le monoxyde de carbone peut causer des maladies graves telles que des dommages permanents au cerveau et meme la mort. B10259-216

PRODUCT IDENTIFICATION

The model and manufacturing number are used for positive identification of component parts used in manufacturing. Please use these numbers when requesting service or parts information.

D	M	8	0	H	S	0	6	0	3	B	N	A	A
1	2	3	4	5	6	7	8	9	10	11	12	13	14

Brand
- D - Daikin

Configuration
- M - Upflow/Horizontal
- C - Downflow/Horizontal
- K - Dedicated Upflow
- D - Dedicated Downflow

AFUE
- 97 - 97% AFUE
- 80 - 80% AFUE

Gas Valve
- M - Modulating
- V - 2 Stage
- H - Convertible 2 Stage
- S - Single Stage

Motor
- C - Variable Speed/ComfortNet
- E - High Efficiency
- S - Single Speed

MBTU/h
- 40 - 40,000
- 60 - 60,000
- 80 - 80,000
- 100 - 100,000
- 120 - 120,000

Minor Revision
- A - Initial Release
- B - 1st Revision

Major Revision
- A - Initial Release
- B - 1st Revision

Nox
- N - Natural Gas
- X - Low NOx

Cabinet Width
- A - 14"
- B - 17.5"
- C - 21"
- D - 24.5"

Maximum CFM
- 3 - 1200 CFM
- 4 - 1600 CFM
- 5 - 2000 CFM

PRODUCT IDENTIFICATION

MODEL#	MFG. #	80 % GAS FURNACES
DM80HS	DM80HS0403AXAA DM80HS0603AXAA DM80HS0604BXAA DM80HS0803BXAA DM80HS0804BXAA DM80HS0805CXAA DM80HS1005CXAA DM80HS1205DXAA DM80HS1405DXAA	Daikin brand 80% furnace, 33 3/8" tall, upflow / horizontal installation positions, induced draft. Daikin gray cabinet and panels. PSC multispeed motor. 120 volt silicon carbide hot surface ignition. Two stage gas valve with second stage timing controled
DM80HS	DM80HS0403AXAB DM80HS0603AXAB DM80HS0803BXAB	Daikin brand 80% furnace, 33 3/8" tall, upflow / horizontal installation positions, induced draft. Daikin gray cabinet and panels.Releases new Broad Ocean Motor 0131F00041 (1/3HP,4SP,6PL) Aluminum winding motor,

MODEL#	MFG. #	80 % GAS FURNACES
DD80HS	DD80HS0403AXAA DD80HS0603AXAA DD80HS0804BXAA DD80HS1005CXAA	Daikin brand 80% furnace, 33 3/8" tall, dedicated downflow installation, induced draft. Daikin gray cabinet and panels. PSC multispeed motor. 120 volt silicon carbide hot surface ignition. Two stage gas valve with second stage timing controled byintegrate
DD80HS	DD80HS0403AXAB DD80HS0603AXAB	Daikin brand 80% furnace, 33 3/8" tall, dedicated downflow installation positions, induced draft. Daikin gray cabinet and panels.Releases new Broad Ocean Motor 0131F00041 (1/3HP,4SP,6PL) Aluminum winding motor,

PRODUCT IDENTIFICATION

MODEL #	MFG #	DESCRIPTION
AFE18-60A	N/A	**Fossil Fuel Kit.** The AFE18-60A control is designed for use where the indoor coil is located above/downstream of a gas or fossil fuel furnace when used with a heat pump. It will operate with single and two stage heat pumps and single and two stage furnaces. The AFE18-60A control will turn the heat pump unit off when the furnace is turned on. An anti-short cycle feature initiates a 3 minute timed off delay when the compressor goes off.

MODEL #	MFG #	DESCRIPTION
EFR01	P1221001 P1221002F	**External Filter Rack Kit**. For use with upflow furnace models. This kit is intended to provide a location, external to the furnace casing, for installation of a permanent filter. The rack is mounted over the indoor air blower compartment area of either side panel, and provide filter retention as well as a location for attaching return air ductwork.
FTK04	FTK04	**Furnace Twinning Kit**. This kit allows Daikin Brand 80% gas furnaces to operate at the same time from a single thermostat. The two furnaces to be "twinned" must be the exact same model with their circulating air blowers set to deliver the same air flow at the same time. This kit cannot be used to control more than two furnaces.

MODEL #	MFG #	DESCRIPTION
HANG21	N/A	**High Altitude Natural Gas Kit.** The kit is designed to convert 80% gas furnace models fired at 20,000 Btu's per cell for higher altitudes. This kit is required when installing these furnaces above their maximum rated altitude.

PRODUCT IDENTIFICATION

MODEL #	MFG #	DESCRIPTION
LPLP03	N/A	**LP Gas Low Pressure Kit**. Designed for application on gas fired furnace products installed on LP gas listed in this manual. This kit includes harness adaptors to work with White-Rodgers single & two stage gas valves,Honeywell single and two-stage gas valves, as well as modulating gas valves.
LPT-06	N/A	**LP Conversion Kit**. This kit converts **only** two-stage gas fired units from natural to propane gas. This kit supports both White-Rodgers and Honeywell two stage valves. The conversion from natural gas (as shipped from the factory) to propane gas requires: replacing the burner orifices, replacing gas valve regulator springs (all two stage units) and applying identification labels. **NOx screens must be removed when converting 80% furnaces to this LP kit.**
MVK-01A **MVK-02A**	N/A	**Masonry Vent Kit.** For use with 80% AFUE, 33" tall "H" and "S" model furnaces installed in the upflow position only and will only be used with interior masonry chimneys. Kit incorporates a flue high limit safety switch which will interupt power to the gas valve when a backdraft condition exists.
SBT14 **SBT17** **SBT21**	N/A	**Downflow Subbase.** For use with 80% dedicated downflow furnace models. These kits are available for the following furnace widths: 14" wide (SBT14) 17.5" wide (SBT17) and 21" wide (SBT21).

ACCESSORIES

DAIKIN BRAND DM80HS DD80HS Model Furnace Accessories

MODEL NUMBER	EFR-01	AFE18-60A	LPLP03	HANG21	MVK-01	MVK-02	SBT14	SBT17	SBT21	FTK04	LPM-06
Description	EFR External Filter Rack	Dual Fuel Kit	LP Low Pressure Shut Off Kit	High Altitude Orifices W/Pressure Switch	Masonry Vent Kit	Masonry Vent Kit	Counterflow Base	Counterflow Base	Counterflow Base	Twinning Kit	LP Conversion Kit
DM80HS0403A*	■	■	■	(1)	■					■	(2)
DM80HS0603A*	■	■	■	(1)	■					■	(2)
DM80HS0604B*	■	■	■	(1)	■					■	(2)
DM80HS0803A**	■	■	■	(1)	■					■	(2)
DM80HS0804BC*	■	■	■	(1)	■					■	(2)
DM80HS0805C*	■	■	■	(1)	■					■	(2)
DM80HS1005C*	■	■	■	(1)	■					■	(2)
DM80HS1205D*	■	■	■	(1)		■				■	(2)
DM80HS1405D*	■	■	■	(1)		■				■	(2)
DD80HS0403A*		■	■	(1)			■			■	(2)
DD80HS0603A*		■	■	(1)			■			■	(2)
DD80HS0804B*		■	■	(1)				■		■	(2)
DD80HS1005C*		■	■	(1)					■	■	(2)

(2) W/R and H/W Gas Valves

(1) 5,500 - 10,000 ft altitude

EXTERNAL FILTER RACK KIT
(EFR01)

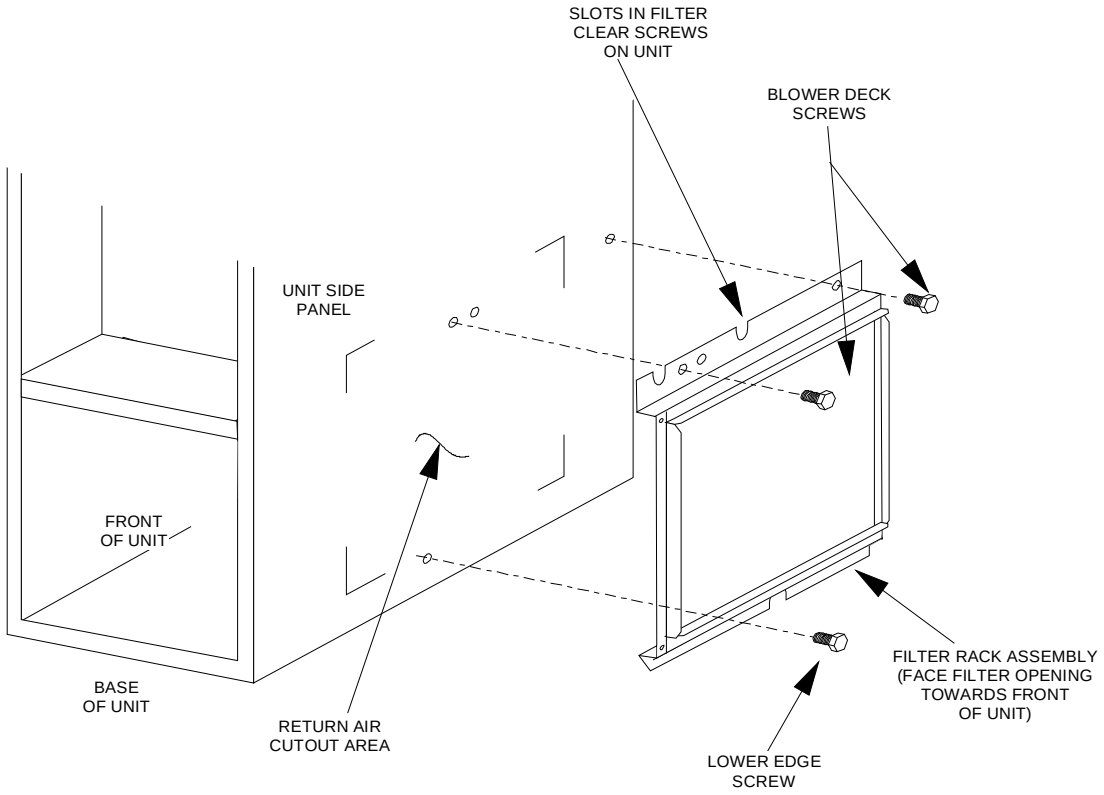

EFR01 EXTERNAL FILTER RACK KIT
Used on Models
80% Upflow Model Furnaces

ACCESSORY WIRING DIAGRAMS

WARNING

HIGH VOLTAGE!
DISCONNECT ALL POWER BEFORE SERVICING OR INSTALLING THIS UNIT. MULTIPLE POWER SOURCES MAY BE PRESENT. FAILURE TO DO SO MAY CAUSE PROPERTY DAMAGE, PERSONAL INJURY OR DEATH.

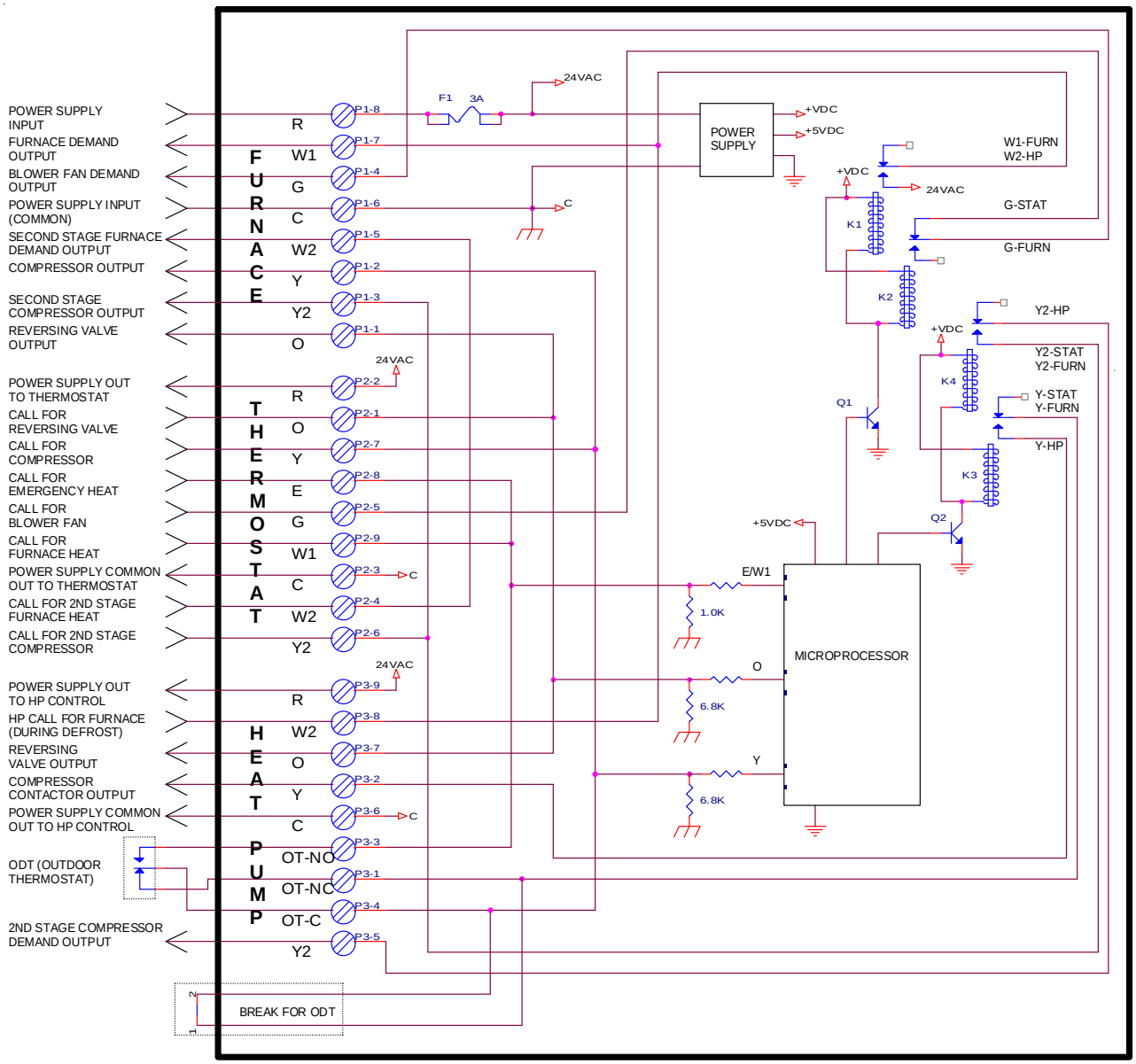

ALL FUEL SYSTEM CONTROL BOARD - AFE18-60A

This wiring diagram is for reference only. Not all wiring is as shown above.
Refer to the appropriate wiring diagram for the unit being serviced.
(For use with Heat Pumps in conjunction with 80% or 90% Single-Stage or Two-Stage Furnaces)

ACCESSORY WIRING DIAGRAMS

WARNING

HIGH VOLTAGE!
DISCONNECT ALL POWER BEFORE SERVICING OR INSTALLING THIS UNIT. MULTIPLE POWER SOURCES MAY BE PRESENT. FAILURE TO DO SO MAY CAUSE PROPERTY DAMAGE, PERSONAL INJURY OR DEATH.

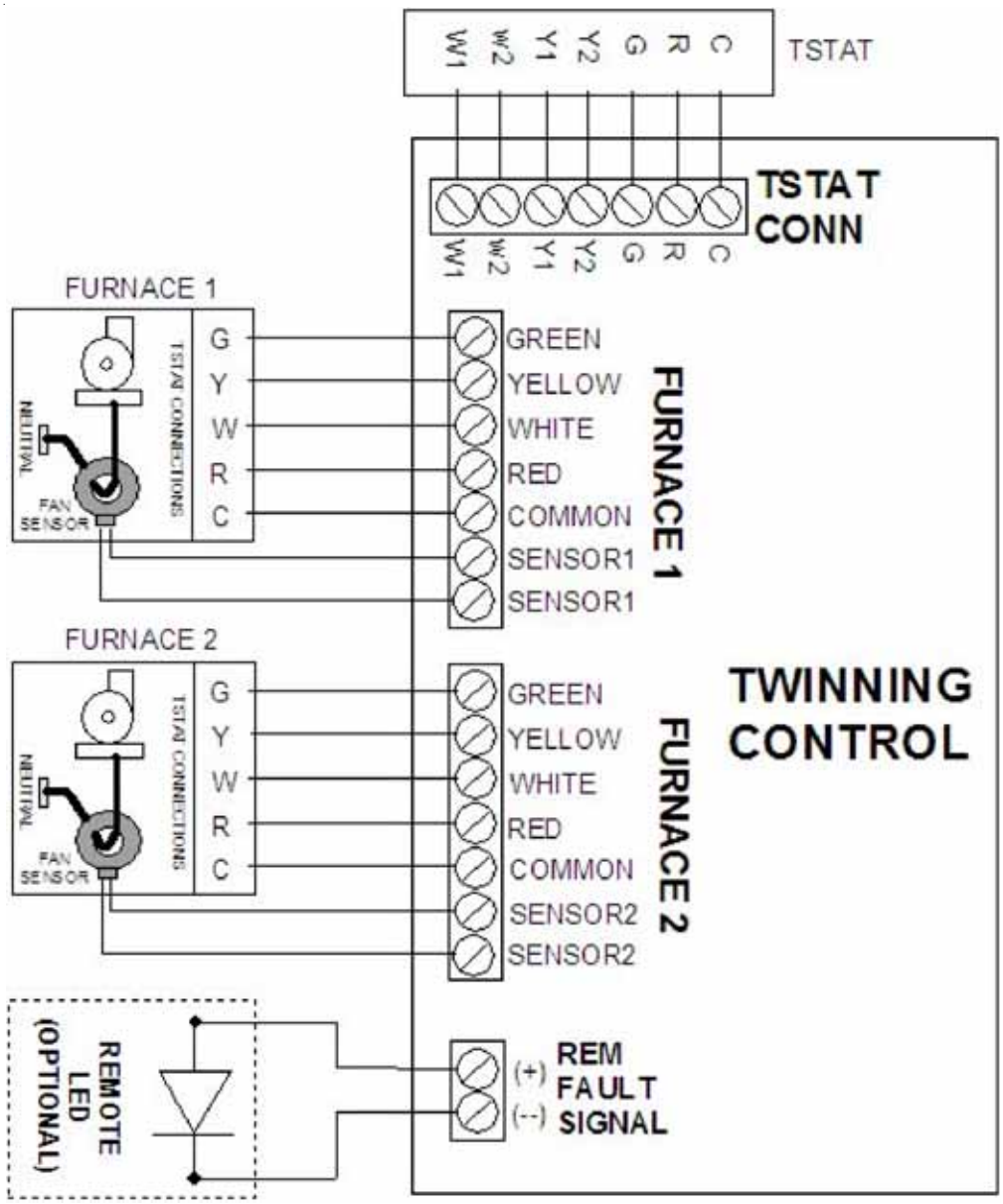

FURNACE TWINING KIT - FTK04 (UTEC Control Board)
This wiring diagram is for reference only. Not all wiring is as shown above.
Refer to the appropriate wiring diagram for the unit being serviced.
(For use only with 80% or 90% Single-Stage Furnaces)

OPERATING INSTRUCTIONS

FOR YOUR SAFETY READ BEFORE OPERATING

WARNING If you do not follow these instructions exactly, a fire or explosion may result causing property damage, personal injury or loss of life.

A. This appliance does not have a pilot. It is equipped with an ignition device which automatically lights the burners. Do not try to light the burners by hand.

B. BEFORE OPERATING smell around the appliance area for gas. Be sure to smell next to the floor because some gas is heavier than air and will settle on the floor.

WHAT TO DO IF YOU SMELL GAS

- Do not try to light any appliance.
- Do not touch any electric switch; do not use any telephone in your building.
- Immediately call your supplier from a neighbor's phone. Follow the gas suppliers instructions.
- If you cannot reach your gas supplier, call the fire department.

C. Use only your hand to move the gas control switch or knob. Never use tools. If the gas control switch or knob will not operate, don't try to repair it, call a qualified service technician. Force or attempted repair may result in a fire or explosion.

D. Do not use this appliance if any part has been under water. Immediately call a qualified service technician to inspect the appliance and to replace any part of the control system and any gas control which has been under water.

WARNING: Improper installation, adjustment, alteration, service or maintenance can cause injury or property damage. Refer to the user's information manual provided with this furnace. For assistance or additional information consult a qualified installer, service agency or the gas supplier.

This furnace must be installed in accordance with the manufacturers instructions and local codes. In the absence of local codes, follow the National Fuel Gas Code, ANSI Z223.1.

OPERATING INSTRUCTIONS

1. STOP! Read the safety information above on this label.
2. Set the thermostat to lowest setting.
3. Turn off all electric power to the appliance.
4. This appliance is equipped with an automatic ignition system which automatically lights the burners. Do not try to light the burners by hand.
5. Remove control access panel.
6. Move the gas control switch or knob to "OFF".

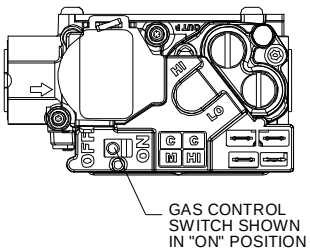

7. Wait five (5) minutes to clear out any gas. If you then smell gas, STOP! Follow "B" in the safety information above on this label. If you don't smell gas, go to the next step.
8. Move the gas control switch or knob to "ON".
9. Replace control access panel.
10. Turn on all electric power to the appliance.
11. Set the thermostat to the desired setting.
12. If the appliance will not operate, follow the instructions "To Turn Off Gas To Appliance" and call your service technician or gas supplier.

For indoor installation.

PGB & PGJ
For outdoor installation only.

WARNING: If not installed, operated and maintained in accordance with the manufacturer's instructions, this product could expose you to substances in fuel combustion which can cause death or serious illness and which are known to the State of California to cause cancer, birth defects or other reproductive harm. This product contains fiberglass insulation. Fiberglass insulation contains a chemical known by the State of California to cause cancer.

TO TURN OFF GAS TO APPLIANCE

1. Set the thermostat to its lowest setting.
2. Turn off all electric power to the appliance if service is to be performed.
3. Remove control access panel.
4. Move the gas control switch or knob to "OFF". Do not force.
5. Replace control access panel.

FOR YOUR SAFETY Do not store or use gasoline or other flammable vapors and liquids in the vicinity of this or any other appliance.

0140F00001P

OPERATING INSTRUCTIONS

CONSIGNES DÉ SECURITÉ - LIRE AVANT D'ALLUMER L'APPAREIL

AVERTISSEMENT: Le non-respect des instructions qui suivent peut entraîner un risque d'incendie ou d'explosion causant des dommages, des blessures ou la mort.

A. Cet appareil comporte pas de veilleuse. Il est muni d'un mécanisme qui allume automatiquement le brûleur. N'allumez paz le brûleur manuellement.

B. Sentir tout autour de l'appariel AVANT D'ALLUMER afin de déceler toute fuite de gaz. Assurez-vous de sentir tout près du plancher car certains gaz sont plus lourds que l'air et se déposeront sur le plancher.

SI VOUS SENTEZ UNE ODEUR DE GAZ:

- Ne tentez d'allumer aucun appariel.
- Ne touchez pas aux interrupteurs électriques; n'utiliser aucun téléphone dans l'édifice où vous vous trouvez.
- Appelez immédiatement votre fournisseur de gaz en utilisant le téléphone d'un voisin et suivez les instructions du fournisseur.
- Appelez les pompiers si vous ne parvenez pas à rejoindre votre fournisseur de gaz.

C. N'utiliser que votre main pour pousser ou tourner le commande du gaz. N'utilisez jamais d'outils. Si vous ne parvenez pas à pousser ou à tourner la commande, ne tentez pas de la réparer; appelez un réparateur qualifié. Forcer la commande ou essayer de la réparer peut entraîner un risque d'incendie ou d'explosion.

D. N'utilisez pas cet appareil si l'une de ses parties a été dans l'eau. Si cela se produit, demandez immédiatement à un réparateur qualifié d'inspecter l'appareil et de remplacer toute pièce du systeme de contrôle et toute commande de gaz ayant été dans l'eau.

0140F00002P

INSTRUCTIONS DE SERVICE

1. UN INSTANT! Lisez d'abord les consignes de sécurité ci-dessus.
2. Réglez le thermostat à son point le plus bas.
3. Coupez l'alimentation électrique de l'appareil.
4. Cet appareil est muni d'un mécanisme qui allume automatiquement le brûleur. Ne tentez pas d'allumer le brûleur manuellement.
5. Retirez le panneau d'accès de la commande.
6. Mettez la commande de gaz à la position ARRÊT ("OFF").
7. Attendez cinq (5) minutes afin de permettre à tout gaz présent d'être évacué. Si vous sentez une odeur de gaz à ce moment, ARRETÊZ! et suivez les consignes de sécurité données au paragraphe B ci-dessus. Si vous ne sentez pas de gaz, passez à l'étape suivante.
8. Mettez la commande de gaz à la position MARCHE ("ON").
9. Remettez la panneau d'accès de la commande en place.
10. Rétablissez l'alimenation électrique de l'appareil.
11. Réglez le thermostat à le température désirée.
12. Si l'appareil ne fonctionne pas, suivez les instructions intituleés "Arrêt du gaz" et appelez un réparateur qualifie ou votre fournisseur de gaz.

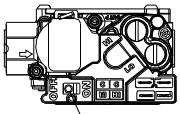

Commande de gaz en position "MARCHE"

ARRÊT DU GAZ

1. Réglez le thermostat à son point le plus bas.
2. Coupez l'alimentation électrique de l'appareil si vous devez effectuer un entretien.
3. Retirez le panneau d'accès de la commande.
4. Mettez la commande de gaz à la position ARRÊT ("OFF").
5. Remettez le panneau d'accès de la commande en place.

OPERATING INSTRUCTIONS

FOR YOUR SAFETY READ BEFORE OPERATING

WARNING: If you do not follow these instructions exactly,a fire or explosion may result causing property damage, personal injury or loss of life.

A. This appliance does not have a pilot. It is equipped with an ignition device which automatically lights the burner. Do not try to light the burner by hand.

B. BEFORE OPERATING smell all around the appliance area for gas. Be sure to smell next to the floor because some gas is heavier than air and will settle on the floor.

WHAT TO DO IF YOU SMELL GAS
- Do not try to light any appliance.
- Do not touch any electric switch; do not use any phone in your building.
- Immediately call your gas supplier from a neighbor's phone. Follow the gas supplier's instructions.
- If you cannot reach your gas supplier, call the fire department.

C. Use only your hand to push in or turn the gas control lever. Never use tools. If the lever will not push in or turn by hand, don't try to repair it, call a qualified service technician. Force or attempted repair may result in a fire or explosion.

D. Do not use this appliance if any part has been underwater. Immediately call a qualified service technician to inspect the appliance and to replace any part of the control system and any gas control which has been underwater.

LIRE AVANT DE METTRE EN MARCHELIRE

AVERTISSEMENT: Quiconque ne respecte pas à la lettre les instructions dans le presént manuel risque de déclencher un incendie ou une explosion entraînant des dommages matériels, des lesions corporelles ou la perte de vies humaines.

A.Cet appareil ne comporte pas de veilleuse. Il est muni d'un dispositif d'allumage qui allume automatiquement le brûleur. Ne pas tenter d'allumer le brûleur manuellement.

B. AVANT DE LE FAIRE FONCTIONNER, renifler tout autour de l'appariel pour decéler une odeur de gaz. Renifler prés du plancher, car certains gaz sont plus lourds que l'air et peuvent s'accumuler au niveau du sol.

QUE FAIRE S'IL Y A UNE ODEUR DE GAZ
- Ne pas tenter d'allumer d'appareils.
- Ne toucher à aucun interrupteur; ne pas vous servir des téléphones dans le bâtiment.
- Appelez immédiatement votre fournisseur de gaz depuis un voisin. Suivez les instructions du fournisseur de gaz
- Si vous ne pouvez rejoindre le fournisseur de gaz, appelez le service des incendies.»

C. Ne pousser ou tourner la manette d'admission du gaz qu'à la main. Ne jamais employer d'outil à cette fin. Si la manette reste coincée, ne tenter pas de la réparer; appelez un technicien qualifié. Quiconque tente de forcer la manette ou de la réparer peut provoquer une explosion ou un incendie.»

D. Ne pas se servir de cet appareil s'il a été plongé dans l'eau, même partiellement. Faire inspecter l'appareil par un technicien qualifié et remplacer toutr partie du systéme de contrôle et toute commande qui ont été plongées dans l'eau.»

OPERATING INSTRUCTIONS

1. STOP! Read the safety infrmation above on this label.
2. Set the thermostat to lowest setting.
3. Turn off all electric power to the appliance.
4. This appliance is equipped with an ignition device which automatically lights the burner. Do not try to light the burner by hand.
5. Push the gas control lever to "OFF" Position. Do not force.
6. Wait five (5) minutes to clear out any gas. Then smell for gas, including near the floor. If you then smell gas, STOP! Follow "B" in the safety. information above on this label if you don't smell gas, go to next step.
7. Push gas control lever to "ON".
8. Replace access panel.
9. Turn on all electric power to the appliance.
10. Set thermostat to desired setting.
11. If the appliance will not operate, follow the instructions "To Turn Off Gas To Appliance" and call your service technician or gas company.

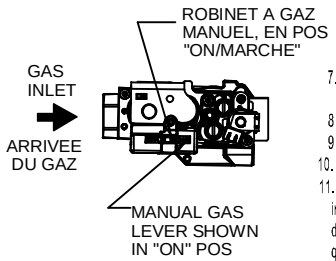

MISE EN MARCHE

1. ARRÊTEZ Lisez les instructions de sécurité dans la section supérieure de cette étiquette.
2. Régler le thermostat à la température la plus basse.
3. Couper l'alimentation électrique de l'appareil.
4. Cet appareil menager etant dote d'un systeme d'allumage automatique, ne pas essayer à allumer le brûleur manuellement.
5. Pousse le levier du contrÔle du gaz a "OFF/ ARRET" position.
6. Attendre cinq (5) minutes pour laisser echapper tout le gaz. Renifler tout autour de l'appareil, y compris prés du plancher, pour déceler une odeur de gaz. Si c'est le cas, ARRÊTEZ. Passer à l'etape B des instructions de securite sur la portion superieure de cette etiquette. S'il n'y a pas d'odeur de gaz, passer à l'etàpe suivante.
7. Pousse le levier du contrôle du gaz à "ON/MARCHE" position.
8. Remettre en place le panneau d'accés.
9. Mettre l'appareil sous tension.
10. Régler le thermostat à la température désirée.
11. Si l'appareil ne se met pas en marche, suivre les instructions intitulées Comment couper l'admission de gaz de l'appareil et appeler un technicien qualifié ou le fournisseur de gaz.

TO TURN OFF GAS TO APPLIANCE

1. Set the thermostat to lowest setting.
2. Turn off all electric power to the appliance if service is to be performed.
3. Push the gas control lever to "OFF" Position. Do not force.
4. Replace control access panel.

POUR COUPER L'ADMISSION DE GAZ DE L'APPAREIL

1. Régler le thermostat à la température la plus bassé.
2. Couper l'alimentation électrique de l'appareil s'il faut procéder à des operations d'entretien.
3. Pousse le levier du contrôle du gaz à "OFF/ ARRET" position. Ne pas forcer.
4. Remettre en place le panneau d'accés.

0140F00596 REV A

PRODUCT DESIGN

Safety

Please adhere to the following warnings and cautions when installing, adjusting, altering, servicing, or operating the furnace.

WARNING

TO PREVENT PERSONAL INJURY OR DEATH DUE TO IMPROPER INSTALLATION, ADJUSTMENT, ALTERATION, SERVICE OR MAINTENANCE, REFER TO THIS MANUAL. FOR ADDITIONAL ASSISTANCE OR INFORMATION, CONSULT A QUALIFIED INSTALLER, SERVICE AGENCY OR THE GAS SUPPLIER.

WARNING

THIS PRODUCT CONTAINS OR PRODUCES A CHEMICAL OR CHEMICALS WHICH MAY CAUSE SERIOUS ILLNESS OR DEATH AND WHICH ARE KNOWN TO THE STATE OF CALIFORNIA TO CAUSE CANCER, BIRTH DEFECTS OR OTHER REPRODUCTIVE HARM.

WARNING

TO PREVENT POSSIBLE PROPERTY DAMAGE, PERSONAL INJURY OR DEATH DUE TO ELECTRICAL SHOCK, THE FURNACE MUST BE LOCATED TO PROTECT THE ELECTRICAL COMPONENTS FROM WATER.

Charge (ESD) Precautions

NOTE: Discharge body's static electricity before touching unit. An electrostatic discharge can adversely affect electrical components.

Use the following precautions during furnace installation and servicing to protect the integrated control module from damage. By putting the furnace, the control, and the person at the same electrostatic potential, these steps will help avoid exposing the integrated control module to electrostatic discharge. This procedure is applicable to both installed and uninstalled (ungrounded) furnaces.

1. Disconnect all power to the furnace. Do not touch the integrated control module or any wire connected to the control prior to discharging your body's electrostatic charge to ground.
2. Firmly touch a clean, unpainted, metal surface of the furnace near the control. Any tools held in a person's hand during grounding will be discharged.
3. Service integrated control module or connecting wiring following the discharge process in Step 2. Use caution not to recharge your body with static electricity; (i.e., do not move or shuffle your feet, do not touch ungrounded objects, etc.). If you come in contact with an ungrounded object, repeat Step 2 before touching control or wires.
4. Discharge any static electricity from your body to ground before removing a new control from its container. Follow Steps 1 through 3 if installing the control on a furnace. Return any old or new controls to their containers before touching any ungrounded object.

Product Application

This product is designed for use as a residential home gas furnace. It is **not** designed or certified for use in mobile home, trailer, or recreational vehicle applications.

This furnace can be used in the following non-industrial commercial applications: **Schools, Office buildings, Churches, Retail stores, Nursing homes, Hotels/motels, Common or office areas.** In such applications, the furnace must be installed with the installation instructions.

Daikin 80% furnaces are ETL certified appliances and are appropriate for use with natural or propane gas. (**NOTE:** If using propane gas, a propane conversion kit is required).

IMPORTANT NOTE: The 80% furnace cannot be installed as a direct vent (i.e.., sealed combustion) furnace. The burner box is present only to help reduce sound transmission from the burners to the occupied space.

To ensure proper installation, operation and servicing, thoroughly read the installation and service manuals for specifics pertaining to the installation, servicing and application of this product.

WARNING

POSSIBLE PROPERTY DAMAGE, PERSONAL INJURY OR DEATH DUE TO FIRE, EXPLOSION, SMOKE, SOOT, CONDENSTAION, ELECTRICAL SHOCK OR CARBON MONOXIDE MAY RESULT FROM IMPROPER INSTALLATION, REPAIR, OPERATION, OR MAINTENANCE OF THIS PRODUCT.

WARNING

TO PREVENT PROPERTY DAMAGE, PERSONAL INJURY OR DEATH DUE TO FIRE, DO NOT INSTALL THIS FURNACE IN A MOBILE HOME, TRAILER, OR RECREATIONAL VEHICLE.

To ensure proper furnace operation, install, operate, maintain and service the furnace in accordance with the installation, operation and service instructions, all local building codes and ordinances. In their absence, follow the latest edition of the National Fuel Gas Code (NFPA 54/ANSI Z223.1), and/or CAN/CGA B149 Installation Codes, local plumbing or waste water codes, and other applicable codes.

A copy of the National Fuel Gas Code (NFPA 54/ANSI Z223.1) can be obtained from any of the following:

American National Standards Institute
1430 Broadway
New York, NY 10018

National Fire Protection Association
1 Batterymarch Park
Quincy, MA 02269

PRODUCT DESIGN

CSA International
8501 East Pleasant Valley
Cleveland, OH 44131

A copy of the CAN/CGA B149 Installation Codes can be obtained from:

CSA International
178 Rexdale Boulevard
Etobicoke, Ontario, Canada M9W, 1R3

The rated heating capacity of the furnace should be greater than or equal to the total heat loss of the area to be heated. The total heat loss should be calculated by an approved method or in accordance with "ASHRAE Guide" or "Manual J-Load Calculations" published by the Air Conditioning Contractors of America.

Location Requirements and Considerations

WARNING

TO PREVENT POSSIBLE EQUIPMENT DAMAGE, PROPERTY DAMAGE, PERSONAL INJURY OR DEATH, THE FOLLOWING BULLET POINTS MUST BE OBSERVED WHEN INSTALLING THE UNIT.

Follow the instructions listed below when selecting a furnace location. Refer also to the guidelines provided in the *Combustion and Ventilation Air Requirements* section in this manual or the installation instructions for details.

- Centrally locate the furnace with respect to the proposed or existing air distribution system.
- Ensure the temperature of the return air entering the furnace is between 55°F and 100°F when the furnace is heating.
- If the furnace is installed in an application where the typical operating sound level of a furnace is deemed objectionable, an optional sound reduction kit is available. Consult your local distributor for more details.
- Provide provisions for venting combustion products outdoors through a proper venting system. Special consideration should be given to vent/flue pipe routing and combustion air intake pipe when applicable.

  80% Furnaces: All installations must be vented in accordance with National Fuel Gas Code, NFPA 54/ ANSI Z223.1 - lateset edition. In Canada the furnaces must be vented in accordance with the National Standard of Canada, CAN/CGA B149.
- Ensure upflow or horizontal furnaces are not installed directly on carpeting, or any other combustible material. The only combustible material allowed is wood.
- A special accessory subbase must be used for upright counterflow unit installations over any combustible material (including wood). Refer to subbase instructions for installation details. (**NOTE:** A subbase will not be required if an air conditioning coil is located beneath the furnace between the supply air opening and the combustible floor.
- Exposure to contaminated combustion air will result in safety and performance-related problems. Do not install the furnace where the combustion air is exposed to the following substances:

  chlorinated waxes or cleaners
  chlorine-based swimming pool chemicals
  water softening chemicals
  deicing salts or chemicals
  carbon tetrachloride
  halogen type refrigerants
  cleaning solutions (such as perchloroethylene)
  printing inks
  paint removers
  varnishes
  hydrochloric acid
  cements and glues
  antistatic fabric softeners for clothes dryers
  and masonry acid washing materials
- Seal off a *non-direct vent* furnace if it is installed near an area frequently contaminated by any of the above substances. This protects the *non-direct vent* furnace from airborne contaminants. To ensure that the enclosed *non-direct vent* furnace has an adequate supply of combustion air, vent from a nearby uncontaminated room or from outdoors. Refer to the *Combustion and Ventilation Air Requirements* section in this manual or the installation instructions for details.
- If the furnace is used in connection with a cooling unit, install the furnace upstream or in parallel with the cooling unit coil. Premature heat exchanger failure will result if the cooling unit coil is placed ahead of the furnace.
- If the furnace is installed in a residential garage, position the furnace so that the burners and ignition source are located not less than 18 inches (457 mm) above the floor. Protect the furnace from physical damage by vehicles.
- If the furnace is installed horizontally, the furnace access doors must be vertical so that the burners fire horizontally into the heat exchanger. Do not install the unit with the access doors on the "up/top" or "down/bottom" side of the furnace.

Clearances and Accessibility

Installations must adhere to the clearances to combustible materials to which this furnace has been design certified. The minimum clearance information for this furnace is provided on the unit's clearance label. These clearances must be permanently maintained. Refer to Specification Sheet for minimum clearances to combustible materials. Clearances must also accommodate an installation's gas, electrical, and drain trap and drain line connections. **NOTE:** In addition to the required clearances to combustible materials, a minimum of 24 inches service clearance must be available in front of the unit.

PRODUCT DESIGN

A furnace installed in a confined space (i.e., a closet or utility room) must have two ventilation openings with a total minimum free area of 0.25 square inches per 1,000 BTU/hr of furnace input rating. One of the ventilation openings must be within 12 inches of the top; the other opening must be within 12 inches of the bottom of the confined space. In a typical construction, the clearance between the door and door frame is usually adequate to satisfy this ventilation requirement.

Furnace Suspension

If suspending the furnace from rafters or joist, use 3/8" threaded rod and 2”x2”x1/8” angle iron as shown in the following figure. If the furnace is installed in a crawl space it must also be suspended from the floor joist or supported by a concrete pad. Never install the furnace on the ground or allow it to be exposed to water. The length of rod will depend on the application and the clearances necessary.

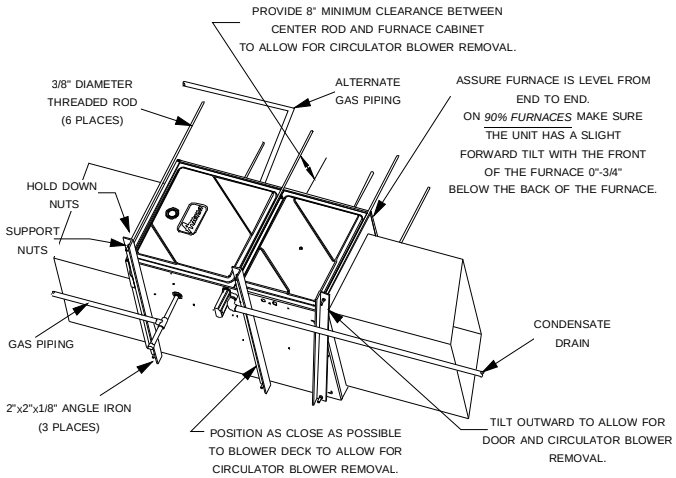

Suspended Furnace

Existing Furnace Removal

NOTE: When an existing furnace is removed from a venting system serving other appliances, the venting system may be too large to properly vent the remaining attached appliances.

The following vent testing procedure is reproduced from the **American National Standard/National Standard of Canada for Gas-Fired Central Furnaces ANSI Z21.47, latest edition, CSA-2.3b, latest edition Section 1.23.1.**

The following steps shall be followed with each appliance connected to the venting system placed in operation, while any other appliances connected to the venting system are not in operation:

a. Seal any unused openings in the venting system;

b. Inspect the venting system for proper size and horizontal pitch, as required by the National Fuel Gas Code, ANSI Z223.1 or the CSA B149 Installation Codes and these instructions. Determine that there is no blockage or restriction, leakage, corrosion and other deficiencies which could cause an unsafe condition;

c. In so far as practical, close all building doors and windows and all doors between the space in which the appliance(s) connected to the venting system are located and other spaces of the building. Turn on clothes dryers and any appliance not connected to the venting system. Turn on any exhaust fans, such as range hoods and bathroom exhausts, so they shall operate at maximum speed. Do not operate a summer exhaust fan. Close fireplace dampers;

d. Follow the lighting instructions. Place the appliance being inspected in operation. Adjust thermostat so appliance shall operate continuously;

e. Test for draft hood equipped spillage at the draft hood relief opening after 5 minutes of main burner operation. Use the flame of a match or candle;

f. After it has been determined that each appliance connected to the venting system properly vents when tested as outlined above, return doors, windows, exhaust fans, fireplace dampers and any other gas burning appliance to their previous conditions of use;

g. If improper venting is observed during any of the above tests, the common venting system must be corrected.

Corrections must be in accordance with the latest edition of the National Fuel Gas Code NFPA 54/ANSI Z223.1 and/or CSA B149 Installation Codes.

If resizing is required on any portion of the venting system, use the appropriate table in Appendix G in the latest edition of the National Fuel Gas Code ANSI Z223.1 and/or CSA B149 *Installation Codes.*

Thermostat Requirements

A high quality single stage thermostat with a common terminal is recommended.

Thermostat Location

In an area having good air circulation, locate the thermostat and dehumidistat (if applicable) about five feet high on a vibration-free inside wall. Do not install the thermostat or dehumidistat where it may be influenced by any of the following:

- Drafts, or dead spots behind doors, in corners, or under cabinets.
- Hot or cold air from registers.
- Radiant heat from the sun.
- Light fixtures or other appliances.
- Radiant heat from a fireplace.
- Concealed hot or cold water pipes, or chimneys.
- Unconditioned areas behind the thermostat and dehumidistat, such as an outside wall.

Consult the instructions packaged with the thermostat and dehumidistat for mounting instructions and further precautions.

PRODUCT DESIGN

COMBUSTION AND VENTILATION AIR REQUIREMENTS

WARNING

POSSIBLE PROPERTY DAMAGE, PERSONAL INJURY OR DEATH MAY OCCUR IF THE FURNACE IS NOT PROVIDED WITH ENOUGH FRESH AIR FOR PROPER COMBUSTION AND VENTILATION OF FLUE GASES. MOST HOMES REQUIRE OUTSIDE AIR BE SUPPLIED TO THE FURNACE AREA.

Improved construction and additional insulation in buildings have reduced heat loss by reducing air infiltration and escape around doors and windows. These changes have helped in reducing heating/cooling costs but have created a problem supplying combustion and ventilation air for gas fired and other fuel burning appliances. Appliances that pull air out of the house (clothes dryers, exhaust fans, fireplaces, etc.) increase the problem by starving appliances for air.

If this furnace is to be installed in the same space with other gas appliances, such as a water heater, ensure there is an adequate supply of combustion and ventilation air for the other appliances. Refer to the latest edition of the National Fuel Gas Code NFPA 54/ANSI Z223.1 (Section 9.3), or CAN/CGA B149 Installation Codes (Sections 7.2, 7.3, or 7.4), or applicable provisions of the local building codes for determining the combustion air requirements for the appliances.

Most homes will require outside air be supplied to the furnace area by means of ventilation grilles or ducts connecting directly to the outdoors or spaces open to the outdoors such as attics or crawl spaces.

The following information on air for combustion and ventilation is reproduced from the **National Fuel Gas Code NFPA 54/ANSI Z223.1 Section 9.3.**

9.3* Air for Combustion and Ventilation.

9.3.1 General.

9.3.1.1 Air for combustion, ventilation, and dilution of flue gases for appliances installed in buildings shall be obtained by application of one of the methods covered in 9.3.2 through 9.3.6. Where the requirements of 9.3.2 are not met, outdoor air shall be introduced in accordance with methods covered in 9.3.3 through 9.3.6.

Exception No. 1: This provision shall not apply to direct vent appliances.

9.3.1.2 Appliances of other than natural draft design and other than Category 1 vented appliances shall be provided with combustion, ventilation, and dilution air in accordance with the appliance manufacturer's instructions.

9.3.1.3 Appliances shall be located so as not to interfere with proper circulation of combustion, ventilation, and dilution air.

9.3.1.4 Where used, a draft hood or a barometric draft regulator shall be installed in the same room or enclosure as the appliance served so as to prevent any difference in pressure between the hood or regulator and the combustion air supply.

9.3.1.5 Makeup air requirements for the operation of exhaust fans, kitchen ventilation systems, clothes dryers, and fireplaces shall be considered in determining the adequacy of a space to provide combustion air requirements.

9.3.2 Indoor Combustion Air. The required volume of indoor air shall be determined in accordance with the method in 9.3.2.1 or 9.3.2.2 except that where the air infiltration rate is known to be less than 0.40 *ACH*, the method in 9.3.2.2 shall be used. The total required volume shall be the sum of the required volume calculated for all appliances located within the space. Rooms communicating directly with the space in which the appliances are installed through openings not furnished with doors, and through combustion air openings sized and located in accordance with 9.3.2.3, are considered a part of the required volume.

9.3.2.1* Standard Method. The minimum required volume shall be 50 ft^3 per 1,000/Btu/hour ($4.8 m^3$/kW).

9.3.2.2* Known Air Infiltration Rate Method. Where the air infiltration rate of a structure is known, the minimum required volume shall be determined as follows:

(1) For appliances other than fan-assisted, calculate using the following equation:

$$\text{Required Volume}_{other} \geq \frac{21\ ft^3}{ACH}\left(\frac{I_{other}}{1000\ \text{Btu/hr}}\right)$$

(2) For fan-assisted appliances, calculate using the following equation:

$$\text{Required Volume}_{fan} \geq \frac{15\ ft^3}{ACH}\left(\frac{I_{fan}}{1000\ \text{Btu/hr}}\right)$$

where:

I_{other} = all appliances other than fan-assisted input in Btu per hour

I_{fan} = fan-assisted appliances input in Btu per hour

ACH = air change per hour (percent of volume of space exchanged per hour, expressed as a decimal)

(3) For purposes of this calculation, an infiltration rate greater than 0.60 *ACH* shall not be used in the equations in 9.3.2.2(1) and 9.3.2.2(2).

9.3.2.3 Indoor Opening Size and Location. Openings used to connect indoor spaces shall be sized and located in accordance with the following:

(1)* *Combining spaces on the same story.* Each opening shall have a minimum free area of 1 $in.^2$/1000Btu/hr (2200 mm^2/kW) of the total input rating of all appliances in the space but not less than 100 $in.^2$ (0.60m^2). One opening shall commence within 12 in. (300 mm) of the top, and one opening shall commence within 12 in. (300 mm) of the bottom, of the enclosure *[see Figure A.9.3.2.3(1)]*. The minimum dimension of air openings shall be not less than 3 in. (80 mm).

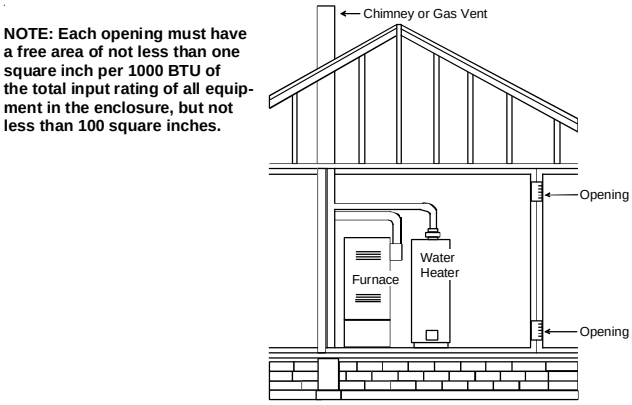

Figure A.9.2.3.3.(1) All Combustion Air from Adjacent Indoor Spaces through Indoor Combustion Air Openings.

(2) *Combining spaces in different stories*. The volumes of spaces in different stories shall be considered as communicating spaces where such spaces are connected by one or more openings in doors or floors having a total minimum free area of 2 in.^{2}/1000 Btu/hr (4400 mm^2/kW) of total input rating of all appliances.

9.3.3 Outdoor Combustion Air. Outdoor combustion air shall be provided through opening(s) to the outdoors in accordance with the methods in 9.3.3.1 or 9.3.3.2. The minimum dimension of air openings shall not be less than 3 in. (80 mm).

9.3.3.1 Two Permanent Openings Method. Two permanent openings, one commencing within 12 in. (300 mm) of the top and one commencing within 12 in. (300 mm) of the bottom, of the enclosure shall be provided. The openings shall communicate directly, or by ducts, with the outdoors or spaces that freely communicate with the outdoors, as follows:

(1)* Where directly communicating with the outdoors or where communicating to the outdoors through vertical ducts, each opening shall have a minimum free area of 1 in.^{2}/4000 Btu/hr (550 min^2/kW) of total input rating of all appliances in the enclosure. *[See Figure A.9.3.3.1(1)(a) and Figure A.9.3.3.1(1)(b).]*

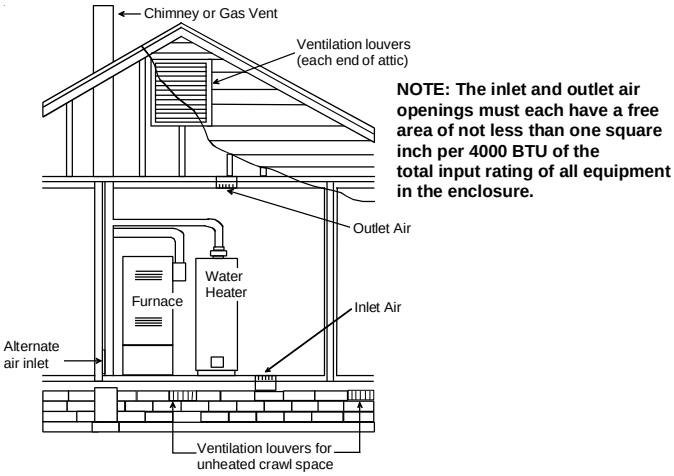

Figure A.9.3.3.1(1)(a) All Combustion Air From Outdoors - Inlet Air from Ventilated Crawl Space and Outlet Air to Ventilated Attic.

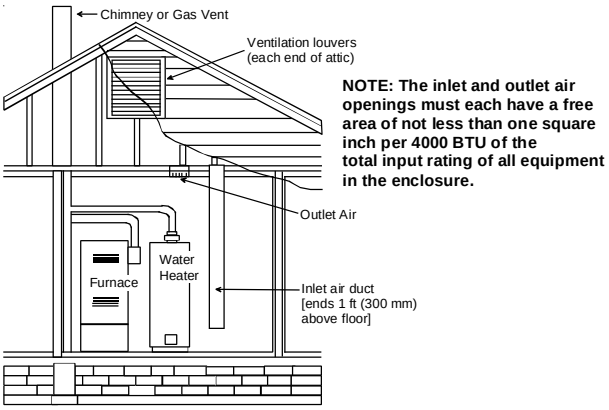

Figure A.9.3.3.1(1)(b) All Combustion Air From Outdoors through Ventilated Attic.

(2)* Where communicating with the outdoors through horizontal ducts, each opening shall have a minimum free area of 1 in.^{2}/2000 Btu/hr (1100 min^2/kW) of total input rating of all appliances in the enclosure. *[See Figure A.9.3.3.1(2).]*

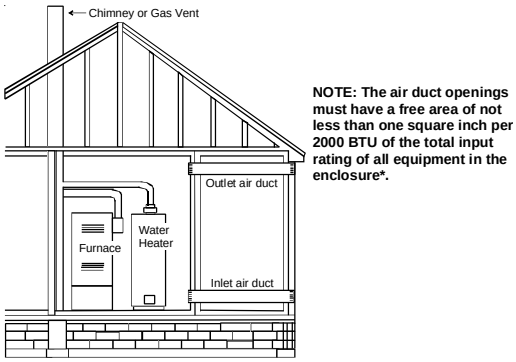

Figure A.9.3.3.1(2) All Combustion Air From Outdoors through Horizontal Ducts.

9.3.3.2* One Permanent Opening Method. One permanent openings, commencing within 12 in. (300 mm) of the top of the enclosure, shall be provided. The appliance shall have clearances of at least 1 in. (25 mm) from the sides and back and 6 in. (150 mm) from the front of the appliance. The opening shall directly communicate with the outdoors or shall communicate through a vertical or horizontal duct to the outdoors or spaces that freely communicate with the outdoors *(see Figure A.9.3.3.2)* and shall have a minimum free area of the following:

(1) 1 in.^{2}/3000 Btu/hr (700 mm^2 per kW) of the total input rating of all appliances located in the enclosure, and

(2) Not less than the sum of the areas of all vent connectors in the space.

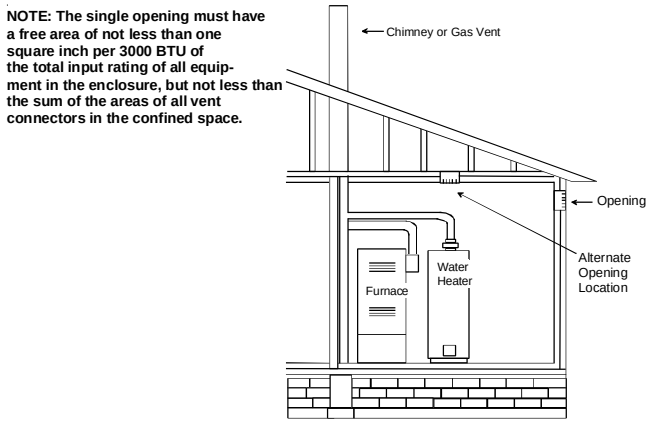

Figure A.9.3.3.2 All Combustion Air From Outdoors through Single Combustion Air Opening.

9.3.4 Combination Indoor and Outdoor Combustion Air. The use of a combination of indoor and outdoor combustion air shall be in accordance with (1) through (3) *(see example calculation in Annex J]:*

(1) *Indoor Openings:* Where used, openings connecting the interior spaces shall comply with 9.3.2.3.
(2) *Outdoor Opening(s) Location.* Outdoor opening(s) shall be located in accordance with 9.3.3.
(3) *Outdoor Opening(s) Size.* The outdoor opening(s) size shall be calculated in accordance with the following:
   (a) The ratio of the interior spaces shall be the available volume of all communicating spaces divided by the required volume.
   (b) The outdoor size reduction factor shall be 1 minus the ratio of interior spaces.
   (c) The minimum size of outdoor opening(s) shall be the full size of outdoor opening(s) calculated in accordance with 9.3.3, multiplied by the reduction factor. The minimum dimension of air openings shall not be less than 3 in. (80 mm).

9.3.5 Engineered Installations. Engineered combustion air installations shall provide an adequate supply of combustion, ventilation, and dilution air and shall be approved by the authority having jurisdiction.

9.3.6 Mechanical Combustion Air Supply. Where all combustion air is provided by a mechanical air supply system, the combustion air shall be supplied form outdoors at the minimum rate of 0.35 ft^3/min per 1000 Btu/hr (0.034 m^3/min per kW) for all appliances located within the space.

9.3.6.1 Where exhaust fans are installed, additional air shall be provided to replace the exhausted air.

9.3.6.2 Each of the appliances served shall be interlocked to the mechanical air supply system to prevent main burner operation where the mechanical air supply system is not in operation.

9.3.6.3 Where combustion air is provided by the building's mechanical ventilation system, the system shall provide the specified combustion air rate in addition to the required ventilation air.

9.3.7 Louvers, Grilles, and Screens.

9.3.7.1 Louvers and Grilles. The required size of openings for combustion, ventilation, and dilution air shall be based on the net free area of each opening. Where the free area through a design of louver or grille or screen is known, it shall be used in calculating the size opening required to provide the free area specified. Where the louver and grille design and free area are not known, it shall be assumed that wood louvers will have 25 percent free area, and metal louvers and grilles will have 75 percent free area. Nonmotorized louvers and grilles shall be fixed in the open position.

9.3.7.2 Minimum Scree Mesh Size. Screens shall not be smaller than 1/4 in. mesh.

9.3.7.3 Motorized Louvers. Motorized louvers shall be interlocked with the appliance so they are proven in the full open position prior to main burner ignition and during main burner operation. Means shall be provided to prevent the main burner form igniting should the louver fail to open during burner startup and to shut down the main burner if the louvers close during burner operation.

9.3.8 Combustion Air Ducts. Combustion air ducts shall comply with 9.3.8.1 through 9.3.8.8.

9.3.8.1 Ducts shall be constructed of galvanized steel or a material having equivalent corrosion resistance, strength, and rigidity.

Exception: Within dwellings units, unobstructed stud and joist spaces shall not be prohibited from conveying combustion air, provided that not more than one fireblock is removed.

9.3.8.2 Ducts shall terminate in an unobstructed space, allowing free movement of combustion air to the appliances.

9.3.8.3 Ducts shall serve a single space.

9.3.8.4 Ducts shall not serve both upper and lower combustion air openings where both such openings are used. The separation between ducts servicing upper and lower combustion air openings shall be maintained to the source of combustion air.

9.3.8.5 Ducts shall not be screened where terminating in an attic space.

9.3.8.6 Horizontal upper combustion air ducts shall not slope downward toward the source of combustion air.

9.3.8.7 The remaining space surrounding a chimney liner, gas vent, special gas vent, or plastic piping installed within a masonry, metal, or factory built chimney shall not be used to supply combustion air.

Exception: Direct vent appliances designed for installation in a solid fuel-burning fireplace where installed in accordance with the manufacture's installation instructions.

9.3.8.8 Combustion air intake openings located on the exterior of the building shall have the lowest side of the combustion air intake openings located at least 12 in. (300 mm) vertically from the adjoining grade level.

PRODUCT DESIGN

Category I Venting (Vertical Venting)
(80% Furnaces Only)

WARNING

TO PREVENT POSSIBLE PERSONAL INJURY OR DEATH DUE TO ASPHYXIATION, NON-CONDENSING GAS FIRED WARM AIR FURNACES MUST BE CATEGORY I VENTED. DO NOT VENT ANY OF THESE FURNACES USING CATEGORY III VENTING.

Category I Venting is venting at a non-positive pressure. A furnace vented as Category I is considered a fan-assisted appliance and does not have to be "gas tight." **NOTE:** Single-Stage and Two-Stage gas furnaces with induced draft blowers draw products of combustion through a heat exchanger allowing in some instances common venting with natural draft appliances (i.e. water heaters).

All installations must be vented in accordance with National Fuel Gas Code NFPA 54/ANSI Z223.1 - latest edition. In Canada, the furnaces must be vented in accordance with the National Standard of Canada, CAN/CGA B149.1 and CAN/CGA B149.2 - latest editions and amendments.

NOTE: The vertical height of the Category I venting system must be at least as great as the horizontal length of the venting system.

WARNING

TO PREVENT POSSIBLE DEATH OR PERSONAL INJURY DUE TO ASPHYXIATION, COMMON VENTING WITH OTHER MANUFACTURER'S INDUCED DRAFT APPLIANCES IS NOT ALLOWED.

When an existing furnace is removed from a venting system serving other appliances, the venting system may be too large to properly vent the remaining attached appliances. For complete details refer to *Exisiting Furnace Removal* section of this manual.

When resizing any portion of the common venting system, use the appropriate table in Appendix G in the latest edition of the National Fuel Gas Code NFPA 54/ANSI Z223.1.

Upflow or Horizontal units are shipped with the induced draft blower discharging from the top of the furnace ("Top" is as viewed for an upflow installation). The induced draft blower can be rotated 90 degrees for Category I venting. Refer to the following figure. For horizontal installations, a four inch single wall pipe can be used to extend the induced draft blower outlet 1/2" beyond the furnace cabinet. Vent the furnace in accordance with the National Fuel Gas Code NFPA 54/ANSI Z223.1 - latest edition. In Canada, vent the furnace in accordance with the National Standard of Canada, CAN/CGA B149.1 and CAN/CGA B149.2 - latest editions and amendments.

WARNING

TO PREVENT DEATH OR SERIOUS ILLNESS TO BUILDING OCCUPANTS DUE TO FLUE PRODUCTS LEAKING INTO THE BUILDING, PROPER INSTALLATION OF GASKETS AND SCREWS IS ESSENTIAL FOR PROVIDING A GAS TIGHT SEAL BETWEEN THE PARTITION PANEL AND THE INDUCED DRAFT BLOWER.

Make sure all wires are at least one inch from flue pipe. Relocate junction box to right side of cabinet if necessary. Refer to *Electrical Connections* section of this manual for instructions.

Masonry Chimneys

WARNING

POSSIBILITY OF PROPERTY DAMAGE, PERSONAL INJURY OR DEATH
- DAMAGING CONDENSATION CAN OCCUR INSIDE MASONRY CHIMNEYS WHEN A SINGLE FAN ASSISTED CATEGORY 1 APPLIANCE (80%AFUE FURNACE) IS VENTED WITHOUT ADEQUATE DILUTION AIR. DO NOT CONNECT AN 80% FURNACE TO A MASONRY CHIMNEY UNLESS THE FURNACE IS COMMON VENTED WITH THE DRAFT HOOD EQUIPPED APPLIANCE, OR THE CHIMNEY IS LINED WITH A METAL LINER OR B METAL VENT. ALL INSTALLATIONS USING MASONRY CHIMNEYS MUST BE SIZED IN ACCORDANCE WITH THE APPROPRIATE VENTING TABLES.

IF AN 80% FURNACE IS COMMON VENTED WITH THE DRAFT HOOD EQUIPPED APPLIANCE, THE POTENTIAL FOR CONDENSATION DAMAGE MAY STILL EXIST WITH EXTREMELY COLD CONDITIONS, LONG VENT CONNECTORS, EXTERIOR CHIMNEYS, OR ANY COMBINATION OF THESE CONDITIONS. THE RISK OF CONDENSATION DAMAGE IS BEST AVOIDED BY USING THE MASONRY CHIMNEY AS A PATHWAY FOR PROPERLY SIZED METAL LINER OR B METAL VENT.

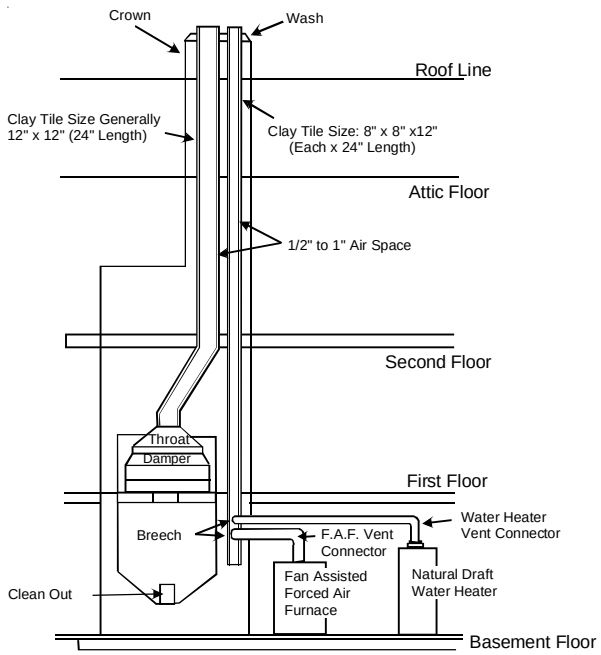

Typical Multiple Flue Clay Tile Chimney

PRODUCT DESIGN

Checklist Summary

This checklist serves as a summary of the items to be checked before venting an 80% furnace into a masonry chimney. In addition, we recommend that a qualified serviceman use this checklist to perform a yearly inspection of the furnace venting system.

This checklist is only a summary. For detailed information on each of the procedures mentioned, see the paragraph referenced with each item.

This inspection is based upon a draft topical report, "Masonry Chimney Inspection and Relining", issued by the Gas Research Institute. While not yet finalized, we believe this report represents the best information on this subject which is currently available.

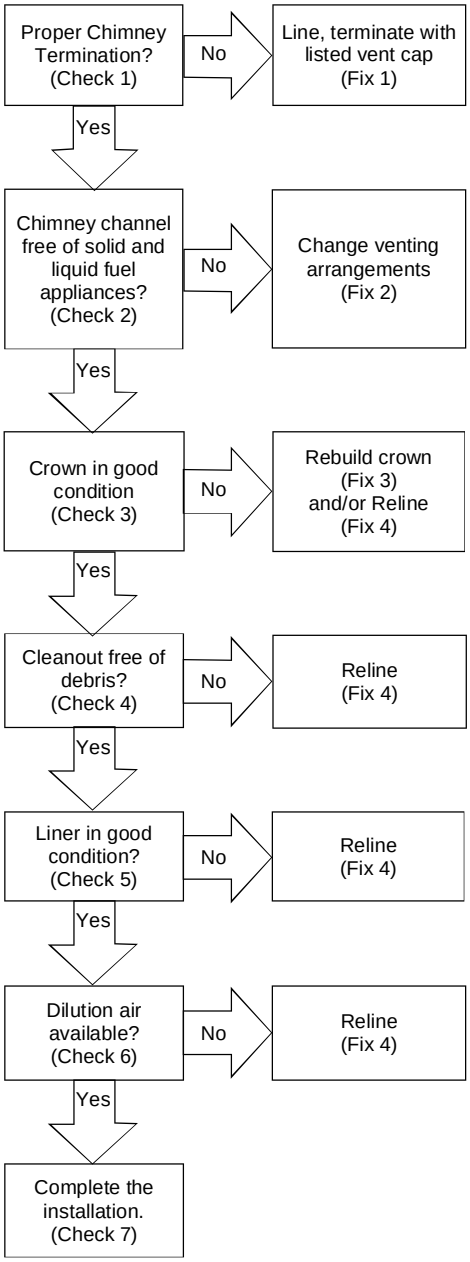

Check 1 - Proper chimney termination.

A masonry chimney used as a vent for gas fired equipment must extend at least three feet above the highest point where it passes through the roof. It must extend at least two feet higher than any portion of a building within a horizontal distance of 10 feet. In addition, the chimney must terminate at least 3 feet above any forced air inlet located within 10 feet. The chimney must extend at least five feet above the highest connected equipment draft hood outlet or flue collar.

If the chimney does not meet these termination requirements, but all other requirements in the checklist can be met, it may be possible for a mason to extend the chimney. If this will not be practical, see Fix 1.

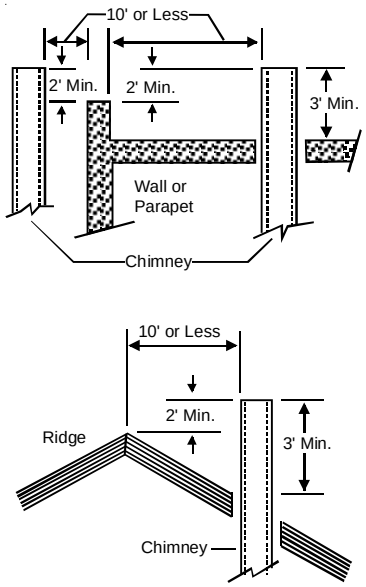

Termination 10 Feet Or Less From Ridge, Wall or Parapet

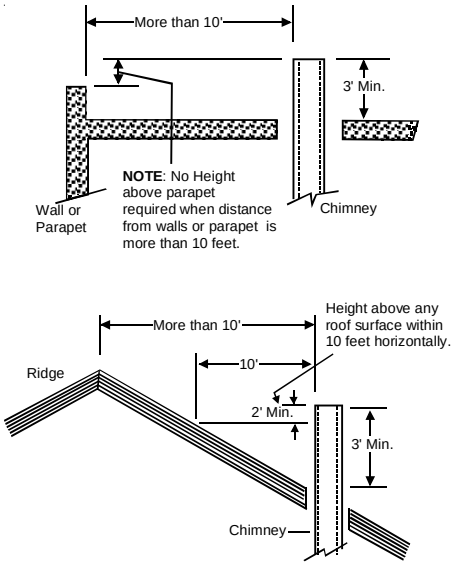

Termination More Than 10 Feet From Ridge, Wall or Parapet

Check 2 - Any solid or liquid fuel appliances vented into this chimney channel.

Solid fuel appliances include fireplaces, wood stoves, coal furnaces, and incinerators.

Liquid fuel appliances include oil furnaces, oil-fired boilers and oil-fired water heaters.

Appliances which burn propane (sometimes referred to as LP (liquefied petroleum)) gas are considered gas-fired appliances.

Check 3 - Chimney Crown Condition.

Damage from condensate usually shows up first in the crown. If any of the following trouble signs are present, the condition of the crown is not satisfactory:

a) Crown leaning
b) Bricks missing
c) Mortar missing
d) Tile liner cracked
e) No tile liner
f) Salt staining at mortar joints. (White stains, and mortar becomes sandy and/or erodes.)

For problems a, b, or c, see Fix 3. If problems d, e, or f are present, see Fix 4. **IMPORTANT:** It may be necessary to follow both Fix 3 and Fix 4.

Check 4 - Debris in Cleanout

A cleanout (dropleg) must be present such that the upper edge of the cleanout cover is at least 12 inches below the lower edge of the lowest chimney inlet opening.

A chimney without a cleanout could become partially blocked by debris. If no cleanout is present, the chimney must be relined (Fix 4).

Remove the cleanout cover, and examine the cleanout for debris. If significant amounts of any of the following are found:

- Fuel oil residue
- Bricks
- Mortar or sand
- Pieces of the tile liner
- Rusted pieces of the metallic liner

reline the chimney (Fix 4).

Check 5 - Liner Condition.

If a metal liner is present, it must be checked. It cannot be assumed that all existing metal liners are correctly installed and in good condition.

Remove the lowest existing vent connector, and examine the inside of the elbow or tee at the base of the liner. A small amount of soot may be considered acceptable, provided the installer vacuums it away. If rusted pieces of the liner have collected here, the metal liner must be removed and replaced (Fix 4).

Next, gently tap the inside of the liner with a Phillips screwdriver. If the screwdriver perforates the liner, or if the tapping does not sound like metal hitting metal, the liner must be removed and replaced (Fix 4).

Remember that all appliances must be vented inside the liner. Venting one appliance inside the liner and another appliance outside the liner is not acceptable.

Next, use a flashlight and small mirror to sight up the liner. B vent must be supported so as to not come into direct contact with the chimney walls or tile liner. If it is not, it can probably be rehung so as to be acceptable. A thimble or fire stop may be helpful here.

Flexible liners should be hung straight or nearly straight. If it is spiraled in the chimney and in good condition, it should be rehung. To do this, break the top seal; pull up and cut off the excess liner length, and refit the top seal. Use caution when doing this, as the cut edges of flexible liners may be sharp.

The surfaces of the liner must be physically sound. If gaps or holes are present, the metal liner must be removed and replaced (Fix 4).

Finally, confirm that the metal liner is the correct size for the appliances to be installed. Use the GAMA tables and rules.

If a metal liner is not present, a clay tile liner must be present, or the chimney must be lined (Fix 4).

Use a flashlight and small mirror at the cleanout or vent connector to inspect the clay tile liner. If any of the following problems are present:

- Tile sections misaligned
- Tile sections missing
- Gaps between tile sections
- Signs of condensate drainage at the cleanout or vent connectors
- Mortar protruding from between tile sections
- Use of sewer pipe or drainage pipe rather than an approved fire clay tile

reline the chimney (Fix 4).

Next, measure the size of the liner. It may be possible to do this from the cleanout. The liner must be at least as large as the minimum size established by the tables in National Fuel Gas Code NFPA 54/ANSI Z223.1 - latest edition and in the National Standard of Canada, CAN/CGA B149.1 and CAN/CGA B149.2 - latest editions and amendments. If the liner is too small or too large, then the chimney must be relined (Fix 4).

Check 6 - Dilution Air.

If gas-fired appliances are to be vented into a clay tile liner, a source of dilution air is required.

Dilution air cannot be obtained through:

- Induced draft appliances
- Natural draft appliances with vent dampers

Sufficient dilution air can ordinarily be obtained through the draft hood of a natural draft appliance only if the appliance's vent connector does not include a vent damper.

If dilution air will not be available, the chimney must be relined (Fix 4).

PRODUCT DESIGN

Check 7 - Complete the Installation.

If Checks 1 through 6 have been satisfactory, and the liner is an acceptable size as determined by the tables in National Fuel Gas Code NFPA 54/ANSI Z223.1 - latest edition and in the National Standard of Canada, CAN/CGA B149.1 and CAN/CGA B149.2 - latest editions and amendments, then the clay tile liner can probably be used as a vent for the gas appliances. However, the installer must keep in mind the following factors which may render the tile liner unsuitable for use as a vent:

- Extremely cold weather
- Long vent connectors
- Masonry chimneys with no air gap between the liner and the bricks. (In practice, this can be difficult to detect.)
- Exterior chimneys (The tables in National Fuel Gas Code NFPA 54/ANSI Z223.1 - latest edition and in the National Standard of Canada, CAN/CGA B149.1 and CAN/CGA B149.2 - latest editions and amendments assume interior chimneys.)

If, in the judgment of the local gas utility, installer, and/or local codes; one or more of the above factors is likely to present a problem, the chimney must be relined (Fix 4).

Fix 1 - Liner Termination.

Any cap or roof assembly used with a liner must be approved by the liner manufacturer for such use. The liner and cap/roof assembly must then terminate above the roof in accordance with the manufacturer's instructions.

In some cases, a shorter extension above the roof may be possible with a liner than would be required with a masonry chimney.

For further information on relining, see Fix 4.

Fix 2 - Change Venting Arrangements

If the masonry chimney has more than one channel, it may be possible to vent the gas appliances into one channel and vent the solid or liquid fuel appliance(s) into another channel(s). Do not vent an 80% furnace inside of a metal liner with other appliances vented outside the liner.

Alternatively, the homeowner may agree to discontinue use of the fireplace (solid fuel appliance). If so, the tile liner must be cleaned to remove creosote buildup. The fireplace opening must then be permanently sealed.

If oil-fired appliance(s) are being replaced by gas-fired appliance(s), the tile liner must first be cleaned to remove the fuel oil residue.

If none of the above options are practical, the 80% furnace may need to be vented vertically with B vent.

Under some conditions a 90%+ furnace could be installed rather than an 80%. The 90% furnace can be vented horizontally or vertically through PVC pipe.

Fix 3 - Rebuild the Crown.

If the chimney crown is damaged, a qualified mason must repair it in accordance with nationally recognized building codes or standards. One such standard which may be referenced is the Standard for Chimneys, Fireplaces, Vents, and Solid Fuel Burning Appliances, ANSI/NFPA 211.

Fix 4 - Relining.

Relining options include B vent and flexible liners.

If the chimney has diagonal offsets, B vent probably cannot be used.

If B vent is to be used, it must be supported adequately. Supports (such as fire stops or thimbles) must be used to prevent the B vent from coming into direct contact with the tile liner or chimney walls. Direct contact would result in higher heat loss, with an increased possibility of poor venting system performance.

It is not acceptable to vent one appliance inside the B vent and other appliances outside. The excess space between the B vent and the chimney walls must be covered at the top of the chimney by a weatherproof, corrosion resistant flashing.

The B vent should then be topped with a listed vent cap. The listed vent cap will, when installed per the manufacturer's instructions, prevent problems due to rain, birds, or wind effects.

A B vent installed as described in this section is considered to be an enclosed vent system, and the sizing tables in National Fuel Gas Code NFPA 54/ANSI Z223.1 - latest edition and in the National Standard of Canada, CAN/CGA B149.1 and CAN/CGA B149.2 - latest editions and amendments may be used.

If a flexible liner is to be used, it must be made of the proper materials:

- For most residential applications, an aluminum liner should be acceptable.
- If the combustion air supplied to the furnace will be contaminated with compounds containing chlorine or fluorine, a liner of AL29-4C stainless steel should be used. Common sources of chlorine and fluorine compounds include indoor swimming pools and chlorine bleaches, paint strippers, adhesives, paints, varnishes, sealers, waxes (which are not yet dried) and solvents used during construction and remodeling. Various commercial and industrial processes may also be sources of chlorine/fluorine compounds.
- Heavier gauge 300 and 400 series stainless steel liners were developed for use with oil or solid fuel appliances. They are not suitable for use with gas-fired appliances. Flexible liners specifically intended and tested for gas applications are listed in the UL "Gas and Oil Equipment Directory". (UL Standard 1777).

For sizing of flexible liners, see Note 22 and the tables in the National Fuel Gas Code NFPA 54/ANSI Z223.1 - latest edition and in the National Standard of Canada, CAN/CGA B149.1 and CAN/CGA B149.2 - latest editions and amendments.

PRODUCT DESIGN

To install the liner, read and follow the liner manufacturer's instructions and your local codes. Excess liner length should be pulled out of the chimney and cut off. Use caution when doing this, as the cut edges of flexible liners may be sharp. Do not spiral excess liner inside of the chimney. Support the liner as recommended by the liner manufacturer.

Some manufacturers of flexible liners offer an insulation sleeve designed to be added to the liner before it is installed in the chimney. (Poured insulation, either vermiculite or other materials, is no longer recommended.) Insulation will need to be added to the flexible liner if:

- It is required by the liner manufacturer's instructions.
- The previous liner was properly sized and installed, and suffered from condensation damage.
- It is required by your local building codes.

Even if none of those three conditions exist which require additional liner insulation, the installer may wish to consider it if:

- The local climate is very cold.
- The chimney is very tall.
- The vent connectors used are very long or have a large number of elbows.
- Local experience indicates that flexible liners installed without insulation are likely to have condensation problems.

Insulation must be selected and installed in accordance with the liner manufacturer's instructions.

Finally, cap the chimney and terminate the liner in accordance with the liner manufacturer's instructions.

Horizontal Applications and Considerations

Horizontal applications, in particular, may dictate many of the installation's specifics such as airflow direction, ductwork connections, and flue pipe connections.

Alternate Electrical and Gas Line Connections

Furnaces have provisions allowing for electrical and gas line connections through either side panel. In horizontal applications the connections can be made either through the "top" or "bottom" of the furnace.

Propane Gas and/or High Altitude Installations

WARNING

POSSIBLE PROPERTY DAMAGE, PERSONAL INJURY OR DEATH MAY OCCUR IF THE CORRECT CONVERSION KITS ARE NOT INSTALLED. THE APPROPRIATE KITS MUST BE APPLIED TO INSURE SAFE AND PROPER FURNACE OPERATION. ALL CONVERSIONS MUST BE PERFORMED BY A QUALIFIED INSTALLER OR SERVICE AGENCY.

This furnace is shipped from the factory configured for natural gas at standard altitude. Propane gas installations require an orifice change to compensate for the energy content difference between natural and propane gas.

High altitude installations may require both a pressure switch and an orifice change. These changes are necessary to compensate for the natural reduction in the density of both the gas fuel and the combustion air at higher altitude.

Refer to the *Accessories Charts* in this manual or product Specification Sheet for a tabular listing of appropriate manufacturer's kits for propane gas and/or high altitude installations. The indicated kits must be used to insure safe and proper furnace operation. All conversions must be performed by a qualified installer, or service agency.

WARNING

FAILURE TO FOLLOW THESE INSTRUCTIONS CAN RESULT IN BODILY INJURY OR DEATH. CAREFULLY READ AND FOLLOW ALL INSTRUCTIONS GIVEN IN THIS SECTION.

WARNING

UPON COMPLETION OF THE FURNACE INSTALLATION, CAREFULLY INSPECT THE ENTIRE FLUE SYSTEM BOTH INSIDE AND OUTSIDE THE FURNACE TO ASSURE IT IS PROPERLY SEALED. LEAKS IN THE FLUE SYSTEM CAN RESULT IN SERIOUS PERSONAL INJURY OR DEATH DUE TO EXPOSURE TO FLUE PRODUCTS, INCLUDING CARBON MONOXIDE.

GAS SUPPLY AND PIPING

The furnace rating plate includes the approved furnace gas input rating and gas types. The furnace must be equipped to operate on the type of gas applied. This includes any conversion kits required for alternate fuels and/or high altitude.

CAUTION

TO PREVENT UNRELIABLE OPERATION OR EQUIPMENT DAMAGE, THE INLET GAS SUPPLY PRESSURE MUST BE AS SPECIFIED ON THE UNIT RATING PLATE WITH ALL OTHER HOUSEHOLD GAS FIRED APPLIANCES OPERATING.

Inlet gas supply pressures must be maintained within the ranges specified below. The supply pressure must be constant and available with all other household gas fired appliances operating. The minimum gas supply pressure must be maintained to prevent unreliable ignition. The maximum must not be exceeded to prevent unit overfiring.

INLET GAS SUPPLY PRESSURE		
Natural Gas	Minimum: 4.5" w.c.	Maximum: 10.0" w.c.
Propane Gas	Minimum: 11.0" w.c.	Maximum: 13.0" w.c.

HIGH ALTITUDE DERATE

When this furnace is installed at high altitude, the appropriate High Altitude orifice kit must be applied. This is required due to the natural reduction in the density of both the gas fuel and combustion air as altitude increases. The kit will provide the proper design certified input rate within the specified altitude range.

PRODUCT DESIGN

High altitude kits are purchased according to the installation altitude and usage of either natural or propane gas. Refer to the product Specification Sheet or Technical Manual for a tabular listing of appropriate altitude ranges and corresponding manufacturer's high altitude (Natural, Propane gas, and/or Pressure Switch) kits.

Do **not** derate the furnace by adjusting the manifold pressure to a lower pressure than specified on the furnace rating plate. The combination of the lower air density and a lower manifold pressure will prohibit the burner orifice from drawing the proper amount of air into the burner. This may cause incomplete combustion, flashback, and possible yellow tipping.

In some areas the gas supplier may artificially derate the gas in an effort to compensate for the effects of altitude. If the gas is artificially derated, the appropriate orifice size must be determined based upon the BTU/ft^3 content of the derated gas and the altitude. Refer to the National Fuel Gas Code, NFPA 54/ANSI Z223.1, and information provided by the gas supplier to determine the proper orifice size.

A different pressure switch may be required at high altitude regardless of the BTU/ft^3 content of the fuel used. Refer to the product Specification Sheet or Technical Manual for a tabular listing of appropriate altitude ranges and corresponding manufacturer's pressure switch kits.

PROPANE GAS CONVERSION

WARNING

POSSIBLE PROPERTY DAMAGE, PERSONAL INJURY OR DEATH MAY OCCUR IF THE CORRECT CONVERSION KITS ARE NOT INSTALLED. THE APPROPRIATE KITS MUST BE APPLIED TO INSURE SAFE AND PROPER FURNACE OPERATION. ALL CONVERSIONS MUST BE PERFORMED BY A QUALIFIED INSTALLER OR SERVICE AGENCY.

This unit is configured for natural gas. The appropriate manufacturer's propane gas conversion kit, must be applied for propane gas installations.

- Two-stage furnace models using a White-Rodgers 36G54 two-stage valve require an LPM-05 or LPM-06 LP conversion kit.
- Two-stage furnace models using a Honeywell VR9205 two-stage valve require an LPM-06 LP conversion kit.

Refer to the specification sheet for the model you are servicing. Refer to the "propane gas and/or High Altitude Installations" section for details.

GAS VALVE

This unit is equipped with a 24 volt gas valve controlled during furnace operation by the integrated control module. As shipped, the valve is configured for natural gas. The valve is field convertible for use with propane gas by using the appropriate propane gas conversion kit. Taps for measuring the gas supply pressure and manifold pressure are provided on the valve.

NOTE: The gas supply pressure on White-Rodger "G" model gas valve, used on single stage furnaces, can be checked with a gas pressure test kit (Part #0151K00000S) available through our authorized distributors.

The gas valve has a manual ON/OFF control located on the valve itself. This control may be set only to the "ON" or "OFF" position. Refer to the *Lighting Instructions Label* or the *"Putting the Furnace Into Operation"* section of this manual or the installation instructions for use of this control during start up and shut down periods.

GAS PIPING CONNECTIONS

CAUTION

TO AVOID POSSIBLE UNSATISFACTORY OPERATION OR EQUIPMENT DAMAGE DUE TO UNDERFIRING OF EQUIPMENT, USE THE PROPER SIZE OF NATURAL/PROPANE GAS PIPING NEEDED WHEN RUNNING PIPE FROM THE METER/TANK TO THE FURNACE.

The gas piping supplying the furnace must be properly sized based on the gas flow required, specific gravity of the gas, and length of the run. The gas line installation must comply with local codes, or in their absence, with the latest edition of the National Fuel Gas Code, NFPA 54/ANSI Z223.1.

Natural Gas Capacity of Pipe In Cubic Feet of Gas Per Hour (CFH)

Length of Pipe in Feet	Nominal Black Pipe Size				
	1/2"	3/4"	1"	1 1/4"	1 1/2"
10	132	278	520	1050	1600
20	92	190	350	730	1100
30	73	152	285	590	980
40	63	130	245	500	760
50	56	115	215	440	670
60	50	105	195	400	610
70	46	96	180	370	560
80	43	90	170	350	530
90	40	84	160	320	490
100	38	79	150	305	460

(Pressure 0.5 psig or less and pressure drop of 0.3" W.C.; Based on 0.60 Specific Gravity Gas)

$$\text{CFH} = \frac{\text{BTUH Furnace Input}}{\text{Heating Value of Gas (BTU/Cubic Foot)}}$$

To connect the furnace to the building's gas piping, the installer must supply a ground joint union, drip leg, manual shutoff valve, and line and fittings to connect to gas valve. In some cases, the installer may also need to supply a transition piece from 1/2" pipe to a larger pipe size.

The following stipulations apply when connecting gas piping. Refer to the following figures for typical gas line connections to the furnace.

1. Use black iron or steel pipe and fittings for the building piping.
2. Use pipe joint compound on male threads only. Pipe joint compound must be resistant to the action of the fuel used.
3. Use ground joint unions.

4. Install a drip leg to trap dirt and moisture before it can enter the gas valve. The drip leg must be a minimum of three inches long.
5. Install a 1/8" NPT pipe plug fitting, accessible for test gage connection, immediately upstream of the gas supply connection to the furnace.
6. Use two pipe wrenches when making connection to the gas valve to keep it from turning. The orientation of the gas valve on the manifold must be maintained as shipped from the factory.
7. Install a manual shutoff valve between the gas meter and unit within six feet of the unit. If a union is installed, the union must be downstream of the manual shutoff valve, between the shutoff valve and the furnace.
8. Tighten all joints securely.
9. Connect the furnace to the building piping by one of the following methods:
   – Rigid metallic pipe and fittings.
   – Semi-rigid metallic tubing and metallic fittings. Aluminum alloy tubing must not be used in exterior locations. In order to seal the grommet cabinet penetration, rigid pipe must be used to reach the outside of the cabinet. A semi-rigid connector to the gas piping may be used from there.
10. Use listed gas appliance connectors in accordance with their instructions. Connectors must be fully in the same room as the furnace.
11. Protect connectors and semi-rigid tubing against physical and thermal damage when installed. Ensure aluminum-alloy tubing and connectors are coated to protect against external corrosion when in contact with masonry, plaster, or insulation, or subjected to repeated wetting by liquids such as water (except rain water), detergents, or sewage.

⚠ CAUTION

EDGES OF SHEET METAL HOLES MAY BE SHARP. USE GLOVES A PRECAUTION WHEN REMOVING HOLE PLUGS.

DIRECT/STANDARD INLET PIPING

When gas piping enters *directly* to the gas valve through the *standard* inlet hole (upflow through the right side panel), the installer must supply straight pipe with a ground joint union to reach the exterior of the furnace. **NOTE:** The rigid pipe must be long enough to reach the outside of the cabinet to seal the grommet cabinet penetration on 90% furnaces. A semi-rigid connector to the gas piping can be used outside the cabinet per local codes.

INDIRECT/ALTERNATE INLET PIPING

When gas piping enters *indirectly* to the gas valve through the *alternate* gas inlet hole the installer must supply the following fittings (starting from the gas valve) to reach the outside of the cabinet (**NOTE:** On the 90% furnaces the installer must swap the alternate inlet hole plug with the standard inlet grommet in order to seal the cabinet):

- Coupling.
- 90 degree elbow.
- 2 inch close nipple.
- 90 degree elbow.
- Straight pipe, with a ground joint union, to reach the exterior of the furnace. **NOTE:** A semi-rigid connector to the gas piping can be used outside the cabinet per local codes.

GAS PIPING CHECKS

Before placing unit in operation, leak test the unit and gas connections.

⚠ WARNING

TO AVOID THE POSSIBLITY OF EXPLOSION OR FIRE, NEVER USE A MATCH OR OPEN FLAME TO TEST FOR LEAKS.

Check for leaks using an approved chloride-free soap and water solution, an electronic combustible gas detector, or other approved testing methods.

NOTE: Never exceed specified pressures for testing. Higher pressure may damage the gas valve and cause subsequent overfiring, resulting in heat exchanger failure. Disconnect this unit and shutoff valve from the gas supply piping system before pressure testing the supply piping system with pressures in excess of 1/2 psig (3.48 kPa). Isolate this unit from the gas supply piping system by closing its external manual gas shutoff valve before pressure testing supply piping system with test pressures equal to or less than 1/2 psig (3.48 kPa).

PROPANE GAS TANKS AND PIPING

⚠ WARNING

PROPANE GAS IS HEAVIER THAN AIR AND ANY LEAKING GAS CAN SETTLE IN ANY LOW AREAS OR CONFINED SPACES. TO PREVENT PROPERTY DAMAGE, PERSONAL INJURY, OR DEATH DUE TO FIRE OR EXPLOSION CAUSED BY A PROPANE GAS LEAK, INSTALL A GAS DETECTION WARNING DEVICE.

A gas detecting warning system is the only reliable way to detect a propane gas leak. Iron oxide (rust) can reduce the level of odorant in propane gas. Do not rely on your sense of smell. Contact a local propane gas supplier about installing a gas detecting warning system. If the presence of gas is suspected, follow the instructions on the following page.

PRODUCT DESIGN

All propane gas equipment must conform to the safety standards of the National Board of Fire Underwriters, NBFU Manual 58.

For satisfactory operation, propane gas pressure must be 11 inch WC at the furnace manifold with all gas appliances in operation. Maintaining proper gas pressure depends on three main factors:

1. Vaporization rate, depending on temperature of the liquid, and "wetted surface" area of the container or containers.
2. Proper pressure regulation. (Two-stage regulation is recommended for both cost and efficiency).
3. Pressure drop in lines between regulators, and between second stage regulator and the appliance. Pipe size will depend on length of pipe run and total load of all appliances.

Complete information regarding tank sizing for vaporization, recommended regulator settings, and pipe sizing is available from most regulator manufacturers and propane gas suppliers.

Always use a pipe sealant approved for natural gas and LP gas.

Refer to the following illustration for typical propane gas installations and piping.

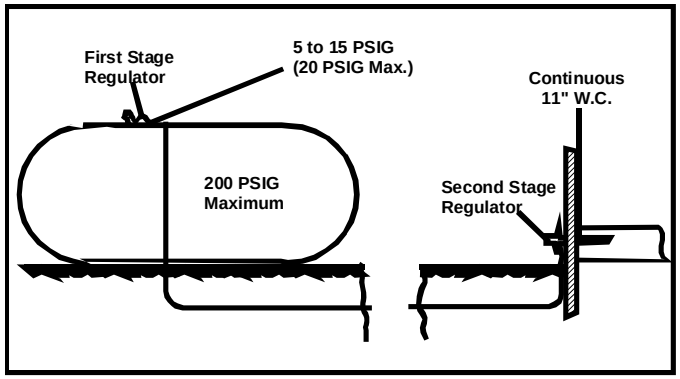

Typical Propane Gas Installation

WARNING

IF THE GAS FURNACE IS INSTALLED IN A BASEMENT, AN EXCAVATED AREA OR A CONFINED SPACE, IT IS STRONGLY RECOMMENDED TO CONTACT A PROPANE SUPPLIER TO INSTALL A GAS DETECTING WARNING DEVICE IN CASE OF A GAS LEAK.

- SINCE PROPANE GAS IS HEAVIER THAN AIR, ANY LEAKING GAS CAN SETTLE IN ANY LOW AREAS OR CONFINED SPACES.
- PROPANE GAS ODORANT MAY FADE, MAKING THE GAS UNDETECTABLE EXCEPT WITH A WARNING DEVICE.

WARNING

AN UNDETECTED GAS LEAK WILL CREATE A DANGER OF EXPLOSION OR FIRE. IF THE PRESENCE OF GAS IS SUSPECTED, FOLLOW THE INSTRUCTIONS ON THE COVER OF THIS MANUAL. FAILURE TO DO SO COULD RESULT IN **SERIOUS PERSONAL INJURY OR DEATH**.

WARNING

IF THE INFORMATION IN THESE INSTRUCTIONS IS NOT FOLLOWED EXACTLY, A FIRE OR EXPLOSION MAY RESULT CAUSING PROPERTY DAMAGE, PERSONAL INJURY OR LOSS OF LIFE.

– DO NOT STORE OR USE GASOLINE OR OTHER FLAMMABLE VAPORS AND LIQUIDS IN THE VICINITY OF THIS OR ANY OTHER APPLIANCE.

– **WHAT TO DO IF YOU SMELL GAS**:

- DO NOT TRY TO LIGHT ANY APPLIANCE.
- DO NOT TOUCH ANY ELECTRICAL SWITCH; DO NOT USE ANY PHONE IN YOUR BUILDING.
- IMMEDIATELY CALL YOUR GAS SUPPLIER FROM A NEIGHBOR'S PHONE. FOLLOW THE GAS SUPPLIER'S INSTRUCTIONS.
- IF YOU CANNOT REACH YOUR GAS SUPPLIER, CALL THE FIRE DEPARTMENT.

– INSTALLATION AND SERVICE MUST BE PERFORMED BY A QUALIFIED INSTALLER, SERVICE AGENCY OR THE GAS SUPPLIER.

Sizing Between First and Second Stage Regulator*

Maximum Propane Capacities listed are based on 2 psig pressure drop at 10 psig setting.
Capacities in 1,000 BTU/hour.

Pipe or Tubing Length Feet	Tubing Size, O.D. Type L					Nominal Pipe Size Schedule 40	
	3/8"	1/2"	5/8"	3/4"	7/8"	1/2"	3/4"
10	730	1,700	3,200	5,300	8,300	3,200	7,500
20	500	1,100	220	3,700	5,800	2,200	4,200
30	400	920	2,000	2,900	4,700	1,800	4,000
40	370	850	1,700	2,700	4,100	1,600	3,700
50	330	770	1,500	2,400	3,700	1,500	3,400
60	300	700	1,300	2,200	3,300	1,300	3,100
80	260	610	1,200	1,900	2,900	1,200	2,600
100	220	540	1,000	1,700	2,600	1,000	2,300
125	200	490	900	1,400	2,300	900	2,100
150	190	430	830	1,300	2,100	830	1,900
175	170	400	780	1,200	1,900	770	1,700
200	160	380	730	1,100	1,800	720	1,500

To convert to capacities at 15 psig settings - multiply by 1.130
To convert to capacities at 5 psig settings - multiply by 0.879

PRODUCT DESIGN

Sizing Between Second or Second Stage Regulator & Appliance*

Maximum Propane Capacities listed are based on 1/2" W.C. pressure drop at 11" W.C. setting. Capacities in 1,000 BTU/hour.

Pipe or Tubing Length Feet	Tubing Size, O.D. Type L					Nominal Pipe Size Schedule 40				
	3/8"	1/2"	5/8"	3/4"	7/8"	1/2"	3/4"	1"	1-1/4"	1-1/2"
10	39	92	199	329	501	275	567	1,071	2,205	3,307
20	26	62	131	216	346	189	393	732	1,496	2,299
30	21	50	107	181	277	152	315	590	1,212	1,858
40	19	41	90	145	233	129	267	504	1,039	1,559
50	18	37	79	131	198	114	237	448	913	1,417
60	16	35	72	1,211	187	103	217	409	834	1,275
80	13	29	62	104	155	89	185	346	724	1,066
100	11	26	55	90	138	78	162	307	630	976
125	10	24	48	81	122	69	146	275	567	866
150	9	21	43	72	109	63	132	252	511	787
200	8	19	39	66	100	54	112	209	439	665
250	8	17	36	60	93	48	100	185	390	590

*Data in accordance with NFPA pamphlet No. 54

Propane Gas Piping Charts

When installing a propane storage tank, the contractor must consider proper tank sizing, safety, efficiency, ground characteristics and aesthetics. For a residential customer, the size may range from 100-1,000 gallons, depending on household use. Typically, a 500 gallon tank is ample for an average four-bedroom home. However, it is best to consult your local propane supplier to ensure the proper sizing for propane storage requirements. Determining the correct tank size for each household is a function of demand, economy, efficiency and convenience. It is a process that requires cooperation between the propane supplier and customer.

ELECTRICAL CONNECTIONS

WARNING

TO AVOID THE RISK OF ELECTRICAL SHOCK, WIRING TO THE UNIT MUST BE PROPERLY POLARIZED AND GROUNDED.

WARNING

HIGH VOLTAGE

DISCONNECT ALL POWER BEFORE SERVICING OR INSTALLING THIS UNIT. MULTIPLE POWER SOURCES MAY BE PRESENT. FAILURE TO DO SO MAY CAUSE PROPERTY DAMAGE, PERSONAL INJURY OR DEATH.

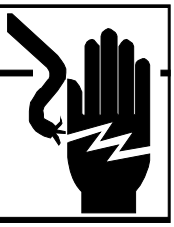

CAUTION

LABEL ALL WIRES PRIOR TO DISCONNECTION WHEN SERVICING CONTROLS. WIRING ERRORS CAN COUSE IMPROPER AND DANGEROUS OPERATION. VERIFY PROPER OPERATION AFTER SERVICING.

WIRING HARNESS

The wiring harness is an integral part of this furnace. Field alteration to comply with electrical codes should not be required. Wires are color coded for identification purposes. Refer to the wiring diagram for wire routings. If any of the original wire as supplied with the furnace must be replaced, it must be replaced with wiring material having a temperature rating of at least 105° C. Any replacement wiring must be copper conductor.

115 VOLT LINE CONNECTIONS

Before proceeding with electrical connections, ensure that the supply voltage, frequency, and phase correspond to that specified on the unit rating plate. Power supply to the furnace must be N.E.C. Class 1, and must comply with all applicable codes. The furnace must be electrically grounded in accordance with local codes or, in their absence, with the latest edition of The National Electric Code, ANSI NFPA 70 and/or The Canadian Electric Code CSA C22.1.

Use a separate fused branch electrical circuit containing properly sized wire, and fuse or circuit breaker. The fuse or circuit breaker must be sized in accordance with the maximum overcurrent protection specified on the unit rating plate. An electrical disconnect must be provided at the furnace location.

NOTE: Line polarity must be observed when making field connections.

WARNING

IN 90% FURNACE UPRIGHT UPFLOW INSTALLATIONS, THE DRAIN TRAP MUST BE MOUNTED ON THE OPPOSITE SIDE OF THE UNIT FROM THE JUNCTION BOX. THIS WILL REDUCE THE RISK OF WATER REACHING THE JUNCTION BOX IN THE EVENT OF A BLOCKED DRAIN CONDITION.

Connect hot, neutral, and ground wires as shown in the wiring diagram located on the unit's blower door. Line polarity must be observed when making field connections. Line voltage connections can be made through either the right or left side panel.

CAUTION

EDGES OF SHEET METAL HOLES MAY BE SHARP. USE GLOVES A PRECAUTION WHEN REMOVING HOLE PLUGS.

NOTE: Wire routing must not interfere with circulator blower operation, filter removal, or routine maintenance.

WARNING

TO AVOID THE RISK OF ELECTRICAL SHOCK, INJURY, OR DEATH, THE FURNACE MUST BE ELECTRICALLY GROUNDED IN ACCORDANCE WITH LOCAL CODES OR, IN THEIR ABSENCE, WITH THE LATEST EDITION OF THE NATIONAL ELECTRIC CODE.

PRODUCT DESIGN

WARNING

HIGH VOLTAGE
DISCONNECT **ALL** POWER BEFORE SERVICING OR CHANGING ANY ELECTRICAL WIRING. MULTIPLE POWER SOURCES MAY BE PRESENT. FAILURE TO DO SO MAY CAUSE PROPERTY DAMAGE, PERSONAL INJURY OR DEATH.

Some furnaces have an integrated ignition control that is equipped with line voltage accessory terminals for controlling power to an optional field-supplied humidifier and/or electronic air cleaner.

Accessory Load Specifications	
Electronic Air Cleaner	1.0 Amp maximum at 120 VAC

Turn OFF power to the furnace before installing any accessories. Follow the humidifier or air cleaner manufacturers' instructions for locating, mounting, grounding, and controlling these accessories.

24 VOLT HUMIDIFIER

The yellow wire connected to the I.D. Blower pressure switch is powered anytime the pressure switch is closed and provides 24 VAC humidifier control. Remove the yellow wire and connect the supplied brown jumper wire to the pressure switch terminal. Reconnect the yellow wire to the "piggyback" terminal on the brown jumper and then connect the 24 VAC line of the humidifier to the stripped end of the brown wire. Using a wire nut or a field-supplied quick connect terminal can make this connection. The wiring must conform to all local and national codes. Connect the COM side of the humidifier to the B/C terminal on the furnace control board (or to the COM side of the 24 VAC transformer). **DO NOT CONNECT 115V HUMIDIFIER TO THESE TERMINALS.**

If it is necessary for the installer to supply additional line voltage wiring to the inside of the furnace, the wiring must conform to all local codes, and have a minimum temperature rating of 105°C. All line voltage wire splices must be made inside the furnace junction box.

The integrated control module humidifier terminals (HUM) are energized with 115 volts whenever the induced draft blower is energized. The integrated control module electronic air cleaner terminals (EAC) are energized with 115 volts whenever the circulator blower is energized.

24 VOLT THERMOSTAT WIRING

NOTE: Low voltage connections can be made through either the right or left side panel. Wire routing must not interfere with circulator blower operation, filter removal, or routine maintenance.

A 40 V.A. transformer and an integrated electronic control are built into the furnace to allow use with most cooling equipment. Consult the wiring diagram, located in the Technical Manual or on the blower door for further details of 115 Volt and 24 Volt wiring.

THERMOSTAT WIRING - "H" MODEL

The DM80HS/DD80HS furnace will have a "W" terminal and will use a single stage thermostat. The following drawing illustrates the typical field wiring for a heat only single stage system and a single stage heating/single stage cooling system. Refer to the following figures for proper connections to the integrated control module.

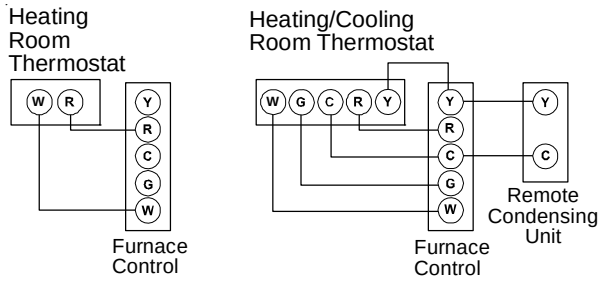

Typical Field Wiring (24 VAC Control Circuit)

CONTINUOUS FAN OPERATION "H" MODEL

The DM80HS/DD80HS furnace control will energize the **low heat** circulator fan speed when the fan switch on the thermostat is turned to the "ON" position.

CIRCULATOR BLOWER SPEED ADJUSTMENT

WARNING

HIGH VOLTAGE
DISCONNECT **ALL** POWER BEFOR CHANGING SPEED TAPS. MULTIPLE POWER SOURCES MAY BE PRESENT. FAILURE TO DO SO MAY CAUSE PROPERTY DAMAGE, PERSONAL INJURY OR DEATH.

Connect the correct motor leads to the COOL, HIGH HEAT, LOW HEAT, and PARK terminals. If the heating speed equals cooling speed, use the jumper wire provided. All unused motor leads that are not connected to "PARK" terminals on the control must be taped to prevent shorts.

CIRCULATING AIR AND FILTERS

DUCTWORK - AIR FLOW

Duct systems and register sizes must be properly designed for the C.F.M. and external static pressure rating of the furnace. Ductwork should be designed in accordance with the recommended methods of "Air Conditioning Contractors of America" manual D.

A duct system should be installed in accordance with Standards of the National Board of Fire Underwriters for the Installation of Air Conditioning, Warm Air Heating and Ventilating Systems, Pamphlets No. 90A and 90B.

A return air filter is not supplied with the furnace. The installer must supply a means of filtering all of the return air. Filter(s) shall comply with UL900 or CAN/ULC-S111 Standards. If the furnace is installed without filters, the warranty will be voided.

PRODUCT DESIGN

MINIMUM FILTER SIZES for DISPOSABLE FILTERS

FURNACE INPUT	FILTER SIZE
40M	320 in^2
60M	483 in^2
80M	640 in^2
100M	800 in^2
120M	738 in^2
140M	738 in^2

DISPOSABLE NOMINAL 300 F.M. FACE VELOCITY

SIDE RETURN		
Cabinet Width (In.)	Nominal Filter Size (In.)	Approx. Flow Area (In.)
All	16x25x1	400

BOTTOM RETURN		
Cabinet Width (In.)	Nominal Filter Size (In.)	Approx. Flow Area (In.)
14"	14X25X1	350
17-1/2	14X25X1	350
21	16x25x1	400
24-1/2	20X25X1	500

Refer to Minimum Filter Area tables to determine filter area requirement. **NOTE:** Filters can also be installed elsewhere in the duct system such as a central return.

One inch throwaway filters should be sized for a face velocity of 300 feet per minute or less (14x25x1 throwaway = 730 CFM maximum, 16x25x1 throwaway = 830 CFM maximum, 18x25x1 throwaway = 940 CFM maximum, 20x25x1 throwaway = 1040 CFM maximum) All other filters should be sized according to their manufacturer's instructions.

To find the miminum filter requirement (in^2) for either permanent or disposable filters divide the required airflow (CFM) by the rated velocity of the filter, either 300ft/min for disposable filter or 600ft/min for permanent filter. Multiply the number by 144 $in.^2$ to obtain the minimum filter requirement (in^2).

EXAMPLE:

$$\text{Filter Size } (in^2) = \frac{1400 \text{ CFM} \times 144 \text{ in}^2}{600 \text{ ft./min. (Permanent)}}$$

$$\text{Filter Size } (in^2) = \frac{1400 \text{ CFM} \times 144 \text{ in}^2}{300 \text{ (Disposable) ft./min.}}$$

Filter Size = 672in^2 Disposable

Filter Size = 336in^2 Permanent

Upflow furnaces with air delivery of less than 1800 CFM:

Use one side return or one bottom return ductwork connection.

Upflow furnaces with air delivery of 1800 CFM or higher:

Use two side returns or one side return and one bottom return connection.

Guide dimples locate the side and bottom return cutout locations. Use a straight edge to scribe lines connecting the dimples. Cut out the opening on these lines. An undersized opening will cause reduced airflow. For bottom return connection, remove the bottom of the cabinet before setting the furnace on the raised platform or return air duct.

A closed return duct system must be used, with the return duct connected to the furnace. ***NOTE:*** *Ductwork must never be attached to the back of the furnace.* Supply and return connections to the furnace may be made with flexible joints to reduce noise transmission, if desired. If a central return is used, a connecting duct must be installed between the unit and the utility room wall so the blower will not interfere with combustion air or draft. The room, closet, or alcove must not be used as a return air chamber.

When the furnace is used in connection with a cooling unit, the furnace should be installed in parallel with or on the upstream side of the cooling unit to avoid condensation in the heating element. With a parallel flow arrangement, the dampers or other means used to control the flow of air must be adequate to prevent chilled air from entering the furnace and, if manually operated, must be equipped with means to prevent operation of either unit unless the damper is in the full heat or cool position.

When the furnace is heating, the temperature of the return air entering the furnace must be between **55°F** and **100°F**.

UPRIGHT FILTER INSTALLATIONS

Depending on the installation and/or customer preference, differing filter arrangements can be applied. Filters can be installed in the central return register and a side panel external filter rack kit (upflow filter kit # EFR01). As an alternative a media air filter or electronic air cleaner can be used as the requested filter. Refer to the following minimum filter requirement charts for determination of the minimum filter area to ensure proper unit performance. The following figures show possible filter locations. **NOTE:** A ductwork access door must be used in counterflow applications to allow filter removal. If the filter rack is used, the side of the plenum must be at least as tall as dimension "A" shown in the following illustration. For dimension of "A" refer to the following chart.

COUNTERFLOW FILTER INSTALLATION

This furnace has provisions for the installation of return air filters at the counterflow top return. The furnace will accommodate the following filter sizes depending on cabinet size:

PRODUCT DESIGN

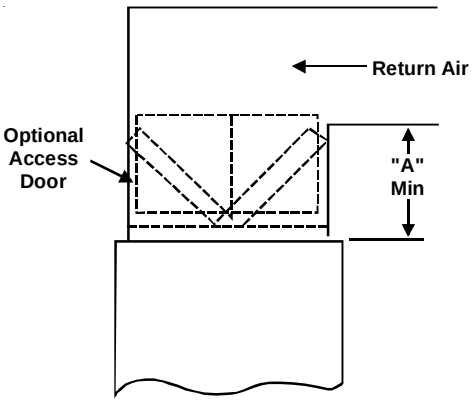

COUNTERFLOW TOP RETURN				
Cabinet Width	Filter Area (in^2)	Qty.	Filter Size (in)	Dimension "A: (in)
14	600	2	15x20x1	15.1
17 1/2				14.2
21				13.0
24 1/2				11.3
14	800	2	20x20x1	20.4
17 1/2				19.7
21				18.8
24 1/2				17.7
14	1000	2	25x20x1	25.5
17 1/2				25.0
21				24.3
24 1/2				23.4

Refer to Minimum Filter Area tables to determine filter area requirement. **NOTE:** Filters can also be installed elsewhere in the duct system such as a central return.

Horizontal Installations
Filter(s) must be installed external to the furnace casing for horizontal installations. For most installations it is preferable to use a central return with filters installed in the duct behind the return air grill. In this way filter replacement is relatively simple by merely removing the grille, rather than going into the attic or crawl space.

ADDITIONAL FILTERING ACCESSORIES

External Filter Rack Kit (EFR01)
The external filter rack kit is intended to provide a location external to the furnace casing, for installation of a permanent filter on upflow model furnaces. The rack is designed to mount over the indoor blower compartment area of either side panel, and provide filter retention as well as a location for attaching return air ductwork.

NORMAL SEQUENCE OF OPERATION

POWER UP

1. 115 VAC power applied to furnace.
2. Integrated ignition control module performs internal checks.
3. Integrated ignition control module LED will light.
4. Integrated ignition control monitors safety circuits continuously.
5. Furnace awaits call from thermostat.

HEATING MODE

(MODE DIP SWITCH IS SET TO "1 STG" POSITION)
The normal operational sequence in heating mode is as follows:

- R and W thermostat contacts close, initiating a call for heat.
- Integrated control module performs safety circuit checks.
- Induced draft blower is energized for 15 second prepurge period causing pressure switch contacts to close.
- Igniter warm up begins after 15 second prepurge expires.
- Low and high stage gas valves open at end of igniter warm up period, delivering gas to burners and establishing flame.
- Integrated control module monitors flame presence. Gas valve will remain open only if flame is detected.
- Circulator blower is energized on high heat speed following a fixed thirty second blower on delay. Electronic air cleaner terminals are energized with circulator blower.
- Furnace operates; integrated control module monitors safety circuits continuously.
- R and W thermostat contacts open, completing the call for heat.
- Gas valve closes, extinguishing flame.
- Induced draft blower is de-energized following a fifteen second post purge.
- The circulator blower will then run in high heat speed for the blower off delay period, (either 100 or 150 seconds)

(MODE DIP SWITCH IS SET TO "2 STG" POSITION)
The normal operational sequence in sequence is as follows:

- R and W thermostat contacts close, initiating a call for heat.
- Integrated control module performs safety circuit checks.
- Induced draft blower is energized for 15 second prepurge period causing pressure switch contacts to close.
- Igniter warm up begins after 15 second prepurge expires.
- Low and high-stage gas valves open at end of igniter warm up period, delivering gas to burners and establishing flame.

- High-stage gas valve closes after five seconds; low-stage gas valve remains open.
- Integrated control module monitors flame presence. Gas valve will remain open only if flame is detected.
- Circulator blower is energized on low heat speed following a fixed thirty second blower on delay. Electronic air cleaner terminals are energized with circulator blower.
- Furnace is now operating in low-stage heating mode.
- Furnace operates; integrated control module monitors safety circuits continuously.
- If low-stage delay period expires, control will shift operation from low-stage heating mode operation to high-stage heating mode operation. Control will energize circulator blower high heat speed and high stage gas valve.
- Furnace is now operating in high-stage heating mode.
- R and W thermostat contacts open, completing the call for heat.
- Induced draft blower is de-energized following a fifteen second post purge.
- Circulator blower is de-energized following a heat off delay period (selectable 100 or 150 seconds; factory set at 150 seconds).

  The circulator blower will continue to run at current heat speed for the duration of the cool down period.
- Furnace awaits the next call from thermostat.

Cooling Mode

The normal operational sequence in cooling mode is as follows:

- R and Y thermostat contacts close, initiating a call for cool.
- Integrated control module performs safety circuit checks.
- Outdoor fan and compressor are energized.
- Circulator blower is energized on cool speed following a fixed five second on delay. Electronic air cleaner terminals are energized with circulator blower.
- Furnace circulator blower and outdoor cooling unit run, integrated control module monitors safety circuits continuously.
- R and Y thermostat contact open, completing the call for cool.
- Outdoor fan and compressor are de-energized.
- Circulator blower is de-energized following a fixed forty five second cool off delay period. Electronic air cleaner terminals are de-energized.
- Furnace awaits the next call from thermostat.

Fan Only Mode

The normal operational sequence in fan only mode is as follows:

- R and G thermostat contacts close, initiating a call for fan.
- Integrated control module performs safety circuit checks.
- Circulator blower is energized on low heat speed. Electronic air cleaner terminals are energized.
- Circulator blower runs, integrated control module monitors safety circuits continuously.
- R and G thermostat contacts open, completing the call for fan.
- Circulator blower is de-energized. Electronic air cleaner terminals are de-energized.
- Furnace awaits the next call from thermostat.

PRODUCT DESIGN
TwinComfort™ Configuration & Operation

TwinComfort™

This furnace is capable of the following heating modes:

- Single Stage (Factory Setting)
- Modified Two-Stage
  - > Fixed 5-Min. Low Stage
  - > Auto Time (1-12 Min.) Low Stage

To change from the factor single-stage operation, adjust the dipswitches on the ignition control as follows:

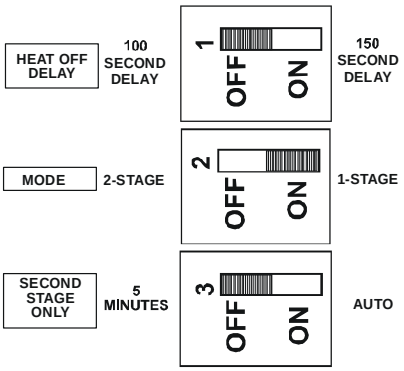

* Switches for White-Rodgers board shown above
With other venders, order of switches may vary
but functionality stays the same.

Note: This furnace is designed to be used
with a single-stage thermostat.

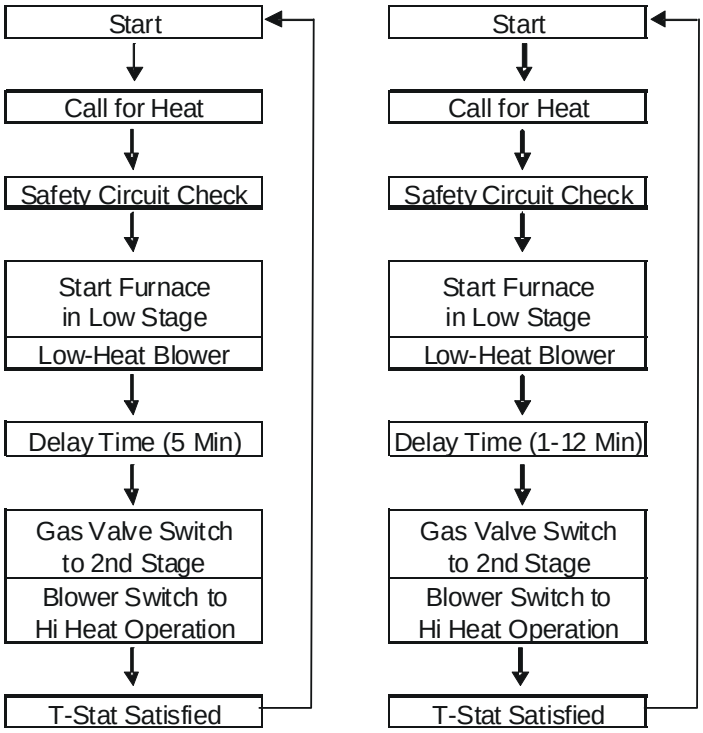

SYSTEM OPERATION

HEATING - Abnormal Operation

The following presents the probable causes of questionable furnace operation and how to fix them. Look through the observation window in the blower access door and make a note of the number of flashes in sequence between pauses. Next, refer to the *Troubleshooting Chart* on the following pages for an interpretation of the LED signals and to the information in this section for a description of the problem.

1. **Internal Control Failure with Integrated Ignition Control.** Check for voltage to the furnace . Check for blown fuse on the control board. If the control determines it has an internal fault, it enters a locked-out state. Any of the situations mentioned will cause the diagnostic LED to provide **no signal.** The control board should only be replaced after all other checks from the *Troubleshooting Chart* have been verified.
2. **System Lockout.** If a flame is not sensed during the first seven (4) seconds after the gas valve is energized, the control turns off the gas. There will then be a 30 second delay while the induced draft blower is energized to purge the heat exchanger. The ignitor will next be energized and preheated for (17) seconds. The gas valve will then be energized. If flame is not sensed in seven (4) seconds the gas valve will be de-energized and another purge will occur. The control will cycle the gas valve a total of three (3) times before it determines it cannot establish measurable combustion and enters a locked out state. The diagnostic light code for this problem is **one short flash** followed by a longer pause. The control can be reset and brought out of lockout mode by turning the thermostat off for more than (5) seconds and less than (20) seconds and then back on. It can also be reset by turning off the electrical disconnect switch to the furnace for a minimum of 5 seconds.

NOTE: The control board will automatically reset one hour after lockout occurs. If the furnace frequently has to be reset, it means that a problem exists that should be corrected. Refer to *Troubleshooting Chart* on the following pages for aid in determining the cause.

3. **Pressure Switch Stuck Closed.** If the control senses the pressure switch is closed when the induced draft blower is off, it waits until the fault is corrected. The diagnostic light code for this problem is **two short flashes** followed by a longer pause. The probable cause is either a faulty pressure switch or wiring.
4. **Pressure Switch Stuck Open.** If, after the induced draft blower is energized, the pressure switch does not close within 5 minutes, the control will go into a 1-hour lockout. The control will automatically reset from lockout adn restart the ignition sequence. The diagnostic light code for this problem is **three short flashes** followed by a pause. The probable causes are either disconnected hose to the pressure switch, faulty pressure switch or wiring, or restricted air intake or flue piping.
5. **Open Primary or Auxiliary Limit.** If the limit control opens, the air circulator blower will be turned on until the limit closes. The induced draft blower will turn off for 5 seconds then turn off. The diagnostic light code for this problem is **four short flashes** followed by a pause. The probable cause is either low conditioned air flow due to dirty filter or resistance in duct work, faulty limit, faulty blower, or blower speed set to low.
6. **Flame Sensed with No Call for Heat.** If the control senses a flame when the gas valve is de-energized, it will run the air circulation blower and the induced draft blower continuously with no further furnace operation. The diagnostic flash code for this is a **five flashes**. The probable causes are either a short to ground in flame sense circuit, miswiring, lingering burner flame or a slow closing gas valve.
7. **Open Rollout Limit.** If the rollout control opens, the air circulator blower will be energized all the time. The diagnostic light code for this problem is **six flashes** followed by a pause. The probable cause is either restricted flue piping or improper air requirements. An open fuse will also cause this fault code.
8. **Low Flame Sense Signal.** If the furnace continues to operate and the micro-amp signal from the flame sensor falls below specified level, the diagnostic light code for this problem will be **seven flashes** followed by a pause. The probable cause is either a coated/oxidized sensor, incorrectly positioned senser in burner flame or lazy burner flame due to improper gas pressure or combustion air.
9. **Igniter circuit or poor ground.** Improperly connected igniter, bad igniter or poor ground to the equipment. The diagnostic light code for this problem is **eight flashes**.

TROUBLESHOOTING CHART

Symptoms of Abnormal Operation	Associated LED Code[2]	Fault Description(s)	Possible Causes	Corrective Action	Cautions and Notes
• Furnace fails to operate. • Integrated control module diagnostic **LED** provides **no signal**.	NONE	• No 115 volt power to furnace, or no 24 volt power to integrated control module. • Blown fuse or circuit breaker. • Integrated control module has an internal fault.	• Manual disconnect switch OFF, door switch open, or 24 volt wires improperly connected or loose. • Blown fuse or circuit breaker. • Integrated control module has an internal fault.	• Assure 115 and 24 volt power to furnace integrated control module. • Check integrated control module fuse (3A). Replace if necessary. • Check for possible shorts in 115 and 24 volt circuits. Repair as necessary. • Replace bad integrated control module.	• Turn power OFF prior to repair. • Replace integrated control module fuse with 3A automotive fuse. • Read precautions in "Electrostatic Discharge" section of manual.
• LED is Steady On.	ON CONTINUOUS ON	• Normal Operation	•Normal Operation	• None	•Normal Operation
• Furnace fails to operate. • Integrated control module diagnostic **LED** is flashing **ONE** (1) flash.	1	• Furnace lockout due to an excessive number of ignition "retries" (3 total)[1].	• Failure to establish flame. Cause may be no gas to burners, front cover pressure switch stuck open, bad igniter or igniter alignment, improper orifices, or coated/oxidized or improperly connected flame sensor. • Loss of flame after establishment. Cause may be interrupted gas supply, lazy burner flames (improper gas pressure or restriction in flue and/or combustion air piping), front cover pressure switch opening, or improper induced draft blower performance.	• Locate and correct gas interruption. • Check front cover pressure switch operation (hose, wiring, contact operation). Correct if necessary. • Replace or realign igniter. • Check flame sense signal. Sand sensor if coated and/or oxidized. • Check flue piping for blockage, proper length, elbows, and termination. • Verify proper induced draft blower performance.	• Turn power OFF prior to repair. • Igniter is fragile, handle with care. • Sand flame sensor with emery cloth. • See "Vent/ Flue Pipe" section for piping details.
• Furnace fails to operate. • Integrated control module diagnostic **LED** is flashing **TWO** (2) flashes.	2	• Pressure switch circuit is closed. • Induced draft blower **is not** operating.	• Induced draft blower pressure switch contacts sticking. • Shorts in pressure switch circuit.	• Replace induced draft blower pressure switch. • Repair short.	• Turn power OFF prior to repair. • Replace pressure switch with proper replacement part.
• Induced draft blower runs continuously with no further furnace operation. • Integrated control module diagnostic **LED** is flashing **THREE** (3) flashes.	3	• Pressure switch circuit not closed. • Induced draft blower **is** operating.	• Pressure switch hose blocked, pinched or connected improperly. • Blocked flue and/or inlet air pipe, blocked drain system, or weak induced draft blower. • Incorrect pressure switch setpoint or malfunctioning switch contacts. • Loose or improperly connected wiring.	• Inspect pressure switch hose. Repair, if necessary, • Inspect flue and/or inlet air piping for blockage, proper length, elbows, and termination. Check drain system. Correct as necessary. • Correct pressure switch setpoint or contact motion. • Tighten or correct wiring connection.	• Turn power OFF prior to repair. • Replace pressure switch with proper replacement part.

[1]Integrated control module will automatically attempt to reset from lockout after one hour.

[2]LED Flash code will cease if power to the control module is interrupted through the disconnect or door switch.

TROUBLESHOOTING CHART

Symptoms of Abnormal Operation	Associated LED Code[2]	Fault Description(s)	Possible Causes	Corrective Action	Cautions & Notes
• Circulator blower runs continuously. No furnace operation. • Integrated control module diagnostic **LED** is flashing **FOUR** (4) flashes.	4	• Primary limit circuit is open.	• Insufficient conditioned air over the heat exchanger. Blocked filters, restrictive ductwork, improper circulator blower speed, or failed circulator blower. • Faulty primary limit switch. • Loose or improperly connected wiring.	• Check primary limit. Replace if necessary. • Check filters and ductwork for blockage. Clean filters or remove obstruction. • Check circulator blower speed and performance. Correct speed or replace blower if necessary. • Tighten or correct wiring connection.	• Turn power OFF prior to repair. • Replace primary switch with proper replace-ment part. • Replace blower with correct replacement part.
• Induced draft blower and circulator blower runs continuously. No furnace operation. • Integrated control module diagnostic **LED** is flashing **FIVE** (5) flashes.	5	• Flame sensed with no call for heat.	• Short to ground in flame sense circuit.	• Correct short at flame sensor or in flame sensor wiring.	• Turn power OFF prior to repair.
• Furnace fails to operate. • Integrated control module diagnostic **LED** is flashing **SIX** (6) flashes. • No furnace operation.	6	• Rollout limit open. • Integrated control module fuse is blown.	• Flame rollout. • Misaligned burners, blocked flue and/or air inlet pipe, or failed induced draft blower. • Loose or improperly connected wiring. • Short in 24 volt AC control circuits or safety circuits. •Faulty rollout limit.	• Check burners for proper alignment. • Check flue and air inlet piping for blockage, proper length, elbows, and termination. Correct as necessary. • Check rollout limit. Replace if necessary. • Check induced draft blower for proper performance. Replace, if necessary. • Tighten or correct wiring connection. • Repair short in 24 volt AC control/safety circuit(s). • Replace integrated control module fuse (3A).	• See "Vent/Flue Pipe" section for piping details. • Replace induced draft blower with proper replacement part. • Replace integrated control module fuse with 3A automotive fuse. • Read precautions in "Electrostatic Discharge" section of manual. • Replace rollout limit with correct replacement part.
• Normal furnace operation. • Integrated control module diagnostic **LED** is flashing **SEVEN** (7) flashes.	7	• Flame sense microamp signal is low.	• Flame sensor is coated/oxidized. • Flame sensor incorrectly positioned in burner flame. • Lazy burner flame due to improper gas pressure or combustion air.	• Sand flame sensor. • Inspect for proper sensor alignment. • Compare current gas pressure to rating plate info. Adjust as needed.	• Turn power OFF prior to repair. • Clean flame sensor with steel wool. • See "Vent/Flue Pipe" section for piping details. • See rating plate for proper gas pressure.
• Furnace not operat-ing. • Integrated control module diagnostic **LED** is flashing **EIGHT** (8) flashes.	8	• Problem with igniter circuit.	• Improperly connected igniter. • Bad igniter. • Poor unit ground. • Poor burner ground. • Faulty integrated control module.	• Check and correct wiring from integrated control module to igniter. •Replace bad igniter. •Check and correct unit ground wiring. • Replace bad integrated control module.	• Turn power OFF prior to repair. • Replace igniter with proper replacement part. • Read precautions in "Electrostatic Discharge" section of manual.
• Induced draft blower runs continuously. No furnace operation. • Integrated control module diagnostic **LED** is flashing **continuously.**	C CONTINUOUS FLASHING	• Polarity of 115 or 24 volt power is reversed.	• Polarity of 115 volt AC power to furnace or integrated control module is reversed. • Red and blue wires to transformer are reversed. • Poor unit ground.	• Review wiring diagram to correct polarity. • Verify proper ground. Correct if necessary. • Reverse red and blue wires connected to transformer.	• Turn power OFF prior to repair.
• LED is steady on	STEADY ON	• Normal operation.			

[2] LED Flash code will cease if power to the control module is interrupted through the disconnect or door switch.

POLARIZATION AND PHASING

As more and more electronic's are introduced to the Heating Trade, Polarization of incoming power and phasing of primary to secondary voltage on transformers becomes more important.

Polarization has been apparent in the Appliance industry since the introduction of the three prong plug, however, the Heating Industry does not use a plug for incoming power, but is hard wired.

Some of the electronic boards being used today, with flame rectification, will not function properly and/or at all without polarization of incoming power. Some also require phasing between the primary and secondary sides of step-down transformers.

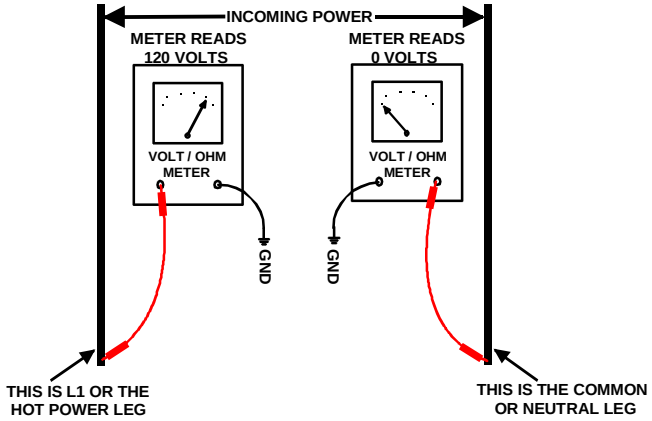

These then should be wired to the furnace accordingly.

CHECKING FOR PHASING - PRIMARY TO SECONDARY OF UNMARKED TRANSFORMERS*

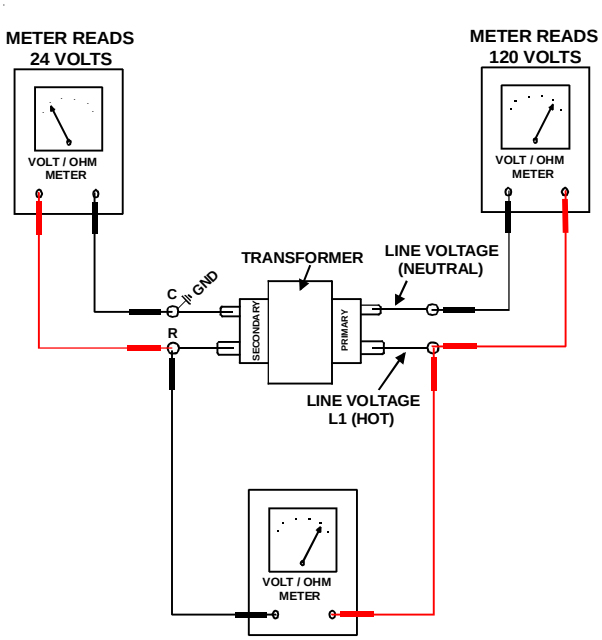

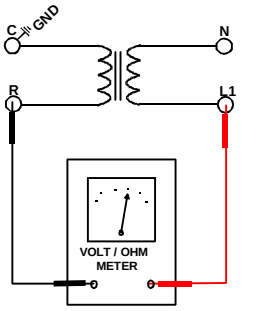

READS 96 VOLTS - IN PHASE

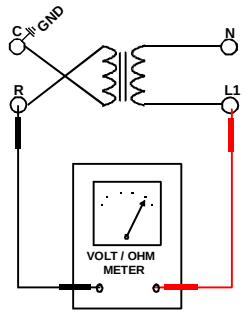

READS 144 VOLTS - OUT OF PHASE

If meter reads approximately 96 volts - the primary to secondary are in phase - if reads approximately 144 volts out of phase - reverse low voltage wires.

***NOTE:** For flame rectification the common side of the secondary voltage (24 V) is cabinet grounded. If you were to bench test a transformer the primary neutral and secondary common must be connected together for testing purposes.

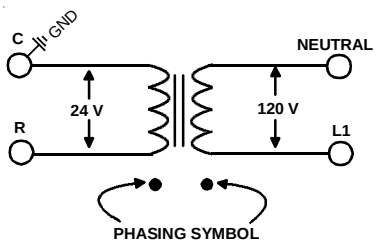

Some transformers will display phasing symbols as shown in the illustration to the left to assist in determining proper transformer phasing.

Checking for polarization and phasing should become a habit in servicing. Let's start now.

NOTE: Newer integrated ignition controls have a diagnostic flash code for reversed polarity (Refer to *Troubleshooting-Diagnostic Chart* for LED Codes).

MAINTENANCE

WARNING

HIGH VOLTAGE
DISCONNECT ALL POWER BEFORE SERVICING OR INSTALLING THIS UNIT. MULTIPLE POWER SOURCES MAY BE PRESENT. FAILURE TO DO SO MAY CAUSE PROPERTY DAMAGE, PERSONAL INJURY OR DEATH.

CAUTION

IF YOU MUST HANDLE THE ITNITOR, HANDLE WITH CARE. TOUCHING THE IGNITOR BODY WITH BARE FINGERS, ROUGH HANDLING, OR VIBRATION COULD RESULT IN EARLY IGNITOR FAILURE. ONLY A QUALIFIED SERVICER SHOULD EVER HANDLE THE IGNITOR.

ANNUAL INSPECTION

The furnace should be inspected by a qualified installer, or service agency at least once per year. This check should be performed at the beginning of the heating season. This will ensure that all furnace components are in proper working order and that the heating system functions appropriately. Pay particular attention to the following items. Repair or service as necessary.

- Flue pipe system. Check for blockage and/or leakage. Check the outside termination and the connections at and internal to the furnace.
- Combustion air intake pipe system (where applicable). Check for blockage and/or leakage. Check the outside termination and the connection at the furnace.
- Heat exchanger. Check for corrosion and/or buildup within the heat exchanger passageways.
- Burners. Check for proper ignition, burner flame, and flame sense.
- Wiring. Check electrical connections for tightness and/or corrosion. Check wires for damage.
- Filters.

AIR FILTER

WARNING

NEVER OPERATE FURNACE WIHTOUT A FILTER INSTALLED AS DUST AND LINT WILL BUILD UP ON INTERNAL PARTS RESULTING IN LOSS OF EFFICIENCY, EQUIPMENT DAMAMGE, AND POSSIBLE FIRE.

Filters must be used with this furnace. Filters do not ship with these furnaces but must be provided by the installer for proper furnace operation.

Remember that dirty filters are the most common cause of inadequate heating or cooling performance.

WARNING

HIGH VOLTAGE
DISCONNECT ALL POWER BEFORE SERVICING, REMOVING THE FILTER OR PREFORING ANY OTHER MAINTENEACE. MULTIPLE POWER SOURCES MAY BE PRESENT. FAILURE TO DO SO MAY CAUSE PROPERTY DAMAGE, PERSONAL INJURY OR DEATH.

Maintenance

Improper filter maintenance is the most common cause of inadequate heating or cooling performance. Filters should be cleaned (permanent) or replaced (disposable) every two months or as required. It is the owner's responsibility to keep air filters clean. When replacing a filter, it must be replaced with a filter of the same type and size.

Filter Removal

Depending on the installation, differing filter arrangements can be applied. Filters can be installed in the central return register, the bottom of the blower compartment (upflow only), a side panel external filter rack kit (upflow only), or the ductwork above a counterflow furnace. A media air filter or electronic air cleaner can be used as an alternate filter. The filter sizes given in the *Product Design* section of this manual or the product *Specification Sheet* must be followed to ensure proper unit performance. Refer to the following information for removal and installation of filters.

FILTER REMOVAL PROCEDURE

Media Air Filter or Electronic Air Cleaner Removal

Follow the manufacturer's directions for service.

Upright Counterflow Filter Removal

To remove filters from the ductwork above an upright counterflow installation:

1. Turn off electrical power to furnace.
2. Remove access door in ductwork above furnace.
3. Remove filters.
4. Remove blower compartment door. Vacuum compartment. Replace blower compartment door.
5. Replace filters opposite of removal.
6. Replace access door in ductwork.

Horizontal Unit Filter Removal

Filters in horizontal installations are located in the central return register.

INDUCED DRAFT AND CIRCULATION BLOWERS

The bearings in the induced draft blower and circulator blower motors are permanently lubricated by the manufacturer. No further lubrication is required. Check motor windings for accumulation of dust which may cause overheating. Clean as necessary.

MAINTENANCE

FLAME SENSOR (QUALIFIED SERVICER ONLY)

Under some conditions, the fuel or air supply can create a nearly invisible coating on the flame sensor. This coating acts as an insulator, causing a drop in the flame sensing signal. If this occurs, a qualified servicer must carefully clean the flame sensor with steel wool. After cleaning, the flame sensor output should be as listed on the specification sheet.

BURNERS

WARNING

HIGH VOLTAGE

ELECTRICAL COMPONENTS ARE CONTAINED IN BOTH COMPARTMENTS. TO AVOID ELECTRICAL SHOCK, INJURY OR DEATH, DO NOT REMOVE ANY INTERNAL COMPARTMENT COVERS OR ATTEMPT ANY ADJUSTMENT. CONTACT A QUALIFIED SERVICE AGENT AT ONCE IF AN ABNORMAL FLAME APPEARANCE SHOULD DEVELOP.

Periodically during the heating season make a visual check of the burner flames. Turn the furnace on at the thermostat. Wait a few minutes since any dislodged dust will alter the normal flame appearance. Flames should be stable, quiet, soft and blue with slightly orange tips. They should not be yellow. They should extend directly outward from the burner ports without curling downward, floating or lifting off the ports.

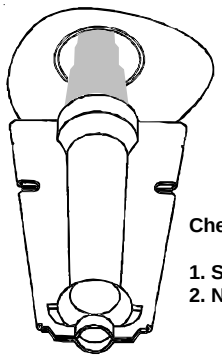

Check the burner flames for:

1. Stable, soft and blue
2. Not curling, floating, or lifting off.

Burner Flame

TEST EQUIPMENT

Proper test equipment for accurate diagnosis is as essential as regular hand tools.

The following is a must for every service technician and service shop.

1. Dial type thermometers or thermocouple meter (optional) - to measure dry bulb temperature.
2. Amprobe - to measure amperage and voltage.
3. Volt-Ohm Meter - testing continuity, capacitors, and motor windings.
4. Inclined Manometer - to measure static pressure, pressure drop across coils, filters, and draft.
5. Water Manometer (12") - to test gas inlet and manifold pressure.

Other recording type instruments can be essential in solving abnormal problems, however, in many instances they may be rented from local sources.

Proper equipment promotes faster, more efficient service and accurate repairs resulting in fewer call backs.

HEATING PERFORMANCE TEST

Before attempting to diagnose an operating fault, run a heating performance test and apply the results to the *Service Problem Analysis Guide.*

To conduct a heating performance test, the BTU input to the furnace must be calculated.

After the heating cycle has been in operation for at least fifteen minutes and with all other gas appliances turned off, the gas meter should be clocked.

To find the BTU input, multiply the number of cubic feet of gas consumed per hour by the heating value of the gas being used. (The calorific value of the gas being used is found by contacting your local utility.)

EXAMPLE: It is found by the gas meter, that it takes forty (40) seconds for the hand on the cubic foot dial to make one complete revolution, with all appliances off, except the furnace. Take this information and locate it on the gas rate chart. Observe the forty (40) seconds, locate and read across to the one (1) cubic foot dial column. There we find the number 90, which shows that ninety (90) cubic feet of gas will be consumed in one (1) hour.

Let's assume the local gas utility has stated that the calorific value of the gas is 1,025 BTU per cubic foot.

Multiplying the ninety (90) cubic feet by 1,025 BTU per cubic foot gives us an input of 92,250 BTUH.

Checking the BTU input on the rating plate of the furnace being tested.

EXAMPLE:

INPUT: 92,000 BTU/HR

OUTPUT CAP: 84,000

Should the figure you calculated not fall within five (5) percent of the nameplate rating of the unit, adjust the gas valve pressure regulator or resize orifices.

CAUTION

ALWAYS CONNECT A MONOMETER TO THE OUTLET TAP AT THE GAS VALVE BEFORE ADJUSTING THE PRESSURE REGULATOR. IN NO CASE SHOULD THE FINAL MANIFOLD PRESSURE VARY MORE THAN PLUS OR MINUS .3 INCHES WATER COLUMN FROM 3.5 INCHES WATER COLUMN FOR NATURAL GAS OR 10 INCHES WATER COLUMN FOR PROPANE GAS.

To adjust the pressure regulator on the gas valve, turn down (clockwise) to increase pressure and input, and out (counterclockwise) to decrease pressure and input.

MAINTENANCE

Since normally propane gas is not installed with a gas meter, clocking will be virtually impossible. The gas orifices used with propane are calculated for 2500 BTU per cubic foot gas and with proper inlet pressures and correct piping size, full capacity will be obtained.

With propane gas, no unit gas valve regulator is used; however, the second stage supply line pressure regulator should be adjusted to give 11" water column with all other gas consuming appliances running.

The dissipation of the heat transferred to the heat exchanger is now controlled by the amount of air circulated over its surface.

The amount (CFM) of air circulated is governed by the external static pressure in inches of water column of duct work, cooling coil, registers, etc., applied externally to the unit versus the motor speed tap (direct drive).

A properly operating unit must have the BTU per hour input and CFM of air, within the limits shown to prevent short cycling of the equipment. As the external static pressure goes up, the temperature rise will also increase. Consult the proper tables for temperature rise limitation.

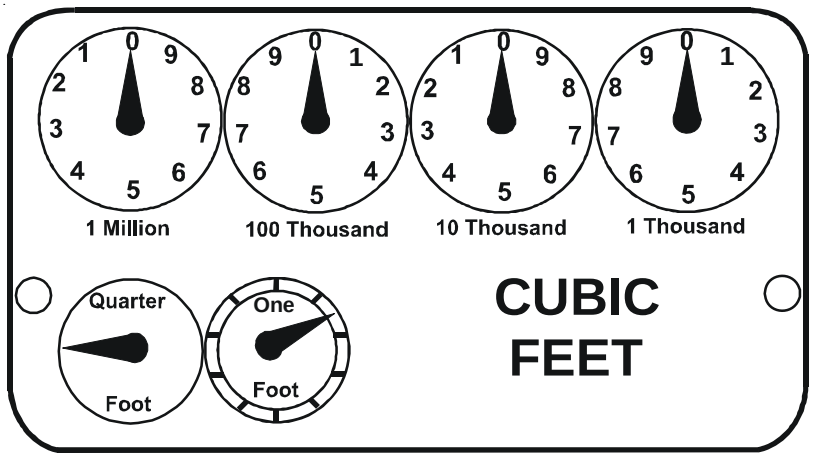

GAS RATE -- CUBIC FEET PER HOUR											
Seconds for One Revolution	Size of Test Dial					Seconds for One Revolution	Size of Test Dial				
	1/4 cu/ft	1/2 cu/ft	1 cu/ft	2 cu/ft	5 cu/ft		1/4 cu/ft	1/2 cu/ft	1 cu/ft	2 cu/ft	5 cu/ft
10	90	180	360	720	1800	36	25	50	100	200	500
11	82	164	327	655	1636	37	--	--	97	195	486
12	75	150	300	600	1500	38	23	47	95	189	474
13	69	138	277	555	1385	39	--	--	92	185	462
14	64	129	257	514	1286	40	22	45	90	180	450
15	60	120	240	480	1200	41	--	--	--	176	439
16	56	113	225	450	1125	42	21	43	86	172	429
17	53	106	212	424	1059	43	--	--	--	167	419
18	50	100	200	400	1000	44	--	41	82	164	409
19	47	95	189	379	947	45	20	40	80	160	400
20	45	90	180	360	900	46	--	--	78	157	391
21	43	86	171	343	857	47	19	38	76	153	383
22	41	82	164	327	818	48	--	--	75	150	375
23	39	78	157	313	783	49	--	--	--	147	367
24	37	75	150	300	750	50	18	36	72	144	360
25	36	72	144	288	720	51	--	--	--	141	355
26	34	69	138	277	692	52	--	--	69	138	346
27	33	67	133	265	667	53	17	34	--	136	340
28	32	64	129	257	643	54	--	--	67	133	333
29	31	62	124	248	621	55	--	--	--	131	327
30	30	60	120	240	600	56	16	32	64	129	321
31	--	--	116	232	581	57	--	--	--	126	316
32	28	56	113	225	563	58	--	31	62	124	310
33	--	--	109	218	545	59	--	--	--	122	305
34	26	53	106	212	529	60	15	30	60	120	300
35	--	--	103	206	514						

SERVICING

Service Problem	No Heat			Unsatisfactory Heat						Test Method Remedy	See Service Procedure Reference
POSSIBLE CAUSE DOTS IN ANALYSIS GUIDE INDICATE "POSSIBLE CAUSE" SYMPTOM	System Will Not Start	Burner Won't Ignite	Burner Ignites-Locks Out	Burner Shuts Off prior to T'Stat being Satisfied	Short Cycles	Long Cycles	Soot and /or Fumes	Too Much Heat	Not Enough Heat		
Power Failure	●									Test Voltage	S-1
Blown Fuse	●									Test Voltage	S-4
Loose Connection	●									Check Wiring	S-2
Shorted or Broken Wires	●									Check Wiring	S-3A
No Low Voltage	●									Check Transformer	S-4
Faulty Thermostat	●				●	●		●	●	Check Thermostat	S-3A
Faulty Transformer	●									Check Transformer	S-4
Poor or High Resistance Ground			●							Measure Ground Resistance	S-17B
Improper Heat Anticipator Setting					●	●		●	●	Adjust Heat Anticipator Setting	S-3B
Improper Thermostat Location					●	●		●	●	Relocate Thermostat	S-316
Faulty Limit or Roll Out Switch		●		●						Test Control	S-300 / S-302
Faulty Flame Sensor			●							Test Flame Sensor	S-314
Faulty Ignition Control	●	●	●							Test Control	S-313
Gas Valve or Gas Supply Shut Off		●								Turn Valves to On Position	S-317
Faulty Induced Draft Blower		●					●			Test Induced Draft Motor	S-303
Faulty Blower Motor (PSC)		●		●						Test Blower Motor (PSC)	S-16A,B,C
Broken or Shorted Ignitor		●								Test Ignitor	S-308
Dirty Flame Sensor, Low UA			●							Clean Flame Sensor	S-314
Stuck Gas Valve		●					●	●		Replace Gas Valve	S-304
Faulty Gas Valve		●					●		●	Replace Gas Valve	S-304
Open Auxiliary Limit		●		●						Reset Control	S-301
Improper Air Flow or Distribution				●					●	Check Duct Static	S-200
Cycling on Limit				●	●				●	Check Controls & Temperature Rise	S-201 / S-300
Delayed Ignition							●			Test for Delayed Ignition	S-312
Flashback							●			Test for Flashback	S-309 / S-311
Orifice Size							●	●	●	Check Orifices	S-306 / S-311
Gas Pressure		●					●	●	●	Check Gas Pressure	S-307
Cracked Heat Exchanger							●			Check Burner Flames	S-305
Furnace Undersized						●			●	Replace with Proper Size Furnace	S-318
Furnace Oversized					●					Replace with Proper Size Furnace	S-318
Faulty Pressure Switch		●	●	●						Test Pressure Switch	S-310
Blocked or Restricted Flue							●			Check Flue/Drawdown Pressure	S-310
Open Roll Out Switch		●	●							Test Flame Roll Out Control	S-302
Bouncing On Pressure Switch			●							Test Negative Pressure	S-310

SERVICING

SERVICE NUMBERS

S-1 CHECKING VOLTAGE 46
S-2 CHECKING WIRING 46
S-3A THERMOSTAT AND WIRING 46
S-3B HEATING ANTICIPATOR 46
S-4 CHECKING TRANSFORMER AND CONTROL CIRCUIT 47
S-10 CAPACITANCE CHECK 47
S-15 CHECKING CAPACITOR 47
S-15A RESISTANCE CHECK 48
S-16 CHECKING AIR CIRCULATOR BLOWER MOTOR (PSC) 48
S-200 CHECKING DUCT STATIC 48
S-201 CHECKING TEMPERATURE RISE 49
S-300 CHECKING PRIMARY LIMIT CONTROL 49
S-301 CHECKING AUXILIARY LIMIT CONTROL 50
S-302 CHECKING FLAME ROLLOUT CONTROL 51
S-303 INDUCED DRAFT BLOWER MOTOR 52
S-304 CHECKING GAS VALVE (REDUNDANT) 52
S-305 CHECKING MAIN BURNERS 52
S-306 CHECKING ORIFICES 52
S-307 CHECKING GAS PRESSURE 53
S-308 CHECKING HOT SURFACE IGNITOR 56
S-309 CHECKING FOR FLASHBACK 56
S-310 CHECKING PRESSURE CONTROL 56
S-311 HIGH ALTITUDE APPLICATION (USA) 57
S-312 CHECKING FOR DELAYED IGNITION 57
S-313 CHECKING INTEGRATED IGNITION CONTROL BOARDS 57
S-314 CHECKING FLAME SENSOR 58

SERVICING

S-1 CHECKING VOLTAGE

WARNING

HIGH VOLTAGE
DISCONNECT ALL POWER BEFORE SERVICING OR CHANGING ANY ELECTRICAL WIRING. MULTIPLE POWER SOURCES MAY BE PRESENT. FAILURE TO DO SO MAY CAUSE PROPERTY DAMAGE, PERSONAL INJURY OR DEATH.

1. Remove the burner door to gain entry to the Junction Box.
2. Remove cover from the Junction Box and gain access to incoming power lines.

With Power ON:

WARNING

LINE VOLTAGE NOW PRESENT

3. Using a voltmeter, measure the voltage across the hot and neutral connections.

NOTE: To energize the furnace, the Door Interlock Switch must be engaged at this point.

4. No reading - indicates open wiring, open fuse, no power, or faulty Door Interlock Switch from unit to fused disconnect service. Repair as needed.
5. With ample voltage at line voltage connectors, energize the furnace blower motor by jumpering terminals R to G on the integrated ignition control.
6. With the blower motor in operation, the voltage should be 115 volts ± 10 percent.
7. If the reading falls below the minimum voltage, check the line wire size. Long runs of undersized wire can cause low voltage. If wire size is adequate, notify the local power company of the condition.
8. After completing check and/or repair, replace Junction Box cover and reinstall the service panel doors.
9. Turn on electrical power and verify proper unit operation.

S-2 CHECKING WIRING

WARNING

DISCONNECT ALL POWER BEFORE SERVICING.

1. Check wiring visually for signs of overheating, damaged insulation and loose connections.
2. Use an ohmmeter to check continuity of any suspected open wires.
3. If any wires must be replaced, replace with AWM, 105°C. 2/64 thick insulation of the same gauge or its equivalent.

CHECKING THERMOSTAT, WIRING AND ANTICIPATOR

S-3A THERMOSTAT AND WIRING

WARNING

DISCONNECT ALL POWER BEFORE SERVICING.

1. Remove the blower compartment door to gain access to the thermostat low voltage wires located at the furnace integrated control module terminals.
2. Remove the thermostat low voltage wires at the furnace control panel terminal board.
3. Jumper terminals R to W on the integrated ignition control.

With Power On (and Door Interlock Switch closed):

WARNING

LINE VOLTAGE NOW PRESENT

4. Induced Draft Motor must run and pull in pressure switch.
5. If the hot surface ignitor heats and at the end of the ignitor warm-up period the gas valve opens and the burners ignite, the trouble is in the thermostat or wiring.
6. With power off, check the continuity of the thermostat and wiring. Repair or replace as necessary.

If checking the furnace in the air conditioning mode, proceed as follows.

7. With power off, Jumper terminals R to Y to G.
8. Turn on the power.
9. If the furnace blower motor starts and the condensing unit runs, then the trouble is in the thermostat or wiring. Repair or replace as necessary.
10. After completing check and/or repair of wiring and check and/or replacement of thermostat, reinstall blower compartment door.
11. Turn on electrical power and verify proper unit operation.

S-3B HEATING ANTICIPATOR

On older thermostats the heating anticipator is a wire wound adjustable heater which is energized during the "ON" cycle to help prevent overheating of the conditioned space.

The anticipator is a part of the thermostat and if it should fail for any reason, the thermostat must be replaced. Some thermostats have a cycle rate adjustment switch to set cycles per hour.

The heating anticipator setting for furnaces covered in this manual is **0.70 Amps**.

SERVICING

If the anticipator current draw is unknown, then a current amp draw should be measured to determine the anticipator setting. Use an amprobe as shown in the following drawing.

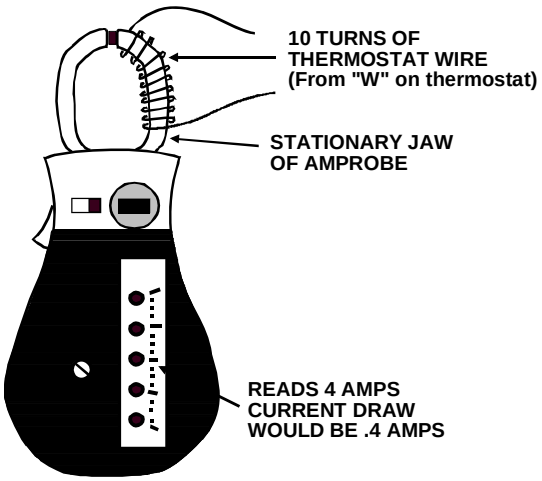

Checking Heating Anticipator Current (Amp) Draw

Cooling Anticipator

The cooling anticipator is a small heater (resistor) in the thermostat. During the "OFF" cycle it heats the bimetal element helping the thermostat call for the next cooling cycle. This prevents the room temperature from rising too high before the system is restarted. A properly sized anticipator should maintain room temperature within 1 1/2 to 2 degrees.

The anticipator is fixed in the subbase and is not to be replaced. If the anticipator should fail for any reason, the subbase must be changed.

S-4 CHECKING TRANSFORMER AND CONTROL CIRCUIT

A step-down transformer 120 volt primary to 24 volt secondary, 40 VA (Heating and Cooling Models) supplies ample capacity of power for either operation.

WARNING

HIGH VOLTAGE
DISCONNECT ALL POWER BEFORE SERVICING OR CHANGING ANY ELECTRICAL WIRING. MULTIPLE POWER SOURCES MAY BE PRESENT. FAILURE TO DO SO MAY CAUSE PROPERTY DAMAGE, PERSONAL INJURY OR DEATH.

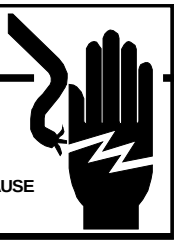

1. Remove blower compartment door to gain access to the thermostat low voltage wires located at the furnace integrated control module.
2. Remove the thermostat low voltage wires at the furnace integrated control module terminals.

With Power On (and Door Interlock Switch closed):

WARNING

LINE VOLTAGE NOW PRESENT

3. Use a voltmeter, check voltage across terminals R and C. Must read 24 VAC.
4. No voltage indicates faulty transformer, open fuse, bad wiring, bad splice, or open door interlock switch.
5. Check transformer primary voltage at incoming line voltage connections, fuse, splices, and blower door interlock switch.
6. If line voltage is available to the primary side of transformer and not at secondary side, the transformer is inoperative. Replace.
7. After completing check and/or replacement of transformer and check and/or repair of control circuit, reinstall blower compartment door.
8. Turn on electrical power and verify proper unit operation.

S-10 CAPACITANCE CHECK

With power On (and Door Interlock Switch closed):

WARNING

LINE VOLTAGE NOW PRESENT

S-15 CHECKING CAPACITOR

The direct drive motors are of the permanent split capacitor design. A run capacitor is wired across the auxiliary and a portion of the main windings. The capacitors primary function is to reduce the line current while greatly improving the torque characteristics of a motor. This is accomplished by using the 90° phase relationship between the capacitor current and voltage in conjunction with the motor windings so that the motor will give two phase operation when connected to a single phase circuit. The capacitor also reduces the line current to the motor by improving the power factor to the load.

WARNING

DISCHARGE CAPACITOR THROUGH A 20 TO 30 OHM RESISTOR BEFORE HANDLING.

Two quick ways to test a capacitor are a resistance and a capacitance check. Refer to the next two figures for proper meter connections for the resistance and capacitance testing of the capacitor.

NOTE: Use a capacitor tester to check capacitance.

SERVICING

S-15A RESISTANCE CHECK

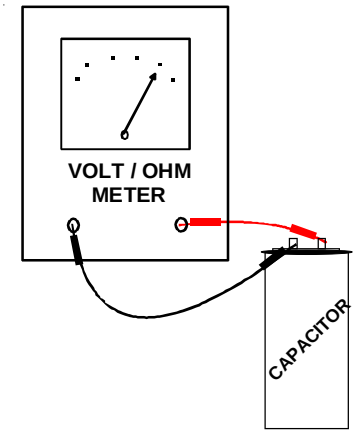

Testing Capacitor Resistance

WARNING

HIGH VOLTAGE
DISCONNECT ALL POWER BEFORE SERVICING OR INSTALLING THIS UNIT. MULTIPLE POWER SOURCES MAY BE PRESENT. FAILURE TO DO SO MAY CAUSE PROPERTY DAMAGE, PERSONAL INJURY OR DEATH.

1. Remove blower compartment door to gain access to capacitor.
2. Discharge capacitor and remove wire leads.
3. Set an ohmmeter on its highest ohm scale and connect the leads to the capacitor.
   a. Good Condition - indicator swings to zero and slowly returns toward infinity.
   b. Shorted - indicator swings to zero and stops there - replace.
   c. Open - no reading - replace. Reverse leads. Check again no reading - replace.
   d. Reverse leads and recheck.

S-16 CHECKING AIR CIRCULATOR BLOWER MOTOR (PSC)

WARNING

DISCONNECT ALL POWER BEFORE SERVICING.

1. Remove blower compartment door to gain access to the circulator blower motor and integrated ignition control.
2. Discharge the capacitor on (PSC) motors. Disconnect the motor wire leads from its connection point at the integrated ignition control module and capacitor if applicable.
3. Using a ohmmeter, test for continuity between each of the motor leads.
4. Touch one probe of the ohmmeter to the motor frame (ground) and the other probe in turn to each lead.

If the windings do not test continuous or a reading is obtained to ground, replace the motor.

5. After completing check and/or replacement of circulator blower motor or induced draft blower motor, reinstall blower compartment door.
6. Turn on electrical power and verify proper unit operation.

WARNING

DISCONNECT ALL POWER BEFORE SERVICING.

S-200 CHECKING DUCT STATIC

The maximum and minimum allowable external static pressures are found in the specification section. These tables also show the amount of air being delivered at a given static by a given motor speed or pulley adjustment.

The furnace motor cannot deliver proper air quantities (CFM) against statics other than those listed.

Too great of an external static pressure will result in insufficient air that can cause excessive temperature rise, resulting in limit tripping, etc. Whereas not enough static may result in motor overloading.

To determine proper air movement, proceed as follows:

1. With clean filters in the furnace, use a draft gauge (inclined manometer) to measure the static pressure of the return duct at the inlet of the furnace. (Negative Pressure)
2. Measure the static pressure of the supply duct. (Positive Pressure)
3. Add the two (2) readings together for total external static pressure.

NOTE: Both readings may be taken simultaneously and read directly on the manometer if so desired. If an air conditioner coil or Electronic Air Cleaner is used in conjunction with the furnace, the readings must also include theses components, as shown in the following drawing.

4. Consult proper tables for the quantity of air.

If the total external static pressure exceeds the minimum or maximum allowable statics, check for closed dampers, registers, undersized and/or oversized poorly laid out duct work.

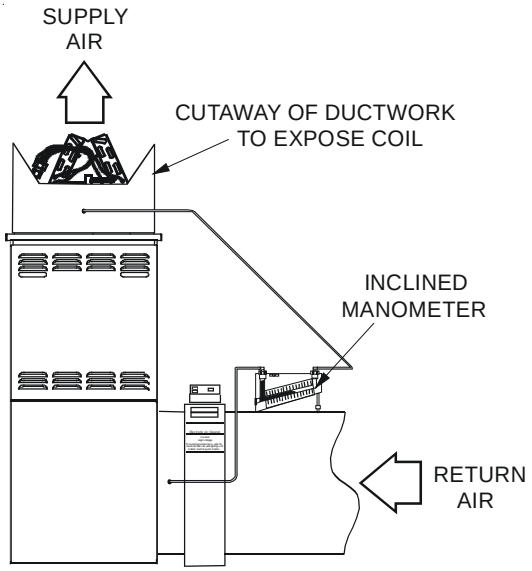

Checking Static Pressure
(80% Furnace Shown, 90% Similar)

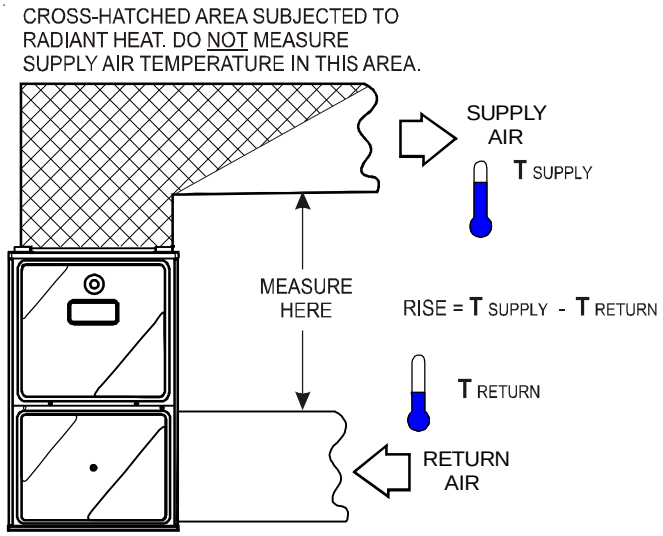

Checking Temperature Rise

S-201 CHECKING TEMPERATURE RISE

The more air (CFM) being delivered through a given furnace, the less the rise will be; so the less air (CFM) being delivered, the greater the rise. The temperature rise should be adjusted in accordance to a given furnace specifications and its external static pressure. An incorrect temperature rise may result in condensing in or overheating of the heat exchanger. An airflow and temperature rise table is provided in the blower performance specification section. Determine and adjust temperature rise as follows:

1. Operate furnace with burners firing for approximately ten minutes. Check BTU input to furnace - do not exceed input rating stamped on rating plate. Ensure all registers are open and all duct dampers are in their final (fully or partially open) position.
2. Place thermometers in the return and supply ducts as close to the furnace as possible. Thermometers must not be influenced by radiant heat by being able to “see” the heat exchanger.
3. Subtract the return air temperature from the supply air temperature to determine the air temperature rise. Allow adequate time for thermometer readings to stabilize.
4. Adjust temperature rise by adjusting the circulator blower speed. Increase blower speed to reduce temperature rise. Decrease blower speed to increase temperature rise. Refer to *Circulator Blower Speed* section in the Product Design section of this manual for speed changing details. Temperature rise is related to the BTUH output of the furnace and the amount of air (CFM) circulated over the heat exchanger. Measure motor current draw to determine that the motor is not overloaded during adjustments.

S-300 CHECKING PRIMARY LIMIT CONTROL

All use a nonadjustable, automatic reset, bi-metal type limit control. Refer to the following drawing for the location of the primary limit.

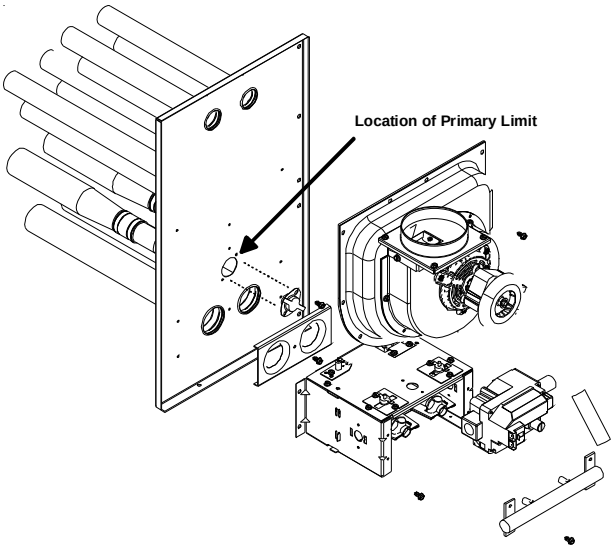

Primary Limit Control Location
(80% Upflow Furnace Shown, Counterflow Similar)

Style 1 drawing illustrates the Primary Limit used on the 80% furnaces.

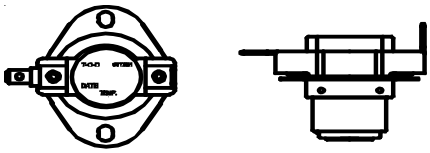

Style 1

WARNING

HIGH VOLTAGE
DISCONNECT ALL POWER BEFORE SERVICING OR CHANGING ANY ELECTRICAL WIRING. MULTIPLE POWER SOURCES MAY BE PRESENT. FAILURE TO DO SO MAY CAUSE PROPERTY DAMAGE, PERSONAL INJURY OR DEATH.

1. Remove burner compartment door to gain access to the primary limit.
2. Remove low voltage wires at limit control terminals.
3. With an ohmmeter, test between these two terminals as shown in the following drawing. The ohmmeter should read continuous unless heat exchanger temperature is above limit control setting. If not as above, replace the control.

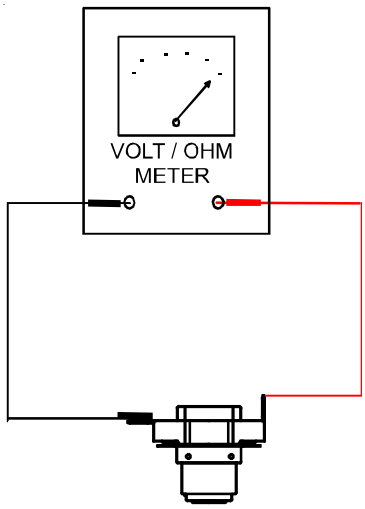

Testing Primary Limit Control

S-301 CHECKING AUXILIARY LIMIT CONTROL

Automatic Reset Auxiliary Limit Located in Blower Scroll

The **80% "H" model** furnaces use an auxiliary limit (automatic reset) control connected in series with the gas valve and integrated control module. If its temperature should be exceeded, it will open, interrupting the voltage to the gas valve causing it to close. The auxiliary limit is located on the front side of the blower housing, near the center, on all 80% single-stage furnaces, as shown in the following illustration.

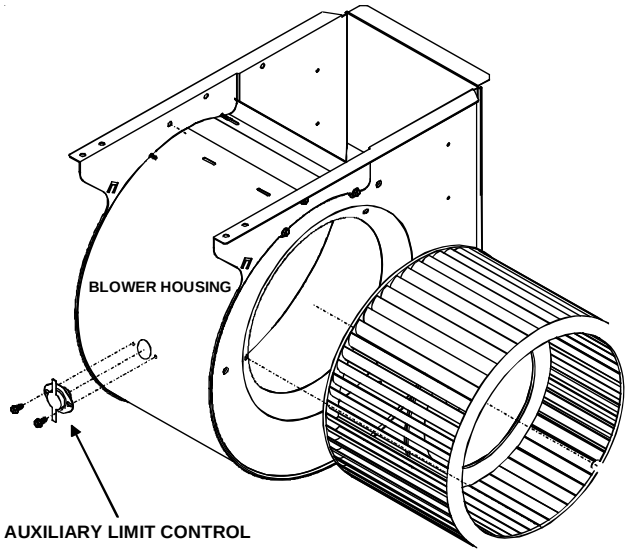

Auxiliary Limit Control Location

WARNING

HIGH VOLTAGE

DISCONNECT ALL POWER BEFORE SERVICING OR INSTALLING THIS UNIT. MULTIPLE POWER SOURCES MAY BE PRESENT. FAILURE TO DO SO MAY CAUSE PROPERTY DAMAGE, PERSONAL INJURY OR DEATH.

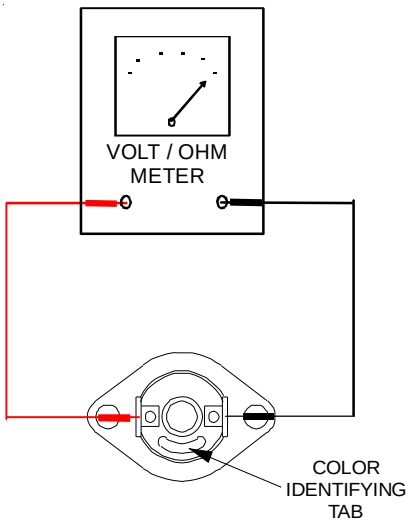

Testing Auxiliary Limit Control

WARNING

TO AVOID POSSIBLE FIRE, ONLY RESET THE AUXILIARY LIMIT CONTROL ONCE. IF IT SHOULD OPEN A SECOND TIME, A QUALIFIED SERVICER MUST DETERMINE WHY THE AUXILIARY LIMIT OPENED BEFORE RESETTING AGAIN.

S-302 CHECKING FLAME ROLLOUT CONTROL

A temperature activated manual reset control is mounted to the manifold assembly on 80% furnaces,

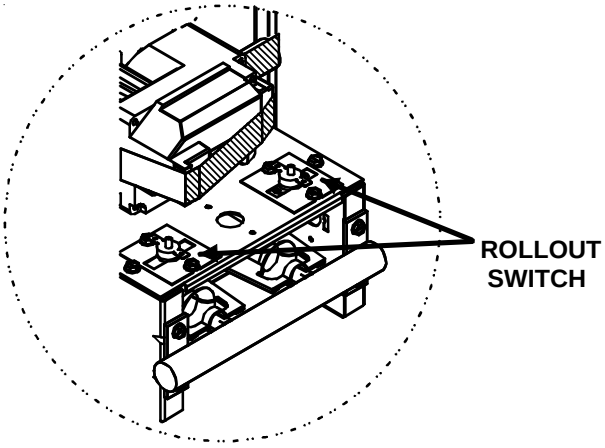

Flame Rollout Switch Location
(80% Upflow Furnace Shown, Downflow Similar)

The control is designed to open should a flame roll out occur. An over firing condition or flame impingement on the heat shield may also cause the control to open. If the rollout control opens, the air circulation blower will run continuously.

On single-stage 80% and 90% models, the ignition control diagnostic light will flash (6) six times indicating a trip of the rollout switch.

WARNING

LINE VOLTAGE NOW PRESENT

1. Remove the burner compartment door to gain access to the rollout switch(es) mounted to burner bracket.

The servicer should reset the ignition control by opening and closing the thermostat circuit. Then look for the ignitor glowing which indicates there is power to the ignition control. Measure the voltage between each side of the rollout control and ground while the ignition control tries to power the gas valve.

2. Measure the voltage between each side of the rollout control and ground during the ignition attempt. Refer to the following figure.

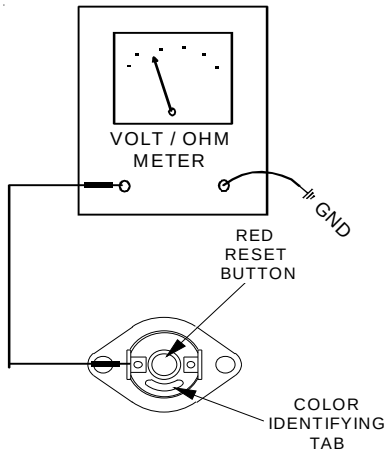

Checking Flame Rollout Switch

a. If no voltage is measured on either side of control it indicates ignition control or wiring to control problem.
b. If voltage is measured on one side of the control and not the other it indicates the control is open.
c. If voltage is measured on both sides of the control the wiring to gas valve or valve is at fault.

3. After check and/or replacement of rollout switch, reinstall burner compartment door and verify proper unit operation.

S-303 INDUCED DRAFT BLOWER MOTOR

WARNING

HIGH VOLTAGE
DISCONNECT ALL POWER BEFORE SERVICING OR INSTALLING THIS UNIT. MULTIPLE POWER SOURCES MAY BE PRESENT. FAILURE TO DO SO MAY CAUSE PROPERTY DAMAGE, PERSONAL INJURY OR DEATH.

1. Remove burner compartment door to gain access to the induced draft blower motor.
2. Disconnect the motor wire leads from its connection point at the induced draft motor.
3. Using a ohmmeter, test for continuity between each of the motor leads.
4. Touch one probe of the ohmmeter to the motor frame (ground) and the other probe in turn to each lead.

   If the windings do not test continuous or a reading is obtained to ground, replace the motor.
5. If the windings have a continuity reading, reconnect wires. Turn power on to the furnace and turn the thermostat on in the heating mode. Check voltage for 115V at the induced draft motor terminals during the trial for ignition. If you have 115V and the motor does not run, replace the induced draft motor.
6. After completing check and/or replacement of induced draft motor, reinstall burner compartment door.
7. Turn on electrical power and verify proper unit operation.

S-304 CHECKING GAS VALVE (Redundant)

A combination redundant operator type gas valve which provides all manual and automatic control functions required for gas fired heating equipment is used.

The valve provides control of main burner gas flow, pressure regulation, and 100 percent safety shut-off.

WARNING

DISCONNECT ALL POWER BEFORE SERVICING

Two stage gas valves always require 24 volts between common and low fire (main coil) to open. H model furnaces are designed to light in high fire. Therefore; when checking a gas valve on the H model furnace, look for 24 volt power between common and low AND common and high. Also see section S-307 on Checking Gas Pressure.

S-305 CHECKING MAIN BURNERS

The main burners are used to provide complete combustion of various fuels in a limited space, and transfer this heat of the burning process to the heat exchanger.

Proper ignition, combustion, and extinction are primarily due to burner design, orifice sizing, gas pressure, primary and secondary air, vent and proper seating of burners.

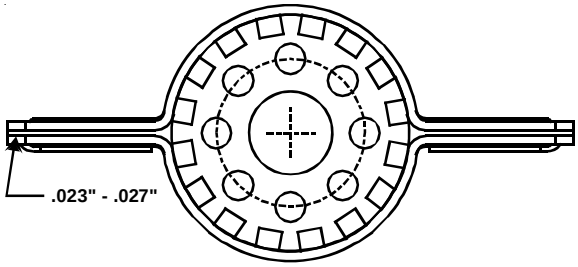

Beckett Burner

WARNING

DISCONNECT ALL GAS AND ELECTRICAL POWER SUPPLY.

In checking main burners, look for signs of rust, oversized and undersized carry over ports restricted with foreign material, etc, refer to previous drawing. Burner cross-over slots must not be altered in size.

S-306 CHECKING ORIFICES

DM80HS/DD80HS furnaces have #45 natural gas orifices. That is an orifice which has a fixed bore and position as shown in the following drawing.

No resizing should be attempted until all factors are taken into consideration such as inlet and manifold gas pressure, alignment, and positioning, specific gravity and BTU content of the gas being consumed.

SERVICING

The only time resizing is required is when a reduction in firing rate is required for an increase in altitude.

Orifices should be treated with care in order to prevent damage. They should be removed and installed with a box-end wrench in order to prevent distortion. In no instance should an orifice be peened over and redrilled. This will change the angle or deflection of the vacuum effect or entraining of primary air, which will make it difficult to adjust the flame properly. This same problem can occur if an orifice spud of a different length is substituted.

WARNING

DISCONNECT ALL GAS AND ELECTRICAL POWER SUPPLY.

1. Check orifice visually for distortion and/or burrs.
2. Check orifice size with orifice sizing drills.
3. If resizing is required, a new orifice of the same physical size and angle with proper drill size opening should be installed.

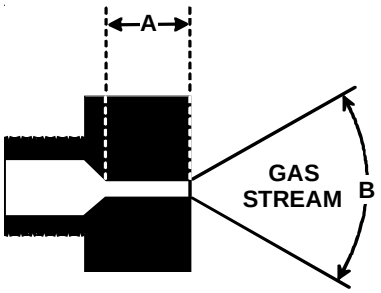

The length of Dimension "A" determines the angle of Gas Stream "B".

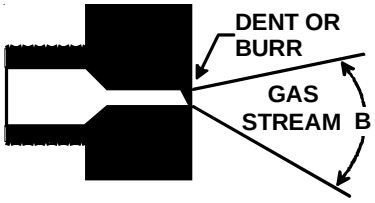

A dent or burr will cause a severe deflection of the gas stream.

S-307 CHECKING GAS PRESSURE

Gas Supply Pressure Measurement

CAUTION

TO PREVENT UNRELIABLE OPERATION OR EQUIPMENT DAMAGE, THE INLET GAS SUPPLY PRESSURE MUST BE AS SPECIFIED ON THE UNIT RATING PLATE WITH ALL OTHER HOUSEHOLD GAS FIRED APPLIANCES OPERATING.

Gas inlet and manifold pressures should be checked and adjusted in accordance to the type of fuel being consumed.

The line pressure supplied to the gas valve must be within the range specified below. The supply pressure can be measured at the gas valve inlet pressure tap or at a hose fitting installed in the gas piping drip leg. The supply pressure must be measured with the burners operating. To measure the gas supply pressure, use the following procedure.

WARNING

DISCONNECT ELECTRICAL POWER AND SHUT OFF GAS SUPPLY.

1. After turning off gas to furnace at the manual gas shut-off valve external to the furnace, remove burner compartment door to gain access to the gas valve.
2. Connect a calibrated water manometer (or appropriate gas pressure gauge) at either the gas valve inlet pressure tap or the gas piping drip leg as shown in the following figures.

NOTE: At either location, a hose fitting must be installed prior to making the hose connection.

NOTE: Use apapter kit #0151K00000S to measure gas pressure on White-Rodgers and 36G54 gas valves.

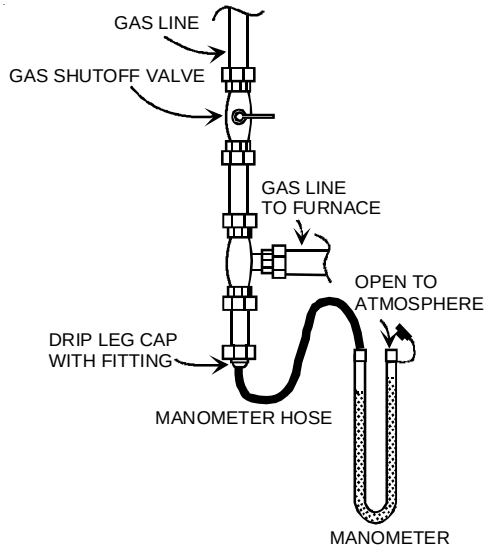

Measuring Inlet Gas Pressure (Alternate Method)

3. Turn ON the gas and electrical power supply and operate the furnace and all other gas consuming appliances on the same gas supply line.
4. Measure furnace gas supply pressure with burners firing. Supply pressure must be within the range specified in the following table.

INLET GAS SUPPLY PRESSURE		
Natural Gas	Minimum: 4.5" w.c.	Maximum: 10.0" w.c.
Propane Gas	Minimum: 11.0" w.c.	Maximum: 13.0" w.c.

If supply pressure differs from above, make necessary adjustments to pressure regulator, gas piping size, etc., and/or consult with local gas utility.

WARNING

HIGH VOLTAGE
DISCONNECT ALL ELECTRICAL POWER AND SHUT OFF GAS SUPPLY BEFORE SERVICING OR INSTALLING THIS UNIT. MULTIPLE POWER SOURCES MAY BE PRESENT. FAILURE TO DO SO MAY CAUSE PROPERTY DAMAGE, PERSONAL INJURY OR DEATH.

5. Disconnect manometer after turning off gas at manual shutoff valve. Reinstall plug before turning on gas to furnace.
6. Turn OFF any unnecessary gas appliances started in step 3.
7. Turn on gas to furnace and check for leaks. If leaks are found, repair and then reinstall burner compartment door.
8. Turn on electrical power and verify proper unit operation.

WARNING

HIGH VOLTAGE
DISCONNECT ALL ELECTRICAL POWER AND SHUT OFF GAS SUPPLY BEFORE SERVICING OR INSTALLING THIS UNIT. MULTIPLE POWER SOURCES MAY BE PRESENT. FAILURE TO DO SO MAY CAUSE PROPERTY DAMAGE, PERSONAL INJURY OR DEATH.

Gas Manifold Pressure Measurement and Adjustment

Natural Gas Adjustments

To test & set low fire manifold gas pressure on the H model furnace it is recommended that dip switch #2 be set to the “Two Stage” position and dip switch #3 be set to 5 minute delay. Operating sequence will be; high fire ignition, after several seconds the burner input will go to low fire for a 5 minute period. Low fire can be set during this time. To check & set high fire it is recommended that dip switch #2 be set to single stage for the test period.

WARNING

HIGH VOLTAGE
DISCONNECT ALL ELECTRICAL POWER AND SHUT OFF GAS SUPPLY BEFORE SERVICING OR INSTALLING.

NOTE: Use adapter kit #0151K00000S to measure gas pressure on White-Rodgers 36G54 gas valves.

Only small variations in gas pressure should be made by adjusting the gas valve pressure regulator. The manifold pressure must be measured with the burners operating. To measure and adjust the manifold pressure, use the following procedure.

1. After turning off gas to furnace at the manual gas shutoff valve external to the furnace, remove burner compartment door to gain access to the gas valve.
2. Connect a calibrated water manometer (or appropriate gas pressure gauge) at the gas valve outlet pressure tap. Refer to *Measuring Gas Pressure: Two-Stage Valves* figure for two-stage gas valve outlet pressure tap connections.

WARNING

LINE VOLTAGE NOW PRESENT

3. White-Rodgers 36G54 Valves:
   a. Back outlet pressure test screw (out one turn (counterclockwise, not more than one turn).
   b. Attach a hose and manometer to the outlet pressure.
   c. Turn ON the gas supply. Set dip switch #2 set to “two stage”& dip switch #3 set to “5 minutes”
   d. Turn on power and close thermostat “R” and “W” contacts to provide a call for heat. The burners will light in high fire and go to low fire after several seconds.
   e. Measure the gas manifold pressure with burners firing. Adjust manifold pressure using the *Manifold Gas Pressure* table shown below.
   f. Remove regulator cover screw from the low (LO) outlet pressure regulator adjust tower and turn screw clockwise to increase pressure or counterclockwise to decrease pressure. Replace regulator cover screw. Open thermostat circuit to end the call for heat. Once the indoor blower turns off, turn off power to furnace.
   g. To check & set high fire, set switch#2 to single stage. Turn on furnace power, close thermostat “R” and “W” contacts to provide a call for heat.
   h. Remove regulator cover screw from the high (HI) outlet pressure regulator adjust tower and turn screw clockwise to increase pressure or counterclockwise to decrease pressure. Replace regulator cover screw.
   i. Turn off all electrical power and gas supply to the system.
   j. Remove the manometer hose from the hose barb fitting or outlet pressure boss.
   k. Turn outlet pressure test screw in to seal pressure port (clockwise, 7 in-lb minimum).

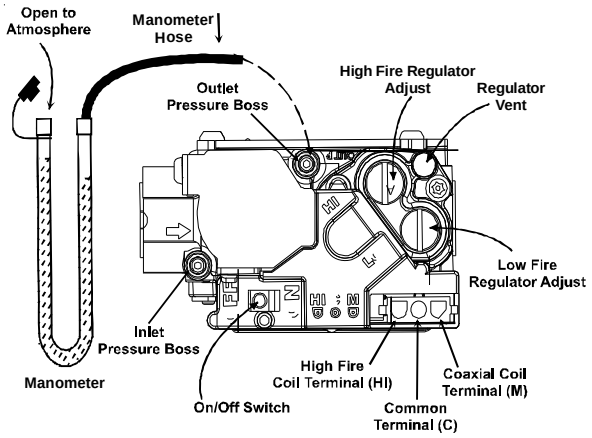

Measuring Manifold Gas Pressure (36G54 Valve)

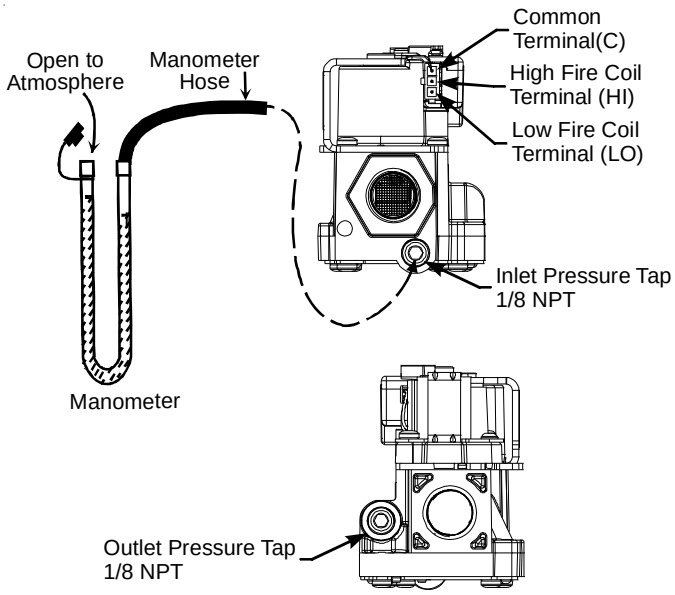

Honeywell Model VR9205 Connected to Manometer

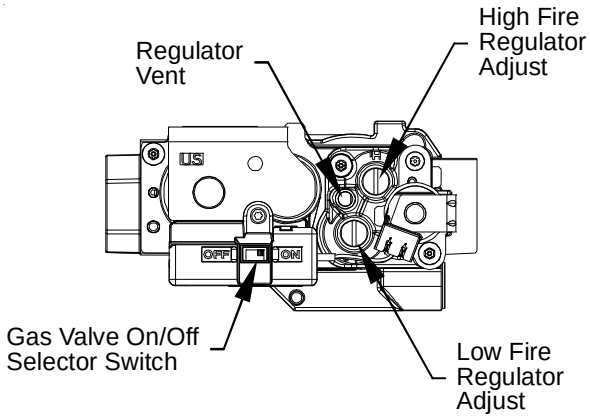

Honeywell Model VR9205 (Two-Stage)

Measuring Gas Pressure: Two-Stage Valves Cont'd

4. Remove regulator cover screw from the low (LO) outlet pressure regulator adjust tower and turn screw clockwise to increase pressure or counterclockwise to decrease pressure. Replace regulator cover screw.
   a. Close thermostat “R” and “W” contacts to provide a call for heat.
   b. Remove regulator cover screw from the high (HI) outlet pressure regulator adjust tower and turn screw clockwise to increase pressure or counterclockwise to decrease pressure. Replace regulator cover screw.
   c. Turn off all electrical power and gas supply to the system.
   d. Remove the manometer hose from the outlet pressure boss.
   e. Remove the 1/8" NPT hose barb fitting from the outlet pressure tap. Replace the outlet pressure boss plug and seal with a high quality thread sealer.

⚠ WARNING

HIGH VOLTAGE
DISCONNECT ALL ELECTRICAL POWER AND SHUT OFF GAS SUPPLY BEFORE SERVICING OR INSTALLING.

5. Turn on gas to furnace and check for leaks. If leaks are found, repair and then reinstall burner compartment door.
6. Turn on electrical power and verify proper unit operation. Make sure furnace operates at the proper manifold pressure at both high and low stage outputs.

Manifold Gas Pressure			
Gas	Rate	Range	Nominal
Natural Gas	High Stage	3.2 to 3.8" w.c.	3.5" w.c.
	Low Stage	1.6 to 2.2" w.c.	1.9" w.c.

WARNING

HIGH VOLTAGE
DISCONNECT ALL ELECTRICAL POWER AND SHUT OFF GAS SUPPLY BEFORE SERVICING OR INSTALLING THIS UNIT. MULTIPLE POWER SOURCES MAY BE PRESENT. FAILURE TO DO SO MAY CAUSE PROPERTY DAMAGE, PERSONAL INJURY OR DEATH.

WARNING

HIGH VOLTAGE
DISCONNECT ALL ELECTRICAL POWER AND SHUT OFF GAS SUPPLY BEFORE SERVICING OR INSTALLING.

Manifold Gas Pressure			
Gas	Rate	Range	Nominal
Propane Gas	High Stage	9.7 to 10.3" w.c.	10.0" w.c.
	Low Stage	5.7 to 6.3" w.c.	6.0" w.c.

S-308 CHECKING HOT SURFACE IGNITOR

120V Silicon Nitride Igniter - Daikin Brand H model furnaces use a 120V silicon nitride igniter for ignition. The normal operating temperature is approximately 2156°F - 2678°F. At room temperature the igniter ohm reading should be from 37-68 ohms.

Place unit in heating cycle, measure current draw of ignitor during preheat cycle. The steady state current at 120V is 0.37 to 0.68 amps. After checking and/or replacing of hot surface ignitor, reinstall burner compartment door and verify proper unit operation.

S-309 CHECKING FOR FLASHBACK

Flashback will also cause burning in the burner venturi, but is caused by the burning speed being greater than the gas-air flow velocity coming from a burner port.

Flashback may occur at the moment of ignition, after a burner heats up or when the burner turns off. The latter is known as extinction pop.

Since the end results of flashback and delayed ignition can be the same (burning in the burner venturi) a definite attempt should be made to determine which has occurred.

If flashback should occur, check for the following:

1. Improper gas pressure - adjust to proper pressure (See *S-307 CHECKING GAS PRESSURE*)..
2. Check burner for proper alignment and/or replace burner.
3. Improper orifice size - check orifice for obstruction.

S-310 CHECKING PRESSURE SWITCH

The pressure switch a safety device to prevent the combustion cycle from occurring with inadequate venting caused by a restricted or blocked vent pipe on the 80% and 90% furnaces.

WARNING

HIGH VOLTAGE
DISCONNECT ALL POWER BEFORE SERVICING OR INSTALLING THIS UNIT. MULTIPLE POWER SOURCES MAY BE PRESENT. FAILURE TO DO SO MAY CAUSE PROPERTY DAMAGE, PERSONAL INJURY OR DEATH.

1. Remove burner compartment door to gain access to pressure switch(es).
2. Remove wires from the pressure switch(es) electrical terminals.
3. Using a VOM check from common terminal to NC (Normally Closed) - should read open.

If switch reads as above proceed to Step 4, otherwise replace control.

4. Remove the pressure control hose from the control and interconnect with an inclined manometer as shown in the following figures.

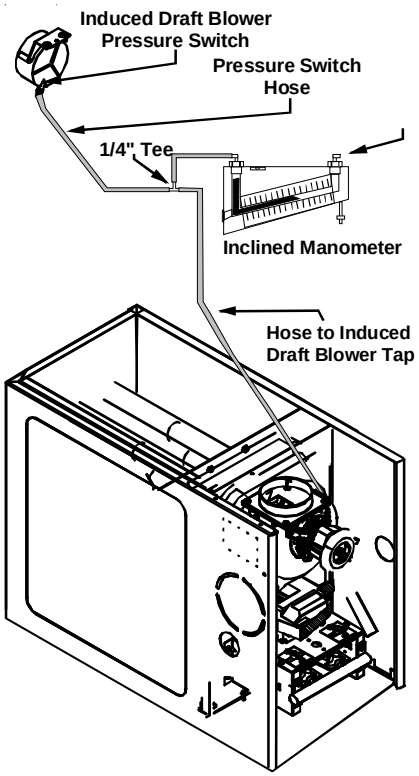

ID Blower Pressure Switch
Negative Pressure Measurement
(80% Upflow Single-Stage Furnace Shown, Counterflow Similar)

S-311 HIGH ALTITUDE APPLICATION (USA)

The furnace as shipped requires no change to run between 0 - 5500 feet. Do not attempt to increase the firing rate by changing orifices or increasing the manifold pressure below 5500 feet. This can causepoor combustion and equipment failure. High altitude installations above 5500 feet may require both a pressure switch and an orifice change. These changes are necessary to compensate for the natural reduction in the density of both the gasfuel and the combustion air at higher altitude.

For installations above 5500 feet, please refer to your distributor for required kit(s). Contact the distributor for a tabular listing of appropriate manufacturer's kits for propane gas and/or high altitude installations. The indicated kits must be used to insure safe and proper furnace operation. All conversions must be performed by a qualified installer, or service agency.

In some areas the gas supplier may artificially derate the gas in an effort to compensate for the effects of altitude. If the gas is artificially derated the appropriate orfice size must be determined based on the BTU/ft^3 content of the derated gas and the altitude. Refer to the National Fuel Gas Code, NFPA 54/ANSI Z223.1, and information provided by the gas supplier to determine the proper orifice size.

S-312 CHECKING FOR DELAYED IGNITION

Delayed ignition is a delay in lighting a combustible mixture of gas and air which has accumulated in the combustion chamber.

Furnace design makes this extremely unlikely unless safety controls have been by-passed or tampered with. Never by-pass or alter furnace controls.

If delayed ignition should occur, the following should be checked:

1. Improper gas pressure - adjust to proper pressure (See *S-307 CHECKING GAS PRESSURE*).
2. Improper burner positioning - burners should be in locating slots, level front to rear and left to right.
3. Carry over (lighter tube or cross lighter) obstructed - clean.
4. Main burner orifice(s) deformed, or out of alignment to burner - replace.

S-313 CHECKING INTEGRATED IGNITION CONTROL BOARDS

NOTE: Failure to earth ground the furnace, reversing the neutral and hot wire connection to the line (polarity), or a high resistance connection in the neutral line may cause the control to lockout due to failure to sense flame.

WARNING

TO AVOID THE RISK OF ELECTRICAL SHOCK, WIRING TO THE UNIT MUST BE PROPERLY POLARIZED AND GROUNDED. DISCONNECT POWER BEFORE PERFORMING SERVICE LISTED BELOW.

The ground wire must run from the furnace all the way back to the electrical panel. Proper grounding can be confirmed by disconnecting the electrical power and measuring resistance between the neutral (white) connection and the burner closest to the flame sensor. Resistance should be less than 2 ohms.

The ignition control is a combination electronic and electromechanical device and is not field repairable. Complete unit must be replaced.

WARNING

LINE VOLTAGE NOW PRESENT

These tests must be completed within a given time frame due to the operation of the ignition control.

The ignition control is capable of diagnosing many furnace failures to help in troubleshooting. The trial for ignition period is 4 seconds.

1. Check for 120 volts from Line 1 (Hot) to Line 2 (Neutral) at the ignition control. No voltage, check the door switch connections and wire harness for continuity.

SERVICING

2. Check for 24 volts from W to C terminal on the ignition control. No voltage. Check transformer, room thermostat, and wiring.

   If you have 24 volts coming off the transformer but receive approximately 13 volts on the terminal board between (C) and (R), check for blown fuse.

3. Check for 120 volts to the induced draft blower by measuring voltage between Pin 1 (on the 2-pin connector) and neutral located on circuit board. No voltage, check for loose connection in the 2-pin connector or replace ignition control.

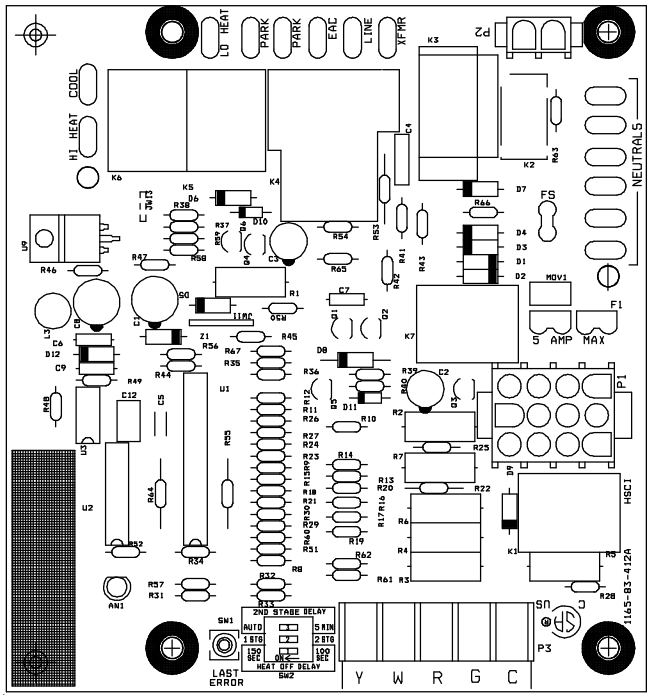

PCBBF132 Control Board

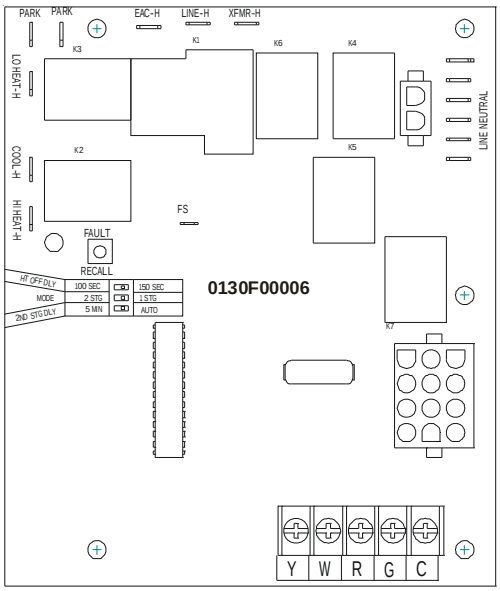

WR50M56-289

S-314 CHECKING FLAME SENSOR

A flame sensing device is used in conjunction with the ignition control module to prove combustion. If proof of flame is not present the control will de-energize the gas valve and "retry" for ignition or lockout.

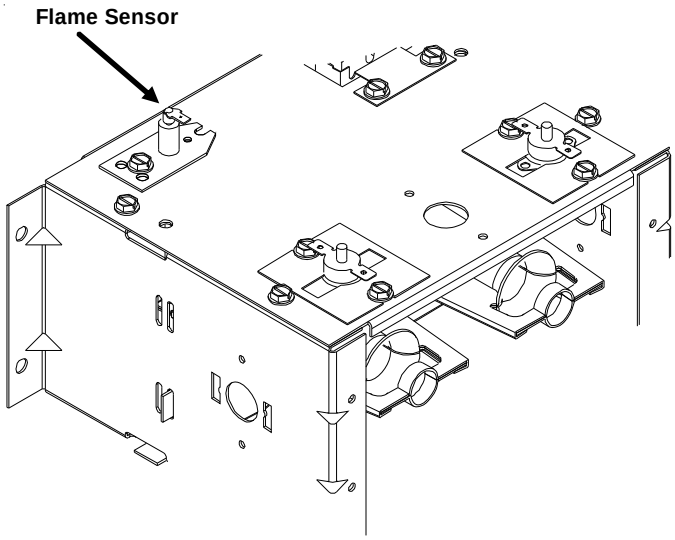

(80% Upflow Model Shown, Counterflow Similar)

WARNING

HIGH VOLTAGE

DISCONNECT ALL POWER BEFORE SERVICING OR INSTALLING THIS UNIT. MULTIPLE POWER SOURCES MAY BE PRESENT. FAILURE TO DO SO MAY CAUSE PROPERTY DAMAGE, PERSONAL INJURY OR DEATH.

1. Disconnect the orange flame sensor wire from the sensor .
2. Connect a micro-amp meter in series with this wire and the sensor terminal.
3. Place the unit into a heating cycle.

WARNING

LINE VOLTAGE NOW PRESENT

4. As soon as flame is established a micro-amp reading should be evident once proof of flame (micro-amp reading) is established, the hot surface ignitor will be de-energized.

5. The Integrated Ignition controls will have 1 to 4 micro-amps. If the micro-amp reading is less than the minimum specified, check for high resistance wiring connections, sensor to burner gap, dirty flame sensor, or poor grounding.
6. If absolutely no reading, check for continuity on all components and if good - replace ignition control module.

NOTE: Contaminated fuel or combustion air can create a nearly invisible coating on the flame sensor. This coating works as an insulator causing a loss in the flame sense signal. If this situation occurs the flame sensor must be cleaned with steel wool.

DM80HS / DD80HS Pressure Switch Trip Points And Usage Chart			
Model	Set Point on Pressure Fall (PF) W.C.	Max Make Pressure On Rise W.C.	Pressure Switch Part #
DM80HS0403AXAA	- 0.70 ± .06	- 0.85	B1370158
DM80HS0603AXAA	- 0.75 ± .07	- 0.92	B1370179
DM80HS0604BXAA	- 0.75 ± .07	- 0.92	B1370179
DM80HS0803BXAA	- 0.70 ± .06	- 0.85	B1370158
DM80HS0804BXAA	- 0.70 ± .06	- 0.85	B1370158
DM80HS0805CXAA	- 0.75 ± .07	- 0.92	B1370179
DM80HS1005CXAA	- 0.70 ± .06	- 0.85	B1370158
DM80HS1205DXAA	- 0.80 ± .05	- 1.00	0130F00042
DM80HS1405DXAA	- 0.80 ± .05	- 1.00	0130F00042
DD80HS0403AXAA	- 0.60 ± .06	- 0.72	B1370142
DD80HS0603AXAA	- 0.60 ± .06	- 0.72	B1370142
DD80HS0804BXAA	- 0.60 ± .06	- 0.72	B1370142
DD80HS1005CXAA	- 0.80 ± .05	- 1.00	0130F00042

SCHEMATICS

WARNING

HIGH VOLTAGE!
DISCONNECT ALL POWER BEFORE SERVICING OR INSTALLING THIS UNIT. MULTIPLE POWER SOURCES MAY BE PRESENT. FAILURE TO DO SO MAY CAUSE PROPERTY DAMAGE, PERSONAL INJURY OR DEATH.

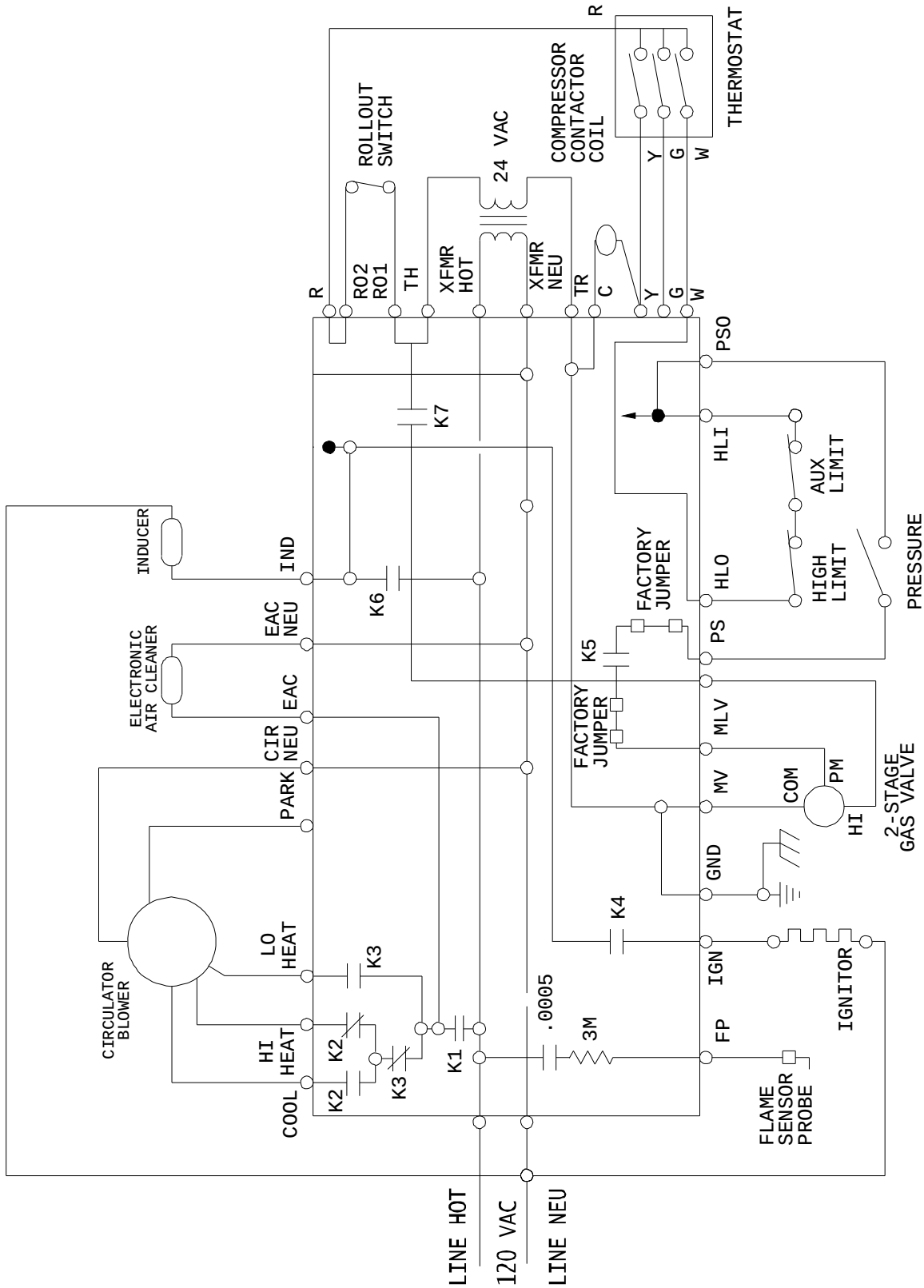

TYPICAL SCHEMATIC
DD80HS/DM80HS___X* MODEL FURNACES
WR 50M56-289 INTEGRATED IGNITION CONTROL

This schematic is for reference only. Not all wiring is as shown above. Refer to the appropriate wiring diagram for the unit being serviced.

This schematic is for reference only. Not all wiring is as shown above. Always refer to the appropriate wiring diagram for the unit being serviced.

WIRING DIAGRAM

White-Rodgers Gas Valve

HIGH VOLTAGE!
DISCONNECT ALL POWER BEFORE SERVICING OR INSTALLING THIS UNIT. MULTIPLE POWER SOURCES MAY BE PRESENT. FAILURE TO DO SO MAY CAUSE PROPERTY DAMAGE, PERSONAL INJURY OR DEATH.

WARNING

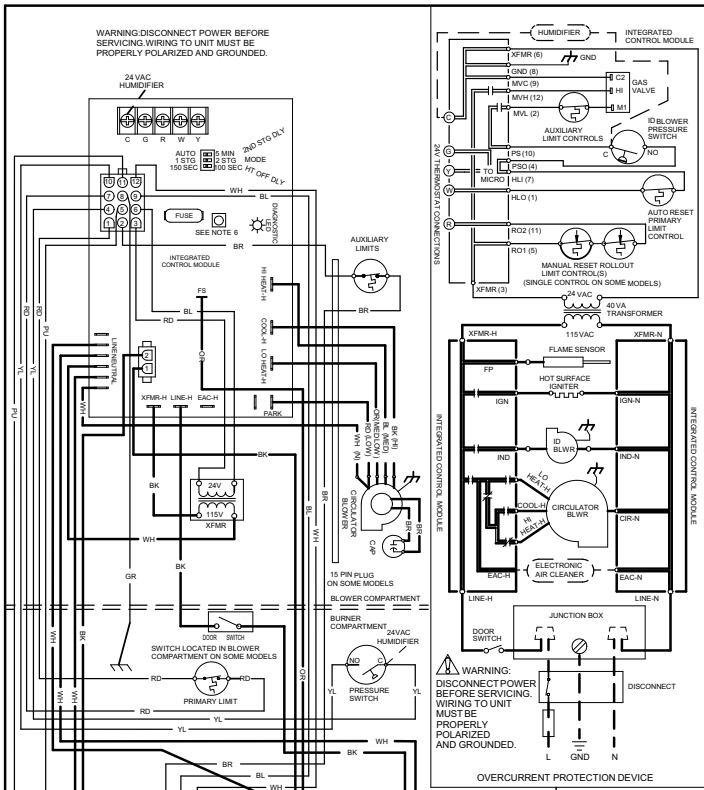

INSTALLER

THIS FURNACE IS CAPABLE OF THE FOLLOWING HEATING MODES

- ⋆ SINGLE STAGE (FACTORY SETTING)
- ⋆ MODIFIED TWO-STAGE
  - ⋆ FIXED 5 MIN LOW STAGE
  - ⋆ AUTO TIME (1-12 MIN) LOW STAGE

TO CHANGE FROM THE FACTORY SINGLE STAGE OPERATION, ADJUST THE DIP SWITCHES ON THE IGNITION CONTROL AS FOLLOWS

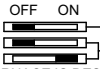

NOTE: THIS FURNACE IS DESIGNED FOR USE WITH A SINGLE STAGE ROOM THERMOSTAT

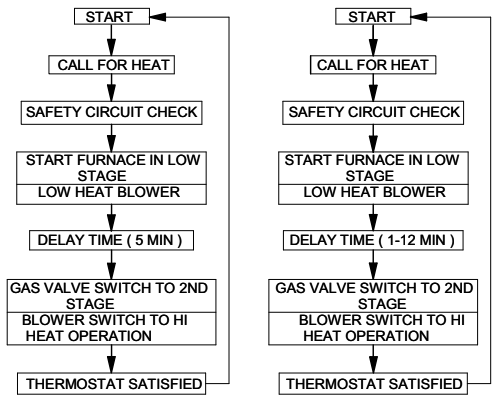

COLOR CODES:

YL	YELLOW	PK	PINK
OR	ORANGE	BR	BROWN
PU	PURPLE	WH	WHITE
GR	GREEN	BL	BLUE
BK	BLACK	GY	GRAY
		RD	RED

This furnace must be installed in accordance with the manufacturer's instructions and local codes. In the absence of local codes, follow the National Fuel Gas Codes. ANSI Z223.1, or CAN/CGA-B149 Installation Codes.

Ce générateur d'air chaud doit être installé conformément aux instructions du fabricant et aux codes locaux. En l'absence de code local, respecter la norme ANSI Z223.1, Intitulé National Fuel Gas Code ou les codes d'installation CAN/CGA-B149.

Minimum Clearance to Combustible Materials in Alcove or Closet installations (in.) Dégagements minimum des matériaux pout une installation en alcôve ou en amoire (en pouces)						
	Sides	Front	Rear	Top	Bottom	Vent
Position	Côtes	Avant	Amère	Haut	Bas	Ventilation
Upflow/Courant ascendant	1	3	0	1	+	1 W/B-1/6 Single wall connector
Counter Flow/Contre-courant	1	3	0	1	#*	1 W/B-1/6 Single wall connector
Horizontal/Horizontale	1	Alcove	0	1	+	1 W/B-1/6 Single wall connector

Line contact only permissible between lines formed by intersections of top and two sides of furnace jacket, and building joists, studs or framing.

Les seuls points de contact admissible se trouvent entre les lignes formées par les intersections du dessus et des deux côtés de l'enveloppe du générateur d'air chaud, et les solivers, les pout res ou la charpente du bâtiment.

1) All positioning is determined as installed unit is view from front.
   Tous les positions sont determinées telles que vues de l'avant de l'appareil installé.
2) Allow 24" minimum service clearance.
   Prévoir un dégagement minimum de 24" pouces pouorles interventions de dépannage.

\+ For installation on combustible flooring.
   Installer sur un plancher combustible.
\# For installation on non combustible flooring only.*
   Installer sur un plancher non combustible seulement.*
* For installation on combustible flooring only when installed on special base Part no.
   Pour les planchers combustibles, n'installer que sur les socle spécial n*.

Part Number Numero De La Piece	Chassis Width Largeur De Chassis
SBT 14	15
SBT 17	17.5
SBT 21	21

For use with natural gas and propane. A conversion kit as supplied by the manufacturer, shall be used to convert this furnace to the alternate fuel.
Pour utilisation avec le gaz naturel et le propane. Une troussede conversion fournie par le fabricant doit être utilisee pour passer d'un combustible a l'autre.

- STEADY ON = NORMAL OPERATION
- OFF = CONTROL FAILURE
- 1 FLASH = SYSTEM LOCKOUT (RETRIES/RECYCLES EXCEEDED)
- 2 FLASHES = PRESSURE SWITCH STUCK CLOSED
- 3 FLASHES = PRESSURE SWITCH STUCK OPEN
- 4 FLASHES = OPEN HIGH LIMIT
- 5 FLASHES = FLAME SENSE WITHOUT GAS VALVE
- 6 FLASHES = OPEN ROLLOUT OR OPEN FUSE
- 7 FLASHES = LOW FLAME SIGNAL
- 8 FLASHES = CHECK IGNITER OR IMPROPER GROUND
- RAPID FLASHES = REVERSED 115 VAC POLARITY/VERIFY GND

- LOW VOLTAGE (24V)
- LOW VOLTAGE FIELD
- HI VOLTAGE (115V)
- HI VOLTAGE FIELD
- JUNCTION
- TERMINAL
- INTERNAL TO INTEGRATED CONTROL
- PLUG CONNECTION

- EQUIPMENT GND
- FIELD GND
- FIELD SPLICE
- SWITCH (TEMP.)
- IGNITER
- SWITCH (PRESS.)
- OVERCURRENT PROT.DEVICE

0140F02427-A

NOTES:

1. SET HEAT ANTICIPATOR ON ROOM THERMOSTAT AT 0.7 AMPS.
2. MANUFACTURER'S SPECIFIED REPLACEMENT PARTS MUST BE USED WHEN SERVICING.
3. IF ANY OF THE ORIGINAL WIRE AS SUPPLIED WITH THE FURNACE MUST BE REPLACED, IT MUST BE REPLACED WITH WIRING MATERIAL HAVING A TEMPERATURE RATING OF AT LEAST 105-C. USE COPPER CONDUCTORS ONLY.
4. BLOWER SPEEDS SHOULD BE ADJUSTED BY INSTALLER TO MATCH THE INSTALLATION REQUIREMENTS SO AS TO PROVIDE THE CORRECT HEATING TEMPERATURE RISE AND THE CORRECT COOLING CFM. (SEE SPECIFICATION SHEET FOR AIR FLOW CHART)
5. UNIT MUST BE PERMANENTLY GROUNDED AND CONFORM TO N.E.C. AND LOCAL CODES.
6. TO RECALL THE LAST 5 FAULTS, MOST RECENT TO LEAST RECENT, DEPRESS SWITCH FOR MORE THAN 2 SECONDS WHILE IN STANDBY(NO THERMOSTAT INPUTS).

Wiring is subject to change. Always refer to the wiring diagram on the unit for the most up-to-date wiring.