Service Instructions

DAIKIN® BRAND DR97MC/DD97MC
97% MODULATING GAS FURNACES WITH VARIABLE-SPEED ECM MOTOR

Pride and workmanship go into every product to provide our customers with quality products. It is possible, however, that during its lifetime a product may require service. Products should be serviced only by a qualified service technician who is familiar with the safety procedures required in the repair and who is equipped with the proper tools, parts, testing instruments and the appropriate service manual. **REVIEW ALL SERVICE INFORMATION IN THE APPROPRIATE SERVICE MANUAL BEFORE BEGINNING REPAIRS.**

WARNING

ONLY PERSONNEL THAT HAVE BEEN TRAINED TO INSTALL, ADJUST, SERVICE, MAINTENANCE OR REPAIR (HEREINAFTER, "SERVICE") THE EQUIPMENT SPECIFIED IN THIS MANUAL SHOULD SERVICE THE EQUIPMENT.

THIS EQUIPMENT IS NOT INTENDED FOR USE BY PERSONS (INCLUDING CHILDREN) WITH REDUCED PHYSICAL, SENSORY OR MENTAL CAPABILITIES, OR LACK OF EXPERIENCE AND KNOWLEDGE, UNLESS THEY HAVE BEEN GIVEN SUPERVISION OR INSTRUCTION CONCERNING USE OF THE APPLIANCE BY A PERSON RESPONSIBLE FOR THEIR SAFETY.

CHILDREN SHOULD BE SUPERVISED TO ENSURE THAT THEY DO NOT PLAY WITH THE EQUIPMENT.

THE MANUFACTURER WILL NOT BE RESPONSIBLE FOR ANY INJURY OR PROPERTY DAMAGE ARISING FROM IMPROPER SUPERVISION, SERVICE OR SERVICE PROCEDURES. IF YOU SERVICE THIS UNIT, YOU ASSUME RESPONSIBILITY FOR ANY INJURY OR PROPERTY DAMAGE WHICH MAY RESULT. IN ADDITION, IN JURISDICTIONS THAT REQUIRE ONE OR MORE LICENSES TO SERVICE THE EQUIPMENT SPECIFIED IN THIS MANUAL, ONLY LICENSED PERSONNEL SHOULD SERVICE THE EQUIPMENT. IMPROPER SUPERVISION, INSTALLATION, ADJUSTMENT, SERVICING, MAINTENANCE OR REPAIR OF THE EQUIPMENT SPECIFIED IN THIS MANUAL, OR ATTEMPTING TO INSTALL, ADJUST, SERVICE OR REPAIR THE EQUIPMENT SPECIFIED IN THIS MANUAL WITHOUT PROPER SUPERVISION OR TRAINING MAY RESULT IN PRODUCT DAMAGE, PROPERTY DAMAGE, PERSONAL INJURY OR DEATH.

WARNING

DO NOT BYPASS SAFETY DEVICES

QUEBEC DISCLOSURE REGARDING AVAILABILITY OF REPLACEMENT PARTS, REPAIR SERVICES AND INFORMATION FOR MAINTENANCE AND REPAIR: Daikin Comfort Technologies Manufacturing, Inc. (Daikin) does not guarantee the availability of (1) replacement parts; (2) repair services; and (3) information necessary to maintain or repair products, within the meaning of section 39.1 of the Consumer Protection Act, CQLR, c P-40.1 and section 79.18 of the Regulation respecting the application of the Consumer Protection Act, CQLR, c P-40.1, r. 3.

AVIS POUR LE QUÉBEC CONCERNANT LA DISPONIBILITÉ DES PIÈCES DE RECHANGE, DES SERVICES DE RÉPARATION ET DES RENSEIGNEMENTS POUR L'ENTRETIEN ET LA RÉPARATION : Daikin Comfort Technologies Manufacturing, Inc. (Daikin) ne garantit pas la disponibilité (1) des pièces de rechange, (2) des services de réparation et (3) des renseignements pour l'entretien et la réparation, au sens de l'article 39.1 de la Loi sur la protection du consommateur, RLRQ c P-40.1 et de l'article 79.18 du Règlement d'application de la Loi sur la protection du consommateur, RLRQ c P-40.1, r 3.

WARNING

THIS FURNACE MAY BE PAIRED WITH A COOLING UNIT THAT USES R-32 REFRIGERANT. IF THE REFRIGERATION UNIT PAIRED WITH THIS FURNACE DOES NOT USE R-32, THE R-32 FUNCTION IN THE FURNACE CONTROL BOARD NEEDS TO BE TURNED OFF. PLEASE SEE THE ELECTRICAL AND THE R-32 SECTIONS FOR MORE DETAILS.
REFRIGERANT SYSTEMS OTHER THAN 410A OR R32 MAY REQUIRE AN ADDITIONAL MITIGATION CONTROL BOARD. REFER TO THE INSTALLATION MANUAL OF THE INDOOR EVAPORATOR COIL TO DETERMINE INSTALLATION REQUIREMENTS FOR THAT SUPPLIER'S REFRIGERANT DETECTION SYSTEM.

RSD6612306r1
February 2026

Amana is a registered trademark of Maytag Corporation or its related companies and is used under license. All rights reserved.
Copyright © 2026 Daikin Comfort Technologies Manufacturing, L.P.

IMPORTANT INFORMATION

TABLE OF CONTENTS

Important Information 2
Product Identificatication 4
System Operation 5
R-32 Information 16
Scheduled Maintenance 21
Servicing 23
Checking Voltage 24
Checking Wiring 24
Checking Thermostat, Wiring 24
Checking Transformer and Control Circuit 25
Checking Duct Static 28
Checking Temperature Rise 28
Checking Primary Limit Control 29
Checking Auxiliary Limit Control 30
Checking Flame Rollout Control 30
Inducer Draft Blower Motor 31
Checking Modulating Gas Valve 31
Checking Main Burners 32
Checking Orifices 32
Checking Gas Pressure 32
Checking Hot Surface 34
Checking For Flashback 35
Checking Pressure Control 35
High Altitude Application (USA) 35
Checking For Delayed Ignition 36
Checking Integrated Ignition Control Boards 36
Checking Flame Sensor 37
Troubleshooting 41
Wiring Diagram 53

RECOGNIZE SAFETY SYMBOLS, WORDS AND LABELS

WARNING

THIS UNIT SHOULD NOT BE CONNECTED TO, OR USED IN CONJUNCTION WITH, ANY DEVICES THAT ARE NOT DESIGN CERTIFIED FOR USE WITH THIS UNIT OR HAVE NOT BEEN TESTED AND APPROVED BY THE MANUFACTURER. SERIOUS PROPERTY DAMAGE OR PERSONAL INJURY, REDUCED UNIT PERFORMANCE AND/OR HAZARDOUS CONDITIONS MAY RESULT FROM THE USE OF DEVICES THAT HAVE NOT BEEN APPROVED OR CERTIFIED BY THE MANUFACTURER.

WARNING

TO PREVENT THE RISK OF PROPERTY DAMAGE, PERSONAL INJURY, OR DEATH. DO NOT STORE COMBUSTIBLE MATERIALS OR USE GASOLINE OR OTHER FLAMMABLE LIQUIDS OR VAPORS IN THE VICINITY OF THIS APPLIANCE.

WARNING

HIGH VOLTAGE

DISCONNECT ALL POWER BEFORE SERVICING OR INSTALLING THIS UNIT. MULTIPLE POWER SOURCES MAY BE PRESENT. FAILURE TO DO SO MAY CAUSE PROPERTY DAMAGE, PERSONAL INJURY OR DEATH.

WARNING

IF THE INFORMATION IN THESE INSTRUCTIONS IS NOT FOLLOWED EXACTLY, A FIRE OR EXPLOSION MAY RESULT CAUSING PROPERTY DAMAGE, PERSONAL INJURY OR LOSS OF LIFE.

- **DO NOT STORE OR USE GASOLINE OR OTHER FLAMMABLE VAPORS AND LIQUIDS IN THE VICINITY OF THIS OR ANY OTHER APPLIANCE.**

- **WHAT TO DO IF YOU SMELL GAS:**
  - **DO NOT TRY TO LIGHT ANY APPLIANCE.**
  - **DO NOT TOUCH ANY ELECTRICAL SWITCH; DO NOT USE ANY PHONE IN YOUR BUILDING.**
  - **IMMEDIATELY CALL YOUR GAS SUPPLIER FROM A NEIGHBOR'S PHONE. FOLLOW THE GAS SUPPLIER'S INSTRUCTIONS.**
  - **IF YOU CANNOT REACH YOUR GAS SUPPLIER, CALL THE FIRE DEPARTMENT.**
- **INSTALLATION AND SERVICE MUST BE PERFORMED BY A QUALIFIED INSTALLER, SERVICE AGENCY OR THE GAS SUPPLIER.**

OUTSIDE THE U.S., **call 1-713-861-2500**.
(Not a technical assistance line for dealers.) Your telephone company will bill you for the call.

IMPORTANT INFORMATION

DANGER
PELIGRO

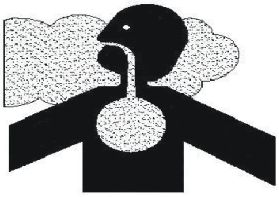

CARBON MONOXIDE POISONING HAZARD

Special Warning for Installation of Furnace or Air Handling Units in Enclosed Areas such as Garages, Utility Rooms or Parking Areas

Carbon monoxide producing devices (such as an automobile, space heater, gas water heater, etc.) should not be operated in enclosed areas such as unventilated garages, utility rooms or parking areas because of the danger of carbon monoxide (CO) poisoning resulting from the exhaust emissions. If a furnace or air handler is installed in an enclosed area such as a garage, utility room or parking area and a carbon monoxide producing device is operated therein, there must be adequate, direct outside ventilation.

This ventilation is necessary to avoid the danger of CO poisoning which can occur if a carbon monoxide producing device continues to operate in the enclosed area. Carbon monoxide emissions can be (re)circulated throughout the structure if the furnace or air handler is operating in any mode.

CO can cause serious illness including permanent brain damage or death.

B10259-216

RIESGO DE INTOXICACIÓN POR MONÓXIDO DE CARBONO

Advertencia especial para la instalación de calentadores ó manejadoras de aire en áreas cerradas como estacionamientos ó cuartos de servicio.

Los equipos ó aparatos que producen monóxido de carbono (tal como automóvil, calentador de gas, calentador de agua por medio de gas, etc) no deben ser operados en áreas cerradas debido al riesgo de envenenamiento por monóxido de carbono (CO) que resulta de las emisiones de gases de combustión. Si el equipo ó aparato se opera en dichas áreas, debe existir una adecuada ventilación directa al exterior.

Esta ventilación es necesaria para evitar el peligro de envenenamiento por CO, que puede ocurrir si un dispositivo que produce monóxido de carbono sigue operando en el lugar cerrado.

Las emisiones de monóxido de carbono pueden circular a través del aparato cuando se opera en cualquier modo.

El monóxido de carbono puede causar enfermedades severas como daño cerebral permanente ó muerte.

B10259-216

RISQUE D'EMPOISONNEMENT AU MONOXYDE DE CARBONE

Avertissement special au sujet de l'installation d'appareils de chauffage ou de traitement d'air dans des endroits clos, tets les garages, les locaux d'entretien et les stationnements.

Evitez de mettre en marche les appareils produisant du monoxyde de carbone (tels que les automobile, les appareils de chauffage autonome,etc.) dans des endroits non ventilés tels que les d'empoisonnement au monoxyde de carbone. Si vous devez faire fonctionner ces appareils dans un endroit clos, assures-vous qu'il y ait une ventilation directe provenant de l'exterier.

Cette ventilation est nécessaire pour éviter le danger d'intoxication au CO pouvant survenir si un appareil produisant du monoxyde de carbone continue de fonctionner au sein de la zone confinée.

Les émissions de monoxyde de carbone peuvent etre recircules dans les endroits clos, si l'appareil de chauffage ou de traitement d'air sont en marche.

Le monoxyde de carbone peut causer des maladies graves telles que des dommages permanents au cerveau et meme la mort.

B10259-216

PRODUCT IDENTIFICATION NOMENCLATURE

D	R	97	M	C	0,6,0	3	B	N	A	A
1	2	3, 4	5	6	7, 8, 9	10	11	12	13	14

Brand

D - Daikin

Configuration

R Upflow/Horizontal
D Downflow/Horizontal

AFUE

80 - 80% AFUE 92 - 92% AFUE
96 - 96 AFUE 97 - 97% AFUE

Gas Valve

M - Modulating
S - Single Stage
T - Two Stage

Motor

C - Variable-Speed ECM / Communicating
N - Multi-Speed ECM (9 taps) / Non-Communicating

MBTU/h

030 - 30,000 BTU/h
040 - 40,000 BTU/h 100 - 100,000 BTU/h
060 - 60,000 BTU/h 120 - 120,000 BTU/h
080 - 80,000 BTU/h 140 - 140,000 BTU/h

Minor Revision

A - Initial Release
B - 1st Revision

Major Revision

A - Initial Release
B - 1st Revision

Nox

N - Natural Gas ≥ 40 NG/J NOx
N - Low NOx (90%+) ≤ 40 NG/J NOx
X - Low NOx (80%) ≤ 40 NG/J NOx
U - Ultra Low NOx ≤ 14 NG/J NOx

Cabinet Width

A - 14"
B - 17.5"
C - 21"
D - 24.5"

Maximum CFM

3 - 1200 CFM
4 - 1600 CFM
5 - 2000 CFM

SYSTEM OPERATION

Control System – General Information

The furnace contains internal logic to control equipment staging. An adjustable target runtime is available (range from 1 to 240 minutes) and set through the appropriate system menu. The system will constantly be adjusting staging in an effort to satisfy the thermostat call for cooling (Y only) or heating (W Only) as close to the set target runtime as possible. See information below for setting options.

Comfort Setting Menu (CFS): There are 6 options available in the Comfort Setting Menu which impacts both the System Target Runtime and Dual Fuel Operation. Dual Fuel operation adjustments only apply if a communicating heat pump is installed Comfort Setting Options 1 – 5 have set values for the System Target Runtime and option 6 enables additional menus to customize all comfort settings. See list below for the System Target Run times associated with the first 5 Comfort Settings. These first 5 options are setup to help satisfy the thermostat slower or faster based on the selection where option 1, with a 10 minute Target Runtime, is attempting to satisfy much faster than option 5, with a 30 minute Target Runtime.

System Target Runtime:
Comfort Setting Option 1) 10 Minute System Target Runtime
Comfort Setting Option 2) 15 Minute System Target Runtime
Comfort Setting Option 3) 20 Minute System Target Runtime
Comfort Setting Option 4) 25 Minute System Target Runtime
Comfort Setting Option 5) 30 Minute System Target Runtime

Dual Fuel Adjustment: This system will automatically determine if the heat pump is capable of satisfying the thermostat in the selected System Target Runtime. If the heat pump is unable to satisfy in the selected time, dual fuel settings will determine how many attempts should be given to the heat pump before temporarily locking it out and using the furnace. These dual fuel settings also determine at what time the system should remove the temporary heat pump lockout and run the heat pump again. There are four adjustable items associated with Dual Fuel control. In the same way as the System Target Time, each of these items have defaulted values for Comfort Settings 1 – 5. Only when Comfort Setting 6 is selected will each item be available for full adjustment.

1. **Stage Up Percent (7 segment menu SUP): This is a value that determines how far past the target runtime the system should continue running the heat pump before transitioning to the furnace. For example, assume this menu was set to 20% with a target runtime of 20 minutes. If the thermostat did not remove the heating call after 20 minutes, the system would allow for an additional 20% heat pump run (20% of the 20 minute target is an additional 4 minutes). In this case, the system would transition to gas heat after 24 minutes if the thermostat call was still present. Each time this occurs, the system records this as a strike against the heat pump (the strike is important when looking at the Over Target Threshold)**
2. **Over Target Threshold (7 segment menu Ott): If the heat pump has consecutively transitioned to gas heat for the selected Over Target Threshold amount of times, meaning for this many consecutive cycles it has been unable to satisfy the target time by itself, then the heat pump will be temporarily locked out and the furnace will become the primary heat source.**
3. **Stage Down Percent (7 segment menu SdP): This only applies when the heat pump is in a temporary lockout condition. In this case, the system will be trying to determine when the best time is to remove the lockout and run the heat pump again. To determine the best time to remove the heat pump lockout the system looks at how easily the furnace is able to satisfy the thermostat using Low Stage Gas Heat Only. Assume this setting is 15% and the target time is 20 minutes. If Low Stage Gas Heat can satisfy the thermostat in less than 17 minutes (20 minutes - 15% = 17 minutes) then the algorithm records a strike against the gas furnace. (this strike is important when looking at the Under Target Threshold).**
4. **Under Target Threshold (7 segment menu Utt): If the furnace is able to satisfy the thermostat using Low Stage Gas Heat Only for the selected number of consecutive cycles the heat pump lockout will be temporarily removed. The heat pump will then be used during the next cycle. If the heat pump can satisfy the thermostat in less than the System Target Runtime the temporary heat pump hold will be completely removed and the heat pump will become the primary heat source again. If it fails to do so, the strike count against the furnace will be reset and the furnace will remain the temporary primary heat source until the Under Target Threshold is reached again.**

SYSTEM OPERATION

The system will automatically make adjustments in an attempt to satisfy the thermostat as close to this target runtime as possible. After a power cycle or mode change (cooling to heating or heating to cooling) the system will run full capacity for the selected mode during the first thermostat call. Based on the selected target runtime and how long the initial cycle takes to satisfy the thermostat, the control algorithm will adjust the system stage times for a 2 stage unit or the capacity demand percentage for an inverter / modulating unit for the next cycle. **NOTE**: actual run times may change depending on variations of load throughout the day.

The following table shows the default values for all Comfort Setting Options (1 – 5)

Comfort Setting Option	Target Time (Minutes)	Stage Up Percentage (%)	Stage Down Percentage (%)	Over Target Threshhold (Strike Count)	Under Target Threshhold (Strike Count)
1	10	20	20	2	10
2	15	20	20	4	8
3	20	20	20	6	6
4	25	20	20	8	4
5	30	20	20	10	2

The following table shows the ranges for each of item when the adjustable Comfort Setting Option 6 is selected. The table shows the minimum value, the maximum value and the defaulted value. All items can be adjusted up or down by increments of 1 which provides full flexibility for all items. Note: it is critical that these numbers be set properly. If Comfort Setting option 3 is desired but a target time of 60 is preferred, select Comfort Setting Option 6 to enable all the adjustable menus, set the Target Time to 60 and make sure the other menus are set to match that of Comfort Setting Option 3.

Menu	Minimum Value	Maximum Value	Default Value
Target Time (t9t)	1 minute	240 minutes	60 minutes
Stage Up Percent (SUP)	0%	100%	20%
Stage Down Percent (SdP)	0%	100%	20%
Over Target Threshold (Ott)	1 strike	254 strikes	20 strikes
Under Target Threshold (Utt)	1 strike	254 strikes	20 strikes

CIRCULATOR BLOWER SPEED

The Airflow quantity is displayed as a number on the three 7 segment displays, rounded to the nearest 100 CFM. The display alternates airflow amount and the system operating status.
Each furnace has a "Maximum CFM" it is capable of providing. All fan operations (Constant CFM, Cooling Airflow Profiles, Low and High Stage gas heat airflow, outdoor Air Conditioner / Heat Pump Airflow, etc.) are based off of multipliers which are percentages of this maximum CFM. Max CFM is as follows:

3 Ton Models 1400 CFM
4 Ton Models 1760 CFM
5 Ton Models 2200 CFM
Setup Furnace Airflow: Adjust the Gas Heating Airflow menu (gAF) setting to the desired percentage of maximum airflow. In most cases the default gas heat airflow will provide a temperature rise near the middle of the acceptable range. High Stage CFM can be calculated by the following equation: CFM = Max CFM * Selected Heating Airflow Percentage.

For Communicating Outdoor Units: Main airflow adjustment is not required. The Outdoor unit will determine the appropriate amount of indoor airflow to request. Airflow Trims can be made if desired.
For Non-Communicating outdoor units, determine the proper airflow (based off tonnage of) the outdoor unit. Most cooling systems are designed to work with airflow between 350 and 450 CFM per ton. 400 CFM/TON is the industry standard. Once desired airflow has been determined, see Tonnage / Airflow table to identify the Tonnage Selection that is closest to the desired airflow. This table is based on 400 CFM per ton where Airflow = (400 CFM) x (Selected Tonnage).

Example: if 1520 CFM is the desired airflow the Tonnage Selection that matches this is 3.8

Enter the Tonnage (ton) menu either by using the on board push buttons or phone application and select the Tonnage Selection you identified. Note: Trim is also available if additional adjustment is required.

Tonnage Selection	Airflow	Tonnage Selection	Airflow	Tonnage Selection	Airflow	Tonnage Selection	Airflow
1	400	2.3	920	3.6	1440	4.9	1960
1.1	440	2.4	960	3.7	1480	5	2000
1.2	480	2.5	1000	3.8	1520	5.1	2040
1.3	520	2.6	1040	3.9	1560	5.2	2080
1.4	560	2.7	1080	4	1600	5.3	2120
1.5	600	2.8	1120	4.1	1640	5.4	2160
1.6	640	2.9	1160	4.2	1680	5.5	2200
1.7	680	3	1200	4.3	1720	5.6	2240
1.8	720	3.1	1240	4.4	1760	5.7	2280
1.9	760	3.2	1280	4.5	1800	5.8	2320
2	800	3.3	1320	4.6	1840	5.9	2360
2.1	840	3.4	1360	4.7	1880	6	2400
2.2	880	3.5	1400	4.8	1920		

COOLING AIRFLOW RAMPING PROFILES

The multi-circulator blower also offers several custom ON/OFF ramping profiles. These profiles may be used to enhance cooling performance and increase comfort level. The ramping profiles are selected using the Cooling Airflow Profile menu (if push buttons are used, use the CAP menu to select the desired profile). Refer to the bullet points below for a description of each ramping profile.

SYSTEM OPERATION

HEATING CFM

MODEL & TEMP RISE RANGE (MID RISE)	*DD97MC0603BNA* 35-65 (50)		*DD97MC0803BNA* 35-65 (50)		*DD97MC0804CNA* 35-65 (50)		*DD97MC1005CNA* 35-65 (50)			
	CFM	RISE	CFM	RISE	CFM	RISE	CFM	RISE		
RECOMMENDED CFM FOR 100% FIRING RATE & EXPECTED TEMPERATURE RISE	1080	50	1400	51	1430	50	1800	50		
LOWEST RECOMMENDED CFM FOR 100% FIRING RATE & EXPECTED TEMPERATURE RISE	830	65	1100	65	1100	65	1380	65		
MODEL & TEMP RISE RANGE (MID RISE)	*DR97MC0603BNA* 25-55 (40)		*DR97MC0603BNA* *25-55 (40)		*DR97MC0804CNA* 25-55 (40)		*DR97MC1005CNA* 35-65 (50)		*DR97MC1205DNA* 35-65 (50)	
	CFM	RISE	CFM	RISE	CFM	RISE	CFM	RISE	CFM	RISE
RECOMMENDED CFM FOR 100% FIRING RATE & EXPECTED TEMPERATURE RISE	1370	40	1400	51	1760	41	1780	50	1950	55
LOWEST RECOMMENDED CFM FOR 100% FIRING RATE & EXPECTED TEMPERATURE RISE	990	55	1200	60	1320	55	1380	65	1670	65

- **Profile A(1)** provides only an OFF delay of one (1) minute at 100% of the cooling demand

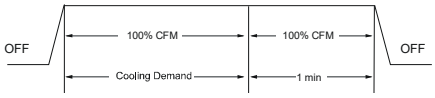

Figure 1

- **Profile B(2)** ramps up to full cooling demand airflow by first stepping up to 50% of the full demand for 30 seconds. The motor then ramps to 100% of the required airflow. A one (1) minute OFF delay at 100% of the cooling airflow is provided.

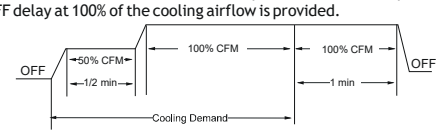

Figure 2

- **Profile C(3)** ramps up to 85% of the full cooling demand airflow and operates there for approximately 7 1/2 minutes. The motor then steps up to the full demand airflow. Profile C also has a one (1) minute 100% OFF delay.

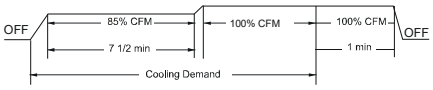

Figure 3

- **Profile D(4 or 5)** ramps up to 50% of the demand for 1/2 minute, then ramps to 85% of the full cooling demand airflow and operates there for approximately 7 1/2 minutes. The motor then steps up to the full demand airflow. Profile D has a 1/2 minute at 50% airflow OFF delay.

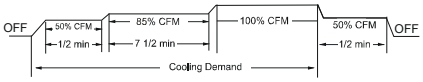

Figure 4

In general lower heating speeds will: reduce electrical consumption, lower operating sound levels of the blower, and increase the outlet air temperature delivered to the home if heat mode is running. If cooling mode is running the same airflow adjustment will decrease the outlet air temperature delivered to the home. The speeds available allow the blower performance to be optimized for the particular homeowner's needs.

LOW VOLTAGE WIRING - GENERAL INFORMATION

The Furnace functions with any thermostat that can be configured to provide 24VAC on Y for cooling calls and 24VAC on W for Heating calls. Based on these simple inputs, internal algorithms will decide how to control two stages of furnace heat in addition to any single or multi stage outdoor heating / cooling operation (the algorithms will handle dual fuel multi-stage systems as well). The thermostat must be setup to provide only a Y call when cooling is required and only a W call when heating is required. This is generally accomplished by selecting single stage heat / single stage cool mode during setup (if setup is required). Do not set thermostat to heat pump operation as system will not operate properly.

NOTE: The only exception is if a single stage non-communicating Heat Pump is connected to the furnace. Refer to Non-Communicating Single Stage Heat Pump diagram for details.

Thermostat connections to the control board are R, C, G, W, Y & Dehum. Provided the thermostat does not require a common wire as few as two thermostat wires may be used for heat only (R and W) or cool only (R and Y) systems. A minimum three thermostat wires may be used for heating and cooling systems (R, W and Y). Refer to thermostat wiring diagrams below for your system configuration.

Low voltage connections can be made through either the right or left side panel of the furnace. Thermostat wiring entrance holes are located in the blower compartment.

SYSTEM OPERATION

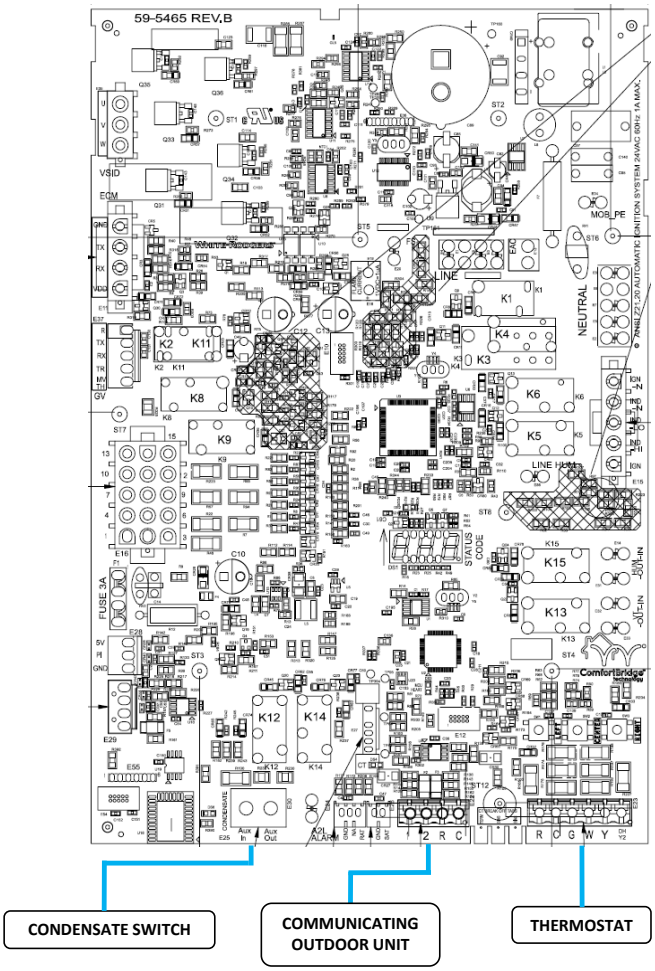

MAIN CONTROL BOARD

For gas heat only operations (no outdoor unit installed) the thermostat must be setup to provide a single stage W call when heating is required. See Gas Heat Only wiring diagram for wiring instructions.

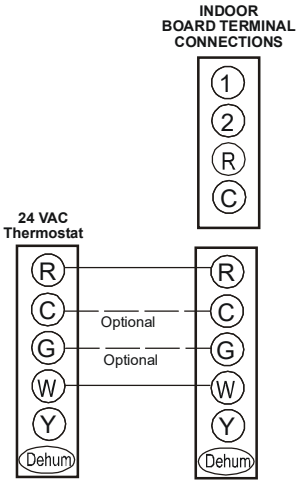

GAS HEAT ONLY

LOW VOLTAGE WIRING - COMMUNICATING OUTDOOR UNIT

Internal logic will control staging of all multi stage equipment (2 stage AC/HP units and Inverter AC/HP units). The thermostat is only required to provide a single stage heat / cool call and fan or dehumidification call during operation.

Two wires are required between the indoor unit and outdoor unit on the 1 and 2 terminals. It is recommended to install a separate transformer with all 2 stage outdoor units to reduce the power draw on the indoor transformer.

4 wires (R,C for power and 1, 2 for communications) can be used for AC applications. See wiring images for details.

Do not connect R & C between the indoor unit and the outdoor unit if there is already a transformer installed in the outdoor unit providing 24VAC to the outdoor control. In this case, just use 1 and 2 terminals for communications.

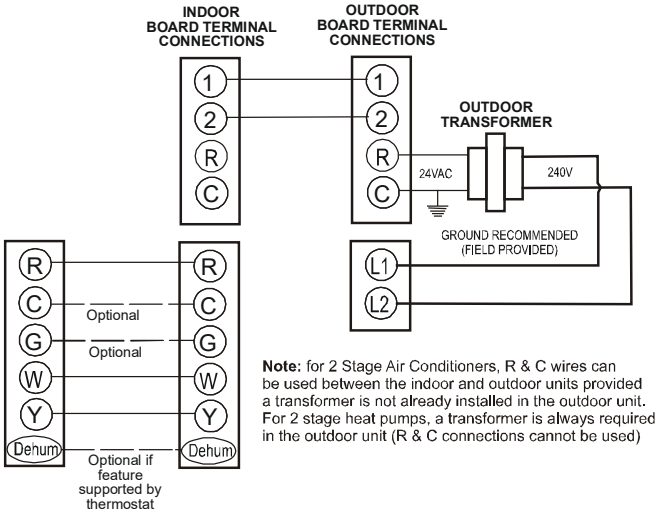

COMMUNICATING TWO STAGE AIR CONDITIONER OR HEAT PUMP

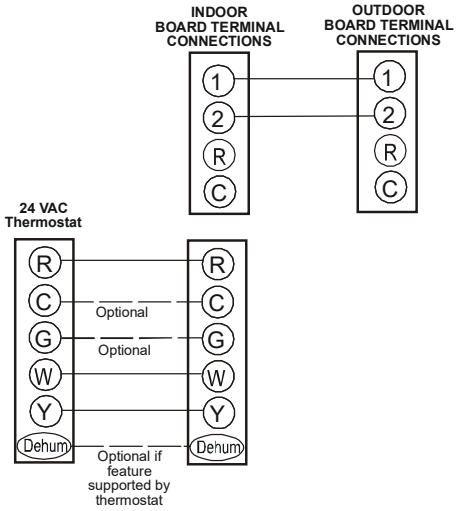

COMMUNICATING INVERTER AIR CONDITIONER OR HEAT PUMP

SYSTEM OPERATION

LOW VOLTAGE WIRING - NON-COMMUNICATING OUTDOOR UNIT

When using the furnace with a single stage non-communicating air conditioner or heat pump use the wiring methods shown. When using a single stage air conditioner, the thermostat must be setup for single stage heating and single stage cooling mode. When using a single stage heat pump, the thermostat must be setup for dual fuel operation where the reversing valve is energized in cooling mode (See Non-Communicating Single Stage Heat Pump wiring diagram). In both cases airflow must be selected using the tonnage menu where Airflow = (400 CFM) x (Selected Tonnage). Tonnage values range from 1 to 6 in 0.1 increments.

NOTE: Airflow will not go above the system Max CFM. If the tonnage value selected generates an airflow value above the Max CFM, the system will cap this value and not provide any more airflow than the Max CFM.

NOTE: When installing a non-communicating outdoor unit without using the Cool Cloud HVAC App, airflow adjustments must be made using the control push buttons. The initial version of the phone application will not be capable of making this setting change with this equipment configuration.

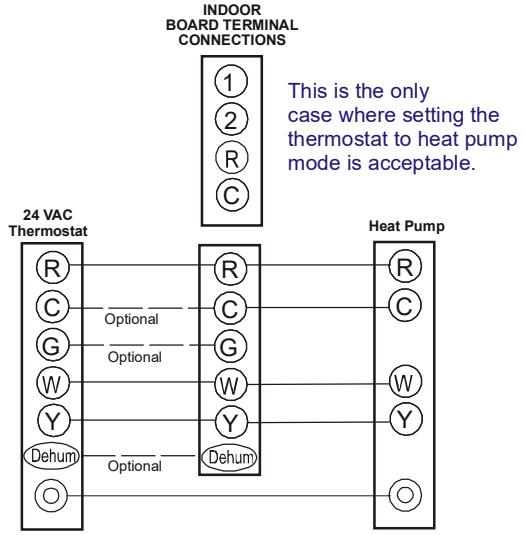

NON-COMMUNICATING SINGLE STAGE HEAT PUMP

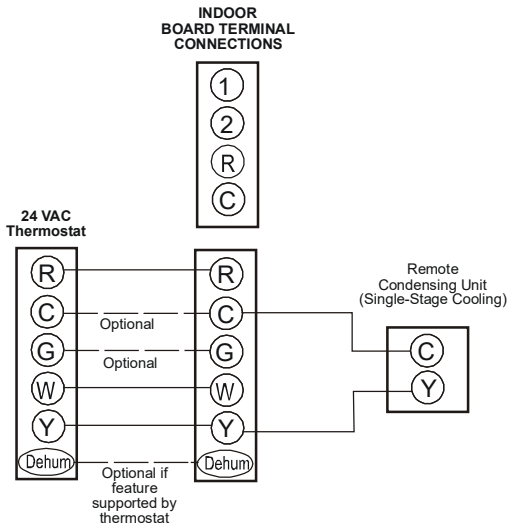

NON-COMMUNICATING SINGLE STAGE A/C

DEHUMIDIFICATION

The control board is equipped with a 24 volt dehum input in the thermostat wiring connector to be used with a thermostat or dehumidistat. Dehumidification mode allows the air handler's circulator blower to operate at a slightly lower speed (85% of calculated speed) during a combined thermostat call for cooling and thermostat call for dehumidification or dehumidistat call for dehumidification. This lower blower speed enhances dehumidification of the conditioned air as it passes through the AC coil. If using the dehum input with a thermostat, configure the thermostat to energize this terminal when dehumidification is desired. If using an external dehumidistat, connect it between the R and Dehum terminals. The dehumidistat must operate on 24 VAC and utilize a switch which *closes on humidity rise.* Refer to the low voltage wiring diagrams for additional wiring details.

Dehumidistat (close on humidity rise)

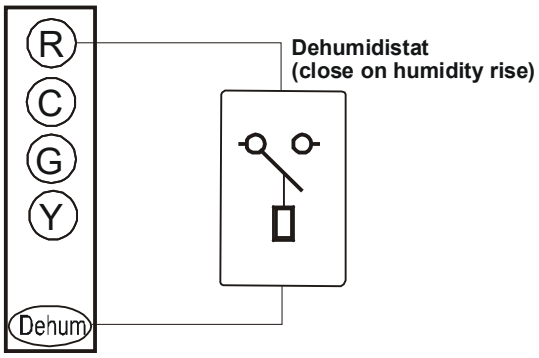

SYSTEM OPERATION

Dehumidification Control Options

Key Mitigations:

1. Full featured TS (dehum & overcool)
2. Connect G and dehum wire correctly
3. Dehumidistat

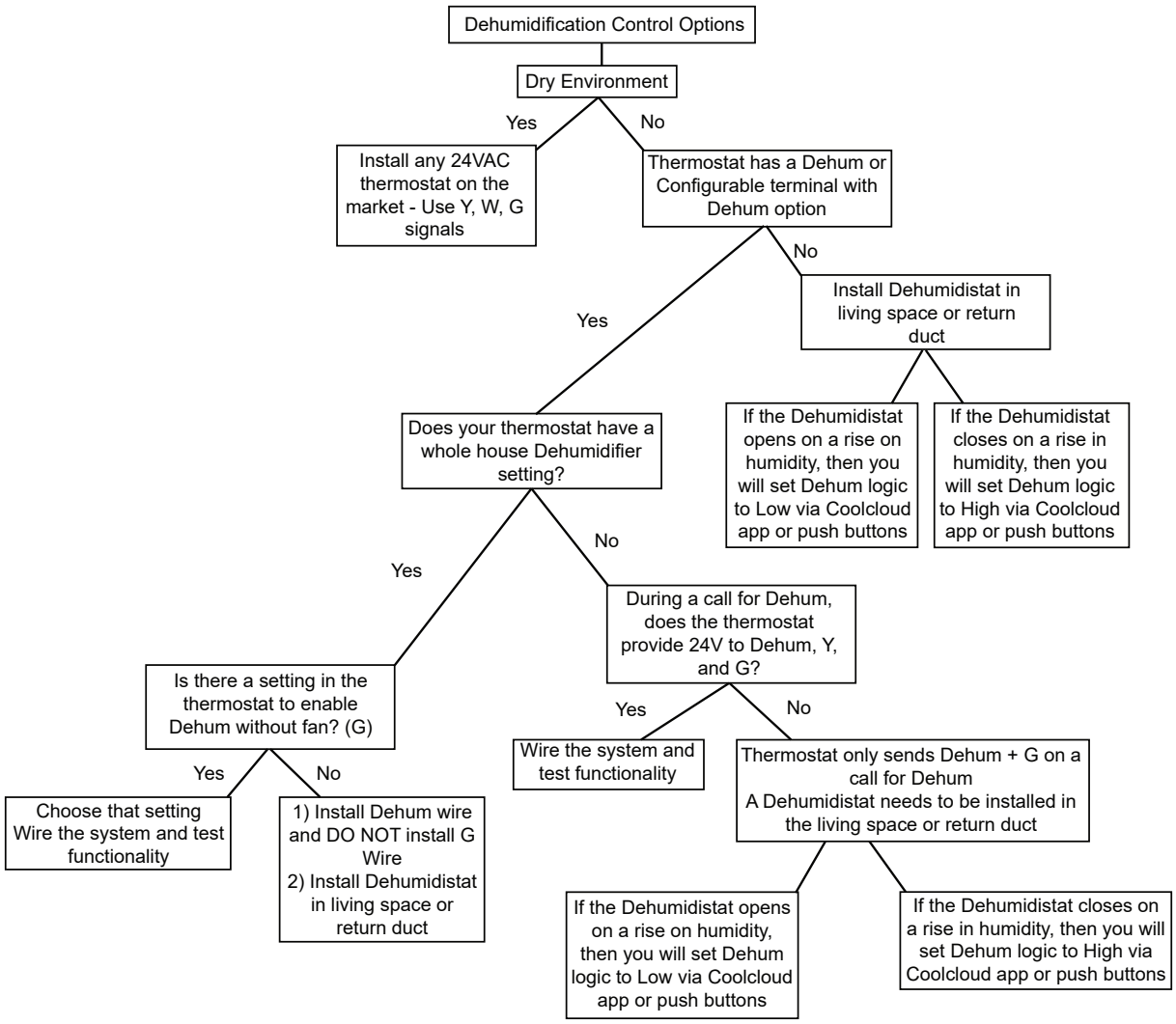

SYSTEM OPERATION

FOSSIL FUEL APPLICATIONS

This furnace can be used in conjunction with a heat pump in a fossil fuel application. A fossil fuel application refers to a combined gas furnace and heat pump installation which uses an outdoor temperature sensor to determine when to run the heat pump or gas furnace.

For non-communicating single stage heat pump installations a fossil fuel kit can be used. Follow the wiring guidelines in the fossil fuel kit installation instructions. All furnace connections must be made to the furnace integrated control module and the "FURNACE" terminal strip on the fossil fuel control board.

For Fossil Fuel systems the heat pump is given priority when a compressor balance point lockout condition is not present. Transitions from primary heat pump heating to backup gas heating will result in full capacity operation during the first thermostat call. The furnace PCB algorithms will then continuously adjust the stage times or the percent capacity after the initial call in an attempt to satisfy the thermostat at the target runtime.

Automatic Fossil Fuel Adjustment: If both compressor balance point and backup heat balance point lockouts are not present, the furnace algorithms will determine if the heat pump is capable of satisfying the thermostat in the selected target runtime. If the heat pump is not capable of this it will be locked out until the furnace can satisfy the thermostat, under the target runtime, while running completely in low stage. At that point, an attempt will be given to the heat pump and a decision made to keep using gas heat or to transition back to the heat pump.

115 VOLT LINE CONNECTION OF ELECTRONIC AIR CLEANER

WARNING

HIGH VOLTAGE !

TO AVOID PERSONAL INJURY OR DEATH DUE TO ELECTRICAL SHOCK, DISCONNECT ELECTRICAL POWER BEFORE SERVICING OR CHANGING ANY ELECTRICAL WIRING.

The accessory load specifications are as follows:

EAC	1.0 Amp maximum at 120 VAC

The furnace integrated control module is equipped with a line voltage accessory terminal for controlling power to an optional field supplied electronic air cleaner or any device required to operate in parallel with a circulating fan demand.

To connect an electronic air cleaner using the line voltage EAC terminal:

- Turn OFF power to the furnace before installing any accessories.
- Follow the air cleaner manufacturers' instructions for locating, mounting, grounding, and controlling accessories. Utilize ¼"quick connect terminals to make accessory wiring connections to the furnace integrated control module.
- Connect the hot terminal utilized for accessory operation to the EAC terminal and the neutral side of power to NEUTRAL bus on the integrated furnace control or the neutral connection in the furnace junction box.
- All field wiring must conform to applicable codes.
- Connections should be made as shown.
- If it is necessary for the installer to supply additional line voltage wiring to the inside of the furnace, the wiring must conform to all local codes, and have a minimum temperature rating of 105°C.
- All line voltage wire splices must be made inside the furnace junction box.

Low Voltage Ventilation

The Ventilation connections provide dry contact for field ventilator wiring connections. These connections are normally open and energize during the R-32 fault/alarm condition. VT IN and VT OUT connections are provided on the control board and are shown in the image below.

Low Voltage A2L Alarm

The A2L alarm connection provides 24VAC for field alarm wiring connections. These connections are normally open and energize during the R-32 fault/alarm condition. An A2L Alarm connection is provided on the control board and is shown in the image below.

Field Installed Accessories

Additional accessories that do not have dedicated terminals on the furnace control board may require an additional daughter board to be installed. Please refer to service manual on your product for more information.

NOTE: This furnace is equipped with a control board that is capable of monitoring for R-32 refrigerant leaks in the indoor refrigeration unit. Please verify that the R-32 sensor wire is plugged in to the furnace control board before startup, if applicable. If furnace is not paired with a R-32 refrigeration system, the default settings in the furnace control board will need to be changed. Please see the R-32 section for additional information.

ACCESSORIES

Optional Field installed Supply Air & Return Air Temperature Sensors

Optional Supply Air Sensor 0130F00933 & Return Air Sensor 0130F00934 are available for purchase from your distributor.

SYSTEM OPERATION

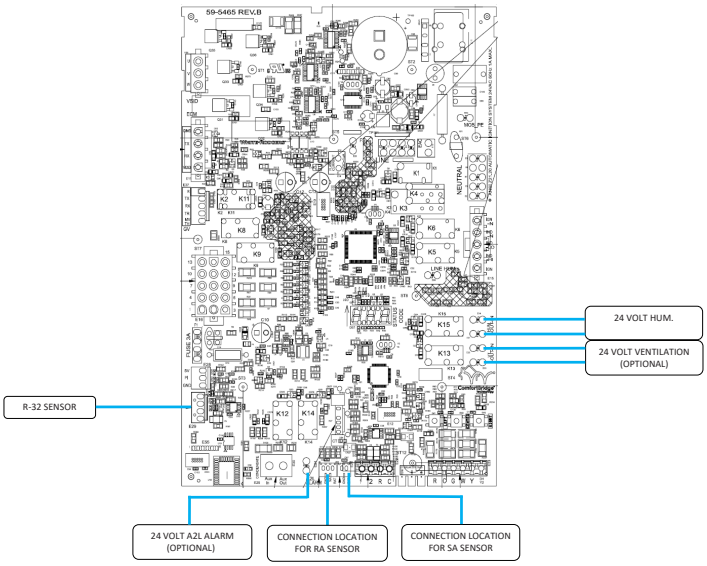

Accessory Control (Ventilators)

If an external humidifier, dehumidifier or ventilator is installed, it may require airflow from the HVAC system to function accordingly.

1. Make sure the installed 24VAC thermostat is capable of controlling the accessory or accessories.
2. Connect the appropriate accessory control wires to the accessory devices from the thermostat (see thermostat manual for connection and setup instructions).
3. If the thermostat is capable of providing a continuous fan call (G signal) during accessory operation: Make sure to connect the thermostat G terminal to the G terminal on the indoor unit. Setup thermostat to ensure G signal is energized during accessory operation.

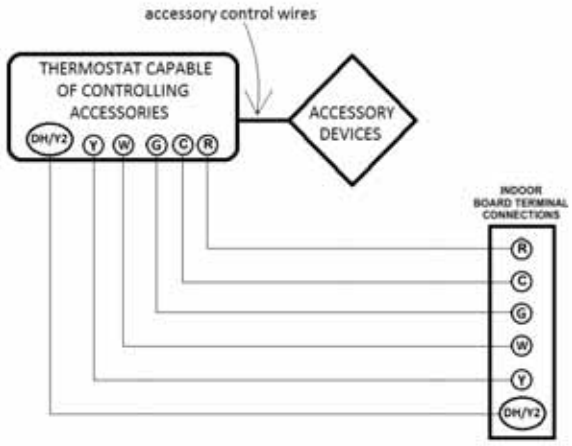

Figure 5

4. Select the appropriate fan only airflow for the accessory using the indoor unit push button menus or the **CoolCloud** HVAC phone application.
5. Using the thermostat, independently test each accessory in addition to independently testing continuous fan mode.

AUXILIARY ALARM SWITCH:

The control is equipped with a 24VAC Aux Alarm to be used for a condensate switch install (designated by "Condensate" on the control). These contacts could also be used with compatible CO_2 sensors or Fire Alarms. By default, an AUX switch is normally closed and opens when the water level in the evaporator coil base pan reaches an undesirable level. The control will respond by turning off the outdoor condensing unit and display EEd. If the AUX switch is detected closed for 30 seconds, normal operation resumes and error messages are no longer displayed.

CoolCloudHVAC Phone Application – General Information

Examples of Cool Cloud HVAC Phone Application Screens
NOTE: Actual screen may look different based on the device being used.

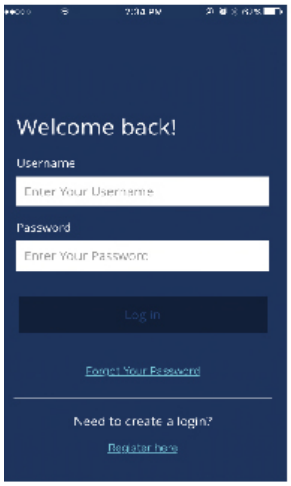

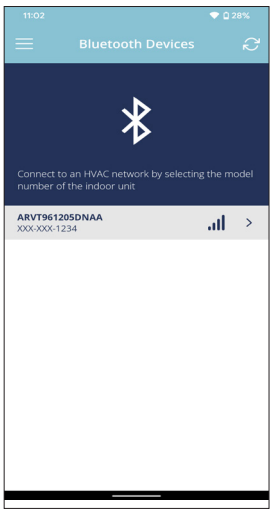

SYSTEM OPERATION

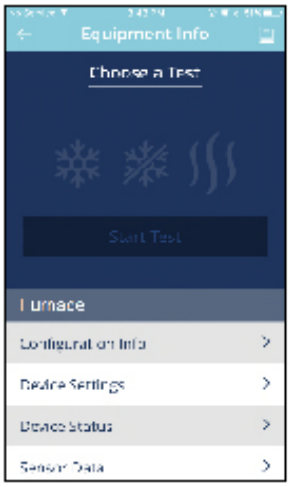

The Bluetooth® word mark and logos are registered trademarks owned by Bluetooth SIG, Inc., and any use of such marks are under license.

This furnace is Bluetooth® ready and functions with a custom phone application designed to improve the setup / diagnostic experience of the installing contractor. Users can see specific model information, review active diagnostic error codes, observe system status during operation, make system menu adjustments such as the target runtime, add site visit notes and run system testing of all operational modes (heat / cool / fan) directly from the phone. The phone application is also capable of directly updating the furnace software anytime updates are available (the application will automatically notify the user if updates are available). Software update time could take approximately 15 minutes to complete. The phone must remain within Bluetooth range for only the download step of an update. The user will be notified once the download is completed and installation begins. At this time the phone can be removed from the Bluetooth range if necessary (NOTE: if the phone is out of range, the user will not know when the installation has completed or what the existing status of the installation is).
Download the CoolCloud Phone Application and create an account to get started. A Wi-Fi / Cellular connection will be required for account setup.

Connecting Phone Application to Furnace

When in close proximity to the furnace, the phone application will detect the Bluetooth Network being broadcasted by the system. Once the Bluetooth network is selected by the user, due to security reasons, the user will be prompted for a 3 digit access code before system information can be displayed. The 3 digit code will be displayed on the three seven segment displays of the furnace control board. A sight glass is located close to the control board that can be used to see these digits. The user must enter the access code into the phone application when prompted to do so in order to gain access to system information. 3 failed entry attempts will result in a new code being displayed on the control. If all 3 digits are not visible from the sight glass, the user has two options to connect.

Option 1) Perform thermostat task as instructed by the phone application to gain access. The following steps will explain what this task involves.

Step 1, ensure the thermostat is in an idle state (no cool, heat or fan calls). To do this, set the thermostat fan mode to Auto (not ON) and then remove any active heat / cool calls. This task needs to be completed within 5 minutes of the process beginning.

Step 2, provide any 24VAC call to the control from the thermostat (cooling, heating or fan will work). This task must occur within 8 minutes after the Step 1 is complete.

Step 3, remove the call that was provided during Step 2. This task must be completed within 1 minute after the call is provided during Step 2.

If the phone remains within Bluetooth range during the three steps, the user will be notified when each step has been completed and informed about what to do next. If the user is not within Bluetooth range during this process the phone application will still provide instruction about what tasks to complete. After all 3 steps have successfully been completed, the user will have access to system information once in range.

Option 2) Remove the furnace door, ensure the control has power and then read the 3 digits. The code will temporarily remain active after a power cycle so the door can put back on before making the connection if desirable. NOTE: power will be cycled to the control board with this option. If it is not desirable to cycle power to the unit for diagnostic purposes Option 1 may be a better method to connect.

At power-up, the furnace control will display the unit address (a two digit number) on the 2nd and 3rd characters of the three seven segment displays. After the furnace control has completed its' internal start-up routine, the furnace control will display the Status Menu.
The control board will display "Id L" while in idle (stand-by) mode waiting for a call from the thermostat. The furnace control is now ready to receive inputs from the room thermostat.
The furnace control board will detect any compatible communicating outdoor unit connected to it. Items that appear in the main menu will vary accordingly. Example, you will not see heat pump specific menus unless a compatible heat pump is detected by the furnace control.

SYSTEM OPERATION

Push Buttons

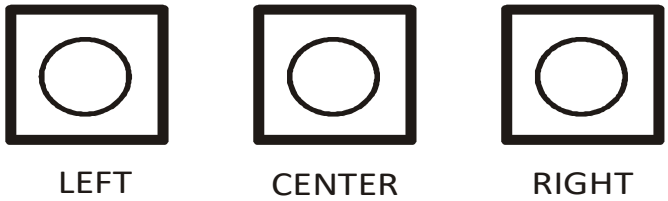

Three push-buttons on the control board may be used to navigate menus and select options. The three buttons are labeled Left, Center and Right. The center button is used to enter into the option menu and make the selection, the left and right buttons are used to browse the main menu and option menus. When the center button is pressed in the main menu, the furnace control will go to the option menu and display the default or previously-selected option. Pressing the left or right button will display the next available option. When the next adjustable or selectable option is displayed, the furnace control will flash the option with ½ second ON and ½ second OFF indicating the option has not yet been selected.
To select an option; press and release the center button to stop the current option from flashing. When the option has stopped flashing, press the center button again to select that option.

While navigating through options; if no buttons are pressed during a 30 second time period, the display will time-out and return to the Status Menu. Simultaneously pressing & releasing any two buttons will also return the furnace control back to the Status Menu. If the previously displayed option was not selected and a timeout occurs, the displayed option will not be stored in control memory as a selected option.
The Status Menu includes the following items;

- The operation mode
- Blower CFM (if blower is running)
- Humidification/Dehumidification mode (if active)
- Ventilator operation (if active)
- Any active fault codes

Menu items will appear in rotation as follows:

- Each item is ON for 2 seconds
- OFF for 1 second
- Then to the next item

Example of Menu Navigation & Option Change

This is an example for how to use the push buttons to make a change to the constant fan speed.

1. When looking at the Furnace Control, the three 7 Segment displays (located just above the push buttons) will be displaying system status. System status includes the current modes of operation, airflow and any active error codes.

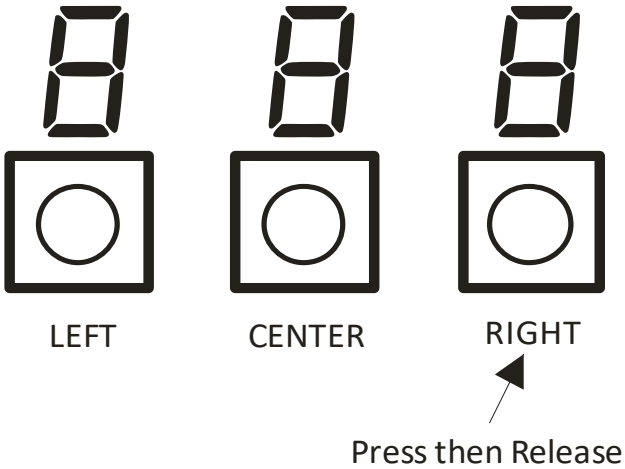

2. Press and release the Right Button (This will cycle through the menus in one direction). Pressing the Left Button would cycle through the menus in the opposite direction.
3. Continue pressing and releasing the Right Button until you see FSd which is the menu for Constant Fan Multiplier.

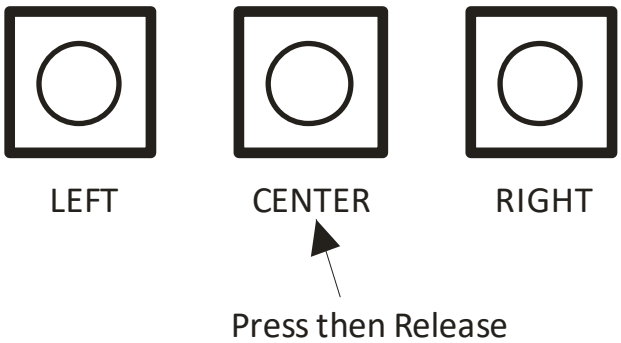

4. Press and release the Center Button. The center button is used to enter menus and make selections within menus.
5. What will be displayed is the currently selected fan only percentage. For this example the assumption is that this currently selected fan only percentage is 25% and changing this to 45% is the objective.
6. Press and Release the Right button. The screen will change to 35 and start flashing. The flashing indicates the displayed option has not been selected yet.
7. Press and Release the Right button again. The 7 segment displays will continue flashing but will now display 45.

SYSTEM OPERATION

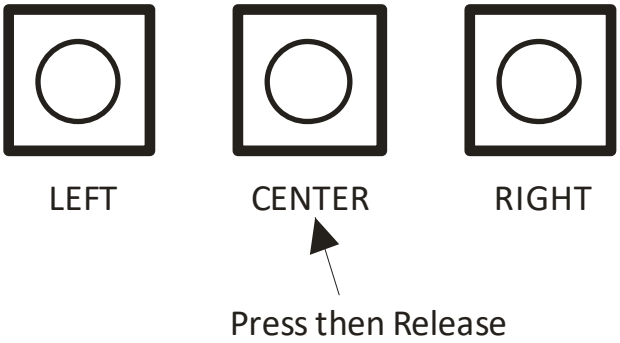

1. **Press and Release the Center Button again. The 45 being displayed will stop flashing. To then complete the selection process and make 45 the official fan only setting Press and Release the Center Button for the last time. This final step will jump the user back to the main menu list and FSd will be displayed again.**
2. **The constant fan multiplier has now been changed from 25 to 45**

Airflow Display

When the blower is running the CFM will be displayed in Status Menu. The first 7 segment character will display "A". The second & third characters will display the actual CFM divided by 100. The actual CFM will display rounded up or down to the nearest 100 CFM as follows;

- **550 to 649 CFM display as** "A06"
- **1150 to 1249 CFM display as** "A12"

Alarm Display

If an active alarm is present, the alarm code shall be reported in Status Menu starting with "E" and following with the appropriate two digit alarm code.

Clearing Faults

While in the Last 10 Faults option menu, push & hold the center button for 5 seconds. This will clear all non-active alarm(s) in the Last 10 Faults menu. The display will flash three times to confirm faults have been cleared.

Learn Menu

Using this option resets the communicating network which will cause the furnace to discover what devices are present on ClimateTalk™ network. This menu will not appear when the furnace control is connected to a Non-Comm OD unit.

Code Release Number Menu

This is a reference only menu to display the firmware release revision numbers for each micro-controller.

Constant Fan Speed Menu

This menu allows for adjustment of the multiplier for constant fan operation in 10% increments. Each furnace has a "Maximum CFM" determined by motor HP. All fan operations are based off of multipliers which are percentages of this number. Max CFM is shown below. The default constant fan multiplier is 30%.

Model	Max CFM
3 Ton Models	1400
4 Ton Models	1760
5 Ton Models	2200
NOTE:*RVM970803 max CFM is 1650	

Gas Heat Airflow Multiplier Menu

The menu is used to change the gas heat airflow multiplier for gas heat operation. In most cases the default gas heat airflow will provide a temperature rise near the middle of the acceptable range. The multiplier will be expressed by the 2nd & 3rd characters of the display as a percentage of max CFM.

Gas Heat Fan Off Delay Menu

The default setting is 90 seconds. The available adjustment range is from 30 to 180 seconds in 30 second increments.

Gas Heat Fan On Delay Menu

The default setting is 30 seconds. The available adjustment range is from 5 to 30 seconds in 5 second increments.

Gas Heat Trim Factor Option Menu

Gas Heat airflow may be trimmed from -10% to +10% in 2% increments.

Gas Heat Stage Multiplier Menu (CFM)

This menu allows adjustment of the low fire CFM multiplier. The default CFM for low fire is 50% of high fire.

Gas Pressure Test Menu

This menu allows 100% firing rate be locked in to check gas valve pressure.

SYSTEM OPERATION

R-32 Information

R-32 Function

This furnace is equipped with a control board that is capable of shutting off the gas heat and turning on the blower fan in case of an R-32 refrigerant leak in the indoor cooling unit. If the cooling unit that is paired with this furnace does not utilize R-32 as the refrigerant, the R-32 functionalities in the furnace control board will need to be turned off for the furnace to run properly.

R-32 function on the control board is ON by default. The R-32 function can be disabled through the furnace control by entering the A2L Function Enabled menu and selecting “no”. If A2L function is disabled, the furnace control will ignore all A2L functions. If A2L function is enabled, the control will monitor the R-32 sensor information.

To enter the A2L Function Enabled menu, press the left or right button until LED displays “A2E”. Press the center button and the LED will display the selected option (yes or no). Press the left or right button to select one of the two options and press the center button to confirm the option.

R-32 Sensor Wire Routing

IMPORTANT NOTE: WIRING ROUTING MUST NOT INTERFERE WITH CIRCULATOR BLOWER OPERATION, FILTER REMOVAL OR ROUTINE MAINTENANCE. WIRE SHOULD NOT BE ROUTED NEAR HOT SURFACES AND SHOULD BE PROTECTED FROM SHARP EDGES. EXTRA PRECAUTION SHOULD BE TAKEN TO AVOID ROUTING NEAR THE OUTLET FLUE PIPE.

The R-32 Sensor wire coming from the indoor refrigeration unit will need to be routed into the furnace and connected to the connection point on the furnace control board. This wire should be routed alongside the thermostat wires through the low voltage openings in the left or right side of the furnace blower compartment. Please see the electrical section for the location of the R-32 Sensor connection on the control board.

Furnace Start Up

During furnace start up, the furnace control will identify the connected R-32 sensor and will start monitoring the sensor communication. A green LED located next to the sensor connection will indicate if there is communication between the furnace control and the R-32 sensor. The LED will be ON during the duration of the startup and then will either start blinking or turn OFF. The blinking LED signifies that communication with the R-32 sensor is present. The LED OFF signifies that there is no signal with the sensor.

If there are no alarms or faults, the furnace will go into regular run mode after a warm up period. The furnace control monitors the R-32 sensor once per second.

R-32 Refrigerant Leak

If the R-32 sensor on the indoor cooling unit detects a specified concentration of R-32 refrigerant, the furnace will enter Mitigation Mode to dilute the refrigerant concentrations in case of a leak. In Mitigation Mode, the furnace will do the following:

1) Display the A2L Refrigerant Leakage error code (EA0)
2) Shut down the gas operation
3) Energize the optional ventilation and alarm outputs.
4) Run the fan at max CFM airflow

Once the R-32 sensor stops detecting a leak, the fan will continue to run for 5 minutes. After the 5 minutes, if there are no other alarms or faults, the control will de-energize the optional ventilation and alarm outputs and then go back to the original operating mode per the thermostat.

A2L Verification

The A2L Function Verification menu allows the installer to verify if the R-32 function operates properly. This menu simulates the refrigerant leak process and is only able to be used when there are no active alarms or faults. To verify the R-32 functions, enter the A2L Function Verification menu and select “YES”. To enter the A2L Function Verification menu, press the left or right button until LED displays “A2u”. Press the center button and the LED will display the selected option (yes or no). Press the left or right button to select one of the two options and press the center button to confirm the option. Once “YES” is selected, the furnace will do the following:

1) Display the A2L Refrigerant Leakage code (EA0)
2) Shut down the gas operation
3) Energize the optional ventilation and alarm outputs.
4) Run the fan at max CFM airflow

The control will exit the verification function if:

1) The 5 minute timeout expires or
2) An alarm or fault is detected or
3) The user turns OFF the A2L Function Verification.

NORMAL SEQUENCE OF OPERATION

POWER UP

The normal power up sequence is as follows:

- 120 VAC power applied to furnace.
- Integrated control module performs internal checks.
- Integrated control module monitors safety circuits continuously.
- Furnace awaits call from thermostat. 7-segment LED’s display LdL while awaiting call from thermostat.

HEATING MODE

NOTE: Upon power up, the gas valve stepper motor may activate to change position. During this event, a slight clicking sound from the stepper motor may be

SYSTEM OPERATION

heard. This clicking sound is inherent to the stepper motor calibration and does not indicate a problem.

The normal operational sequence in heating mode is as follows:

- W thermostat contact closes, initiating a call for heat.
- Integrated control module performs safety circuit checks.
- Induced draft blower is energized on high speed for a 15-second prepurge.
- Induced draft blower steps to low speed following prepurge. Low stage pressure switch contacts are closed. Igniter warm up begins upon Inducer draft blower step to low speed and presence of closed low stage pressure switch contacts.
- Gas valve opens at end of igniter warm up period, delivering gas to burners and establishing flame.
- Low stage gas flow on Modulating product is 50% flow rate.
- Integrated control module monitors flame presence. Gas valve will remain open only if flame is detected.
- Based on the furnace internal control algorithms the gas valve and induced draft blower will modulate to provide the correct gas input needed. After a power cycle, the first gas heat call will result in high stage operation.
- Circulator blower is energized on heat speed following the selected blower on delay and will begin to ramp up. Electronic air cleaner terminal is energized with circulator blower.
- Furnace is now operating on the specified stage determined by the internal control algorithm.
- Furnace runs, integrated control module monitors safety circuits continuously.
- The W terminal thermostat contacts open, which ends the call for heat.
- The gas valve closes, extinguishing the flame.
- Induced draft blower is de-energized following a 15 second post purge.
- Circulator blower continues running for the selected heat off delay period.
- Circulator blower and electronic air cleaner terminal are de-energized.
- Circulator blower shuts off after the heat off delay period expires.
- Furnace awaits next call from thermostat.

OPERATIONAL CHECKS

The burner flames should be inspected with the burner compartment door installed. Flames should be stable, quiet, soft, and blue (dust may cause orange tips but they must not be yellow). Flames should extend directly outward from the burners without curling, floating, or lifting off. Flames must not impinge on the sides of the heat exchanger firing tubes.

SAFETY CIRCUIT DESCRIPTION

A number of safety circuits are employed to ensure safe and proper furnace operation. These circuits serve to control any potential safety hazards and serve as inputs in the monitoring and diagnosis of abnormal function. These circuits are continuously monitored during furnace operation by the integrated control module.

INTEGRATED CONTROL MODULE

The integrated control module is an electronic device which, if a potential safety concern is detected, will take the necessary precautions and provide diagnostic information through an LED.

PRIMARY LIMIT

The primary limit control is located on the partition panel and monitors heat exchanger compartment temperatures. It is a normally-closed (electrically), automatic reset, temperature-activated sensor. The limit guards against overheating as a result of insufficient conditioned air passing over the heat exchanger.

AUXILIARY LIMIT

The auxiliary limit controls are located on or near the circulator blower and monitors blower compartment temperatures. They are a normally-closed (electrically), automatic reset sensors. These limits guard against overheating as a result of insufficient conditioned air passing over the heat exchanger.

ROLLOUT LIMIT

The rollout limit controls are mounted on the burner/manifold assembly and monitor the burner flame. They are normally-closed (electrically), manual-reset sensors. These limits guard against burner flames not being properly drawn into the heat exchanger.

PRESSURE SWITCHES

The pressure switches are normally-open (closed during operation) negative air pressure-activated switches. They monitor the airflow (combustion air and flue products) through the heat exchanger via pressure taps located on the induced draft blower and the coil front cover. These switches guard against insufficient airflow (combustion air and flue products) through the heat exchanger and/or blocked condensate drain conditions.

FLAME SENSOR

The flame sensor is a probe mounted to the burner/manifold assembly which uses the principle of flame rectification to determine the presence or absence of flame.

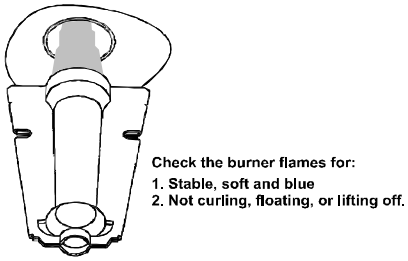

Burner Flame

SYSTEM OPERATION

TROUBLESHOOTING

Electrostatic Discharge (ESD) Precautions

NOTE: Discharge body's static electricity before touching unit. An electrostatic discharge can adversely affect electrical components.
Use the following precautions during furnace installation and servicing to protect the integrated control module from damage. By putting the furnace, the control, and the person at the same electrostatic potential, these steps will help avoid exposing the integrated control module to electrostatic discharge. This procedure is applicable to both installed and uninstalled (ungrounded) furnaces.

1. Disconnect all power to the furnace. Do not touch the integrated control module or any wire connected to the control prior to discharging your body's electrostatic charge to ground.
2. Firmly touch a clean, unpainted, metal surface of the furnace away from the control. Any tools held in a person's hand during grounding will be discharged.
3. Service integrated control module or connecting wiring following the discharge process in step 2. Use caution not to recharge your body with static electricity; (i.e., do not move or shuffle your feet, do not touch ungrounded objects, etc.). If you come in contact with an ungrounded object, repeat step 2 before touching control or wires.
4. Discharge your body to ground before removing a new control from its container. Follow steps 1 through 3 if installing the control on a furnace. Return any old or new controls to their containers before touching any ungrounded object.

DIAGNOSTIC CHART

WARNING

HIGH VOLTAGE !
To avoid personal injury or death due to electrical shock, disconnect electrical power BEFORE performing any service or maintenance.

Refer to the *Troubleshooting Chart* in the back of this manual for assistance in determining the source of unit operational problems. The 7-segment LED displays will display an error code that may contain a letter and number. The error code may be used to assist in troubleshooting the unit.

RESETTING FROM LOCKOUT

Furnace lockout results when a furnace is unable to achieve ignition after three attempts during a single call for heat. It is characterized by a non-functioning furnace and an EE0 code displayed on the 7-segment display. If the furnace is in "lockout", it will (or can be) reset in any of the following ways.

1. Automatic reset. The integrated control module will automatically reset itself and attempt to resume normal operations following a one hour lockout period.
2. Manual power interruption. Interrupt 115 volt power to the furnace.
3. Manual thermostat cycle. Lower the thermostat so that there is no longer a call for heat for 1 -20 seconds then reset to previous setting.

NOTE: If the condition which originally caused the lockout still exists, the control will return to lockout. Refer to the *Troubleshooting Chart* for aid in determining the cause.

MAINTENANCE

ANNUAL INSPECTION

WARNING

To avoid electrical shock, injury or death, disconnect electrical power before performing any maintenance. If you must handle the igniter, handle with care. Touching the igniter element with bare fingers, rough handling or vibration could damage the igniter resulting in premature failure. Only a qualified servicer should ever handle the igniter.

The furnace should be inspected by a qualified installer, or service agency at least once per year. This check should be performed at the beginning of the heating season. This will ensure that all furnace components are in proper working order and that the heating system functions appropriately. Pay particular attention to the following items. Repair or service as necessary.

- Flue pipe system. Check for blockage and/or leakage. Check the outside termination and the connections at and internal to the furnace.
- Heat exchanger. Check for corrosion and/or buildup within the heat exchanger passageways.
- Burners. Check for proper ignition, burner flame, and flame sense.
- Drainage system. Check for blockage and/or leakage. Check hose connections at and internal to furnace.
- Wiring. Check electrical connections for tightness and/or corrosion. Check wires for damage.
- Filters.
- R-32 Sensor Wire. Check R-32 sensor wire connection for tightness and check wire for damage.

SYSTEM OPERATION

FILTERS

FILTER MAINTENANCE

Improper filter maintenance is the most common cause of inadequate heating or cooling performance. Filters should be cleaned (permanent) or replaced (disposable) every two months or as required. When replacing a filter, it must be replaced with a filter of the same type and size.

FILTER REMOVAL

Depending on the installation, differing filter arrangements can be applied. Filters can be installed in either the central return register or a side panel external filter rack (upflow only). A media air filter or electronic air cleaner can be used as an alternate filter. Follow the filter sizes given in the Recommended Minimum Filter size table to ensure proper unit performance.
To remove filters from an external filter rack in an upright upflow installation, follow the directions provided with external filter rack kit.

Horizontal Unit Filter Removal

Filters in horizontal installations are located in the central return register or the ductwork near the furnace.

To remove:

1. Turn OFF electrical power to furnace.
2. Remove filter(s) from the central return register or ductwork.
3. Replace filter(s) by reversing the procedure for removal.
4. Turn ON electrical power to furnace.

Media Air Filter or Electronic Air Cleaner Removal

Follow the manufacturer's directions for service.

BURNERS

Visually inspect the burner flames periodically during the heating season. Turn on the furnace at the thermostat and allow several minutes for flames to stabilize, since any dislodged dust will alter the flames normal appearance. Flames should be stable, quiet, soft, and blue (dust may cause orange tips but they must not be yellow). They should extend directly outward from the burners without curling, floating, or lifting off. Flames must not impinge on the sides of the heat exchanger firing tubes.

INDUCED DRAFT AND CIRCULATOR BLOWERS

CAUTION

To ensure proper unit performance, adhere to the filter sizes given in the recommended Minimum Filter Size Table or Specification Sheet applicable to your model.

The bearings in the induced draft blower and circulator blower motors are permanently lubricated by the manufacturer. No further lubrication is required. Check motor windings for accumulation of dust which may cause overheating. Clean as necessary.

CONDENSATE TRAP AND DRAIN SYSTEM (QUALIFIED SERVICER ONLY)

Annually inspect the drain tubes, drain trap, and field-supplied drain line for proper condensate drainage. Check drain system for hose connection tightness, blockage, and leaks. Clean or repair as necessary.

FLAME SENSOR (QUALIFIED SERVICER ONLY)

Under some conditions, the fuel or air supply can create a nearly invisible coating on the flame sensor. This coating acts as an insulator causing a drop in the flame sense signal. If the flame sense signal drops too low the furnace will not sense flame and will lock out. The flame sensor should be carefully cleaned by a qualified servicer using emery cloth or steel wool. Following cleaning, the flame sense signal should be as indicated in the Specifications Sheet.

BURNERS

WARNING

HIGH VOLTAGE

Electrical components are contained in both compartments. To avoid electrical shock, injury or death, do not remove any internal compartment covers or attempt any adjustment. Contact a qualified service agent at once if an abnormal flame appearance should develop.

Periodically during the heating season make a visual check of the burner flames. Turn the furnace on at the thermostat. Wait a few minutes since any dislodged dust will alter the normal flame appearance. Flames should be stable, quiet, soft and blue with slightly orange tips. They should not be yellow. They should extend directly outward from the burner ports without curling downward, floating or lifting off the ports.

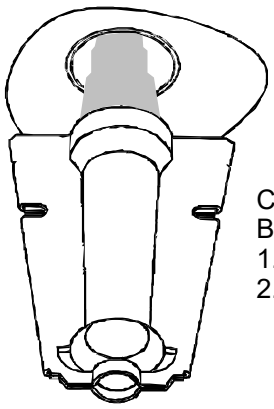

Check the
Burner Flames for:
1. Stable, soft and blue.
2. Not curling, floating or lifting off.

Burner Flame

SYSTEM OPERATION

Proper equipment promotes faster, more efficient service and accurate repairs resulting in fewer call backs.

HEATING PERFORMANCE TEST

Before attempting to diagnose an operating fault, run a heating performance test and apply the results to the *Service Problem Analysis Guide.*

To conduct a heating performance test, the BTU input to the furnace must be calculated.

After the heating cycle has been in operation for at least fifteen minutes and with all other gas appliances turned off, the gas meter should be clocked.

To find the BTU input, multiply the number of cubic feet of gas consumed per hour by the heating value of the gas being used. (The calorific value of the gas being used is found by contacting your local utility.)

FLUE PASSAGES (QUALIFIED SERVICER ONLY)

The heat exchanger flue passageways should be inspected at the beginning of each heating season.

Before Leaving an Installation

- Cycle the furnace with the thermostat at least three times. Verify cooling and fan only operation.
- Review the Owner's Manual with the homeowner and discuss proper furnace operation and maintenance.
- Leave literature packet near furnace.

Repair and Replacement Parts

- When ordering any of the listed functional parts, be sure to provide the furnace model, manufacturing, and serial numbers with the order.
- Although only functional parts are shown in the parts list, all sheet metal parts, doors, etc. may be ordered by description.
- Parts are available from your distributor.

Functional Parts List-

Gas Valve	Blower Motor
Gas Manifold	Blower Wheel
Natural Gas Orifice	Blower Mounting Bracket
Propane Gas Orifice	Blower Cutoff
Igniter	Blower Housing
Flame Sensor	Heat Exchanger with
Rollout Limit Switch	Recuperator Coil
Primary Limit Switch	Coil Front Cover
Auxiliary Limit Switch	Integrated Control Module
Pressure Switch	Transformer
Induced Draft Blower	Bluetooth Module
Door Switch	

SCHEDULED MAINTENANCE

CLOCKING A GAS METER

1. Turn off all gas appliances in the home.
2. Turn on the furnace. Ensure the furnace is operating at 100% firing rate on 2 stage and modulating furnace product.
3. Once heating cycle is at a steady state (typically 15 minutes of operation), use a stopwatch to time how long it takes the smallest unit of measure dial on the gas meter to make a full revolution. In Table 1, one cubic foot is selected. The smallest unit of measure will vary depending on the gas meter.

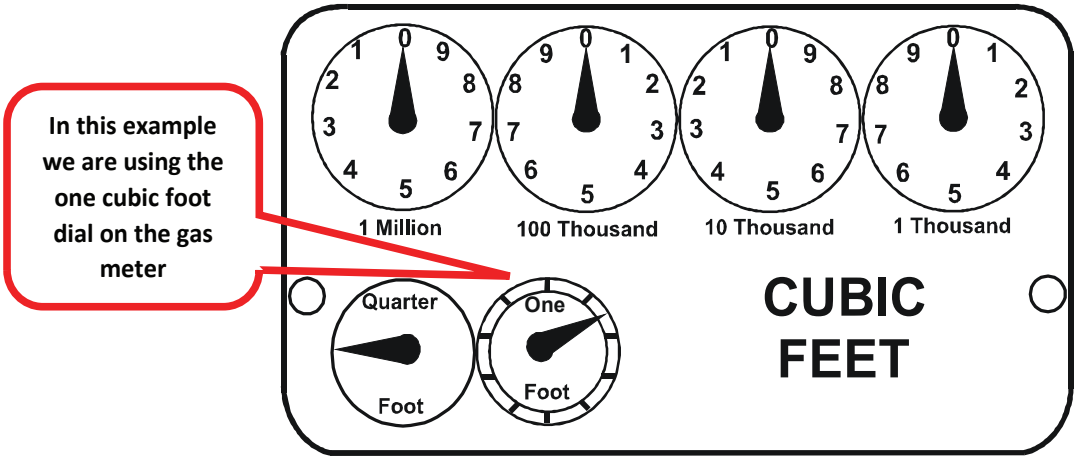

4. Using Table 2 below, find the number of seconds it took for the dial to make a full revolution. To the right of that number of seconds and below the Size of Test Dial (selected in step 3 and shown in Table 1) will be the Cubic Feet per Hour (CFH).

Locate 40 seconds for one revolution in the chart below

Then locate the 1 cu ft dial column and select the corresponding CFH from the 40 seconds for one revolution row

GAS RATE -- CUBIC FEET PER HOUR

Seconds for One Revolution	Size of Test Dial					Seconds for One Revolution	Size of Test Dial				
	1/4 cu/ft	1/2 cu/ft	1 cu/ft	2 cu/ft	5 cu/ft		1/4 cu/ft	1/2 cu/ft	1 cu/ft	2 cu/ft	5 cu/ft
10	90	180	360	720	1800	36	25	50	100	200	500
11	82	164	327	655	1636	37	--	--	97	195	486
12	75	150	300	600	1500	38	23	47	95	189	474
13	69	138	277	555	1385	39	--	--	92	185	462
14	64	129	257	514	1286	40	22	45	90	180	450
15	60	120	240	480	1200	41	--	--		176	439
16	56	113	225	450	1125	42	21	43	86	172	429
17	53	106	212	424	1059	43	--	--	--	167	419
18	50	100	200	400	1000	44	--	41	82	164	409
19	47	95	189	379	947	45	20	40	80	160	400
20	45	90	180	360	900	46	--	--	78	157	391
21	43	86	171	343	857	47	19	38	76	153	383
22	41	82	164	327	818	48	--	--	75	150	375
23	39	78	157	313	783	49	--	--	--	147	367
24	37	75	150	300	750	50	18	36	72	144	360
25	36	72	144	288	720	51	--	--	--	141	355
26	34	69	138	277	692	52	--	--	69	138	346
27	33	67	133	265	667	53	17	34	--	136	340
28	32	64	129	257	643	54	--	--	67	133	333
29	31	62	124	248	621	55	--	--	--	131	327
30	30	60	120	240	600	56	16	32	64	129	321
31	--	--	116	232	581	57	--	--	--	126	316
32	28	56	113	225	563	58	--	31	62	124	310
33	--	--	109	218	545	59	--	--	--	122	305
34	26	53	106	212	529	60	15	30	60	120	300
35	--	--	103	206	514						

*

SCHEDULED MAINTENANCE

5. Use this formula to verify the Cubic Feet per Hour (CFH) input determined in step 4 is correct:

(3600 x Gas Meter Dial Size) / Time (seconds) = Cubic Feet per Hour (CFH)

3600 is used as there are 60 seconds in a minute and 60 minutes in an hour. 60x60=3600

6. Check with your local utility for actual BTU content (caloric value) of natural gas in the area (the average is 1025 BTU's).
7. Use this formula to calculate the BTU/HR input (See BTU/HR Calculation Example):

Cubic Feet per Hour (CFH) x BTU content of your natural gas = BTU/HR input

8. Should the figure you calculated not fall within five (5) percent of the nameplate rating of the unit, adjust the gas valve **pressure regulator.** To adjust the pressure regulator on the gas valve, turn downward (clockwise) to increase pressure and input, and upward (counterclockwise) to decrease pressure and input. A properly operating unit must have the BTU per hour input and CFM of air, within the limits shown to prevent short cycling of the equipment. As the external static pressure goes up, the temperature rise will also increase. Consult the proper tables for temperature rise limitation.

BTU/HR Calculation Example:

The unit being tested takes 40 seconds for the 1 cubic foot dial to make one complete revolution. Using the chart, this translates to 90 cubic feet per hour. Based upon the assumption that one cubic foot of natural gas has 1,025 BTU's (Check with your local utility for actual BTU content), the **calculated input is 92,250 BTU's per hour.**

Furnace Nameplate Input in this example: 90,000 BTU/HR

Calculated Gas Input in this example: 92,250 BTU/HR

This example is within the 5% tolerance input and does not need adjustment.

CAUTION

Always connect a manometer to the outlet tap at the gas valve before adjusting the pressure regulator. In no case should the final manifold pressure vary more than plus or minus .2 inches water column from 3 inches water column for natural gas.

A properly operating unit must have the BTU per hour input and CFM of air, within the limits shown to prevent short cycling of the equipment. As the external static pressure goes up, the temperature rise will also increase. Consult the proper tables for temperature rise limitation.

SERVICING

Some of the electronic boards being used today, with flame rectification, will not function properly and/or at all without polarization of incoming power. Some also require phasing between the primary and secondary sides of step-down transformers.

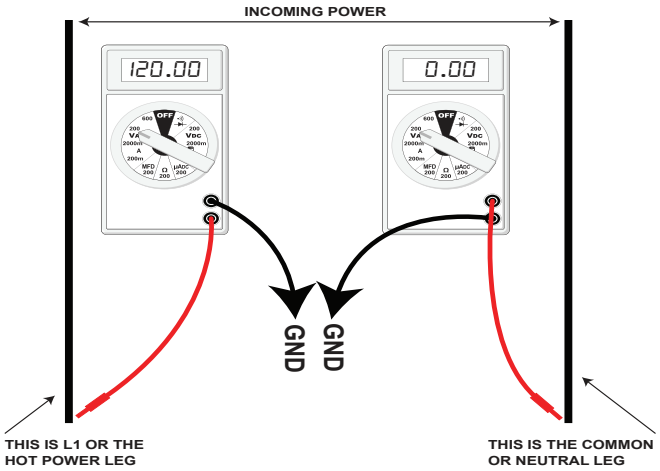

CHECKING FOR PHASING - PRIMARY TO SECONDARY OF UNMARKED TRANSFORMERS*

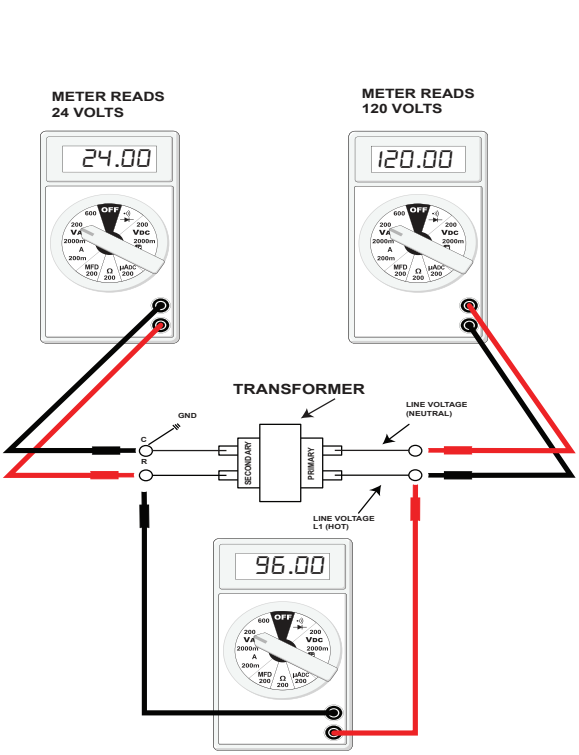

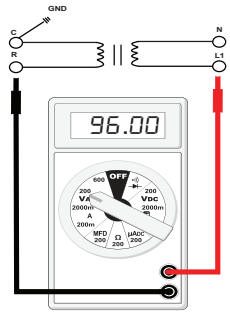

READS 96 VOLTS - IN PHASE

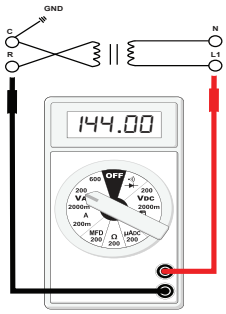

READS 144 VOLTS - OUT OF PHASE

If meter reads approximately 96 volts - the primary to secondary are in phase - if reads approximately 144 volts out of phase - reverse low voltage wires.

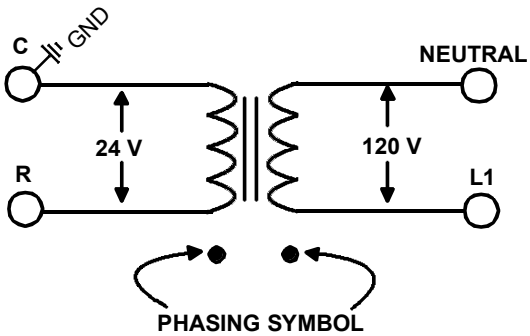

These then should be wired to the furnace accordingly.

Some transformers will display phasing symbols as shown in the illustration to the left to assist in determining proper transformer phasing.

SERVICING

CHECKING VOLTAGE

WARNING

HIGH VOLTAGE
DISCONNECT ALL POWER BEFORE SERVICING OR CHANGING ANY ELECTRICAL WIRING. MULTIPLE POWER SOURCES MAY BE PRESENT. FAILURE TO DO SO MAY CAUSE PROPERTY DAMAGE, PERSONAL INJURY OR DEATH.

1. Remove the burner door.
2. Remove cover from the Junction Box and gain access to incoming power lines.

With Power ON:

WARNING

LINE VOLTAGE NOW PRESENT

3. Using a voltmeter, measure the voltage across the hot and neutral connections.

NOTE: To energize the furnace, the Door Interlock Switch must be engaged at this point.

4. No reading - indicates open wiring, open fuse, no power, or faulty Door Interlock Switch from unit to fused disconnect service. Repair as needed.
5. With ample voltage at line voltage connectors, energize the furnace blower motor by jumpering terminals R to G on the integrated ignition control.
6. With the blower motor in operation, the voltage should be 120 volts ± 10 percent.
7. If the reading falls below the minimum voltage, check the line wire size. Long runs of undersized wire can cause low voltage. If wire size is adequate, notify the local power company of the condition.
8. After completing check and/or repair, replace Junction Box cover and reinstall the service panel doors.
9. Turn on electrical power and verify proper unit operation.

CHECKING WIRING

WARNING

DISCONNECT ALL POWER BEFORE SERVICING.

1. Check wiring visually for signs of overheating, damaged insulation and loose connections.
2. Use an ohmmeter to check continuity of any suspected open wires.
3. If any wires must be replaced, replace with AWM, 105°C. 2/64 inch thick insulation of the same gauge or its equivalent.

CHECKING THERMOSTAT, WIRING

THERMOSTAT AND WIRING

WARNING

DISCONNECT ALL POWER BEFORE SERVICING.

1. Remove the blower compartment door to gain access to the thermostat low voltage wires located at the furnace integrated control module terminals.
2. Remove the thermostat low voltage wires at the furnace control panel terminal board.
3. Jumper terminals R to W on the integrated ignition control. With Power On (and Door Interlock Switch closed):

WARNING

LINE VOLTAGE NOW PRESENT

4. Induced Draft Motor must run and pull in pressure switch.
5. If the hot surface igniter heats and at the end of the igniter warm-up period the gas valve opens and the burners ignite, the trouble is in the thermostat or wiring.
6. With power off, check the continuity of the thermostat and wiring. Repair or replace as necessary.

If checking the furnace in the air conditioning mode, proceed as follows.

7. With power off, Jumper terminals R to Y to G.
8. Turn on the power.
9. If the furnace blower motor starts and the condensing unit runs, then the trouble is in the thermostat or wiring. Repair or replace as necessary.
10. After completing check and/or repair of wiring and check and/or replacement of thermostat, reinstall blower compartment door.
11. Turn on electrical power and verify proper unit operation.

SERVICING

CHECKING TRANSFORMER AND CONTROL CIRCUIT

A step-down transformer 120 volt primary to 24 volt secondary, 40 VA (Heating and Cooling Models) supplies ample capacity of power for either operation.

WARNING

HIGH VOLTAGE

DISCONNECT ALL POWER BEFORE SERVICING OR CHANGING ANY ELECTRICAL WIRING. MULTIPLE POWER SOURCES MAY BE PRESENT. FAILURE TO DO SO MAY CAUSE PROPERTY DAMAGE, PERSONAL INJURY OR DEATH.

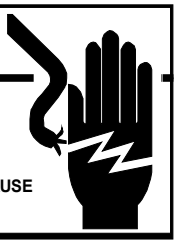

1. Remove blower compartment door to gain access to the thermostat low voltage wires located at the furnace integrated control module.
2. Remove the thermostat low voltage wires at the furnace integrated control module terminals.

With Power On (and Door Interlock Switch closed):

WARNING

LINE VOLTAGE NOW PRESENT

3. Use a voltmeter, check voltage across terminals R and C. Must read 24 VAC.
4. No voltage indicates faulty transformer, open fuse, bad wiring, bad splice, or open door interlock switch.
5. Check transformer primary voltage at incoming line voltage connections, fuse, splices, and blower door interlock switch.
6. If line voltage is available to the primary side of transformer and not at secondary side, the transformer is inoperative. Replace.
7. After completing check and/or replacement of transformer and check and/or repair of control circuit, reinstall blower compartment door.
8. Turn on electrical power and verify proper unit operation.

4-Wire ECM Motors

Description

These models utilize an Nidec US motors, 4-wire variable speed ECM blower motor. The ECM blower motor provides constant CFM.

The motor is a serially communicating variable speed motor. Only four wires are required to control the motor: +Vdc, Common, Receive, and Transmit.

The +Vdc and Common wires provide power to the motor's low voltage control circuits. Typical supply voltage is 9-15 volts DC.

ECM Control Connections

ECM control connections are made through the integrated ignition control. No other control connections are needed.

Checking ECM Motors

ECM motors connect directly to the AC Line Voltage. **DO NOT** insert contactors in series with the ECM Motor AC Line. The control is powered continuously to insure reliable start-up. The connector plug is polarized, verify and reverify correct connector orientation before applying power. **DO NOT** force plug into motor and make sure power is off before inserting power connector. **DO NOT** apply voltage to terminals 1 or 2.

General Checks/Considerations

1. Check power supply to the furnace. Ensure power supply is within the range specified on rating plate.
2. Check motor power harness. Ensure wires are continuous and make good contact when seated in the connectors. Repair or replace as needed.
3. Check motor control harness. Ensure wires are continuous and make good contact when seated in the connectors. Repair or replace as needed.
4. Check thermostat and thermostat wiring. Ensure thermostat is providing proper cooling/heating/continuous fan demands. Repair or replace as needed.
5. Check blower wheel. Confirm wheel is properly seated on motor shaft. Set screw must be on shaft flat and torqued to 165 in-lbs minimum. Confirm wheel has no broken or loose blades. Repair or replace as needed.
6. Ensure motor and wheel turn freely. Check for interference between wheel and housing or wheel and motor. Repair or replace as needed.

7. Check housing for cracks and/or corrosion. Repair or replace as needed.
8. Check motor mounting bracket. Ensure mounting bracket is tightly secured to the housing. Ensure bracket is not cracked or broken.

ULTRACHECK-EZ™ DIAGNOSTIC TOOL

The UltraCheck-EZ™ diagnostic tool is the preferred method (part # UTT-01) to diagnose the ECM motor.

WARNING

HIGH VOLTAGE!
Disconnect ALL power before servicing or installing. Multiple power sources may be present. Failure to do so may cause property damage, personal injury or death.

To use the diagnostic tool, perform the following steps:

1. Disconnect power to the furnace.
2. Disconnect the 4-circuit control harness from the motor.
3. Plug the 4-circuit connector from the diagnostic tool into the motor control connector.
4. Connect one alligator clip from the diagnostic tool to a ground source.
5. Connect the other alligator clip to a 24VAC source.

NOTE: The alligator clips are NOT polarized.

NOTE: The UltraCheck-EZ™ diagnostic tool is equipped with a non-replaceable fuse. Connecting the tool to a source other than 24VAC could damage the tool and cause the fuse to open. Doing so will render the diagnostic tool inoperable.

6. Turn on power to the furnace.

WARNING

Line Voltage now present.

7. Depress the orange power button on the diagnostic tool to send a run signal to the motor. Allow up to 5 seconds for the motor to start.

NOTE: If the orange power button does not illuminate when depressed, the tool either has an open fuse or is not properly connected to a 24VAC source.

8. The green LED on the diagnostic tool will blink indicating communications between the tool and motor. See table below for indications of tool indicators and motor actions. Replace or repair as needed.

Power Button	Green LED	Motor Action	Indication(s)
OFF	OFF	Not Rotating	Confirm 24VAC to UltraCheck-EZ™ tool. If 24VAC is confirmed, diagnostic tool is inoperable.
ON	Blinking	Rotating	Motor and control/end bell are functioning properly.
ON	OFF	Rotating	Replace motor control/end bell.
ON	Blinking	Not Rotating	Check motor (see *Motor Checks* below).
ON	OFF	Not Rotating	Replace motor control/end bell; verify motor (see *Motor Checks* below).

9. Depress the orange power button to turn off motor.
10. Disconnect power. Disconnect diagnostic tool.
11. Reconnect the 4-wire harness from control board to motor.

ELECTRICAL CHECKS - HIGH VOLTAGE POWER CIRCUITS

WARNING

HIGH VOLTAGE!
Disconnect ALL power before servicing or installing. Multiple power sources may be present. Failure to do so may cause property damage, personal injury or death.

1. Disconnect power to the furnace.
2. Disconnect the 5-circuit power connector to the ECM motor.
3. Turn on power to the furnace.

WARNING

Line Voltage now present.

4. Measure voltage between pins 4 and 5 on the 5-circuit connector. Measured voltage should be the same as the supply voltage to the furnace.

SERVICING

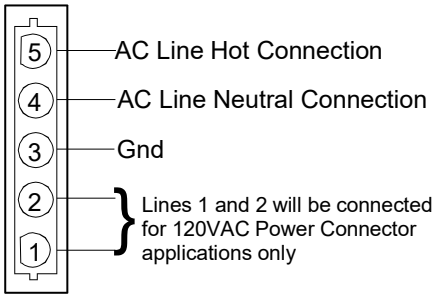

POWER CONNECTOR
"Motor Half"
(Viewed from Plug End)

5. Measure voltage between pins 4 and 3. Voltage should be approximately zero.
6. Measure voltage between pins 5 and 3. Voltage should be the same as the supply voltage to the furnace.
7. If no voltage is present, check supply voltage to the furnace.
8. Disconnect power to the furnace. Reconnect the 5-circuit power harness disconnected in step 2.

ELECTRICAL CHECKS - LOW VOLTAGE CONTROL CIRCUITS

1. Turn on power to the furnace.

WARNING

Line Voltage now present.

2. Check voltage between pins 1 and 4 on the 4-wire motor control harness between the motor and control board. Voltage should be between 3 and 15 VDC.
3. If no voltage is present, check control board.

MOTOR CONTROL/END BELL CHECKS

WARNING

HIGH VOLTAGE!
Disconnect ALL power before servicing or installing. Multiple power sources may be present. Failure to do so may cause property damage, personal injury or death.

1. Disconnect power to the furnace.

NOTE: Motor contains capacitors that can hold a charge for several minutes after disconnecting power. Wait 5 minutes after removing power to allow capacitors to discharge.

2. Disconnect the motor control harness and motor power harness.
3. Remove the blower assembly from the furnace.
4. Remove the (3) screws securing the control/end bell to the motor. Separate the control/end bell. Disconnect the 3-circuit harness from the control/end bell to remove the control/end bell from the motor.
5. Inspect the NTC thermistor inside the control/end bell (see figure below). Replace control/end bell if thermistor is cracked or broken.

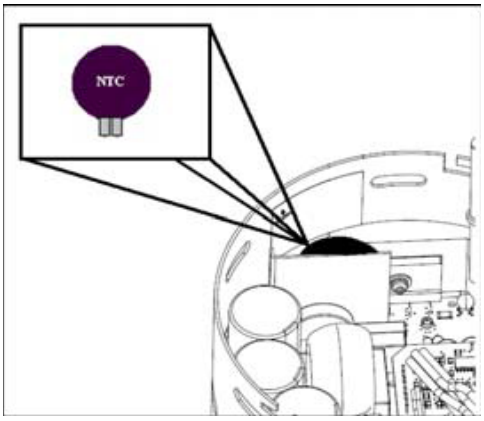

6. Inspect the large capacitors inside the control/end bell (see figure below). Replace the control/end bell if any of the capacitors are bulging or swollen.

SERVICING

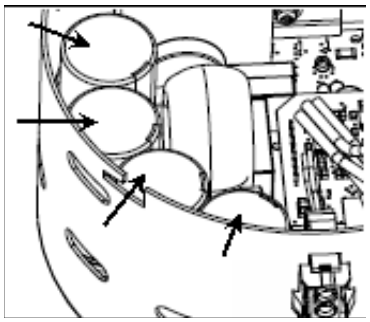

7. Locate the 3-circuit connector in the control/end bell. Using an ohmmeter, check the resistance between each terminal in the connector. If the resistance is 100kΩ or greater, the control/end bell is functioning properly. Replace the control/end bell if the resistance is lower than 100kΩ.
8. Reassemble motor and control/end bell in reverse of disassembly. Replace blower assembly into the furnace.

MOTOR CHECKS

WARNING

HIGH VOLTAGE!
Disconnect ALL power before servicing or installing. Multiple power sources may be present. Failure to do so may cause property damage, personal injury or death.

1. Disconnect power to the furnace.

NOTE: Motor contains capacitors that can hold a charge for several minutes after disconnecting power. Wait 5 minutes after removing power to allow capacitors to discharge.

2. Disassemble motor as described in steps 2 through 4 above.
3. Locate the 3-circuit harness from the motor. Using an ohmmeter, measure the resistance between each motor phase winding. The resistance levels should be equal. Replace the motor if the resistance levels are unequal, open circuited or short circuited.
4. Measure the resistance between each motor phase winding and the motor shell. Replace the motor if any phase winding is short circuited to the motor shell.
5. Reassemble motor and control/end bell in reverse of disassembly. Replace blower assembly into the furnace.

CHECKING DUCT STATIC

The maximum and minimum allowable external static pressures are found in the specification section. These tables also show the amount of air being delivered at a given static by a given motor speed or pulley adjustment.

The furnace motor cannot deliver proper air quantities (CFM) against statics other than those listed.

Too great of an external static pressure will result in insufficient air that can cause excessive temperature rise, resulting in limit tripping, etc. Whereas not enough static may result in motor overloading.

To determine proper air movement, proceed as follows:

1. With clean filters in the furnace, use a manometer to measure the static pressure of the return duct at the inlet of the furnace. (Negative Pressure)
2. Measure the static pressure of the supply duct. (Positive Pressure)
3. Add the two (2) readings together for total external static pressure.

NOTE: Both readings may be taken simultaneously and read directly on the manometer if so desired. If an air conditioner coil or Electronic Air Cleaner is used in conjunction with the furnace, the readings must also include theses components, as shown in the following drawing.

4. Consult proper tables for the quantity of air.

If the total external static pressure exceeds the minimum or maximum allowable statics, check for closed dampers, registers, undersized and/or oversized poorly laid out duct work.

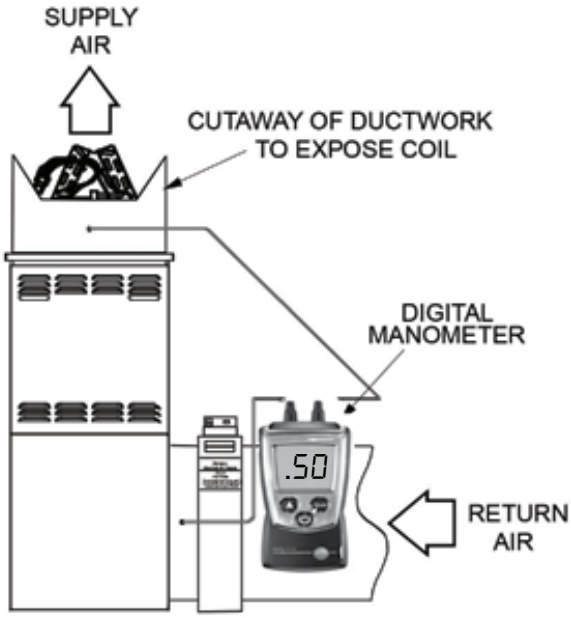

Checking Static Pressure

CHECKING TEMPERATURE RISE

The more air (CFM) being delivered through a given furnace, the less the rise will be; so the less air (CFM) being delivered, the greater the rise. The temperature rise should be adjusted in accordance to a given furnace specifications and its external static pressure. An incorrect temperature rise may result in condensing in or overheating of the heat exchanger. An airflow and temperature rise table is provided in the blower performance specification section. Determine and adjust temperature rise as follows:

SERVICING

1. Operate furnace with burners firing for approximately ten minutes. Check BTU input to furnace - do not exceed input rating stamped on rating plate. Ensure all registers are open and all duct dampers are in their final (fully or partially open) position.
2. Place thermometers in the return and supply ducts as close to the furnace as possible. Thermometers must not be influenced by radiant heat by being able to “see” the heat exchanger.

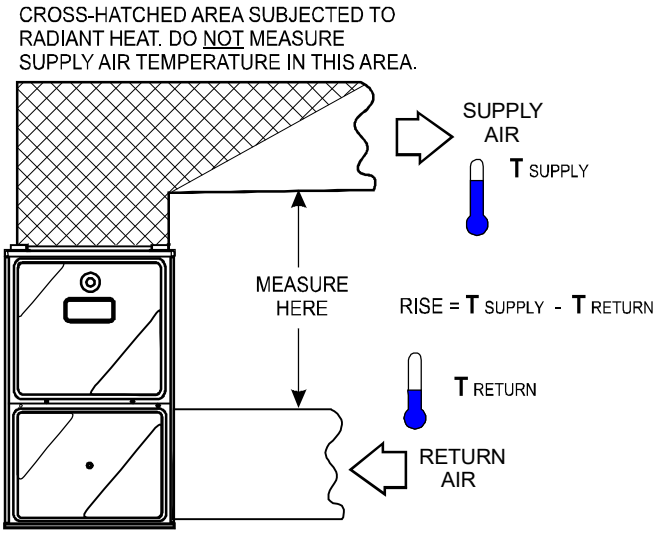

Temperature Rise Measurement

3. Subtract the return air temperature from the supply air temperature to determine the air temperature rise. Allow adequate time for thermometer readings to stabilize.
4. Adjust temperature rise by adjusting the circulator blower speed. Increase blower speed to reduce temperature rise. Decrease blower speed to increase temperature rise. Refer to *Circulator Blower Speed* section in the Product Design section of this manual for speed changing details. Temperature rise is related to the BTUH output of the furnace and the amount of air (CFM) circulated over the heat exchanger. Measure motor current draw to determine that the motor is not overloaded during adjustments.

CHECKING PRIMARY LIMIT CONTROL

Primary limit controls are nonadjustable, automatic reset, bi-metal type limit control. Refer to the following drawing for the location of the primary limit.

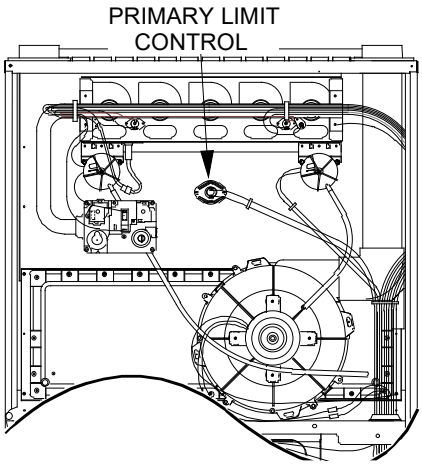

Primary Limit Control Location
(90% Upflow Furnace Shown, Counterflow Similar)

The following drawing illustrates the style of limit switches used on the 90% furnaces.

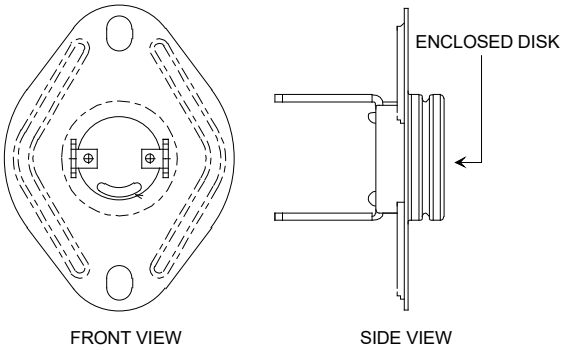

Primary Limit Control Style
(90% Furnaces)

WARNING

HIGH VOLTAGE
Disconnect ALL power before servicing or changing any electrical wiring. Multiple power sources may be present. Failure to do so may cause property damage, personal injury or death.

1. Remove burner compartment door to gain access to the primary limit.
2. Remove low voltage wires at limit control terminals.
3. With an ohmmeter, test between these two terminals as shown in the following drawing. The ohmmeter should read continuous unless heat exchanger temperature is above limit control setting. If not as above, replace the control.

SERVICING

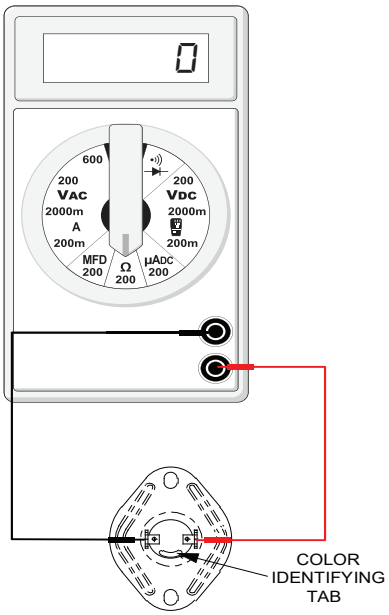

Testing Primary Limit Control (90% Furnaces)

4. After completing check and/or replacement of primary limit control, reinstall burner compartment door.
5. Turn on electrical power and verify proper unit operation.

To aid in identifying these controls, refer to the *Primary Limit Charts* in furnace Technical Manual for part number, temperature setting and color(s) code.

CHECKING AUXILIARY LIMIT CONTROL

Auxiliary limit switches are nonadjustable, automatic reset, bi-metal type limit controls. This control is located in the blower compartment of the furnace and are attached to the blower housing.

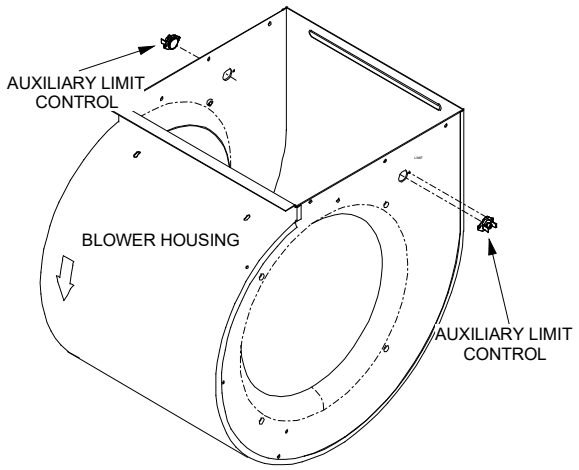

Auxiliary Limit Control Location (Select 90% / 95% Furnaces)

WARNING

HIGH VOLTAGE

DISCONNECT ALL POWER BEFORE SERVICING OR INSTALLING THIS UNIT. MULTIPLE POWER SOURCES MAY BE PRESENT. FAILURE TO DO SO MAY CAUSE PROPERTY DAMAGE, PERSONAL INJURY OR DEATH.

1. Remove blower compartment door to gain access to the auxiliary limits.
2. Remove low voltage wires at limit control terminals.
3. With an ohmmeter, test between these two terminals as shown in the following drawing. The ohmmeter should read continuous unless limit control is open due to excessive heat from the heat exchanger. If the limit does not automatically reset, replace the control.

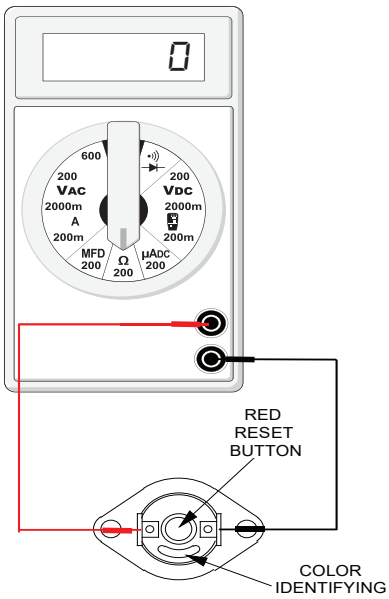

Testing Auxiliary Limit Control

WARNING

TO AVOID POSSIBLE FIRE, ONLY RESET THE AUXILIARY LIMIT CONTROL ONCE. IF IT SHOULD OPEN A SECOND TIME, A QUALIFIED SERVICER MUST DETERMINE WHY THE AUXILIARY LIMIT OPENED BEFORE RESETTING AGAIN.

CHECKING FLAME ROLLOUT CONTROL

A temperature activated manual reset control is mounted to the manifold assembly on 90% furnaces, as shown in the following illustration.

SERVICING

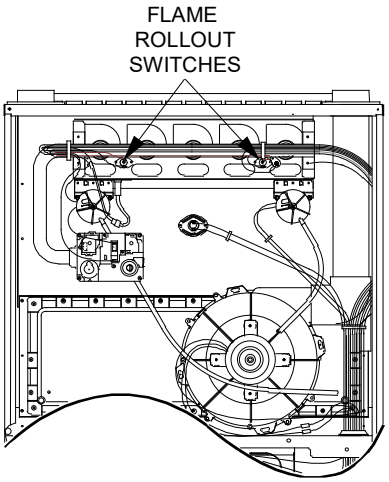

Flame Rollout Switch Location
(90% Upflow Furnace Shown, Counterflow Similar)

The control is designed to open should a flame roll out occur. An over firing condition or flame impingement on the heat shield may also cause the control to open. If the rollout control opens, the air circulation blower will run continuously.

WARNING

LINE VOLTAGE NOW PRESENT

If a rollout switch has tripped, it is important to find out why. Possible causes could be flame impingement, orifice plate out of position, burners with excessive cross-over slot dimension, overfiring, improper orifices, improper gas pressure, air leaking from around the heat exchanger into the burner compartment or air leaking through the heat exchanger itself.

INDUCED DRAFT BLOWER MOTOR

WARNING

HIGH VOLTAGE
DISCONNECT ALL POWER BEFORE SERVICING OR INSTALLING THIS UNIT. MULTIPLE POWER SOURCES MAY BE PRESENT. FAILURE TO DO SO MAY CAUSE PROPERTY DAMAGE, PERSONAL INJURY OR DEATH.

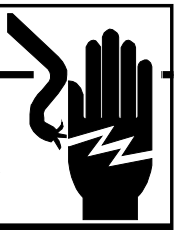

1. Remove burner compartment door to gain access to the induced draft blower motor.
2. Disconnect the motor wire leads from its connection point at the induced draft motor.
3. Using a ohmmeter, test for continuity between each of the motor leads.
4. Touch one probe of the ohmmeter to the motor frame (ground) and the other probe in turn to each lead.

   If the windings do not test continuous or a reading is obtained to ground, replace the motor.
5. If the windings have a continuity reading, reconnect wires. Turn power on to the furnace and turn the thermostat on in the heating mode. Check voltage for 115V at the induced draft motor terminals during the trial for ignition. If you have 115V and the motor does not run, replace the induced draft motor.
6. After completing check and/or replacement of induced draft motor, reinstall burner compartment door.
7. Turn on electrical power and verify proper unit operation.

CHECKING MODULATING GAS VALVE

The gas valve on ComfortBridge™ Modulating Furnace uses a 24VAC electrically stepped valve by White Rodgers. The furnace will fire at 100% firing rate for the first heating cycle. Based on the furnace internal control algorithms the gas valve and induced draft blower will modulate to provide the correct gas input needed. The valve provides control of the main burner gas flow, pressure regulation, and 100 percent safety shut off.

NOTE: Upon power up, the gas valve stepper motor may activate to change position. This actually is a calibration process for the modulating gas valve. During this event a slight clicking sound from the stepper motor may be heard. This clicking sound is inherent to the stepper motor and does not indicate a problem.

The front cover pressure switch is wired in series with Pin 5 on the gas valve (24 volt hot) so if you are not getting voltage to the valve ensure the front cover pressure switch is closed.

Recommend voltage checks on the gas valve:

PIN 5 - TH - MAIN VALVE 24 VAC

PIN 4 - TR - GROUND

PIN 3 - TX - COMMUNICATION TO IFC 3.3 VDC

PIN 2 - RX - COMMUNICATION TO STEPPER 5.0 VDC

PIN 1 - TH - BOARD 24 VAC

SERVICING

WARNING

DISCONNECT ALL POWER BEFORE SERVICING

CHECKING MAIN BURNERS

The main burners are used to provide complete combustion of various fuels in a limited space, and transfer this heat of the burning process to the heat exchanger.

Proper ignition, combustion, and extinction are primarily due to burner design, orifice sizing, gas pressure, primary and secondary air, vent and proper seating of burners.

BURNERS

Burners have been redesigned for 34.5" chassis furnaces. Overall length and width dimensions remain the same as 40" model burners. The burners used 34.5" models have burner head insert with larger diameter center hole and a larger number of surrounding holes.

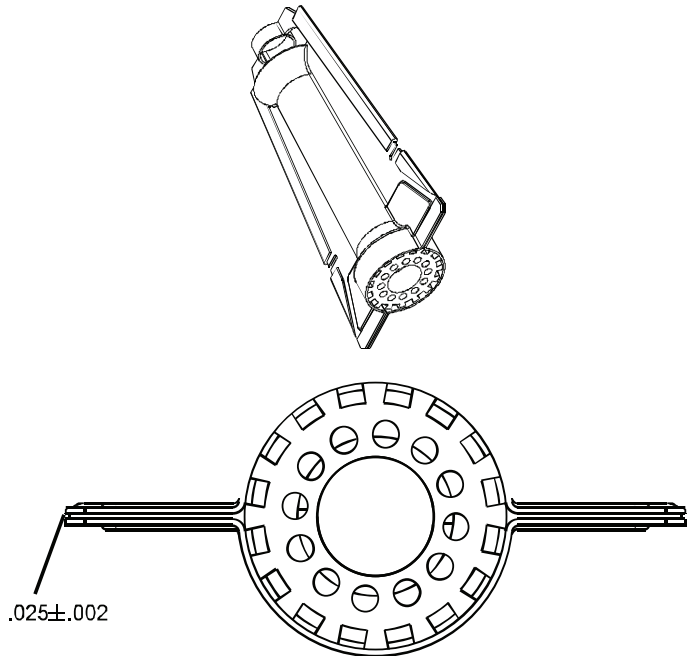

34.5 Burners

WARNING

DISCONNECT ALL GAS AND ELECTRICAL POWER SUPPLY.

In checking main burners, look for signs of rust, oversized and undersized carry over ports restricted with foreign material, etc., burner cross-over slots should not be altered in size.

CHECKING ORIFICES

DR97MC/DD97MC model furnaces have factory installed #45 natural gas orifices.

The only time resizing is required is when a reduction in firing rate is required for an increase in altitude or a furnace is being converted for use with L.P. gas.

Orifices should be treated with care in order to prevent damage. They should be removed and installed with a box-end wrench in order to prevent distortion. In no instance should an orifice be peened over and re-drilled. This will change the angle or deflection of the vacuum effect or entraining of primary air, which will make it difficult to adjust the flame properly. This same problem can occur if an orifice spud of a different length is substituted.

WARNING

DISCONNECT ALL GAS AND ELECTRICAL POWER SUPPLY.

1. Check orifice visually for distortion and/or burrs.
2. Check orifice size by the number stamped on the orifice.

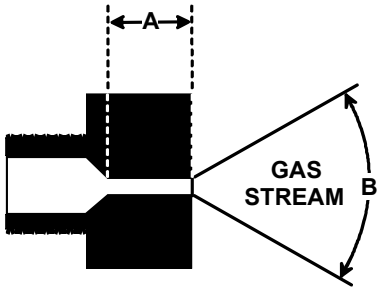

The length of Dimension "A" determines the angle of Gas Stream "B".

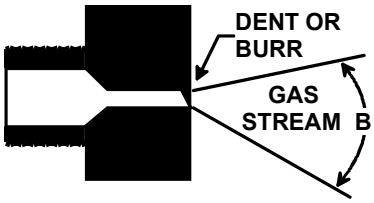

A dent or burr will cause a severe deflection of the gas stream.

CHECKING GAS PRESSURE

GAS SUPPLY PRESSURE MEASUREMENT

CAUTION

TO PREVENT UNRELIABLE OPERATION OR EQUIPMENT DAMAGE, THE INLET GAS SUPPLY PRESSURE MUST BE AS SPECIFIED ON THE UNIT RATING PLATE WITH ALL OTHER HOUSEHOLD GAS FIRED APPLIANCES OPERATING.

Gas inlet and manifold pressures should be checked and adjusted in accordance to the type of fuel being consumed.

The line pressure supplied to the gas valve must be within the range specified below. The supply pressure can be measured at the gas valve inlet pressure tap or at a hose fitting installed in the gas piping drip leg. The supply pressure must be measured with the burners operating. To measure the gas supply pressure, use the following procedure.

SERVICING

WARNING

DISCONNECT ELECTRICAL POWER AND SHUT OFF GAS SUPPLY.

1. After turning off gas to furnace at the manual gas shutoff valve external to the furnace, remove burner compartment door to gain access to the gas valve.
2. Connect a calibrated manometer (or appropriate gas pressure gauge) at either the gas valve inlet pressure tap or the gas piping drip leg as shown in the following figures.

NOTE: At either location, a hose fitting must be installed prior to making the hose connection.

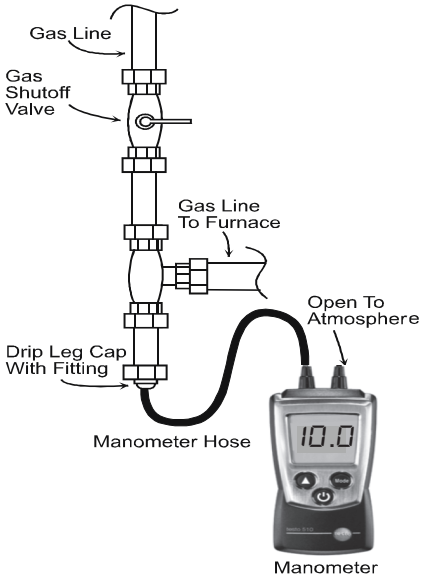

Measuring Inlet Gas Pressure (Alternate Method)

3. Turn ON the gas and electrical power supply and operate the furnace and all other gas consuming appliances on the same gas supply line.
4. Measure furnace gas supply pressure with burners firing. Supply pressure must be within the range specified in the following table.

INLET GAS SUPPLY PRESSURE		
Natural Gas	Minimum: 4.5" w.c.	Maximum: 10.0" w.c.
Propane Gas	Minimum: 11.0" w.c.	Maximum: 13.0" w.c.

If supply pressure differs from above, make necessary adjustments to pressure regulator, gas piping size, etc., and/or consult with local gas utility.

WARNING

HIGH VOLTAGE
DISCONNECT **ALL** ELECTRICAL POWER AND SHUT OFF GAS SUPPLY BEFORE SERVICING OR INSTALLING THIS UNIT. MULTIPLE POWER SOURCES MAY BE PRESENT. FAILURE TO DO SO MAY CAUSE PROPERTY DAMAGE, PERSONAL INJURY OR DEATH.

5. Disconnect manometer after turning off gas at manual shutoff valve. Reinstall plug before turning on gas to furnace.
6. Turn OFF any unnecessary gas appliances started in step 3.
7. Turn on gas to furnace and check for leaks. If leaks are found, repair and then reinstall burner compartment door.
8. Turn on electrical power and verify proper unit operation.

WARNING

HIGH VOLTAGE
DISCONNECT **ALL** ELECTRICAL POWER AND SHUT OFF GAS SUPPLY BEFORE SERVICING OR INSTALLING THIS UNIT. MULTIPLE POWER SOURCES MAY BE PRESENT. FAILURE TO DO SO MAY CAUSE PROPERTY DAMAGE, PERSONAL INJURY OR DEATH.

Gas Manifold Pressure Measurement and Adjustment
Natural Gas Adjustments

WARNING

HIGH VOLTAGE
DISCONNECT **ALL** ELECTRICAL POWER AND SHUT OFF GAS SUPPLY BEFORE SERVICING OR INSTALLING.

NOTE: Follow this procedure to test the gas valve pressure at 100% firing rate.

Only small variations in gas pressure should be made by adjusting the gas valve pressure regulator. The manifold pressure must be measured with the burners operating. To measure and adjust the manifold pressure, use the following procedure.

1. After turning off gas to furnace at the manual gas shutoff valve external to the furnace, remove burner compartment door to gain access to the gas valve.
2. Connect a calibrated manometer (or appropriate gas pressure gauge) at the gas valve outlet pressure tap.

WARNING

LINE VOLTAGE NOW PRESENT

3. Turn ON the gas and electrical power supply and operate the furnace.
4. White-Rodgers 36J27 Valves:
   a. Remove 1/8” N.P.T. plug using 5/16” Allen wrench & connect proper adapter for manometer connection.
   b. Attach a hose and manometer to the outlet pressure tap.
   c. Turn ON the gas supply.
   d. Turn on power and close thermostat “R” and “W1” contacts to provide a call for low stage heat.
   e. Measure the gas manifold pressure with burners firing. Adjust manifold pressure.

SERVICING

f. Use the modulation adjustment screw on the gas valve and turn clockwise one click using a pocket screwdriver to increase gas flow. Allow the gas flow to adjust approximately 15 seconds before moving the adjustment screw again. Turn the modulation adjustment screw counterclockwise with a pocket screwdriver to decrease gas flow if this adjustment is needed. Allow the gas flow to adjust approximately 15 seconds before moving the adjustment screw again. These changes should only be done to fine tune the gas flow.

g. Turn off all electrical power and gas supply to the system.

h. Remove the manometer hose and adapter from gas valve.

i. Install 1/8” N.P.T. plug using 5/16” Allen wrench.

j. Turn on electrical and gas supply to the furnace.

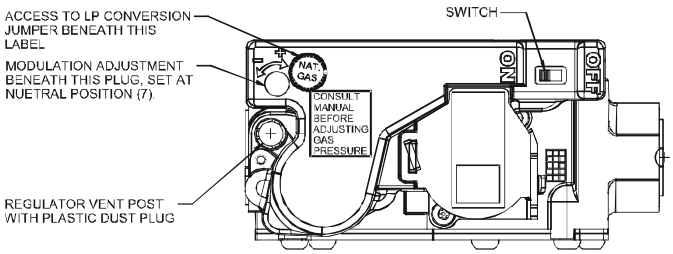

Measuring Manifold Gas Pressure
(36J27 Valve)

WARNING

HIGH VOLTAGE
Disconnect ALL electrical power and shut off gas supply before servicing or installing.

WARNING

HIGH VOLTAGE
Disconnect ALL electrical power and shut off gas supply before servicing or installing this unit.
Multiple power sources may be present. Failure to do so may cause property damage, personal injury or death.

WARNING

HIGH VOLTAGE
Disconnect ALL electrical power and shut off gas supply before servicing or installing.

Manifold Gas Pressure			
Gas Type	**Gas Input**	**Nominal**	**Range**
Natural	50%	.9" w.c.	.6"w.c. - 3.8"w.c.
	100%	3.5" w.c.	
Propane	50%	2.5" w.c.	2.2"w.c. - 10.3"w.c.
	100%	10.0" w.c.	

CHECKING HOT SURFACE IGNITER

120V Silicon Nitride Igniter - Daikin® Brand DR97MC and DD97MC furnaces use a 120V silicon nitride igniter for ignition. The normal operating temperature is approximately 2156°F - 2678°F.

WARNING

Disconnect ALL power before servicing.

1. Remove burner compartment door to gain access to the igniter.
2. Igniter cool - approximately 70 - 77°F.
3. Disconnect the igniter from the Ignition Control.
4. Using an ohmmeter measure the resistance of the igniter:
   120 Volt Silicon Nitride: 120V Nitride Igniter should read between 37 to 68 ohms.
5. Reconnect igniter.

WARNING

Line voltage now present

6. Place unit in heating cycle, measure current draw of igniter during preheat cycle.
   The steady state current at 120V is 0.37 to 0.68 amps.
7. After checking and/or replacing of hot surface igniter, reinstall burner compartment door and verify proper unit operation.

SERVICING

CHECKING FOR FLASHBACK

Flashback will also cause burning in the burner venturi, but is caused by the burning speed being greater than the gas-air flow velocity coming from a burner port.

Flashback may occur at the moment of ignition, after a burner heats up or when the burner turns off. The latter is known as extinction pop.

Since the end results of flashback and delayed ignition can be the same (burning in the burner venturi) a definite attempt should be made to determine which has occurred.

If flashback should occur, check for the following:

1. Improper gas pressure - adjust to proper pressure
2. Check burner for proper alignment and/or replace burner.
3. Improper orifice size - check orifice for obstruction.

CHECKING PRESSURE CONTROL

The pressure control is a safety device to prevent the combustion cycle from occurring with inadequate venting caused by a restricted or blocked vent pipe. In addition to the high fire and low fire pressure switches, DR97MC and DD97MC model furnaces have a "front cover pressure switch" wired in series with the gas valve. This pressure switch keeps the gas valve from opening in the event of condensate backing up in the secondary heat exchanger. This could occur from improperly connected drains or a plugged drain tube.

⚠ WARNING

HIGH VOLTAGE

DISCONNECT ALL POWER BEFORE SERVICING OR INSTALLING THIS UNIT. MULTIPLE POWER SOURCES MAY BE PRESENT. FAILURE TO DO SO MAY CAUSE PROPERTY DAMAGE, PERSONAL INJURY OR DEATH.

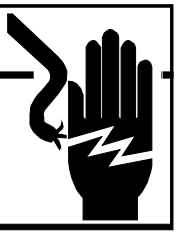

1. Remove burner compartment door to gain access to pressure switch(es).
2. Remove wires from the pressure switch(es) electrical terminals.
3. Remove the pressure control hose from the control and interconnect with an manometer as shown in the following figure.
4. With an ohm meter connected across the pressure switch terminals and with the inducer running, the switch should close and the ohm meter should show a complete circuit across the pressure switch. If the switch is not closed, compare the negative pressure to the closing point specified for the particular switch. Either the switch is defective or the inducer/venting system is inadequate.

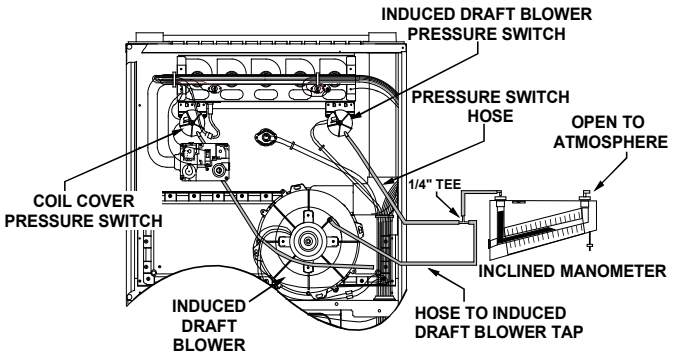

Blower Pressure Switch
Negative Pressure Measurement
(90% Upflow Furnace Shown, Counterflow Similar)

HIGH ALTITUDE APPLICATION (USA)

When furnaces are installed at high altitude, the appropriate High Altitude Orifice or Pressure Switch Kit must be applied. This is required due to the natural reduction in the density of both the gas fuel and combustion air as altitude increases. The High Altitude Orifice Kit will provide the proper design certified input rate within the specified altitude range.

High Altitude Orifice or Pressure Switch Kits are purchased according to the installation altitude and usage of either natural or propane gas. Refer to the Technical Manual or product Specification Sheet for a tabular listing of appropriate altitude ranges and corresponding manufacturer's high altitude (Natural or Propane Gas) orifice or pressure switch kits.

Do **not** derate the furnace by adjusting the manifold pressure to a lower pressure than specified on the furnace rating plate. The combination of the lower air density and a lower manifold pressure will prohibit the burner orifice from drawing the proper amount of air into the burner. This may cause incomplete combustion, flashback, and possible yellow tipping.

In some areas the gas supplier may artificially derate the gas in an effort to compensate for the effects of altitude. If the gas is artificially derated the appropriate orifice size must be determined based on the BTU/ft^3 content of the derated gas and the altitude. Refer to the National Fuel Gas Code, NFPA 54/ANSI Z223.1, and information provided by the gas supplier to determine the proper orifice size.

SERVICING

CHECKING FOR DELAYED IGNITION

Delayed ignition is a delay in lighting a combustible mixture of gas and air which has accumulated in the combustion chamber.

When the mixture does ignite, it may explode and/or rollout causing burning in the burner venturi.

If delayed ignition should occur, the following should be checked. Furnace design makes this extremely unlikely unless safety controls have been by-passed or tampered with. Never by-pass or alter furnace controls.

1. Improper gas pressure - adjust to proper pressure
2. Improper burner positioning - burners should be in locating slots, level front to rear and left to right.
3. Carry over (lighter tube or cross lighter) obstructed - clean.
4. Main burner orifice(s) deformed, or out of alignment to burner - replace.

CHECKING INTEGRATED IGNITION CONTROL BOARDS

NOTE: Failure to earth ground the furnace, reversing the neutral and hot wire connection to the line (polarity), or a high resistance connection in the neutral line may cause the control to lockout due to failure to sense flame.

⚠ WARNING

TO AVOID THE RISK OF ELECTRICAL SHOCK, WIRING TO THE UNIT MUST BE PROPERLY POLARIZED AND GROUNDED. DISCONNECT POWER BEFORE PERFORMING SERVICE LISTED BELOW.

The ground wire must run from the furnace all the way back to the electrical panel. Proper grounding can be confirmed by disconnecting the electrical power and measuring resistance between the neutral (white) connection and the burner closest to the flame sensor. Resistance should be less than 2 ohms.

The ignition control is a combination electronic and electromechanical device and is not field repairable. Complete unit must be replaced.

⚠ WARNING

LINE VOLTAGE NOW PRESENT

These tests must be completed within a given time frame due to the operation of the ignition control. The trial for ignition period is 4 seconds.

The ignition control is capable of diagnosing many furnace failures to help in troubleshooting. The control utilizes a 7-segment LED display to indicate diagnostic codes.

When the control is powered up normally the light will be on continuously. The display will indicate **"Idl"** when powered and in standby mode. This can be used to test for 120 volts and 24 volts to the control since both must be present for the light to be on. If this step fails, check for 120 volts to the control and check the transformer and its associated wiring.

If this step is successful give the control a call for heat and wait five (5) seconds or until the furnace goes into lockout. If the control detects a failure it will now be shown on the diagnostic indicator light/display. Refer to the *Abnormal Operation* section in the *Sequence of Operation* section of this manual for more detail on failure codes.

1. Check for 120 volts from Line 1 (Hot) to Line 2 (Neutral) at the ignition control. No voltage, check the door switch connections and wire harness for continuity.
2. With the thermostat calling for heat, check for 24 volts from W1 to C terminal on the ignition control. No voltage. Check transformer, room thermostat, and wiring.

   If you have 24 volts coming off the transformer but receive approximately 13 volts on the terminal board between (C) and (R), check for blown fuse.
3. Check for 120 volts to the induced draft blower (low-stage) by measuring voltage between Pin 3 and Pin 4 (on the 5-pin connector) located on circuit board. No voltage, check for loose connection in the 5-pin connector or replace ignition control.

   Check for 120 volts to the induced draft blower (high-stage) by measuring voltage between Pin 2 and Pin 4 (on the 5-pin connector) located on circuit board. No voltage, check for loose connection in the 5-pin connector, no call for high stage heat or replace ignition control.
4. If voltage is present in Steps 1 through 3 and the induced draft blower is operating, check for 120 volts to the igniter during the preheat cycle. Measure voltage between Pin 1 and Pin 5 (on the 5-pin connector) located on ignition control. No voltage, check low stage and high stage pressure switches or replace the ignition control board.
5. After the igniter warm-up time, begin checking for 24 volts to the gas valve. Voltage will be present for seven seconds only if proof of flame has been established.
6. If proof of flame was established voltage will be provided to the air circulation blower following the heat on delay period.
   a. BEFORE replacing the ECM motor assembly or the end bell, first check the motor with a Goodman #UTT-01 UltraCheck-EZ™ diagnostic tool. If the motor runs with the diagnostic tool, the motor is good. To check the end bell, see the previous variable speed testing section of this manual before replacing the end bell.
   b. The two-stage variable speed furnaces should have 120 Volts at the motor at all times, even without a call for cooling or heating. These motors receive their operational signals through the 4-pin wiring harness, connected between the motor and integrated control board.

SERVICING

CHECKING FLAME SENSOR

A flame sensing device is used in conjunction with the ignition control module to prove combustion. If proof of flame is not present the control will de-energize the gas valve and "retry" for ignition or lockout.

WARNING

HIGH VOLTAGE

DISCONNECT **ALL** POWER BEFORE SERVICING OR INSTALLING THIS UNIT. MULTIPLE POWER SOURCES MAY BE PRESENT. FAILURE TO DO SO MAY CAUSE PROPERTY DAMAGE, PERSONAL INJURY OR DEATH.

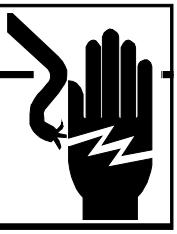

1. Disconnect the flame sensor wire from the sensor.
2. Connect a micro-amp meter in series with this wire and the sensor terminal.
3. Be sure the positive side of the meter is to the flame sensor wire and the negative side of the meter is to sensor terminal.

WARNING

LINE VOLTAGE NOW PRESENT

4. Place the unit into a heating cycle.
5. As soon as flame is established a micro-amp reading should be evident once proof of flame (micro-amp reading) is established, the hot surface igniter will be de-energized.
6. The Integrated Ignition controls will have 1 to 8 micro-amps. If the micro-amp reading is less than the minimum specified, check for high resistance wiring connections, sensor to burner gap, dirty flame sensor, or poor grounding.
7. If absolutely no reading, check for continuity on all components and if good - replace ignition control module.

NOTE: Contaminated fuel or combustion air can create a nearly invisible coating on the flame sensor. This coating works as an insulator causing a loss in the flame sense signal. If this situation occurs the flame sensor must be cleaned with steel wool.

37

STATUS CODES

ClimateTalk Comm 2-Stage AC/HP		
Name	**7-Segment Display**	**Cloud / Phone App**
Idle	IdL	Idle
Constant Fan	FAn	Constant Fan
Compressor Cooling, Low Stage	AC1	Compressor Cooling, Low Stage
Compressor Cooling, High Stage	AC2	Compressor Cooling, High Stage
Compressor Heat, Low Stage	HP1	Compressor Heat, Low Stage
Compressor Heat, High Stage	HP2	Compressor Heat, High Stage
Gas Heat, Low Stage	GH1	Gas Heat, Low Stage
Gas Heat, High Stage	GH2	Gas Heat, High Stage
Defrost, Low Stage Gas Heat	dF1	Defrost, Low Stage Gas Heat
Defrost, High Stage Gas Heat	dF2	Defrost, High Stage Gas Heat
ClimateTalk Comm Inverter AC/HP		
Name	**7-Segment Display**	**Cloud / Phone App**
Idle	IdL	Idle
Constant Fan	FAn	Constant Fan
Compressor Cooling	uAC	Compressor Cooling
Compressor Heat	uAP	Compressor Heat
Gas Heat, Low Stage	GH1	Gas Heat, Low Stage
Gas Heat, High Stage	GH2	Gas Heat, High Stage
Defrost, Low Stage Gas Heat	dF1	Defrost, Low Stage Gas Heat
Defrost, High Stage Gas Heat	dF2	Defrost, High Stage Gas Heat
Single-Stage AC, Legacy 2-Stage		
Name	**7-Segment Display**	**Cloud / Phone App**
Idle	IdL	Idle
Constant Fan	FAn	Constant Fan
Compressor Cooling, Low Stage	1AC	Compressor Cooling, Low Stage
Compressor Cooling, High Stage	2AC	Compressor Cooling, High Stage
Compressor Cooling, Single Stage	AC	Compressor Cooling, Single Stage
Compressor Heat, Low Stage	1AC	Compressor Heat, Low Stage
Compressor Heat, High Stage	2AC	Compressor Heat, High Stage
Compressor Heat, Single Stage	AC	Compressor Heat, Single Stage
Gas Heat, Low Stage	GH1	Gas Heat, Low Stage
Gas Heat, High Stage	GH2	Gas Heat, High Stage
Defrost, Low Stage Gas Heat	dF1	Defrost, Low Stage Gas Heat
Defrost, High Stage Gas Heat	dF2	Defrost, High Stage Gas Heat
Humidifier, De-Humidifier and Ventilator		
Name	**7-Segment Display**	**Cloud / Phone App**
Humidifier	HUd	Humidifier
De-Humidifier	dHU	De-Humidifier
Ventilator	uEL	Ventilator

MENU OPTIONS

Furnace			
Name/Cloud/Phone App	7 Segment Display	User Modifiable Options	Comments
Last 10 Faults	F 10	N/A	Views the control last 10 history faults.
Learn Menu	Lrn	Yes or No.	Resets communication network.
Code Release No	Cr	N/A	Views the control firmware revision number and Shared Data number.
Shared Data Revision	Sr	N/A	Views the control Shared Data revision number and shared data upload.
Reset To Factory Default	rFd	Yes or No.	Reset the furnace setting to factory defaults.
Constant Fan Speed	FSd	Adjustable between 25% to + 100% with 10% ingrements. Default is 25%.	Select the indoor blower airflow at constant fan mode.
Gas Heating Airflow	9AF	Adjustable between Min and Max. Min, Max, Step andDefault are defined in Shared Data.	Select the indoor blower airflow multiplier for gas heat operation.
Gas Heat Off Delay	9Fd	Adjustable between 30 seconds to 180 seconds with 5 seconds increments. Default is 30 seconds.	Selects the indoor blower heat off delay.
Gas Heat On Delay	9nd	Adjustable between 5 seconds to 30 seconds with 30 seconds increments. Default is 90 seconds.	Selects the indoor blower heat off delay.
Gas Heat Trim Factor	9tF	Adjustable between -10% to +10% with 2% increments. Default is 0%.	Trims the heating airflow by the selected amount.
Gas Heat Stage Multiplier	9St	Adjustable between Min and Max. Min, Max, Step and Default are defined in Shared Data.	Selects gas heat stage multiplier
Gas Pressure Test	9Pt	Yes or No.	Checks gas valve pressure at 100% firing rate.
Function Enable/Disable	FEd		Not implemented in the initial
Backup Heat Balance Points	9bP	Adjustable between Min and Max. Min, Max, Step and Default are defined in Shared Data.	This menu only shows up when a communicating Heat Pump is detected.
Comfort Setting	CFS	First 5 option values are defined in Shared Data. The 6th option shall be hard-coded in the firmware with other 5 settings.	Provides the 6 comfort setting options for the furnace staging algorithm operation, only shows up when ClimateTalk or DataAC T-Stat is not connected.
Hum On Enable	HEd	1 ~ 16 options and the default option is 15.	Provides the 16 humidifier enabling options in different operation modes.
Ventilation On Time	U0	Adjustable between 0 ~ 60 minutes. The default is 0 minute Off).	Adjusts the ventilation on time and turn it on/off.
DeHum Logic	dHL	Hi and Lo. The default is Lo.	Provides the DeHum logic input level for DeHum operation. Only applies when the legacy 24VAC input is active.
A2L Function Verification	A2U	Yes or No.	Refer to R-32 Section.
A2L Function Enabled	A2E	Yes or No.	Enables or disables A2L functions. Refer to R-32 section.
Outdoor AC/HP, Single-Stage AC/HP			
Name/Cloud/Phone App	7 Segment Display	User Modifiable Options	Comments
Tonnage	ton	Adjustable between 1 to 6 ton with 0.1 increments. Default is 3 ton.	Only visible when communicating outdoor unit is not detected.
Cool Trim Factor	CtF	Adjustable between -10% to +10% with 2% increments. Default is 0%.	Trims the cooling airflow by the selected amount.
Cool Airflow Profile	CAP	A(1), B(2), C(3), D(4 or 5)	Select cooling airflow profiles.
Cool On Delay	Cnd	Adjustable between 5 to 30 seconds with 5 seconds increments. Default is 5 seconds.	Selects the cooling on delay.
Cool Off Delay	CFd	Adjustable between 30 to 120 seconds with 30 seconds increments. Default is 60 seconds.	Selects the cooling off delay.
Cool Stage Multiplier	CSt	Adjustable between 60% to + 100% with 1% increments. Default is 70%.	Selects stage multiplier for 2-stage OD unit.
Defrost Gas Heat Stage	dHS	1 or 2	Selects the gas heat stage for defrost operation.
Compressor Balance Points	CbP	Adjustable and defined in Shared Data	Provides the compressor balance point options for HP operation.
HP Trim Factor	HtF	Adjustable between -10% to +10% with 2% increments. Default is 0%.	Trims the heating airflow by the selected amount.
HP On Delay	Hnd	Adjustable between 5 to 30 seconds with 5 seconds increments. Default is 5 seconds.	Selects the HP heating on delay.
HP Off Delay	HFS	Adjustable between 30 to 120 seconds with 30 seconds increments. Default is 60 seconds.	Selects the HP heating off delay
HP Stage Multiplier	HSt	Adjustable between 70% to 100% with 5% increments. Default is 70%.	Select stage multiplier for 2-stage OD unit.

TROUBLESHOOTING

Push Button Menu Options

ClimateTalk Comm Outdoor 2-Stage AC/HP			
Name/Cloud/Phone App	**7 Segment Display**	**User Modifiable Options**	**Comments**
Cool Trim Factor	CtF	-10%, -8%,-6%, -4%, -2%, 0%, 2%, 4%, 6%, 8%,10%	Trims the cooling airflow by the selected amount.
Cool Airflow Profile	CAP	A, B, C, D	Select cooling airflow profiles.
Cool On Delay	Cnd	5, 10, 20, 30	Selects the cooling on delay.
Cool Off Delay	CFd	30, 60, 90, 120	Selects the cooling off delay.
Dehumidifcation Enable	dHE	ON, OFF	Enables the dehum function for OD operation.
Defrost Gas Heat Stage	dHS	1 or 2	Selects the gas heat stage for defrost operation.
Compressor Balance Points	CbP	Adjustable and defined in Shared Data	Selects the compressor balance point options for HP operation.
HP Trim Factor	HtF	-10%, -8%,-6%, -4%, -2%, 0%, 2%, 4%, 6%, 8%,10%	Trims the heating airflow by the selcted amount
HP On Delay	Hnd	5, 10, 15	Selects the HP heating on delay.
HP Off Delay	HFd	30, 50, 70, 90	Selects the HP heating off delay.
HP Defrost Interval	Hdi	30, 60, 90, 120	Provides the defrost options for compressor heating operation.
Compressor Delay	CdL	0, 5, 15, 30	Provides the compressor delay options for heating operation.
History Fault and Clear	FCL	Yes or No.	Views the comm outdoor history and clear the outdoor unit history fault.

ClimateTalk Comm Outdoor Inverter AC/HP			
Name/Cloud/Phone App	**7 Segment Display**	**User Modifiable Options**	**Comments**
Boost Mode	bSt	On or Off	Provides the options for inverter boot operation.
Boost Temp	btt	On(Always), 70F, 75F, 80F, 85F, 90F, 95F, 100F, 105F	Provides the 9 temperature options for boot operation.
Set Max Current	SCt	OFF, 40%, 50%, 60%, 70%, 80%, 90%	Selects Max Current options
Vertical Rise	vtr	SL (Same Level), OL (Outdoor Lower), IL (Indoor Lower)	Selects the level of outdoor vas indoor equipment.
System Reset Menu	Srt	Yes or No.	Reset all outdoor unit settings to factory default.
System Verification Test	Svt	On or Off	Runs System Verification Test after Installation.
Pump Down	PPd	On or Off	Enters Pump Down mode.
Charge Mode	Crg	On or Off	Enters charge mode.
Cool-Trim Factor - High	CtH	-15, -12, -9, -6, -3, 0, 3, 6, 9, 12, 15	Trims the cooling airflow by the selected amount.
Cool-Trim Factor - Intermediate	Cti	-15, -12, -9, -6, -3, 0, 3, 6, 9, 12, 15	Trims the cooling airflow by the selected amount.
Cool-Trim Factor - Low	CtL	-15, -12, -9, -6, -3, 0, 3, 6, 9, 12, 15	Trims the cooling airflow by the selected amount.
Cool Airflow Profile	CAP	A, B, C, D	Select cooling airflow profiles.
Cool On Delay	Cnd	5, 10, 20, 30	Selects the cooling on delay.
Cool Off Delay	CFd	30, 60, 90, 120	Selects the cooling off delay.
Dehum Enable	dHE	On or Off	Enables the dehum function for compressor operation.
Cool Reset Menu	CLr	Yes or No.	Resets all cooling settings to factory default.
Cool Max RPS Range	CrP	01(58 to 62.5 RPS), 02(63 to 67.5 RPS), 03(68RPS), 04(68.5 to 73 RPS), 05(73.5 to 78 RPS)	Selects the appropriate range for the installed system configuration.
Cool Max RPS Selection	CrS	10 RPS values from inverter	Selects the appropriate compressor RPS for the installed system configuration.
Defrost Gas Heat Stage	dHS	1 or 2	Selects the gas heat stage for defrost operation.
Compressor Balance Points	CbP	Adjustable and defined in Shared Data	Provides the compressor balance point options for HP operation.
Force Defrost	Fdd	On or Off	
HP Trim Factor - High	HtH	-15, -12, -9, -6, -3, 0, 3, 6, 9, 12, 15	Trims the heating airflow by the selected amount.
HP Trim Factor - Intermediate	Hti	-15, -12, -9, -6, -3, 0, 3, 6, 9, 12, 15	Trims the heating airflow by the selected amount.
HP Trim Factor - Low	HtL	-15, -12, -9, -6, -3, 0, 3, 6, 9, 12, 15	Trims the heating airflow by the selected amount.
HP On Delay	Hnd	5, 10, 20, 30	Selects the HP heating on delay.
HP Off Delay	HFd	30, 60, 90, 120	Selects the HP heating on delay.
HP Defrost Interval	dFi	Maximum amount of compressor runtime before defrost occurs.	Provides the defrost options for compressor heating operation.
HP Reset Menu	Hrt	Yes or No.	Resets all heating settings to factory default.
HP Max RPS Range	HrP	01(58 to 62.5 RPS), 02(63 to 67.5 RPS), 03(68RPS), 04(68.5 to 73 RPS), 05(73.5 to 78 RPS)	Selects the appropriate range for the installed system configuration.
HP Max RPS Selection	HrS	10 RPS values from inverter	Selects the appropriate compressor RPS for the installed system configuration.
History Fault and Clear	FCL	Yes or No.	Views the comm outdoor history and clear the outdoor unit history fault.

40

TROUBLESHOOTING

Symptom	LED Status	Fault Description	Possible Causes	Corrective Action(s)	Notes & Cautions
Normal operation.	IdL	Idle	• Normal operation.	• None	• Normal operation.
Furnace fails to operate. Integrated control module LED display provides no signal.	nonE	No 120VAC power to furnace or no 24 volt power to integrated control module.	• Blown fuse or tripped circuit breaker. • Manual disconnect switch turned OFF, door switch open or 24 volt wire improperly connected or loose. • Furnace electrical supply shared with other devices. • Integrated control module is non-functional.	• Check furnace breaker to see if it has tripped. Reset breaker if tripped. • Check 120VAC power to furnace, primary side of the 24 volt transformer and integrated control module. • Check for possible shorts in 120VAC circuit. Repair as necessary. • If transformer has 120VAC on the primary side, confirm transformer has 24 volts on the secondary side. • Verify 24 volt wires from the transformer to the furnace control board are not damaged and are properly connected to the 12-pin harness. Make repairs or wiring corrections if needed. • If all wiring connections have been verified, replace the furnace control board.	• Turn power OFF prior to repair. • Make wiring repairs or wiring corrections as needed. • Read precautions in "Electrostatic Discharge" section of manual. • Replace control with correct replacement part.
Furnace fails to operate.	Eb0	Circulator blower motor not running when it should be running.	• Loose wiring connection at circulator motor power leads or circulator motor power leads disconnected. • Failed circulator blower motor.	• Tighten or correct wiring connection. • Check circulator blower motor. Replace if necessary.	• Turn power OFF prior to repair. • Replace circulator motor with correct replacement part.
Furnace fails to operate.	Eb1	Integrated control module has lost communications with circulator blower motor.	• Loose wiring connection at circulator motor power leads, • Failed circulator blower motor. • Failed integrated control module.	• Tighten or correct wiring connection. • Check circulator blower motor. Replace if necessary. • Check integrated control module. Replace if necessary.	• Turn power OFF prior to repair. • Replace circulator motor with correct replacement part. • Replace integrated control module with correct replacement part.
Furnace fails to operate.	Eb2	Circulator blower motor horse power in shared data set does not match circulator blower motor horse power.	• Incorrect circulator blower motor in furnace. • Incorrect shared data det in integrated control module.	• Verify circulator blower if motor horsepower is the same specified for the specific model. Replace if necessary. • Verify shared data set is correct for the specific model. Re-populate data using the CoolCloud HVAC App if required.	• Turn power OFF prior to repair. • Replace circulator motor with correct replacement part. • Error code will be cleared once shared data and motor horsepower match.
Furnace operates at reduced performance. Airflow delivered is less than expected.	Eb3	Circulator blower motor is operating in a power, temperature or speed limiting condition.	• Blocked filters. • Restrictive ductwork. • Undersized ductwork. • High ambient temperatures.	• Check filters for blockage. Clean filters or remove obstruction. • Check ductwork for blockage. Remove obstruction. Verify all registers are fully open. • Verify ductwork is appropriately sized for system. Resize/replace ductwork if necessary. • See "III. Product Description" and "IV Location Requirements & Considerations" for furnace installation requirements.	• Turn power OFF prior to repair.
Furnace fails to operate.	Eb4	Circulator blower motor senses a loss of rotor control. Circulator blower motor senses high current.	• Abnormal motor loading, sudden change in speed or torque, sudden blockage of furnace air inlet/outlet.	• Check filters, filter grilles, registers, duct system and furnace air inlet/outlet for blockages.	• Turn power OFF prior to repair.
Furnace fails to operate.	Eb5	Circulator blower motor fails to start 10 consecutive times.	• Obstruction in circulator blower housing. • Seized circulator blower motor bearings. • Failed circulator blower motor.	• Check circulator blower for obstructions. Remove and repair/replace wheel or motor if necessary.	• Turn power OFF prior to repair. • Replace motor with correct replacement part. • Replace wheel with correct replacement part.
Furnace fails to operate.	Eb6	Circulator blower motor shuts down due to over or under voltage condition. Circulator blower motor shuts down due to over temperature condition on power module.	• High AC line voltage to furnace. • Low AC line voltage to furnace. • High ambient temperatures.	• Check power to furnace. Verify line voltage to furnace is within the range specified on the furnace rating plate. See "III. Product Description" and "IV Location Requirements & Considerations" for furnace installation requirements.	• Turn power OFF prior to repair. • Replace motor with correct replacement part. • Re-populate data using the CoolCloudHVAC App if required.
Furnace fails to operate.	Eb7	Circulator blower motor does not have enough information to operate properly. Motor fails to start 40 consecutive times.	• Error with integrated control module. • Motor has a rotor condition.	• Check integrated control module. Verify control is populated with correct shared data set. See data errors above for details. • Check for locked rotor condition.	• Turn power OFF prior to repair.
Furnace operates at reduced performance or operates on low stage when high stage is expected.	Eb9	Airflow is lower than demanded.	• Blocked filters. • Restrictive ductwork. • Undersized ductwork. • High ambient temperatures.	• Check filters for blockage. Clean filters or remove obstruction. • Check ductwork for blockage. Remove obstruction. Verify all registers are fully open. • Verify ductwork is appropriately sized for system. Resize/replace ductwork if necessary.	• Turn power OFF prior to repair.

TROUBLESHOOTING

Symptom	LED Status	Fault Description	Possible Causes	Corrective Action(s)	Notes & Cautions
Furnace fails to operate.	Ed0	Data not yet on network.	• No network Data	• Populate shared data set using the CoolCloudHVAC App. • Error code will be cleared once data is downloaded from the CoolCloudHVAC App.	• Turn power OFF prior to repair. • Use the CoolCloudHVAC App to download the shared data set to the furnace.
Operation different than expected or no operation.	Ed1	Invalid shared data.	• Shared data set is invalid. Use the CoolCloudHVAC App to download the shared data to the furnace.	• Verify shared data set is correct for the specific model. Re-populate shared data set using the CoolCloudHVAC App.	• Turn power OFF prior to repair. • Error code will be cleared once data is downloaded from the CoolCloudHVAC App.
Furnace fails to operate.	EE0	Furnace lockout due to excessive number of ignition "retries" (3 total). Failure to establish flame. Loss of flame after establishment.	• No gas or improper gas pressure to burners. • Bad igniter or igniter alignment. • Orifices restricted. • Coated/oxidized or improperly connected flame sensor. • Restriction in flue and/or lack of combustion air. • Improper induced draft blower performance.	• Locate and correct gas interruption. • Check front cover pressure switch operation (hose, wiring, contact operation). Correct if necessary. • Replace or realign igniter. • Check flame sense signal. Clean sensor if coated and/or oxidized. • Check flue piping for blockage, proper length, elbows and termination. • Verify proper induced draft blower performance.	• Turn power OFF prior to repair. • Igniter is fragile, handle with care. • Clean flame sensor with steel wool. • See "Vent/Flue Pipe" section for piping details.
Furnace fails to operate.	EE1	Low-stage pressure switch circuit closed at start of heating cycle.	• Low stage pressure switch contacts sticking. • Short in pressure switch circuit wiring.	• Replace low stage pressure switch. • Repair short in wiring.	• Turn power OFF prior to repair. • Replace pressure switch with proper replacement part.
Induced draft blower runs continuously with no further furnace operation.	EE2	Low-stage pressure switch circuit open.	• Pressure switch hose blocked, pinched, or connected improperly. • Blocked flue and/or inlet air pipe, blocked drain system or weak induced draft blower. • Incorrect pressure switch set point or malfunctioning switch contacts. • Loose or improperly connected wiring.	• Inspect pressure switch hose. Repair/replace if necessary. • Inspect flue and/or inlet air piping for blockage, proper length, elbows and termination. Check drain system. Correct as necessary. • Correct pressure switch set point or contact motion. • Tighten or correct wiring connections.	• Turn power OFF prior to repair. • Replace pressure switch with proper replacement part. • Replace induced draft blower with proper replacement part.
Circulator blower runs continuously with no furnace operation.	EE3	Primary limit circuit open.	• Insufficient conditioned air over the heat exchanger. • Blocked filters, restrictive ductwork. • Inproper circulator blower speed or failed circulator blower motor.	• Check filters and ductwork for blockage. Clean filters or remove obstruction. • Check circulator blower speed and performance. Correct speed or replace blower motor if necessary.	• Turn power OFF prior to repair. • See Specification Sheet applicable for your model for allowable temp rise range and proper circulator speed.
Induced draft blower and circulator blower run continuously with no furnace operation.	EE4	Flame sensed with no call for heat.	• Short to ground in flame sense circuit. • Lingering burner flame. • Slow closing gas valve.	• Correct short at flame sensor or in flame sensor wiring. • Check for lingering flame. • Verify proper operation of gas valve.	• Turn power OFF prior to repair.
No furnace operation.	EE5	Open fuse.	• Blown fuse • Short in low voltage wiring • Back of control board is touching mounting panel because standoffs are missing.	• Replace fuse • Locate and correct short in low voltage wiring. • Replace the missing standoffs.	• Turn power OFF prior to repair. • Replace fuse with 3-amp automotive type.
Normal furnace operation with weak flame signal.	EE6	Flame sense micro amp signal is low.	• Flame sensor is coated/oxidized. • Flame sensor incorrectly positioned in burner flame. • Lazy burner flame due to improper gas pressure or combution air.	• Clean flame sensor if coated or oxidized. • Inspect flame sensor for proper alignment. • Check inlet air piping for blockage, proper length, elbows and termination. • Compare current gas pressure to rating plate and adjust as needed.	• Turn power OFF prior to repair. • Clean flame sensor with steel wool. • See "Vent/Flue Pipe" section for piping details. • See rating plate for proper gas pressure.
Furnace fails to operate.	EE7	Problem with ignitor circuit.	• Improperly connected ignitor. • Shorted ignitor. • Poor furnace ground. • Ignitor relay fault on integrated control module.	• Check and correct wiring from integrated control board to ignitor. • Diagnose and replace shorted ignitor as needed. • Verify and correct furnace ground wiring. • Check ignitor output from control. Replace if necessary.	• Turn power OFF prior to repair. • Replace ignitor with correct replacement part. • Replace control with correct replacement part.
Furnace fails to operate on high stage. Furnace operates normally on low stage.	EE8	High-stage pressure switch circuit closed at start of heating cycle.	• High stage pressure switch contacts sticking. • Short in pressure switch circuit wiring.	• Diagnose and replace high stage pressure switch if needed. • Repair short in wiring.	• Turn power OFF prior to repair. • Replace pressure switch with proper replacement part.
Furnace fails to operate on high stage. Furnace operates normally on low stage.	EE9	High-stage pressure switch circuit open.	• Pressure switch hose blocked, pinched, or connected improperly. • Blocked flue and/or inlet air pipe, blocked drain system or weak induced draft blower. • Incorrect pressure switch set point or malfunctioning switch contacts. • Loose or improperly connected wiring.	• Inspect pressure switch hose. Repair/replace if necessary. • Inspect flue and/or inlet air piping for blockage, proper length, elbows and termination. Check drain system. Correct as necessary. • Check induced draft blower performance. Correct as necessary. • Correct pressure switch set point or contact motion. • Tighten or correct wiring connections.	• Turn power OFF prior to repair. • Replace pressure switch with proper replacement part. • Replace induced draft blower with proper replacement part.
Furnace fails to operate.	E10	Grounding fault	• Poor neutral connection.	• Verify neutral wire connection to furnace and continuity to ground source.	• Turn power OFF prior to repair.

TROUBLESHOOTING

Symptom	LED Status	Fault Description	Possible Causes	Corrective Action(s)	Notes & Cautions
Furnace fails to operate.	E11	Open rollout switch.	• Gas pressure too high. • Burners mis-aligned. • Restricted heat exchanger or venting.	• Check and correct gas pressure. • Check and correct burner alignment. • Check and correct restriction	• Turn power OFF prior to repair.
External return air temperature reading not visible on CoolCloud app	E15	Return Air Temperature Sensor Circuit is Open (External)		NOTE: Allow time as the control may take up to 90 seconds to detect sensors. • Verify that the sensor probe is plugged in all the way • Verify that the sensor probe connector is properly crimped. • Verify that resistance across the sensor probe is 10kΩ at 77°F. Resistance is lower at temperatures higher than 77°F. Resistance is higher at temperatures lower than 77°F. • Replace PCB	
External return air temperature reading not visible on CoolCloud app	E16	Return Air Temperature Sensor Circuit is Shorted (External)		• Check sensor probe terminals & conductors for electrical short. • Check PCB connector for shorts if sensor short error reported when sensor probe is not plugged in. • Replace PCB	
Supply air temperature reading not visible on CoolCloud app	E17	Supply Air Temperature Sensor Circuit is Open (External)		NOTE: Allow time as the control may take up to 90 seconds to detect sensors. • Verify that the sensor probe is plugged in all the way • Verify that the sensor probe connector is properly crimped. • Verify that resistance across the sensor probe is 10kΩ at 77°F. Resistance is lower at temperatures higher than 77°F. Resistance is higher at temperatures lower than 77°F. • Replace PCB	
Supply air temperature reading not visible on CoolCloud app	E18	Supply Air Temperature Sensor Circuit is Shorted (External)		• Check sensor probe terminals & conductors for electrical short. • Check PCB connector for shorts if sensor short error reported when sensor probe is not plugged in. • Replace PCB	
Onboard return air temperature reading not visible on CoolCloud app	E19	Onboard return air temperature sensor is unplugged		• Power cycle the furnace, the control may take up to 90 seconds to detect sensors • Check PCB for any visible electrical or mechanical damage to onboard sensor (R311). • Replace PCB	
Onboard return air temperature reading not visible on CoolCloud app	E1A	Onboard return air temperature sensor is shorted.		• Power cycle the furnace, the control may take up to 90 seconds to detect sensors • Ensure there are no foreign objects on the PCB that could cause an electrical short at onboard sensor (R311). • Replace PCB	• Turn power OFF prior to repair.
Furnace fails to operate.	EEA	Polarity if 115 volt AC is reversed.	• Polarity of 115 volt AC power to furnace or integrated control module is reversed. • Poor furnace ground.	• Review wiring diagram to correct polarity. • Verify proper ground. Correct if necessary. • Check and correct wiring.	• Turn power OFF prior to repair.
Furnace fails to operate.	EEb	Integrated Control Board is not energizing the gas valve when it should be on.	• Miswired gas valve circuit. • Open gas valve circuit. • Gas valve relay on integrated control board stuck open.	• Check wiring in gas valve circuit. • Replace integrated control board. • Do NOT replace the gas valve.	• Turn power OFF prior to repair.
Furnace fails to operate.	EEC	Gas valve is energized when it should be off.	• Miswired gas valve circuit. • Shorted gas valve wiring.	• Cycle 120VAC power to the furnace control. If EEC error code is still active, turn off power to the furnace and continue diagnosis. NOTE: This error code is a wiring issue external to the furnace control board. • Inspect system wiring for damage and repair if needed. • If EEC error code is still active, replace system wiring harness. NOTE: After replacing system wire harness, if EEC is still active, replace integrated control board.	• Turn power OFF prior to repair.
Furnace fails to operate.	EEd	Auxiliary limit switch open (blower compartment).	• 115 volt power supply was shut off during heat cycle. • Insufficient conditioned air over the heat exchanger. Blocked filters, restrictive ductwork, improper circulator blower speed or failed circulator blower motor.	• Check filters and ductwork for blockage. Clean filters or remove obstruction. • Check circulator blower speed and performance. Correct speed or replace blower motor if necessary. • Tighten or correct wiring connections.	• Turn power OFF prior to repair. • See Specification Sheet applicable for your model for allowable temp rise range and proper circulator speed.

TROUBLESHOOTING

Symptom	LED Status	Fault Description	Possible Causes	Corrective Action(s)	Notes & Cautions
Furnace fails to operate.	EEE	Furnace control board has detected an internal fault.	• 120VAC power wiring loose or damaged. • Poor ground wire. • Damaged or miswired 120V or 24V wiring on the furnace.	• Turn off power to the furnace for at least 3 minutes, then turn power back on (to see if the EEE code will reset). • Inspect 120V and 24V wiring to the furnace and on the furnace for signs of damage or miswiring. • Replace integrated control board. • Do not replace additional components based on this error code.	• Turn power OFF prior to repair. • Replace the integrated control board with proper replacement part. • Do not replace additional components based on this error code.
Furnace fails to operate.	EEF	AUX switch (condensate switch) open.	• High water level in evaporator coil drain pan or auxiliary drain pan	• Check evaporator coil drain pan, trap, piping and auxiliary drain pan.	• Turn power OFF prior to repair.
Furnace fails to operate.	EbF	Inducer communicating error.		• Ensure the inducer connector is properly inserted and the integrated control module is properly grounded.	• Turn power OFF prior to repair.
Furnace fails to operate.	ECF	Gas valve stepper motor communication error.	• No power to gas valve	• Verify voltage to gas valve.	• Turn power OFF prior to repair.
Furnace stops heating and only the fan is operating.	EAF	Furnace has lost communication with the R-32 sensor and the furnace is in mitigation mode.	**Furnace may not be paired with R-32 Cooling Unit. Refer to the R-32 Information Section.**	• Verify wire connection to R-32 sensor is not loose. • Verify the R-32 sensor wire is not damaged. • Replace R-32 sensor if necessary.	• Turn power OFF prior to repair. • Replace R-32 sensor with proper replacement part.
Furnace stops heating and only the fan is operating.	EA0	R-32 sensor has detected a refrigerant leak and furnace is in mitigation mode.		• Investigate the indoor coil for a refrigerant leak. • Furnace will resume normal operation once a leak is not detected and the 5 minute delay period is over.	• Turn power OFF prior to repair.
Furnace stops heating and only the fan is operating.	EA1	R-32 sensor has detected a fault and furnace is in mitigation mode.		• Investigate the R-32 sensor. • Replace the R-32 sensor if necessary.	• Turn power OFF prior to repair. • Replace R-32 sensor with proper replacement part.
Furnace stops heating and only the fan is operating.	EA2	The furnace control board has detected an issue with the internal A2L relay and is running mitigation mode.		• Disconnect any wire connected to the ALARM terminal of the furnace control. • Cycle power to the furnace. If the error code clears, there is an issue with the wiring connected to the ALARM terminal. Repair wiring if necessary. • If the error code does not clear, replace the integrated control board.	• Turn power OFF prior to repair. • Replace the integrated control board with proper replacement part.

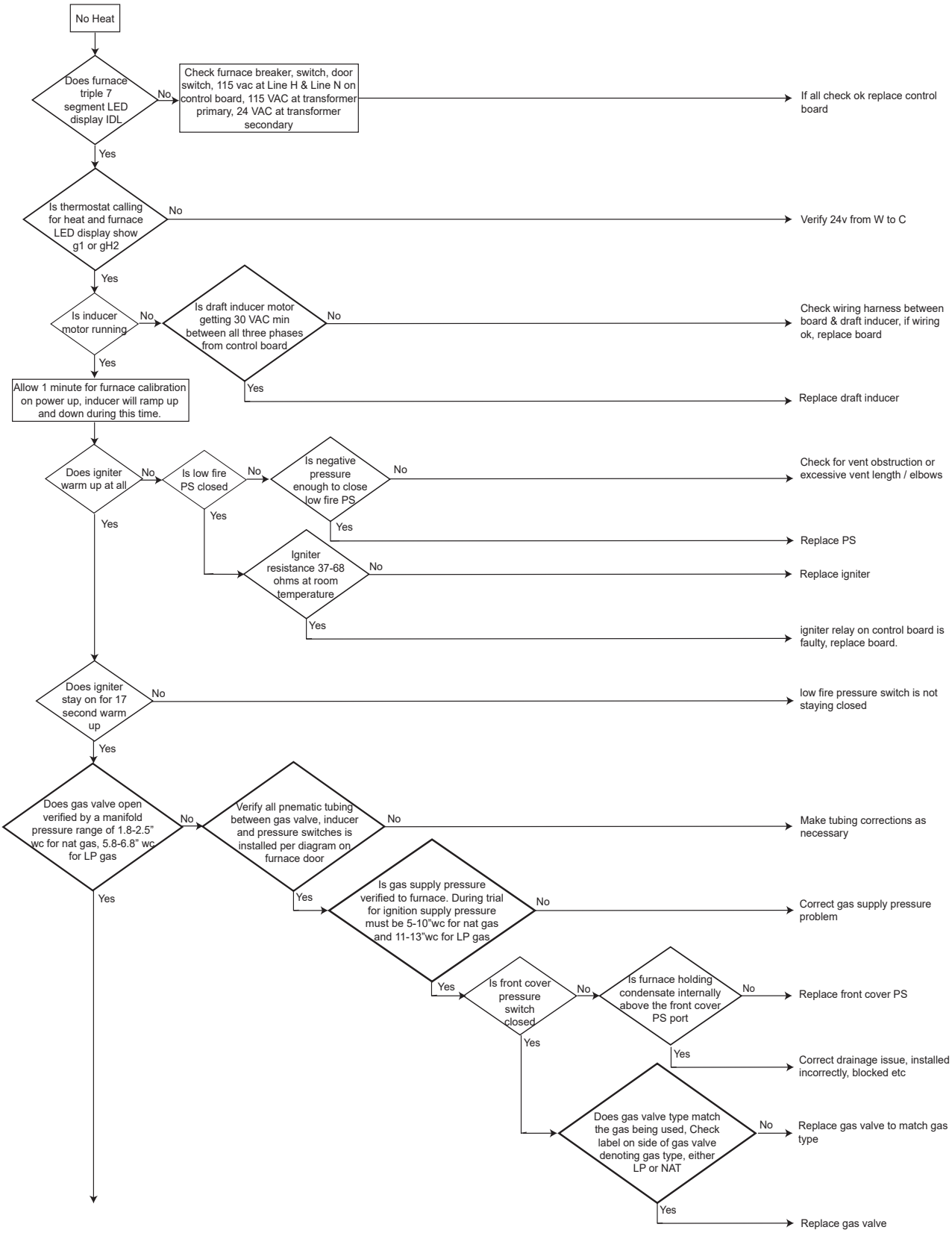
No Heat
Does furnace triple 7 segment LED display IDL
No
Check furnace breaker, switch, door switch, 115 vac at Line H & Line N on control board, 115 VAC at transformer primary, 24 VAC at transformer secondary
If all check ok replace control board
Yes
Is thermostat calling for heat and furnace LED display show g1 or gH2
No
Verify 24v from W to C
Yes
Is inducer motor running
No
Is draft inducer motor getting 30 VAC min between all three phases from control board
No
Check wiring harness between board & draft inducer, if wiring ok, replace board
Yes
Yes
Replace draft inducer
Allow 1 minute for furnace calibration on power up, inducer will ramp up and down during this time.
Does igniter warm up at all
No
Is low fire PS closed
No
Is negative pressure enough to close low fire PS
No
Check for vent obstruction or excessive vent length / elbows
Yes
Yes
Replace PS
Igniter resistance 37-68 ohms at room temperature
No
Replace igniter
Yes
igniter relay on control board is faulty, replace board.
Yes
Does igniter stay on for 17 second warm up
No
low fire pressure switch is not staying closed
Yes
Does gas valve open verified by a manifold pressure range of 1.8-2.5" wc for nat gas, 5.8-6.8" wc for LP gas
No
Verify all pnematic tubing between gas valve, inducer and pressure switches is installed per diagram on furnace door
No
Make tubing corrections as necessary
Yes
Yes
Is gas supply pressure verified to furnace. During trial for ignition supply pressure must be 5-10"wc for nat gas and 11-13"wc for LP gas
No
Correct gas supply pressure problem
Yes
Is front cover pressure switch closed
No
Is furnace holding condensate internally above the front cover PS port
No
Replace front cover PS
Yes
Yes
Correct drainage issue, installed incorrectly, blocked etc
Does gas valve type match the gas being used, Check label on side of gas valve denoting gas type, either LP or NAT
No
Replace gas valve to match gas type
Yes
Replace gas valve

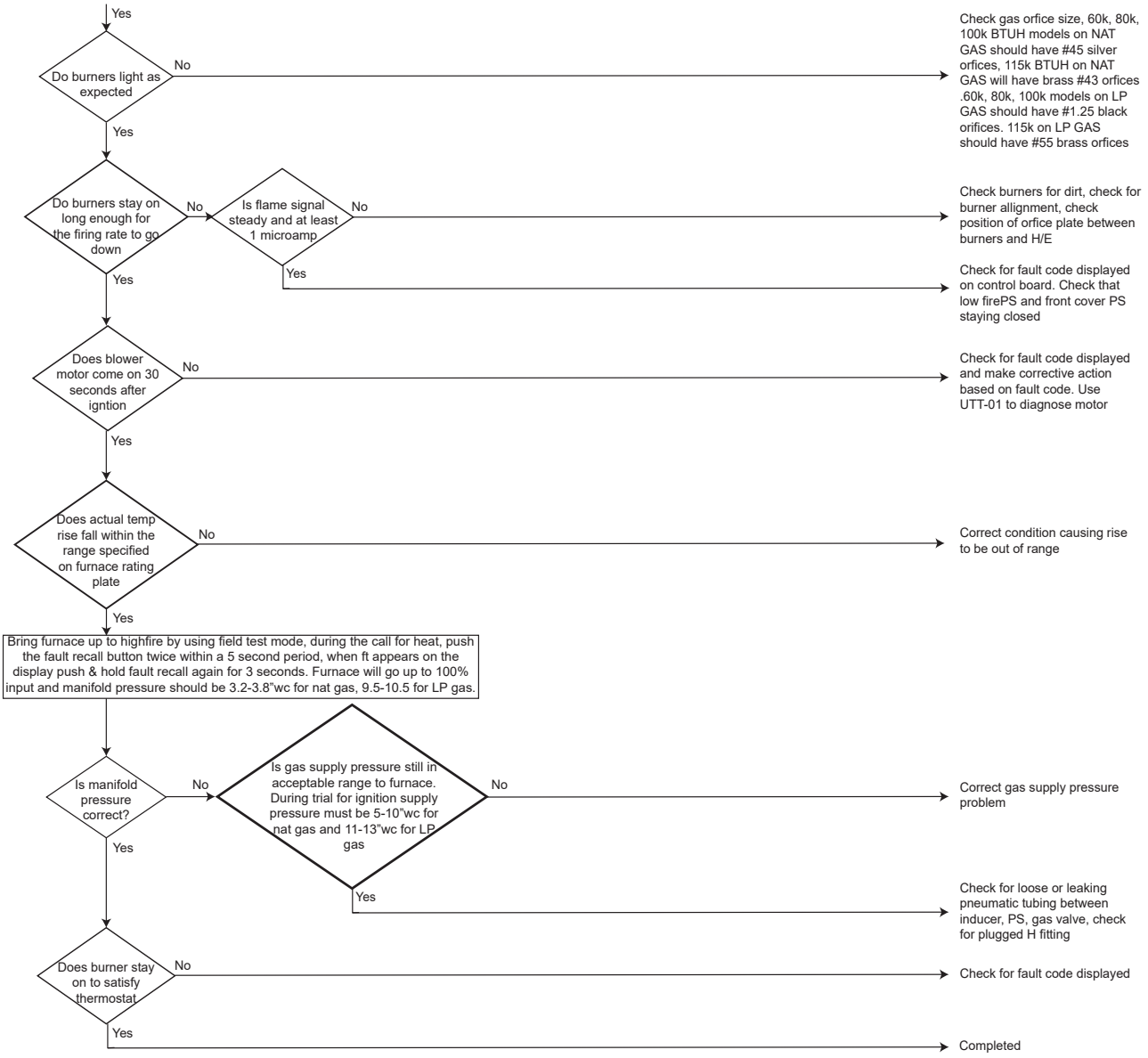
Yes
Do burners light as expected
No
Check gas orfice size, 60k, 80k, 100k BTUH models on NAT GAS should have #45 silver orfices, 115k BTUH on NAT GAS will have brass #43 orfices .60k, 80k, 100k models on LP GAS should have #1.25 black orifices. 115k on LP GAS should have #55 brass orfices
Yes
Do burners stay on long enough for the firing rate to go down
No
Is flame signal steady and at least 1 microamp
No
Check burners for dirt, check for burner allignment, check position of orfice plate between burners and H/E
Yes
Check for fault code displayed on control board. Check that low firePS and front cover PS staying closed
Yes
Does blower motor come on 30 seconds after igntion
No
Check for fault code displayed and make corrective action based on fault code. Use UTT-01 to diagnose motor
Yes
Does actual temp rise fall within the range specified on furnace rating plate
No
Correct condition causing rise to be out of range
Yes
Bring furnace up to highfire by using field test mode, during the call for heat, push the fault recall button twice within a 5 second period, when ft appears on the display push & hold fault recall again for 3 seconds. Furnace will go up to 100% input and manifold pressure should be 3.2-3.8"wc for nat gas, 9.5-10.5 for LP gas.
Is manifold pressure correct?
No
Is gas supply pressure still in acceptable range to furnace. During trial for ignition supply pressure must be 5-10"wc for nat gas and 11-13"wc for LP gas
No
Correct gas supply pressure problem
Yes
Check for loose or leaking pneumatic tubing between inducer, PS, gas valve, check for plugged H fitting
Yes
Does burner stay on to satisfy thermostat
No
Check for fault code displayed
Yes
Completed

Error Code:
B0 - Circulator blower motor not running when it should be running.

B1 - Integrated control module has lost communications with circulator blower motor.

Applicable Models:
(for Goodman Amana Brand)
*RVS-U, *DVT, *RVT, *DVM, *RVM

(for Daikin)
DR**SC-U, DD**TC, DR**TC, DD97MC, DR97MC

Method of Error Detection:
B0 - High voltage to the motor, no DC voltage to the motor or no communication to blower motor.
B1 - Bad ground or no communication to blower motor.

Error Decision Conditions:
Primary voltage to blower motor out of range.
Missing DC voltage between pins 1 and 4.

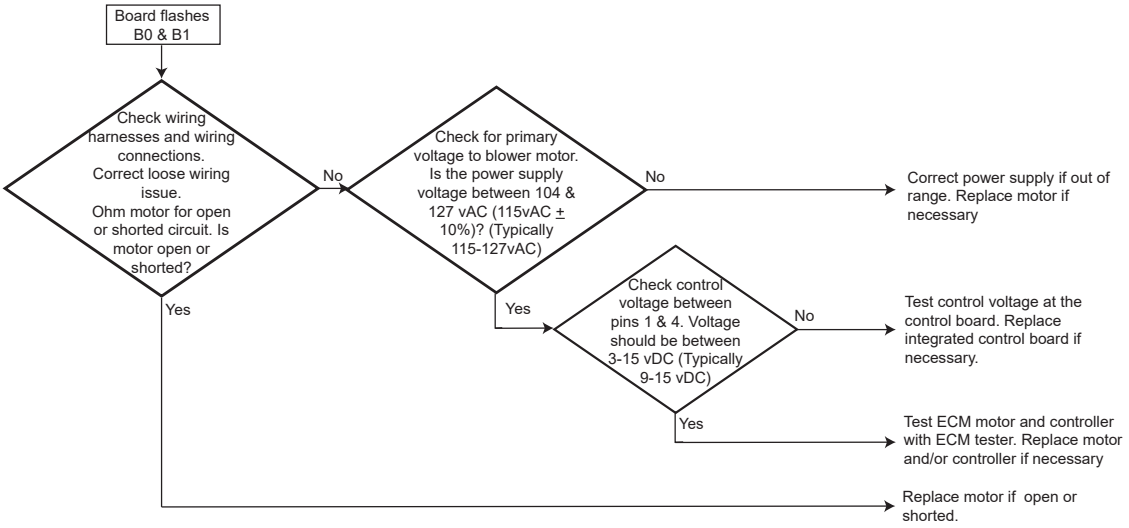

Error Code:
B2 - Circulator blower motor HP in shared data set does not match circulator blower motor HP.

B3 - Circulator blower motor is operating in a power, temperature or speed limiting condition.

B4 - Circulator blower motor senses a loss of rotor control or high current.

B5 - Circulator blower motor fails to start 10 consecutive times.

B6 - Circulator blower motor shuts down due to over or under voltage condition, or over temperature condition.

B9 - Airflow is lower than demanded.

Applicable Models:
(for Goodman/Amana Brand)
*RVS80-U, *RVS96-U, *DVT, *RVT, *DVM97, *RVM97

(for Daikin)
DM**SC-U

Method of Error Detection:
Wrong horsepower blower motor, primary voltage to motor is out of range, high temperature, high amp draw blower motor failure.

Error Decision Conditions:
Wrong horsepower blower motor, primary voltage to motor is out of range, high temperature, high amp draw blower motor failure.

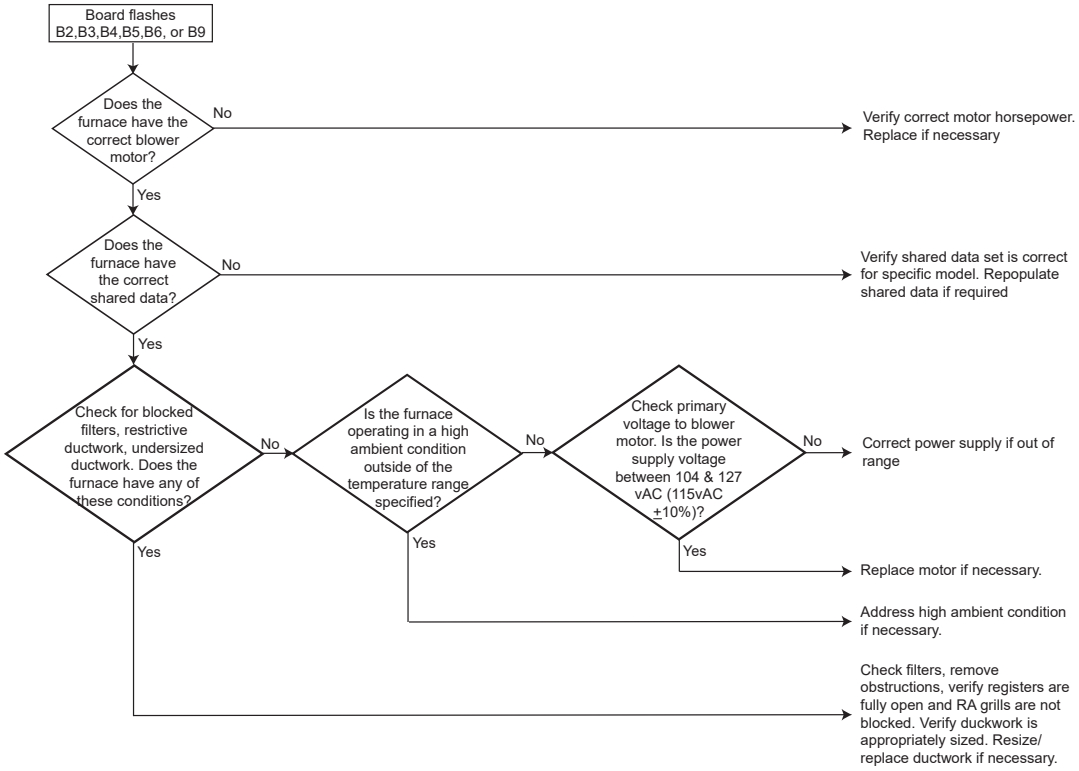

Error Code:
E0 - Lockout due to an excessive number of ignition retries (3 total)

Applicable Models:
All 90% models

Method of Error Detection:
Furnace fails to ignite after 3 retires

Error Decision Conditions:
No gas or low gas pressure at manifold. Bad hot surface ignitor - not glowing, dirty flame sensor

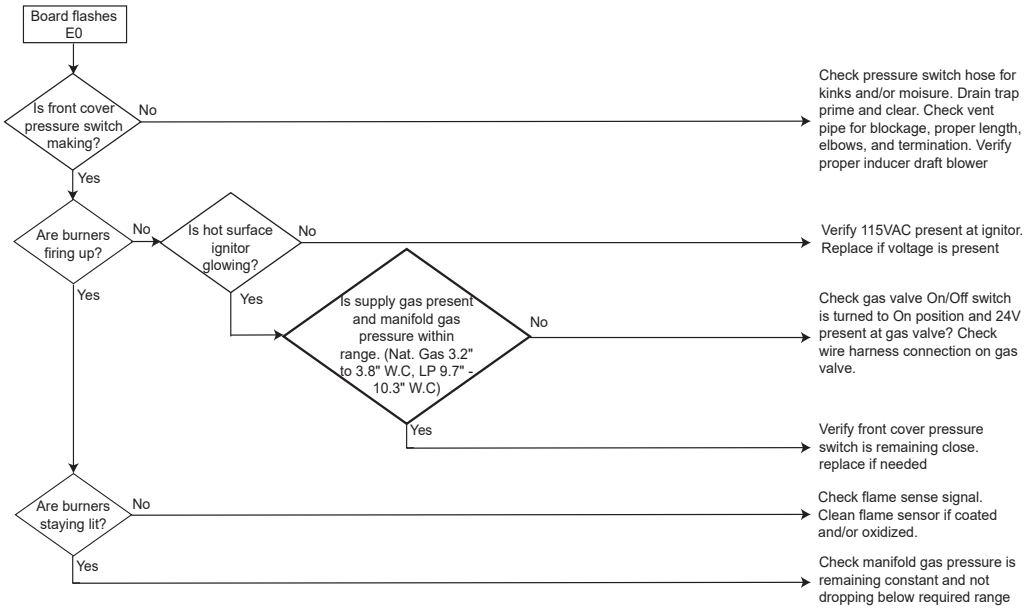

Error Code:
E3 - Primary limit circuit is open.

Applicable Models:
All furnace models

Method of Error Detection:
Temperature across primary limit during heating operation.

Error Decision Conditions:
During heating operation, primary limit break temperature has opened the primary limit circuit.

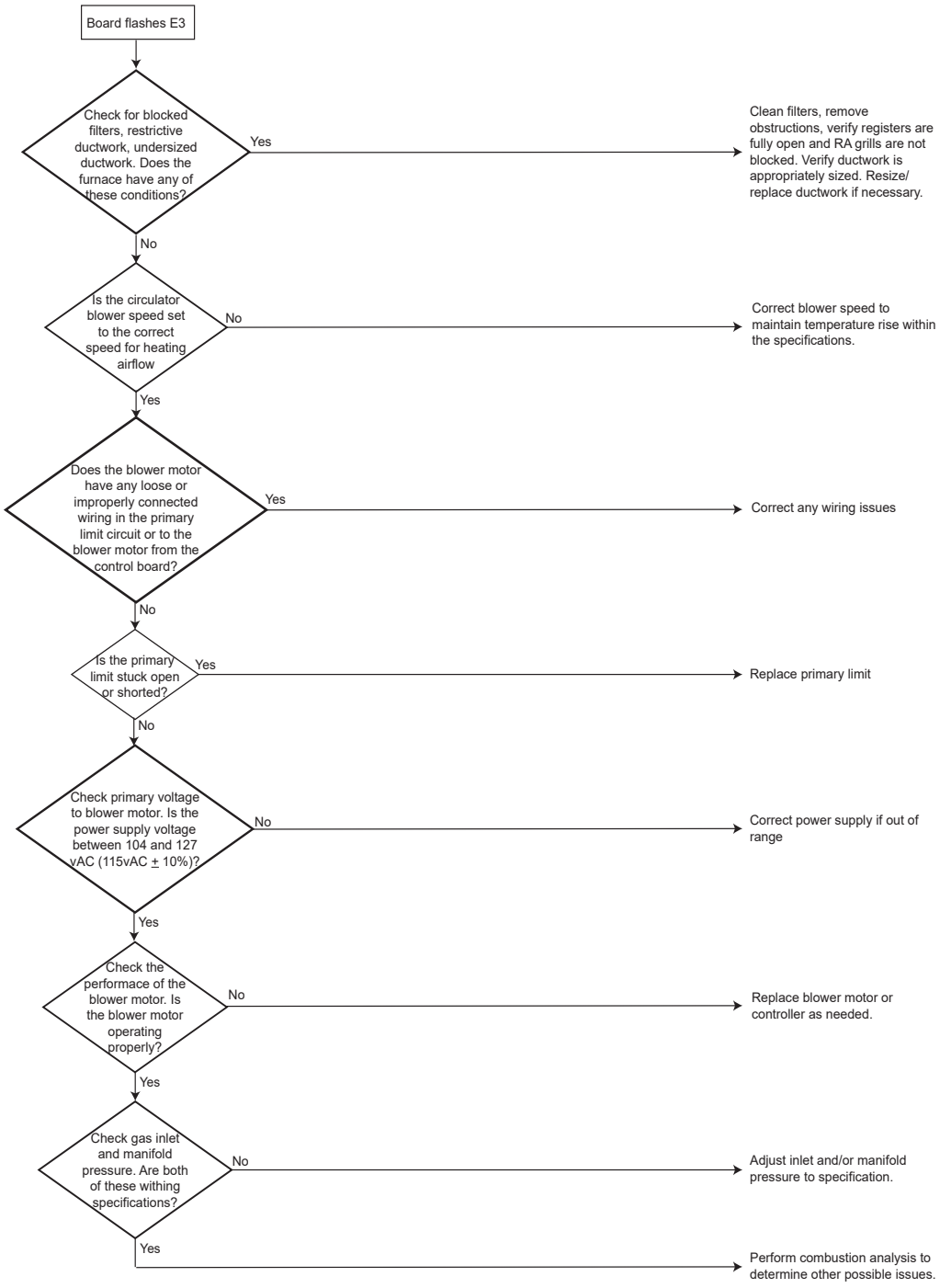

Error Code:
E4 - Flame sensed with no call for heat.

E6 - Flame sense micro amp signal is minimal.

Applicable Models:
All furnace models

Method of Error Detection:
Micro amp signal from flame sensor.

Error Decision Conditions:
Micro amp reading with no call for heat.
Low micro amp reading after furnace ignition.

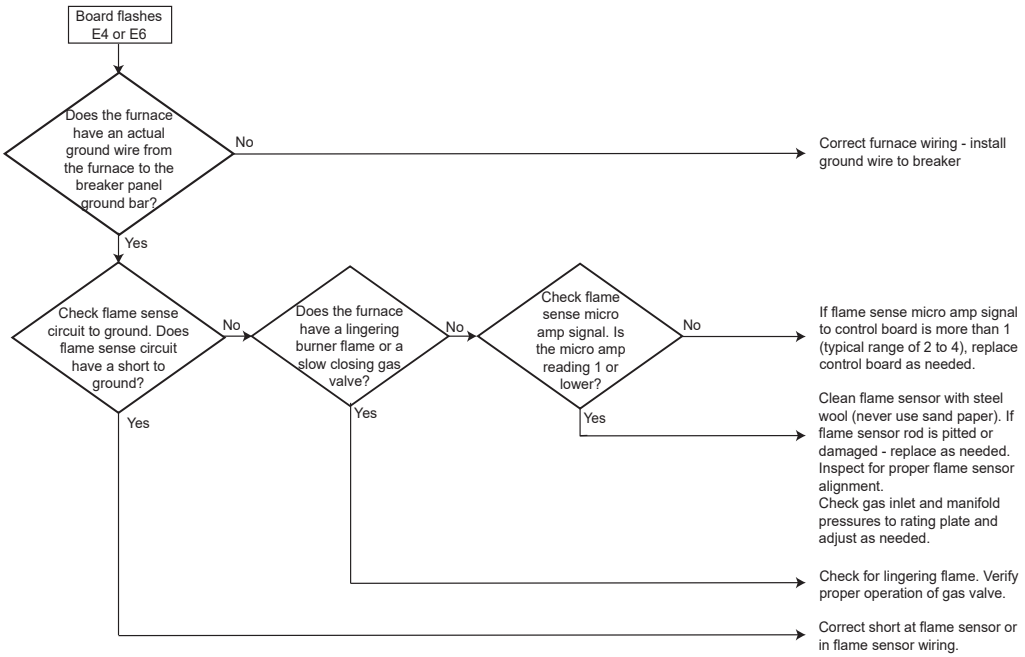

Error Code:
Eb - Gas valve is not energized when it should be. External Gas Valve Error.

EC - Gas valve is energized when it should not be. Internal Gas Valve Error.

Applicable Models:
(for Goodman/Amana Brand)
All furnace models

(for Daikin)
All furnace models, except Daikin modulating furnaces

Method of Error Detection:
No voltage to gas valve when voltage should be present.
Voltage to gas valve with no call for heat.

Error Decision Conditions:
No voltage reading at gas valve with a call for heat.
Voltage reading at gas valve with no call for heat.

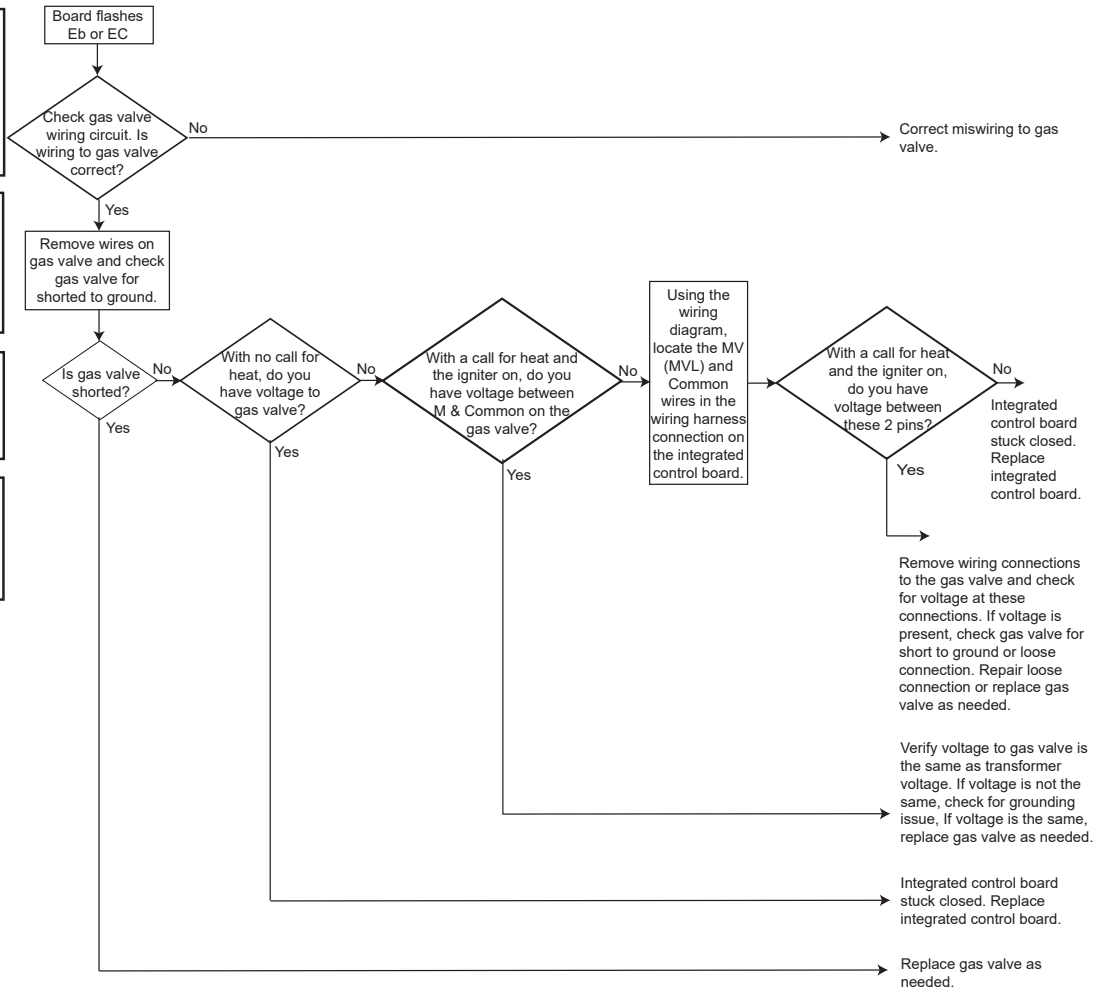

WIRING DIAGRAMS

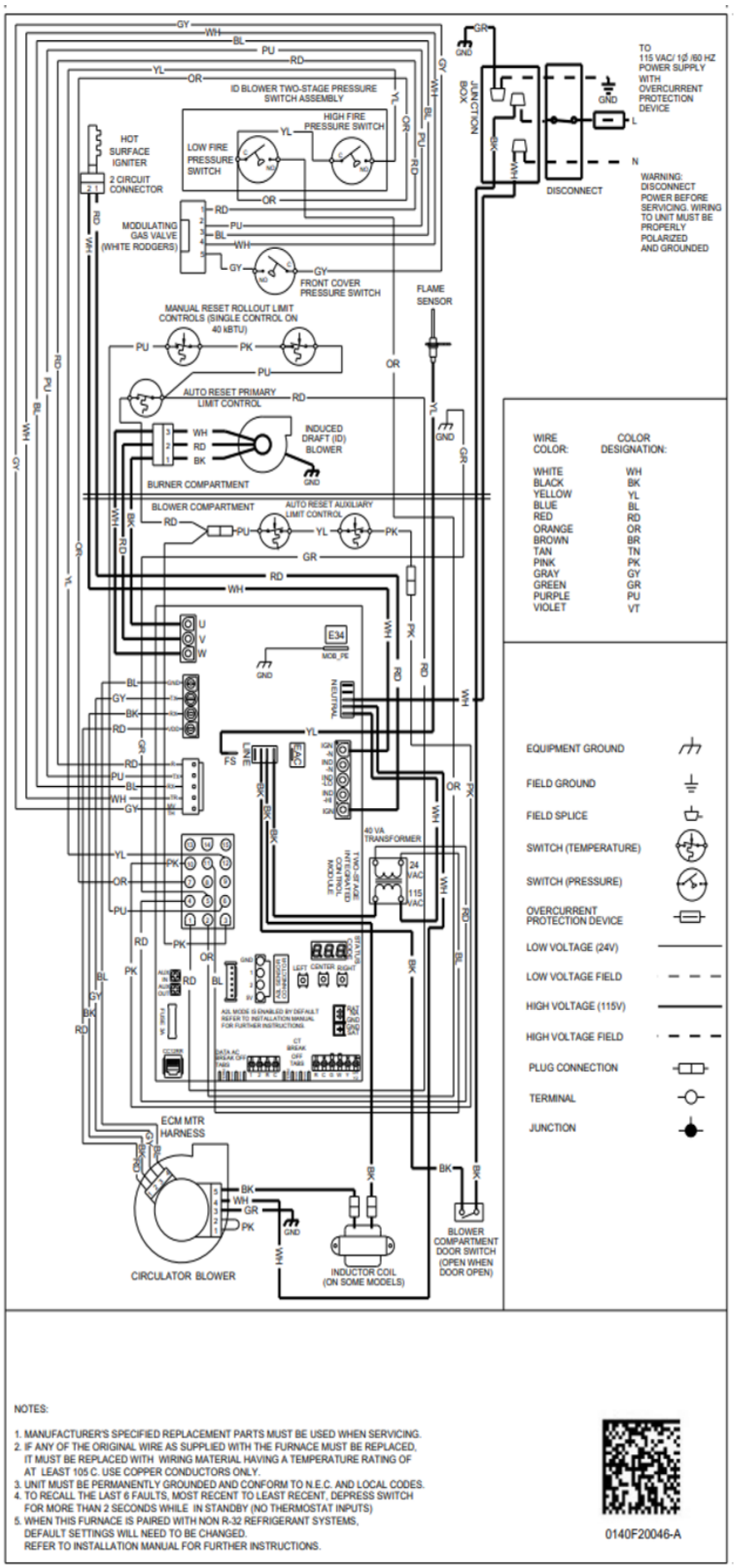

Wiring is subject to change. Always refer to the wiring diagram on the unit for the most up-to-date wiring.