DAIKIN Service Instructions

DR96TN/DD96TN Two Stage Furnace with Nine Speed ECM Motor

Pride and workmanship go into every product to provide our customers with quality products. It is possible, however, that during its lifetime a product may require service. Products should be serviced only by a qualified service technician who is familiar with the safety procedures required in the repair and who is equipped with the proper tools, parts, testing instruments and the appropriate service manual. **REVIEW ALL SERVICE INFORMATION IN THE APPROPRIATE SERVICE MANUAL BEFORE BEGINNING REPAIRS.**

TABLE OF CONTENTS

Important Information 2
Product Identification 3
System Operation 4
Scheduled Maintenance 11
Servicing 15
- Checking Voltage 16
- Checking Wiring 16
- Checking thermostat, wiring 16
- Checking transformer and control circuit 16
- checking air circulator blower motor 17
- Checking Temperature Rise 18
- Checking Primary Limit Control 19
- Checking Auxiliary Limit Control 19
- Checking Flame Rollout Control 20
- induced draft blower motor 21
- checking Gas Valve (Redundant) 21
- Checking Main Burners 21
- Checking Orifices 21
- Checking Gas Pressure 22
- Checking Hot Surface Ignitor 24
- Checking for flashback 24
- checking Pressure Switch 24
- High Altitude Application 24
- Checking For Delayed Ignition 24
- Checking Intergrated Ignition Control Board 25
- Checking Flame Sensor 25

Troubleshooting 26
Wiring Diagrams 38

WARNING

DO NOT BYPASS SAFETY DEVICES

QUEBEC DISCLOSURE REGARDING AVAILABILITY OF REPLACEMENT PARTS, REPAIR SERVICES AND INFORMATION FOR MAINTENANCE AND REPAIR: Daikin Comfort Technologies Manufacturing, Inc. (Daikin) does not guarantee the availability of (1) replacement parts; (2) repair services; and (3) information necessary to maintain or repair products, within the meaning of section 39.1 of the Consumer Protection Act, CQLR, c P-40.1 and section 79.18 of the Regulation respecting the application of the Consumer Protection Act, CQLR, c P-40.1, r. 3.

AVIS POUR LE QUÉBEC CONCERNANT LA DISPONIBILITÉ DES PIÈCES DE RECHANGE, DES SERVICES DE RÉPARATION ET DES RENSEIGNEMENTS POUR L'ENTRETIEN ET LA RÉPARATION : Daikin Comfort Technologies Manufacturing, Inc. (Daikin) ne garantit pas la disponibilité (1) des pièces de rechange, (2) des services de réparation et (3) des renseignements pour l'entretien et la réparation, au sens de l'article 39.1 de la Loi sur la protection du consommateur, RLRQ c P-40.1 et de l'article 79.18 du Règlement d'application de la Loi sur la protection du consommateur, RLRQ c P-40.1, r 3.

WARNING

ONLY PERSONNEL THAT HAVE BEEN TRAINED TO INSTALL, ADJUST, SERVICE, MAINTENANCE OR REPAIR (HEREINAFTER, "SERVICE") THE EQUIPMENT SPECIFIED IN THIS MANUAL SHOULD SERVICE THE EQUIPMENT.

THIS EQUIPMENT IS NOT INTENDED FOR USE BY PERSONS (INCLUDING CHILDREN) WITH REDUCED PHYSICAL, SENSORY OR MENTAL CAPABILITIES, OR LACK OF EXPERIENCE AND KNOWLEDGE, UNLESS THEY HAVE BEEN GIVEN SUPERVISION OR INSTRUCTION CONCERNING USE OF THE APPLIANCE BY A PERSON RESPONSIBLE FOR THEIR SAFETY.

CHILDREN SHOULD BE SUPERVISED TO ENSURE THAT THEY DO NOT PLAY WITH THE EQUIPMENT.

THE MANUFACTURER WILL NOT BE RESPONSIBLE FOR ANY INJURY OR PROPERTY DAMAGE ARISING FROM IMPROPER SUPERVISION, SERVICE OR SERVICE PROCEDURES. IF YOU SERVICE THIS UNIT, YOU ASSUME RESPONSIBILITY FOR ANY INJURY OR PROPERTY DAMAGE WHICH MAY RESULT. IN ADDITION, IN JURISDICTIONS THAT REQUIRE ONE OR MORE LICENSES TO SERVICE THE EQUIPMENT SPECIFIED IN THIS MANUAL, ONLY LICENSED PERSONNEL SHOULD SERVICE THE EQUIPMENT. IMPROPER SUPERVISION, INSTALLATION, ADJUSTMENT, SERVICING, MAINTENANCE OR REPAIR OF THE EQUIPMENT SPECIFIED IN THIS MANUAL, OR ATTEMPTING TO INSTALL, ADJUST, SERVICE OR REPAIR THE EQUIPMENT SPECIFIED IN THIS MANUAL WITHOUT PROPER SUPERVISION OR TRAINING MAY RESULT IN PRODUCT DAMAGE, PROPERTY DAMAGE, PERSONAL INJURY OR DEATH.

RSD6612304r1
April 2026

Copyright © 2025 - 2026 Daikin Comfort Technologies Manufacturing, Inc.

19001 Kermier Rd. Waller, TX 77484

IMPORTANT INFORMATION

WARNING

THIS FURNACE MAY BE PAIRED WITH A COOLING UNIT THAT USES R-32 REFRIGERANT. IF THE COOLING UNIT PAIRED WITH THIS FURNACE DOES NOT USE R-32, THE R-32 FUNCTION IN THE FURNACE CONTROL BOARD NEEDS TO BE TURNED OFF. PLEASE SEE THE ELECTRICAL AND THE R-32 SECTIONS FOR MORE DETAILS.

REFRIGERANT SYSTEMS OTHER THAN 410A OR R32 MAY REQUIRE AN ADDITIONAL MITIGATION CONTROL BOARD. REFER TO THE INSTALLATION MANUAL OF THE INDOOR EVAPORATOR COIL TO DETERMINE INSTALLATION REQUIREMENTS FOR THAT SUPPLIER'S REFRIGERANT DETECTION SYSTEM.

WARNING

HIGH VOLTAGE
DISCONNECT ALL POWER BEFORE SERVICING OR INSTALLING THIS UNIT. MULTIPLE POWER SOURCES MAY BE PRESENT. FAILURE TO DO SO MAY CAUSE PROPERTY DAMAGE, PERSONAL INJURY OR DEATH.

WARNING

THIS UNIT SHOULD NOT BE CONNECTED TO, OR USED IN CONJUNCTION WITH, ANY DEVICES THAT ARE NOT DESIGN CERTIFIED FOR USE WITH THIS UNIT OR HAVE NOT BEEN TESTED AND APPROVED BY THE MANUFACTURER. SERIOUS PROPERTY DAMAGE OR PERSONAL INJURY, REDUCED UNIT PERFORMANCE AND/OR HAZARDOUS CONDITOINS MAY RESULT FROM THE USE OF DEVICES THAT HAVE NOT BEEN APPROVED OR CERTIFIED BY THE MANUFACTURER.

WARNING

IF THE INFORMATION IN THESE INSTRUCTIONS IS NOT FOLLOWED EXACTLY, A FIRE OR EXPLOSION MAY RESULT CAUSING PROPERTY DAMAGE, PERSONAL INJURY OR LOSS OF LIFE.

– DO NOT STORE OR USE GASOLINE OR OTHER FLAMMABLE VAPORS AND LIQUIDS IN THE VICINITY OF THIS OR ANY OTHER APPLIANCE.

– WHAT TO DO IF YOU SMELL GAS:
- DO NOT TRY TO LIGHT ANY APPLIANCE.
- DO NOT TOUCH ANY ELECTRICAL SWITCH; DO NOT USE ANY PHONE IN YOUR BUILDING.
- IMMEDIATELY CALL YOUR GAS SUPPLIER FROM A NEIGHBOR'S PHONE. FOLLOW THE GAS SUPPLIER'S INSTRUCTIONS.
- IF YOU CANNOT REACH YOUR GAS SUPPLIER, CALL THE FIRE DEPARTMENT.

– INSTALLATION AND SERVICE MUST BE PERFORMED BY A QUALIFIED INSTALLER, SERVICE AGENCY OR THE GAS SUPPLIER.

DANGER
PELIGRO

CARBON MONOXIDE POISONING HAZARD

Special Warning for Installation of Furnace or Air Handling Units in Enclosed Areas such as Garages, Utility Rooms or Parking Areas

Carbon monoxide producing devices (such as an automobile, space heater, gas water heater, etc.) should not be operated in enclosed areas such as unventilated garages, utility rooms or parking areas because of the danger of carbon monoxide (CO) poisoning resulting from the exhaust emissions. If a furnace or air handler is installed in an enclosed area such as a garage, utility room or parking area and a carbon monoxide producing device is operated therein, there must be adequate, direct outside ventilation.

This ventilation is necessary to avoid the danger of CO poisoning which can occur if a carbon monoxide producing device continues to operate in the enclosed area. Carbon monoxide emissions can be (re)circulated throughout the structure if the furnace or air handler is operating in any mode.

CO can cause serious illness including permanent brain damage or death. B10259-216

RIESGO DE INTOXICACIÓN POR MONÓXIDO DE CARBONO

Advertencia especial para la instalación de calentadores ó manejadoras de aire en áreas cerradas como estacionamientos ó cuartos de servicio.

Los equipos ó aparatos que producen monóxido de carbono (tal como automóvil, calentador de gas, calentador de agua por medio de gas, etc) no deben ser operados en áreas cerradas debido al riesgo de envenenamiento por monóxido de carbono (CO) que resulta de las emisiones de gases de combustión. Si el equipo ó aparato se opera en dichas áreas, debe existir una adecuada ventilación directa al exterior.

Esta ventilación es necesaria para evitar el peligro de envenenamiento por CO, que puede ocurrir si un dispositivo que produce monóxido de carbono sigue operando en el lugar cerrado.

Las emisiones de monóxido de carbono pueden circular a través del aparato cuando se opera en cualquier modo.

El monóxido de carbono puede causar enfermedades severas como daño cerebral permanente ó muerte. B10259-216

RISQUE D'EMPOISONNEMENT AU MONOXYDE DE CARBONE

Avertissement special au sujet de l'installation d'appareils de chauffage ou de traitement d'air dans des endroits clos, tets les garages, les locaux d'entretien et les stationnements.

Evitez de mettre en marche les appareils produisant du monoxyde de carbone (tels que les automobile, les appareils de chauffage autonome,etc.) dans des endroits non ventilés tels que les d'empoisonnement au monoxyde de carbone. Si vous devez faire fonctionner ces appareils dans un endroit clos, assures-vous qu'il y ait une ventilation directe provenant de l'exterier.

Cette ventilation est nécessaire pour éviter le danger d'intoxication au CO pouvant survenir si un appareil produisant du monoxyde de carbone continue de fonctionner au sein de la zone confinée.

Les émissions de monoxyde de carbone peuvent etre recircules dans les endroits clos, si l'appareil de chauffage ou de traitement d'air sont en marche.

Le monoxyde de carbone peut causer des maladies graves telles que des dommages permanents au cerveau et meme la mort. B10259-216

WARNING

TO PREVENT THE RISK OF PROPERTY DAMAGE, PERSONAL INJURY, OR DEATH, DO NOT STORE COMBUSTIBLE MATERIALS OR USE GASOLINE OR OTHER FLAMMABLE LIQUIDS OR VAPORS IN THE VICINITY OF THIS APPLIANCE.

WARNING

SHOULD OVERHEATING OCCUR OR THE GAS SUPPLY FAIL TO SHUT OFF, TURN OFF THE MANUAL GAS SHUTOFF VALVE EXTERNAL TO THE FURNACE BEFORE TURNING OFF THE ELECTRICAL SUPPLY.

OUTSIDE THE U.S., **call 1-713-861-2500**.
(Not a technical assistance line for dealers.) Your telephone company will bill you for the call.

PRODUCT IDENTIFICATION NOMENCLATURE

D	R	96	T	N	060	3	B	N	A	A
1	2	3,4	5	6	7,8,9	10	11	12	13	14

Brand
D - Daikin

Configuration
M - Upflow/Horizontal R410A
C - Downflow/Horizontal R410A
R- Upflow/ Horizontal R32
D - Downflow/Horizontal R32

AFUE
80 - 80% AFUE
92 - 92% AFUE
96 - 96% AFUE
97 - 97% AFUE

Gas Valve
S- Single Stage
T- Two Stage

MOTOR
C - Variable-Speed ECM / Communicating
N - Multi-Speed ECM (9 taps) / Non-Communicating

MBTU/h
030 - 30,000 BTU/h 080 - 80,000 BTU/h
040 - 40,000 BTU/h 100 - 100,000 BTU/h
060 - 60,000 BTU/h 120 - 120,000 BTU/h

Minor Revision
A - Initial Release
B - 1st Revision

Major Revision
A - Initial Release
B - 1st Revision

NOx
N - Natural Gas ≥ 40 NG/JNOx
N - Low NOx (90%+) ≤ 40 NG/JNOx
X- Low NOx (80%) ≤ 40 NG/JNOx
U - Ultra Low NOx ≤ 14 NG/JNOx

Cabinet Width
A - 14"
B - 17.5"
C - 21"
D - 24.5"

Maximum CFM
3 - 1200 CFM
4 - 1600 CFM
5 - 2000 CFM

SYSTEM OPERATION

CAUTION

EDGES OF SHEET METAL HOLES MAY BE SHARP. USE GLOVES AS PRECAUTION WHEN REMOVING HOLE PLUGS.

115 VOLT LINE CONNECTION OF ACCESSORIES (HUMIDIFIER AND ELECTRONIC AIR CLEANER)

The furnace integrated control module is equipped with line voltage accessory terminals for controlling power to an optional field-supplied humidifier and/or electronic air cleaner.

The accessory load specifications are noted in the chart below:

Humidifier	1.0 Amp maximum at 120 VAC
Electronic Air Cleaner	1.0 Amp maximum at 120 VAC

Turn OFF power to the furnace before installing any accessories. Follow the humidifier or air cleaner manufacturers' instructions for locating, mounting, grounding, and cotrolling these accessories. Accessory wiring connections are to be made through the 1/4" quick connect terminals provided on the furnace integrated control module. The humidifier and electronic air cleaner hot terminals are identified as HUM H and EAC H. The humidifier and electronic air cleaner neutral terminals are identified as NEUTRAL. All field wiring must conform to applicable codes. Connections should be made as shown.

If it is necessary for the installer to supply additional line voltage wiring to the inside of the furnace, the wiring must conform to all local codes, and have a minimum temperature rating of 105°C. All line voltage wire splices must be made inside the furnace junction box.

The integrated control module humidifier terminal (HUM H) is energized with 115 volts whenever the induced draft blower is energized. The integrated control module electronic air cleaner terminal (EAC H) is energized with 115 volts whenever the circulator blower is energized. This terminal can also be used to provide 115 volt power to a humidifier transformer. The remaining primary transformer wire would be connected to the Line N on the control board.

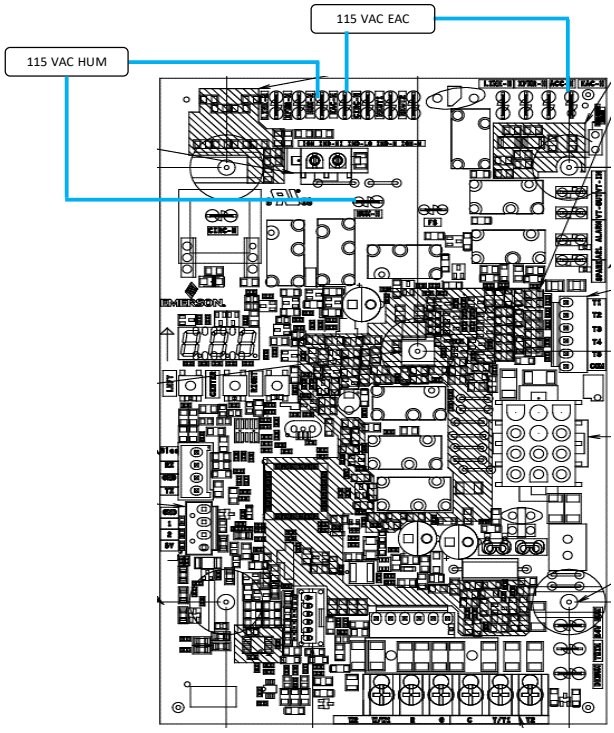

ACCESSORIES - ACCESSORIES WIRING
FIGURE 7

LOW VOLTAGE HUMIDIFIER

The furnace integrated control module is equipped with a low voltage terminal for providing power to an optional field-supplied 24 volt humidifier. The 24V HUM terminal is energized any time the draft inducer is powered. See connection diagram below.

NOTE: This is a 24 volt circuit only, the common connection must be on C terminal of the low voltage terminal strip (where thermostat wires are connected). Wiring for this circuit must NOT be connected to the line N location where line voltage neutral wires are connected.

LOW VOLTAGE VENTILATION

The Ventilation connections provide dry contact for field ventilator wiring connections. These connections are normally open and energize during the R-32 fault/alarm condition. VT IN and VT OUT connections are provided on the control board and are shown in the image below.

LOW VOLTAGE A2L ALARM

The A2L alarm connection provides 24VAC for field alarm wiring connections. These connections are normally open and energize during the R-32 fault/alarm condition. An A2L Alarm connection is provided on the control board and is shown in the image below.

SYSTEM OPERATION

Field Installed Accessories

Additional accessories that do not have dedicated terminals on the furnace control board may require an additional daughter board to be installed. Please refer to the instructions on the accessory daughter board for additional information.

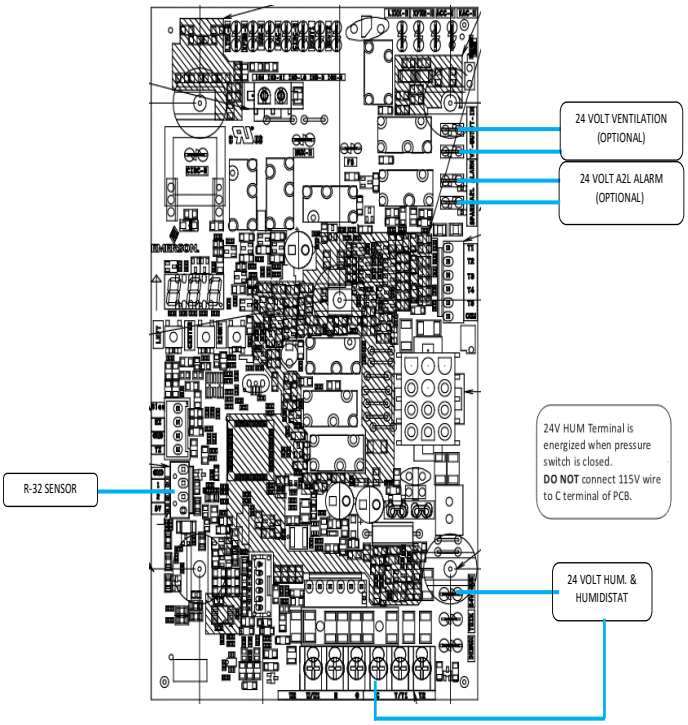

24 Volt Humidifier Connection
Figure 8

NOTE: This furnace is equipped with a control board that is capable of monitoring for R-32 refrigerant leaks in the indoor refrigeration unit. Please verify that the R-32 sensor wire is plugged in to the furnace control board before startup, if applicable. If furnace is not paired with an R-32 Refirgeration system, the default settings in the furnace control board will need to be changed. Please see the R-32 section for additional information.

Gas Heat Sequence of Operation

Call for 1st Stage Heat

- On a call for heat, the thermostat contacts close & the control board receives 24 VAC on the W1 terminal.
- The control board microcomputer runs its self-check routine.
- The control verifies the limit switch is closed (24 VAC on Pin 8 of the 12 Pin connector).
- The control verifies that pressure switch circuit is open (0 VAC on Pin 5).
- The control module performs a gas valve circuitry check to verify gas valve relay state and presence of voltage at the valve.
- The system will energize the Induced draft blower.
- The pre-purge period begins once the low fire pressure switch is detected closed (24 VAC on Pin 5).
- After the completion of pre-purge, the control will energize the igniter.
- After completion of the ignitor warm-up period:
- The gas valve is energized.
- The ignitor is de-energized as soon as flame is sensed.
- After 30 seconds the indoor blower is energized on heating speed.
- When using a single-stage heating thermostat, the furnace will transition to 2nd stage gas heat by either a fixed time or auto mode depending on menu selections made by the installer.
- The inducer motor is enabled at high speed.
- Closure of the 2nd stage pressure switch will energize the high fire stage of the gas valve.
- The 2nd stage gas heat speed of the indoor blower is energized
- When the thermostat is satisfied:
- The gas valve is de-energized.
- The inducer remains energized for the post purge period (15 seconds).
- The indoor blower runs for the selected off delay period (90 seconds by default, adjustable from 30 – 180 seconds).

Call for 2nd Stage Heat During 1st Stage Heat Operation

- The control board receives a 24 VAC signal on the W2 terminal.
- The inducer motor is enabled at high speed.
- Closure of the 2nd stage pressure switch will energize the high fire stage of the gas valve.
- The 2nd stage gas heat speed of the indoor blower is energized.

Heating Mode Speed Selection

To change the main blower speed in HEATING mode, follow the following steps:

1. Press the left or right button until LED displays “gA1” (for single-stage HEATING) or “gA2” (for two-stage HEATING). Press the center button and LED will display the selected speed number as Fxx (xx: Blower speed number).
2. The control will rotate available speed number every time left / right buttons are pressed. The table below shows the available speeds for low & high heat mode.
3. Press the center button to save the selection.

NOTE: Always refer to the Heating Chart to choose from available heating speeds

SYSTEM OPERATION

THERMOSTAT CALL	AVAILABLE SPEEDS
W/W1	F01 (DEFAULT)
	F03
	F04
W2	F02 (DEFAULT)
	F04
	F05

One and Two-Stage Heating Speed Table for 2 Stage IFC

Continuous Fan Mode Speed Selection

To change the main blower speed in circulation mode, follow the following steps:

1. Press the left or right button until LED displays "FSd". Press the center button and LED will display the selected speed number as Fxx (xx: Blower speed number from 1 to 9). F03 is the default speed for circulation.
2. The control will rotate available speed number every time left/right buttons are pressed. All 9 speeds are available for circulation.
3. When the center button is pressed, the current displayed speed will be selected, and control will immediately apply that speed setting.

THERMOSTAT CALL	AVAILABLE SPEEDS
G	F01
	F02
	F03 (DEFAULT)
	F04
	F05
	F06
	F07
	F08
	F09

Circulation Speed Table for 2 Stage IFC

Cooling Mode Sequence of Operation

Low Stage Cooling Mode Sequence:

On a call for low stage cooling, the Y/Y1 or Y/Y1 and G thermostat contacts close signaling the furnace control board with 24 VAC on Y/Y1 or Y/Y1 and G terminals.

- The 7-Segment will display the cool mode: 1 A C
- The compressor and condenser fan are energized.
- The circulator fan is energized at low cool speed after a cool on delay. The electronic air cleaner will also be energized.
- After the thermostat is satisfied, the compressor is de-energized and the Cool Mode Fan Off Delay period begins.
- Following the Cool Mode Fan Off Delay period, the cool circulator and air cleaner relay are de-energized.

2nd Stage Cooling Mode Sequence:

On a call for 2nd stage cooling, the Y2 or Y2 and G thermostat contacts close signaling the furnace control board with 24 VAC on Y2 or Y2 and G terminals.

- The 7-Segment will display the cool mode: 2 A C
- The compressor and condenser fan are energized.
- The circulator fan is energized at cool speed after a cool on delay. The electronic air cleaner will also be energized.
- After the thermostat is satisfied, the compressor is de-energized and the Cool Mode Fan Off Delay period begins.
- Following the Cool Mode Fan Off Delay period, the cool circulator and air cleaner relay are de-energized

Cooling Mode Speed Selection

To change the main blower speed in COOLING mode, follow the following steps:

1. Press the left or right button until LED displays "AC1 "(for single stage COOLING) or "AC2 "(for two-stage COOLING). Press the center button and LED will display the selected speed number as Fxx (xx: Blower speed number from 1 to 9).
2. The control will rotate available speed number every time left/right buttons are pressed. All 9 speeds are available for both Single and Two Stage cooling.
3. When the center button is pressed, the current displayed speed will be selected, and control will apply the newly selected speed in next cooling call.

THERMOSTAT CALL	AVAILABLE SPEEDS
Y/Y1	F01
	F02
	F03
	F04 (DEFAULT)
	F05
	F06
	F07
	F08
	F09

Single-Stage Cooling Speed Table for 2 Stage IFC

SYSTEM OPERATION

THERMOSTAT CALL	AVAILABLE SPEEDS
Y2	F01
	F02
	F03
	F04
	F05 (DEFAULT)
	F06
	F07
	F08
	F09

Two-Stage Cooling Speed Table for 2 Stage IFC

R-32 INFORMATION

R-32 Function

This furnace is equipped with a control board that is capable of shutting off the gas heat and turning on the blower fan in case of an R-32 refrigerant leak in the indoor evaporator coil. If the cooling unit that is paired with this furnace does not utilize R-32 as the refrigerant, the R-32 functionalities in the furnace control board will need to be turned off for the furnace to run properly.

R-32 function on the control board is ON by default. The R-32 function can be disabled through the furnace control by entering the A2L Function Enabled menu and selecting “”no””. If A2L function is disabled, the furnace control will ignore all A2L functions. If A2L function is enabled, the control will monitor the R-32 sensor information.

To enter the A2L Function Enabled menu, press the left or right button until LED displays “A2E”. Press the center button and the LED will display the selected option (yes or no). Press the left or right button to select one of the two options and press the center button to confirm the option.

R-32 Sensor Wire Routing

Important Note: Wiring routing must not interfere with circulator blower operation, filter removal or routine maintenance. Wire should not be routed near hot surfaces and should be protected from sharp edges. Extra precaution should be taken to avoid routing near the outlet flue pipe.

The R-32 Sensor wire coming from the indoor evaporator coil will need to be routed into the furnace and connected to the connection point on the furnace control board. This wire should be routed alongside the thermostat wires through the low voltage openings in the left or right side of the furnace blower compartment. Please see the electrical section for the location of the R-32 Sensor connection on the control board.

R-32 Refrigerant Leak

If the R-32 sensor on theindoor evaporator coil detects a specified concentration of R-32 refrigerant, the furnace will enter Mitigation Mode to dilute the refrigerant concentrations in case of a leak. In Mitigation Mode, the furnace will do the following:
1) Display the A2L Refrigerant Leakage error code (EAL)
2) Shut down the gas operation
3) Energize the optional ventilation and alarm outputs.
4) Run the fan at max CFM airflow

Once the R-32 sensor stops detecting a leak, the fan will continue to run for 5 minutes. After the 5 minutes, if there are no other alarms or faults, the control will de-energize the optional ventilation and alarm outputs and then go back to the original operating mode per the thermostat.

A2L Verification

The A2L Function Verification menu allows the installer to verify if the R-32 function operates properly. This menu simulates the refrigerant leak process and is only able to be used when there are no active alarms or faults. To verify the R-32 functions, enter the A2L Function Verification menu and select “”YES””. To enter the A2L Function Verification menu, press the left or right button until LED displays “A2u”. Press the center button and the LED will display the selected option (yes or no). Press the left or right button to select one of the two options and press the center button to confirm the option.

Once “”YES”” is selected, the furnace will do the following:
1) Display the A2L Refrigerant Leakage code (EAL)
2) Shut down the gas operation
3) Energize the optional ventilation and alarm outputs.
4) Run the fan at max CFM airflow

The control will exit the verification function if:
1) The 5 minute timeout expires or
2) An alarm or fault is detected or
3) The user turns OFF the A2L Function Verification.”

SCHEDULED MAINTENANCE

WARNING

HIGH VOLTAGE
DISCONNECT ALL POWER BEFORE SERVICING OR INSTALLING THIS UNIT. MULTIPLE POWER SOURCES MAY BE PRESENT. FAILURE TO DO SO MAY CAUSE PROPERTY DAMAGE, PERSONAL INJURY OR DEATH.

CAUTION

IF YOU MUST HANDLE THE ITNITOR, HANDLE WITH CARE. TOUCHING THE IGNITOR BODY WITH BARE FINGERS, ROUGH HANDLING, OR VIBRATION COULD RESULT IN EARLY IGNITOR FAILURE. ONLY A QUALIFIED SERVICER SHOULD EVER HANDLE THE IGNITOR.

ANNUAL INSPECTION

The furnace should be inspected by a qualified installer, or service agency at least once per year. This check should be performed at the beginning of the heating season. This will ensure that all furnace components are in proper working order and that the heating system functions appropriately. Pay particular attention to the following items. Repair or service as necessary.

- Flue pipe system. Check for blockage and/or leakage. Check the outside termination and the connections at and internal to the furnace.
- Combustion air intake pipe system (where applicable). Check for blockage and/or leakage. Check the outside termination and the connection at the furnace.
- Heat exchanger. Check for corrosion and/or buildup within the heat exchanger passageways.
- Burners. Check for proper ignition, burner flame, and flame sense.
- Drainage system. Check for blockage and/or leakage. Check hose connections at and internal to furnace.
- Wiring. Check electrical connections for tightness and/or corrosion. Check wires for damage.
- Filters.
- R-32 Sensor Wire. Check R-32 Sensor wire connection for tightness and check wire for damages.

AIR FILTER

WARNING

NEVER OPERATE FURNACE WIHTOUT A FILTER INSTALLED AS DUST AND LINT WILL BUILD UP ON INTERNAL PARTS RESULTING IN LOSS OF EFFICIENCY, EQUIPMENT DAMAMGE, AND POSSIBLE FIRE.

Filters must be used with this furnace. Filters do not ship with these furnaces but must be provided by the installer for proper furnace operation.
Remember that dirty filters are the most common cause of inadequate heating or cooling performance.

WARNING

HIGH VOLTAGE
DISCONNECT ALL POWER BEFORE SERVICING, REMOVING THE FILTER OR PREFORING ANY OTHER MAINTENEACE. MULTIPLE POWER SOURCES MAY BE PRESENT. FAILURE TO DO SO MAY CAUSE PROPERTY DAMAGE, PERSONAL INJURY OR DEATH.

MAINTENANCE

Improper filter maintenance is the most common cause of inadequate heating or cooling performance. Filters should be cleaned (permanent) or replaced (disposable) every two months or as required. It is the owner's responsibility to keep air filters clean. When replacing a filter, it must be replaced with a filter of the same type and size.

FILTER REMOVAL

Depending on the installation, differing filter arrangements can be applied. Filters can be installed in the central return register, the bottom of the blower compartment (upflow only). A media air filter or electronic air cleaner can be used as an alternate filter. The filter sizes given in the *Product Design* section of this manual or the product *Specification Sheet* must be followed to ensure proper unit performance. Refer to the following information for removal and installation of filters.

FILTER REMOVAL PROCEDURE

Media Air Filter or Electronic Air Cleaner Removal

Follow the manufacturer's directions for service.

Horizontal Unit Filter Removal

Filters in horizontal installations are located in the central return register.

INDUCED DRAFT AND CIRCULATION BLOWERS

The bearings in the induced draft blower and circulator blower motors are permanently lubricated by the manufacturer. No further lubrication is required. Check motor windings for accumulation of dust which may cause overheating. Clean as necessary.

CONDENSATE DRAINAGE SYSTEM (QUALIFIED SERVICER ONLY)

The drain tubes, standpipe, and field supplied drain line must be checked annually and cleaned as often as necessary to ensure proper condensate drainage.

FLAME SENSOR (QUALIFIED SERVICER ONLY)

Under some conditions, the fuel or air supply can create a nearly invisible coating on the flame sensor. This coating acts as an insulator, causing a drop in the flame sensing signal. If this occurs, a qualified servicer must carefully clean the flame sensor with steel wool.

SCHEDULED MAINTENANCE

BURNERS

WARNING

HIGH VOLTAGE

ELECTRICAL COMPONENTS ARE CONTAINED IN BOTH COMPARTMENTS. TO AVOID ELECTRICAL SHOCK, INJURY OR DEATH, DO NOT REMOVE ANY INTERNAL COMPARTMENT COVERS OR ATTEMPT ANY ADJUSTMENT. CONTACT A QUALIFIED SERVICE AGENT AT ONCE IF AN ABNORMAL FLAME APPEARANCE SHOULD DEVELOP.

Periodically during the heating season make a visual check of the burner flames. Turn the furnace on at the thermostat. Wait a few minutes since any dislodged dust will alter the normal flame appearance. Flames should be stable, quiet, soft and blue with slightly orange tips. They should not be yellow. They should extend directly outward from the burner ports without curling downward, floating or lifting off the ports.

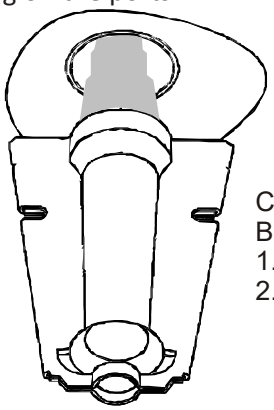

Check the
Burner Flames for:
1. Stable, soft and blue.
2. Not curling, floating or lifting off.

BURNER FLAME

HEATING PERFORMANCE TEST

Before attempting to diagnose an operating fault code, run a Heating Performance Test to determine if the heating system is performing within 5% of the BTU input found on the rating plate of the unit being tested. To conduct a heating performance test, the BTU input to the unit must be calculated (see Clocking a Gas Meter). Before clocking a gas meter, contact your local utility to provide the caloric value (BTU content) of the natural gas in the area.
It is also important to confirm the airflow (CFM) is within the temperature rise range (see Airflow Data in spec sheet) and external static pressure range (approximately 0.5” water column). How-to instructions can be found in the service manual under Checking External Static Pressure and Checking Temperature Rise.

CLOCKING A GAS METER

1. Turn off all gas appliances in the home.
2. Turn on the furnace. Ensure the furnace is operating at a 100% firing rate on 2 stage and modulating furnace product.
3. Once heating cycle is at a steady state (typically 15 minutes of operation), use a stopwatch to time how long it takes the smallest unit of measure dial on the gas meter to make a full revolution. In Table 1, one cubic foot is selected. The smallest unit of measure will vary depending on the gas meter.

SCHEDULED MAINTENANCE

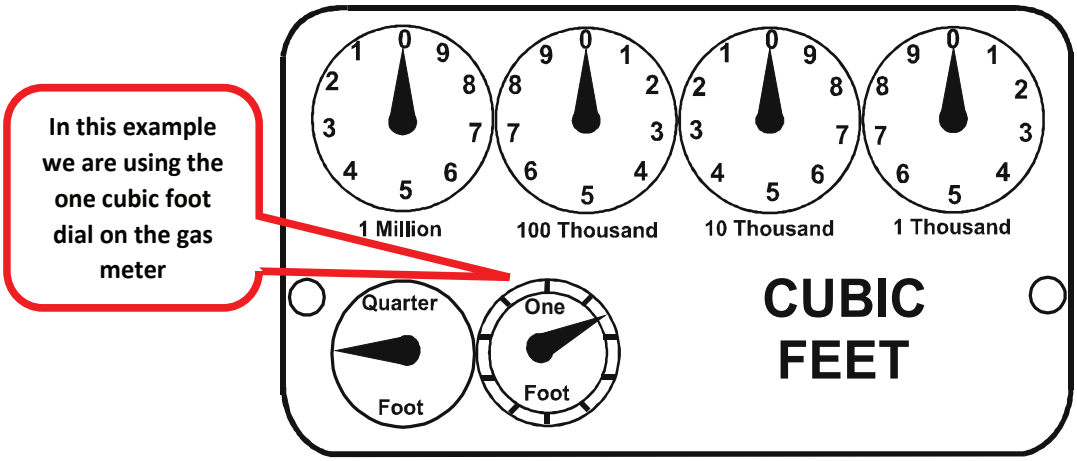

TABLE 1

4. Using Table 2 below, find the number of seconds it took for the dial to make a full revolution. To the right of that number of seconds and below the Size of Test Dial (selected in step 3 and shown in Table 1) will be the Cubic Feet per Hour (CFH).

Locate 40 seconds for one revolution in the chart below

Then locate the 1 cu ft dial column and select the corresponding CFH from the 40 seconds for one revolution row

GAS RATE -- CUBIC FEET PER HOUR

Seconds for One Revolution	Size of Test Dial					Seconds for One Revolution	Size of Test Dial				
	1/4 cu/ft	1/2 cu/ft	1 cu/ft	2 cu/ft	5 cu/ft		1/4 cu/ft	1/2 cu/ft	1 cu/ft	2 cu/ft	5 cu/ft
10	90	180	360	720	1800	36	25	50	100	200	500
11	82	164	327	655	1636	37	--	--	97	195	486
12	75	150	300	600	1500	38	23	47	95	189	474
13	69	138	277	555	1385	39	--	--	92	185	462
14	64	129	257	514	1286	40	22	45	90	180	450
15	60	120	240	480	1200	41	--	--	--	176	439
16	56	113	225	450	1125	42	21	43	86	172	429
17	53	106	212	424	1059	43	--	--	--	167	419
18	50	100	200	400	1000	44	--	41	82	164	409
19	47	95	189	379	947	45	20	40	80	160	400
20	45	90	180	360	900	46	--	--	78	157	391
21	43	86	171	343	857	47	19	38	76	153	383
22	41	82	164	327	818	48	--	--	75	150	375
23	39	78	157	313	783	49	--	--	--	147	367
24	37	75	150	300	750	50	18	36	72	144	360
25	36	72	144	288	720	51	--	--	--	141	355
26	34	69	138	277	692	52	--	--	69	138	346
27	33	67	133	265	667	53	17	34	--	136	340
28	32	64	129	257	643	54	--	--	67	133	333
29	31	62	124	248	621	55	--	--	--	131	327
30	30	60	120	240	600	56	16	32	64	129	321
31	--	--	116	232	581	57	--	--	--	126	316
32	28	56	113	225	563	58	--	31	62	124	310
33	--	--	109	218	545	59	--	--	--	122	305
34	26	53	106	212	529	60	15	30	60	120	300
35	--	--	103	206	514						

TABLE 2

5. Use this formula to verify the Cubic Feet per Hour (CFH) input determined in step 4 is correct:

(3600 x Gas Meter Dial Size) / Time (seconds) = Cubic Feet per Hour (CFH)

3600 is used as there are 60 seconds in a minute and 60 minutes in an hour. 60x60=3600

SCHEDULED MAINTENANCE

6. Check with your local utility for actual BTU content (caloric value) of natural gas in the area (the average is 1025 BTU's).
7. Use this formula to calculate the BTU/HR input (See BTU/HR Calculation Example):

Cubic Feet per Hour (CFH) x BTU content of your natural gas = BTU/HR input

8. Should the figure you calculated not fall within five (5) percent of the nameplate rating of the unit, adjust the gas valve pressure regulator or resize orifices. To adjust the pressure regulator on the gas valve, turn downward (clockwise) to increase pressure and input, and upward (counterclockwise) to decrease pressure and input. A properly operating unit must have the BTU per hour input and CFM of air, within the limits shown to prevent short cycling of the equipment. As the external static pressure goes up, the temperature rise will also increase. Consult the proper tables for temperature rise limitation.

BTU/HR Calculation Example:

The unit being tested takes 40 seconds for the 1 cubic foot dial to make one complete revolution. Using the chart, this translates to 90 cubic feet per hour. Based upon the assumption that one cubic foot of natural gas has 1,025 BTU's (Check with your local utility for actual BTU content), the **calculated input is 92,250 BTU's per hour.**

Furnace Nameplate Input in this example: 90,000 BTU/HR

Calculated Gas Input in this example: 92,250 BTU/HR

This example is within the 5% tolerance input and does not need adjustment.

SERVICING

As more and more electronic's are introduced to the Heating Trade, Polarization of incoming power and phasing of primary to secondary voltage on transformers becomes more important.

Polarization has been apparent in the Appliance industry since the introduction of the three prong plug, however, the Heating Industry does not use a plug for incoming power, but is hard wired.

Some of the electronic boards being used today, with flame rectification, will not function properly and/or at all without polarization of incoming power. Some also require phasing between the primary and secondary sides of step-down transformers.

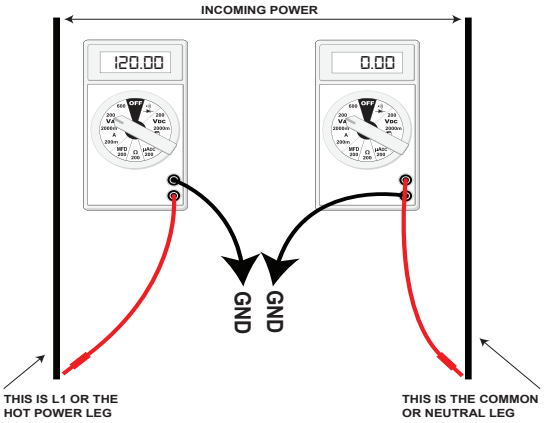

These then should be wired to the furnace accordingly.

CHECKING FOR PHASING - PRIMARY TO SECONDARY OF UNMARKED TRANSFORMERS*

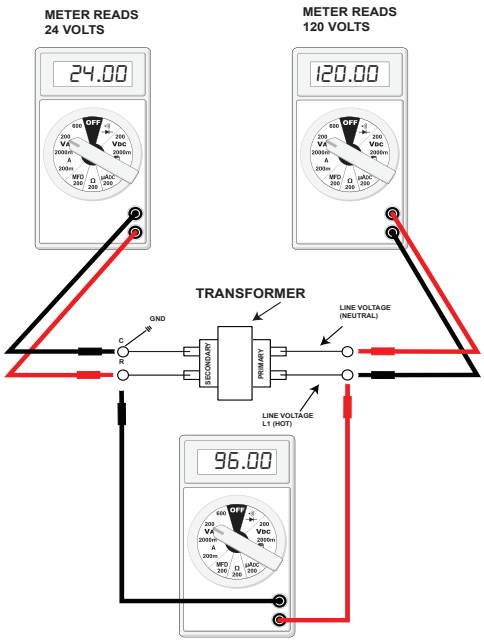

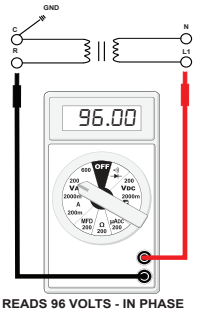

READS 96 VOLTS - IN PHASE

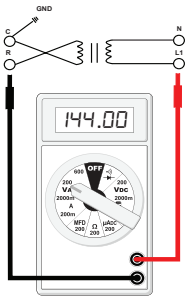

READS 144 VOLTS - OUT OF PHASE

If meter reads approximately 96 volts - the primary to secondary are in phase - if reads approximately 144 volts out of phase - reverse low voltage wires.

***NOTE:** For flame rectification the common side of the secondary voltage (24 V) is cabinet grounded. If you were to bench test a transformer the primary neutral and secondary common must be connected together for testing purposes.

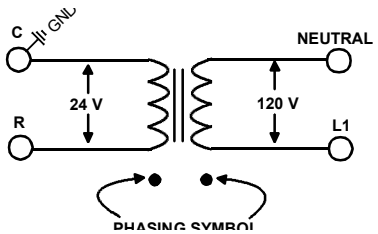

Some transformers will display phasing symbols as shown in the illustration to the left to assist in determining proper transformer phasing.

Checking for polarization and phasing should become a habit in servicing. Let's start now.

SERVICING

Checking Voltage

WARNING

HIGH VOLTAGE
Disconnect ALL power before servicing or changing any electrical wiring. Multiple power sources may be present. Failure to do so may cause property damage, personal injury or death.

1. Remove cover from the Junction box and gain access to incoming power lines.

With power ON:

WARNING

Line voltage now present

2. Using a voltmeter, measure the voltage across the hot and neutral connections.

NOTE: To energize the furnace, the Door Interlock Switch must be engaged at this point.

3. No reading - indicates open wiring, open fuse, no power, or faulty Door Interlock Switch from unit to fused disconnect service. Repair as needed.
4. With ample voltage at line voltage connectors, energize the furnace blower motor by jumpering terminals R to G on the integrated ignition control.
5. With the blower motor in operation, the voltage should be 120 volts ± 10 percent.
6. If the reading falls below the minimum voltage, check the line wire size. Long runs of undersized wire can cause low voltage. If wire size is adequate, notify the local power company of the condition.
7. After completing check and/or repair, replace Junction Box cover and reinstall the service panel doors.
8. Turn on electrical power and verify proper unit operation.

Checking Wiring

WARNING

Disconnect ALL power before servicing.

1. Check wiring visually for signs of overheating, damaged insulation and loose connections.
2. Use an ohmmeter to check continuity of any suspected open wires.
3. If any wires must be replaced, replace with AWM, 105°C. 2/64 thick insulation of the same gauge or its equivalent.

Checking Thermostat and Wiring

WARNING

Disconnect ALL power before servicing.

1. Remove the blower compartment door to gain access to the thermostat low voltage wires located at the furnace integrated control module terminals.
2. Remove the thermostat low voltage wires at the furnace control panel terminal board.
3. Jumper terminals R to W (or W1 and W2 for two-stage models) on the integrated ignition control.

With power ON (and Door Interlock Switch closed):

WARNING

Line voltage now present

4. Induced Draft Motor must run and pull in pressure switch.
5. If the hot surface ignitor heats and at the end of the ignitor warm-up period the gas valve opens and the burners ignite, the trouble is in the thermostat or wiring.
6. With power off, check the continuity of the thermostat and wiring. Repair or replace as necessary.

If checking the furnace in the air conditioning mode, proceed as follows.

7. With power off, Jumper terminals R to Y
8. Turn on the power.
9. If the furnace blower motor starts and the condensing unit runs, then the trouble is in the thermostat or wiring. Repair or replace as necessary.
10. After completing check and/or repair of wiring and check and/or replacement of thermostat, reinstall blower compartment door.
11. Turn on electrical power and verify proper unit operation.

Checking Transformer and Control Circuit

WARNING

HIGH VOLTAGE
Disconnect ALL power before servicing or changing any electrical wiring. Multiple power sources may be present. Failure to do so may cause property damage, personal injury or death.

SERVICING

A step-down transformer 120 volt primary to 24 volt secondary, 40 VA (Heating and Cooling Models) supplies ample capacity of power for either operation.

WARNING

DISCONNECT ALL POWER BEFORE SERVICING.

1. Remove blower compartment door to gain access to the thermostat low voltage wires located at the furnace integrated control module.
2. Remove the thermostat low voltage wires at the furnace integrated control module terminals.

With power ON (and Door Interlock Switch closed):

WARNING

LINE VOLTAGE NOW PRESENT

3. Use a voltmeter, check voltage across terminals R and C. Must read 24 VAC.
4. No voltage indicates faulty transformer, open fuse, bad wiring, bad splice, or open door interlock switch.
5. Check transformer primary voltage at incoming line voltage connections, fuse, splices, and blower door interlock switch.
6. If line voltage is available to the primary side of transformer and not at secondary side, the transformer is inoperative. Replace.
7. After completing check and/or replacement of transformer and check and/or repair of control circuit, reinstall blower compartment door.
8. Turn on electrical power and verify proper unit operation.

WARNING

HIGH VOLTAGE
DISCONNECT ALL POWER BEFORE SERVICING OR INSTALLING THIS UNIT. MULTIPLE POWER SOURCES MAY BE PRESENT. FAILURE TO DO SO MAY CAUSE PROPERTY DAMAGE, PERSONAL INJURY OR DEATH.

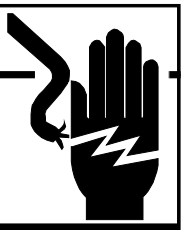

CHECKING AIR CIRULATOR BLOWER MOTOR (NINE-SPEED ECM MOTOR)

WARNING

DISCONNECT ALL POWER BEFORE SERVICING.

1. Remove blower compartment door to gain access to the circulator blower motor and integrated ignition control.
2. Check for any obstruction that would keep the fan wheel / fan motor from turning.
3. The nine-speed ECM motor requires a line voltage power supply (black connected to CIRC H and white connected to CIRC-N on the control board) as well as a signal on one of the speed taps (T1-T5).
4. The speed tap voltage is 6-17 vDC and can vary depending on speed selection. The voltage reading from any one of the speed taps is referenced between the female COM terminal next to the speed taps on the control board.

9-Tap Blower Motor Connector Description

CONNECTOR ID	DESCRIPTION	CONNECTOR VOLTAGE (REFERENCE)
L	LINE, L1	LINE, L1
G	GROUND	CHASSIS GROUND
N	LINE, L2	LINE, L2
C	SIGNAL COMMON	COMMON
1	TAP 1	6 - 17 VDC
2	TAP 2	6 - 17 VDC
3	TAP 3	6 - 17 VDC
4	TAP 4	6 - 17 VDC
5	TAP 5	6 - 17 VDC

9-Tap Energized Tap Signal

Speed	9-Tap Mode (Energized Tap Signal)				
	1	2	3	4	5
1	ON	OFF	OFF	OFF	OFF
2	OFF	ON	OFF	OFF	OFF
3	OFF	x	ON	OFF	OFF
4	OFF	x	x	ON	OFF
5	OFF	x	x	x	ON
6	ON	ON	OFF	OFF	OFF
7	ON	x	ON	OFF	OFF
8	ON	x	x	ON	OFF
9	ON	x	x	x	ON

ON = The tap is energized (6 - 17vDC)

OFF = The tap is not energized

x = The tap can be either ON or OFF

SERVICING

Checking Duct Static

The maximum and minimum allowable external static pressures are found in the specification section. These tables also show the amount of air being delivered at a given static by a given motor speed or pulley adjustment. The furnace motor cannot deliver proper air quantities (CFM) against statics other than those listed.

Too great of an external static pressure will result in insufficient air that can cause excessive temperature rise, resulting in limit tripping, etc. Whereas not enough static may result in motor overloading.

To determine proper air movement, proceed as follows:

1. With clean filters in the furnace, use a manometer to measure the static pressure of the return duct at the inlet of the furnace. (Negative Pressure)
2. Measure the static pressure of the supply duct. (Positive Pressure)
3. Add the two (2) readings together for total external static pressure.

NOTE: Both readings may be taken simultaneously and read directly on the manometer if so desired. If an air conditioner coil or Electronic Air Cleaner is used in conjunction with the furnace, the readings must also include theses components, as shown in the following drawing.

4. Consult proper tables for the quantity of air.

If the total external static pressure exceeds the minimum or maximum allowable statics, check for closed dampers, registers, undersized and/or oversized poorly laid out duct work.

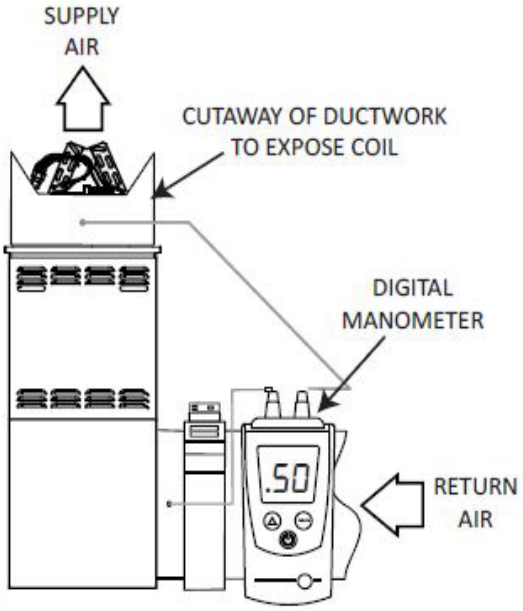

Checking Static Pressure

Checking Temperature Rise

The more air (CFM) being delivered through a given furnace, the less the rise will be; so the less air (CFM) being delivered, the greater the rise. The temperature rise should be adjusted in accordance to a given furnace specifications and its external static pressure. An incorrect temperature rise may result in condensing in or overheating of the heat exchanger. An airflow and temperature rise table is provided in the blower performance specification section. Determine and adjust temperature rise as follows:

1. Operate furnace with burners firing for approximately ten minutes. Check BTU input to furnace - do not exceed input rating stamped on rating plate. Ensure all registers are open and all duct dampers are in their final (fully or partially open) position.
2. Place thermometers in the return and supply ducts as close to the furnace as possible. Thermometers must not be influenced by radiant heat by being able to "see" the heat exchanger.

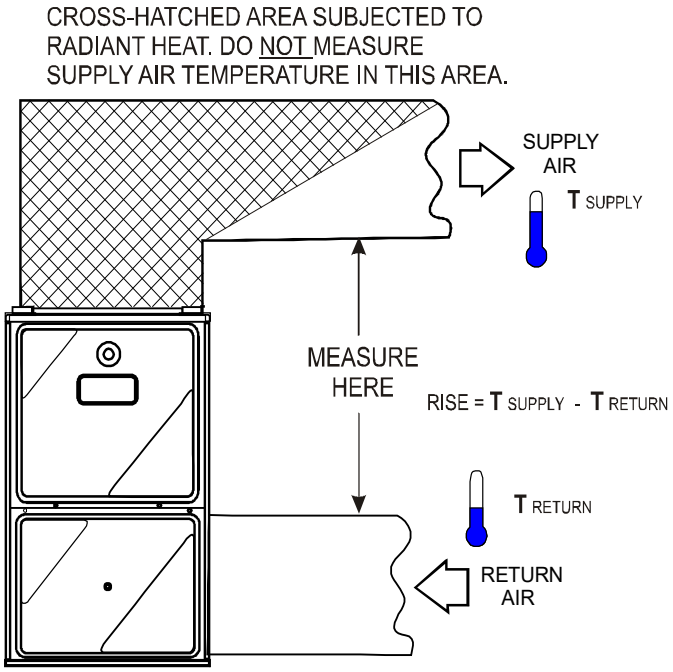

Checking Temperature Rise

3. Subtract the return air temperature from the supply air temperature to determine the air temperature rise. Allow adequate time for thermometer readings to stabilize.
4. Adjust temperature rise by adjusting the circulator blower speed. Increase blower speed to reduce temperature rise. Decrease blower speed to increase temperature rise. Refer to *Circulator Blower Speed* section in the Product Design section of this manual for speed changing details. Temperature rise is related to the BTUH output of the furnace and the amount of air (CFM) circulated over the heat exchanger. Measure motor current draw to determine that the motor is not overloaded during adjustments.

SERVICING

Checking Primary Limit Control

All primary limit controls are nonadjustable, automatic reset, bi-metal type limit control. Refer to the following drawing for the location of the primary limit.

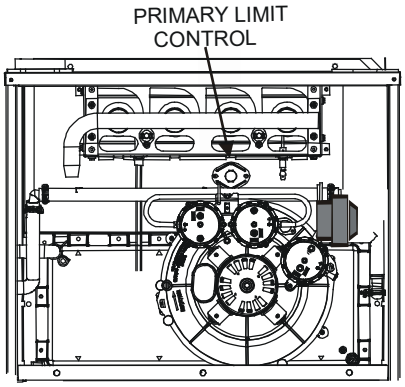

Primary Limit Control Location (90% Upflow Furnace Shown)

The following drawing illustrates the style of limit switches used on the 90% furnaces.

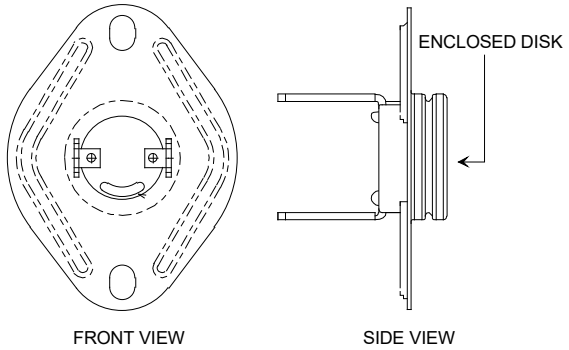

Primary Limit Control Style

WARNING

HIGH VOLTAGE
Disconnect ALL power before servicing or changing any electrical wiring. Multiple power sources may be present. Failure to do so may cause property damage, personal injury or death.

1. Remove burner compartment door to gain access to the primary limit.
2. Remove low voltage wires at limit control terminals.
3. With an ohmmeter, test between these two terminals as shown in the following drawing. The ohmmeter should read continuous unless heat exchanger temperature is above limit control setting. If not as above, replace the control.

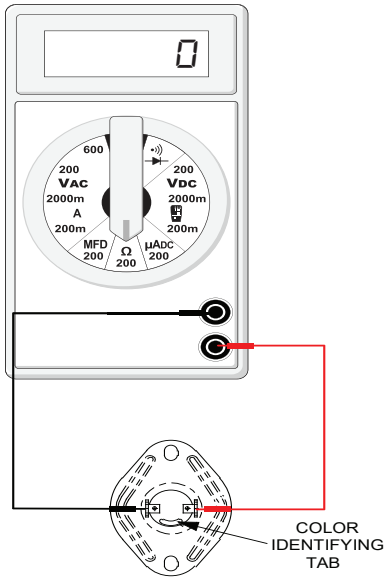

Testing Primary Limit Control

4. After completing check and/or replacement of primary limit control, reinstall burner compartment door.
5. Turn on electrical power and verify proper unit operation.

WARNING: DO NOT bypass Primary Limit safety circuit.

Checking Auxiliary Limit Control

Auxiliary limit switches are nonadjustable, automatic reset, bi-metal type limit controls. This control is located in the blower compartment of the furnace and are attached to the blower housing.

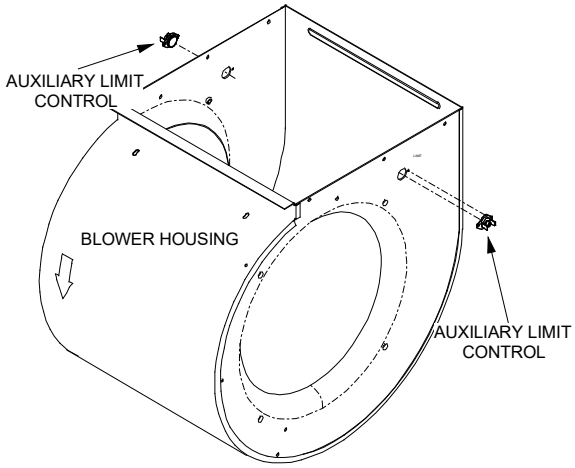

Auxiliary Limit Control Location

WARNING

HIGH VOLTAGE
Disconnect ALL power before servicing or installing this unit. Multiple power sources may be present. Failure to do so may cause property damage, personal injury or death.

SERVICING

1. Remove blower compartment door to gain access to the auxiliary limits.
2. Remove low voltage wires at limit control terminals.
3. With an ohmmeter, test between these two terminals as shown in the following drawing. The ohmmeter should read continuous unless limit control is open due to excessive heat from the heat exchanger. If the limit does not automatically reset, replace the control.

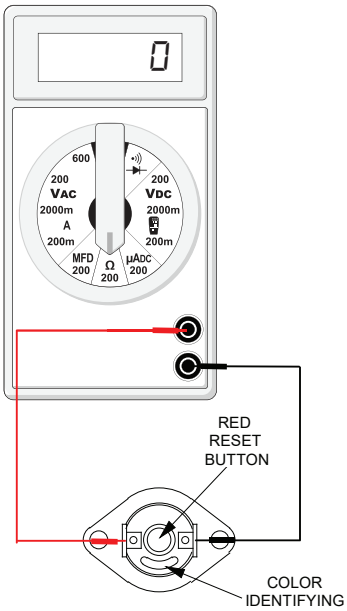

TESTING AUXILIARY LIMIT CONTROL

WARNING

TO AVOID POSSIBLE FIRE, ONLY RESET THE AUXILIARY LIMIT CONTROL ONCE. IF IT SHOULD OPEN A SECOND TIME, A QUALIFIED SERVICER MUST DETERMINE WHY THE AUXILIARY LIMIT OPENED BEFORE RESETTING AGAIN.

WARNING: DO NOT bypass Auxillary Limit safety circuit.

CHECKING FLAME ROLLOUT CONTROL

A temperature activated manual reset control is mounted to the manifold assembly as shown in the following illustration

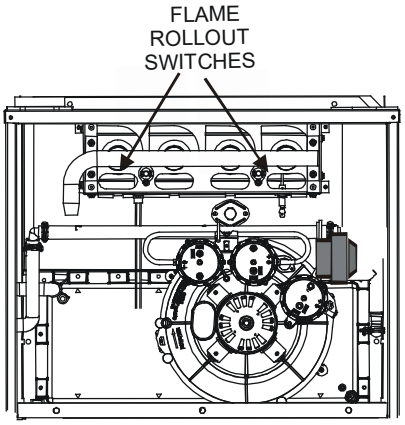

FLAME ROLLOUT SWITCH LOCATION
(90% UPFLOW FURNACE SHOWN, COUNTERFLOW SIMILAR)

The control is designed to open should a flame roll out occur. An over firing condition or flame impingement on the heat shield may also cause the control to open. If the rollout control opens, the air circulation blower will run continuously.

WARNING

LINE VOLTAGE NOW PRESENT

If a roll out switch has tripped, it is important to find out why. Possible causes could be flame impingement, orifice plate out of position, burners with excessive cross-over slot dimension, over-firing, improper orifices, improper gas pressure, air leaking from around the heat exchanger into the burner compartment, air leaking through the heat exchanger itself.

1. Remove the burner compartment door to gain access to the rollout switch(es) mounted to burner bracket.
2. Reset the manual roll out switch
3. Remove wires from roll out switch
4. Using an ohmmeter, check for continuity across the switch.
5. If the switch will not close after manually resetting, it must be replaced.
6. Measure the voltage between each side of the rollout control and ground during the ignition attempt.
7. After check and/or replacement of rollout switch, reinstall burner compartment door and verify proper unit operation.

SERVICING

Induced Draft Blower Motor

WARNING

HIGH VOLTAGE
Disconnect ALL power before servicing or installing this unit. Multiple power sources may be present. Failure to do so may cause property damage, personal injury or death.

1. Remove burner compartment door to gain access to the induced draft blower motor.
2. Disconnect the motor wire leads from its connection point at the induced draft motor.
3. Using a ohmmeter, test for continuity between each of the motor leads.
4. Touch one probe of the ohmmeter to the motor frame (ground) and the other probe in turn to each lead. If the windings do not test continuous or a reading is obtained to ground, replace the motor.
5. If the windings have a continuity reading, reconnect wires. Turn power on to the furnace and turn the thermostat on in the heating mode. Check voltage for 120V at the induced draft motor terminals during the trial for ignition. If you have 120V and the motor does not run, replace the induced draft motor.
6. After completing check and/or replacement of induced draft motor, reinstall burner compartment door.
7. Turn on electrical power and verify proper unit operation.

Checking Gas Valve (Redundant)

A combination redundant operator type gas valve which provides all manual and automatic control functions required for gas fired heating equipment is used.
The valve provides control of main burner gas flow, pressure regulation, and 100 percent safety shut-off.

WARNING

Disconnect ALL power before servicing

Two stage gas valves always require 24 volts between common and low fire (main coil) to open. Also, the furnace front cover pressure switch is wired in series with the low (main) solenoid of the gas valve. In the event of a non functioning gas valve, always check the front cover pressure switch.

Checking Main Burners

The main burners are used to provide complete combustion of various fuels in a limited space, and transfer this heat of the burning process to the heat exchanger. Proper ignition, combustion, and extinction are primarily due to burner design, orifice sizing, gas pressure, primary and secondary air, vent and proper seating of burners.

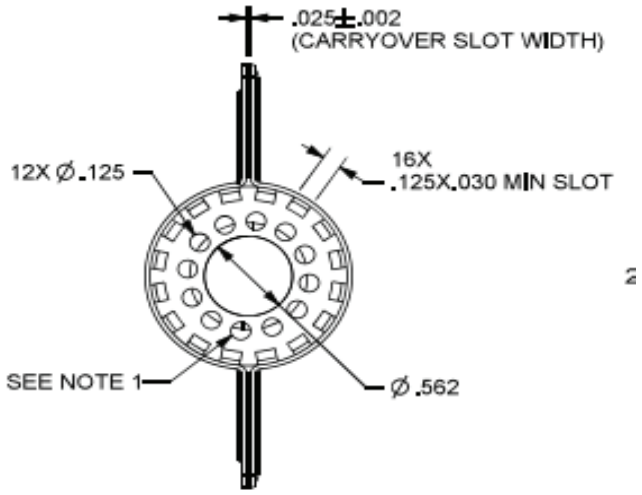

34.5" Burner

WARNING

Disconnect ALL Gas and Electrical Power Supply.

In checking main burners, look for signs of rust, oversized and undersized carry over ports restricted with foreign material, etc, burner cross-over slots should not be altered in size.

Checking Orifices

DR96TN/DD96TN model furnaces have factory installed #45 natural gas orifices (except DM96TN0303AN which has #50).
The only time resizing is required is when a reduction in firing rate is required for an increase in altitude or a furnace is being converted for use with LP gas.
Orifices should be treated with care in order to prevent damage. They should be removed and installed with a box-end wrench in order to prevent distortion. In no instance should an orifice be peened over and redrilled. This will change the angle or deflection of the vacuum effect or entraining of primary air, which will make it difficult to adjust the flame properly. This same problem can occur if an orifice spud of a different length is substituted.

WARNING

Disconnect ALL Gas and Electrical Power Supply.

SERVICING

1. Check orifice visually for distortion and/or burrs.
2. Check orifice size with orifice sizing drills.

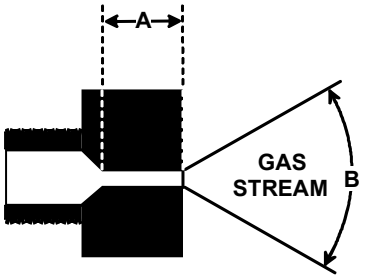

The length of Dimension "A" determines the angle of Gas Stream "B".

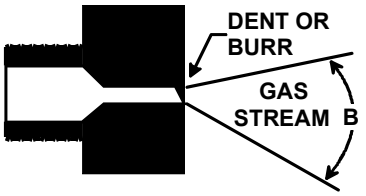

A dent or burr will cause a severe deflection of the gas stream.

Checking Gas Pressure

Gas Supply Pressure Measurement

Gas Pressure Test

The line pressure supplied to the gas valve must be within the range specified below. The supply pressure can be measured at the gas valve inlet pressure tap or at a hose fitting installed in the gas piping drip leg. The supply pressure must be measured with the burners operating. To measure the gas supply pressure, use the following procedure.

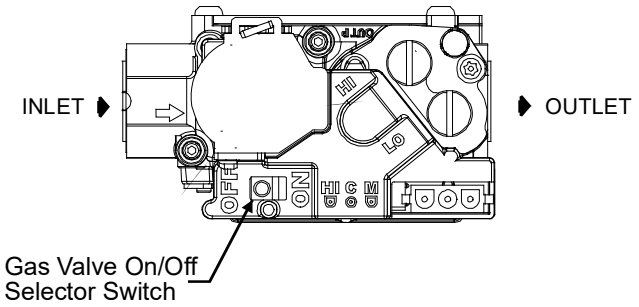

White-Rodgers Model 36J54 (Two-Stage)

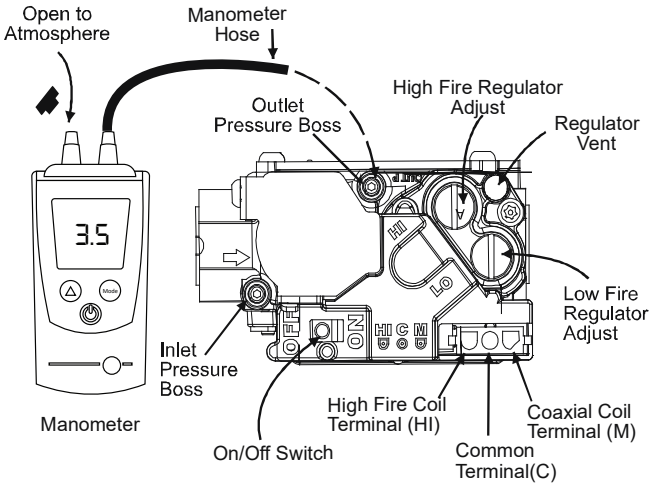

White-Rodgers Model 36J54 Connected to Manometer

1. Turn OFF gas to furnace at the manual gas shutoff valve external to the furnace.
2. Connect a calibrated manometer (or appropriate gas pressure gauge) at either the gas valve inlet pressure tap or the gas piping drip leg. See White-Rodgers 36J54 gas valve figure for location of inlet pressure tap.

INLET GAS SUPPLY PRESSURE		
Natural Gas	Minimum: 4.5" w.c.	Maximum: 10.0" w.c.
Propane Gas	Minimum: 11.0" w.c.	Maximum: 13.0" w.c.

NOTE: If measuring gas pressure at the drip leg, a field-supplied hose barb fitting must be installed prior to making the hose connection. If using the inlet pressure tap on the White-Rodgers 36J54 gas valve, then use the 36G/J Valve Pressure Check Kit, Part No. 0151K00000S.

3. Turn ON the gas supply and operate the furnace and all other gas consuming appliances on the same gas supply line.
4. Measure furnace gas supply pressure with burners firing. Supply pressure must be within the range specified in the *Inlet Gas Supply Pressure* table.

If supply pressure differs from table, make the necessary adjustments to pressure regulator, gas piping size, etc., and/or consult with local gas utility.

5. Turn OFF gas to furnace at the manual shutoff valve and disconnect manometer. Reinstall plug before turning on gas to furnace.
6. Turn OFF any unnecessary gas appliances stated in step 3.

SERVICING

Gas Manifold Pressure Measurement and Adjustment

Only small variations in gas pressure should be made by adjusting the gas valve pressure regulator. The manifold pressure must be measured with the burners operating. To measure and adjust the manifold pressure, use the following procedure.

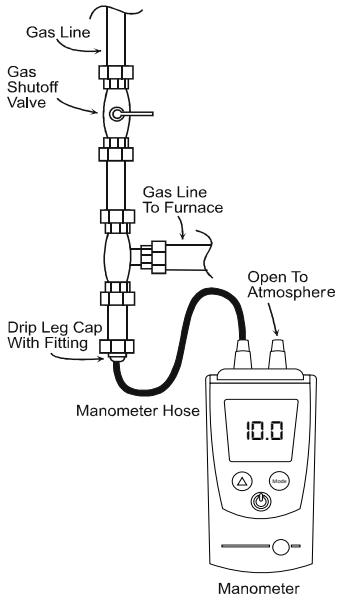

Measuring Inlet Gas Pressure (Alt. Method)

CAUTION

To prevent unreliable operation or equipment damage, the inlet gas supply pressure must be as specified on the unit rating plate with all other household gas fired appliances operating.

1. Turn OFF gas to furnace at the manual gas shutoff valve external to the furnace.
2. Turn off all electrical power to the system.
3. Outlet pressure tap connections: White-Rodgers 36J54 valve: Back outlet pressure test screw (inlet/outlet pressure tap) out one turn (counterclockwise, not more than one turn).
4. Attach a hose and manometer to the outlet pressure tap (White-Rodgers valve).
5. Turn ON the gas supply.
6. Turn on power and close thermostat “R” and “W1” contacts to provide a call for low stage heat.
7. Measure the gas manifold pressure with burners firing. Adjust manifold pressure using the *Manifold Gas Pressure* table shown below.
8. Remove regulator cover screw from the low (LO) outlet pressure regulator adjust tower and turn screw clockwise to increase pressure or counterclockwise to decrease pressure. Replace regulator cover screw.
9. Close thermostat “R”, “W1” and “W2” contacts to provide a call for high stage heat.
10. Remove regulator cover screw from the high (HI) outlet pressure regulator adjust tower and turn screw clockwise to increase pressure or counterclockwise to decrease pressure. Replace regulator cover screw.
11. Turn off all electrical power and gas supply to the system.
12. Remove the manometer hose from the hose barb fitting or outlet pressure tap.
13. Replace outlet pressure tap: White-Rodgers 36J54 valve: Turn outlet pressure test screw in to seal pressure port (clockwise, 7 in-lb minimum).
14. Turn on electrical power and gas supply to the system.
15. Close thermostat contacts “R” and “W1/W2” to energize the valve.

Manifold Gas Pressure			
Gas		Range	Nominal
Natural	Low Stage	1.6 - 2.2" w.c.	1.9" w.c.
	High Stage	3.2 - 3.8" w.c.	3.5" w.c.
Propane	Low Stage	5.7 - 6.3" w.c.	6.0" w.c.
	High Stage	9.7 - 10.3" w.c.	10.0" w.c.

Using a leak detection solution or soap suds, check for leaks at screw (White-Rodgers valve). Bubbles forming indicate a leak. SHUT OFF GAS AND REPAIR ALL LEAKS IMMEDIATELY!

NOTE: For gas to gas conversion, consult your dealer for appropriate conversion.

CAUTION

To prevent unreliable operation or equipment damage, the inlet gas supply pressure must be as specified on the unit rating plate with all other household gas fired appliances operating.

Manifold Gas Pressure			
Gas	Rate	Range	Nominal
Natural Gas	High Stage	3.2 to 3.8" w.c.	3.5" w.c.
	Low Stage	1.6 to 2.2" w.c.	1.9" w.c.

WARNING

HIGH VOLTAGE
Disconnect ALL power before servicing or installing this unit. Multiple power sources may be present. Failure to do so may cause property damage, personal injury or death.

WARNING

HIGH VOLTAGE
Disconnect ALL electrical power and shut off gas supply before servicing or installing.

SERVICING

Manifold Gas Pressure			
Gas	Rate	Range	Nominal
Propane Gas	High Stage	9.7 to 10.3" w.c.	10.0" w.c.
	Low Stage	5.7 to 6.3" w.c.	6.0" w.c.

Checking Hot Surface Ignitor

120V Silicon Nitride Ignitor - The normal operating temperature is approximately 2156°F - 2678°F. At room temperature the igniter ohm reading should be from 37-68 ohms.

1. Place unit in heating cycle, measure current draw of ignitor during preheat cycle. The steady state current at 120V is 0.37 to 0.68 amps.
2. After checking and/or replacing of hot surface ignitor, reinstall burner compartment door and verify proper unit operation.

Checking For Flashback

Flashback will also cause burning in the burner venturi, but is caused by the burning speed being greater than the gas-air flow velocity coming from a burner port.

Flashback may occur at the moment of ignition, after a burner heats up or when the burner turns off. The latter is known as extinction pop.

Since the end results of flashback and delayed ignition can be the same (burning in the burner venturi) a definite attempt should be made to determine which has occurred. If flashback should occur, check for the following:

1. Improper gas pressure - adjust to proper pressure.
2. Check burner for proper alignment and/or replace burner.
3. Improper orifice size - check orifice for obstruction.

Checking Pressure Switch

The pressure control is a safety device to prevent the combustion cycle from occurring with inadequate venting caused by a restricted or blocked vent pipe.

WARNING

HIGH VOLTAGE
Disconnect ALL power before servicing or installing this unit. Multiple power sources may be present. Failure to do so may cause property damage, personal injury or death.

1. Remove burner compartment door to gain access to pressure switch(es).
2. Remove wires from the pressure switch(es) electrical terminals.
3. Remove the pressure control hose from the control and interconnect with an manometer as shown in the following figures.
4. With an ohm meter connected across the pressure switch terminals; with the inducer running the switch should close and the ohm meter should show a complete circuit across the pressure switch. If the switch is not closed, compare the negative pressure to the closing point specified for the particular switch. Either the switch is defective or the inducer / venting system is inadequate.

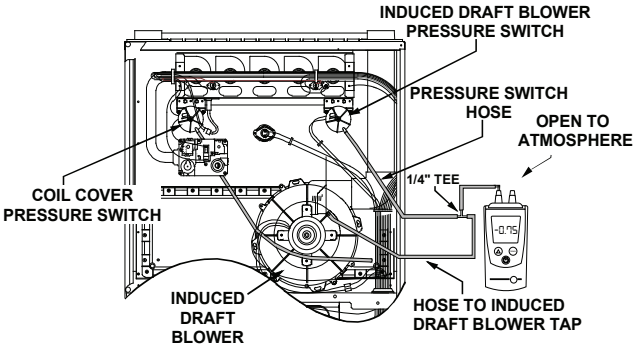

Blower Pressure Switch Negative Pressure Measurement

High Altitude Application (USA)

The furnace as shipped requires no change to run between 0-7000 feet. Do not attempt to increase the firing rate by changing orifices or increasing the manifold pressure below 7000 feet. This can cause poor combustion and equipment failure. High altitude installations above 7000 feet may require both a pressure switch and an orifice change. These changes are necessary to compensate for the natural reduction in the density of both the gas fuel and the combustion air at higher altitude.

For installations above 7000 feet please refer to your distributor for required kit(s). Contact the distributor for a tabular listing of appropriate manufacturer's kits for propane gas and/or high altitude installations. The indicated kits must be used to insure safe and proper furnace operation. All conversions must be performed by a qualified installer, or service agency.

In some areas the gas supplier may artificially derate the gas in an effort to compensate for the effects of altitude. If the gas is artificially derated the appropriate orfice size must be determined based on the BTU/ft^3 content of the derated gas and the altitude. Refer to the National Fuel Gas Code, NFPA 54/ ANSI Z223.1, and information provided by the gas supplier to determine the proper orifice size.

Checking For Delayed Ignition

Delayed ignition is a delay in lighting a combustible mixture of gas and air which has accumulated in the combustion chamber.

Furnace design makes this extremely unlikely unless safety controls have been by-passed or tampered with. Never by-pass or alter furnace controls.

SERVICING

If delayed ignition should occur, the following should be checked:

1. Improper gas pressure - adjust to proper pressure.
2. Improper burner positioning - burners should be in locating slots, level front to rear and left to right.
3. Carry over (lighter tube or cross lighter) obstructed - clean.
4. Main burner orifice(s) deformed, or out of alignment to burner - replace.

CHECKING INTEGRATED IGNITION CONTROL BOARDS

NOTE: Failure to earth ground the furnace, reversing the neutral and hot wire connection to the line (polarity), or a high resistance connection in the neutral line may cause the control to lockout due to failure to sense flame.

WARNING

TO AVOID THE RISK OF ELECTRICAL SHOCK, WIRING TO THE UNIT MUST BE PROPERLY POLARIZED AND GROUNDED. DISCONNECT POWER BEFORE PERFORMING SERVICE LISTED BELOW.

The ground wire must run from the furnace all the way back to the electrical panel. Proper grounding can be confirmed by disconnecting the electrical power and measuring resistance between the neutral (white) connection and the burner closest to the flame sensor. Resistance should be less than 2 ohms.

The ignition control is a combination electronic and electromechanical device and is not field repairable.

WARNING

LINE VOLTAGE NOW PRESENT

These tests must be completed within a given time frame due to the operation of the ignition control.

The ignition control is capable of diagnosing many furnace failures to help in troubleshooting. The trial for ignition period is 4 seconds.

CHECKING FLAME SENSOR

A flame sensing device is used in conjunction with the ignition control module to prove combustion. If proof of flame is not present the control will de-energize the gas valve and “retry” for ignition or lockout.

WARNING

HIGH VOLTAGE

DISCONNECT ALL POWER BEFORE SERVICING OR INSTALLING THIS UNIT. MULTIPLE POWER SOURCES MAY BE PRESENT. FAILURE TO DO SO MAY CAUSE PROPERTY DAMAGE, PERSONAL INJURY OR DEATH.

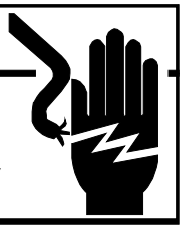

Flame current can be measured by:

1. Putting a D.C. microamp meter in series with the flame rod

WARNING

LINE VOLTAGE NOW PRESENT

2. As soon as flame is established a micro-amp reading should be evident once proof of flame (micro-amp reading) is established, the hot surface ignitor will be de-energized.
3. The Integrated Ignition controls will have 3 to 8 micro-amps. If the micro-amp reading is less than the minimum specified, check for high resistance wiring connections, sensor to burner gap, dirty flame sensor, or poor grounding.
4. If absolutely no reading, check for continuity on all components and if good - replace ignition control module.

NOTE: Contaminated fuel or combustion air can create a nearly invisible coating on the flame sensor. This coating works as an insulator causing a loss in the flame sense signal. If this situation occurs the flame sensor must be cleaned with steel wool.

TROUBLESHOOTING

Menu Description	LED Display		Notes
	Main Menu	Option Menu	
Active Alarm menu	Er r	Exx	(xx: code numbers)
Last 10 Faults	F10	Exx	(xx: code numbers)
Code Release Number	Cr	CR Number	
Reset to Factory Default	r Fd	yes, no	
Blower Speed for Continuous Fan Mode	FSd	Fxx	(xx: Blower Speed Number F01, F02..)
Blower Speed for 1st Stage Compressor Mode	AC1	Fxx	(xx: Blower Speed Number F01, F02..)
Blower Speed for 2nd Stage Compressor Mode	AC2	Fxx	(xx: Blower Speed Number F01, F02..)
Cool On Delay	Cnd	Delay, Seconds	Default set at 7 Secs, Adjustments can be made in 7 Secs increments from 0 to 35 Secs
Cool Off Delay	Cf d	Delay, Seconds	Default set at 65 Secs, Adjustments can be made in 5 Secs increments from 0 to 120 Secs
Fan Speed for Low-Stage Gas Heat Mode	gA1	Fxx	(xx: Blower Speed Number F01, F02..)
Fan Speed for High-Stage Gas Heat Mode	gA2	Fxx	(xx: Blower Speed Number F01, F02..)
Gas Heat On Delay	gnd	Delay, Seconds	Default set at 30 Secs, Adjustments can be made in 5 Secs increments from 5 to 30 Secs
Gas heat Off Delay	gFd	Delay, Seconds	Default set at 90 Secs, Adjustments can be made in 30 Secs increments from 30 to 180 Secs
Automatic Heat Staging - For Two Stage Control	AHS	no, 10, 20, 30, 60, AUt	Refer to Section " CHANGING HEATING MODE SETTING"
A2L Function Verification	A2u	yes, no	Refer to the R-32 Information Section
A2L Function Enabled	A2E	yes, no	Refer to the R-32 Information Section

2 Stage Status Codes

Mode	Main Menu
Idle	IdL
Continuous Fan	FAn
Compressor Cooling, Low Stage	1AC
Compressor Cooling, High Stage	2AC
Gas heat, Low Stage	9H1
Gas heat, High Stage	9H2
OEM test Mode	EOL

TROUBLESHOOTING

2 Stage Troubleshooting Codes

Symptom	LED Status	Fault Description	Possible Causes	Corrective Action(s)	Notes & Cautions
Normal operation.	IdL	Idle	• Normal operation.	• None	• Normal operation.
Furnace fails to operate. Integrated control module LED display provides no signal.	nonE	No 120VAC power to furnace or no 24 volt power to integrated control module.	• Blown fuse or tripped circuit breaker. • Manual disconnect switch turned OFF, door switch open or 24 volt wire improperly connected or loose. • Furnace electrical supply shared with other devices. • Integrated control module is non-functional.	• Check furnace breaker to see if it has tripped. Reset breaker if tripped. • Check 120VAC power to furnace, primary side of the 24 volt transformer and integrated control module. • Check for possible shorts in 120VAC circuit. Repair as necessary. • If transformer has 120VAC on the primary side, confirm transformer has 24 volts on the secondary side. • Verify 24 volt wires from the transformer to the furnace control board are not damaged and are properly connected to the 12-pin harness. Make repairs or wiring corrections if needed. • If all wiring connections have been verified, replace the furnace control board.	• Turn power OFF prior to repair. • Make wiring repairs or wiring corrections as needed. • Read precautions in "Electrostatic Discharge" section of manual. • Replace control with correct replacement part.
Furnace fails to operate and goes into a hard lockout.	EbL	Circulator blower motor is consuming very little current after heat ON delay - below expected value.	• Loose wiring connections to and from the blower motor. • Circulator blower motor 120 volt L1 wire is not plugged into the CIRC-H connection on the integrated control board. • Heating blower speed not set correctly. • Circulator blower motor failure.	• Check for loose wiring connections to and from the circulator blower motor. • Verify 120 volt L1 wire from blower motor is plugged into the CIRC-H connection on the integrated control board. • Verify blower voltage, amps and proper speed setting. Replace blower motor if necessary.	• Turn power OFF prior to repair. • Replace blower motor with correct replacement part.
Furnace fails to operate and goes into a hard lockout.	EbU	Circulator blower motor is consuming too much current during inducer pre-purge is higher than expected value.	• Circulator blower motor power wiring reversed on integrated control board.	• Check for loose wiring connections to and from the circulator blower motor. • Check for miswired connections on the integrated control board.	• Turn power OFF prior to repair.
Furnace fails to operate.	Ed8	Invalid Call (check ODS setting)	• ODS setting does not match outdoor unit.	• Setup ODS to match outdoor unit. • Setup TON airflow to match outdoor unit.	• Set system to IdL before setting ODS and TON
Furnace fails to operate.	EE0	Furnace lockout due to excessive number of ignition "retries" (3 total). Failure to establish flame. Loss of flame after establishment.	• No gas or improper gas pressure to burners. • Bad igniter or igniter alignment. • Orifices restricted. • Coated/oxidized or improperly connected flame sensor. • Restriction in flue and/or lack of combustion air. • Improper induced draft blower performance.	• Locate and correct gas interruption. • Check front cover pressure switch operation and verify proper drainage (hose, wiring, contact operation), correct if necessary • Replace or realign igniter. • Check flame sense signal. Clean sensor if coated and/or oxidized. • Check flue piping for blockage, proper length, elbows and termination. • Verify proper induced draft blower performance.	• Turn power OFF prior to repair. • Igniter is fragile, handle with care. • Clean flame sensor with steel wool. • See "Vent/Flue Pipe" section for piping details.
Furnace fails to operate.	EE1	Low-stage pressure switch circuit closed at start of heating cycle.	• Low stage pressure switch contacts sticking. • Short in pressure switch circuit wiring.	• Replace low stage pressure switch. • Repair short in wiring.	• Turn power OFF prior to repair. • Replace pressure switch with proper replacement part.
Induced draft blower runs continuously with no further furnace operation.	EE2	Low-stage pressure switch circuit open.	• Pressure switch hose blocked, pinched, or connected improperly. • Blocked flue pipe and/or inlet air pipe, blocked drain system or weak induced draft blower. • Incorrect pressure switch set point or malfunctioning switch contacts. • Loose or improperly connected wiring.	• Inspect pressure switch hose. Repair/replace if necessary. • Inspect flue and/or inlet air piping for blockage, proper length, elbows and termination. Correct as necessary. • Check drain system. Correct as necessary. • Check induced draft blower performance. Correct as necessary. • Check pressure switch operation. Replace as needed. • Tighten or correct wiring connections.	• Turn power OFF prior to repair. • Replace pressure switch with proper replacement part. • Replace induced draft blower with proper replacement part.
Circulator blower runs continuously with no furnace operation.	EE3	Primary limit circuit open.	• Insufficient conditioned air over the heat exchanger. • Blocked filters, restrictive ductwork. • Inproper circulator blower speed or failed circulator blower motor. • Loose or improperly connected wiring in high limit circuit.	• Check filters and ductwork for blockage. Clean filters or remove obstruction. • Check circulator blower speed and performance. Correct speed or replace blower motor if necessary. • Tighten or correct wiring connections.	• Turn power OFF prior to repair. • See Specification Sheet applicable for your model for allowable temp rise range and proper circulator speed.

To View & Clear Fault Codes

- Press either the Left or Right button until F 1 0 is displayed.
- Press the center button to view stored faults.
- Press and hold the center button for 5 to 30 seconds.
- All stored faults will be erased, and the display will flash - - - three times and return to F 1 0.

2 Stage Troubleshooting Codes

Symptom	LED Status	Fault Description	Possible Causes	Corrective Action(s)	Notes & Cautions
Induced draft blower and circulator blower run continuously with no furnace operation.	EE4	Flame sensed with no call for heat.	• Short to ground in flame sense circuit. • Lingering burner flame. • Slow closing gas valve.	• Correct short at flame sensor or in flame sensor wiring. • Check for lingering flame. • Verify proper operation of gas valve.	• Turn power OFF prior to repair.
No furnace operation.	EE5	Open fuse.	• Blown fuse • Short in low voltage wiring • Back of control board is touching mounting panel because standoffs are missing.	• Replace fuse • Locate and correct short in low voltage wiring. • Replace the missing standoffs.	• Turn power OFF prior to repair. • Replace fuse with 3-amp automotive type.
Normal furnace operation with weak flame signal.	EE6	Flame sense micro amp signal is low.	• Flame sensor is coated/oxidized. • Flame sensor incorrectly positioned in burner flame. • Lazy burner flame due to improper gas pressure or combution air.	• Clean flame sensor if coated or oxidized. • Inspect flame sensor for proper alignment. • Check inlet air piping for blockage, proper length, elbows, and termination. • Compare current gas pressure to rating plate and adjust as needed.	• Turn power OFF prior to repair. • Clean flame sensor with steel wool. • See "Vent/Flue Pipe" section for piping details. • See rating plate for proper gas pressure.
Furnace fails to operate.	EE7	Problem with igniter circuit.	• Improperly connected igniter. • Shorted igniter. • Poor furnace ground. • Igniter relay fault on integrated control module.	• Check and correct wiring from integrated control module to igniter. • Replace shorted igniter. • Check and correct furnace ground wiring. • Check igniter output from control. Replace if necessary.	• Turn power OFF prior to repair. • Replace ingiter with correct replacement part. • Replace control with correct replacement part.
Furnace fails to operate on high stage. Furnace operates normally on low stage.	EE8	High-stage pressure switch circuit closed at start of heating cycle.	• High stage pressure switch contacts sticking. • Short in pressure switch circuit wiring.	• Diagnose and replace high stage pressure switch if needed. • Repair short in wiring.	• Turn power OFF prior to repair. • Replace pressure switch with proper replacement part.
Furnace fails to operate on high stage. Furnace operates normally on low stage.	EE9	High-stage pressure switch circuit open.	• Pressure switch hose blocked, pinched, or connected improperly. • Blocked flue pipe and/or inlet air pipe, blocked drain system or weak induced draft blower. • Incorrect pressure switch set point or malfunctioning switch contacts. • Loose or improperly connected wiring.	• Inspect pressure switch hose. Repair/replace if necessary. • Inspect flue and/or inlet air piping for blockage, proper length, elbows and termination. Correct as necessary. • Check drain system. Correct as necessary. • Check induced draft blower performance. Correct as necessary. • Check pressure switch operation. Replace as needed. • Tighten or correct wiring connections.	• Turn power OFF prior to repair. • Replace pressure switch with proper replacement part. • Replace induced draft blower with proper replacement part.
Furnace fails to operate.	E10	Grounding fault	• Poor neutral connection.	• Verify neutral wire connection to furnace and continuity to ground source.	• Turn power OFF prior to repair.
Furnace fails to operate.	E11	Open rollout switch.	• Gas pressure too high. • Burners mis-aligned. • Restricted heat exchanger or venting.	• Check and correct gas pressure. • Check and correct burner alignment. • Check and correct restriction	• Turn power OFF prior to repair.
Furnace fails to operate.	EEA	Polarity if 115 volt AC is reversed.	• Polarity of 115 volt AC power to furnace or integrated control module is reversed. • Poor furnace ground.	• Review wiring diagram to correct polarity. • Verify proper ground. Correct if necessary. • Check and correct wiring.	• Turn power OFF prior to repair.
Furnace fails to operate.	EEb	Integrated Control Board is not energizing the gas valve when it should be on.	• Miswired gas valve circuit. • Open gas valve circuit. • Gas valve relay on integrated control board stuck open.	• Check wiring in gas valve circuit. • Replace integrated control board. • Do NOT replace the gas valve.	• Turn power OFF prior to repair.
Furnace fails to operate.	EEC	Gas valve is energized when it should be off.	• Miswired gas valve circuit. • Shorted gas valve wiring.	• Cycle 120VAC power to the furnace control. If EEC error code is still active, turn off power to the furnace and continue diagnosis. NOTE: This error code is a wiring issue external to the furnace control board. • Inspect system wiring for damage and repair if needed. • If EEC error code is still active, replace system wiring harness. NOTE: After replacing system wire harness, if EEC is still active, replace integrated control board.	• Turn power OFF prior to repair.
Furnace fails to operate.	EEE	Furnace control board has detected an internal fault.	• 120VAC power wiring loose or damaged. • Poor ground wire. • Damaged or miswired 120V or 24V wiring on the furnace.	• Turn off power to the furnace for at least 3 minutes, then turn power back on (to see if the EEE code will reset). • Inspect 120V and 24V wiring to the furnace and on the furnace for signs of damage or miswiring. • Replace integrated control board. • Do not replace additional components based on this error code.	• Turn power OFF prior to repair. • Replace the integrated control board with proper replacement part. • Do not replace additional components based on this error code.
Twinning feature not working.	EEH	Error with Twinning function.	• Both furnaces not on the same 120VAC power from the breaker panel. • Low voltage wiring error or loose wiring connections.	• Verify both furnaces are on the same 120VAC power from the breaker panel. • Turn off power to both furnaces. Disconnect the twinning wire between the two furnace control boards. Turn power back on to both furnaces. • Confirm both furnaces are powered and the furnace control boards do not have any active error codes. If one of the controls displays the EEH, (without the twinning wire) replace only that control board. 3) Turn power off to both furnaces again. Re-connect the twinning wires between both furnace control boards. Verify the twinning wire is properly connected and not damaged. Replace the wire if necessary. Turn power back on to both furnaces. 4) Confirm thermostat wiring is correct per the installation manual. Provide a G (Fan Only) signal to the main furnace control. Check if the twinned furnace starts running the blower at the same speed as the main furnace. 5) If the twinned furnace is not operating the fan and the EEH fault is still active, Replace one of the furnace control boards. If EEH is still active, replace the second furnace control board.	• Turn power OFF prior to repair. • Replace the integrated control board with proper replacement part.

TROUBLESHOOTING

Symptom	LED Status	Fault Description	Possible Causes	Corrective Action(s)	Notes & Cautions
Furnace fails to operate.	EEJ	Inducer motor relay error.	• Inducer motor relay issue in the integrated control board.	• Replace integrated control board. • Do not replace additional components based on this error code.	• Turn power OFF prior to repair. • Replace the integrated control board with proper replacement part. • Do not replace additional components based on this error code.
Furnace fails to operate.	EEL	Problem with ignitor circuit.	• Improperly connected ignitor. • Shorted ignitor. • Poor furnace ground. • Ignitor relay fault on integrated control module.	• Check and correct wiring from integrated control board to ignitor. • Diagnose and replace shorted ignitor as needed. • Verify and correct furnace ground wiring. • Check ignitor output from control. Replace if necessary.	• Turn power OFF prior to repair. • Replace ignitor with correct replacement part. • Replace control with correct replacement part.
Furnace fails to operate.	EEn	Ignitor open.	• Loose or incorrect wiring from integrated control board to ignitor. • Damaged ignitor.	• Check and correct wiring from integrated control board to ignitor. • Replace ignitor if necessary.	• Turn power OFF prior to repair. • Replace ignitor with correct replacement part.
Furnace stops heating and only the fan is operating.	EAF	Furnace has lost communication with the R-32 sensor and the furnace is in mitigation mode.	**Furnace may not be paired with R-32 Cooling Unit. Refer to the R-32 Information Section**. • Loose or damaged R-32 sensor wire.	• Verify wire connection to R-32 sensor is not loose. • Verify the R-32 sensor wire is not damaged. • Replace R-32 sensor if necessary.	• Turn power OFF prior to repair. • Replace R-32 sensor with proper replacement part.
Furnace stops heating and only the fan is operating.	EAL	R-32 sensor has detected a refrigerant leak and furnace is in mitigation mode.		• Investigate the indoor coil for a refrigerant leak. • Furnace will resume normal operation once a leak is no longer detected and the 5-minute delay period is over.	• Turn power OFF prior to repair.
Furnace stops heating and only the fan is operating.	EAS	R-32 sensor has detected a fault and furnace is in mitigation mode.		• Investigate the R-32 sensor. • Replace the R-32 sensor if necessary.	• Turn power OFF prior to repair. • Replace R-32 sensor with proper replacement part.
Furnace stops heating and only the fan is operating.	EAr	The furnace control board has detected an issue with the internal A2L relay and is running mitigation mode.		• Disconnect any wire connected to the ALARM terminal of the furnace control. • Cycle power to the furnace. If the error code clears, there is an issue with the wiring connected to the ALARM terminal. Repair wiring if necessary. • If the error code does not clear, replace the integrated control board.	• Turn power OFF prior to repair. • Replace the integrated control board with proper replacement part.

Cooling & Circulation Airflow

MODEL	THERMOSTAT CALL	TAP #	EXTERNAL STATIC PRESSURE (INCHES WATER COLUMN)											
			0.1	0.2	0.3	0.4	0.5		0.6		0.7		0.8	
			CFM	CFM	CFM	CFM	CFM	Watts	CFM	Watts	CFM	Watts	CFM	Watts
DD96TN0403BN	Y/Y1, Y2, G	F01	727	677	623	565	510	101	455	106	403	111	351	116
		F02	923	882	841	798	752	159	704	165	660	172	614	177
		F03	632	574	510	448	388	80	332	85	277	89	234	93
		F04^	878	839	797	751	701	146	653	151	607	157	561	162
		F05	1106	1076	1044	1010	974	243	939	250	899	256	860	263
		F06	1188	1156	1123	1091	1062	290	1029	296	998	302	964	309
		F07	1237	1205	1174	1145	1115	317	1081	324	1050	332	1016	341
		F08	1281	1252	1222	1195	1163	347	1134	357	1104	362	1071	369
		F09	1382	1354	1327	1302	1276	418	1246	424	1219	432	1190	439
DD96TN0603BN	Y/Y1, Y2, G	F01	1167	1118	1069	1022	974	237	928	246	877	252	833	259
		F02	1332	1289	1245	1200	1160	327	1120	335	1081	343	1036	353
		F03	680	609	532	460	397	85	337	90	252	94	201	97
		F04^	903	839	783	719	661	139	601	144	546	150	497	155
		F05	1248	1204	1159	1113	1071	280	1028	290	983	299	943	306
		F06	963	907	852	803	745	160	689	166	639	173	587	179
		F07	1393	1348	1309	1267	1230	368	1189	375	1152	383	1116	391
		F08	1450	1407	1366	1330	1290	409	1251	412	1221	421	1186	430
		F09	1468	1436	1393	1359	1323	418	1285	427	1248	436	1210	445
DD96TN0803BN	Y/Y1, Y2, G	F01	1167	1124	1087	1040	995	250	954	258	916	264	869	272
		F02	1317	1277	1240	1201	1161	336	1122	344	1081	350	1045	360
		F03	733	669	606	543	482	99	424	104	372	109	300	115
		F04^	1217	1174	1130	1086	1045	274	1003	282	962	289	925	297
		F05	1300	1263	1225	1186	1142	322	1099	331	1062	339	1023	348
		F06	919	872	820	764	711	149	658	156	605	162	553	168
		F07	1126	1085	1042	998	953	234	910	241	866	249	824	255
		F08	1375	1341	1301	1264	1226	375	1189	382	1154	391	1118	402
		F09	1440	1402	1366	1330	1295	414	1260	423	1224	430	1187	439
DD96TN1005CN	Y/Y1, Y2, G	F01	1366	1307	1248	1188	1130	255	1069	264	1007	273	938	282
		F02	1833	1785	1736	1688	1640	509	1593	519	1543	529	1497	540
		F03	1295	1230	1168	1105	1044	227	981	236	911	244	843	252
		F04^	1634	1578	1525	1471	1416	382	1363	391	1311	400	1265	411
		F05	2028	1994	1937	1899	1863	683	1814	690	1769	702	1724	713
		F06	1773	1721	1671	1621	1571	465	1521	474	1470	485	1421	495
		F07	1908	1860	1813	1766	1720	569	1672	581	1624	591	1578	602
		F08	1965	1919	1873	1829	1783	617	1736	627	1688	637	1643	648
		F09	2096	2053	2014	1973	1931	726	1890	736	1849	752	1803	758

NOTE:
^ Default speed

HEATING AIRFLOW

MODEL	THERMOSTAT CALL	TAP #	EXTERNAL STATIC PRESSURE (INCHES WATER COLUMN)												
			0.1		0.2		0.3		0.4		0.5		0.6	0.7	0.8
			CFM	Rise	CFM	Rise	CFM	Rise	CFM	Rise	CFM	Rise	CFM	CFM	CFM
DD96TN0403BN	W/W1	F01^	727	34	677	37	623	40	565	44	510	49	455	403	351
		F03^^	632	N/A	574	N/A	510	N/A	448	N/A	388	N/A	332	277	234
		F04	878	28	839	30	797	31	751	33	701	36	653	607	561
	W2	F02^	923	39	882	40	841	42	798	45	752	47	704	660	614
		F04	878	41	839	42	797	45	751	47	701	51	653	607	561
		F05	1106	32	1076	33	1044	34	1010	35	974	37	939	899	860
DD96TN0603BN	W/W1	F01^	1167	32	1118	33	1069	35	1022	37	974	38	928	877	833
		F03^^	680	N/A	609	N/A	532	N/A	460	N/A	397	N/A	337	252	201
		F04^^	903	N/A	839	N/A	783	N/A	719	N/A	661	N/A	601	546	497
	W2	F02^	1332	40	1289	41	1245	43	1200	44	1160	46	1120	1081	1036
		F04^^	903	N/A	839	N/A	783	N/A	719	N/A	661	N/A	601	546	497
		F05	1248	43	1204	44	1159	46	1113	48	1071	50	1028	983	943
DD96TN0803BN	W/W1	F01^	1167	43	1124	44	1087	46	1040	48	995	50	954	916	869
		F03^^	733	N/A	669	N/A	606	N/A	543	N/A	482	N/A	424	372	300
		F04	1217	41	1174	42	1130	44	1086	46	1045	48	1003	962	925
	W2	F02^	1317	54	1277	56	1240	57	1201	59	1161	61	1122	1081	1045
		F04	1217	58	1174	61	1130	63	1086	65	1045	68	1003	962	925
		F05	1300	55	1263	56	1225	58	1186	60	1142	62	1099	1062	1023
DD96TN1005CN	W/W1	F01^	1366	46	1307	48	1248	50	1188	52	1130	55	1069	1007	938
		F03	1295	48	1230	51	1168	53	1105	56	1044	60	981	911	843
		F04^^	1634	N/A	1578	N/A	1525	N/A	1471	N/A	1416	N/A	1363	1311	1265
	W2	F02^	1833	48	1785	50	1736	51	1688	53	1640	54	1593	1543	1497
		F04	1634	54	1578	56	1525	58	1471	60	1416	62	1363	1311	1265
		F05	2028	44	1994	45	1937	46	1899	47	1863	48	1814	1769	1724

NOTE:
^ Default speed
^^NOT RECOMMENDED FOR HEATING

Cooling & Circulation Airflow

MODEL	THERMOSTAT CALL	TAP #	EXTERNAL STATIC PRESSURE (INCHES WATER COLUMN)											
			0.1	0.2	0.3	0.4	0.5		0.6		0.7		0.8	
			CFM	CFM	CFM	CFM	CFM	Watts	CFM	Watts	CFM	Watts	CFM	Watts
DR96TN0303AN	Y/Y1, Y2, G	F01	753	708	663	616	568	118	513	125	470	131	423	136
		F02	915	883	845	809	773	177	730	182	690	189	650	196
		F03	529	518	461	394	343	75	288	81	223	86	N/A	N/A
		F04^	880	843	807	768	723	161	683	168	643	175	590	181
		F05	1055	1022	990	959	930	241	891	249	858	256	825	263
		F06	1101	1072	1040	1010	980	269	949	275	918	283	881	290
		F07	1190	1162	1134	1104	1077	322	1042	328	1013	336	982	345
		F08	1183	1157	1130	1103	1077	322	1047	331	1018	338	988	347
		F09	1229	1206	1178	1153	1128	359	1100	365	1070	372	1042	328
DR96TN0403AN	Y/Y1, Y2, G	F01	733	691	650	602	553	111	498	117	448	124	402	130
		F02	1051	1024	996	966	935	240	907	248	868	254	836	262
		F03	665	620	570	517	462	93	407	100	359	104	309	109
		F04^	915	881	846	814	780	174	737	180	695	186	652	193
		F05	1138	1114	1092	1064	1035	288	1006	298	977	307	947	313
		F06	887	855	823	790	751	164	705	170	666	176	608	183
		F07	1189	1163	1138	1111	1085	321	1059	331	1032	341	1001	349
		F08	1266	1243	1218	1197	1172	372	1148	383	1123	394	1099	400
		F09	1342	1324	1305	1280	1263	440	1239	452	1216	463	1193	473
DR96TN0603AN	Y/Y1, Y2, G	F01	900	867	830	798	758	175	718	182	682	189	645	196
		F02	1292	1272	1248	1227	1206	429	1184	438	1162	447	1137	456
		F03	688	649	603	551	499	104	447	110	405	115	359	120
		F04^	866	830	797	759	717	161	675	168	634	175	591	181
		F05	1223	1195	1176	1149	1124	370	1101	381	1074	388	1047	398
		F06	1037	1004	975	950	921	243	886	251	853	258	823	266
		F07	1079	1053	1025	1000	970	271	941	278	911	285	873	292
		F08	1128	1099	1075	1050	1022	300	993	310	965	319	937	326
		F09	1171	1148	1124	1096	1070	330	1045	339	1017	348	988	355
DR96TN0603BN	Y/Y1, Y2, G	F01	914	864	815	762	704	150	654	155	604	162	560	168
		F02	1121	1083	1041	996	953	230	906	236	861	245	818	252
		F03	758	696	636	572	512	104	460	110	412	115	N/A	N/A
		F04^	960	917	864	812	764	164	708	171	661	179	614	184
		F05	1164	1123	1084	1042	1003	249	960	258	920	268	871	276
		F06	1219	1180	1141	1102	1062	277	1020	286	978	294	940	303
		F07	1273	1240	1207	1171	1128	309	1089	318	1051	327	1012	336
		F08	1307	1270	1235	1198	1160	329	1122	336	1083	346	1043	354
		F09	1427	1390	1362	1327	1297	408	1260	414	1224	423	1193	434
DR96TN0803BN	Y/Y1, Y2, G	F01	1205	1169	1131	1091	1053	261	1014	270	974	279	934	289
		F02	1415	1385	1355	1322	1291	394	1255	403	1219	407	1186	417
		F03	696	635	568	500	442	91	390	96	336	101	255	104
		F04^	1152	1112	1076	1035	996	239	954	248	916	258	868	267
		F05	1321	1287	1251	1217	1181	328	1146	336	1112	345	1072	355
		F06	901	851	801	746	690	142	638	149	587	154	543	160
		F07	1112	1076	1032	992	949	219	905	228	858	236	819	246
		F08	1290	1252	1215	1182	1143	311	1107	319	1071	329	1032	337
		F09	1471	1440	1409	1377	1347	427	1314	436	1283	446	1247	456
DR96TN0804CN	Y/Y1, Y2, G	F01	1289	1234	1180	1122	1058	217	991	226	917	234	840	242
		F02	1836	1784	1741	1703	1664	496	1628	515	1585	528	1537	540
		F03	1297	1246	1199	1142	1083	224	1020	233	949	242	872	250
		F04^	1194	1137	1079	1014	948	188	873	197	792	205	712	212
		F05	1748	1696	1650	1612	1574	438	1526	450	1478	462	1428	474
		F06	1451	1399	1354	1309	1256	288	1200	298	1142	306	1077	316
		F07	1587	1534	1489	1445	1406	352	1354	362	1298	372	1244	383
		F08	1683	1633	1589	1546	1502	405	1460	416	1406	428	1355	440
		F09	1919	1890	1846	1807	1771	566	1735	585	1694	600	1650	613
DR96TN1004CN	Y/Y1, Y2, G	F01	1475	1421	1369	1314	1260	307	1207	317	1152	326	1097	337
		F02	1791	1741	1699	1652	1609	482	1561	493	1513	504	1465	516
		F03	924	846	767	684	606	124	529	130	463	136	398	142
		F04^	1259	1197	1138	1074	1015	218	947	226	885	236	821	244
		F05	1710	1660	1613	1583	1517	427	1470	440	1421	451	1374	462
		F06	1592	1536	1486	1436	1383	363	1331	373	1281	383	1233	393
		F07	1627	1574	1524	1474	1423	382	1370	392	1320	403	1271	414
		F08	1921	1879	1840	1791	1751	577	1705	588	1656	604	1610	617
		F09	2026	1981	1929	1901	1858	659	1819	677	1773	685	1733	701
DR96TN1005CN	Y/Y1, Y2, G	F01	1259	1197	1138	1074	1015	218	947	226	885	236	821	244
		F02	1791	1741	1699	1652	1609	482	1561	493	1513	504	1465	516
		F03	1176	1108	1044	980	913	188	845	197	779	206	718	213
		F04^	1347	1286	1231	1172	1115	247	1055	256	995	265	933	275
		F05	1921	1879	1840	1791	1751	577	1705	588	1656	604	1610	617
		F06	1446	1404	1335	1280	1226	291	1171	300	1117	309	1062	319
		F07	1618	1567	1510	1460	1413	379	1364	390	1312	401	1262	411
		F08	2009	1964	1918	1886	1852	656	1811	671	1759	676	1722	693
		F09	2161	2122	2084	2048	2010	739	1973	755	1940	776	1914	796
DR96TN1205DN	Y/Y1, Y2, G	F01	1766	1712	1666	1612	1558	387	1506	401	1450	412	1395	425
		F02	2205	2157	2110	2064	2021	679	1974	694	1925	709	1879	726
		F03	1118	1035	952	860	750	149	663	156	590	165	519	171
		F04^	1684	1620	1561	1499	1438	345	1378	358	1318	371	1259	383
		F05	2031	1981	1933	1901	1850	541	1799	556	1750	570	1702	585
		F06	1220	1145	1070	995	907	177	811	187	725	194	651	201
		F07	1357	1311	1243	1175	1107	223	1021	233	932	243	861	254
		F08	1906	1877	1828	1778	1726	474	1674	487	1622	501	1568	515
		F09	2454	2396	2347	2296	2250	889	2202	905	2157	922	2113	941

NOTE:

^ Default speed

HEATING AIRFLOW															
MODEL	THERMOSTAT CALL	TAP #	EXTERNAL STATIC PRESSURE (INCHES WATER COLUMN)												
			0.1		0.2		0.3		0.4		0.5		0.6	0.7	0.8
			CFM	Rise	CFM	Rise	CFM	Rise	CFM	Rise	CFM	Rise	CFM	CFM	CFM
DR96TN0303AN	W/W1	F01^	753	25	708	26	663	28	616	30	568	33	513	470	423
		F03^^	529	N/A	518	N/A	461	N/A	394	N/A	343	N/A	288	223	N/A
		F04	880	21	843	22	807	23	768	24	723	26	683	643	590
	W2	F02^	915	29	883	30	845	32	809	33	773	34	730	690	650
		F04	880	30	843	32	807	33	768	35	723	37	683	643	590
		F05	1055	25	1022	26	990	27	959	28	930	29	891	858	825
DR96TN0403AN	W/W1	F01^	733	34	691	36	650	38	602	41	553	45	498	448	402
		F03^^	665	N/A	620	N/A	570	N/A	517	N/A	462	N/A	407	359	309
		F04	915	27	881	28	846	29	814	31	780	32	737	695	652
	W2	F02^	1051	34	1024	35	996	36	966	37	935	38	907	868	836
		F04	915	39	881	40	846	42	814	44	780	46	737	695	652
		F05	1138	31	1114	32	1092	33	1064	33	1035	34	1006	977	947
DR96TN0603AN	W/W1	F01^	900	40	867	42	830	44	798	46	758	48	718	682	645
		F03^^	688	N/A	649	N/A	603	N/A	551	N/A	499	N/A	447	405	359
		F04	866	42	830	44	797	46	759	48	717	50	675	634	591
	W2	F02^	1292	41	1272	42	1248	43	1227	43	1206	44	1184	1162	1137
		F04^^	866	N/A	830	N/A	797	N/A	759	N/A	717	N/A	675	634	591
		F05	1223	44	1195	45	1176	45	1149	46	1124	47	1101	1074	1047
DR96TN0603BN	W/W1	F01^	914	41	864	43	815	46	762	49	704	53	654	604	560
		F03^^	758	N/A	696	N/A	636	N/A	572	N/A	512	N/A	460	412	N/A
		F04	960	39	917	41	864	43	812	46	764	49	708	661	614
	W2	F02^	1121	48	1083	49	1041	51	996	54	953	56	906	861	818
		F04^^	960	N/A	917	N/A	864	N/A	812	N/A	764	N/A	708	661	614
		F05	1164	46	1123	47	1084	49	1042	51	1003	53	960	920	871
DR96TN0803BN	W/W1	F01^	1205	41	1169	43	1131	44	1091	46	1053	47	1014	974	934
		F03^^	696	N/A	635	N/A	568	N/A	500	N/A	442	N/A	390	336	255
		F04	1152	43	1112	45	1076	46	1035	48	996	50	954	916	868
	W2	F02^	1415	50	1385	51	1355	52	1322	54	1291	55	1255	1219	1186
		F04^^	1152	N/A	1112	N/A	1076	N/A	1035	N/A	996	N/A	954	916	868
		F05	1321	54	1287	55	1251	57	1217	58	1181	60	1146	1112	1072
DR96TN0804CN	W/W1	F01^	1289	39	1234	40	1180	42	1122	44	1058	47	991	917	840
		F03	1297	38	1246	40	1199	42	1142	44	1083	46	1020	949	872
		F04	1194	42	1137	44	1079	46	1014	49	948	52	873	792	712
	W2	F02^	1836	39	1784	40	1741	41	1703	42	1664	43	1628	1585	1537
		F04^^	1194	N/A	1137	N/A	1079	N/A	1014	N/A	948	N/A	873	792	712
		F05	1748	41	1696	42	1650	43	1612	44	1574	45	1526	1478	1428
DR96TN1004CN	W/W1	F01^	1475	42	1421	44	1369	45	1314	47	1260	49	1207	1152	1097
		F03^^	924	N/A	846	N/A	767	N/A	684	N/A	606	N/A	529	463	398
		F04	1259	49	1197	52	1138	55	1074	58	1015	61	947	885	821
	W2	F02^	1791	50	1741	51	1699	52	1652	54	1609	55	1561	1513	1465
		F04^^	1259	N/A	1197	N/A	1138	N/A	1074	N/A	1015	N/A	947	885	821
		F05	1710	52	1660	54	1613	55	1583	56	1517	59	1470	1421	1374
DR96TN1005CN	W/W1	F01^	1259	49	1197	52	1138	55	1074	58	1015	61	947	885	821
		F03^^	1176	N/A	1108	N/A	1044	N/A	980	N/A	913	N/A	845	779	718
		F04	1347	46	1286	48	1231	51	1172	53	1115	56	1055	995	933
	W2	F02^	1791	50	1741	51	1699	52	1652	54	1609	55	1561	1513	1465
		F04^^	1347	N/A	1286	N/A	1231	N/A	1172	N/A	1115	N/A	1055	995	933
		F05	1921	46	1879	47	1840	48	1791	50	1751	51	1705	1656	1610
DR96TN1205DN	W/W1	F01^	1766	42	1712	44	1666	45	1612	46	1558	48	1506	1450	1395
		F03^^	1118	N/A	1035	N/A	952	N/A	860	N/A	750	N/A	663	590	519
		F04	1684	44	1620	46	1561	48	1499	50	1438	52	1378	1318	1259
	W2	F02^	2205	48	2157	49	2110	51	2064	52	2021	53	1974	1925	1879
		F04^^	1684	N/A	1620	N/A	1561	N/A	1499	N/A	1438	N/A	1378	1318	1259
		F05	2031	53	1981	54	1933	55	1901	56	1850	58	1799	1750	1702

NOTE:

^ Default speed

^^NOT RECOMMENDED FOR HEATING

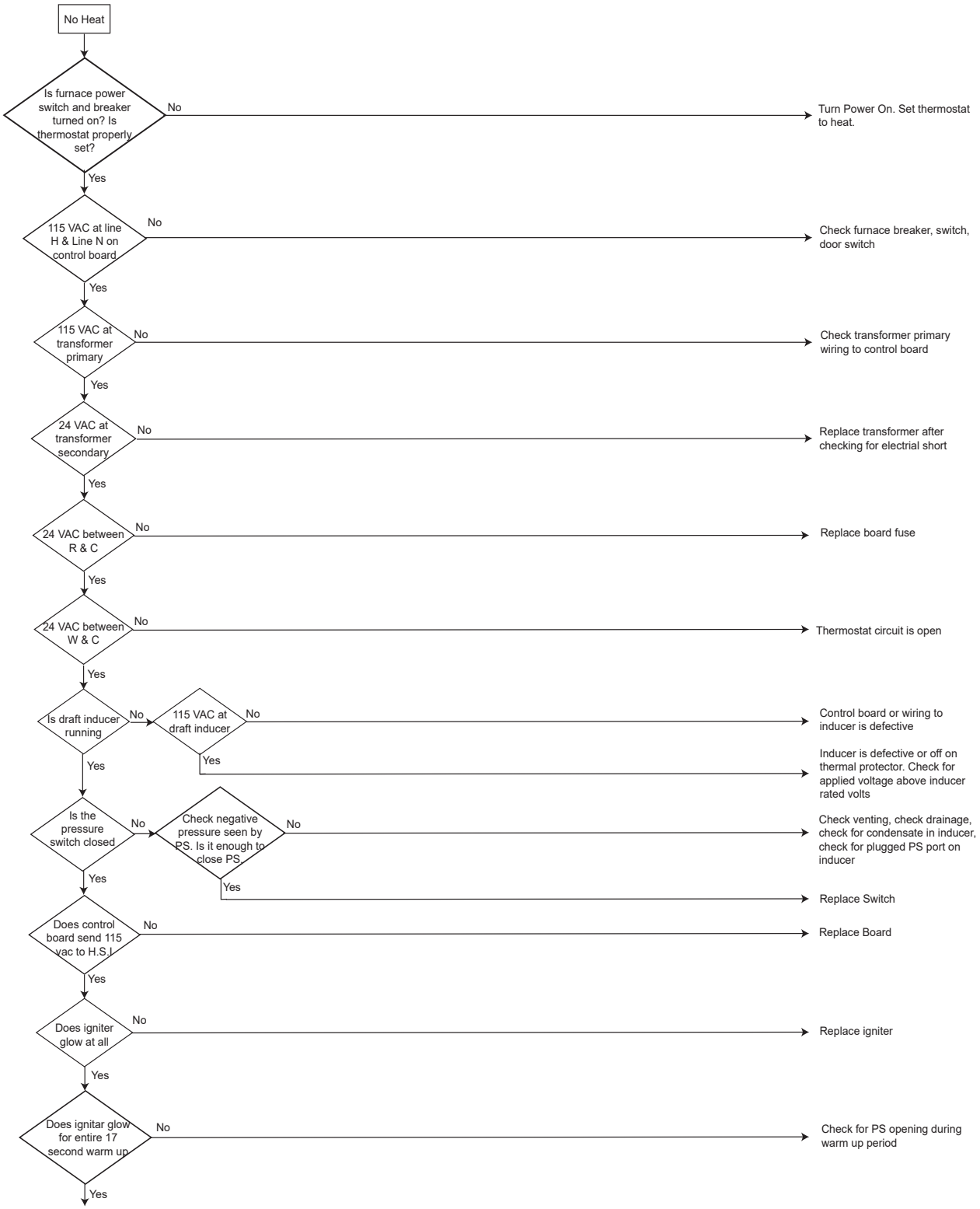
No Heat
Is furnace power switch and breaker turned on? Is thermostat properly set?
No
Turn Power On. Set thermostat to heat.
Yes
115 VAC at line H & Line N on control board
No
Check furnace breaker, switch, door switch
Yes
115 VAC at transformer primary
No
Check transformer primary wiring to control board
Yes
24 VAC at transformer secondary
No
Replace transformer after checking for electrial short
Yes
24 VAC between R & C
No
Replace board fuse
Yes
24 VAC between W & C
No
Thermostat circuit is open
Yes
Is draft inducer running
No
115 VAC at draft inducer
No
Control board or wiring to inducer is defective
Yes
Inducer is defective or off on thermal protector. Check for applied voltage above inducer rated volts
Yes
Is the pressure switch closed
No
Check negative pressure seen by PS. Is it enough to close PS.
No
Check venting, check drainage, check for condensate in inducer, check for plugged PS port on inducer
Yes
Replace Switch
Yes
Does control board send 115 vac to H.S.I
No
Replace Board
Yes
Does igniter glow at all
No
Replace igniter
Yes
Does ignitar glow for entire 17 second warm up
No
Check for PS opening during warm up period
Yes

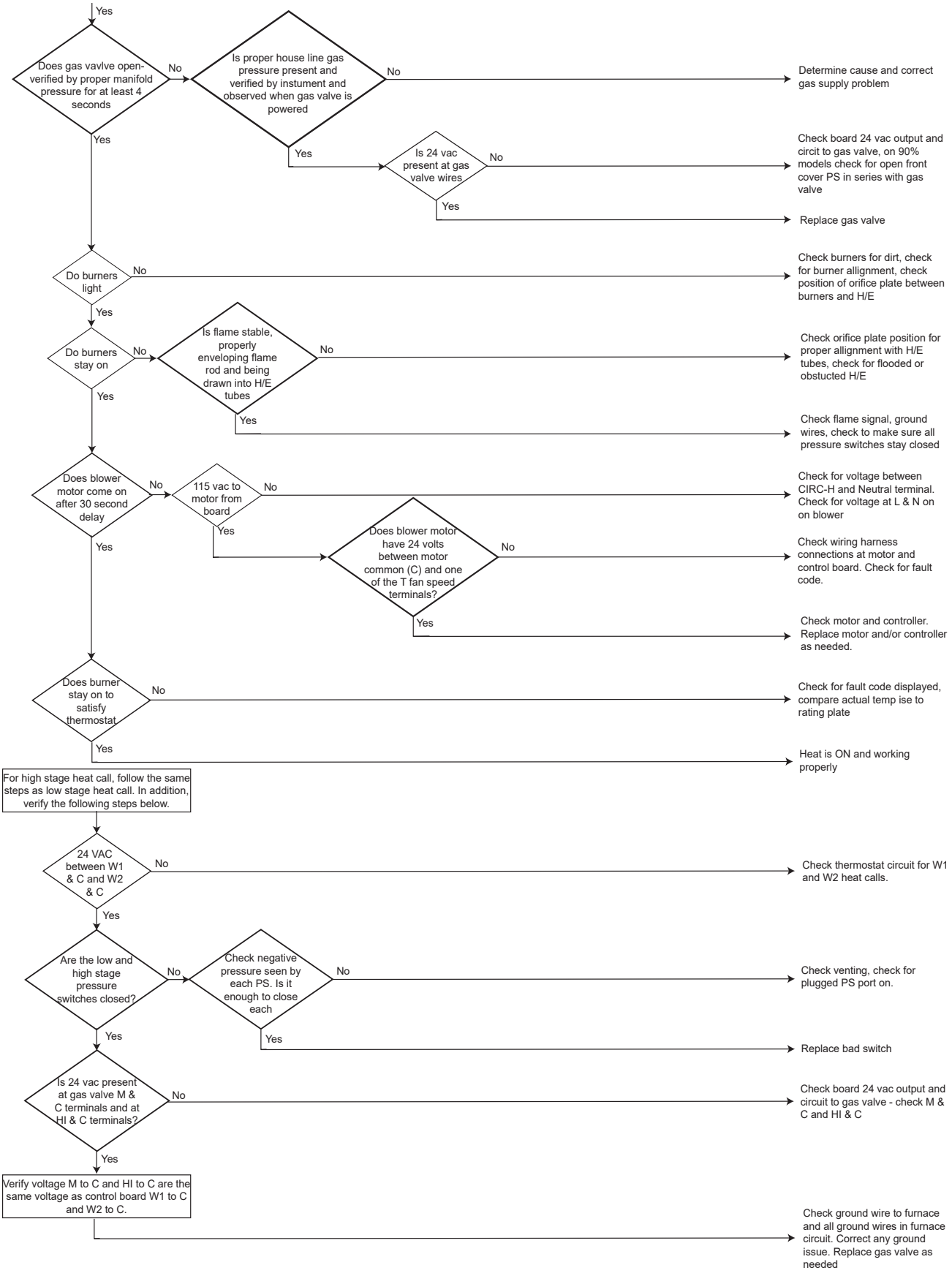
Yes
Does gas vavlve open-verified by proper manifold pressure for at least 4 seconds
No
Is proper house line gas pressure present and verified by instument and observed when gas valve is powered
No
Determine cause and correct gas supply problem
Yes
Yes
Is 24 vac present at gas valve wires
No
Check board 24 vac output and circit to gas valve, on 90% models check for open front cover PS in series with gas valve
Yes
Replace gas valve
Do burners light
No
Check burners for dirt, check for burner allignment, check position of orifice plate between burners and H/E
Yes
Do burners stay on
No
Is flame stable, properly enveloping flame rod and being drawn into H/E tubes
No
Check orifice plate position for proper allignment with H/E tubes, check for flooded or obstucted H/E
Yes
Yes
Check flame signal, ground wires, check to make sure all pressure switches stay closed
Does blower motor come on after 30 second delay
No
115 vac to motor from board
No
Check for voltage between CIRC-H and Neutral terminal. Check for voltage at L & N on on blower
Yes
Yes
Does blower motor have 24 volts between motor common (C) and one of the T fan speed terminals?
No
Check wiring harness connections at motor and control board. Check for fault code.
Yes
Check motor and controller. Replace motor and/or controller as needed.
Does burner stay on to satisfy thermostat
No
Check for fault code displayed, compare actual temp ise to rating plate
Yes
Heat is ON and working properly
For high stage heat call, follow the same steps as low stage heat call. In addition, verify the following steps below.
24 VAC between W1 & C and W2 & C
No
Check thermostat circuit for W1 and W2 heat calls.
Yes
Are the low and high stage pressure switches closed?
No
Check negative pressure seen by each PS. Is it enough to close each
No
Check venting, check for plugged PS port on.
Yes
Yes
Replace bad switch
Is 24 vac present at gas valve M & C terminals and at HI & C terminals?
No
Check board 24 vac output and circuit to gas valve - check M & C and HI & C
Yes
Verify voltage M to C and HI to C are the same voltage as control board W1 to C and W2 to C.
Check ground wire to furnace and all ground wires in furnace circuit. Correct any ground issue. Replace gas valve as needed

Error Code:
E0 - Lockout due to an excessive number of ignition retries (3 total)

Applicable Models:
All 90% models

Method of Error Detection:
Furnace fails to ignite after 3 retires

Error Decision Conditions:
No gas or low gas pressure at manifold. Bad hot surface ignitor - not glowing, dirty flame sensor

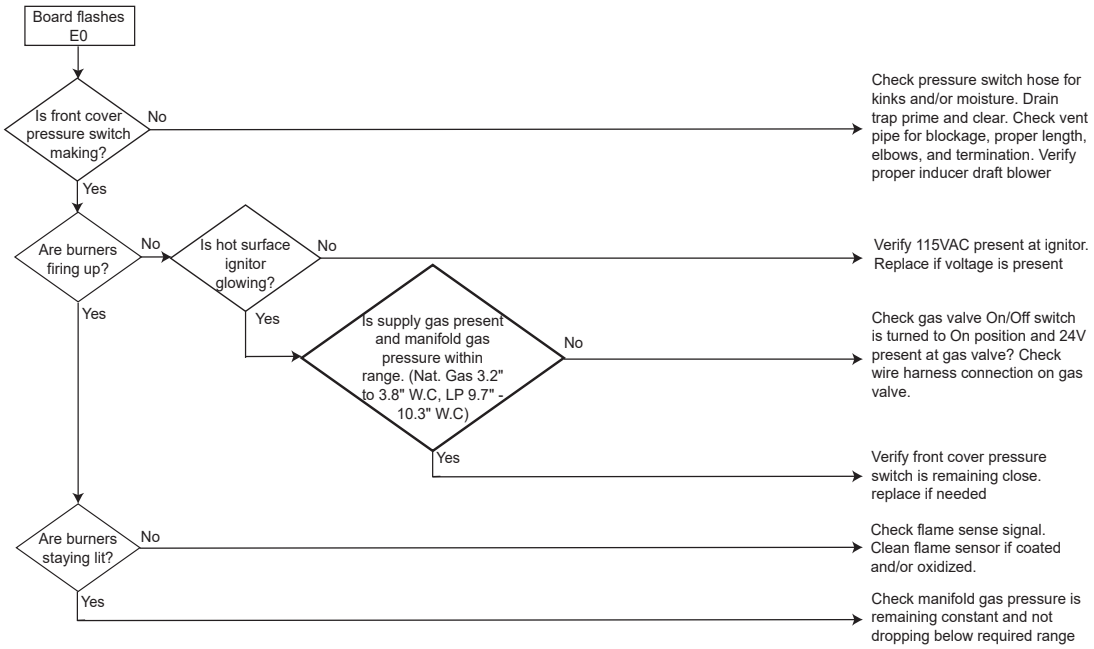

Error Code:
E1 - Low pressure switch circuit closed at the start of heating cycle.

E2 - Low pressure switch circuit is not closed.

E8 - High pressure switch circuit closed at the start of heating cycle. Furnace is operating on low stage only.

E9 - High pressure switch circuit is not closed. Furnace is operating on low stage only.

Applicable Models:
For Goodman/Amana brand
AR9T, GR9T

For Daikin
DR**TN

Method of Error Detection:
Pressure Switch during heating operation.

Error Decision Conditions:
Pressure switch circuit closed when it should be open.
Pressure switch circuit open when it should be closed

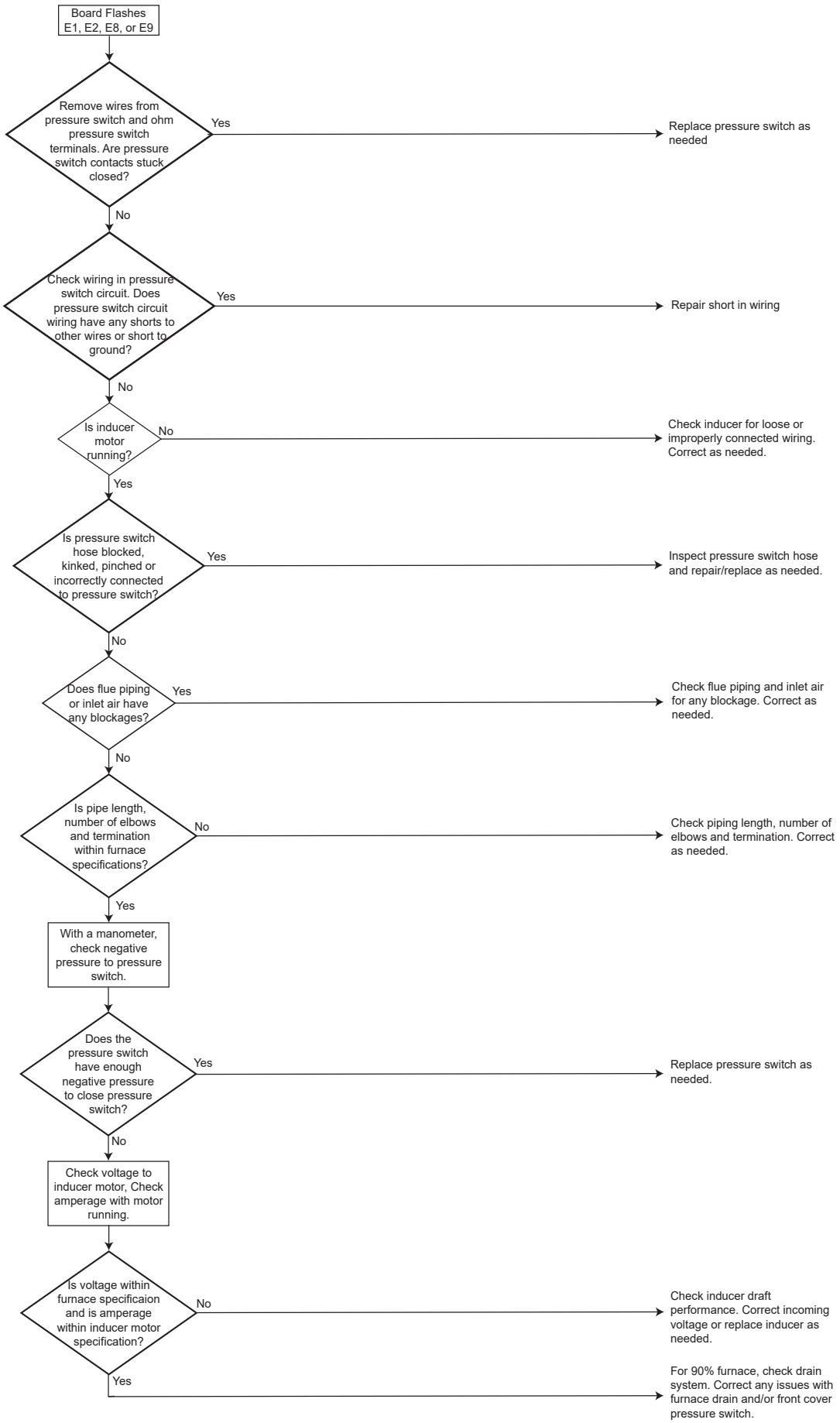

Error Code:
Eb - Gas valve is not energized when it should be. External Gas Valve Error.

EC - Gas valve is energized when it should not be. Internal Gas Valve Error.

Applicable Models:
(for Goodman/Amana brand)
All furnace models

(for Daikin)
All furnace models, except Daikin modulating furnaces

Method of Error Detection:
No voltage to gas valve when voltage should be present.
Voltage to gas valve with no call for heat.

Error Decision Conditions:
No voltage reading at gas valve with a call for heat.
Voltage reading at gas valve with no call for heat.

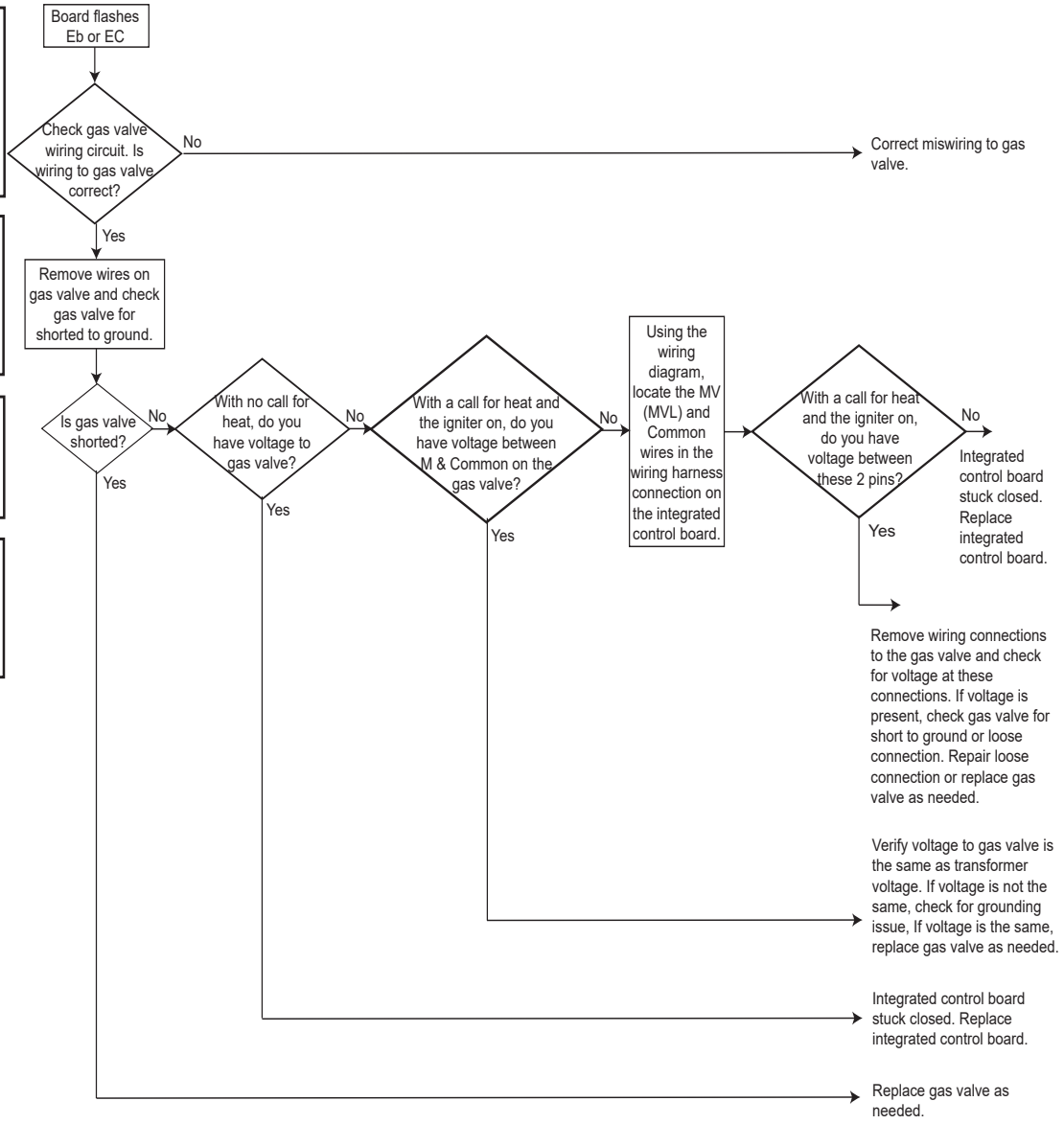

WIRING DIAGRAM

WARNING

HIGH VOLTAGE!
DISCONNECT ALL POWER BEFORE SERVICING OR INSTALLING THIS UNIT. MULTIPLE POWER SOURCES MAY BE PRESENT. FAILURE TO DO SO MAY CAUSE PROPERTY DAMAGE, PERSONAL INJURY OR DEATH.

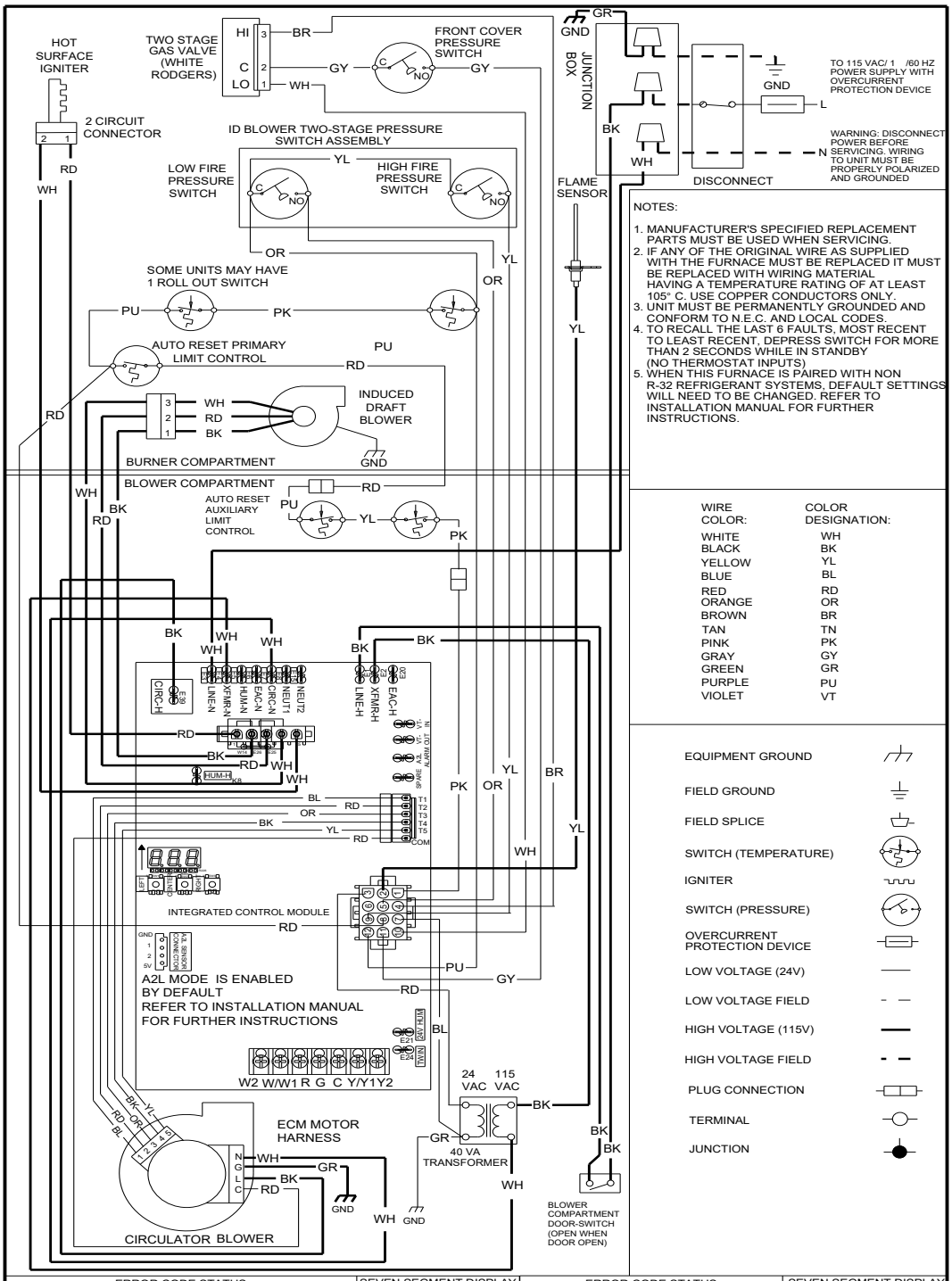

NOTES:

1. MANUFACTURER'S SPECIFIED REPLACEMENT PARTS MUST BE USED WHEN SERVICING.
2. IF ANY OF THE ORIGINAL WIRE AS SUPPLIED WITH THE FURNACE MUST BE REPLACED IT MUST BE REPLACED WITH WIRING MATERIAL HAVING A TEMPERATURE RATING OF AT LEAST 105° C. USE COPPER CONDUCTORS ONLY.
3. UNIT MUST BE PERMANENTLY GROUNDED AND CONFORM TO N.E.C. AND LOCAL CODES.
4. TO RECALL THE LAST 6 FAULTS, MOST RECENT TO LEAST RECENT, DEPRESS SWITCH FOR MORE THAN 2 SECONDS WHILE IN STANDBY (NO THERMOSTAT INPUTS)
5. WHEN THIS FURNACE IS PAIRED WITH NON R-32 REFRIGERANT SYSTEMS, DEFAULT SETTINGS WILL NEED TO BE CHANGED. REFER TO INSTALLATION MANUAL FOR FURTHER INSTRUCTIONS.

WIRE COLOR:	COLOR DESIGNATION:
WHITE	WH
BLACK	BK
YELLOW	YL
BLUE	BL
RED	RD
ORANGE	OR
BROWN	BR
TAN	TN
PINK	PK
GRAY	GY
GREEN	GR
PURPLE	PU
VIOLET	VT

EQUIPMENT GROUND
FIELD GROUND
FIELD SPLICE
SWITCH (TEMPERATURE)
IGNITER
SWITCH (PRESSURE)
OVERCURRENT PROTECTION DEVICE
LOW VOLTAGE (24V)
LOW VOLTAGE FIELD
HIGH VOLTAGE (115V)
HIGH VOLTAGE FIELD
PLUG CONNECTION
TERMINAL
JUNCTION

ERROR CODE STATUS READ CODES FROM LEFT TO RIGHT	SEVEN SEGMENT DISPLAY Seg#3	Seg#2	Seg#1
INTERNAL FAULTS OR IRQ LOSS	E	E	E
LOCKOUT DUE TO EXCESSIVE RETRIES RECYCLE	E	E	0
LOW STAGE PRESSURE SWITCH STUCK CLOSED	E	E	1
LOW STAGE PRESSURE SWITCH OPEN	E	E	2
OPEN HIGH LIMIT SWITCH	E	E	3
FLAME DETECTED WHEN NO FLAME SHOULD BE PRESENT	E	E	4
OPEN FUSE	E	E	5
LOW FLAME SIGNAL	E	E	6
IGNITOR RELAY FAULT	E	E	L
HIGH STAGE PRESSURE SWITCH STUCK CLOSED	E	E	8
HIGH STAGE PRESSURE SWITCH OPEN	E	E	9
REVERSED LINE POLARITY OR GROUNDING ERROR	E	E	A
INTERNAL GAS VALVE ERROR	E	E	b
EXTERNAL GAS VALVE ERROR	E	E	C
OPEN ROLLOUT SWITCH	E	1	1
IGNITOR OPEN	E	E	n
INDUCER RELAY ERROR	E	E	J

ERROR CODE STATUS READ CODES FROM LEFT TO RIGHT	SEVEN SEGMENT DISPLAY Seg#3	Seg#2	Seg#1
TWIN ERROR	E	E	H
GROUNDING ERROR	E	1	0
LOW CIRCULATOR CURRENT	E	b	L
CIRCULATOR CURRENT UNEXPECTED	E	b	U
A2L COMMUNICATION ALARM	E	A	F
A2L LEAKAGE ALARM	E	A	L
A2L INTERNAL ALARM	E	A	S
A2L RELAY ALARM	E	A	r

0140F20004-B

Wiring is subject to change. Always refer to the wiring diagram on the unit for the most up-to-date wiring.