DAIKIN Service Instructions

DM92SN, DM96SN & DC96SN MODELS

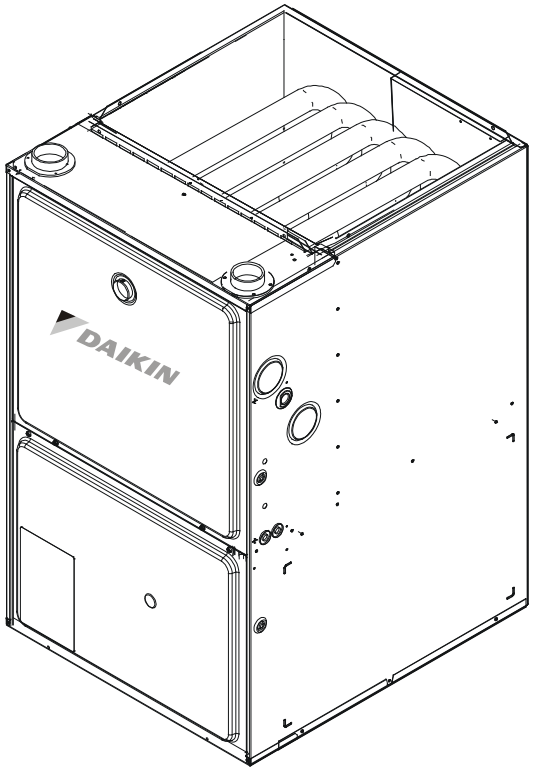

WARNING

ONLY PERSONNEL THAT HAVE BEEN TRAINED TO INSTALL, ADJUST, SERVICE, MAINTENANCE OR REPAIR (HEREINAFTER, "SERVICE") THE EQUIPMENT SPECIFIED IN THIS MANUAL SHOULD SERVICE THE EQUIPMENT.

THIS EQUIPMENT IS NOT INTENDED FOR USE BY PERSONS (INCLUDING CHILDREN) WITH REDUCED PHYSICAL, SENSORY OR MENTAL CAPABILITIES, OR LACK OF EXPERIENCE AND KNOWLEDGE, UNLESS THEY HAVE BEEN GIVEN SUPERVISION OR INSTRUCTION CONCERNING USE OF THE APPLIANCE BY A PERSON RESPONSIBLE FOR THEIR SAFETY.

CHILDREN SHOULD BE SUPERVISED TO ENSURE THAT THEY DO NOT PLAY WITH THE EQUIPMENT.

THE MANUFACTURER WILL NOT BE RESPONSIBLE FOR ANY INJURY OR PROPERTY DAMAGE ARISING FROM IMPROPER SUPERVISION, SERVICE OR SERVICE PROCEDURES. IF YOU SERVICE THIS UNIT, YOU ASSUME RESPONSIBILITY FOR ANY INJURY OR PROPERTY DAMAGE WHICH MAY RESULT. IN ADDITION, IN JURISDICTIONS THAT REQUIRE ONE OR MORE LICENSES TO SERVICE THE EQUIPMENT SPECIFIED IN THIS MANUAL, ONLY LICENSED PERSONNEL SHOULD SERVICE THE EQUIPMENT. IMPROPER SUPERVISION, INSTALLATION, ADJUSTMENT, SERVICING, MAINTENANCE OR REPAIR OF THE EQUIPMENT SPECIFIED IN THIS MANUAL, OR ATTEMPTING TO INSTALL, ADJUST, SERVICE OR REPAIR THE EQUIPMENT SPECIFIED IN THIS MANUAL WITHOUT PROPER SUPERVISION OR TRAINING MAY RESULT IN PRODUCT DAMAGE, PROPERTY DAMAGE, PERSONAL INJURY OR DEATH.

This manual is to be used by qualified, professionally trained HVAC technicians only.

Daikin does not assume any responsibility for property damage or personal injury due to improper service procedures or services performed by an unqualified person.

The material in this manual does not supersede manufacturers installation and operation instructions.

WARNING

DO NOT BYPASS SAFETY DEVICES.

RSD6612021r1
March 2023

Copyright © 2021-2023 ***DAIKIN COMFORT TECHNOLOGIES MANUFACTURING, L.P.***

IMPORTANT INFORMATION

Pride and workmanship go into every product to provide our customers with quality products. It is possible, however, that during its lifetime a product may require service. Products should be serviced only by a qualified service technician who is familiar with the safety procedures required in the repair and who is equipped with the proper tools, parts, testing instruments and the appropriate service manual. **REVIEW ALL SERVICE INFORMATION IN THE APPROPRIATE SERVICE MANUAL BEFORE BEGINNING REPAIRS.**

IMPORTANT NOTICES

RECOGNIZE SAFETY SYMBOLS, WORDS AND LABELS

WARNING

THIS UNIT SHOULD NOT BE CONNECTED TO, OR USED IN CONJUNCTION WITH, ANY DEVICES THAT ARE NOT DESIGN CERTIFIED FOR USE WITH THIS UNIT OR HAVE NOT BEEN TESTED AND APPROVED BY THE MANUFACTURER. SERIOUS PROPERTY DAMAGE OR PERSONAL INJURY, REDUCED UNIT PERFORMANCE AND/OR HAZARDOUS CONDITIONS MAY RESULT FROM THE USE OF DEVICES THAT HAVE NOT BEEN APPROVED OR CERTIFIED BY THE MANUFACTURER.

WARNING

HIGH VOLTAGE
DISCONNECT ALL POWER BEFORE SERVICING OR INSTALLING THIS UNIT. MULTIPLE POWER SOURCES MAY BE PRESENT. FAILURE TO DO SO MAY CAUSE PROPERTY DAMAGE, PERSONAL INJURY OR DEATH.

WARNING

TO PREVENT THE RISK OF PROPERTY DAMAGE, PERSONAL INJURY OR DEATH, DO NOT STORE COMBUSTIBLE MATERIALS OR USE GASOLINE OR OTHER FLAMMABLE LIQUIDS OR VAPORS IN THE VICINITY OF THIS APPLIANCE.

IMPORTANT INFORMATION

WARNING

IF THE INFORMATION IN THESE INSTRUCTIONS IS NOT FOLLOWED EXACTLY, A FIRE OR EXPLOSION MAY RESULT CAUSING PROPERTY DAMAGE, PERSONAL INJURY OR LOSS OF LIFE.

- DO NOT STORE OR USE GASOLINE OR OTHER FLAMMABLE VAPORS AND LIQUIDS IN THE VICINITY OF THIS OR ANY OTHER APPLIANCE.
- WHAT TO DO IF YOU SMELL GAS:
  - DO NOT TRY TO LIGHT ANY APPLIANCE.
  - DO NOT TOUCH ANY ELECTRICAL SWITCH; DO NOT USE ANY PHONE IN YOUR BUILDING.
  - IMMEDIATELY CALL YOUR GAS SUPPLIER FROM A NEIGHBOR'S PHONE. FOLLOW THE GAS SUPPLIER'S INSTRUCTIONS. IF YOU CANNOT REACH YOUR GAS SUPPLIER, CALL THE FIRE DEPARTMENT.
- INSTALLATION AND SERVICE MUST BE PERFORMED BY A QUALIFIED INSTALLER, SERVICE AGENCY OR THE GAS SUPPLIER.

WARNING

SHOULD OVERHEATING OCCUR OR THE GAS SUPPLY FAIL TO SHUT OFF, TURN OFF THE MANUAL GAS SHUTOFF VALVE EXTERNAL TO THE FURNACE BEFORE TURNING OFF THE ELECTRICAL SUPPLY.

To locate an authorized servicer, please consult your telephone book or the dealer from whom you purchased this product. For further assistance, please contact:

CONSUMER INFORMATION LINE - DAIKIN BRAND PRODUCTS
TOLL FREE 1-855-770-5678 (U.S. only)
email us at: customerservice@daikincomfort.com
fax us at: (713) 856-1821
(Not a technical assistance line for dealers.)

Outside the U.S., call 1-713-861-2500
(Not a technical assistance line for dealers.)
Your telephone company will bill you for the call.

IMPORTANT INFORMATION

FOR YOUR SAFETY READ BEFORE OPERATING

If you do not follow these instructions exactly,a fire or explosion may result causing property damage, personal injury or loss of life.

A. This appliance does not have a pilot. It is equipped with an ignition device which automatically lights the burner. Do not try to light the burner by hand.

B. BEFORE OPERATING smell all around the appliance area for gas. Be sure to smell next to the floor because some gas is heavier than air and will settle on the floor.

WHAT TO DO IF YOU SMELL GAS

- Do not try to light any appliance.
- Do not touch any electric switch; do not use any phone in your building.
- Immediately call your gas supplier from a neighbor's phone. Follow the gas supplier's instructions.
- If you cannot reach your gas supplier, call the fire department.

C. Use only your hand to push in or turn the gas control lever. Never use tools. If the lever will not push in or turn by hand, don't try to repair it, call a qualified service technician. Force or attempted repair may result in a fire or explosion.

D. Do not use this appliance if any part has been underwater. Immediately call a qualified service technician to inspect the appliance and to replace any part of the control system and any gas control which has been underwater.

LIRE AVANT DE METTRE EN MARCHELIRE

AVERTISSEMENT: Quiconque ne respecte pas à la lettre les instructions dans le presØht manuel risque de dØclencher un incendie ou une explosion entraînant des dommages matØriels, des lesions corporelles ou la perte de vies humaines.

A. Cet appareil ne comporte pas de veilleuse. Il est muni d'un dispositif d'allumage qui allume automatiquement le brßleur. Ne pas tenter d'allumer le brßleur manuellement.

B. AVANT DE LE FAIRE FONCTIONNER, renifler tout autour de l'appariel pour decØler une odeur de gaz. Renifler prØs du plancher, car certains gaz sont plus lourds que l'air et peuvent s'accumuler au niveau du sol.

QUE FAIRE S'IL Y A UNE ODEUR DE GAZ

- Ne pas tenter d'allumer d'appareils.
- Ne toucher à aucun interrupteur; ne pas vous servir des tØlØphones dans le bâtiment.
- Appelez immØdiatement votre fournisseur de gaz depuis un voisin. Suivez les instructions du fournisseur de gaz
- Si vous ne pouvez rejoindre le fournisseur de gaz, appelez le service des incendies.»

C. Ne pousser ou tourner la manette d'admission du gaz qu'à la main. Ne jamais emploer d'outil à cette fin. Si la manette reste coincØe, ne tenter pas de la rØparer; appelez un technicien qualifiØ Quiconque tente de forcer la manette ou de la rØparer peut provoquer une explosion ou un incendie.»

D. Ne pas se servir de cet appareil s'il a ØtØplongØdans l'eau, mØme partiellement. Faire inspecter l'appareil par un technicien qualifiØet remplacer toutr partie du systØme de contrôle et toute commande qui ont ØtØ plongØes dans l'eau.»

OPERATING INSTRUCTIONS

1. STOP! Read the safety infrmation above on this label.
2. Set the thermostat to lowest setting.
3. Turn off all electric power to the appliance.
4. This appliance is equipped with an ignition device which automatically lights the burner. Do not try to light the burner by hand.
5. Push the gas control lever to "OFF" Position. Do not force.
6. Wait five (5) minutes to clear out any gas. Then smell for gas, including near the floor. If you then smell gas, STOP! Follow "B" in the safety. information above on this label if you don't smell gas, go to next step.
7. Push gas control lever to "ON".
8. Replace access panel.
9. Turn on all electric power to the appliance.
10. Set thermostat to desired setting.
11. If the appliance will not operate, follow the instructions "To Turn Off Gas To Appliance" and call your service technician or gas company.

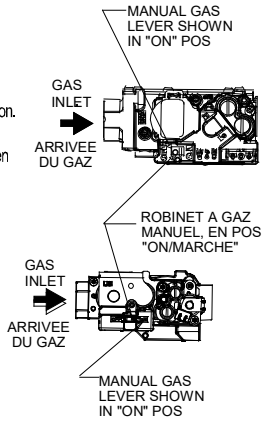

MISE EN MARCHE

1. ARRÊTEZ Lisez les instructions de sØuritØdans la section supØrieure de cette Øtiquette.
2. RØgler le thermostat à la tempØrature la plus basse.
3. Couper l'alimentation Ølectrique de l'appareil.
4. Cet appareil menager etant dote d'un systeme d'allumage automatique, ne pas essayer à allumer le brßleur manuellement.
5. Pousse le levier du contrÔle du gaz a "OFF/ ARRET" position.
6. Attendre cinq (5) minutes pour laisser echapper tout le gaz. Renifler tout autour de l'appareil, y compris prØs du plancher, pour dØceler une odeur de gaz. Si c'est le cas, ARRÊTEZ. Passer à l'etape B des instructions de securite sur la portion superieure de cette etiquette. S'il n'y a pas d'odeur de gaz, passer à l'etâpe suivante.
7. Pousse le levier du contrôle du gaz à "ON/MARCHE" position.
8. Remettre en place le panneau d'accØs.
9. Mettre l'appareil sous tension.
10. RØgler le thermostat à la tempØrature dØsirØe.
11. Si l'appareil ne se met pas en marche, suivre les instructions intitulØes Comment couper l'admission de gaz de l'appareil et appeler un technicien qualifiØ ou le fournisseur de gaz.

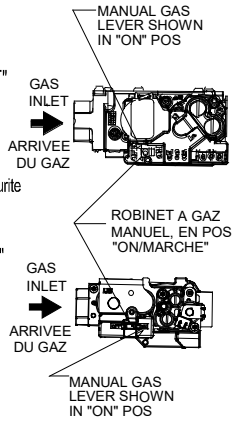

TO TURN OFF GAS TO APPLIANCE

1. Set the thermostat to lowest setting.
2. Turn off all electric power to the appliance if service is to be performed.
3. Push the gas control lever to "OFF" Position. Do not force.
4. Replace control access panel.

POUR COUPER L'ADMISSION DE GAZ DE L'APPAREIL

1. RØgler le thermostat à la tempØrature la plus bassØ
2. Couper l'alimentation Ølectrique de l'appareil s'il faut procØder à des operations d'entretien.
3. Pousse le levier du contrôle du gaz à "OFF/ ARRET" position. Ne pas forcer.
4. Remettre en place le panneau d'accØs.

0140F01904 - A

PRODUCT IDENTIFICATION

The model and manufacturing number are used for positive identification of component parts used in manufacturing. Please use these numbers when requesting service or parts information.

D	M	9	6	S	N	0	6	0	3	B	N	A	A
1	2	3	4	5	6	7	8	9	10	11	12	13	14

Brand
D - Daikin

Configuration
M - Upflow/Horizontal
C - Downflow/Horizontal

AFUE
80 - 80% AFUE 92 - 92% AFUE
96 - 96% AFUE 97 - 97% AFUE

Gas Valve
T - 2 Stage
S - 1 STAGE

MOTOR
N - Nine Speed ECM

MBTU/h
030 - 30,000 BTU/h 080 - 80,000 BTU/h
040 - 40,000 BTU/h 100 - 100,000 BTU/h
060 - 60,000 BTU/h 120 - 120,000 BTU/h

Minor Revision
A - Initial Release
B - 1st Revision

Major Revision
A - Initial Release
B - 1st Revision

Nox
N-Natural Gas =>40NG/JNOx
X-Low NOx <=40NG/JNOx
U-Ultra Low NOx =<14NG/JNOx

Cabinet Width
A - 14"
B - 17.5"
C - 21"
D - 24.5"

Maximum CFM
3 - 1200 CFM
4 - 1600 CFM
5 - 2000 CFM

INSTALLATION CONSIDERATIONS

Safety

Please adhere to the following warnings and cautions when installing, adjusting, altering, servicing, or operating the furnace.

WARNING

To prevent personal injury or death due to improper installation, adjustment, alteration, service, or maintenance, refer to this manual. For additional assistance or information, consult a qualified installer, servicer, agency or the gas supplier.

WARNING

To prevent possible property damage, personal injury or death due to electrical shock, the furnace must be located to protect the electrical components from water.

Charge (ESD) Precautions

NOTE: Discharge body's static electricity before touching unit. An electrostatic discharge can adversely affect electrical components.

Use the following precautions during furnace installation and servicing to protect the integrated control module from damage. By putting the furnace, the control, and the person at the same electrostatic potential, these steps will help avoid exposing the integrated control module to electrostatic discharge. This procedure is applicable to both installed and uninstalled (ungrounded) furnaces.

1. Disconnect all power to the furnace. Do not touch the integrated control module or any wire connected to the control prior to discharging your body's electrostatic charge to ground.
2. Firmly touch a clean, unpainted, metal surface of the furnace near the control. Any tools held in a person's hand during grounding will be discharged.
3. Service integrated control module or connecting wiring following the discharge process in Step 2. Use caution not to recharge your body with static electricity; (i.e., do not move or shuffle your feet, do not touch ungrounded objects, etc.). If you come in contact with an ungrounded object, repeat Step 2 before touching control or wires.
4. Discharge any static electricity from your body to ground before removing a new control from its container. Follow Steps 1 through 3 if installing the control on a furnace. Return any old or new controls to their containers before touching any ungrounded object.

WARNING

Possible property damage, personal injury or death due to fire, explosion, smoke, soot, condensation, electrical shock or carbon monoxide may result from improper installation, repair operation, or maintenance of this product.

WARNING

To prevent property damage, personal injury or death due to fire, do not install the furnace in a mobile home, trailer, or recreational vehicle.

To ensure proper furnace operation, install, operate, maintain and service the furnace in accordance with the installation, operation and service instructions, all local building codes and ordinances. In their absence, follow the latest edition of the National Fuel Gas Code (NFPA 54/ANSI Z223.1), and/or CAN/CGA B149 Installation Codes, local plumbing or waste water codes, and other applicable codes.

A copy of the National Fuel Gas Code (NFPA 54/ANSI Z223.1) can be obtained from any of the following:

American National Standards Institute
1430 Broadway
New York, NY 10018
National Fire Protection Association
1 Batterymarch Park
Quincy, MA 02269

CSA International
8501 East Pleasant Valley
Cleveland, OH 44131

A copy of the CAN/CGA B149 Installation Codes can be obtained from:

CSA International
178 Rexdale Boulevard
Etobicoke, Ontario, Canada M9W, 1R3

Thermostat Requirements

DM96SE and DC96SE model furnaces require a single stage heating thermostat for operation. It is recommended that a high quality thermostat with a "C" terminal is used to operate the furnace.

GAS SUPPLY AND PIPING

The furnace rating plate includes the approved furnace gas input rating and gas types. The furnace must be equipped to operate on the type of gas applied. This includes any conversion kits required for alternate fuels and/or high altitude.

CAUTION

To prevent unreliable operation or equipment damage, the inlet gas supply pressure must be as specified on the unit rating plate with all other household gas fired appliances operating.

Inlet gas supply pressures must be maintained within the ranges specified below. The supply pressure must be constant and available with all other household gas fired appliances operating. The minimum gas supply pressure must be maintained to prevent unreliable ignition. The maximum must not be exceeded to prevent unit overfiring.

DM92SN & DM96SN MINIMUM CLEARANCES TO COMBUSTIBLE MATERIALS

POSITION	SIDES	REAR	FRONT	BOTTOM	FLUE	TOP
Upflow	0"	0"	1"	C	0"	1"
Horizontal	6"	0"	1"	C	0"	4"

C = Combustible: if placed on combustible floor, the floor MUST be wood ONLY.
For servicing or cleaning, a 24: front clearance is recommended.
Unit connections (electrical, flue, and drain) may necessitate great clearances than the minimum clearances listed above.
In all cases, accessibility clearance must take precedence over from the enclosure where accessibility clearances are greater.
Approved for line contact in the horizontal position.

DC96SN MINIMUM CLEARANCES TO COMBUSTIBLE MATERIALS

POSITION	SIDES	REAR	FRONT	BOTTOM	FLUE	TOP
Downflow	0"	0"	1"	NC	0"	1"
Horizontal	6"	0"	1"	C	0"	4"

C = Combustible: if placed on combustible floor, the floor MUST be wood ONLY.
NC = Non-Combustible: A combustible floor sub-base must be used for installation on combustible flooring.
Notes:
For servicing or cleaning, a 24: front clearance is recommended.
Unit connections (electrical, flue, and drain) may necessitate great clearances than the minimum clearances listed above.
In all cases, accessibility clearance must take precedence over from the enclosure where accessibility clearances are greater.

Inlet gas supply pressures must be maintained within the ranges specified below. The supply pressure must be constant and available with all other household gas fired appliances operating. The minimum gas supply pressure must be maintained to prevent unreliable ignition. The maximum must not be exceeded to prevent unit overfiring.

INLET GAS SUPPLY PRESSURE		
Natural Gas	Minimum: 4.5" w.c.	Maximum: 10.0" w.c.
Propane Gas	Minimum: 11.0" w.c.	Maximum: 13.0" w.c.

Always use a backup wrench when working with piping connected to the gas valve to keep it from turning. The orientation of the gas valve on the manifold must be maintained as shipped from the factory.

Propane Gas Conversion

WARNING

Possible property damage, personal injury or death may occur if the correct conversion kits are not installed. The appropriate kits must be applied tot ensure safe and proper furnace operation. All conversions must be performed by a qualified installer or service agency.

The unit is configured for natural gas. The appropriate manufacturer's propane gas conversion kit must be applied for propane gas installations..

Gas Piping Checks

Before placing unit in operation or after servicing, leak test the unit and gas connections.

WARNING

To avoid possibility of explosion or fire, never use a match or open flame to test for leaks.

Check for leaks using an approved chloride-free soap and water solution, an electronic combustible gas detector, or other approved testing methods.

NOTE: Never exceed specified pressures for testing. Higher pressure may damage the gas valve and cause subsequent overfiring, resulting in heat exchanger failure. Disconnect this unit and shutoff valve from the gas supply piping system before pressure testing the supply piping system with pressures in excess of 1/2 psig (3.48 kPa). Isolate this unit from the gas supply piping system by closing its external manual gas shutoff valve before pressure testing supply piping system with test pressures equal to or less than 1/2 psig (3.48 kPa).

Propane Gas Tanks and Piping

WARNING

Propane gas is heavier than air and any leaking gas can settle in any low areas or confined spaces. To prevent property damage, personal injury, or death due to fire or explosion caused by a propane gas leak, install a gas detection warning device.

A gas detecting warning system is the only reliable way to detect a propane gas leak. Iron oxide (rust) can reduce the level of odorant in propane gas. Do not rely on your sense of smell. Contact a local propane gas supplier about installing a gas detecting warning system. If the presence of gas is suspected, please refer to the warning on this page.

All propane gas equipment must conform to the safety standards of the National Board of Fire Underwriters, NBFU Manual 58.

For satisfactory operation, propane gas pressure must be 10 inch WC at the furnace manifold with all gas appliances in operation.

WARNING

If the gas furnace is installed in a basement, an excavated area or a confined space, it is strongly recommended to contact a propane supplier to install a gas detecting warning device in case of a gas leak.

- **Since propane gas is heavier than air, any leaking gas can settle in any low area or confined spaces.**
- **Propane gas odorant may fade, making the gas undetectable except with warning device.**

WARNING

An undetected gas leak will create a danger of explosion or fire. If the presence of gas is suspected, follow the instructions on the cover of this manual. Failure to do so could result in SERIOUS PERSONAL INJURY OR DEATH.

WARNING

If the information in these instructions is not followed exactly, a fire or explosion may result causing property damage, personal injury or loss of life.

- do not store or use gasoline or other flammable vapors and liquids in the vicinity of this or any other appliance.

- WHAT TO DO IF YOU SMELL GAS:

- **Do not try to light any appliance.**
- **Do not touch any electrical switch; do not use any phone in your building.**
- **Immediately call your gas supplier from a neighbor's phone. Follow the gas supplier's instructions. If you cannot reach your gas supplier, call the fire department.**

- Installation and service must be performed by a qualified installer, service agency or the gas supplier.

ELECTRICAL CONNECTIONS

Wiring Harness

The wiring harness is an integral part of this furnace. Wires are color coded for identification purposes. Refer to the wiring diagram for wire routings. If any of the original wire as supplied with the furnace must be replaced, it must be replaced with wiring material having a temperature rating of at least 105° C. Any replacement wiring must be a copper conductor.

115 Volt Line Connections

Before proceeding with electrical connections, ensure that the supply voltage, frequency, and phase correspond to that specified on the unit rating plate. Power supply to the furnace must be NEC Class 1, and must comply with all applicable codes. The furnace must be electrically grounded in accordance with local codes or, in their absence, with the latest edition of The National Electric Code, ANSI NFPA 70 and/or The Canadian Electric Code CSA C22.1.

WARNING

HIGH VOLTAGE!
To avoid personal injury or death due to electrical shock, disconnect electrical power before servicing or changing any electrical wiring.

Humidifier	1.0 Amp maximum at 120 VAC
Electronic Air Cleaner	1.0 Amp maximum at 120 VAC

Use a separate fused branch electrical circuit containing properly sized wire, and fuse or circuit breaker. The fuse or circuit breaker must be sized in accordance with the maximum overcurrent protection specified on the unit rating plate. An electrical disconnect must be provided at the furnace location.

Connect hot, neutral, and ground wires as shown in the wiring diagram located on the unit's blower door. Metal conduit is not considered a substitute for an actual ground wire to the unit. For direct vent applications, the cabinet opening to the junction box must be sealed air tight using either an UL approved bushing such as Heyco Liquid Tight or by applying non-reactive UL approved sealant to bushing.

Line polarity must be observed when making field connections. Line voltage connections can be made through either the right or left side panel. The furnace is shipped configured for a left side (right side for counterflows) electrical connection with the junction box located inside the burner compartment. To make electrical connections through the opposite side of the furnace, the junction box must be relocated to the other side of the burner compartment prior to making electrical connections. To relocate the junction box, follow the steps shown in the Junction Box Relocation section.

WARNING

Edges of sheet metal holes may be sharp. Use gloves as a precaution when removing hole plugs.

WARNING

To prevent personal injury or death due to electrical shock, disconnect electrical power before installing or servicing this unit.

WARNING

HIGH VOLTAGE!
To avoid the risk of injury, electrical shock or death, the furnace must be electrically grounded in accordance with the local codes or in their absence, with the latest edition of the National Electrical Code.

WARNING

To avoid the risk of injury, electrical shock or death, the furnace must be electrically grounded in accordance with the local codes, or in their absence, with the latest edition of the National Electrical Code.

115 Volt Line Voltage Connection of Accessories (Humidifier and Electronic Air Cleaner)

The furnace integrated control module is equipped with line voltage accessory terminals for controlling power to an optional field-supplied humidifier and/or electronic air cleaner.

Turn OFF power to the furnace before installing any accessories. Follow the humidifier or air cleaner manufacturers' instructions for locating, mounting, grounding, and controlling these accessories. Accessory wiring connections are to be made through the 1/4" quick connect terminals provided on the furnace integrated control module. The humidifier hot terminal is identified as 120V HUM-H, its neutral terminal is identified as 120V HUM-N. The electronic air cleaner hot terminal is identified as EAC-H, its neutral terminal is identified as 120V EAC-N. All field wiring must conform to applicable codes. Connections should be made as shown. (See Figure 32)

If it is necessary for the installer to supply additional line voltage wiring to the inside of the furnace, the wiring must conform to all local codes, and have a minimum temperature rating of 105°C. All line voltage wire splices must be made inside the furnace junction box.

The integrated control module humidifier terminal 120V HUM-H is energized with 115 volts whenever the induced draft blower is energized. This terminal can also be used to provide 115 volt power to a humidifier transformer. The remaining primary transformer wire would be connected to the Line N on the control board. The integrated control module electronic air cleaner terminals EAC-H is energized with 115 volts whenever the circulator blower is energized.

NOTE: Wire routing must not to interfere with circulator blower operation, filter removal, or routine maintenance.

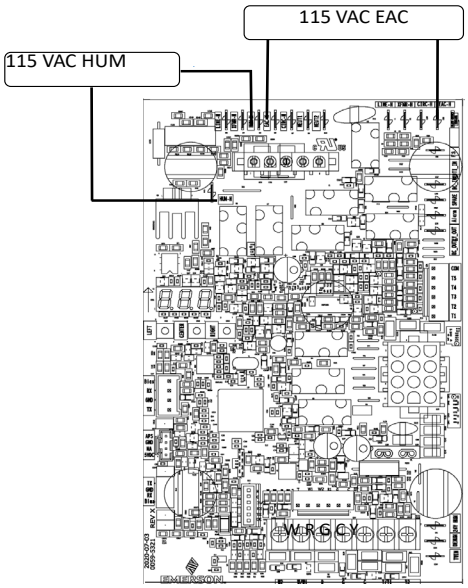

Figure 1

Connection of 24 Volt Humidifier

The integrated control module single humidifier terminal "24 V HUM" is energized with 24 volts whenever the induced draft blower is energized. Connect the common side of the 24 volt humidifier to the "C" terminal of the thermostat terminal strip on the control board.

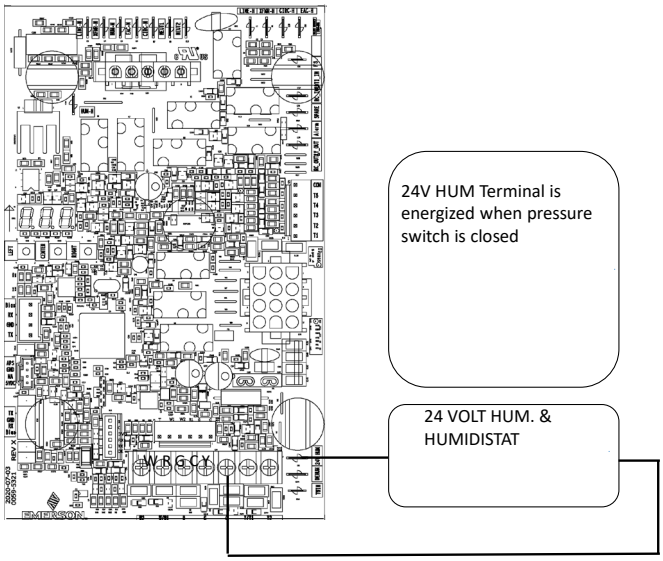

Figure 2

Junction Box Relocation

Line voltage connections can be made through either the right or left side panel. The furnace is shipped configured for a left side electrical connection. To make electrical connections through the opposite side of the furnace, the junction box must be relocated to the left side prior to making electrical connections. To relocate the junction box, perform the following steps.

1. Remove the burner compartment door.
2. Remove and save the two screws securing the junction box to the side panel.
3. Relocate junction box and associated plugs and grommets to opposite side panel. Secure with screws removed in step.

IMPORTANT NOTE: Wire routing must not interfere with circulator blower operation, filter removal or routine maintenance.

To ensure proper unit grounding, the ground wire should run from the furnace ground screw located inside the furnace junction box all the way back to the electrical panel.

NOTE: Do not use gas piping as an electrical ground. To confirm proper unit grounding, turn off the electrical power and perform the following check.

1. Measure resistance between the neutral (white) connection and one of the burners.
   Resistance should measure 10 ohms or less.

This furnace is equipped with a blower door interlock switch which interrupts unit voltage when the blower door is opened for servicing. Do not defeat this switch.

24 Volt Thermostat Wiring

Important Note: Wiring routing must not interfere with circulator blower operation, filter removal or routine maintenance.

Low voltage connections can be made through either the right or left side panel. Thermostat wiring entrance holes are located in the blower compartment. The following figure shows connections for a "heat/cool system".

This furnace is equipped with a 40 VA transformer to facilitate use with most cooling equipment. Consult the wiring diagram, located on the blower compartment door, for further details of 115 Volt and 24 Volt wiring.

Thermostat Wiring Diagrams

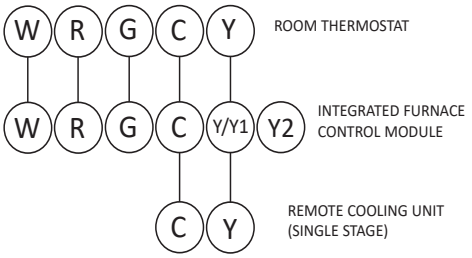

Thermostat - Single-Stage Heating with Single-Stage Cooling
Figure 3

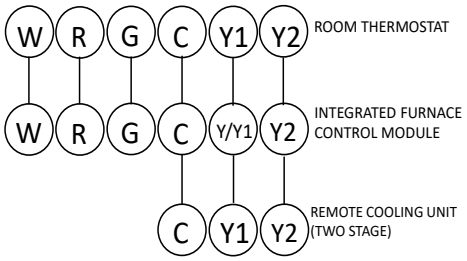

Thermostat - Single-Stage Heating with Two-Stage Cooling
Figure 4

WARNING

HIGH VOLTAGE!
To avoid personal injury or death due to electrical shock, disconnect electrical power before servicing or changing any electrical wiring.

Fossil Fuel Applications

This furnace can be used in conjunction with a heat pump in a fossil fuel application. A fossil fuel application refers to a combined gas furnace and heat pump installation which uses an outdoor temperature sensor to determine the most cost efficient means of heating (heat pump or gas furnace).

A heat pump thermostat is required to properly use a single-stage furnace in conjunction with a heat pump. Refer to the fossil fuel kit installation instructions for additional thermostat requirements.

Strictly follow the wiring guidelines in the fossil fuel kit installation instructions. All furnace connections must be made to the furnace two-stage integrated control module and the “FURNACE” terminal strip on the fossil fuel control board.

Twinning

Two furnaces of the same model may be twinned. The integrated control board has a 3⁄16” terminal labeled “TWIN” located beside the low voltage thermostat connection strip. Twinning allows simultaneous operation of two furnaces and forces the indoor blower motors of each furnace to operate synchronously into a common duct system. Using the twinning function will require only field installed wiring with no external kits or parts. The staging and speed tap options must be set the same on both furnaces.

NOTE: Each furnace must be connected to it’s own 115 VAC power supply. The L1 connection to each furnace must be in phase (connected to circuit breakers on the same 115 VAC service panel phase leg). To verify that the furnaces are in phase, check from L1 to L1 on each furnace with a voltmeter. If the furnaces are in phase, the voltage between both furnaces will be ZERO.

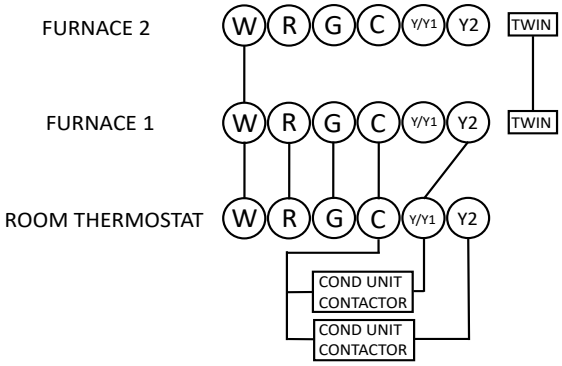

Figure 5

CAUTION

To prevent unreliable operation or equipment damage, the gas manifold pressure must be as specified on the unit rating plate. Only minor adjustments should be made by adjusting the gas valve pressure regulator.

WARNING

Possible property damage, personal injury or death may occur if the correct conversion kits are not installed. The appropriate kits must be applied to ensure safe and proper furnace operation. All conversions must be performed by a qualified installer or service agency.

GAS SUPPLY AND PIPING

INLET GAS SUPPLY PRESSURE		
Natural Gas	Minimum: 4.5" w.c.	Maximum: 10.0" w.c.
Propane Gas	Minimum: 11.0" w.c.	Maximum: 13.0" w.c.

The furnace rating plate includes the approved furnace gas input rating and gas types. The furnace must be equipped to operate on the type of gas applied. This includes any conversion kits required for alternate fuels and/or high altitude.

SYSTEM OPERATION

Inlet gas supply pressures must be maintained within the ranges specified in the following table. The supply pressure must be constant and available with all other household gas fired appliances operating. The minimum gas supply pressure must be maintained to prevent unreliable ignition. The maximum must not be exceeded to prevent unit overfiring.

WARNING

To avoid possible unsatisfactory operation of equipment damage due to underfiring or equipment, use the proper size of natural/propane gas piping needed when running pipe from the meter/tank furnace.

HIGH ALTITUDE INSTALLATION

When this furnace is installed at high altitude, the appropriate High Altitude Kit including orifices and a pressure switch(s) must be installed. These changes are necessary to compensate for the natural reduction in the density of both the gas fuel and the combustion air at higher altitude.

Installation of this furnace at altitudes above 7000 ft (2134 m), shall be made in accordance with the Listed High Altitude Conversion Kit available with this furnace.

Do not derate the furnace by adjusting the manifold pressure to a lower pressure than specified on the furnace rating plate. The combination of the lower air density and a lower manifold pressure will prohibit the burner orifice from drawing the proper amount of air into the burner. This may cause incomplete combustion, flashback, and yellow tipping.

In some areas the gas supplier may artificially derate the gas in an effort to compensate for the effects of altitude. If the gas is artificially derated, the appropriate orifice size must be determined based upon the BTU/ft³ content of the derated gas and the altitude. Refer to the National Fuel Gas Code, NFPA 54/ANSI Z223.1, and information provided by the gas supplier to determine the proper orifice size. A different pressure switch may be required at high altitude regardless of the BTU/ft³ content of the fuel used. Consult the furnace Specification Sheet. All conversions must be performed by a qualified installer, or service agency.

Propane Gas Conversion

This furnace is shipped from the factory configured for natural gas at standard altitude. To operate this furnace on L.P. gas, a LPM-07 LP Conversion kit must be used. Propane gas installations require an orifice and spring change to compensate for the energy content difference between natural and propane gas.

For furnaces being converted to LP gas, it is strongly recommended that a LPLP03 kit also be installed. The use of this kit will prevent the furnace from firing when the LP gas supply pressure is too low to support proper combustion.

All conversions must be performed by a qualified installer, or service agency.

Gas Valve

This unit is equipped with a 24 volt gas valve controlled during furnace operation by the integrated control module. As shipped, the valve is configured for natural gas. The valve is field convertible for use with propane gas by replacing the regulator spring with a propane gas spring from an appropriate manufacturer's propane gas conversion kit. Taps for measuring the gas supply pressure and manifold pressure are provided on the valve.

The gas valve has a manual ON/OFF control located on the valve itself. This control may be set only to the "ON" or "OFF" position. Refer to the lighting instructions label or Startup Procedure & Adjustment for use of this control during start up and shut down periods.

Gas Piping Connections

The gas piping supplying the furnace must be properly sized based on the gas flow required, specific gravity of the gas, and length of the run. The gas line installation must comply with local codes, or in their absence, with the latest edition of the National Fuel Gas Code, NFPA 54/ANSI Z223.1 or CAN/CSA B149.1-15 in Canada.

To connect the furnace to the building's gas piping, the installer must supply a ground joint union, drip leg, manual shutoff valve, and line and fittings to connect to gas valve. In some cases, the installer may also need to supply a transition piece from ½" pipe to a larger pipe size.
The following stipulations apply when connecting gas piping. Refer to *Gas Piping Connections* figure for typical gas line connections to the furnace.

- Gas piping must be supported external to the furnace cabinet so that the weight of the gas line does not distort the burner rack, manifold or gas valve.
- Use black iron or steel pipe and fittings for building piping. Where possible, use new pipe that is properly chamfered, reamed, and free of burrs and chips. If old pipe is used, be sure it is clean and free of rust, scale, burrs, chips, and old pipe joint compound.
- Use pipe joint compound on male threads ONLY. Always use pipe joint compound (pipe dope) that is APPROVED FOR ALL GASES. DO NOT apply compound to the first two threads.
- Use ground joint unions.
- Install a drip leg to trap dirt and moisture before it can enter the gas valve. The drip leg must be a minimum of three inches long.
- Install a ⅛" NPT pipe plug fitting, accessible for test gauge connection, immediately upstream of the gas supply connection to the furnace.

- Always use a back-up wrench when making the connection to the gas valve to keep it from turning. The orientation of the gas valve on the manifold must be maintained as shipped from the factory. Maximum torque for the gas valve connection is 375 in-lbs; excessive over-tightening may damage the gas valve.
- Install a manual shutoff valve between the gas meter and unit within six feet of the unit. If a union is installed, the union must be downstream of the manual shutoff valve, between the shutoff valve and the furnace.
- Tighten all joints securely.

Natural Gas Capacity of Pipe
In Cubic Feet of Gas Per Hour (CFH)

Length of Pipe in Feet	Nominal Black Pipe Size				
	1/2"	3/4"	1"	1 1/4"	1 1/2"
10	132	278	520	1050	1600
20	92	190	350	730	1100
30	73	152	285	590	980
40	63	130	245	500	760
50	56	115	215	440	670
60	50	105	195	400	610
70	46	96	180	370	560
80	43	90	170	350	530
90	40	84	160	320	490
100	38	79	150	305	460

(Pressure 0.5 psig or less and pressure drop of 0.3" W.C.; Based on 0.60 Specific Gravity Gas)

$$CFH = \frac{\text{BTUH Furnace Input}}{\text{Heating Value of Gas (BTU/Cubic Foot)}}$$

- Connection method must be in compliance with all local and national codes. US: National Fuel Gas Code (NFGC) NFPA 54-2012/ANSI Z223.1-2012 and the Installation Standards, Warm Air Heating and Air Conditioning Systems ANSI/NFPA 90B.
  In Canada, CANADA: National Standard of Canada, Natural Gas and Propane Installation Code (NSCNGPIC) CSA B149.1-15.
  Connect the furnace to the building piping by one of the following methods:
  - Rigid metallic pipe and fittings.
  - Semi-rigid metallic tubing and metallic fittings. Aluminum alloy tubing must not be used in exterior locations. In order to seal the grommet cabinet penetration, rigid pipe must be used to reach the outside of the cabinet. A semi-rigid connector to the gas piping may be used from there.
- Use listed gas appliance connectors in accordance with their instructions. Connectors must be fully in the same room as the furnace.
- Protect connectors and semi-rigid tubing against physical and thermal damage when installed. Ensure aluminum-alloy tubing and connectors are coated to protect against external corrosion when in contact with masonry, plaster, or insulation, or subjected to repeated wetting by liquids such as water (except rain water), detergents, or sewage.

The gas piping may enter the left or right side of the furnace cabinet. The installer must supply rigid pipe long enough to reach the outside of the cabinet to seal the grommet cabinet penetration. A semi-rigid connector to the gas piping can be used outside the cabinet per local codes. ½" NPT pipe and fittings are required. For models with an "L" shaped manifold, a 4 ½" long nipple is required. For models with a hook shaped manifold, a 2" long nipple is required.

A semi-rigid connector to the gas piping can be used outside the cabinet per local codes. From the elbow, the length of pipe and the fittings required will vary by the side chosen, location of union and cabinet width. The union may be placed inside or outside of the cabinet.

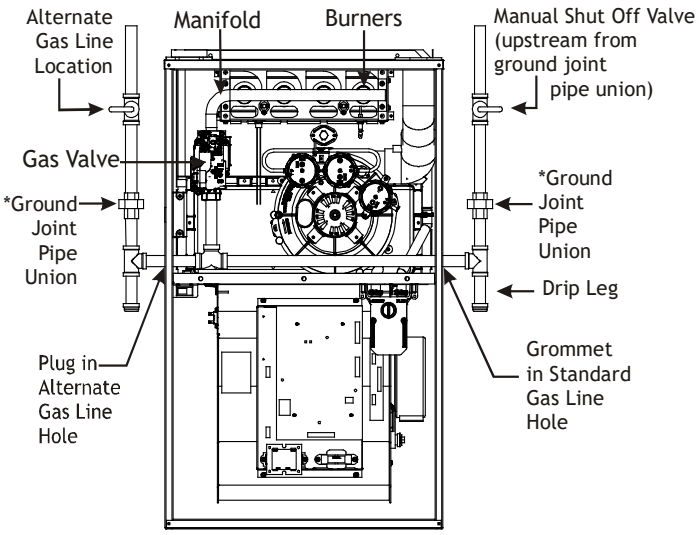

**NOTE: Union may be inside furnace cabinet where allowed by local codes.*

UPFLOW
FIGURE 6

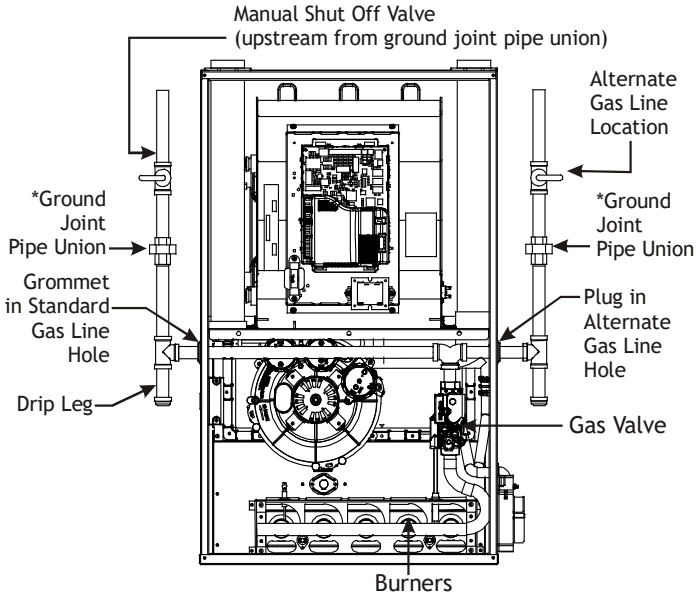

**NOTE: Union may be inside furnace cabinet where allowed by local codes.*

COUNTERFLOW
FIGURE 7

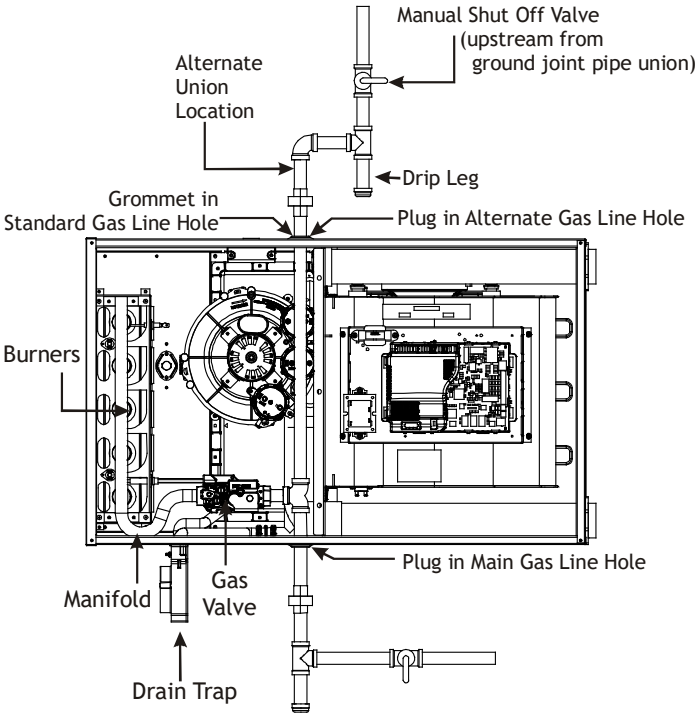

UPFLOW - HORIZONTAL LEFT
FIGURE 8

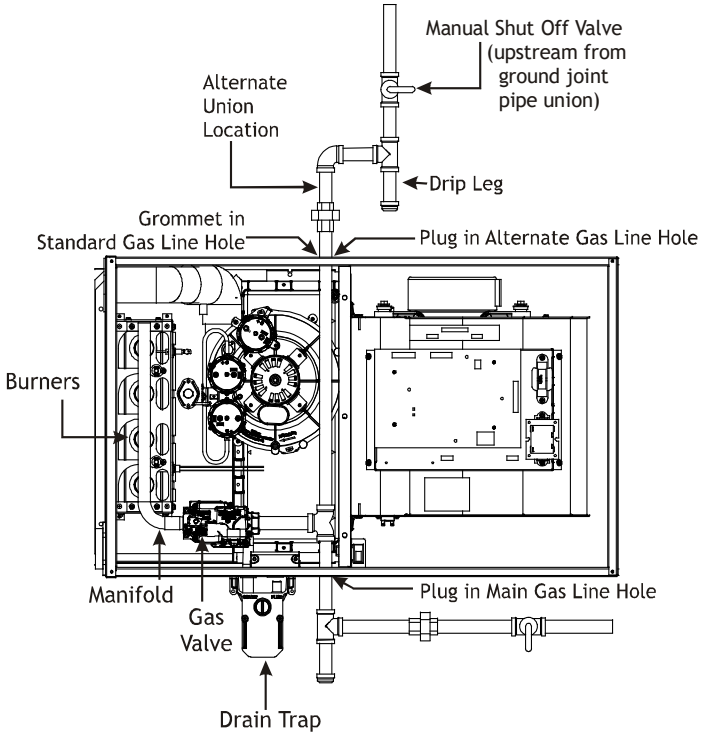

COUNTERFLOW - HORIZONTAL RIGHT
FIGURE 9

GAS PIPING CHECKS

Before placing unit in operation, leak test the unit and gas connections.

Check for leaks using an approved chloride-free soap and water solution, an electronic combustible gas detector, or other approved testing methods.
NOTE: Never exceed specified pressures for testing. Higher pressure may damage the gas valve and cause subsequent overfiring, resulting in heat exchanger failure.

Disconnect this unit and shutoff valve from the gas supply piping system before pressure testing the supply piping system with pressures in excess of ½ psig (3.48 kPa). Isolate this unit from the gas supply piping system by closing its external manual gas shutoff valve before pressure testing supply piping system with test pressures equal to or less than ½ psig (3.48 kPA).

WARNING

TO AVOID THE POSSIBILITY OF EXPLOSION OR FIRE, NEVER USE A MATCH OR OPEN FLAME TO TEST FOR LEAKS.

WARNING

IF THE GAS FURNACE IS INSTALLED IN A BASEMENT, AN EXCAVATED AREA OR CONFINED SPACE, IT IS STRONGLY RECOMMENDED TO CONTACT A PROPANE SUPPLIER TO INSTALL A GAS DETECTING WARNING DEVICE IN CASE OF A GAS LEAK.

- **SINCE PROPANE GAS IS HEAVIER THAN AIR, ANY LEAKING GAS CAN SETTLE IN ANY LOW AREAS OR CONFINED SPACES.**
- **PROPANE GAS ODORANT MAY FADE, MAKING THE GAS UNDETECTABLE EXCEPT WITH A WARNING DEVICE.**

PROPANE GAS TANKS AND PIPING

A gas detecting warning system is the only reliable way to detect a propane gas leak. Rust can reduce the level of odorant in propane gas. Do not rely on your sense of smell. Contact a local propane gas supplier about installing a gas detecting warning system. If the presence of gas is suspected, follow the instructions listed in the Safety Considerations section of this manual.

All propane gas equipment must conform to the safety standards of the National Board of Fire Underwriters, NBFU Manual 58.

CANADA: National Standard of Canada, Natural Gas and Propane Installation Code (NSCNGPIC) CSA B149.1-15.

SYSTEM OPERATION

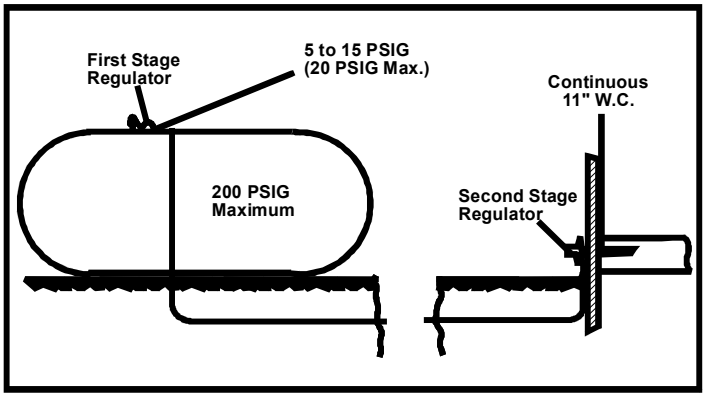

Propane Gas Installation (Typ.)
Figure 10

For satisfactory operation, propane gas pressure must be 10” WC at the furnace manifold with all gas appliances in operation. Maintaining proper gas pressure depends on three main factors:

1. Vaporization rate, depending on temperature of the liquid, and “wetted surface” area of the container or containers.
2. Proper pressure regulation. (Two-stage regulation is recommended for both cost and efficiency).
3. Pressure drop in lines between regulators, and between second stage regulator and the appliance. Pipe size will depend on length of pipe run and total load of all appliances.

Complete information regarding tank sizing for vaporization, recommended regulator settings, and pipe sizing is available from most regulator manufacturers and propane gas suppliers.

Since propane gas will quickly dissolve white lead and most standard commercial compounds, special pipe dope must be used. Always use a pipe thread sealant approved for all gases.

Refer to the illustration for typical propane gas installations and piping.

WARNING

Never allow the products of combustion, including carbon monoxide to enter the return duct work or circulation air supply.

CIRCULATING AIR & FILTERS

Duct work - Air Flow

Duct systems and register sizes must be properly designed for the CFM and external static pressure rating of the furnace. Design the ductwork in accordance with the recommended methods of “Air Conditioning Contractors of America” Manual D.

Install the duct system in accordance with Standards of the National Board of Fire Underwriters for the Installation of Air Conditioning, Warm Air Heating and Ventilating Systems. Pamphlets No. 90A and 90B.

A closed return duct system must be used, with the return duct connected to the furnace. **NOTE:** Ductwork must never be attached to the back of the furnace. For upflow installations requiring 1800 CFM or more, use either two side returns or bottom return or a combination of side / bottom. Flexible joints may be used for supply and return connections to reduce noise transmission. To prevent the blower from interfering with combustion air or draft when a central return is used, a connecting duct must be installed between the unit and the utility room wall. Never use a room, closet, or alcove as a return air chamber.

Checking Duct Static

Refer to your furnace rating plate for the maximum ESP (external duct static) rating.

Total external static refers to everything external to the furnace cabinet. Cooling coils, filters, ducts, grilles, registers must all be considered when reading your total external static pressure. The supply duct pressure must be read between the furnace and the cooling coil. This reading is usually taken by removing the “A” shaped block off plate from the end on the coil; drilling a test hole in it and reinstalling the block off plate. Take a duct static reading at the test hole. Tape up the test hole after your test is complete. The negative pressure must be read between the filter and the furnace blower.

Too much external static pressure will result in insufficient air that can cause excessive temperature rise. This can cause limit switch tripping and heat exchanger failure.

To determine total external duct static pressure, proceed as follows:

1. With clean filters in the furnace, use a manometer to measure the static pressure of the return duct at the inlet of the furnace. (Negative Pressure)
2. Measure the static pressure of the supply duct. (Positive Pressure)
3. The difference between the two numbers is .4” w.c.

Example:

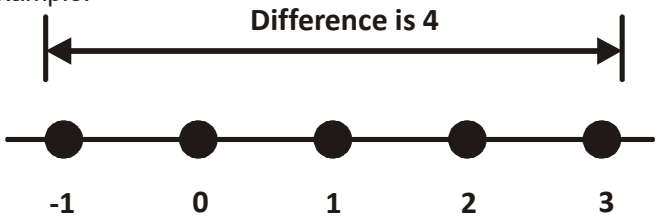

Static reading from return duct = -.1” w.c.
Static reading from supply duct = .3” w.c.
Total external static pressure on this system = .4” w.c.

SYSTEM OPERATION

NOTE: Both readings may be taken simultaneously and read directly on the manometer if so desired. If an air conditioner coil or Electronic Air Cleaner is used in conjunction with the furnace, the readings must also include theses components, as shown in the following drawing.

4. Consult proper tables for the quantity of air.

If the total external static pressure exceeds the maximum listed on the furnace rating plate, check for closed dampers, registers, undersized and/or oversized poorly laid out duct work.

The temperature rise of the furnace must be within the temperature rise range listed on the furnace rating plate.

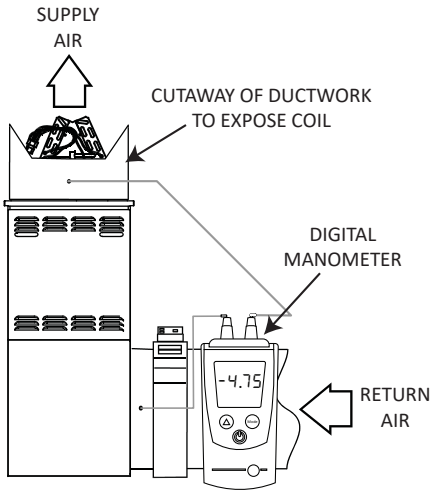

Checking Static Pressure (80% Furnace Shown, 90% Similar) Figure 11

WARNING

Edges of sheet metal may be sharp. Use gloves as a precaution when removing sheet metal from return air openings.

Bottom Return Air Opening [Upflow Models]

The bottom return air opening on upflow models utilizes a “lance and cut” method to remove sheet metal from the duct opening in the base pan. To remove, simply press out the lanced sections by hand to expose the metal strips retaining the sheet metal over the duct opening. Using tin snips, cut the metal strips and remove the sheet metal covering the duct opening. In the corners of the opening, cut the sheet metal along the scribe lines to free the duct flanges. Using the scribe line along the duct flange as a guide, unfold the duct flanges around the perimeter of the opening using a pair of seamer pliers or seamer tongs.

NOTE: Airflow area will be reduced by approximately 18% if duct flanges are not unfolded. This could cause performance issues and noise issues.

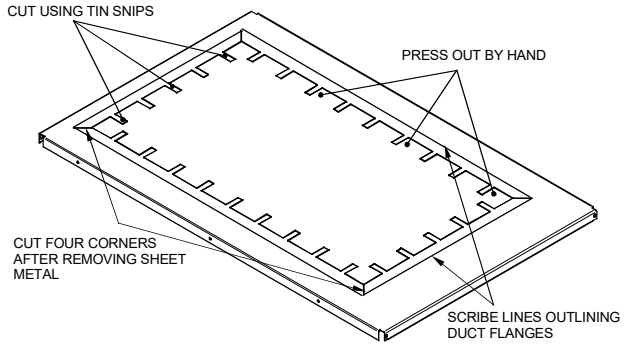

Duct Flange Cut Outs Figure 12

When the furnace is used in connection with a cooling unit, the furnace should be installed in parallel with or on the upstream side of the cooling unit to avoid condensation in the heating element. With a parallel flow arrangement, the dampers or other means used to control the flow of air must be adequate to prevent chilled air from entering the furnace and, if manually operated, must be equipped with means to prevent operation of either unit unless the damper is in the full heat or cool position.

When the furnace is installed without a cooling coil, it is recommended that a removable access panel be provided in the outlet air duct. This opening shall be accessible when the furnace is installed and shall be of such a size that the heat exchanger can be viewed for visual light inspection or such that a sampling probe can be inserted into the air stream. The access panel must be made to prevent air leaks when the furnace is in operation.

When the furnace is heating, the temperature of the return air entering the furnace must be between 55°F and 100°F.

FILTERS - READ THIS SECTION BEFORE INSTALLING THE RETURN AIR DUCT WORK

Filters must be used with this furnace. Discuss filter maintenance with the building owner. Filters do not ship with this furnace, but must be provided, sized and installed externally by the installer. Filters must comply with UL900 or CAN/ULCS111 standards. Damage or repairs due to the installation of the furnace without filters is not covered under the warranty.

On upflow units, guide dimples locate the side return cutout locations. Use a straight edge to scribe lines connecting the dimples. Cut out the opening on these lines.

NOTE: An undersized opening will cause reduced airflow.

Refer to the Filter Sizing Chart to determine filter area requirements.

SYSTEM OPERATION

Filter Sizing Charts

Filter Sizing Chart	
Model	**Minimum Recommended Filter Size**
DM92SN0403AN	1 - 16 X 25 Side or 1 - 14 X 24 Bottom Return
DM92SN0603BN	1 - 16 X 25 Side or Bottom Return
DM92SN0803BN	1 - 16 X 25 Side or Bottom Return
DM92SN0804CN	1 - 16 X 25 Side or Bottom Return
DM92SN0805CN	2 - 16 X 25 Side or 1 - 20 X 25 Bottom Return
DM92SN1004CN	1 - 16 X 25 Side or Bottom Return
DM92SN1005CN	2 - 16 X 25 Side or 1 - 20 X 25 Bottom Return[1]
DM92SN1205DN	2 - 16 X 25 Side or 1 - 24 X 24 Bottom Return[1]

Larger filters may be used, filters may also be centrally located.
[1] = use 2 - 16 X 25 filters and two side returns or 20 X 25 filter on bottom return or combination side & bottom if furnace is connected to a cooling unit over 4 tons nominal capacity

Filter Sizing Chart	
Model	**Minimum Recommended Filter Size**
DM96SN0403AN	1 - 16 X 25 Side or 1 - 14 X 24 Bottom Return
DM96SN0603BN	1 - 16 X 25 Side or Bottom Return
DM96SN0803BN	1 - 16 X 25 Side or Bottom Return
DM96SN0804CN	1 - 16 X 25 Side or Bottom Return
DM96SN0805CN	2 - 16 X 25 Side or 1 - 20 X 25 Bottom Return
DM96SN1005CN	2 - 16 X 25 Side or 1 - 20 X 25 Bottom Return[1]
DM96SN1205DN	2 - 16 X 25 Side or 1 - 24 X 24 Bottom Return[1]
DC96SN0403BN	2 - 10 X 20 or 1 - 14 X 25 Top Return
DC96SN0603BN	2 - 10 X 20 or 1 - 14 X 25 Top Return
DC96SN0804CN	2 - 14 X 20 or 1 - 16 X 25 Top Return
DC96SN1005CN	2 - 14 X 20 or 1 - 20 X 25 Top Return
DC96SN1205DN	2 - 14 X 20 or 1 - 24 X 24 Top Return

Larger filters may be used, filters may also be centrally located.
[1] = use 2 - 16 X 25 filters and two side returns or 20 X 25 filter on bottom return or combination side & bottom if furnace is connected to a cooling unit over 4 tons nominal capacity

Change filters before occupants take ownership of a new home!

Consider installing an air cleaner with deep-pleated media filter at the time of furnace installation. A deep-pleated filter with a MERV rating of 8 (minimum) will often provide better filtration to protect equipment and the air distribution system than a standard 1" filter and often has lower static pressure loss than a 1" filter. Also a deep-pleated filter will typically require less frequent replacement intervals. Avoid using highly restrictive 1" filters which produce static pressure loss greater than .25" W.C. In some installations the minimum filter size required (consult filter sizing chart above) will not lend itself to a filter installation on the side of the furnace. The installation of a centrally installed air cleaner cabinet or a return duct filter installation may offer more practicality.

Clean Comfort™ brand MERV 11 air cleaners have 5¼" media filters and are available in the following configurations. Consult your distributor for information on our complete line of IAQ Clean Comfort™ products.

Depending on the installation and/or customer preference, differing filter arrangements can be applied. Filters can be installed in the central return register or a side panel external filter rack kit (upflows). As an alternative a media air filter or electronic air cleaner can be used as the requested filter.

The following figures show possible filter locations:

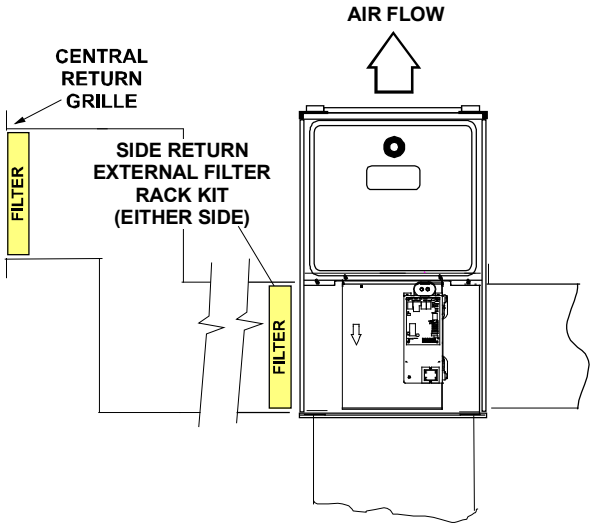

Possible Upright Upflow
Figure 13

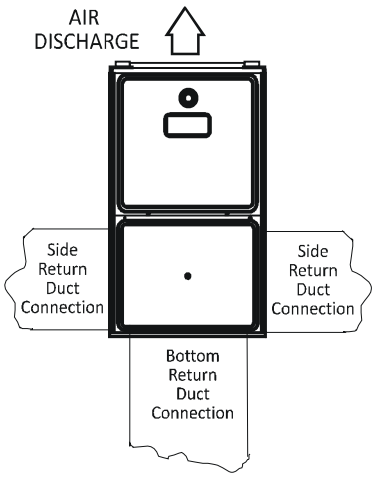

UPFLOW UPRIGHT

Figure 14

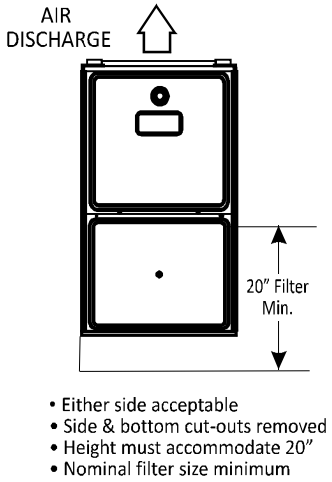

SIDE/BOTTOM RETURN DUCT OPTION

FIGURE 15

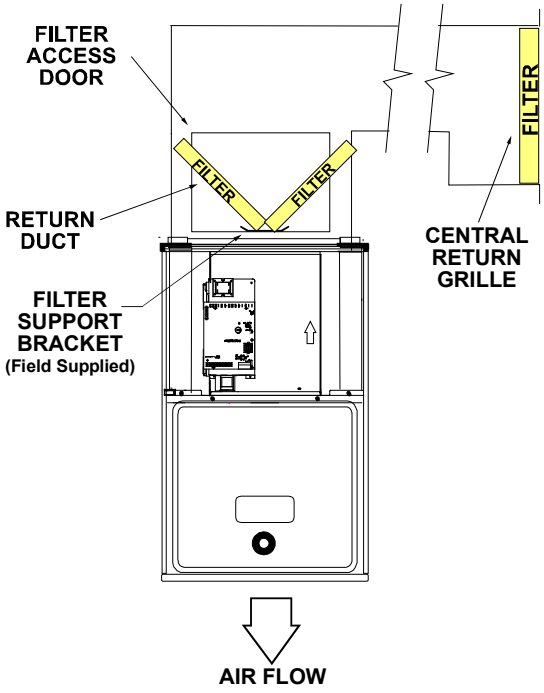

POSSIBLE UPRIGHT COUNTERFLOW FILTER LOCATIONS

FIGURE 16

HORIZONTAL INSTALLATIONS

Filters must be installed in either the central return register or in the return air duct work.

STARTUP PROCEDURE & ADJUSTMENT

Furnace must have a 115 VAC power supply properly connected and grounded. Proper polarity must be maintained for correct operation. In addition to the following start-up and adjustment items, refer to further information in Operational Checks section.

FURNACE CABINET

Check that all furnace cabinet sealing components are in place (plugs, grommets, gaskets). **NOTE:** If the furnace bottom panel has not been removed for a return duct connection, all perforations must be sealed with duct sealant compound or other suitable method to prevent air leakage. For optimal performance verify that all do gaskets are properly in place and replace as needed to prevent air leakage.

DRAIN TRAP PRIMING

The drain trap must be primed prior to furnace startup. To prime, fill both sides of the drain trap with water. This ensures proper furnace drainage upon startup and prohibits the possibility of flue gases escaping through the drain system.

FURNACE OPERATION

Purge gas lines of air prior to startup. Be sure not purge lines into an enclosed burner compartment. Follow NFPA 54, National Fuel Gas Code 8.1 for proper purging methods. In Canada, follow approved purging methods in B149.1-15.

Check for leaks using an approved chloride-free soap and water solution, an electronic combustible gas detector, or other approved method. Verify that all required kits (propane gas, high altitude, etc.) have been appropriately installed.

FURNACE STARTUP

1. Close the manual gas shutoff valve external to the furnace.
2. Turn off the electrical power to the furnace.
3. Set the room thermostat to the lowest possible setting.
4. Remove the burner compartment door.

NOTE: This furnace is equipped with an ignition device which automatically lights the burner. Do not try to light the burner by hand.

5. Move the furnace gas valve manual control to the OFF position.
6. Wait five minutes then smell for gas. Be sure check near the floor as some types of gas are heavier than air.

7. If you smell gas after five minutes, immediately follow the safety instructions in the *Safety Considerations* on page 2 of this manual. If you do not smell gas after five minutes, move the furnace gas valve manual control to the ON position.
8. Replace the burner compartment door.
9. Open the manual gas shutoff valve external to the furnace.
10. Turn on the electrical power to the furnace.
11. Adjust the thermostat to a setting above room temperature.
12. After the burners are lit, set the thermostat to desired temperature.

Gas Heat Sequence of Operation

Call for Heat

- On a call for heat, the thermostat contacts close & the control board receives 24 VAC on the W terminal.
- The control board microcomputer runs its self-check routine.
- The control verifies the limit switch is closed (24 VAC on Pin 8 of the 12 Pin connector).
- The control verifies that pressure switch circuit is open (0 VAC on Pin 5).
- The control module performs a gas valve circuitry check to verify gas valve relay state and presence of voltage at the valve.
- The system will energize the Induced draft blower.
- The pre-purge period begins once the pressure switch is detected closed (24 VAC on Pin 5).
- After the completion of pre-purge, the control will energize the igniter.
- After completion of the ignitor warm-up period:
- The gas valve is energized.
- The ignitor is de-energized as soon as flame is sensed.
- After 30 seconds the indoor blower is energized on heating speed.
- When the thermostat is satisfied:
- The gas valve is de-energized.
- The inducer remains energized for the post purge period (15 seconds).
- The indoor blower runs for the selected off delay period (90 seconds by default, adjustable from 30 – 180 seconds).

Heating Mode Speed Selection

To change the main blower speed in HEATING mode, follow the following steps:

1. Press left or right button till LED displays “gA1 “(for single stage HEATING). Press center button and LED will display the selected speed number as Fxx (xx: Blower speed number).
2. The control shall rotate available speed number every time Left/Right switches are pressed. Table below shows the available speeds for Low & High heat mode.
3. When the center switch is pressed, the current displayed speed shall be selected, and control shall apply the newly selected speed in next heating call.

NOTE: Always refer to the Heating Chart to choose from available heating speeds

THERMOSTAT CALL	AVAILABLE SPEEDS
W/W1	F01
	F02 (DEFAULT)
	F03
	F04

Heating Speed Table for 1 Stage IFC

Continuous Fan Mode Speed Selection

To change the main blower speed in circulation mode, follow the following steps:

1. Press the left or right switch until LED displays “FSd”. Press the center switch and LED will display the selected speed number as Fxx (xx: Blower speed number from 1 to 9). F01 is the default speed for circulation.
2. The control will rotate available speed number every time left/right switches are pressed. All 9 speeds are available for circulation.
3. When the center switch is pressed, the current displayed speed will be selected, and control will immediately apply that speed setting.

THERMOSTAT CALL	AVAILABLE SPEEDS
G	F01 (DEFAULT)
	F02
	F03
	F04
	F05
	F06
	F07
	F08
	F09

Circulation Speed Table

SYSTEM OPERATION

Cooling Mode Sequence of Operation

Low Stage Cooling Mode Sequence:

On a call for low stage cooling, the Y/Y1 or Y/Y1 and G thermostat contacts close signaling the furnace control board with 24 VAC on Y/Y1 or Y/Y1 and G terminals.

- The 7-Segment will display the cool mode: 1 A C
- The compressor and condenser fan are energized.
- The circulator fan is energized at low cool speed after a cool on delay. The electronic air cleaner will also be energized.
- After the thermostat is satisfied, the compressor is de-energized and the Cool Mode Fan Off Delay period begins.
- Following the Cool Mode Fan Off Delay period, the cool circulator and air cleaner relay are de-energized.

2nd Stage Cooling Mode Sequence:

On a call for 2nd stage cooling, the Y2 or Y2 and G thermostat contacts close signaling the furnace control board with 24 VAC on Y2 or Y2 and G terminals.

- The 7-Segment will display the cool mode: 2 A C
- The compressor and condenser fan are energized.
- The circulator fan is energized at cool speed after a cool on delay. The electronic air cleaner will also be energized.
- After the thermostat is satisfied, the compressor is de-energized and the Cool Mode Fan Off Delay period begins.
- Following the Cool Mode Fan Off Delay period, the cool circulator and air cleaner relay are de-energized

Cooling Mode Speed Selection

To change the main blower speed in COOLING mode, follow the following steps:

1. Press the left or right switch until LED displays “AC1 “(for single stage COOLING) or “AC2 “(for two-stage COOLING). Press the center switch and LED will display the selected speed number as Fxx (xx: Blower speed number from 1 to 9).
2. The control will rotate available speed number every time left/right switches are pressed. All 9 speeds are available for both Single and Two Stage cooling.
3. When the center switch is pressed, the current displayed speed will be selected, and control will apply the newly selected speed in next cooling call.

THERMOSTAT CALL	AVAILABLE SPEEDS
Y/Y1	F01
	F02
	F03
	F04 (DEFAULT)
	F05
	F06
	F07
	F08
	F09

Single-Stage Cooling Speed Table for 2 Stage IFC

THERMOSTAT CALL	AVAILABLE SPEEDS
Y2	F01
	F02
	F03
	F04
	F05 (DEFAULT)
	F06
	F07
	F08
	F09

Two-Stage Cooling Speed Table for 2 Stage IFC

Furnace Shutdown

1. Set the thermostat to the lowest setting. The integrated control will close the gas valve and extinguish flame. Following a 15 second delay, the induced draft blower will be de-energized. After the blower off delay time expires, the blower de-energizes.
2. Remove the burner compartment door and move the furnace gas valve manual control to the OFF position.
3. Close the manual gas shutoff valve external to the furnace.
4. Replace the burner compartment door.

EXTERNAL FILTER RACK KIT (EFR02)

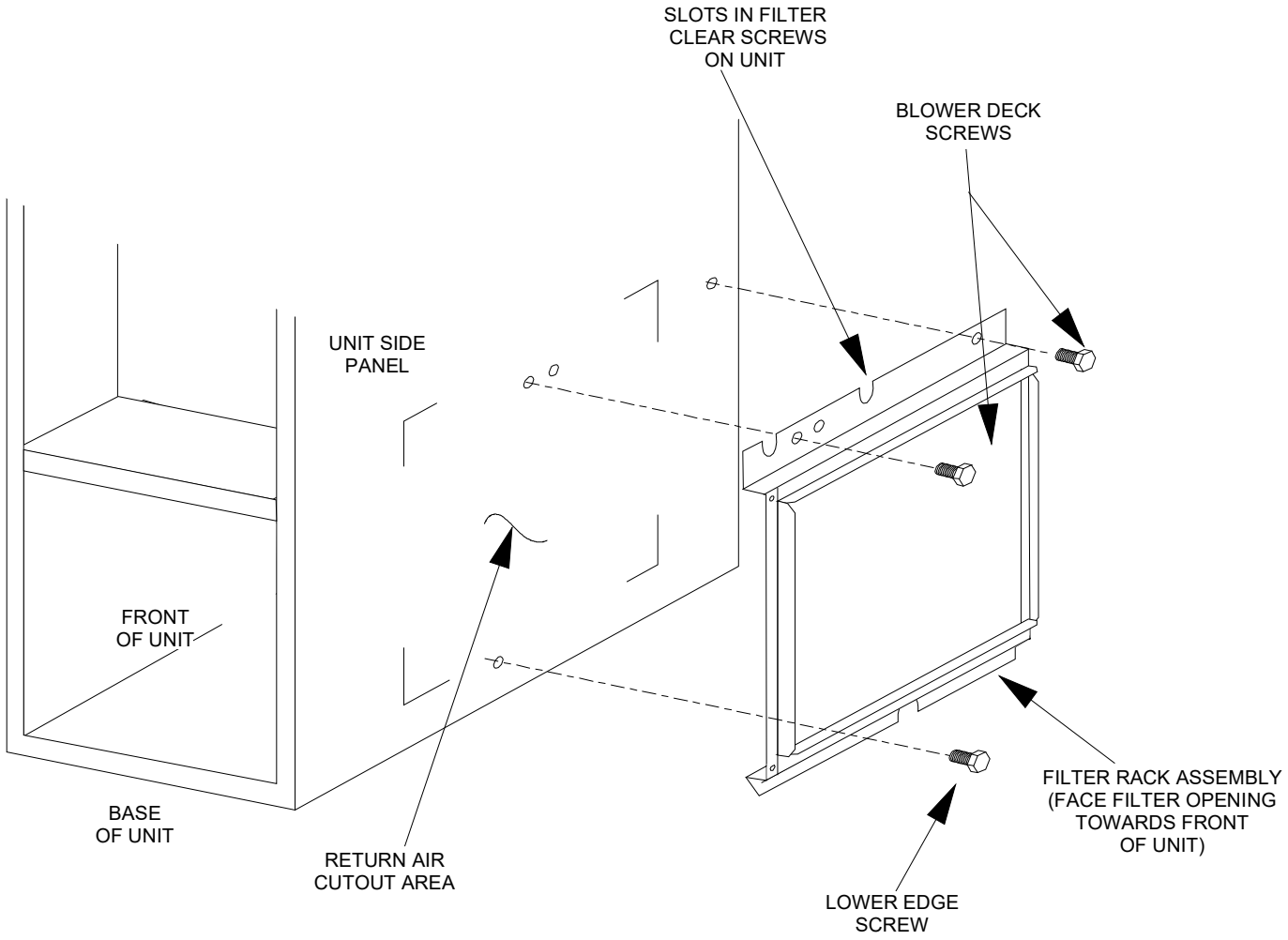

EFR02 EXTERNAL FILTER RACK KIT
90% Upflow Model Furnaces

CONCENTRIC VENT CONVERSION KIT
(DCVK-20 / CVENT-2) (DCVK-30 / CVENT-3)

The DCVK-20 (2") or the DCVK-30 (3") is a concentric vent kit approved with furnaces listed in this manual.
This concentric vent kit allows for vertical or horizontal vent termination. The illustrations give a brief view of the kit and its application.

See the section in this manual under "Vent Flue and Combustion Air Pipe Terminations" for more information or consult the Installation and Operating Instructions (IO-619*).

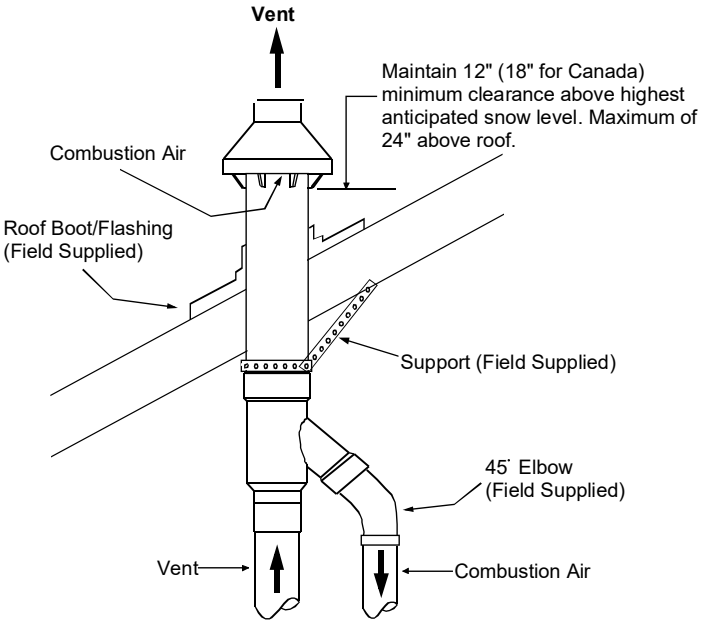

DCVK (Vertical Installation)

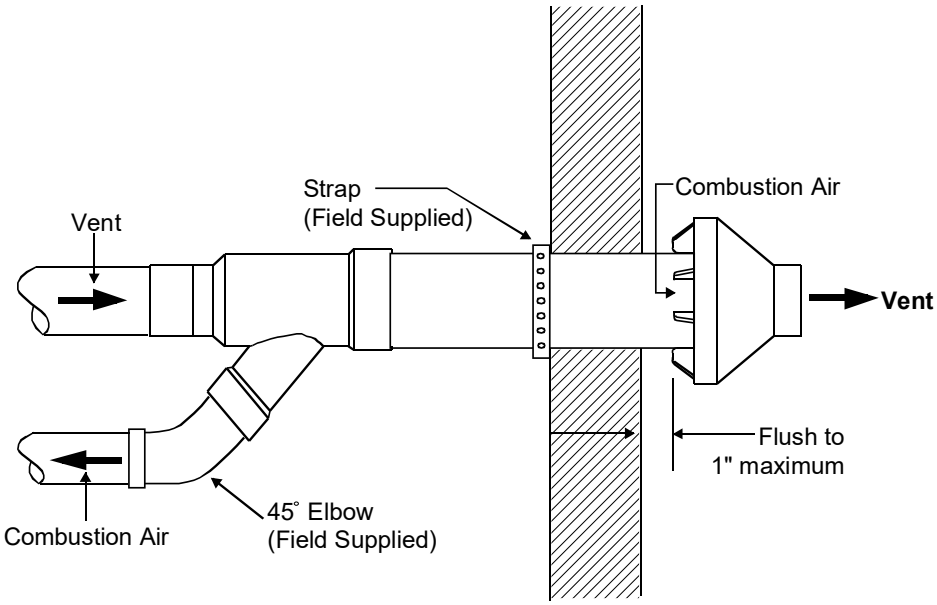

DCVK(Horizontal Installation)

SIDE WALL VENT KIT
(0170K00000S / 0170K00001S)

Description

These side wall only vent kits are to be used with 2” - 3” vent systems. These kits are NOT intended for use with single pipe (indirect vent) installations.

These vent kits must terminate outside the structure and may be installed with the intake and exhaust pipes located side-by-side or with one pipe above the other.

See the section in this manual under "Vent Flue and Combustion Air Pipe Terminations" for more information or consult the Installation Instructions (IO-635* or IO-805).

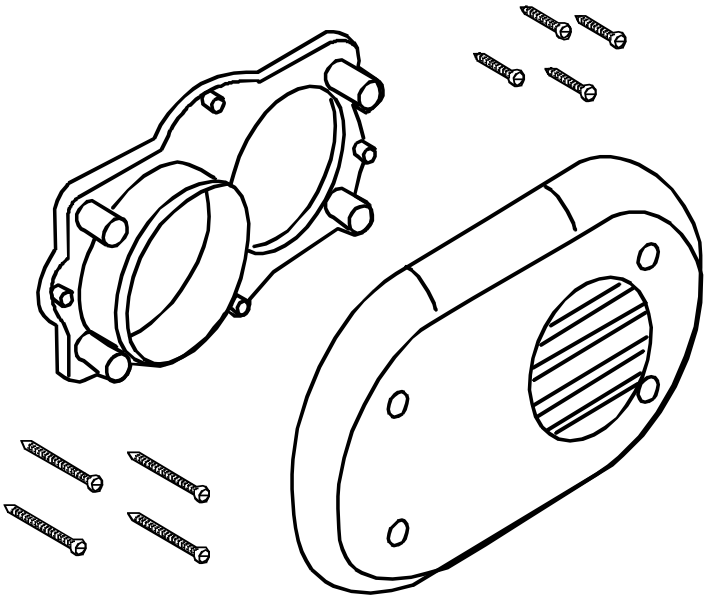

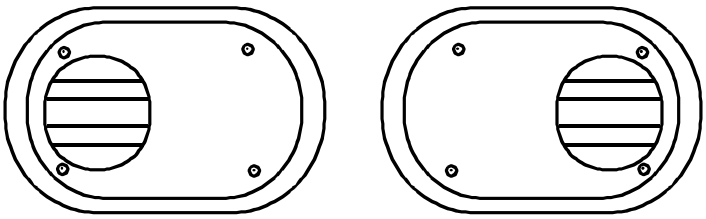

Horizontal Installation

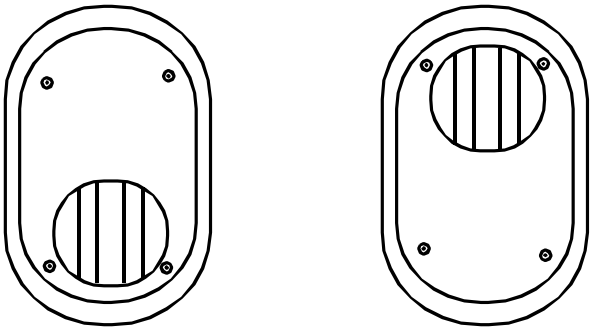

Vertical Installation

SERVICING

As more and more electronic's are introduced to the Heating Trade, Polarization of incoming power and phasing of primary to secondary voltage on transformers becomes more important.

Polarization has been apparent in the Appliance industry since the introduction of the three prong plug, however, the Heating Industry does not use a plug for incoming power, but is hard wired.

Some of the electronic boards being used today, with flame rectification, will not function properly and/or at all without polarization of incoming power. Some also require phasing between the primary and secondary sides of step-down transformers.

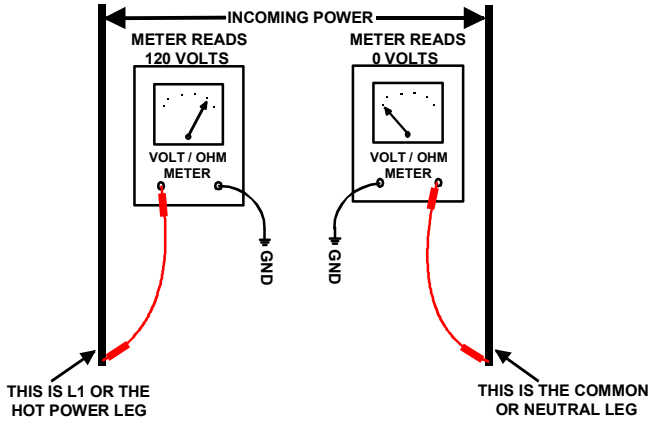

These then should be wired to the furnace accordingly.

Checking for Phasing - Primary to Secondary of Unmarked Transformers*

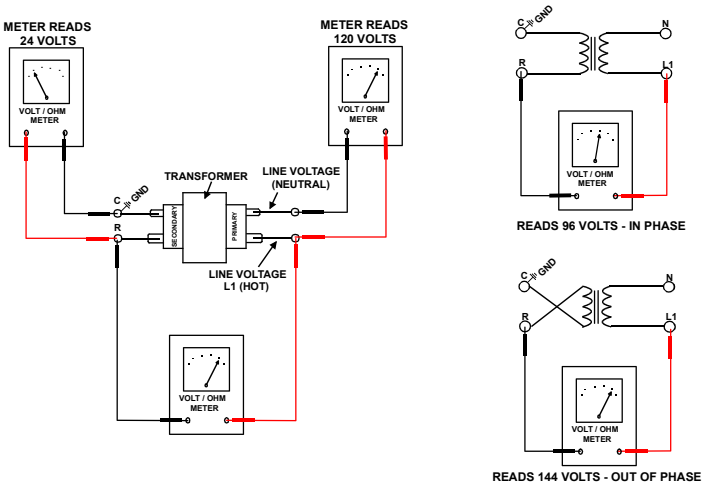

If meter reads approximately 96 volts - the primary to secondary are in phase - if reads approximately 144 volts out of phase - reverse low voltage wires.

***NOTE: For flame rectification the common side of the secondary voltage (24 V) is cabinet grounded. If you were to bench test a transformer the primary neutral and secondary common must be connected together for testing purposes.**

Some transformers will display phasing symbols as shown in the illustration to the left to assist in determining proper transformer phasing.

Checking for polarization and phasing should become a habit in servicing. Let's start now.

NOTE: Newer integrated ignition controls have a diagnostic flash code for reversed polarity (Refer to Troubleshooting-Diagnostic Chart for LED Codes).

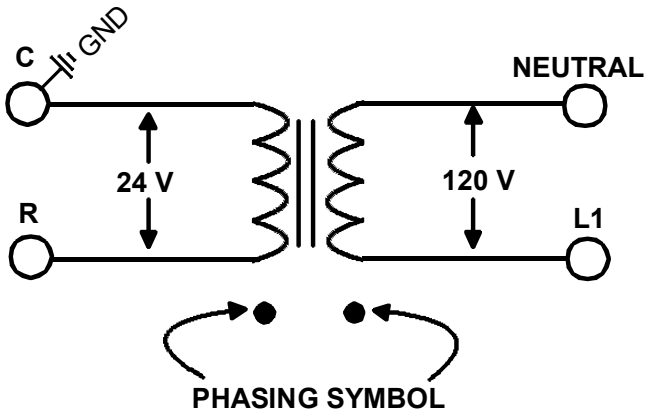

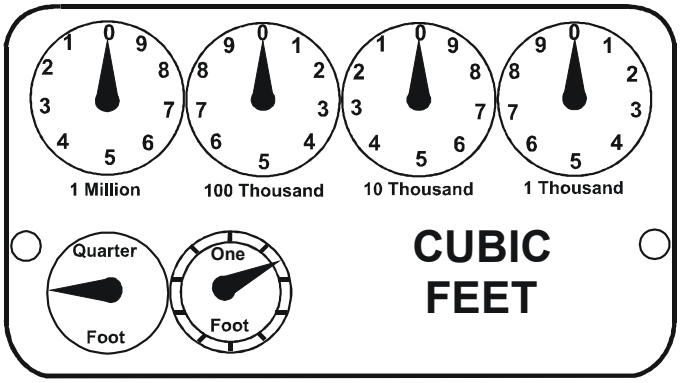

GAS RATE -- CUBIC FEET PER HOUR					
Seconds for One Revolution	Size of Test Dial				
	1/4 cu/ft	1/2 cu/ft	1 cu/ft	2 cu/ft	5 cu/ft
10	90	180	360	720	1800
11	82	164	327	655	1636
12	75	150	300	600	1500
13	69	138	277	555	1385
14	64	129	257	514	1286
15	60	120	240	480	1200
16	56	113	225	450	1125
17	53	106	212	424	1059
18	50	100	200	400	1000
19	47	95	189	379	947
20	45	90	180	360	900
21	43	86	171	343	857
22	41	82	164	327	818
23	39	78	157	313	783
24	37	75	150	300	750
25	36	72	144	288	720
26	34	69	138	277	692
27	33	67	133	265	667
28	32	64	129	257	643
29	31	62	124	248	621
30	30	60	120	240	600
31	--	--	116	232	581
32	28	56	113	225	563
33	--	--	109	218	545
34	26	53	106	212	529
35	--	--	103	206	514

GAS RATE -- CUBIC FEET PER HOUR					
Seconds for One Revolution	Size of Test Dial				
	1/4 cu/ft	1/2 cu/ft	1 cu/ft	2 cu/ft	5 cu/ft
36	25	50	100	200	500
37	--	--	97	195	486
38	23	47	95	189	474
39	--	--	92	185	462
40	22	45	90	180	450
41	--	--	--	176	439
42	21	43	86	172	429
43	--	--	--	167	419
44	--	41	82	164	409
45	20	40	80	160	400
46	--	--	78	157	391
47	19	38	76	153	383
48	--	--	75	150	375
49	--	--	--	147	367
50	18	36	72	144	360
51	--	--	--	141	355
52	--	--	69	138	346
53	17	34	--	136	340
54	--	--	67	133	333
55	--	--	--	131	327
56	16	32	64	129	321
57	--	--	--	126	316
58	--	31	62	124	310
59	--	--	--	122	305
60	15	30	60	120	300

Combustion Quality

Combustion quality can be affected by several factors. Major factors are venting and draining.

Venting

The venting system should be planned and installed with the following in mind:

- Should not be longer than necessary
- Use 45° elbows rather than 90° elbows when possible
- Must not sag or otherwise trap condensate
- Use longest radius fittings possible
- If using 3" venting, make the transition from 2" to 3" as close as practically possible
- Make sure there is no flue gas recirculation into the combustion air pipe

Condensate Drainage

Furnace combustion can be affected if a furnace is holding condensate. Check for proper connections of drain hoses; make sure furnace condensate trap is clean. Make sure furnace is not improperly sloped. Make sure air conditioning coil drain is not interfering with furnace drain.

Other Causes

1. Manifold Gas Pressure must be set, the gas being used, Natural or L.P., high and low firing rates. If converted to L.P. gas, check size of all orifices.
2. Remove Draft Inducer, Check the integrity of the gasket between the inducer and the collector box cover, any air leak here will have a negative effect on combustion. Check the orifice hole in the collector box, it must be free or burrs on both sides.
3. Make sure burners are clean, not out of position and line up correctly with heat exchanger tubes, including the heat exchanger orifice plate - this is the plate which mounts to the front panel of the heat exchanger between the burners and the heat exchanger tubes, make sure it is not loose, missing a screw or hanging down between the burners and heat exchanger causing flame impingement.
4. Make sure the field installed gas line is not binding and causing distortion of burner assembly.
5. If the furnace is installed as a one pipe system; make sure the surrounding area and structure are adequate to provide combustion air.
6. Make sure there are no cabinet air leakes allowing supply air to affect combustion.
7. If heat exchanger integrity is uncertain, follow procedures in Service Bulletin SF-041.

TROUBLESHOOTING

Service Problem	No Heat			Unsatisfactory Heat						Test Method Remedy	See Service Procedure Reference
POSSIBLE CAUSE DOTS IN ANALYSIS GUIDE INDICATE "POSSIBLE CAUSE" SYMPTOM	System Will Not Start	Burner Won't Ignite	Burner Ignites-Locks Out	Burner Shuts Off prior to T'Stat being Satisfied	Short Cycles	Long Cycles	Soot and /or Fumes	Too Much Heat	Not Enough Heat		
Pow er Failure	●									Test Voltage	S-1
Blow n Fuse	●									Test Voltage	S-4
Loose Connection	●									Check Wiring	S-2
Shorted or Broken Wires	●									Check Wiring	S-3A
No Low Voltage	●									Check Transformer	S-4
Faulty Thermostat	●				●	●		●	●	Check Thermostat	S-3A
Faulty Transformer	●									Check Transformer	S-4
Poor or High Resistance Ground			●							Measure Ground Resistance	S-17B
Improper Heat Anticipator Setting					●	●		●	●	Adjust Heat Anticipator Setting	S-3B
Improper Thermostat Location					●	●		●	●	Relocate Thermostat	S-316
Faulty Limit or Roll Out Sw itch		●		●						Test Control	S-300 / S-302
Faulty Flame Sensor			●							Test Flame Sensor	S-314
Faulty Ignition Control	●	●	●							Test Control	S-313
Gas Valve or Gas Supply Shut Off		●								Turn Valves to On Position	S-317
Faulty Induced Draft Blow er		●					●			Test Induced Draft Motor	S-303
Faulty Blow er Motor (PSC)		●		●						Test Blow er Motor (PSC)	S-16A,B,C
Broken or Shorted Ignitor		●								Test Ignitor	S-308
Dirty Flame Sensor, Low UA			●							Clean Flame Sensor	S-314
Stuck Gas Valve		●					●	●		Replace Gas Valve	S-304
Faulty Gas Valve		●					●		●	Replace Gas Valve	S-304
Open Auxiliary Limit		●		●						Reset Control	S-301
Improper Air Flow or Distribution				●					●	Check Duct Static	S-200
Cycling on Limit				●	●				●	Check Controls & Temperature Rise	S-201 / S-300
Delayed Ignition							●			Test for Delayed Ignition	S-312
Flashback							●			Test for Flashback	S-309 / S-311
Orifice Size							●	●	●	Check Orifices	S-306 / S-311
Gas Pressure		●					●	●	●	Check Gas Pressure	S-307
Cracked Heat Exchanger							●			Check Burner Flames	S-305
Furnace Undersized						●			●	Replace w ith Proper Size Furnace	S-318
Furnace Oversized					●					Replace w ith Proper Size Furnace	S-318
Faulty Pressure Sw itch		●	●	●						Test Pressure Sw itch	S-310
Blocked or Restricted Flue							●			Check Flue/Draw dow n Pressure	S-310
Open Roll Out Sw itch		●	●							Test Flame Roll Out Control	S-302
Bouncing On Pressure Sw itch			●							Test Negative Pressure	S-310

SERVICE NUMBERS

S-1 Checking Voltage....27
S-2 Checking Wiring....27
S-4 Checking Transformer And Control Circuit....27
S-10B Capacitance Check....28
S-16A Checking Air Circulator Blower Motor....28
S-200 Checking Duct Static....29
S-201 Checking Temperature Rise....29
S-300 Checking Primary Limit Control....29
S-301 Checking Auxiliary Limit Control....30
S-302 Checking Flame Rollout Control....31
S-303 Induced Draft Blower Motor....32
S-304 Checking Gas Valve (Redundant)....32
S-305 Checking Main Burners....32
S-306 Checking Orifices....32
S-307 Checking Gas Pressure....33
S-308 Checking Hot Surface Ignitor....36
S-308A Checking Hot Surface Ignitor....36
S-309 Checking For Flashback....36
S-310 Checking Pressure Switch....36
S-311 High Altitude Application (USA)....36
S-312 Checking For Delayed Ignition....36
S-313 Checking Integrated Ignition Control Boards....37
S-314 Checking Flame Sensor....37

S-1 Checking Voltage

WARNING

HIGH VOLTAGE
Disconnect ALL power before servicing or changing any electrical wiring. Multiple power sources may be present. Failure to do so may cause property damage, personal injury or death.

1. Remove cover from the Junction Box and gain access to incoming power lines.

With Power ON:

WARNING

Line Voltage now present.

2. Using a voltmeter, measure the voltage across the hot and neutral connections.

NOTE: To energize the furnace, the Door Interlock Switch must be engaged at this point.

3. No reading - indicates open wiring, open fuse, no power, or faulty Door Interlock Switch from unit to fused disconnect service. Repair as needed.
4. With ample voltage at line voltage connectors, energize the furnace blower motor by jumpering terminals R to G on the integrated ignition control.
5. With the blower motor in operation, the voltage should be 115 volts ± 10 percent.
6. If the reading falls below the minimum voltage, check the line wire size. Long runs of undersized wire can cause low voltage. If wire size is adequate, notify the local power company of the condition.
7. After completing check and/or repair, replace Junction Box cover and reinstall the service panel doors.
8. Turn on electrical power and verify proper unit operation.

S-2 Checking Wiring

WARNING

Disconnect ALL power before servicing.

1. Check wiring visually for signs of overheating, damaged insulation and loose connections.
2. Use an ohmmeter to check continuity of any suspected open wires.
3. If any wires must be replaced, replace with AWM, 105°C. 2/64 thick insulation of the same gauge or its equivalent.

The heating anticipator setting for furnaces covered in this manual is **0.70 Amps**.

Cooling Anticipator

The cooling anticipator is a small heater (resistor) in the thermostat. During the “OFF” cycle it heats the bimetal element helping the thermostat call for the next cooling cycle. This prevents the room temperature from rising too high before the system is restarted. A properly sized anticipator should maintain room temperature within 1 1/2 to 2 degrees.

The anticipator is fixed in the subbase and is not to be replaced. If the anticipator should fail for any reason, the subbase must be changed.

S-4 Checking Transformer And Control Circuit

A step-down transformer 120 volt primary to 24 volt secondary, 40 VA (Heating and Cooling Models) supplies ample capacity of power for either operation.

WARNING

HIGH VOLTAGE
Disconnect ALL power before servicing or installing this unit. Multiple power sources may be present. Failure to do so may cause property damage, personal injury or death.

SERVICING

1. Remove blower compartment door to gain access to the thermostat low voltage wires located at the furnace integrated control module.
2. Remove the thermostat low voltage wires at the furnace integrated control module terminals.

With Power On (and Door Interlock Switch closed):

WARNING

LINE VOLTAGE NOW PRESENT.

3. Use a voltmeter, check voltage across terminals R and C. Must read 24 VAC.
4. No voltage indicates faulty transformer, open fuse, bad wiring, bad splice, or open door interlock switch.
5. Check transformer primary voltage at incoming line voltage connections, fuse, splices, and blower door interlock switch.
6. If line voltage is available to the primary side of transformer and not at secondary side, the transformer is inoperative. Replace.
7. After completing check and/or replacement of transformer and check and/or repair of control circuit, reinstall blower compartment door.
8. Turn on electrical power and verify proper unit operation.

S-10B CAPACITANCE CHECK

WARNING

LINE VOLTAGE NOW PRESENT.

WARNING

HIGH VOLTAGE
DISCONNECT ALL POWER BEFORE SERVICING OR INSTALLING THIS UNIT. MULTIPLE POWER SOURCES MAY BE PRESENT. FAILURE TO DO SO MAY CAUSE PROPERTY DAMAGE, PERSONAL INJURY OR DEATH.

1. Remove blower compartment door to gain access to capacitor.
2. Discharge capacitor and remove wire leads.
3. Once the capacitor is discharged, use a capacitor tester to determine the condition of the capacitor. A good capacitor will have a reading within 5% of the rated value.

S-16A CHECKING AIR CIRCULATOR BLOWER MOTOR

WARNING

DISCONNECT ALL POWER BEFORE SERVICING.

1. Remove blower compartment door to gain access to the circulator blower motor and integrated ignition control.
2. Check for any obstruction that would keep the fan wheel / fan motor from turning.
3. Check wiring, the motor has two wiring harnesses, a main harness and a control harness. The main pin harness has:

White neutral wire connected to the Neutral terminal on the control board.

Black wire connected to the CIRC H terminal on the control board.

Red wire connected to the COM terminal, which is a female spade connection next to the T1 – T5 wires on the control board.

Green ground wire connected to cabinet ground

The control harness has:

Blue wire connected to T1 on the control board.
Red wire connected to T2 on the control board.
Orange wire connected to T3 on the control board.
Black wire connected to T4 on the control board.
Yellow wire connected to T5 on the control board.

The multi-speed ECM motor requires a line voltage power supply (black connected to CIRC H and white connected to neutral on the control board) as well as a signal on one of the speed taps (T1-T5).

The speed tap voltage is A.C. and can vary which tap is energized depending on DIP switch selection. The voltage reading from any one of the speed taps is referenced between the female COM terminal next to the speed taps on the control board. From COM to T1 or T2, T3, T4, T5 you should read 24 VAC on the low voltage speed taps depending on airflow selection setting.

S-200 Checking Duct Static

The maximum and minimum allowable external static pressures are found in the specification section. These tables also show the amount of air being delivered at a given static by a given motor speed or pulley adjustment. The furnace motor cannot deliver proper air quantities (CFM) against statics other than those listed.

Too great of an external static pressure will result in insufficient air that can cause excessive temperature rise, resulting in limit tripping, etc. Whereas not enough static may result in motor overloading.
To determine proper air movement, proceed as follows:

1. With clean filters in the furnace, use a draft gauge (inclined manometer) to measure the static pressure of the return duct at the inlet of the furnace. (Negative Pressure)
2. Measure the static pressure of the supply duct. (Positive Pressure)
3. Add the two (2) readings together for total external static pressure.

NOTE: Both readings may be taken simultaneously and read directly on the manometer if so desired. If an air conditioner coil or Electronic Air Cleaner is used in conjunction with the furnace, the readings must also include theses components, as shown in the following drawing.

4. Consult proper tables for the quantity of air.

If the total external static pressure exceeds the minimum or maximum allowable statics, check for closed dampers, registers, undersized and/or oversized poorly laid out duct work.

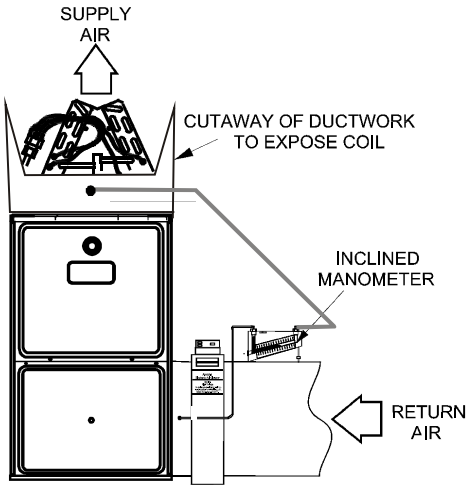

Checking Static Pressure

S-201 Checking Temperature Rise

The more air (CFM) being delivered through a given furnace, the less the rise will be; so the less air (CFM) being delivered, the greater the rise. The temperature rise should be adjusted in accordance to a given furnace specifications and its external static pressure. An incorrect temperature rise may result in condensing in or overheating of the heat exchanger. An airflow and temperature rise table is provided in the blower performance specification section. Determine and adjust temperature rise as follows:

1. Operate furnace with burners firing for approximately ten minutes. Check BTU input to furnace - do not exceed input rating stamped on rating plate. Ensure all registers are open and all duct dampers are in their final (fully or partially open) position.
2. Place thermometers in the return and supply ducts as close to the furnace as possible. Thermometers must not be influenced by radiant heat by being able to “see” the heat exchanger.

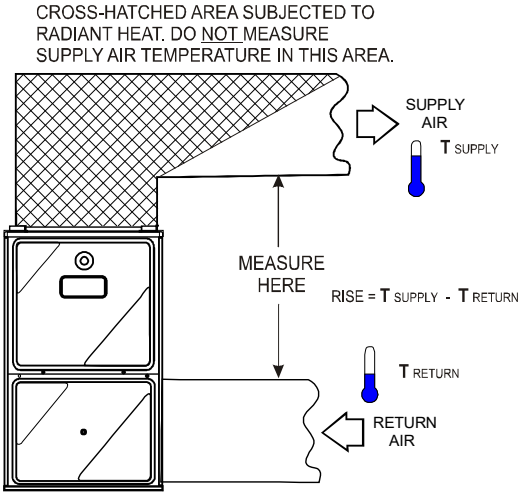

Checking Temperature Rise

3. Subtract the return air temperature from the supply air temperature to determine the air temperature rise. Allow adequate time for thermometer readings to stabilize.
4. Adjust temperature rise by adjusting the circulator blower speed. Increase blower speed to reduce temperature rise. Decrease blower speed to increase temperature rise. Refer to Circulator Blower Speed section in the Product Design section of this manual for speed changing details. Temperature rise is related to the BTUH output of the furnace and the amount of air (CFM) circulated over the heat exchanger. Measure motor current draw to determine that the motor is not overloaded during adjustments.

S-300 Checking Primary Limit Control

All primary limit controls are nonadjustable, automatic reset, bi-metal type limit control. Refer to the following drawing for the location of the primary limit.

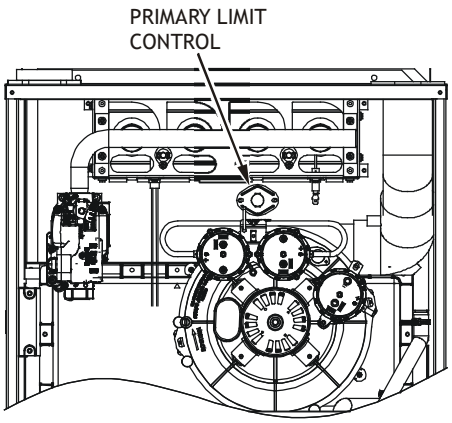

PRIMARY LIMIT CONTROL LOCATION (90% UPFLOW FURNACE SHOWN, COUNTERFLOW SIMILAR)

The following drawing illustrates the style of limit switches used on the 90% furnaces.

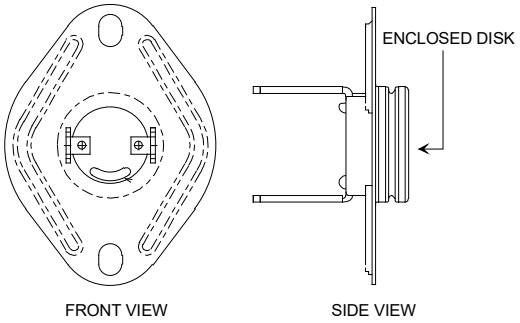

PRIMARY LIMIT CONTROL STYLE (90% FURNACES)

WARNING

HIGH VOLTAGE
DISCONNECT ALL POWER BEFORE SERVICING OR INSTALLING THIS UNIT. MULTIPLE POWER SOURCES MAY BE PRESENT. FAILURE TO DO SO MAY CAUSE PROPERTY DAMAGE, PERSONAL INJURY OR DEATH.

1. Remove burner compartment door to gain access to the primary limit.
2. Remove low voltage wires at limit control terminals.
3. With an ohmmeter, test between these two terminals as shown in the following drawing. The ohmmeter should read continuous unless heat exchanger temperature is above limit control setting. If not as above, replace the control.

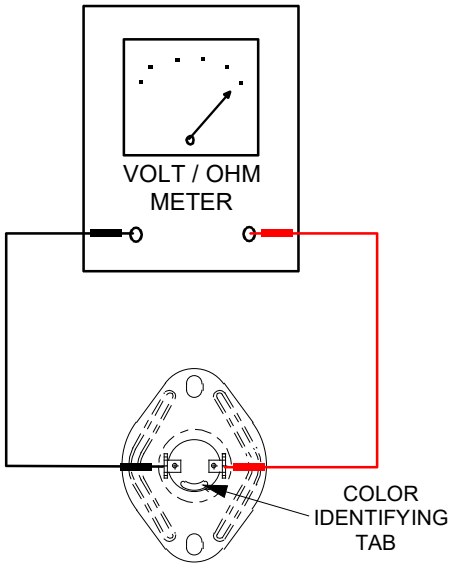

TESTING PRIMARY LIMIT CONTROL (90% FURNACES)

4. After completing check and/or replacement of primary limit control, reinstall burner compartment door.
5. Turn on electrical power and verify proper unit operation.

S-301 CHECKING AUXILIARY LIMIT CONTROL

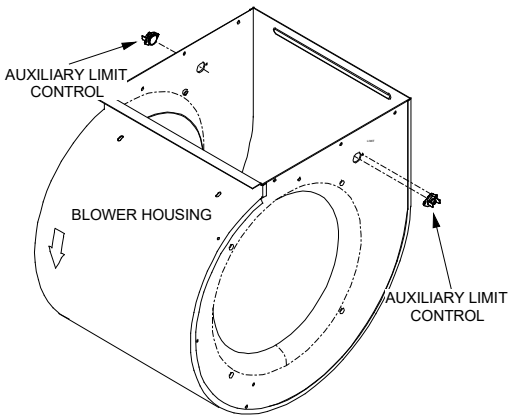

AUXILIARY LIMIT CONTROL LOCATION

WARNING

HIGH VOLTAGE
DISCONNECT ALL POWER BEFORE SERVICING OR INSTALLING THIS UNIT. MULTIPLE POWER SOURCES MAY BE PRESENT. FAILURE TO DO SO MAY CAUSE PROPERTY DAMAGE, PERSONAL INJURY OR DEATH.

1. Remove blower compartment door to gain access to the auxiliary.
2. Remove the wires from the auxiliary limit control terminals.
3. Using an ohmmeter, test for continuity across the two terminals.

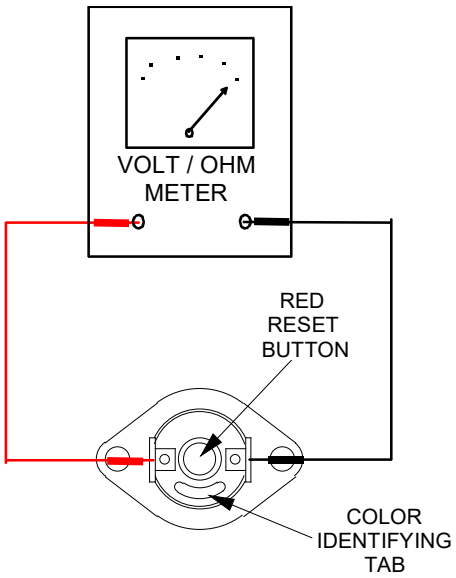

Testing Auxiliary Limit Control

WARNING

To avoid possible fire, only reset the auxiliary limit control once. If it should open a second time, a qualified servicer must determine why the auxiliary limit opened before resetting again.

NOTE: If it becomes necessary to slide the blower assembly out of any 90% single-stage upflow furnace, the auxiliary limit control must be removed from the blower deck before the blower assembly can be removed. After the blower assembly is reinstalled, the auxiliary limit must be reinstalled.

S-302 Checking Flame Rollout Control

A temperature activated manual reset control is mounted to the manifold assembly as shown in the following illustration.

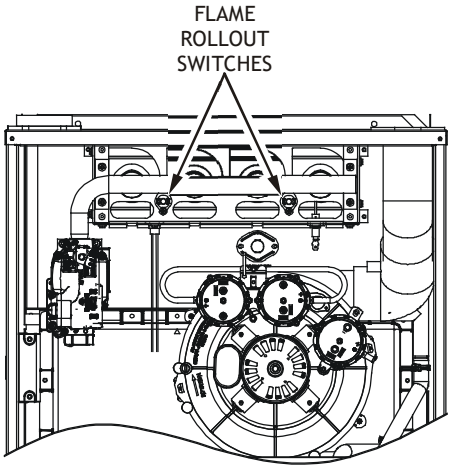

Flame Rollout Switch Location (90% Upflow Furnace Shown, Counterflow Similar)

The control is designed to open should a flame roll out occur. An over firing condition or flame impingement on the heat shield may also cause the control to open. If the rollout control opens, the air circulation blower will run continuously.

WARNING

Line Voltage now present.

1. Remove the burner compartment door to gain access to the rollout switch(es) mounted to burner bracket.
2. Reset the manual roll out switch
3. Remove wires from roll out switch
4. Using an ohmmeter, check for continuity across the switch.
5. If the switch will not close after manually resetting, it must be replaced.
6. Measure the voltage between each side of the rollout control and ground during the ignition attempt. If a roll out switch has tripped, it is important to find out why. Possible causes could be flame impingement, orifice plate out of position, burners with excessive cross-over slot dimension, over-firing, improper orifices, improper gas pressure, air leaking from around the heat exchanger into the burner compartment, air leaking through the heat exchanger itself.
7. After check and/or replacement of rollout switch, reinstall burner compartment door and verify proper unit operation.

WARNING

Line Voltage now present.

1. Remove the burner compartment door to gain access to the rollout switch(es) mounted to burner bracket.
2. Reset the manual roll out switch
3. Remove wires from roll out switch
4. Using an ohmmeter, check for continuity across the switch.
5. If the switch will not close after manually resetting, it must be replaced.
6. Measure the voltage between each side of the rollout control and ground during the ignition attempt. If a roll out switch has tripped, it is important to find out why. Possible causes could be flame impingement, orifice plate out of position, burners with excessive cross-over slot dimension, over-firing, improper orifices, improper gas pressure, air leaking from around the heat exchanger into the burner compartment, air leaking through the heat exchanger itself.
7. After check and/or replacement of rollout switch, reinstall burner compartment door and verify proper unit operation.

S-303 Induced Draft Blower Motor

WARNING

HIGH VOLTAGE
Disconnect ALL power before servicing or installing this unit. Multiple power sources may be present. Failure to do so may cause property damage, personal injury or death.

1. Remove burner compartment door to gain access to the induced draft blower motor.
2. Disconnect the motor wire leads from its connection point at the induced draft motor.
3. Using a ohmmeter, test for continuity between each of the motor leads.
4. Touch one probe of the ohmmeter to the motor frame (ground) and the other probe in turn to each lead If the windings do not test continuous or a reading is obtained to ground, replace the motor.
5. If the windings have a continuity reading, reconnect wires. Turn power on to the furnace and turn the thermostat on in the heating mode. Check voltage for 115V at the induced draft motor terminals during the trial for ignition. If you have 115V and the motor does not run, replace the induced draft motor.
6. After completing check and/or replacement of induced draft motor, reinstall burner compartment door.
7. Turn on electrical power and verify proper unit operation.

S-304 Checking Gas Valve (Redundant)

A combination redundant operator type gas valve which provides all manual and automatic control functions required for gas fired heating equipment is used.

The valve provides control of main burner gas flow, pressure regulation, and 100 percent safety shut-off.

WARNING

Disconnect ALL power before servicing.

Single stage gas valves should be tested on the furnace with 24 VAC connected to the gas valve and manometers reading supply line and manifold pressures.

S-305 Checking Main Burners

Burners have been redesigned for 34.5” chassis furnaces. Overall length and width dimensions remain the same as 40” model burners. The burners used 34.5” models have burner head insert with larger diameter center hole and a larger number of surrounding holes.

The main burners are used to provide complete combustion of various fuels in a limited space, and transfer this heat of the burning process to the heat exchanger. Proper ignition, combustion, and extinction are primarily due to burner design, orifice sizing, gas pressure, primary and secondary air, vent and proper seating of burners.

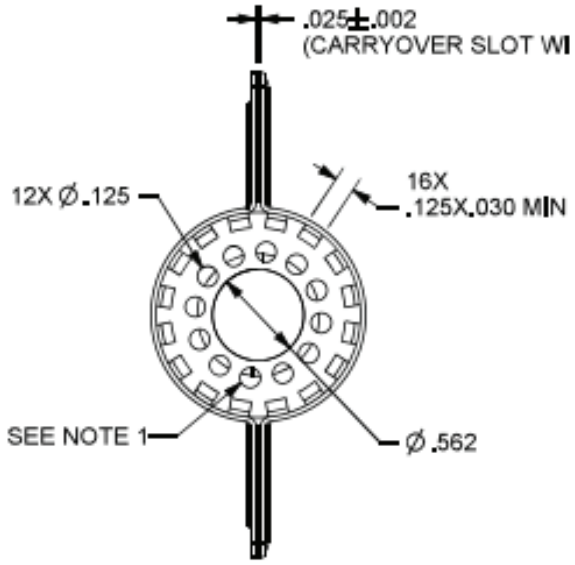

Beckett Burner

WARNING

Disconnect ALL power before servicing.

In checking main burners, look for signs of rust, oversized and undersized carry over ports restricted with foreign material, etc, burner cross-over slots should not be altered in size.

S-306 Checking Orifices

S model furnaces have factory installed #43 natural gas orifices.

The only time resizing is required is when a reduction in firing rate is required for an increase in altitude or a furnace is being converted for use with LP gas.

Orifices should be treated with care in order to prevent damage. They should be removed and installed with a box-end wrench in order to prevent distortion. In no instance should an orifice be peened over and redrilled. This will change the angle or deflection of the vacuum effect or entraining of primary air, which will make it difficult to adjust the flame properly. This same problem can occur if an orifice spud of a different length is substituted.

WARNING

DISCONNECT ALL GAS AND ELECTRIC POWER SUPPLY.

1. Check orifice visually for distortion and/or burrs.
2. Check orifice size with orifice sizing drills.

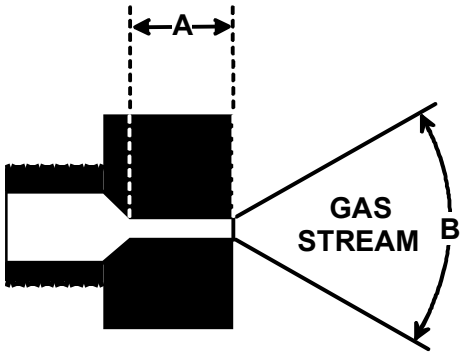

The length of Dimension “A” determines the angle of Gas Stream “B”.

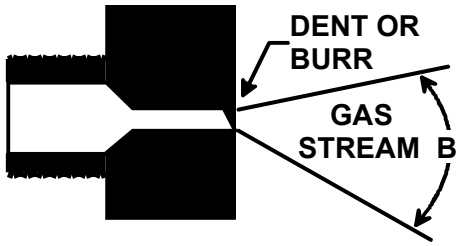

A dent or burr will cause a severe deflection of the gas stream.

S-307 CHECKING GAS PRESSURE

Gas Supply Pressure Measurement

CAUTION

TO PREVENT UNRELIABLE OPERATION OR EQUIPMENT DAMAGE, THE INLET GAS SUPPLY PRESSURE MUST BE AS SPECIFIED ON THE UNIT RATING PLATE WITH ALL OTHER HOUSEHOLD GAS FIRED APPLIANCES OPERATING.

Gas inlet and manifold pressures should be checked and adjusted in accordance to the type of fuel being consumed.

The line pressure supplied to the gas valve must be within the range specified below. The supply pressure can be measured at the gas valve inlet pressure tap or at a hose fitting installed in the gas piping drip leg. The supply pressure must be measured with the burners operating. To measure the gas supply pressure, use the following procedure.

WARNING

DISCONNECT ELECTRICAL POWER AND SHUT OFF GAS SUPPLY.

1. After turning off gas to furnace at the manual gas shutoff valve external to the furnace, remove burner compartment door to gain access to the gas valve.
2. Connect a calibrated water manometer (or appropriate gas pressure gauge) at either the gas valve inlet pressure tap or the gas piping drip leg as shown in the following figures.

NOTE: AT EITHER LOCATION, A HOSE FITTING MUST BE INSTALLED PRIOR TO MAKING THE HOSE CONNECTION.

NOTE: USE ADAPTER KIT #0151K00000S TO MEASURE GAS PRESSURE ON WHITE-RODGERS AND 36[G/J]54 GAS VALVES.

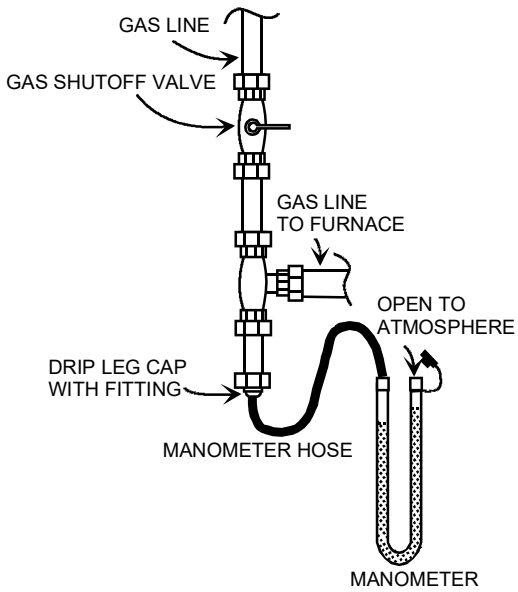

MEASURING INLET GAS PRESSURE (ALTERNATE METHOD)

3. Turn ON the gas and electrical power supply and operate the furnace and all other gas consuming appliances on the same gas supply line.
4. Measure furnace gas supply pressure with burners firing. Supply pressure must be within the range specified in the following table.

INLET GAS SUPPLY PRESSURE		
Natural Gas	Minimum: 4.5" w.c.	Maximum: 10.0" w.c.
Propane Gas	Minimum: 11.0" w.c.	Maximum: 13.0" w.c.

If supply pressure differs from above, make necessary adjustments to pressure regulator, gas piping size, etc., and/or consult with local gas utility.

WARNING

HIGH VOLTAGE
DISCONNECT ALL POWER BEFORE SERVICING OR INSTALLING THIS UNIT. MULTIPLE POWER SOURCES MAY BE PRESENT. FAILURE TO DO SO MAY CAUSE PROPERTY DAMAGE, PERSONAL INJURY OR DEATH.

5. Disconnect manometer after turning off gas at manual shutoff valve. Reinstall plug before turning on gas to furnace.
6. Turn OFF any unnecessary gas appliances started in step 3.
7. Turn on gas to furnace and check for leaks. If leaks are found, repair and then reinstall burner compartment door.
8. Turn on electrical power and verify proper unit operation.

WARNING

HIGH VOLTAGE
DISCONNECT ALL ELECTRICAL POWER AND SHUT OFF GAS SUPPLY BEFORE SERVICING OR INSTALLING THIS UNIT. MULTIPLE POWER SOURCES MAY BE PRESENT. FAILURE TO DO SO MAY CAUSE PROPERTY DAMAGE, PERSONAL INJURY OR DEATH.

GAS MANIFOLD PRESSURE MEASUREMENT AND ADJUSTMENT

CAUTION

TO PREVENT UNRELIABLE OPERATION OR EQUIPMENT DAMAGE, THE GAS MANIFOLD PRESSURE MUST BE AS A SPECIFIED ON THE UNIT RATING PLATE. ONLY MINOR ADJUSTMENTS SHOULD BE MADE BY ADJUSTING THE GAS VALVE PRESSURE REGULATOR.

NOTE: USE ADAPTER KIT #0151K00000S TO MEASURE GAS PRESSURE ON WHITE-RODGERS 36J22 GAS VALVES.

Only small variations in gas pressure should be made by adjusting the gas valve pressure regulator. The manifold pressure must be measured with the burners operating. To measure and adjust the manifold pressure, use the following procedure.

WARNING

HIGH VOLTAGE
DISCONNECT ALL ELECTRICAL POWER AND SHUT OFF GAS SUPPLY BEFORE SERVICING OR INSTALLING.

1. After turning off gas to furnace at the manual gas shutoff valve external to the furnace, remove burner compartment door to gain access to the gas valve.
2. Connect a calibrated water manometer (or appropriate gas pressure gauge) at the gas valve outlet pressure tap. Refer to Measuring Gas Pressure: Single Stage Valves figure for single stage valve outlet pressure tap connections.

WARNING

LINE VOLTAGE NOW PRESENT.

3. Turn ON the gas and electrical power supply and operate the furnace.
4. Measure gas manifold pressure with burners firing. Adjust manifold pressure using the table below.

Manifold Gas Pressure	
Natural Gas	3.5" w.c.
Propane Gas	10.0" w.c.

The final manifold pressure must not vary more than ± 0.3“ w.c. from the above specified pressures. Any necessary major changes in gas flow rate should be made by changing the size of the burner orifice.

5. White-Rodgers 36J22 Valves:
   a. Back outlet pressure test screw (inlet/outlet pressure boss) out one turn (counterclockwise, not more than one turn).
   b. Attach a hose and manometer to the outlet pressure outlet pressure boss.
   c. Turn ON the gas supply.
   d. Turn on power and close thermostat “R” and “W1” contacts to provide a call for heat.
   e. Measure the gas manifold pressure with burners firing. Adjust manifold pressure using the Manifold Gas Pressure table shown below.
   f. Remove regulator cover screw from the outlet pressure regulator adjust tower and turn screw clockwise to increase pressure or counterclockwise to decrease pressure. Replace regulator cover screw.
   g. Turn off all electrical power and gas supply to the system.
   h. Remove the manometer hose from the hose barb fitting or outlet pressure boss.
   i. Turn outlet pressure test screw in to seal pressure port (clockwise, 7 in-lb minimum).

6. Honeywell VR8215 Valve:
   a. Remove the outlet pressure boss plug. Install an ⅛” NPT hose barb fitting into the outlet pressure tap.
   b. Attach a hose and manometer to the outlet pressure barb fitting.
   c. Turn ON the gas supply.
   d. Turn on power and close thermostat “R” and “W1” contacts to provide a call for low stage heat.
   e. Measure the gas manifold pressure with burners firing. Adjust manifold pressure using the Manifold Gas Pressure table shown below.

f. Remove regulator cover screw from the outlet pressure regulator adjust tower and turn screw clockwise to increase pressure or counterclockwise to decrease pressure. Replace regulator cover screw.
g. Turn off all electrical power and gas supply to the system.
h. Remove the manometer hose from the hose barb fitting or outlet pressure boss.
i. Remove the ⅛" NPT hose barb fitting from the outlet pressure tap. Replace the outlet pressure boss plug and seal with a high quality thread sealer.

WARNING

HIGH VOLTAGE
DISCONNECT ALL ELECTRICAL POWER AND SHUT OFF GAS SUPPLY BEFORE SERVICING OR INSTALLING THIS UNIT. MULTIPLE POWER SOURCES MAY BE PRESENT. FAILURE TO DO SO MAY CAUSE PROPERTY DAMAGE, PERSONAL INJURY OR DEATH.

7. Turn on gas to furnace and check for leaks. If leaks are found, repair and then reinstall burner compartment door.
8. Turn on electrical power and verify proper unit operation.

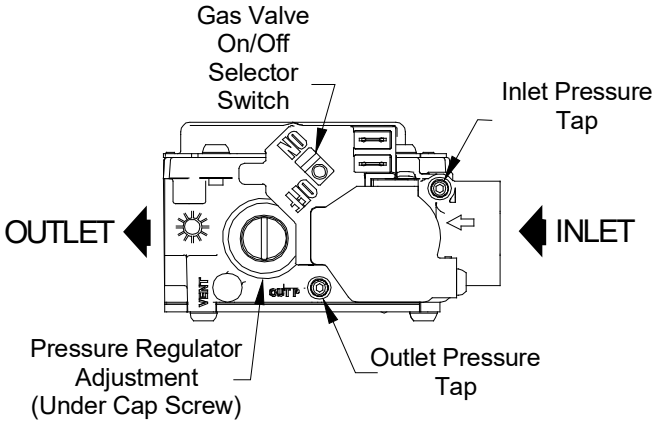

WHITE-RODGERS MODEL 36J22 (SINGLE-STAGE)

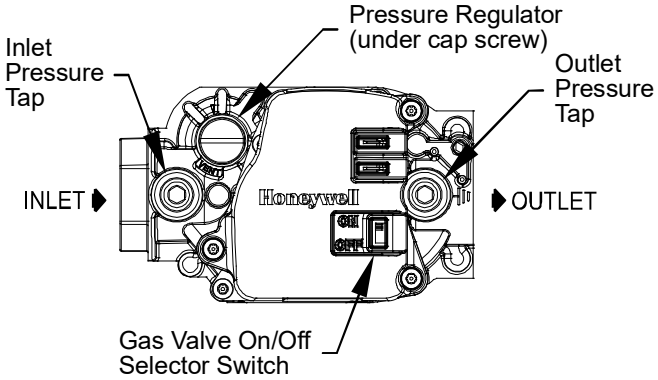

HONEYWELL MODEL VR8215

Manifold Gas Pressure			
Gas	**Rate**	**Range**	**Nominal**
Propane Gas	High Stage	9.7 to 10.3" w.c.	10.0" w.c.
	Low Stage	5.7 to 6.3" w.c.	6.0" w.c.

S-308 CHECKING HOT SURFACE IGNITOR

Single stage furnaces use a 115 volt silicon carbide igniter (p/n 0130F00008) with 17-second warm up time.

WARNING

DISCONNECT ALL POWER BEFORE SERVICING.

1. Remove burner compartment door to gain access to the ignitor.
2. Ignitor cool - approximately 70 - 77°F.
3. Disconnect the ignitor from the Ignition Control.
4. Using an ohmmeter measure the resistance of the ignitor: at room temperature a normal reading will be 37 - 68 ohms.
5. Reconnect ignitor.

WARNING

LINE VOLTAGE NOW PRESENT.

6. Place unit in heating cycle, measure current draw of ignitor during preheat cycle.
   a. Turn off all electrical power and gas supply to the system.
   b. Remove the manometer hose from the outlet pressure boss.
   c. Remove the ⅛" NPT hose barb fitting from the outlet pressure tap. Replace the outlet pressure boss plug and seal with a high quality thread sealer.

WARNING

HIGH VOLTAGE
DISCONNECT ALL ELECTRICAL POWER AND SHUT OFF GAS SUPPLY BEFORE SERVICING OR INSTALLING.

7. Turn on gas to furnace and check for leaks. If leaks are found, repair and then reinstall burner compartment door.
8. Turn on electrical power and verify proper unit operation. Make sure furnace operates at the proper manifold pressure at both high and low stage outputs.

Manifold Gas Pressure			
Gas	Rate	Range	Nominal
Natural Gas	High Stage	3.2 to 3.8" w.c.	3.5" w.c.
	Low Stage	1.6 to 2.2" w.c.	1.9" w.c.

WARNING

HIGH VOLTAGE
DISCONNECT ALL ELECTRICAL POWER AND SHUT OFF GAS SUPPLY BEFORE SERVICING OR INSTALLING THIS UNIT. MULTIPLE POWER SOURCES MAY BE PRESENT. FAILURE TO DO SO MAY CAUSE PROPERTY DAMAGE, PERSONAL INJURY OR DEATH.

WARNING

HIGH VOLTAGE
DISCONNECT ALL ELECTRICAL POWER AND SHUT OFF GAS SUPPLY BEFORE SERVICING OR INSTALLING.

Manifold Gas Pressure			
Gas	Rate	Range	Nominal
Propane Gas	High Stage	9.7 to 10.3" w.c.	10.0" w.c.
	Low Stage	5.7 to 6.3" w.c.	6.0" w.c.

S-308A Checking Hot Surface Ignitor

120V Silicon Nitride Igniter - Daikin Brand model furnaces use a 120V silicon nitride igniter for ignition. The normal operating temperature is approximately 2156°F - 2678°F. At room temperature the igniter ohm reading should be from 37-68 ohms.

1. Place unit in heating cycle, measure current draw of ignitor during preheat cycle.
   The steady state current at 120V is 0.37 to 0.68 amps.
2. After checking and/or replacing of hot surface ignitor, reinstall burner compartment door and verify proper unit operation.

S-309 Checking For Flashback

Flashback will also cause burning in the burner venturi, but is caused by the burning speed being greater than the gas-air flow velocity coming from a burner port.

Flashback may occur at the moment of ignition, after a burner heats up or when the burner turns off. The latter is known as extinction pop.

Since the end results of flashback and delayed ignition can be the same (burning in the burner venturi) a definite attempt should be made to determine which has occurred.

If flashback should occur, check for the following:

1. Improper gas pressure - adjust to proper pressure (See S-307 *CHECKING GAS PRESSURE*).
2. Check burner for proper alignment and/or replace burner.
3. Improper orifice size - check orifice for obstruction.

S-310 Checking Pressure Switch

The pressure control is a safety device to prevent the combustion cycle from occurring with inadequate venting caused by a restricted or blocked vent pipe. In addition to the inducer pressure switch, S model furnaces have a “front cover pressure switch” wired in series with the gas valve. This pressure switch keeps the gas valve from opening in the event of condensate backing up in the secondary heat exchanger. This could occur from improperly connected drains or a plugged drain tube.

WARNING

HIGH VOLTAGE
DISCONNECT ALL POWER BEFORE SERVICING OR INSTALLING THIS UNIT. MULTIPLE POWER SOURCES MAY BE PRESENT. FAILURE TO DO SO MAY CAUSE PROPERTY DAMAGE, PERSONAL INJURY OR DEATH.

1. Remove burner compartment door to gain access to pressure switch(es).
2. Remove wires from the pressure switch(es) electrical terminals.
3. Remove the pressure control hose from the control and interconnect with an inclined manometer as shown in the following figures.
4. With an ohm meter connected across the pressure switch terminals; with the inducer running the switch should close and the ohm meter should show a complete circuit across the pressure switch. If the switch is not closed, compare the negative pressure to the closing point specified for the particular switch. Either the switch is defective or the inducer / venting system is inadequate.

S-311 High Altitude Application (USA)

A high altitude kit is required for installations above 7,000 ft. Refer to the accessory matrix in this manual to determine the proper natural gas and LP gas high altitude kit for your furnace.

S-312 Checking For Delayed Ignition

Delayed ignition is a delay in lighting a combustible mixture of gas and air which has accumulated in the combustion chamber.

Furnace design makes this extremely unlikely unless safety controls have been by-passed or tampered with. Never bypass or alter furnace controls.

If delayed ignition should occur, the following should be checked:

1. Improper gas pressure - adjust to proper pressure (See *S-307 Checking Gas Pressure*).
2. Improper burner positioning - burners should be in locating slots, level front to rear and left to right.
3. Carry over (lighter tube or cross lighter) obstructed - clean.
4. Main burner orifice(s) deformed, or out of alignment to burner - replace.

S-313 Checking Integrated Ignition Control Boards

NOTE: Failure to earth ground the furnace, reversing the neutral and hot wire connection to the line (polarity), or a high resistance connection in the neutral line may cause the control to lockout due to failure to sense flame.

WARNING

To avoid the risk of electrical shock, wiring to the unit must be properly polarized and grounded. Disconnect power before performing service listed below.

The ground wire must run from the furnace all the way back to the electrical panel. Proper grounding can be confirmed by disconnecting the electrical power and measuring resistance between the neutral (white) connection and the burner closest to the flame sensor. Resistance should be less than 2 ohms.

The ignition control is a combination electronic and electromechanical device and is not field repairable. Complete unit must be replaced.

WARNING

Line Voltage now present.

These tests must be completed within a given time frame due to the operation of the ignition control.

The ignition control is capable of diagnosing many furnace failures to help in troubleshooting. The trial for ignition period is 4 seconds.

1. Check for 120 volts from Line 1 (Hot) to Line 2 (Neutral) at the ignition control. No voltage, check the door switch connections and wire harness for continuity.
2. Check for 24 volts from W to C terminal on the ignition control. No voltage. Check transformer, room thermostat, and wiring.
   If you have 24 volts coming off the transformer but receive approximately 13 volts on the terminal board between (C) and (R), check for blown fuse.
3. Check for 120 volts to the induced draft blower by measuring voltage between Pin 1 (on the 2-pin connector) and neutral located on circuit board. No voltage, check for loose connection in the 2-pin connector or replace ignition control.
4. If voltage is present in Steps 1 through 3 and the induced draft blower is operating, check for 120 volts to the ignitor during the preheat cycle. Measure voltage between Pin 2 (on the 2-pin connector) and neutral located on ignition control. No voltage, check pressure switch or replace the ignition control board.
5. After the ignitor warmup time, begin checking for 24 volts to the gas valve. Voltage will be present for four seconds only if proof of flame has been established.
6. If proof of flame was established voltage will be provided to the air circulation blower following the heat on delay period.

S-314 Checking Flame Sensor

A flame sensing device is used in conjunction with the ignition control module to prove combustion. If proof of flame is not present the control will de-energize the gas valve and “retry” for ignition or lockout.

WARNING

HIGH VOLTAGE
Disconnect ALL power before servicing or installing this unit. Multiple power sources may be present. Failure to do so may cause property damage, personal injury or death.

1. Connect a micro-amp meter in series with this wire and the sensor terminal.
2. Be sure the positive side of the meter is to Blue wire and the negative side of the meter is to sensor terminal.

WARNING

Line Voltage now present.

3. Place the unit into a heating cycle.
4. As soon as flame is established a micro-amp reading should be evident once proof of flame (micro-amp reading) is established, the hot surface ignitor will be de-energized.
5. The Integrated Ignition controls will have 1 to 4 micro-amps. If the micro-amp reading is less than the minimum specified, check for high resistance wiring connections, sensor to burner gap, dirty flame sensor, or poor grounding.
6. If absolutely no reading, check for continuity on all components and if good - replace ignition control module.

NOTE: Contaminated fuel or combustion air can create a nearly invisible coating on the flame sensor. This coating works as an insulator causing a loss in the flame sense signal. If this situation occurs the flame sensor must be cleaned with steel wool.

WARNING

HIGH VOLTAGE
Disconnect ALL power before servicing or installing this unit. Multiple power sources may be present. Failure to do so may cause property damage, personal injury or death.

CAUTION

If you must handle the igniter, handle with care. Touching the igniter body with bare fingers, rough handling, or vibration could result in early ingitor failure. Only a qualified servicer should ever handle the igniter.

Annual Inspection

The furnace should be inspected by a qualified installer, or service agency at least once per year. This check should be performed at the beginning of the heating season. This will ensure that all furnace components are in proper working order and that the heating system functions appropriately. Pay particular attention to the following items. Repair or service as necessary.

- Flue pipe system. Check for blockage and/or leakage. Check the outside termination and the connections at and internal to the furnace.
- Combustion air intake pipe system (where applicable). Check for blockage and/or leakage. Check the outside termination and the connection at the furnace.
- Heat exchanger. Check for corrosion and/or buildup within the heat exchanger passageways.
- Burners. Check for proper ignition, burner flame, and flame sense.
- Drainage system. Check for blockage and/or leakage. Check hose connections at and internal to furnace.
- Wiring. Check electrical connections for tightness and/or corrosion. Check wires for damage.
- Filters.

Air Filter

WARNING

Never operate furnace without a filter installed as dust and lint will build up on internal parts resulting in loss of efficiency, equipment damage, and possible fire.

Filters must be used with this furnace. Filters do not ship with these furnaces but must be provided by the installer for proper furnace operation.

Remember that dirty filters are the most common cause of inadequate heating or cooling performance.

WARNING

HIGH VOLTAGE
Disconnect ALL power before servicing, removing the filter or performing any other maintenance. Multiple power sources may be present. Failure to do so may cause property damage, personal injury or death.

MAINTENANCE

Improper filter maintenance is the most common cause of inadequate heating or cooling performance. Filters should be cleaned (permanent) or replaced (disposable) every two months or as required. It is the owner's responsibility to keep air filters clean. When replacing a filter, it must be replaced with a filter of the same type and size.

FILTER REMOVAL

Depending on the installation, differing filter arrangements can be applied. Filters can be installed in the central return register, the bottom of the blower compartment (upflow only), a side panel external filter rack kit (upflow only), or the ductwork above a counterflow furnace. A media air filter or electronic air cleaner can be used as an alternate filter. The filter sizes given in the Product Design section of this manual or the product Specification Sheet must be followed to ensure proper unit performance. Refer to the following information for removal and installation of filters.

Filter Removal Procedure Media Air Filter or Electronic Air Cleaner Removal

Follow the manufacturer's directions for service.

Upright Counterflow Filter Removal

To remove filters from the ductwork above an upright counterflow installation:

1. Turn off electrical power to furnace.
2. Remove access door in ductwork above furnace.
3. Remove filters.
4. Remove blower compartment door. Vacuum compartment. Replace blower compartment door.
5. Replace filters opposite of removal.
6. Replace access door in ductwork.

Horizontal Unit Filter Removal

Filters in horizontal installations are located in the central return register.

Induced Draft And Circulation Blowers

The bearings in the induced draft blower and circulator blower motors are permanently lubricated by the manufacturer. No further lubrication is required. Check motor windings for accumulation of dust which may cause overheating. Clean as necessary.

Condensate Drainage System (Qualified Servicer Only)

The drain tubes, standpipe, and field supplied drain line must be checked annually and cleaned as often as necessary to ensure proper condensate drainage.

Flame Sensor (Qualified Servicer Only)

Under some conditions, the fuel or air supply can create a nearly invisible coating on the flame sensor. This coating acts as an insulator, causing a drop in the flame sensing signal. If this occurs, a qualified servicer must carefully clean the flame sensor with steel wool. After cleaning, the flame sensor output should be as listed on the specification sheet.

BURNERS

WARNING

HIGH VOLTAGE
Electrical components are contained in both compartments. To avoid electrical shock, injury or death, do not remove any internal compartment covets or attempt any adjustment. Contact a qualified service a gents at once if an abnormal flame appearance should develop.

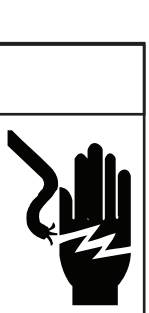

Periodically during the heating season make a visual check of the burner flames. Turn the furnace on at the thermostat. Wait a few minutes since any dislodged dust will alter the normal flame appearance. Flames should be stable, quiet, soft and blue with slightly orange tips. They should not be yellow. They should extend directly outward from the burner ports without curling downward, floating or lifting off the ports.

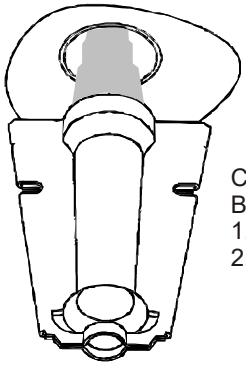

Check the
Burner Flames for:
1. Stable, soft and blue.
2. Not curling, floating or lifting off.

Burner Flame

Test Equipment

Proper test equipment for accurate diagnosis is as essential as regular hand tools.

The following is a must for every service technician and service shop.

1. Dial type thermometers or thermocouple meter (optional) - to measure dry bulb temperature.
2. Amprobe - to measure amperage and voltage.
3. Volt-Ohm Meter - testing continuity, capacitors, and motor windings.
4. Inclined Manometer - to measure static pressure, pressure drop across coils, filters, and draft.
5. Water Manometer (12”) - to test gas inlet and manifold pressure.

Other recording type instruments can be essential in solving abnormal problems, however, in many instances they may be rented from local sources.

MODEL	PRIMARY LIMIT SETTING	PRIMARY LIMIT PART NO.	AUX LIMIT SETTING	AUX LIMIT PART NO.	R.O.S LIMIT SETTING	R.O.S. LIMIT PART NO.
DM96SN0403ANAA	170 ±5	20162906	120	0130F00038	230 ±6	10123538
DM96SN0603BNAA	160 ±5	20162903	120	0130F00038	240 ±10	10123539
DM96SN0803BNAA	150 ±5	20162904	120	0130F00038	230 ±6	10123538
DM96SN0804CNAA	160 ±5	20162903	120	0130F00038	240 ±10	10123539
DM96SN0805CNAA	160 ±5	20162903	120	0130F00038	250 ±9	0130F00123
DM96SN1005CNAA	150 ±5	20162904	120	0130F00038	230 ±6	10123538
DM96SN1205DNAA	150 ±5	20162904	120	0130F00038	275 ±7	10123528
DC96SN0403BNAA	210 ±6	20162901	120	0130F00038	250 ±9	0130F00123
DC96SN0603BNAA	210 ±6	20162901	120	0130F00038	250 ±9	0130F00123
DC96SN0804CNAA	200 ±5	0130F00071	120	0130F00038	220 ±7	10123534
DC96SN1005CNAA	160 ±5	20162903	120	0130F00038	240 ±10	10123539
DC96SN1205DNAA	170 ±5	20162906	120	0130F00038	240 ±10	10123539

DM96SN / DC96SN Pressure Switch Trip Point And Usage Chart

MODEL	Coil Cover Set Point on Pressure Fall W. C.	Coile Cover Max Make Pressure W.C.	ID Blower Set Point on Pressure Fall W. C.	ID Blower Max Make Pressure W. C.	ID Blower Coil Cover Pressure Switch Assembly Part #
DM96SN0403ANAA	- 0.10 ± .05	- 0.25	- 0.35 ± .05	- 0.50	0130F00642
DM96SN0603BNAA	- 0.10 ± .05	- 0.25	- 1.49 ± .07	- 1.70	0130F00478
DM96SN0803BNAA	- 0.10 ± .05	- 0.25	- 1.27 ± .07	- 1.48	0130F00477
DM96SN0804CNAA	- 0.10 ± .05	- 0.25	- 1.27 ± .07	- 1.48	0130F00477
DM96SN0805CNAA	- 0.10 ± .05	- 0.25	- 1.20 ± .05	- 1.41	0130F00480
DM96SN1005CNAA	- 0.10 ± .05	- 0.25	- 0.97 ± .05	- 1.12	0130F00479
DM96SN1205DNAA	- 0.10 ± .05	- 0.25	- 0.75 ± .07	- 0.92	0130F00469
DC96SN0403BNAA	- 0.08 ± .04	- 0.16	- 1.49 ± .07	- 1.70	0130F00484
DC96SN0603BNAA	- 0.10 ± .05	- 0.25	- 1.27 ± .07	- 1.48	0130F00477
DC96SN0804CNAA	- 0.10 ± .05	- 0.25	- 1.27 ± .07	- 1.48	0130F00477
DC96SN1005CNAA	- 0.10 ± .05	- 0.25	- 1.27 ± .07	- 1.48	0130F00477
DC96SN1205DNAA	- 0.10 ± .05	- 0.25	- 0.85 ± .05	- 1.00	0130F00476

DM92SN Pressure Switch Trip Points And Usage Chart

MODEL	COIL COVER Set Point on Pressure Fall W.C.	COIL COVER Max Make Pressure W.C.	ID BLOWER Set Point on Pressure Fall W.C.	ID BLOWER Max Make Pressure W.C.	ID BLOWER COIL COVER Pressure Switch Assembly Part #
DM92SN0403AN	- 0.10 ± .05	-0.25	- 0.20 ± .05	- 0.35	0130F00641
DM92SN0603BN	- 0.10 ± .05	-0.25	- 1.20 ± .05	- 1.41	0130F00442
DM92SN0803BN	- 0.10 ± .05	-0.25	- 0.97 ± .05	- 1.12	0130F00441
DM92SN0804CN	- 0.10 ± .05	-0.25	- 1.20 ± .05	- 1.41	0130F00442
DM92SN0805CN	- 0.10 ± .05	-0.25	- 1.20 ± .05	- 1.20	0130F00442
DM92SN1004CN	- 0.10 ± .05	-0.25	- 0.97 ± .05	- 1.12	0130F00441
DM92SN1005CN	- 0.10 ± .05	-0.25	- 0.97 ± .05	-1.12	0130F00441
DM92SN1205DN	- 0.10 ± .05	-0.25	- 1.20 ± .05	-1.41	0130F00442

AIRFLOW CHARTS - DC96SN

LOW STAGE COOLING AIFLOW

MODEL	THERMOSTAT CALL	TAP #	EXTERNAL STATIC PRESSURE, (INCHES WATER COLUMN)							
			0.1	0.2	0.3	0.4	0.5	0.6	0.7	0.8
			CFM	CFM	CFM	CFM	CFM	CFM	CFM	CFM
DC96SN0403B*	Y/Y1	F01	632	574	510	448	388	332	277	234
		F02	727	677	623	565	510	455	403	351
		F03	878	839	797	751	701	653	607	561
		F04^	948	910	870	828	785	739	693	652
		F05	1106	1076	1044	1010	974	939	899	860
		F06	1156	1125	1096	1063	1028	996	960	927
		F07	1237	1205	1174	1145	1115	1081	1050	1016
		F08	1334	1306	1275	1249	1220	1194	1163	1136
		F09	1382	1354	1327	1302	1276	1246	1219	1190
DC96SN0603B*	Y/Y1	F01	771	698	632	560	491	428	372	307
		F02	1197	1150	1102	1057	1014	968	926	877
		F03	1309	1264	1224	1180	1141	1098	1058	1018
		F04^	1138	1091	1043	993	949	901	853	805
		F05	944	884	824	774	716	660	605	554
		F06	963	907	852	803	745	689	639	587
		F07	1332	1289	1245	1200	1160	1120	1081	1036
		F08	1366	1319	1277	1235	1192	1154	1117	1074
		F09	1468	1436	1393	1359	1323	1285	1248	1210
DC96SN0804C*	Y/Y1	F01	873	778	682	630	578	490	419	347
		F02	1442	1386	1335	1280	1221	1157	1110	1054
		F03	1643	1588	1534	1478	1415	1357	1299	1246
		F04^	1600	1555	1505	1460	1412	1364	1309	1260
		F05	1338	1269	1206	1133	1063	999	934	861
		F06	1796	1744	1691	1638	1584	1532	1473	1422
		F07	1874	1823	1775	1729	1675	1621	1567	1512
		F08	1798	1754	1719	1672	1627	1585	1546	1497
		F09	1991	1947	1900	1854	1808	1759	1707	1655
DC96SN1005C*	Y/Y1	F01	1176	1107	1037	969	891	825	753	692
		F02	1773	1721	1671	1621	1571	1521	1470	1421
		F03	1709	1658	1607	1556	1503	1451	1399	1349
		F04^	1651	1597	1542	1491	1437	1384	1332	1278
		F05	1467	1409	1352	1307	1240	1182	1124	1063
		F06	1834	1785	1738	1691	1643	1593	1545	1502
		F07	1924	1881	1836	1796	1750	1701	1652	1606
		F08	2028	1994	1937	1899	1863	1814	1769	1724
		F09	2193	2145	2106	2076	2032	1998	1945	1903
DC96SN1205D*	Y/Y1	F01	1187	1101	1013	931	847	764	677	604
		F02	1973	1916	1864	1810	1756	1702	1650	1590
		F03	1918	1859	1807	1748	1696	1643	1591	1531
		F04^	1835	1776	1720	1657	1602	1544	1483	1428
		F05	1236	1152	1073	990	919	834	749	679
		F06	1521	1459	1391	1327	1253	1187	1116	1053
		F07	1673	1609	1549	1493	1430	1362	1305	1242
		F08	2033	1981	1929	1878	1822	1771	1716	1669
		F09	2257	2201	2151	2099	2057	2008	1959	1906

NOTE:
^ Default Speed

HIGH STAGE COOLING AIFLOW

MODEL	THERMOSTAT CALL	TAP #	EXTERNAL STATIC PRESSURE, (INCHES WATER COLUMN)							
			0.1	0.2	0.3	0.4	0.5	0.6	0.7	0.8
			CFM	CFM	CFM	CFM	CFM	CFM	CFM	CFM
DC96SN0403B*	Y2	F01	632	574	510	448	388	332	277	234
		F02	727	677	623	565	510	455	403	351
		F03	878	839	797	751	701	653	607	561
		F04	948	910	870	828	785	739	693	652
		F05^	1106	1076	1044	1010	974	939	899	860
		F06	1156	1125	1096	1063	1028	996	960	927
		F07	1237	1205	1174	1145	1115	1081	1050	1016
		F08	1334	1306	1275	1249	1220	1194	1163	1136
		F09	1382	1354	1327	1302	1276	1246	1219	1190
DC96SN0603B*	Y2	F01	771	698	632	560	491	428	372	307
		F02	1197	1150	1102	1057	1014	968	926	877
		F03	1309	1264	1224	1180	1141	1098	1058	1018
		F04	1138	1091	1043	993	949	901	853	805
		F05^	944	884	824	774	716	660	605	554
		F06	963	907	852	803	745	689	639	587
		F07	1332	1289	1245	1200	1160	1120	1081	1036
		F08	1366	1319	1277	1235	1192	1154	1117	1074
		F09	1468	1436	1393	1359	1323	1285	1248	1210
DC96SN0804C*	Y2	F01	873	778	682	630	578	490	419	347
		F02	1442	1386	1335	1280	1221	1157	1110	1054
		F03	1643	1588	1534	1478	1415	1357	1299	1246
		F04	1600	1555	1505	1460	1412	1364	1309	1260
		F05^	1338	1269	1206	1133	1063	999	934	861
		F06	1796	1744	1691	1638	1584	1532	1473	1422
		F07	1874	1823	1775	1729	1675	1621	1567	1512
		F08	1798	1754	1719	1672	1627	1585	1546	1497
		F09	1991	1947	1900	1854	1808	1759	1707	1655
DC96SN1005C*	Y2	F01	1176	1107	1037	969	891	825	753	692
		F02	1773	1721	1671	1621	1571	1521	1470	1421
		F03	1709	1658	1607	1556	1503	1451	1399	1349
		F04	1651	1597	1542	1491	1437	1384	1332	1278
		F05^	1467	1409	1352	1307	1240	1182	1124	1063
		F06	1834	1785	1738	1691	1643	1593	1545	1502
		F07	1924	1881	1836	1796	1750	1701	1652	1606
		F08	2028	1994	1937	1899	1863	1814	1769	1724
		F09	2193	2145	2106	2076	2032	1998	1945	1903
DC96SN1205D*	Y2	F01	1187	1101	1013	931	847	764	677	604
		F02	1973	1916	1864	1810	1756	1702	1650	1590
		F03	1918	1859	1807	1748	1696	1643	1591	1531
		F04	1835	1776	1720	1657	1602	1544	1483	1428
		F05^	1236	1152	1073	990	919	834	749	679
		F06	1521	1459	1391	1327	1253	1187	1116	1053
		F07	1673	1609	1549	1493	1430	1362	1305	1242
		F08	2033	1981	1929	1878	1822	1771	1716	1669
		F09	2257	2201	2151	2099	2057	2008	1959	1906

NOTE:
^ Default Speed

CIRCULATION AIFLOW

MODEL	THERMOSTAT CALL	TAP #	EXTERNAL STATIC PRESSURE, (INCHES WATER COLUMN)							
			0.1	0.2	0.3	0.4	0.5	0.6	0.7	0.8
			CFM	CFM	CFM	CFM	CFM	CFM	CFM	CFM
DC96SN0403B*	G	F01	632	574	510	448	388	332	277	234
		F02	727	677	623	565	510	455	403	351
		F03	878	839	797	751	701	653	607	561
		F04	948	910	870	828	785	739	693	652
		F05	1106	1076	1044	1010	974	939	899	860
		F06	1156	1125	1096	1063	1028	996	960	927
		F07	1237	1205	1174	1145	1115	1081	1050	1016
		F08	1334	1306	1275	1249	1220	1194	1163	1136
		F09	1382	1354	1327	1302	1276	1246	1219	1190
DC96SN0603B*	G	F01	771	698	632	560	491	428	372	307
		F02	1197	1150	1102	1057	1014	968	926	877
		F03	1309	1264	1224	1180	1141	1098	1058	1018
		F04	1138	1091	1043	993	949	901	853	805
		F05	944	884	824	774	716	660	605	554
		F06	963	907	852	803	745	689	639	587
		F07	1332	1289	1245	1200	1160	1120	1081	1036
		F08	1366	1319	1277	1235	1192	1154	1117	1074
		F09	1468	1436	1393	1359	1323	1285	1248	1210
DC96SN0804C*	G	F01	873	778	682	630	578	490	419	347
		F02	1442	1386	1335	1280	1221	1157	1110	1054
		F03	1643	1588	1534	1478	1415	1357	1299	1246
		F04	1600	1555	1505	1460	1412	1364	1309	1260
		F05	1338	1269	1206	1133	1063	999	934	861
		F06	1796	1744	1691	1638	1584	1532	1473	1422
		F07	1874	1823	1775	1729	1675	1621	1567	1512
		F08	1798	1754	1719	1672	1627	1585	1546	1497
		F09	1991	1947	1900	1854	1808	1759	1707	1655
DC96SN1005C*	G	F01	1176	1107	1037	969	891	825	753	692
		F02	1773	1721	1671	1621	1571	1521	1470	1421
		F03	1709	1658	1607	1556	1503	1451	1399	1349
		F04	1651	1597	1542	1491	1437	1384	1332	1278
		F05	1467	1409	1352	1307	1240	1182	1124	1063
		F06	1834	1785	1738	1691	1643	1593	1545	1502
		F07	1924	1881	1836	1796	1750	1701	1652	1606
		F08	2028	1994	1937	1899	1863	1814	1769	1724
		F09	2193	2145	2106	2076	2032	1998	1945	1903
DC96SN1205D*	G	F01	1187	1101	1013	931	847	764	677	604
		F02	1973	1916	1864	1810	1756	1702	1650	1590
		F03	1918	1859	1807	1748	1696	1643	1591	1531
		F04	1835	1776	1720	1657	1602	1544	1483	1428
		F05	1236	1152	1073	990	919	834	749	679
		F06	1521	1459	1391	1327	1253	1187	1116	1053
		F07	1673	1609	1549	1493	1430	1362	1305	1242
		F08	2033	1981	1929	1878	1822	1771	1716	1669
		F09	2257	2201	2151	2099	2057	2008	1959	1906

HEATING AIFLOW

MODEL	THERMOSTAT CALL	TAP #	EXTERNAL STATIC PRESSURE, (INCHES WATER COLUMN)													TEMP RANGE
			0.1		0.2		0.3		0.4		0.5		0.6	0.7	0.8	
			CFM	RISE	CFM	RISE	CFM	RISE	CFM	RISE	CFM	RISE	CFM	CFM	CFM	
DC96SN0403B*	W/W1	F01^^	632	N/A	574	N/A	510	N/A	448	N/A	388	N/A	332	277	234	35-65
		F02^	727	48	677	51	623	54	565	60	510	65	455	403	351	
		F03	878	41	839	42	797	45	751	47	701	51	653	607	561	
		F04	948	38	910	39	870	41	828	43	785	45	739	693	652	
DC96SN0603B*	W/W1	F01^^	771	N/A	698	N/A	632	N/A	560	N/A	491	N/A	428	372	307	35-65
		F02^	1197	45	1150	46	1102	48	1057	50	1014	53	968	926	877	
		F03	1309	41	1264	42	1224	44	1180	45	1141	47	1098	1058	1018	
		F04	1138	47	1091	49	1043	51	993	54	949	56	901	853	805	
DC96SN0804C*	W/W1	F01^^	873	N/A	778	N/A	682	N/A	630	N/A	578	N/A	490	419	347	40-70
		F02^	1442	49	1386	51	1335	53	1280	56	1221	58	1157	1110	1054	
		F03	1643	43	1588	45	1534	46	1478	48	1415	50	1357	1299	1246	
		F04	1600	44	1555	46	1505	47	1460	49	1412	50	1364	1309	1260	
DC96SN1005C*	W/W1	F01^^	1176	N/A	1107	N/A	1037	N/A	969	N/A	891	N/A	825	753	692	40-70
		F02^	1773	42	1721	43	1671	44	1621	46	1571	47	1521	1470	1421	
		F03^^	1709	43	1658	45	1607	46	1556	48	1503	49	1451	1399	1349	
		F04	1651	45	1597	46	1542	48	1491	50	1437	52	1384	1332	1278	
DC96SN1205D*	W/W1	F01^^	1187	N/A	1101	N/A	1013	N/A	931	N/A	847	N/A	764	677	604	45-75
		F02^	1973	45	1916	46	1864	48	1810	49	1756	51	1702	1650	1590	
		F03	1918	46	1859	48	1807	49	1748	51	1696	52	1643	1591	1531	
		F04	1835	48	1776	50	1720	52	1657	54	1602	55	1544	1483	1428	

NOTE:
^ DEFAULT & RECOMMENDED
^^ NOT RECOMMENDED FOR HEATING

LOW STAGE COOLING AIFLOW

MODEL	THERMOSTAT CALL	TAP #	EXTERNAL STATIC PRESSURE, (INCHES WATER COLUMN)							
			0.1	0.2	0.3	0.4	0.5	0.6	0.7	0.8
			CFM	CFM	CFM	CFM	CFM	CFM	CFM	CFM
DM92SN0403A*	Y/Y1	F01	610	559	513	467	419	368	316	285
		F02	925	887	852	818	787	754	720	685
		F03	846	808	772	737	703	667	630	594
		F04^	781	739	701	663	625	586	547	508
		F05	1038	1003	970	940	909	879	849	820
		F06	1106	1072	1041	1011	981	953	926	898
		F07	1215	1180	1151	1121	1095	1066	1043	1017
		F08	1238	1210	1180	1153	1126	1099	1073	1047
		F09	1319	1299	1273	1246	1220	1194	1169	1146
DM92SN0603B*	Y/Y1	F01	723	663	604	539	476	404	347	291
		F02	1052	1010	962	920	875	829	785	740
		F03	1125	1084	1042	1003	964	918	875	834
		F04^	1206	1166	1129	1091	1054	1012	977	947
		F05	901	854	809	758	703	653	604	552
		F06	948	900	855	810	762	708	662	608
		F07	1273	1237	1206	1169	1128	1094	1057	1020
		F08	1365	1321	1292	1251	1219	1184	1152	1120
		F09	1426	1387	1360	1326	1292	1257	1226	1193
DM92SN0803B*	Y/Y1	F01	718	662	611	551	486	419	358	300
		F02	1373	1341	1307	1279	1253	1226	1197	1172
		F03	1309	1265	1232	1192	1162	1129	1093	1057
		F04^	1233	1194	1165	1131	1097	1070	1039	1008
		F05	874	828	791	750	703	655	602	547
		F06	950	908	865	826	786	739	689	638
		F07	1097	1056	1019	988	952	921	880	842
		F08	1166	1127	1092	1060	1027	994	960	926
		F09	1407	1373	1338	1308	1282	1253	1229	1203
DM92SN0804C*	Y/Y1	F01	804	740	670	586	501	407	347	N/A
		F02	1422	1375	1332	1288	1245	1200	1154	1108
		F03	1502	1455	1410	1365	1322	1278	1237	1195
		F04^	1567	1519	1476	1441	1402	1360	1319	1278
		F05	1347	1299	1253	1205	1157	1111	1063	1013
		F06	1692	1648	1609	1567	1529	1490	1451	1413
		F07	1772	1728	1689	1652	1614	1574	1534	1498
		F08	1793	1753	1720	1679	1643	1604	1562	1524
		F09	1875	1833	1797	1759	1727	1686	1652	1616
DM92SN0805C*	Y/Y1	F01	869	782	684	575	482	395	331	122
		F02	1823	1776	1720	1679	1642	1597	1553	1504
		F03	1778	1729	1690	1648	1605	1558	1497	1449
		F04^	1722	1660	1609	1553	1507	1455	1402	1350
		F05	1498	1442	1388	1332	1278	1215	1154	1090
		F06	1634	1583	1536	1489	1440	1387	1330	1275
		F07	1925	1879	1836	1795	1752	1711	1664	1621
		F08	1993	1941	1899	1852	1813	1778	1741	1693
		F09	2216	2172	2131	2087	2046	2011	1973	1935

LOW STAGE COOLING AIFLOW

MODEL	THERMOSTAT CALL	TAP #	EXTERNAL STATIC PRESSURE, (INCHES WATER COLUMN)							
			0.1	0.2	0.3	0.4	0.5	0.6	0.7	0.8
			CFM	CFM	CFM	CFM	CFM	CFM	CFM	CFM
DM92SN1004C*	Y/Y1	F01	809	740	669	603	536	449	377	319
		F02	1754	1707	1673	1640	1604	1568	1538	1509
		F03	1648	1620	1586	1552	1515	1480	1449	1412
		F04^	1558	1517	1479	1441	1403	1366	1330	1295
		F05	1303	1255	1210	1167	1125	1081	1041	999
		F06	1406	1362	1321	1281	1240	1197	1157	1118
		F07	1445	1403	1363	1324	1287	1247	1208	1167
		F08	1778	1743	1700	1669	1634	1600	1568	1542
		F09	1824	1785	1747	1714	1680	1647	1617	1585
DM92SN1005C*	Y/Y1	F01	906	813	717	613	519	439	368	N/A
		F02	1871	1818	1769	1720	1667	1614	1565	1511
		F03	1831	1782	1729	1679	1624	1571	1520	1465
		F04^	1653	1596	1538	1480	1422	1362	1306	1247
		F05	1496	1437	1376	1315	1250	1189	1126	1056
		F06	1640	1587	1527	1471	1414	1357	1294	1235
		F07	1955	1937	1909	1860	1813	1765	1712	1662
		F08	2086	2039	1991	1944	1896	1855	1810	1763
		F09	2222	2178	2133	2088	2043	1998	1954	1910
DM92SN1205D*	Y/Y1	F01	1056	962	866	772	666	574	501	429
		F02	2096	2050	2005	1948	1899	1848	1800	1755
		F03	2023	1973	1927	1877	1829	1781	1731	1680
		F04^	1946	1900	1848	1795	1741	1689	1637	1584
		F05	1231	1151	1078	992	913	812	725	651
		F06	1503	1440	1382	1318	1251	1179	1108	1039
		F07	1704	1646	1586	1532	1473	1412	1346	1284
		F08	1831	1775	1720	1668	1610	1560	1511	1457
		F09	2222	2173	2125	2078	2029	1980	1933	1884

NOTE:
^ Default speed

HIGH STAGE COOLING AIFLOW

MODEL	THERMOSTAT CALL	TAP #	EXTERNAL STATIC PRESSURE, (INCHES WATER COLUMN)							
			0.1	0.2	0.3	0.4	0.5	0.6	0.7	0.8
			CFM	CFM	CFM	CFM	CFM	CFM	CFM	CFM
DM92SN0403A*	Y2	F01	610	559	513	467	419	368	316	285
		F02	925	887	852	818	787	754	720	685
		F03	846	808	772	737	703	667	630	594
		F04	781	739	701	663	625	586	547	508
		F05^	1038	1003	970	940	909	879	849	820
		F06	1106	1072	1041	1011	981	953	926	898
		F07	1215	1180	1151	1121	1095	1066	1043	1017
		F08	1238	1210	1180	1153	1126	1099	1073	1047
		F09	1319	1299	1273	1246	1220	1194	1169	1146
DM92SN0603B*	Y2	F01	723	663	604	539	476	404	347	291
		F02	1052	1010	962	920	875	829	785	740
		F03	1125	1084	1042	1003	964	918	875	834
		F04	1206	1166	1129	1091	1054	1012	977	947
		F05^	901	854	809	758	703	653	604	552
		F06	948	900	855	810	762	708	662	608
		F07	1273	1237	1206	1169	1128	1094	1057	1020
		F08	1365	1321	1292	1251	1219	1184	1152	1120
		F09	1426	1387	1360	1326	1292	1257	1226	1193
DM92SN0803B*	Y2	F01	718	662	611	551	486	419	358	300
		F02	1373	1341	1307	1279	1253	1226	1197	1172
		F03	1309	1265	1232	1192	1162	1129	1093	1057
		F04	1233	1194	1165	1131	1097	1070	1039	1008
		F05^	874	828	791	750	703	655	602	547
		F06	950	908	865	826	786	739	689	638
		F07	1097	1056	1019	988	952	921	880	842
		F08	1166	1127	1092	1060	1027	994	960	926
		F09	1407	1373	1338	1308	1282	1253	1229	1203
DM92SN0804C*	Y2	F01	804	740	670	586	501	407	347	N/A
		F02	1422	1375	1332	1288	1245	1200	1154	1108
		F03	1502	1455	1410	1365	1322	1278	1237	1195
		F04	1567	1519	1476	1441	1402	1360	1319	1278
		F05^	1347	1299	1253	1205	1157	1111	1063	1013
		F06	1692	1648	1609	1567	1529	1490	1451	1413
		F07	1772	1728	1689	1652	1614	1574	1534	1498
		F08	1793	1753	1720	1679	1643	1604	1562	1524
		F09	1875	1833	1797	1759	1727	1686	1652	1616
DM92SN0805C*	Y2	F01	869	782	684	575	482	395	331	122
		F02	1823	1776	1720	1679	1642	1597	1553	1504
		F03	1778	1729	1690	1648	1605	1558	1497	1449
		F04	1722	1660	1609	1553	1507	1455	1402	1350
		F05^	1498	1442	1388	1332	1278	1215	1154	1090
		F06	1634	1583	1536	1489	1440	1387	1330	1275
		F07	1925	1879	1836	1795	1752	1711	1664	1621
		F08	1993	1941	1899	1852	1813	1778	1741	1693
		F09	2216	2172	2131	2087	2046	2011	1973	1935

HIGH STAGE COOLING AIFLOW

MODEL	THERMOSTAT CALL	TAP #	EXTERNAL STATIC PRESSURE, (INCHES WATER COLUMN)							
			0.1	0.2	0.3	0.4	0.5	0.6	0.7	0.8
			CFM	CFM	CFM	CFM	CFM	CFM	CFM	CFM
DM92SN1004C*	Y2	F01	809	740	669	603	536	449	377	319
		F02	1754	1707	1673	1640	1604	1568	1538	1509
		F03	1648	1620	1586	1552	1515	1480	1449	1412
		F04	1558	1517	1479	1441	1403	1366	1330	1295
		F05^	1303	1255	1210	1167	1125	1081	1041	999
		F06	1406	1362	1321	1281	1240	1197	1157	1118
		F07	1445	1403	1363	1324	1287	1247	1208	1167
		F08	1778	1743	1700	1669	1634	1600	1568	1542
		F09	1824	1785	1747	1714	1680	1647	1617	1585
DM92SN1005C*	Y2	F01	906	813	717	613	519	439	368	N/A
		F02	1871	1818	1769	1720	1667	1614	1565	1511
		F03	1831	1782	1729	1679	1624	1571	1520	1465
		F04	1653	1596	1538	1480	1422	1362	1306	1247
		F05^	1496	1437	1376	1315	1250	1189	1126	1056
		F06	1640	1587	1527	1471	1414	1357	1294	1235
		F07	1955	1937	1909	1860	1813	1765	1712	1662
		F08	2086	2039	1991	1944	1896	1855	1810	1763
		F09	2222	2178	2133	2088	2043	1998	1954	1910
DM92SN1205D*	Y2	F01	1056	962	866	772	666	574	501	429
		F02	2096	2050	2005	1948	1899	1848	1800	1755
		F03	2023	1973	1927	1877	1829	1781	1731	1680
		F04	1946	1900	1848	1795	1741	1689	1637	1584
		F05^	1231	1151	1078	992	913	812	725	651
		F06	1503	1440	1382	1318	1251	1179	1108	1039
		F07	1704	1646	1586	1532	1473	1412	1346	1284
		F08	1831	1775	1720	1668	1610	1560	1511	1457
		F09	2222	2173	2125	2078	2029	1980	1933	1884

NOTE:
^ Default speed

CIRCULATION AIRFLOW

MODEL	THERMOSTAT CALL	TAP #	EXTERNAL STATIC PRESSURE, (INCHES WATER COLUMN)							
			0.1	0.2	0.3	0.4	0.5	0.6	0.7	0.8
			CFM	CFM	CFM	CFM	CFM	CFM	CFM	CFM
DM92SN0403A*	G	F01	610	559	513	467	419	368	316	285
		F02	925	887	852	818	787	754	720	685
		F03	846	808	772	737	703	667	630	594
		F04	781	739	701	663	625	586	547	508
		F05	1038	1003	970	940	909	879	849	820
		F06	1106	1072	1041	1011	981	953	926	898
		F07	1215	1180	1151	1121	1095	1066	1043	1017
		F08	1238	1210	1180	1153	1126	1099	1073	1047
		F09	1319	1299	1273	1246	1220	1194	1169	1146
DM92SN0603B*	G	F01	723	663	604	539	476	404	347	291
		F02	1052	1010	962	920	875	829	785	740
		F03	1125	1084	1042	1003	964	918	875	834
		F04	1206	1166	1129	1091	1054	1012	977	947
		F05	901	854	809	758	703	653	604	552
		F06	948	900	855	810	762	708	662	608
		F07	1273	1237	1206	1169	1128	1094	1057	1020
		F08	1365	1321	1292	1251	1219	1184	1152	1120
		F09	1426	1387	1360	1326	1292	1257	1226	1193
DM92SN0803B*	G	F01	718	662	611	551	486	419	358	300
		F02	1373	1341	1307	1279	1253	1226	1197	1172
		F03	1309	1265	1232	1192	1162	1129	1093	1057
		F04	1233	1194	1165	1131	1097	1070	1039	1008
		F05	874	828	791	750	703	655	602	547
		F06	950	908	865	826	786	739	689	638
		F07	1097	1056	1019	988	952	921	880	842
		F08	1166	1127	1092	1060	1027	994	960	926
		F09	1407	1373	1338	1308	1282	1253	1229	1203
DM92SN0804C*	G	F01	804	740	670	586	501	407	347	N/A
		F02	1422	1375	1332	1288	1245	1200	1154	1108
		F03	1502	1455	1410	1365	1322	1278	1237	1195
		F04	1567	1519	1476	1441	1402	1360	1319	1278
		F05	1347	1299	1253	1205	1157	1111	1063	1013
		F06	1692	1648	1609	1567	1529	1490	1451	1413
		F07	1772	1728	1689	1652	1614	1574	1534	1498
		F08	1793	1753	1720	1679	1643	1604	1562	1524
		F09	1875	1833	1797	1759	1727	1686	1652	1616
DM92SN0805C*	G	F01	869	782	684	575	482	395	331	122
		F02	1823	1776	1720	1679	1642	1597	1553	1504
		F03	1778	1729	1690	1648	1605	1558	1497	1449
		F04	1722	1660	1609	1553	1507	1455	1402	1350
		F05	1498	1442	1388	1332	1278	1215	1154	1090
		F06	1634	1583	1536	1489	1440	1387	1330	1275
		F07	1925	1879	1836	1795	1752	1711	1664	1621
		F08	1993	1941	1899	1852	1813	1778	1741	1693
		F09	2216	2172	2131	2087	2046	2011	1973	1935

CIRCULATION AIRFLOW

MODEL	THERMOSTAT CALL	TAP #	EXTERNAL STATIC PRESSURE, (INCHES WATER COLUMN)							
			0.1	0.2	0.3	0.4	0.5	0.6	0.7	0.8
			CFM	CFM	CFM	CFM	CFM	CFM	CFM	CFM
DM92SN1004C*	G	F01	809	740	669	603	536	449	377	319
		F02	1754	1707	1673	1640	1604	1568	1538	1509
		F03	1648	1620	1586	1552	1515	1480	1449	1412
		F04	1558	1517	1479	1441	1403	1366	1330	1295
		F05	1303	1255	1210	1167	1125	1081	1041	999
		F06	1406	1362	1321	1281	1240	1197	1157	1118
		F07	1445	1403	1363	1324	1287	1247	1208	1167
		F08	1778	1743	1700	1669	1634	1600	1568	1542
		F09	1824	1785	1747	1714	1680	1647	1617	1585
DM92SN1005C*	G	F01	906	813	717	613	519	439	368	N/A
		F02	1871	1818	1769	1720	1667	1614	1565	1511
		F03	1831	1782	1729	1679	1624	1571	1520	1465
		F04	1653	1596	1538	1480	1422	1362	1306	1247
		F05	1496	1437	1376	1315	1250	1189	1126	1056
		F06	1640	1587	1527	1471	1414	1357	1294	1235
		F07	1955	1937	1909	1860	1813	1765	1712	1662
		F08	2086	2039	1991	1944	1896	1855	1810	1763
		F09	2222	2178	2133	2088	2043	1998	1954	1910
DM92SN1205D*	G	F01	1056	962	866	772	666	574	501	429
		F02	2096	2050	2005	1948	1899	1848	1800	1755
		F03	2023	1973	1927	1877	1829	1781	1731	1680
		F04	1946	1900	1848	1795	1741	1689	1637	1584
		F05	1231	1151	1078	992	913	812	725	651
		F06	1503	1440	1382	1318	1251	1179	1108	1039
		F07	1704	1646	1586	1532	1473	1412	1346	1284
		F08	1831	1775	1720	1668	1610	1560	1511	1457
		F09	2222	2173	2125	2078	2029	1980	1933	1884

HEATING AIFLOW

MODEL	THERMOSTAT CALL	TAP #	EXTERNAL STATIC PRESSURE, (INCHES WATER COLUMN)													TEMP RANGE
			0.1		0.2		0.3		0.4		0.5		0.6	0.7	0.8	
			CFM	RISE	CFM	RISE	CFM	RISE	CFM	RISE	CFM	RISE	CFM	CFM	CFM	
DM92SN0403A*	W/W1	F01^^	610	56	559	N/A	513	N/A	467	N/A	419	N/A	368	316	285	30-60
		F02^	925	37	887	38	852	40	818	42	787	43	754	720	685	
		F03	846	40	808	42	772	44	737	46	703	49	667	630	594	
		F04	781	44	739	46	701	49	663	51	625	55	586	547	508	
DM92SN0603B*	W/W1	F01^^	723	N/A	663	N/A	604	N/A	539	N/A	476	N/A	404	347	291	35-65
		F02^	1052	49	1010	51	962	53	920	56	875	58	829	785	740	
		F03	1125	45	1084	47	1042	49	1003	51	964	53	918	875	834	
		F04	1206	42	1166	44	1129	45	1091	47	1054	48	1012	977	947	
DM92SN0803B*	W/W1	F01^^	718	N/A	662	N/A	611	N/A	551	N/A	486	N/A	419	358	300	35-65
		F02^	1373	50	1341	51	1307	52	1279	53	1253	54	1226	1197	1172	
		F03	1309	52	1265	54	1232	55	1192	57	1162	59	1129	1093	1057	
		F04	1233	55	1194	57	1165	59	1131	60	1097	62	1070	1039	1008	
DM92SN0804C*	W/W1	F01^^	804	N/A	740	N/A	670	N/A	586	N/A	501	N/A	407	347	N/A	35-65
		F02^	1422	48	1375	50	1332	51	1288	53	1245	55	1200	1154	1108	
		F03	1502	45	1455	47	1410	48	1365	50	1322	52	1278	1237	1195	
		F04	1567	44	1519	45	1476	46	1441	47	1402	49	1360	1319	1278	
DM92SN0805C*	W/W1	F01^^	869	N/A	782	N/A	684	N/A	575	N/A	482	N/A	395	331	122	25-55
		F02^	1823	37	1776	38	1720	40	1679	41	1642	41	1597	1553	1504	
		F03	1778	38	1729	39	1690	40	1648	41	1605	42	1558	1497	1449	
		F04	1722	40	1660	41	1609	42	1553	44	1507	45	1455	1402	1350	
DM92SN1004C*	W/W1	F01^^	809	N/A	740	N/A	669	N/A	603	N/A	536	N/A	449	377	319	35-65
		F02^	1754	49	1707	50	1673	51	1640	52	1604	53	1568	1538	1509	
		F03	1648	52	1620	53	1586	54	1552	55	1515	56	1480	1449	1412	
		F04	1558	55	1517	56	1479	58	1441	59	1403	61	1366	1330	1295	
DM92SN1005C*	W/W1	F01^^	906	N/A	813	N/A	717	N/A	613	N/A	519	N/A	439	368	N/A	35-65
		F02^	1871	46	1818	47	1769	48	1720	50	1667	51	1614	1565	1511	
		F03	1831	47	1782	48	1729	49	1679	51	1624	52	1571	1520	1465	
		F04^^	1653	52	1596	53	1538	55	1480	58	1422	60	1362	1306	1247	
DM92SN1205D*	W/W1	F01^^	1056	N/A	962	N/A	866	N/A	772	N/A	666	N/A	574	501	429	35-65
		F02^	2096	49	2050	50	2005	51	1948	52	1899	54	1848	1800	1755	
		F03	2023	51	1973	52	1927	53	1877	54	1829	56	1781	1731	1680	
		F04^^	1946	53	1900	54	1848	55	1795	57	1741	59	1689	1637	1584	

NOTE:
^ DEFAULT & RECOMMENDED
^^ NOT RECOMMENDED FOR HEATING

LOW STAGE COOLING AIFLOW

MODEL	THERMOSTAT CALL	TAP #	EXTERNAL STATIC PRESSURE, (INCHES WATER COLUMN)							
			0.1	0.2	0.3	0.4	0.5	0.6	0.7	0.8
			CFM	CFM	CFM	CFM	CFM	CFM	CFM	CFM
DM96SN0403A*	Y/Y1	F01	705	661	617	564	509	455	405	362
		F02	1079	1055	1027	994	965	935	906	863
		F03	915	881	846	814	780	737	695	652
		F04^	887	855	823	790	751	705	666	608
		F05	1135	1106	1078	1049	1021	994	965	933
		F06	1189	1163	1138	1111	1085	1059	1032	1001
		F07	1266	1243	1218	1197	1172	1148	1123	1099
		F08	1313	1288	1261	1239	1215	1189	1165	1143
		F09	1342	1324	1305	1280	1263	1239	1216	1193
DM96SN0603B*	Y/Y1	F01	758	696	636	572	512	460	412	354
		F02	1218	1178	1140	1100	1060	1016	977	937
		F03	1164	1123	1084	1042	1003	960	920	871
		F04^	1121	1083	1041	996	953	906	861	818
		F05	902	851	801	746	689	637	585	542
		F06	960	917	864	812	764	708	661	614
		F07	1273	1240	1207	1171	1128	1089	1051	1012
		F08	1335	1301	1266	1228	1192	1154	1118	1078
		F09	1427	1390	1362	1327	1297	1260	1224	1193
DM96SN0803B*	Y/Y1	F01	715	658	589	524	465	412	360	279
		F02	1415	1385	1355	1322	1291	1255	1219	1186
		F03	1388	1360	1325	1291	1259	1223	1191	1157
		F04^	1290	1252	1215	1182	1143	1107	1071	1032
		F05	916	867	817	767	710	657	608	563
		F06	985	940	892	842	797	746	693	649
		F07	1118	1078	1037	992	952	910	863	822
		F08	1191	1153	1114	1074	1034	993	951	911
		F09	1471	1440	1409	1377	1347	1314	1283	1247
DM96SN0804C*	Y/Y1	F01	1019	952	878	796	706	619	542	485
		F02	1791	1743	1700	1663	1626	1583	1538	1489
		F03	1625	1559	1512	1468	1425	1370	1325	1271
		F04^	1537	1490	1447	1403	1354	1301	1247	1190
		F05	1289	1234	1180	1122	1058	991	917	840
		F06	1431	1375	1329	1283	1227	1169	1108	1043
		F07	1836	1784	1741	1703	1664	1628	1585	1537
		F08	1919	1890	1846	1807	1771	1735	1694	1650
		F09	1952	1921	1885	1843	1804	1769	1731	1691

LOW STAGE COOLING AIFLOW

MODEL	THERMOSTAT CALL	TAP #	EXTERNAL STATIC PRESSURE, (INCHES WATER COLUMN)							
			0.1	0.2	0.3	0.4	0.5	0.6	0.7	0.8
			CFM	CFM	CFM	CFM	CFM	CFM	CFM	CFM
DM96SN0805C*	Y/Y1	F01	1029	959	890	811	727	647	579	511
		F02	1814	1766	1722	1679	1637	1595	1555	1511
		F03	1893	1844	1803	1763	1723	1685	1641	1604
		F04^	1738	1680	1637	1596	1554	1510	1469	1420
		F05	1193	1135	1087	1016	986	950	880	805
		F06	1421	1369	1323	1272	1222	1168	1108	1045
		F07	1582	1536	1491	1445	1404	1358	1309	1255
		F08	1962	1919	1889	1851	1816	1780	1743	1702
		F09	2068	2024	1986	1947	1912	1873	1837	1797
DM96SN1005C*	Y/Y1	F01	1008	934	855	779	702	628	557	493
		F02	2026	1981	1929	1901	1858	1819	1773	1733
		F03	1921	1879	1840	1791	1751	1705	1656	1610
		F04^	1804	1755	1710	1664	1619	1574	1526	1479
		F05	1475	1421	1369	1314	1260	1207	1152	1097
		F06	1626	1578	1522	1475	1427	1353	1328	1283
		F07	1693	1639	1588	1542	1491	1437	1390	1340
		F08	1775	1723	1674	1629	1580	1529	1484	1435
		F09	2161	2122	2084	2048	2010	1973	1940	1914
DM96SN1205D*	Y/Y1	F01	1118	1035	952	860	750	663	590	519
		F02	2143	2095	2047	2002	1954	1891	1850	1802
		F03	2025	1977	1930	1897	1848	1798	1750	1703
		F04^	1906	1877	1828	1778	1726	1674	1622	1568
		F05	1220	1145	1070	995	952	907	811	725
		F06	1684	1620	1561	1499	1438	1378	1318	1259
		F07	1766	1712	1666	1612	1558	1506	1450	1395
		F08	1863	1807	1754	1698	1642	1587	1532	1476
		F09	2454	2396	2347	2296	2250	2202	2157	2113

NOTE:
^ Default Speed

HIGH STAGE COOLING AIFLOW

MODEL	THERMOSTAT CALL	TAP #	EXTERNAL STATIC PRESSURE, (INCHES WATER COLUMN)							
			0.1	0.2	0.3	0.4	0.5	0.6	0.7	0.8
			CFM	CFM	CFM	CFM	CFM	CFM	CFM	CFM
DM96SN0403A*	Y2	F01	705	661	617	564	509	455	405	362
		F02	1079	1055	1027	994	965	935	906	863
		F03	915	881	846	814	780	737	695	652
		F04	887	855	823	790	751	705	666	608
		F05^	1135	1106	1078	1049	1021	994	965	933
		F06	1189	1163	1138	1111	1085	1059	1032	1001
		F07	1266	1243	1218	1197	1172	1148	1123	1099
		F08	1313	1288	1261	1239	1215	1189	1165	1143
		F09	1342	1324	1305	1280	1263	1239	1216	1193
DM96SN0603B*	Y2	F01	758	696	636	572	512	460	412	354
		F02	1218	1178	1140	1100	1060	1016	977	937
		F03	1164	1123	1084	1042	1003	960	920	871
		F04	1121	1083	1041	996	953	906	861	818
		F05^	902	851	801	746	689	637	585	542
		F06	960	917	864	812	764	708	661	614
		F07	1273	1240	1207	1171	1128	1089	1051	1012
		F08	1335	1301	1266	1228	1192	1154	1118	1078
		F09	1427	1390	1362	1327	1297	1260	1224	1193
DM96SN0803B*	Y2	F01	715	658	589	524	465	412	360	279
		F02	1415	1385	1355	1322	1291	1255	1219	1186
		F03	1388	1360	1325	1291	1259	1223	1191	1157
		F04	1290	1252	1215	1182	1143	1107	1071	1032
		F05^	916	867	817	767	710	657	608	563
		F06	985	940	892	842	797	746	693	649
		F07	1118	1078	1037	992	952	910	863	822
		F08	1191	1153	1114	1074	1034	993	951	911
		F09	1471	1440	1409	1377	1347	1314	1283	1247
DM96SN0804C*	Y2	F01	1019	952	878	796	706	619	542	485
		F02	1791	1743	1700	1663	1626	1583	1538	1489
		F03	1625	1559	1512	1468	1425	1370	1325	1271
		F04	1537	1490	1447	1403	1354	1301	1247	1190
		F05^	1289	1234	1180	1122	1058	991	917	840
		F06	1431	1375	1329	1283	1227	1169	1108	1043
		F07	1836	1784	1741	1703	1664	1628	1585	1537
		F08	1919	1890	1846	1807	1771	1735	1694	1650
		F09	1952	1921	1885	1843	1804	1769	1731	1691

HIGH STAGE COOLING AIFLOW

MODEL	THERMOSTAT CALL	TAP #	EXTERNAL STATIC PRESSURE, (INCHES WATER COLUMN)							
			0.1	0.2	0.3	0.4	0.5	0.6	0.7	0.8
			CFM	CFM	CFM	CFM	CFM	CFM	CFM	CFM
DM96SN0805C*	Y2	F01	1029	959	890	811	727	647	579	511
		F02	1814	1766	1722	1679	1637	1595	1555	1511
		F03	1893	1844	1803	1763	1723	1685	1641	1604
		F04	1738	1680	1637	1596	1554	1510	1469	1420
		F05^	1193	1135	1087	1016	986	950	880	805
		F06	1421	1369	1323	1272	1222	1168	1108	1045
		F07	1582	1536	1491	1445	1404	1358	1309	1255
		F08	1962	1919	1889	1851	1816	1780	1743	1702
		F09	2068	2024	1986	1947	1912	1873	1837	1797
DM96SN1005C*	Y2	F01	1008	934	855	779	702	628	557	493
		F02	2026	1981	1929	1901	1858	1819	1773	1733
		F03	1921	1879	1840	1791	1751	1705	1656	1610
		F04	1804	1755	1710	1664	1619	1574	1526	1479
		F05^	1475	1421	1369	1314	1260	1207	1152	1097
		F06	1626	1578	1522	1475	1427	1353	1328	1283
		F07	1693	1639	1588	1542	1491	1437	1390	1340
		F08	1775	1723	1674	1629	1580	1529	1484	1435
		F09	2161	2122	2084	2048	2010	1973	1940	1914
DM96SN1205D*	Y2	F01	1118	1035	952	860	750	663	590	519
		F02	2143	2095	2047	2002	1954	1891	1850	1802
		F03	2025	1977	1930	1897	1848	1798	1750	1703
		F04	1906	1877	1828	1778	1726	1674	1622	1568
		F05^	1220	1145	1070	995	952	907	811	725
		F06	1684	1620	1561	1499	1438	1378	1318	1259
		F07	1766	1712	1666	1612	1558	1506	1450	1395
		F08	1863	1807	1754	1698	1642	1587	1532	1476
		F09	2454	2396	2347	2296	2250	2202	2157	2113

NOTE:
^ Default Speed

CIRCULATION AIRFLOW

MODEL	THERMOSTAT CALL	TAP #	EXTERNAL STATIC PRESSURE, (INCHES WATER COLUMN)							
			0.1	0.2	0.3	0.4	0.5	0.6	0.7	0.8
			CFM	CFM	CFM	CFM	CFM	CFM	CFM	CFM
DM96SN0403A*	G	F01	705	661	617	564	509	455	405	362
		F02	1079	1055	1027	994	965	935	906	863
		F03	915	881	846	814	780	737	695	652
		F04	887	855	823	790	751	705	666	608
		F05	1135	1106	1078	1049	1021	994	965	933
		F06	1189	1163	1138	1111	1085	1059	1032	1001
		F07	1266	1243	1218	1197	1172	1148	1123	1099
		F08	1313	1288	1261	1239	1215	1189	1165	1143
		F09	1342	1324	1305	1280	1263	1239	1216	1193
DM96SN0603B*	G	F01	758	696	636	572	512	460	412	354
		F02	1218	1178	1140	1100	1060	1016	977	937
		F03	1164	1123	1084	1042	1003	960	920	871
		F04	1121	1083	1041	996	953	906	861	818
		F05	902	851	801	746	689	637	585	542
		F06	960	917	864	812	764	708	661	614
		F07	1273	1240	1207	1171	1128	1089	1051	1012
		F08	1335	1301	1266	1228	1192	1154	1118	1078
		F09	1427	1390	1362	1327	1297	1260	1224	1193
DM96SN0803B*	G	F01	715	658	589	524	465	412	360	279
		F02	1415	1385	1355	1322	1291	1255	1219	1186
		F03	1388	1360	1325	1291	1259	1223	1191	1157
		F04	1290	1252	1215	1182	1143	1107	1071	1032
		F05	916	867	817	767	710	657	608	563
		F06	985	940	892	842	797	746	693	649
		F07	1118	1078	1037	992	952	910	863	822
		F08	1191	1153	1114	1074	1034	993	951	911
		F09	1471	1440	1409	1377	1347	1314	1283	1247
DM96SN0804C*	G	F01	1019	952	878	796	706	619	542	485
		F02	1791	1743	1700	1663	1626	1583	1538	1489
		F03	1625	1559	1512	1468	1425	1370	1325	1271
		F04	1537	1490	1447	1403	1354	1301	1247	1190
		F05	1289	1234	1180	1122	1058	991	917	840
		F06	1431	1375	1329	1283	1227	1169	1108	1043
		F07	1836	1784	1741	1703	1664	1628	1585	1537
		F08	1919	1890	1846	1807	1771	1735	1694	1650
		F09	1952	1921	1885	1843	1804	1769	1731	1691

CIRCULATION AIRFLOW

MODEL	THERMOSTAT CALL	TAP #	EXTERNAL STATIC PRESSURE, (INCHES WATER COLUMN)							
			0.1	0.2	0.3	0.4	0.5	0.6	0.7	0.8
			CFM	CFM	CFM	CFM	CFM	CFM	CFM	CFM
DM96SN0805C*	G	F01	1029	959	890	811	727	647	579	511
		F02	1814	1766	1722	1679	1637	1595	1555	1511
		F03	1893	1844	1803	1763	1723	1685	1641	1604
		F04	1738	1680	1637	1596	1554	1510	1469	1420
		F05	1193	1135	1087	1016	986	950	880	805
		F06	1421	1369	1323	1272	1222	1168	1108	1045
		F07	1582	1536	1491	1445	1404	1358	1309	1255
		F08	1962	1919	1889	1851	1816	1780	1743	1702
		F09	2068	2024	1986	1947	1912	1873	1837	1797
DM96SN1005C*	G	F01	1008	934	855	779	702	628	557	493
		F02	2026	1981	1929	1901	1858	1819	1773	1733
		F03	1921	1879	1840	1791	1751	1705	1656	1610
		F04	1804	1755	1710	1664	1619	1574	1526	1479
		F05	1475	1421	1369	1314	1260	1207	1152	1097
		F06	1626	1578	1522	1475	1427	1353	1328	1283
		F07	1693	1639	1588	1542	1491	1437	1390	1340
		F08	1775	1723	1674	1629	1580	1529	1484	1435
		F09	2161	2122	2084	2048	2010	1973	1940	1914
DM96SN1205D*	G	F01	1118	1035	952	860	750	663	590	519
		F02	2143	2095	2047	2002	1954	1891	1850	1802
		F03	2025	1977	1930	1897	1848	1798	1750	1703
		F04	1906	1877	1828	1778	1726	1674	1622	1568
		F05	1220	1145	1070	995	952	907	811	725
		F06	1684	1620	1561	1499	1438	1378	1318	1259
		F07	1766	1712	1666	1612	1558	1506	1450	1395
		F08	1863	1807	1754	1698	1642	1587	1532	1476
		F09	2454	2396	2347	2296	2250	2202	2157	2113

HEATING AIFLOW

MODEL	THERMOSTAT CALL	TAP #	EXTERNAL STATIC PRESSURE, (INCHES WATER COLUMN)													TEMP RANGE
			0.1		0.2		0.3		0.4		0.5		0.6	0.7	0.8	
			CFM	RISE	CFM	RISE	CFM	RISE	CFM	RISE	CFM	RISE	CFM	CFM	CFM	
DM96SN0403A*	W/W1	F01^^	705	N/A	661	N/A	617	N/A	564	N/A	509	N/A	455	405	362	25-55
		F02^	1079	27	1055	28	1027	29	994	30	965	31	935	906	863	
		F03	915	32	881	34	846	35	814	36	780	38	737	695	652	
		F04	887	33	855	35	823	36	790	38	751	39	705	666	608	
DM96SN0603B*	W/W1	F01^^	758	N/A	696	N/A	636	N/A	572	N/A	512	N/A	460	412	354	35-65
		F02^	1218	37	1178	38	1140	39	1100	40	1060	42	1016	977	937	
		F03	1164	38	1123	40	1084	41	1042	43	1003	44	960	920	871	
		F04	1121	40	1083	41	1041	43	996	45	953	47	906	861	818	
DM96SN0803B*	W/W1	F01^^	715	N/A	658	N/A	589	N/A	524	N/A	465	N/A	412	360	279	35-65
		F02^	1415	42	1385	43	1355	44	1322	45	1291	46	1255	1219	1186	
		F03	1388	43	1360	44	1325	45	1291	46	1259	47	1223	1191	1157	
		F04	1290	46	1252	47	1215	49	1182	50	1143	52	1107	1071	1032	
DM96SN0804C*	W/W1	F01^^	1019	N/A	952	N/A	878	N/A	796	N/A	706	N/A	619	542	485	25-55
		F02^	1791	33	1743	34	1700	35	1663	36	1626	36	1583	1538	1489	
		F03	1625	36	1559	38	1512	39	1468	40	1425	42	1370	1325	1271	
		F04	1537	39	1490	40	1447	41	1403	42	1354	44	1301	1247	1190	
DM96SN0805C*	W/W1	F01^^	1029	N/A	959	N/A	890	N/A	811	N/A	727	N/A	647	579	511	25-55
		F02^	1814	33	1766	34	1722	34	1679	35	1637	36	1595	1555	1511	
		F03	1893	31	1844	32	1803	33	1763	34	1723	34	1685	1641	1604	
		F04	1738	34	1680	35	1637	36	1596	37	1554	38	1510	1469	1420	
DM96SN1005C*	W/W1	F01^^	1008	N/A	934	N/A	855	N/A	779	N/A	702	N/A	628	557	493	30-60
		F02^	2026	37	1981	37	1929	38	1901	39	1858	40	1819	1773	1733	
		F03	1921	39	1879	39	1840	40	1791	41	1751	42	1705	1656	1610	
		F04	1804	41	1755	42	1710	43	1664	45	1619	46	1574	1526	1479	
DM96SN1205D*	W/W1	F01^^	1118	N/A	1035	N/A	952	N/A	860	N/A	750	N/A	663	590	519	35-65
		F02^	2143	41	2095	42	2047	43	2002	44	1954	45	1891	1850	1802	
		F03	2025	44	1977	45	1930	46	1897	47	1848	48	1798	1750	1703	
		F04^^	1906	47	1877	47	1828	49	1778	50	1726	51	1674	1622	1568	

NOTE:
^ DEFAULT & RECOMMENDED
^^ NOT RECOMMENDED FOR HEATING

1 STAGE STATUS CODES

Menu Description	LED Display		Notes
	Main Menu	Option Menu	
Active Alaram menu	Err	Exx	(xx: code numbers)
Last 6 Faults	L6F	Exx	(xx: code numbers)
Code Release Number	Cr	CR Number	
Reset to Factory Default	rFd	yes, no	
Blower Speed for Continous Fan Mode	FSd	Fxx	(xx: Blower Speed Number F01, F02..)
Blower Speed for 1st Stage Compressor Mode	AC1	Fxx	(xx: Blower Speed Number F01, F02..)
Blower Speed for 2nd Stage Compressor Mode	AC2	Fxx	(xx: Blower Speed Number F01, F02..)
Cool On Delay	Cnd	Delay, Seconds	Default set at 7 Secs, Adjustments can be made in 7 Secs increments from 0 to 35 Secs
Cool Off Delay	CFd	Delay, Seconds	Default set at 65 Secs, Adjustments can be made in 5 Secs increments from 0 to 120 Secs
Blower Speed for Gas Heat Mode	GAF	Fxx	(xx: Blower Speed Number F01, F02..)
Gas Heat On Delay	Gnd	Delay, Seconds	Default set at 30 Secs, Adjustments can be made in 5 Secs increments from 5 to 30 Secs
Gas heat Off Delay	GFd	Delay, Seconds	Default set at 90 Secs, Adjustments can be made in 30 Secs increments from 30 to 180 Secs
Automatic Heat Staging - For Two Stage Control	AHS	no, 10, 20, 30, 60, AUt	Refer to Section " CHANGING HEATING MODE SETTING"

Mode	Main Menu
Idle	IdL
Continous Fan	FAn
Compressor Cooling, Low Stage	1AC
Compressor Cooling, High Stage	2AC
Gas heat - Single Stage Control	9H
OEM test Mode	EOL

1 STAGE TROUBLESHOOTING CODES

TROUBLESHOOTING CHART			
Symptom	**LED Status**	**Fault Description**	**Corrective Actions**
Normal operation	1 dL	Normal operation	None
Furnace fails to operate	EE0	Furnace lockout due to an excessive number of ignition “retries” (3 total) Failure to establish flame Loss of flame after establishment	Locate and correct gas interruption Replace or realign igniter Check flame sense signal, clean sensor if coated or oxidized Check flue piping for blockage, proper length, elbows, and termination Verify proper induced draft blower performance
Furnace fails to operate	EE1	Pressure switch circuit is closed at start of heating cycle Pressure switch contacts sticking Short in pressure switch circuit wiring	Replace low stage pressure switch Repair short in wiring
Induced draft blower runs continuously with no furnace operation	EE2	Pressure switch circuit is not closed Pressure switch hose blocked pinched, or connected improperly Blocked flue and/or inlet air pipe, blocked drain system or weak induced draft blower Incorrect pressure switch set point or malfunctioning switch contacts Loose or improperly connected wiring	Inspect pressure switch hose, repair/replace if necessary Inspect flue piping for blockage, proper length, elbows, and termination Check induced draft blower performance, correct as necessary Check pressure switch operation, replace as needed Tighten or correct wiring connection
Circulator blower runs continuously No furnace operation	EE3	Primary limit circuit is open Insufficient conditioned air over the heat exchanger Blocked filters, restrictive ductwork, improper circulator blower speed, or failed circulator blower motor Loose or improperly connected wiring in high limit circuit	Check filters and ductwork for blockage Clean filters or remove obstruction Check circulator blower speed and performance Correct speed or replace blower motor if necessary Tighten or correct wiring connection
Induced draft blower and circulator blower runs continuously No furnace operation	EE4	Flame sensed with no call for heat Short to ground in flame sense circuit Lingering burner flame Slow closing gas valve	Correct short at flame sensor or in flame sensor wiring Check for lingering or lazy flame Verify proper operation of gas valve
No furnace operation	EE5	Open fuse Short in low voltage wiring	Replace fuse Locate and correct short in low voltage wiring

1 STAGE TROUBLESHOOTING CODES

TROUBLESHOOTING CHART			
Symptom	**LED Status**	**Fault Description**	**Corrective Actions**
Normal furnace operation	EE6	Flame sense micro amp signal is minimal Flame sensor is coated/oxidized Flame sensor incorrectly positioned in burner fame Lazy burner flame due to improper gas pressure or combustion air	Clean flame sensor if coated or oxidized Inspect for proper flame sensor alignment Compare current gas pressure to rating plate and adjust as needed
Furnace fails to operate	EEL	Problem with igniter circuit Improperly connected or shorted igniter Poor unit ground Igniter relay fault on integrated control module	Check and correct wiring from integrated control module to igniter Diagnose and replace shorted igniter as needed Verify and correct unit ground wiring if needed Check igniter output from control, replace if necessary
Furnace fails to operate	EEA	Polarity of 115 volt AC is reversed Poor unit ground	Correct polarity, check and correct wiring if necessary Verify proper ground, correct if necessary
Furnace fails to operate	EEb	Gas valve is not energized when it should be External Gas Valve Error	Check wiring in gas valve circuit Replace integrated control board
Furnace fails to operate	EEC	Gas valve is energized when it should not be Internal gas valve error	Check wiring in gas valve circuit Replace integrated control board
Furnace fails to operate. Integrated control module LED display provides no signal	None	No 115 power to furnace or no 24 volt power to integrated control module. Blown fuse or tripped circuit breaker Integrated control module is non- functional	Restore high voltage power to furnace and integrated control module. Correct condition which caused fuse to open, replace fuse Replace non-functional integrated control module.
Furnace fails to operate	E10	Grounding fault Poor neutral connection	Verify neutral wire connection to furnace & continuity to ground source
Furnace fails to operate	E11	Open roll out switch	Check for correct gas pressure Check for correct burner alignment Check for and correct burner restriction
Furnace fails to operate	EEn	Ignitor Open	Check for Ignitor wiring. Replace Damaged Ignitor
Furnace fails to operate	EEJ	Inducer relay Error	Replace integrated control board
Twinning feature not working	EEH	TWIN Error	Check for wiring connections. Replace integrated control board
Furnace fails to operate	EEE	Internal Faults or IRQ Loss in Control Board	Replace integrated control board

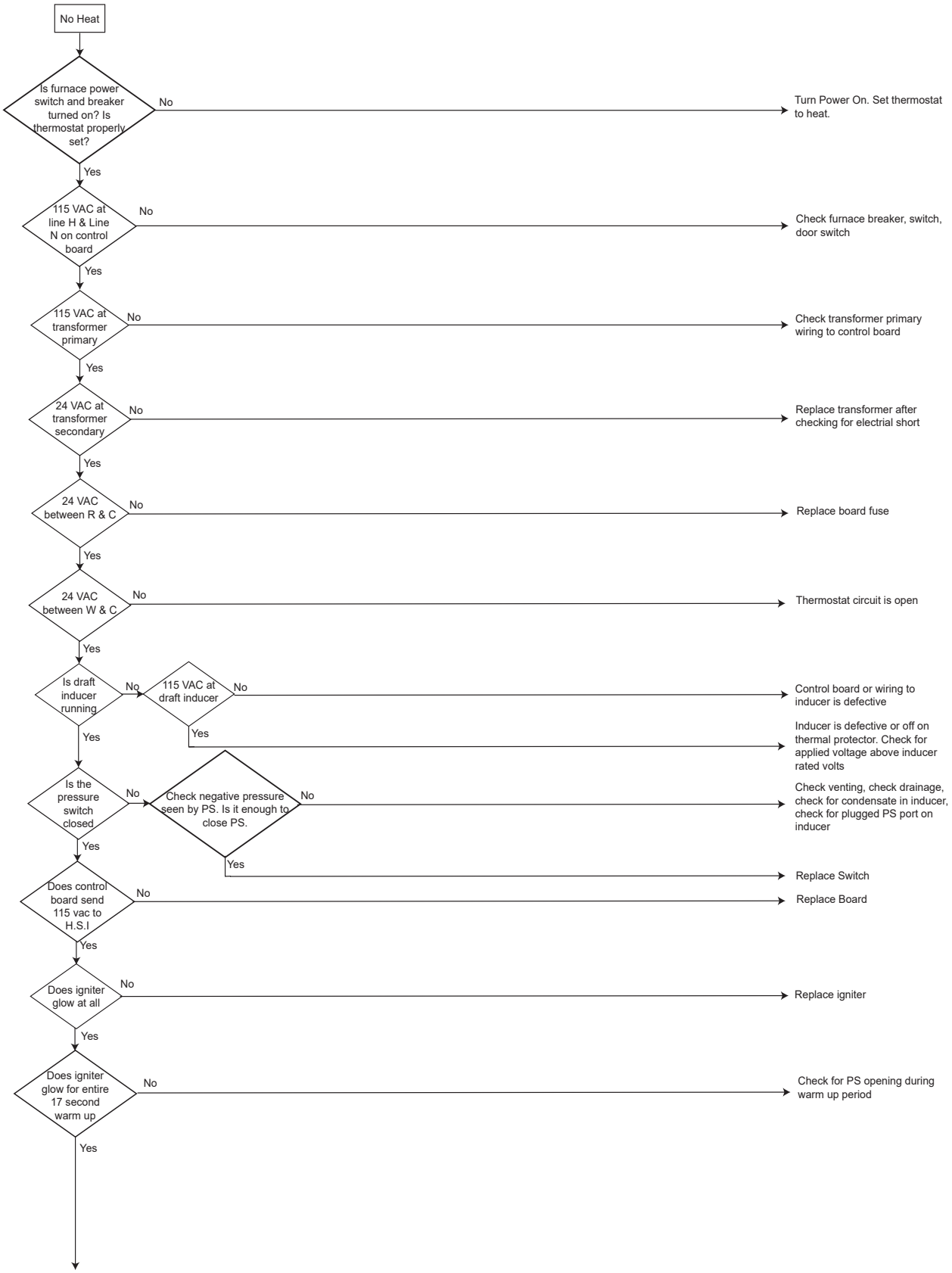
No Heat
Is furnace power switch and breaker turned on? Is thermostat properly set?
No
Turn Power On. Set thermostat to heat.
Yes
115 VAC at line H & Line N on control board
No
Check furnace breaker, switch, door switch
Yes
115 VAC at transformer primary
No
Check transformer primary wiring to control board
Yes
24 VAC at transformer secondary
No
Replace transformer after checking for electrial short
Yes
24 VAC between R & C
No
Replace board fuse
Yes
24 VAC between W & C
No
Thermostat circuit is open
Yes
Is draft inducer running
No
115 VAC at draft inducer
No
Control board or wiring to inducer is defective
Yes
Inducer is defective or off on thermal protector. Check for applied voltage above inducer rated volts
Yes
Is the pressure switch closed
No
Check negative pressure seen by PS. Is it enough to close PS.
No
Check venting, check drainage, check for condensate in inducer, check for plugged PS port on inducer
Yes
Replace Switch
Yes
Does control board send 115 vac to H.S.I
No
Replace Board
Yes
Does igniter glow at all
No
Replace igniter
Yes
Does igniter glow for entire 17 second warm up
No
Check for PS opening during warm up period
Yes

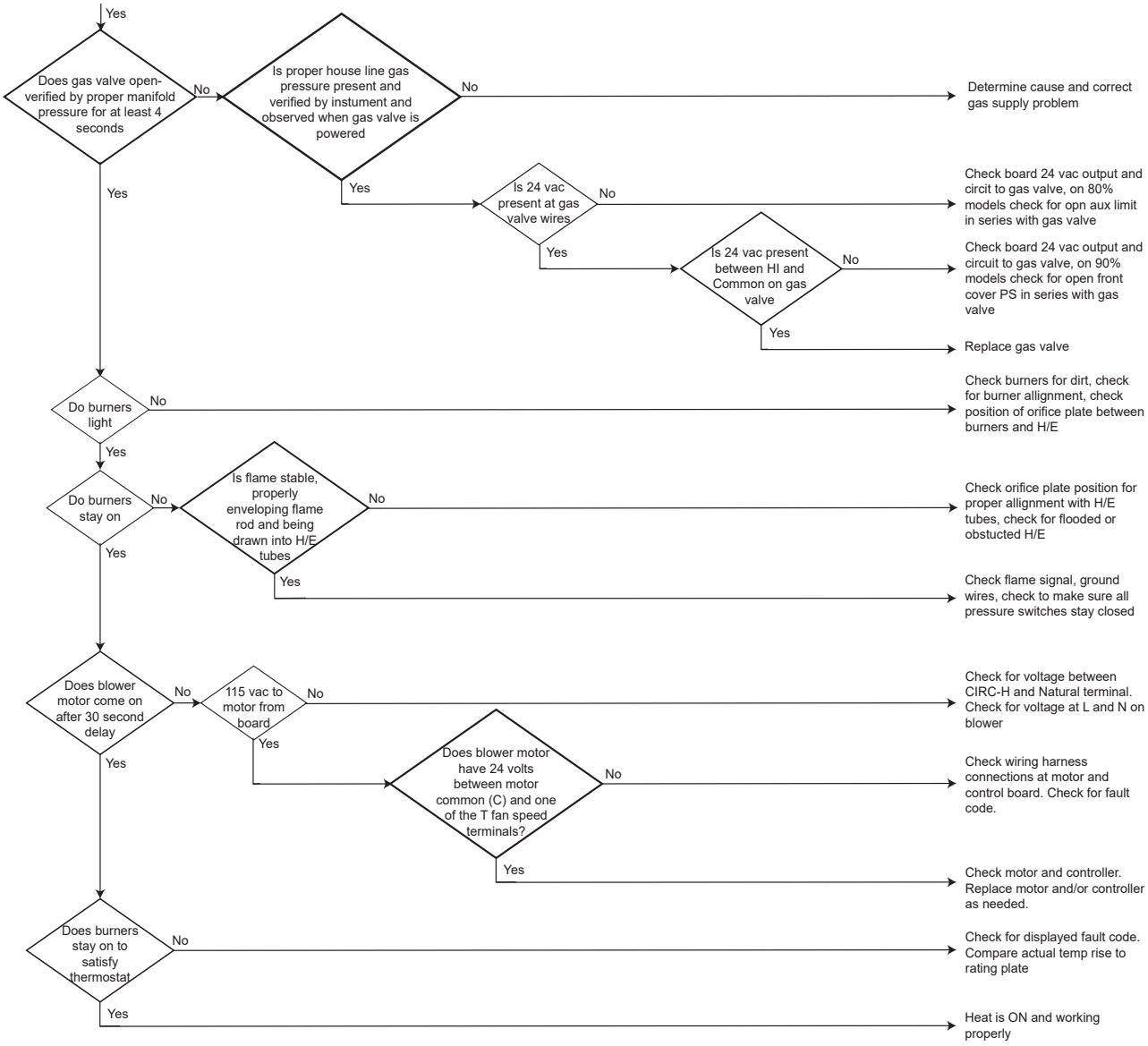
Yes
Does gas valve open-verified by proper manifold pressure for at least 4 seconds
No
Is proper house line gas pressure present and verified by instument and observed when gas valve is powered
No
Determine cause and correct gas supply problem
Yes
Is 24 vac present at gas valve wires
No
Check board 24 vac output and circit to gas valve, on 80% models check for opn aux limit in series with gas valve
Yes
Is 24 vac present between HI and Common on gas valve
No
Check board 24 vac output and circuit to gas valve, on 90% models check for open front cover PS in series with gas valve
Yes
Replace gas valve
Yes
Do burners light
No
Check burners for dirt, check for burner allignment, check position of orifice plate between burners and H/E
Yes
Do burners stay on
No
Is flame stable, properly enveloping flame rod and being drawn into H/E tubes
No
Check orifice plate position for proper allignment with H/E tubes, check for flooded or obstucted H/E
Yes
Yes
Check flame signal, ground wires, check to make sure all pressure switches stay closed
Does blower motor come on after 30 second delay
No
115 vac to motor from board
No
Check for voltage between CIRC-H and Natural terminal. Check for voltage at L and N on blower
Yes
Yes
Does blower motor have 24 volts between motor common (C) and one of the T fan speed terminals?
No
Check wiring harness connections at motor and control board. Check for fault code.
Yes
Check motor and controller. Replace motor and/or controller as needed.
Does burners stay on to satisfy thermostat
No
Check for displayed fault code. Compare actual temp rise to rating plate
Yes
Heat is ON and working properly

Error Code:
E0 - Lockout due to an excessive number of ignition retries (3 total)

Applicable Models:
All 90% models

Method of Error Detection:
Furnace fails to ignite after 3 retires

Error Decision Conditions:
No gas or low gas pressure at manifold. Bad hot surface ignitor - not glowing, dirty flame sensor

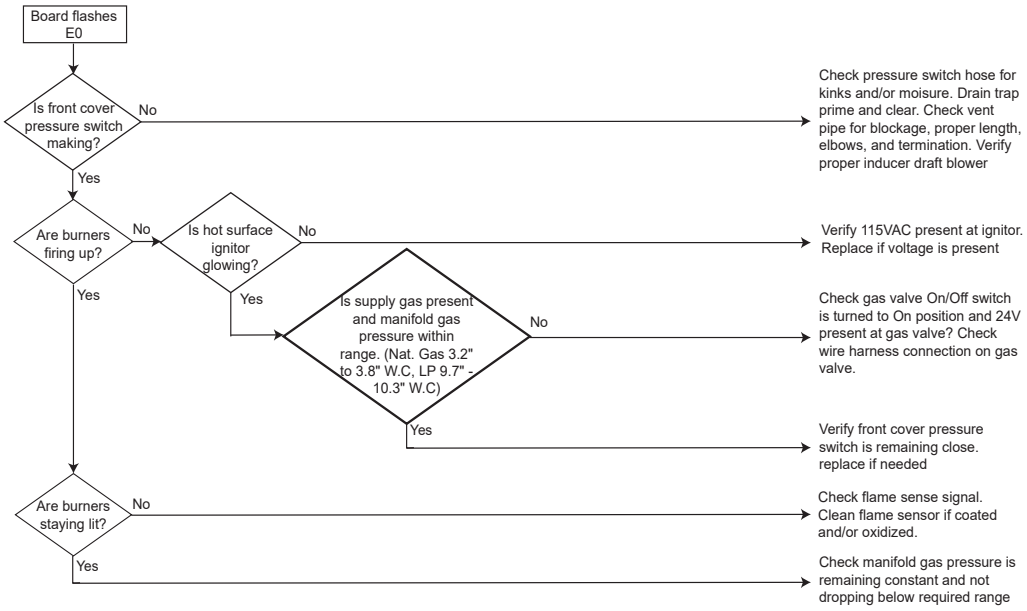

Error Code:
E1 - Pressure switch circuit closed at the start of heating cycle

E2 - Pressure switch closed circuit is not closed

Applicable Models:
(For Goodman/Amana 1-stage)
AM9S, GM9S

(For Goodman/Amana ULN)
AM9S-U, GM9S-U

(For Daikin 1-stage)
DM**SN

(For Daikin ULN)
DM**SN-U

Method of Error Detection:
Pressure switch during heating operation

Error Decision Conditions:
Pressure switch circuit closed when it should be open.
Pressure switch circuit open when it should be closed.

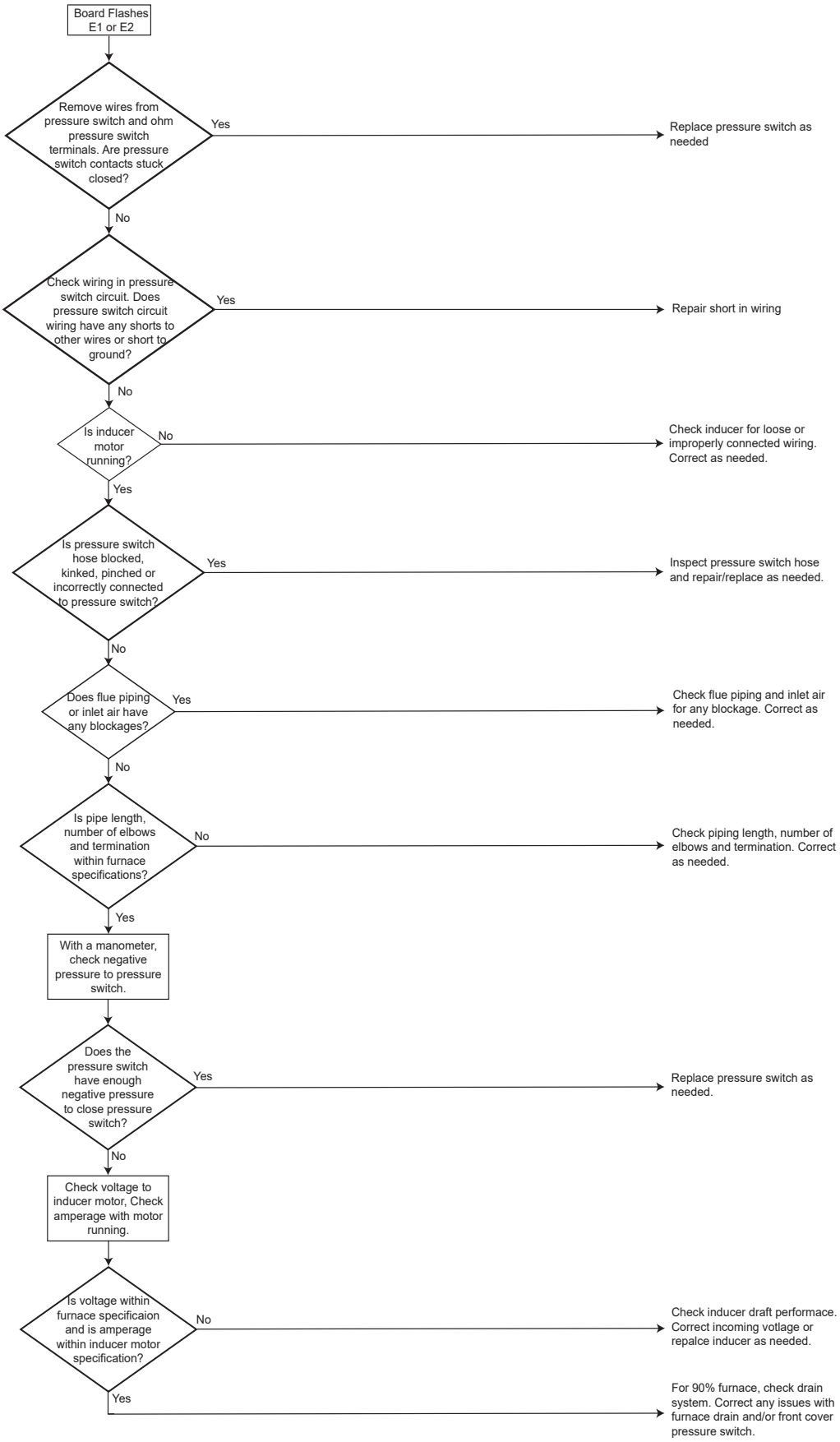

WARNING

HIGH VOLTAGE!
Disconnect ALL power before servicing or installing this unit. Multiple power sources may be present. Failure to do so may cause property damage, personal injury or death.

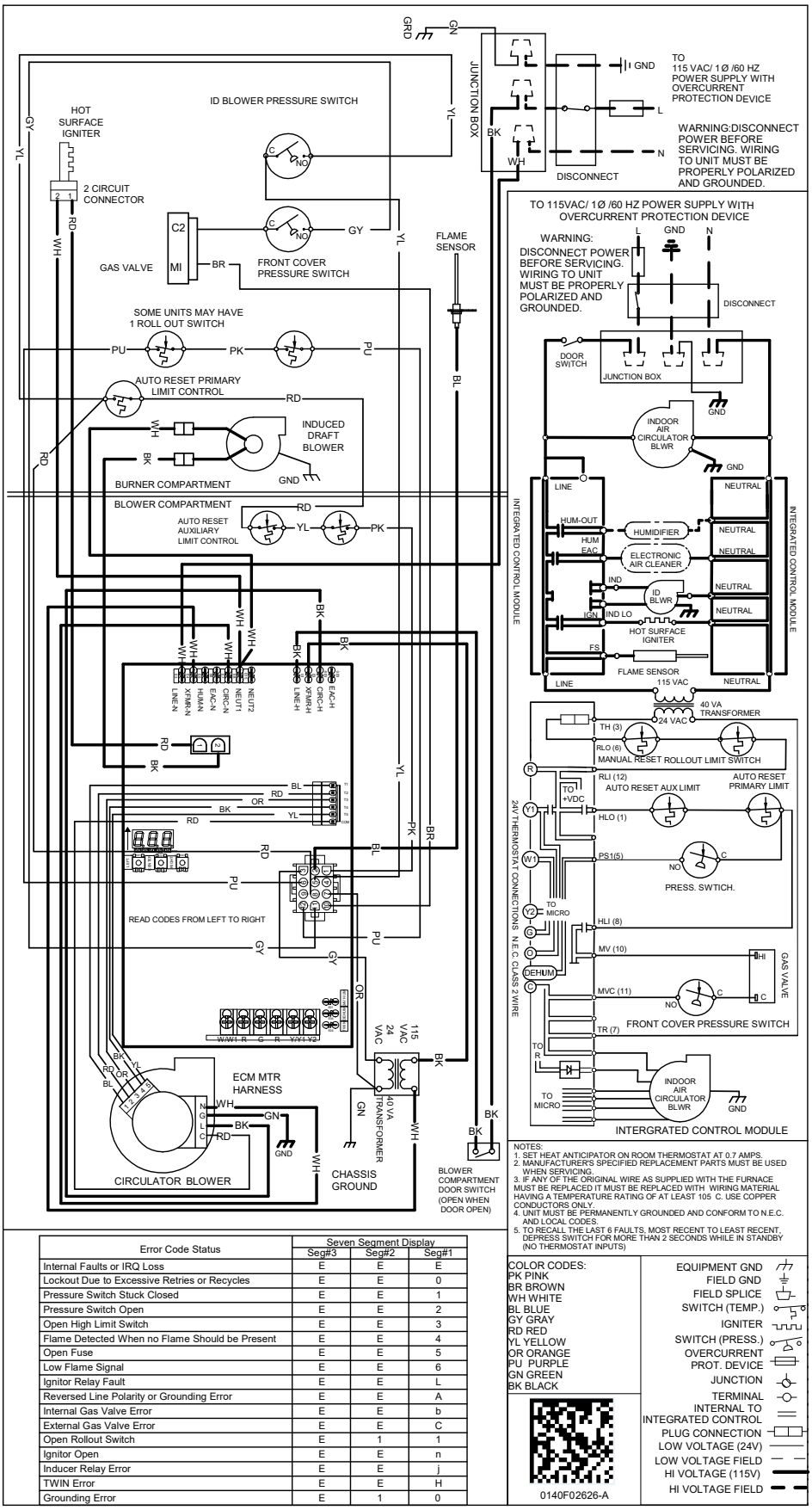

NOTES:
1. SET HEAT ANTICIPATOR ON ROOM THERMOSTAT AT 0.7 AMPS.
2. MANUFACTURER'S SPECIFIED REPLACEMENT PARTS MUST BE USED WHEN SERVICING.
3. IF ANY OF THE ORIGINAL WIRE AS SUPPLIED WITH THE FURNACE MUST BE REPLACED IT MUST BE REPLACED WITH WIRING MATERIAL HAVING A TEMPERATURE RATING OF AT LEAST 105 C. USE COPPER CONDUCTORS ONLY.
4. UNIT MUST BE PERMANENTLY GROUNDED AND CONFORM TO N.E.C. AND LOCAL CODES.
5. TO RECALL THE LAST 6 FAULTS, MOST RECENT TO LEAST RECENT, DEPRESS SWITCH FOR MORE THAN 2 SECONDS WHILE IN STANDBY (NO THERMOSTAT INPUTS)

Error Code Status	Seven Segment Display		
	Seg#3	Seg#2	Seg#1
Internal Faults or IRQ Loss	E	E	E
Lockout Due to Excessive Retries or Recycles	E	E	0
Pressure Switch Stuck Closed	E	E	1
Pressure Switch Open	E	E	2
Open High Limit Switch	E	E	3
Flame Detected When no Flame Should be Present	E	E	4
Open Fuse	E	E	5
Low Flame Signal	E	E	6
Ignitor Relay Fault	E	E	L
Reversed Line Polarity or Grounding Error	E	E	A
Internal Gas Valve Error	E	E	b
External Gas Valve Error	E	E	C
Open Rollout Switch	E	1	1
Ignitor Open	E	E	n
Inducer Relay Error	E	E	j
TWIN Error	E	E	H
Grounding Error	E	1	0

COLOR CODES:
PK PINK
BR BROWN
WH WHITE
BL BLUE
GY GRAY
RD RED
YL YELLOW
OR ORANGE
PU PURPLE
GN GREEN
BK BLACK

0140F02626-A

EQUIPMENT GND
FIELD GND
FIELD SPLICE
SWITCH (TEMP.)
IGNITER
SWITCH (PRESS.)
OVERCURRENT PROT. DEVICE
JUNCTION
TERMINAL
INTERNAL TO INTEGRATED CONTROL
PLUG CONNECTION
LOW VOLTAGE (24V)
LOW VOLTAGE FIELD
HI VOLTAGE (115V)
HI VOLTAGE FIELD

Wiring is subject to change. Always refer to the wiring diagram on the unit for the most up-to-date wiring.