Service Instructions

96% Single Stage Ultra-Low NOx Gas Furnaces
DM96SE*U & DM96SN*U

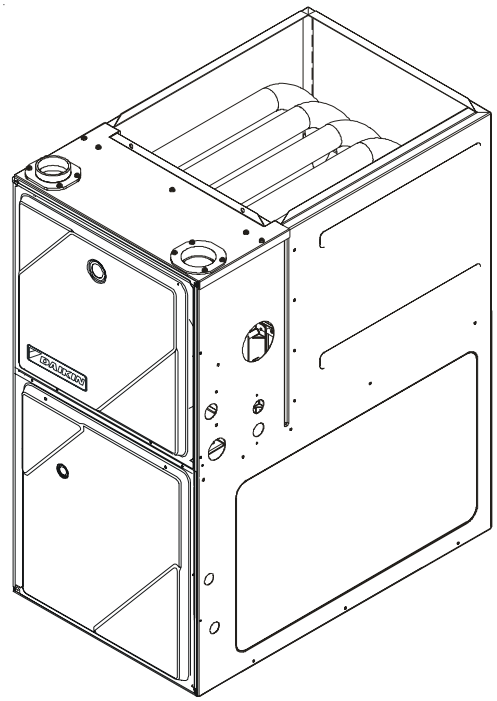

WARNING

ONLY PERSONNEL THAT HAVE BEEN TRAINED TO INSTALL, ADJUST, SERVICE, MAINTENANCE OR REPAIR (HEREINAFTER, "SERVICE") THE EQUIPMENT SPECIFIED IN THIS MANUAL SHOULD SERVICE THE EQUIPMENT.

THIS EQUIPMENT IS NOT INTENDED FOR USE BY PERSONS (INCLUDING CHILDREN) WITH REDUCED PHYSICAL, SENSORY OR MENTAL CAPABILITIES, OR LACK OF EXPERIENCE AND KNOWLEDGE, UNLESS THEY HAVE BEEN GIVEN SUPERVISION OR INSTRUCTION CONCERNING USE OF THE APPLIANCE BY A PERSON RESPONSIBLE FOR THEIR SAFETY.

CHILDREN SHOULD BE SUPERVISED TO ENSURE THAT THEY DO NOT PLAY WITH THE EQUIPMENT.

THE MANUFACTURER WILL NOT BE RESPONSIBLE FOR ANY INJURY OR PROPERTY DAMAGE ARISING FROM IMPROPER SUPERVISION, SERVICE OR SERVICE PROCEDURES. IF YOU SERVICE THIS UNIT, YOU ASSUME RESPONSIBILITY FOR ANY INJURY OR PROPERTY DAMAGE WHICH MAY RESULT. IN ADDITION, IN JURISDICTIONS THAT REQUIRE ONE OR MORE LICENSES TO SERVICE THE EQUIPMENT SPECIFIED IN THIS MANUAL, ONLY LICENSED PERSONNEL SHOULD SERVICE THE EQUIPMENT. IMPROPER SUPERVISION, INSTALLATION, ADJUSTMENT, SERVICING, MAINTENANCE OR REPAIR OF THE EQUIPMENT SPECIFIED IN THIS MANUAL, OR ATTEMPTING TO INSTALL, ADJUST, SERVICE OR REPAIR THE EQUIPMENT SPECIFIED IN THIS MANUAL WITHOUT PROPER SUPERVISION OR TRAINING MAY RESULT IN PRODUCT DAMAGE, PROPERTY DAMAGE, PERSONAL INJURY OR DEATH.

WARNING

DO NOT BYPASS SAFETY DEVICES.

This manual is to be used by qualified, professionally trained HVAC technicians only. Daikin does not assume any responsibility for property damage or personal injury due to improper service procedures or services performed by an unqualified person.
The material in this manual does not supercede manufacturer's installation and operation instructions.

RSD6612016r4
March 2023

Copyright © 2021-2023 ***DAIKIN COMFORT TECHNOLOGIES MANUFACTURING, L.P.***

TABLE OF CONTENTS

IMPORTANT INFORMATION.....2 - 4
PRODUCT IDENTIFICATION .....5 - 6
MAINTENANCE .....13 - 14
SERVICING.....15 - 25
TROUBLESHOOTING .....26 - 34
WIRING DIAGRAM ..... 35 - 36

IMPORTANT INFORMATION

Pride and workmanship go into every product to provide our customers with quality products. It is possible, however, that during its lifetime a product may require service. Products should be serviced only by a qualified service technician who is familiar with the safety procedures required in the repair and who is equipped with the proper tools, parts, testing instruments and the appropriate service manual. **REVIEW ALL SERVICE INFORMATION IN THE APPROPRIATE SERVICE MANUAL BEFORE BEGINNING REPAIRS.**

IMPORTANT NOTICES FOR CONSUMERS AND SERVICERS

RECOGNIZE SAFETY SYMBOLS, WORDS AND LABELS

WARNING

This unit should not be connected to, or used in conjunction with, any devices that are not design certified for use with this unit or have not been tested and approved by the manufacturer. Serious property damage or personal injury, reduced unit performance and/or hazardous conditions may result from the use of devices that have not been approved or certified by the manufacturer.

WARNING

TO PREVENT THE RISK OF PROPERTY DAMAGE, PERSONAL INJURY, OR DEATH, DO NOT STORE COMBUSTIBLE MATERIALS OR USE GASOLINE OR OTHER FLAMMABLE LIQUIDS OR VAPORS IN THE VICINITY OF THIS APPLIANCE.

WARNING

HIGH VOLTAGE
DISCONNECT ALL POWER BEFORE SERVICING OR INSTALLING THIS UNIT. MULTIPLE POWER SOURCES MAY BE PRESENT. FAILURE TO DO SO MAY CAUSE PROPERTY DAMAGE, PERSONAL INJURY OR DEATH.

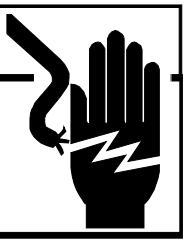

IMPORTANT INFORMATION

WARNING

IF THE INFORMATION IN THESE INSTRUCTIONS IS NOT FOLLOWED EXACTLY, A FIRE OR EXPLOSION MAY RESULT CAUSING PROPERTY DAMAGE, PERSONAL INJURY OR LOSS OF LIFE.

– DO NOT STORE OR USE GASOLINE OR OTHER FLAMMABLE VAPORS AND LIQUIDS IN THE VICINITY OF THIS OR ANY OTHER APPLIANCE.

– WHAT TO DO IF YOU SMELL GAS:

- DO NOT TRY TO LIGHT ANY APPLIANCE.
- DO NOT TOUCH ANY ELECTRICAL SWITCH; DO NOT USE ANY PHONE IN YOUR BUILDING.
- IMMEDIATELY CALL YOUR GAS SUPPLIER FROM A NEIGHBOR'S PHONE. FOLLOW THE GAS SUPPLIER'S INSTRUCTIONS.
- IF YOU CANNOT REACH YOUR GAS SUPPLIER, CALL THE FIRE DEPARTMENT.

– INSTALLATION AND SERVICE MUST BE PERFORMED BY A QUALIFIED INSTALLER, SERVICE AGENCY OR THE GAS SUPPLIER.

WARNING

SHOULD OVERHEATING OCCUR OR THE GAS SUPPLY FAIL TO SHUT OFF, TURN OFF THE MANUAL GAS SHUTOFF VALVE EXTERNAL TO THE FURNACE BEFORE TURNING OFF THE ELECTRICAL SUPPLY.

To locate an authorized servicer, please consult your telephone book or the dealer from whom you purchased this product. For further assistance, please contact:

CONSUMER INFORMATION LINE
DAIKIN BRAND PRODUCTS
TOLL FREE
1-855-770-5678 (U.S. only)
email us at:
customerservice@daikincomfort.com
fax us at: (731) 856-1821
(Not a technical assistance line for dealers.)

Outside the U.S., call 1-713-861-2500.
(Not a technical assistance line for dealers.) Your telephone company will bill you for the call.

IMPORTANT INFORMATION

DANGER
PELIGRO

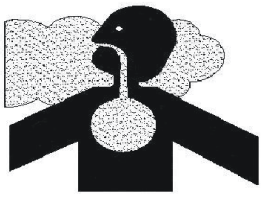

CARBON MONOXIDE POISONING HAZARD

Special Warning for Installation of Furnace or Air Handling Units in Enclosed Areas such as Garages, Utility Rooms or Parking Areas

Carbon monoxide producing devices (such as an automobile, space heater, gas water heater, etc.) should not be operated in enclosed areas such as unventilated garages, utility rooms or parking areas because of the danger of carbon monoxide (CO) poisoning resulting from the exhaust emissions. If a furnace or air handler is installed in an enclosed area such as a garage, utility room or parking area and a carbon monoxide producing device is operated therein, there must be adequate, direct outside ventilation.

This ventilation is necessary to avoid the danger of CO poisoning which can occur if a carbon monoxide producing device continues to operate in the enclosed area. Carbon monoxide emissions can be (re)circulated throughout the structure if the furnace or air handler is operating in any mode.

CO can cause serious illness including permanent brain damage or death. B10259-216

RIESGO DE INTOXICACIÓN POR MONÓXIDO DE CARBONO

Advertencia especial para la instalación de calentadores ó manejadoras de aire en áreas cerradas como estacionamientos ó cuartos de servicio.

Los equipos ó aparatos que producen monóxido de carbono (tal como automóvil, calentador de gas, calentador de agua por medio de gas, etc) no deben ser operados en áreas cerradas debido al riesgo de envenenamiento por monóxido de carbono (CO) que resulta de las emisiones de gases de combustión. Si el equipo ó aparato se opera en dichas áreas, debe existir una adecuada ventilación directa al exterior.

Esta ventilación es necesaria para evitar el peligro de envenenamiento por CO, que puede ocurrir si un dispositivo que produce monóxido de carbono sigue operando en el lugar cerrado.

Las emisiones de monóxido de carbono pueden circular a través del aparato cuando se opera en cualquier modo.

El monóxido de carbono puede causar enfermedades severas como daño cerebral permanente ó muerte. B10259-216

RISQUE D'EMPOISONNEMENT AU MONOXYDE DE CARBONE

Avertissement special au sujet de l'installation d'appareils de chauffage ou de traitement d'air dans des endroits clos, tets les garages, les locaux d'entretien et les stationnements.

Evitez de mettre en marche les appareils produisant du monoxyde de carbone (tels que les automobile, les appareils de chauffage autonome,etc.) dans des endroits non ventilés tels que les d'empoisonnement au monoxyde de carbone. Si vous devez faire fonctionner ces appareils dans un endroit clos, assures-vous qu'il y ait une ventilation directe provenant de l'exterier.

Cette ventilation est nécessaire pour éviter le danger d'intoxication au CO pouvant survenir si un appareil produisant du monoxyde de carbone continue de fonctionner au sein de la zone confinée.

Les émissions de monoxyde de carbone peuvent etre recircules dans les endroits clos, si l'appareil de chauffage ou de traitement d'air sont en marche.

Le monoxyde de carbone peut causer des maladies graves telles que des dommages permanents au cerveau et meme la mort. B10259-216

Amana® is a registered trademark of Maytag Corporation or its related companies and is used under license. All rights reserved.

PRODUCT IDENTIFICATION

The model and manufacturing number are used for positive identification of component parts used in manufacturing. Please use these numbers when requesting service or parts information.

D	M	96	S	E	060	3	B	U	A	A
1	2	3,4	5	6	7,8,9	10	11	12	13	14

Brand
D - Daikin Brand

Configuration
M - Upflow/Horizontal

AFUE
96 – 96% AFUE

Gas Valve
S - Single Stage

Motor
E - Multi-Speed ECM

MBTU/h
040 - 40,000 BTU/h
060 - 60,000 BTU/h
080 - 80,000 BTU/h

Minor Revision
A - Initial Release
B - 1st Revision

Major Revision
A - Initial Release
B - 1st Revision

NOx
U-Ultra Low Nox (14ng/J)

Cabinet Width
B - 17½"
C - 21"

Maximum CFM
3 - 1200 CFM
5 - 2000 CFM

D	M	96	S	N	060	3	B	U	A	A
1	2	3,4	5	6	7,8,9	10	11	12	13	14

BRAND
D - DAIKIN

CONFIGURATION
M - UPFLOW/HORIZONTAL

AFUE
80 - 80% AFUE
96 - 96% AFUE

GAS VALVE
S - 1 STAGE

MOTOR
N - MULTI-SPEED ECM (9 TAPS)

MBTU/H
040 - 40,000 BTU/H
060 - 60,000 BTU/H
080 - 80,000 BTU/H

MINOR REVISION
A - INITIAL RELEASE
B - 1ST REVISION

MAJOR REVISION
A - INITIAL RELEASE
B - 1ST REVISION

NOX
U - ULTRA LOW NOX (≤ 14 NG/J NOX)

CABINET WIDTH
A - 14"
B - 17.5"
C - 21"
D - 24.5"

MAXIMUM CFM
3 - 1200 CFM
4 - 1600 CFM
5 - 2000 CFM

PRODUCT IDENTIFICATION

MODEL	MFG #	DESCRIPTION
DM96SE*U **DM96SN*U**	DM96SE0403BU AA DM96SE0603BU AA DM96SE0805CU AA DM96SN0403BU AA DM96SN0603BU AA DM96SN0805CU AA	**Daikin 96% Ultra-Low NOx Gas Furnace:** This furnace complies with the SCAQMD Rule 1111 14 ng/J NOx emission limit. Upflow/Horizontal Left and Right, Induced Draft, Nidec multi-speed ECM motor. Stainless Steel tubular heat exchanger, 115 volt silison nitride igniter. Left or right gas entry. Line voltage EAC & HUM terminals

Safety

Please adhere to the following warnings and cautions when installing, adjusting, altering, servicing, or operating the furnace.

WARNING

TO PREVENT PERSONAL INJURY OR DEATH DUE TO IMPROPER INSTALLATION, ADJUSTMENT, ALTERATION, SERVICE OR MAINTENANCE, REFER TO THIS MANUAL. FOR ADDITIONAL ASSISTANCE OR INFORMATION, CONSULT A QUALIFIED INSTALLER, SERVICE AGENCY OR THE GAS SUPPLIER.

WARNING

TO PREVENT POSSIBLE PROPERTY DAMAGE, PERSONAL INJURY OR DEATH DUE TO ELECTRICAL SHOCK, THE FURNACE MUST BE LOCATED TO PROTECT THE ELECTRICAL COMPONENTS FROM WATER.

Charge (ESD) Precautions

NOTE: Discharge your body's static electricity before touching unit. An electrostatic discharge can adversely affect electrical components.

Use the following precautions during furnace installation and servicing to protect the integrated control module from damage. By putting the furnace, the control, and the person at the same electrostatic potential, these steps will help avoid exposing the integrated control module to electrostatic discharge. This procedure is applicable to both installed and uninstalled (ungrounded) furnaces.

1. Disconnect all power to the furnace. Do not touch the integrated control module or any wire connected to the control prior to discharging your body's electrostatic charge to ground.
2. Firmly touch a clean, unpainted, metal surface of the furnace near the control. Any tools held in a person's hand during grounding will be discharged.
3. Service integrated control module or connecting wiring following the discharge process in Step 2. Use caution not to recharge your body with static electricity; (i.e., do not move or shuffle your feet, do not touch ungrounded objects, etc.). If you come in contact with an ungrounded object, repeat Step 2 before touching control or wires.
4. Discharge any static electricity from your body to ground before removing a new control from its container. Follow Steps 1 through 3 if installing the control on a furnace. Return any old or new controls to their containers before touching any ungrounded object.

Product Application

This product is designed for use as a residential home gas furnace. It is **not** designed or certified for use in mobile home, trailer, or recreational vehicle applications.

In the U.S.A., this furnace can be used in the following non-industrial commercial applications: Schools, Office buildings, Churches, Retail stores, Nursing homes, Hotels/motels, Common or office areas. In all applications, the furnace must be installed per the installation instructions.

DM96SE*U & DM96SN*U furnaces are ETL certified. All DM96SE*U & DM96SN*U furnaces are built for use with Natural gas only & may not be converted for use with LP gas.

DM96SE*U & DM96SN*U high efficiency furnaces are dual certified. Dual certification means that the combustion air inlet pipe is optional and the furnace can be vented as a:

- Non-direct vent (single pipe) central forced air furnace in which combustion air is taken from the installation area or from air ducted from the outside or,
- Direct vent (dual pipe) central forced air furnace in which all combustion air supplied directly to the furnace burners through a special air intake system outlined in this manual and the installation instructions.

To ensure proper installation, operation and servicing, thoroughly read the installation and service manuals for specifics pertaining to the installation, servicing and application of this product.

WARNING

POSSIBLE PROPERTY DAMAGE, PERSONAL INJURY OR DEATH DUE TO FIRE, EXPLOSION, SMOKE, SOOT, CONDENSTAION, ELECTRICAL SHOCK OR CARBON MONOXIDE MAY RESULT FROM IMPROPER INSTALLATION, REPAIR, OPERATION, OR MAINTENANCE OF THIS PRODUCT.

WARNING

TO PREVENT PROPERTY DAMAGE, PERSONAL INJURY OR DEATH DUE TO FIRE, DO NOT INSTALL THIS FURNACE IN A MOBILE HOME, TRAILER, OR RECREATIONAL VEHICLE.

To ensure proper furnace operation, install, operate, maintain and service the furnace in accordance with the installation, operation and service instructions, all local building codes and ordinances. In their absence, follow the latest edition of the National Fuel Gas Code (NFPA 54/ANSI Z223.1), and/or CAN/CGA B149 Installation Codes, local plumbing or waste water codes, and other applicable codes.

A copy of the National Fuel Gas Code (NFPA 54/ANSI Z223.1) can be obtained from any of the following:

American National Standards Institute
25 West 43rd Street, 4th Floor
New York, NY 10036

National Fire Protection Association
1 Batterymarch Park
Quincy, MA 02169-7471

CSA International
8501 East Pleasant Valley
Cleveland, OH 44131

A copy of the CAN/CGA B149 Installation Codes can be obtained from:

CSA International
178 Rexdale Boulevard
Etobicoke, Ontario, Canada M9W, 1R3

The rated heating capacity of the furnace should be greater than or equal to the total heat loss of the area to be heated. The total heat loss should be calculated by an approved method or in accordance with "ASHRAE Guide" or "Manual J-Load Calculations" published by the Air Conditioning Contractors of America.

Maximum Allowable Vent Length of Vent/Flue Pipe & Combustion Air Pipe (Ft)

0-4,999 FT ALTITUDE

MODEL	Pipe Size (in)	Number of Elbows							
		1	2	3	4	5	6	7	8
DM96SE0403BU DM96SN0403BU	2	95	90	85	80	75	70	65	60
	3	103	96	89	82	75	68	61	54
DM96SE0603BU DM96SN0603BU	2	90	85	80	75	70	65	60	55
	3	158	151	144	137	130	123	116	109
DM96SE0805CU DM96SN0805CU	2	55	50	45	40	35	30	25	20
	3	151	144	137	130	123	116	109	102

5,000-7,500 FT ALTITUDE

MODEL	Pipe Size (in)	Number of Elbows							
		1	2	3	4	5	6	7	8
DM96SE0403BU DM96SN0403BU	3	100	93	87	81	75	69	63	57
DM96SE0603BU DM96SN0603BU	3	100	93	87	81	75	69	63	57
DM96SE0805CU DM96SN0805CU	3	80	73	67	61	55	49	43	37

1) Maximum allowable limits listed on individual lengths for inlet and flue and NOT a combination.
2) Minimum requirement for each vent pipe is five (5) feet in length and one elbow/tee.
3) Tee used in the vent/flue termination must be included when determining the number of elbows in the piping system.
4) 2 1/2" or 3" diameter pipe can be used in place of 2" diameter pipe.
5) Increased Clearance Configurations using (2) 45 deg. Long Sweep elbows should be considered equivalent to one 90 deg. elbow.
6) One 90° elbow should be secured to the combustion air intake connection.

WARNING

Do not operate the furnace with the rain cap removed as reciruclation of the flue gases may occur. Water may also collect inside the larger combustin air pipe and flow to the burner enclosure. Failure to follow this warning can result in property damage, equipment damage, personal injury or death.

Condensate Drain Lines and Drain Trap

A condensing gas furnace achieves its high level of efficiency by extracting almost all of the heat from the products of combustion and cooling them to the point where condensation takes place. The condensate which is generated must be piped to an appropriate drain location.

WARNING

In upright upflow installations, the drain trap must be mounted on the opposite side of the unit from the junction box. This will reduce the risk of water reaching the junction box in the event of a blocked drain condition. Failure to follow these instructions can result in possible property damage, personal injury, or death due to electrical shock.

- •If the drain line is routed through an area which may see temperatures near or below freezing, precautions must be taken to prevent condensate from freezing within the drain line.
- •If an air conditioning coil is installed with the furnace, a common drain may be used. An open tee must be installed in the drain line, near the cooling coil, to relieve positive air pressure from the coil's plenum. This is necessary to prohibit any interference with the function of the furnace's drain trap.

Drain Information for Horizontal Installations

NOTE: Horizontal installations require 5.5" under the furnace to accommodate the drain trap. The horizontal furnace must be installed with ¾" slope from back to front to permit condensate flow towards the front of the furnace.

When installing a DM96SE*U or DM96SN*U horizontally with the left side down, there are two options for connecting the vent pipe to the furnace.

Option 1

Venting may be connected to the furnace vent pipe fitting on the original top (now the end) of the furnace.

Option 2

The internal vent pipe and elbow may be removed from the furnace to permit the vent to exit the top (original side) of the furnace. If this option is used, an RF000142 Vent-Drain coupling must be used to keep condensate from collecting in the inducer assembly.

To install the drain, refer to the following instructions and illustration.

COMBUSTION AIR INTAKE PIPE OPTIONS:

The RF000142 coupling can be secured directly to the furnace intake coupling if condensation is occurring in the combustion air inlet pipe. If the RF000142 is used on the combustion air inlet, it must be installed with the arrow pointing up. It should be noted, the combustion air will actually be moving in a direction opposite of the arrow on the RF000142 coupling.

Alternatively a tee may be used in the combustion air intake pipe for the same purpose. If either option is used, a field supplied trapped drain tube, free-draining to proper condensate disposal location must be present. A loop in the drain tube can serve as a trap. The unused RF000142 drain fitting should be capped.

1. Remove screws from vent flange.
2. Remove internal elbow and vent pipe.
3. Cut pipe 2 1/2" from flange.
4. Remove cabinet plug adjacent to inducer outlet and install an original cabinet vent hole.
5. Install RF000142 coupling on inducer outlet.
6. Install flanged vent section removed in step 2 and secure with clamps.
7. Secure flange to cabinet using screws removed in step

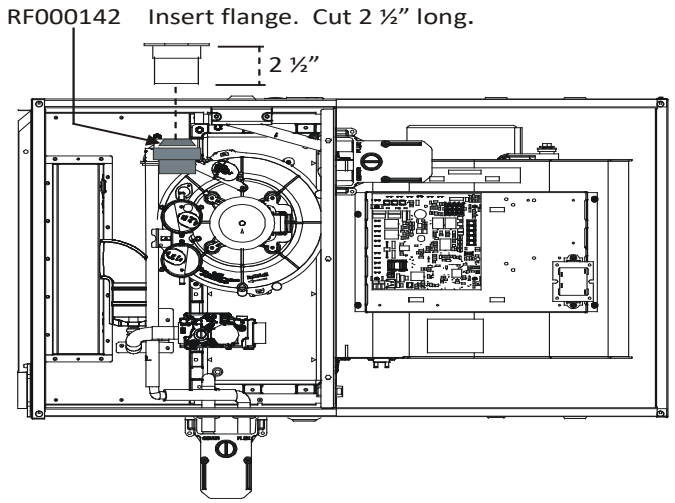

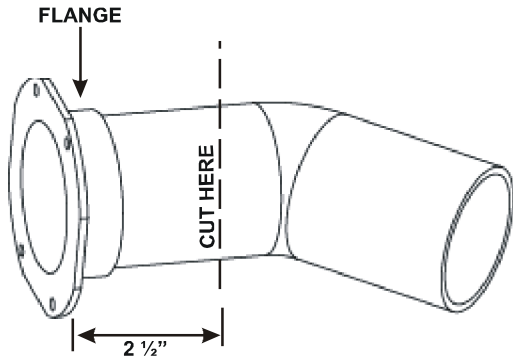

HIGH ALTITUDE

The furnace, as shipped, requires no change to run between 0-4500 feet. at all altitudes the air temperature rise must be within the range listed on the specification sheet applicable to your model for the fuel used. manifold pressure adjustments and combustion analysis are required for all installations above 4500 ft. refer to "gas supply pressure measurement" section for instruction on how to properly measure and adjust manifold "outlet" pressure. the furnace should operate for a minimum of 15 minutes before taking a combustion sample. combustion samples should be taken from beyond the furnace exhaust and must be within provided CO_2% range. see the following table for recommended manifold pressure adjustments and proper CO_2% range. gas heating values can vary; further pressure adjustment may be necessary to ensure furnace operates within acceptable CO_2 range.

96% Model	Manifold Pressure at 5000ft	Manifold Pressure at 7500ft	CO2% Natural Gas	Max Allowable Venting (3 in only)
040	2.5" w.c.	2.4" w.c.	6.5 - 8.5	100ft
060				100ft
080				80ft

GAS SUPPLY AND PIPING

The furnace rating plate includes the approved furnace gas input rating.

CAUTION

TO PREVENT UNRELIABLE OPERATION OR EQUIPMENT DAMAGE, THE INLET GAS SUPPLY PRESSURE MUST BE AS SPECIFIED ON THE UNIT RATING PLATE WITH ALL OTHER HOUSEHOLD GAS FIRED APPLIANCES OPERATING.

Inlet gas supply pressures must be maintained within the ranges specified below. The supply pressure must be constant and available with all other household gas fired appliances operating. The minimum gas supply pressure must be maintained to prevent unreliable ignition. The maximum must not be exceeded to prevent unit overfiring.

INLET GAS SUPPLY PRESSURE		
Natural Gas	Minimum: 4.5" w.c.	Maximum: 10.0" w.c.

GAS VALVE

This unit is equipped with a 24 volt gas valve controlled during furnace operation by the integrated control module. Taps for measuring the gas supply pressure and manifold pressure are provided on the valve.

NOTE: The gas supply pressure on White-Rodgers "J" model gas valve, used on single stage furnaces, can be checked with a gas pressure test kit (Part #0151K00000S) available through our authorized distributors.

The gas valve has a manual ON/OFF control located on the valve itself. This control may be set only to the "ON" or "OFF" position. Refer to the *Lighting Instructions Label* or the *"Putting the Furnace Into Operation"* section of this manual or the installation instructions for use of this control during start up and shut down periods.

Natural Gas Capacity of Pipe In Cubic Feet of Gas Per Hour (CFH)					
Length of Pipe in Feet	Nominal Black Pipe Size				
	1/2"	3/4"	1"	1 1/4"	1 1/2"
10	132	278	520	1050	1600
20	92	190	350	730	1100
30	73	152	285	590	980
40	63	130	245	500	760
50	56	115	215	440	670
60	50	105	195	400	610
70	46	96	180	370	560
80	43	90	170	350	530
90	40	84	160	320	490
100	38	79	150	305	460

(Pressure 0.5 psig or less and pressure drop of 0.3" W.C.; Based on 0.60 Specific Gravity Gas)

$$CFH = \frac{\text{BTUH Furnace Input}}{\text{Heating Value of Gas (BTU/Cubic Foot)}}$$

GAS PIPING CHECKS

Before placing unit in operation or after servicing, leak test gas connections.

WARNING

TO AVOID THE POSSIBLITY OF EXPLOSION OR FIRE, NEVER USE A MATCH OR OPEN FLAME TO TEST FOR LEAKS.

Check for leaks using an approved chloride-free soap and water solution, an electronic combustible gas detector, or other approved testing methods.

NOTE: Never exceed specified pressures for testing. Higher pressure may damage the gas valve and cause subsequent overfiring, resulting in heat exchanger failure. Disconnect this unit and shutoff valve from the gas supply piping system before pressure testing the supply piping system with pressures in excess of 1/2 psig (3.48 kPa). Isolate this unit from the gas supply piping system by closing its external manual gas shutoff valve before pressure testing supply piping system with test pressures equal to or less than 1/2 psig (3.48 kPa).

WARNING

AN UNDETECTED GAS LEAK WILL CREATE A DANGER OF EXPLOSION OR FIRE. IF THE PRESENCE OF GAS IS SUSPECTED, FOLLOW THE INSTRUCTIONS ON THE COVER OF THIS MANUAL. FAILURE TO DO SO COULD RESULT IN SERIOUS PERSONAL INJURY OR DEATH.

WARNING

IF THE INFORMATION IN THESE INSTRUCTIONS IS NOT FOLLOWED EXACTLY, A FIRE OR EXPLOSION MAY RESULT CAUSING PROPERTY DAMAGE, PERSONAL INJURY OR LOSS OF LIFE.

– DO NOT STORE OR USE GASOLINE OR OTHER FLAMMABLE VAPORS AND LIQUIDS IN THE VICINITY OF THIS OR ANY OTHER APPLIANCE.

– **WHAT TO DO IF YOU SMELL GAS**:

- DO NOT TRY TO LIGHT ANY APPLIANCE.
- DO NOT TOUCH ANY ELECTRICAL SWITCH; DO NOT USE ANY PHONE IN YOUR BUILDING.
- IMMEDIATELY CALL YOUR GAS SUPPLIER FROM A NEIGHBOR'S PHONE. FOLLOW THE GAS SUPPLIER'S INSTRUCTIONS.
- IF YOU CANNOT REACH YOUR GAS SUPPLIER, CALL THE FIRE DEPARTMENT.

– INSTALLATION AND SERVICE MUST BE PERFORMED BY A QUALIFIED INSTALLER, SERVICE AGENCY OR THE GAS SUPPLIER.

ELECTRICAL CONNECTIONS

WARNING

TO AVOID THE RISK OF ELECTRICAL SHOCK, WIRING TO THE UNIT MUST BE PROPERLY POLARIZED AND GROUNDED.

WARNING

HIGH VOLTAGE

DISCONNECT ALL POWER BEFORE SERVICING OR INSTALLING THIS UNIT. MULTIPLE POWER SOURCES MAY BE PRESENT. FAILURE TO DO SO MAY CAUSE PROPERTY DAMAGE, PERSONAL INJURY OR DEATH.

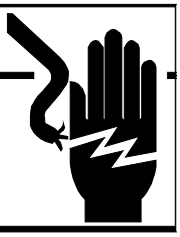

CAUTION

LABEL ALL WIRES PRIOR TO DISCONNECTION WHEN SERVICING CONTROLS. WIRING ERRORS CAN COUSE IMPROPER AND DANGEROUS OPERATION. VERIFY PROPER OPERATION AFTER SERVICING.

WIRING HARNESS

The wiring harness is an integral part of this furnace. Field alteration to comply with electrical codes should not be required. Wires are color coded for identification purposes. Refer to the wiring diagram for wire routings. If any of the original wire as supplied with the furnace must be replaced, it must be replaced with wiring material having a temperature rating of at least 105° C. Any replacement wiring must be copper conductor.

115 VOLT LINE VOLTAGE CONNECTION OF ACCESSORIES (HUMIDIFIER AND ELECTRONIC AIR CLEANER

The furnace integrated control module is equipped with line voltage accessory terminals for controlling power to an optional field-supplied humidifier and/or electronic air cleaner.

The accessory load specifications are as follows:

Turn OFF power to the furnace before installing any accessories. Follow the humidifier or air cleaner manufacturers' instructions for locating, mounting, grounding, and controlling these accessories. Accessory wiring connections are to be made through the 1/4" quick connect terminals provided on the furnace integrated control module. The humidifier and electronic air cleaner hot terminals are identified as HUM and EAC. The humidifier and electronic air cleaner neutral terminals are identified as NEUTRAL. All field wiring must conform to applicable codes. Connections should be made as shown.

If it is necessary for the installer to supply additional line voltage wiring to the inside of the furnace, the wiring must conform to all local codes, and have a minimum temperature rating of 105°C. All line voltage wire splices must be made inside the furnace junction box.

The integrated control module single humidifier terminal (HUM) is energized with 115 volts whenever the induced draft blower is energized. This terminal can also be used to provide 115 volt power to a humidifier transformer. The remaining primary transformer wire would be connected to the Line N on the control board. The integrated control module electronic air cleaner terminals (EAC) are energized with 115 volts whenever the circulator blower is energized.

NOTE: Wire routing must not to interfere with circulator blower operation, filter removal, or routine maintenance.

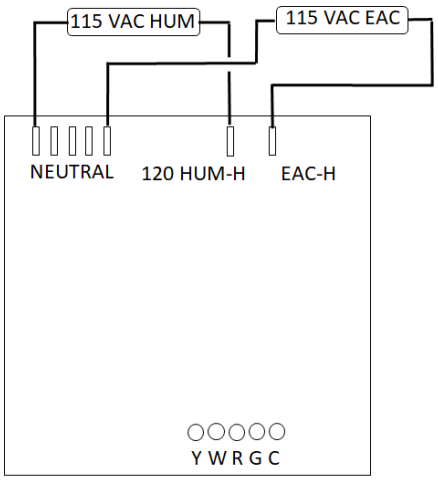

CAUTION

Edges of sheet metal holes may be sharp. Use gloves as precaution when removing hole plugs.

WARNING

To avoid the risk of electrical shock, injury, or death, the furnace must be electrically grounded in accordance with local codes or, in their absence, with the latest edition of the National Electric Code.

WARNING

HIGH VOLTAGE

Disconnect ALL power before servicing or changing any electrical wiring. Multiple power sources may be present. Failure to do so may cause property damage, personal injury or death.

If it is necessary for the installer to supply additional line voltage wiring to the inside of the furnace, the wiring must conform to all local codes, and have a minimum temperature rating of 105°C. All line voltage wire splices must be made inside the furnace junction box.

24 VOLT THERMOSTAT WIRING

NOTE: Low voltage connections can be made through either the right or left side panel. Wire routing must not interfere with circulator blower operation, filter removal, or routine maintenance.

A 40 V.A. transformer and an integrated electronic control are built into the furnace to allow use with most cooling equipment. Consult the wiring diagram, located in the Technical Manual or on the blower door for further details of 115 Volt and 24 Volt wiring.

THERMOSTAT WIRING

The single stage furnace will have a "W" terminal and will use a single stage thermostat. The following drawing illustrates the typical field wiring for a heat only single stage system and a single stage heating/single stage cooling system. Refer to the following figures for proper connections to the integrated control module.

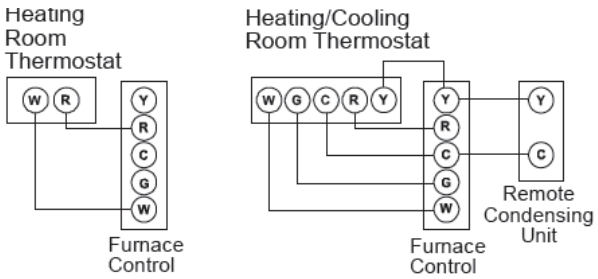

Typical Field Wiring (24 VAC Control Circuit)

NORMAL SEQUENCE OF OPERATION

Power Up

- 120 VAC power applied to furnace.
- Integrated ignition control performs internal checks.
- LED light will flash once at power up and then remain on.
- Integrated ignition control monitors safety circuit continuously.
- Furnace awaits call from thermostat.

Heating Mode

The normal operational sequence in heating mode is as follows:

- R and W thermostat contacts close, initiating a call for heat.
- Integrated control module performs safety circuit checks.
- **Pressure Sensor Verification:** The control operates the inducer in a manner to verify the pressure sensor null value and span operation are within specification. If the system is operating correctly, this test takes only a few seconds. If the system is not functioning properly, the control times out after a maximum 90 seconds and display the proper fault code.
- Induced draft blower is energized for 30 second prepurge.
- Igniter warm up begins after 30 second prepurge expires.
- Gas valves open at end of igniter warm up period, delivering gas to burners and establishing flame.
- Integrated control module monitors flame presence. Gas valve will remain open only if flame is detected.
- Circulator blower is energized on high heat speed following a fixed 30 second blower on delay. Electronic air cleaner terminals are energized with circulator blower.
- Furnace operates; integrated control module monitors safety circuits continuously.
- R and W thermostat contacts open, completing the call for heat.
- Gas valve closes, extinguishing flame.
- Induced draft blower is de-energized following a thirty second post purge.
- HUM terminal is de-energized.
- Circulator blower continues running for selected heat off delay period factory set at 120 seconds. If required this can be changed in the field.
- Electronic air cleaner is de-energized.
- Furnace awaits the next call from thermostat.

Cooling Mode

The normal operational sequence in cooling mode is as follows:

- R, Y and G thermostat contacts close, initiating a call for cool.
- Integrated control module performs safety circuit checks.
- Outdoor fan and compressor are energized.
- Circulator blower is energized on cool speed following a fixed six second on delay. If required this can be changed in the field to 45 seconds. Electronic air cleaner terminals are energized with circulator blower.
- Furnace circulator blower and outdoor cooling unit run, integrated control module monitors safety circuits continuously.
- R, Y and G thermostat contacts open, completing the call for cool.
- Outdoor fan and compressor are de-energized.
- Circulator blower is de-energized following a fixed forty firve second cool off delay period. Electronic air cleaner terminals are de-energized.
- Furnace awaits the next call from thermostat.

Fan Only Mode

The normal operational sequence in Fan Only Mode is as follows:

- R and G thermostat contacts close, initiating a call for fan.
- Integrated control module performs safety circuit checks.
- Circulator blower is energized on low heat speed. Electronic air cleaner terminals are energized.
- Circulator blower runs, integrated control module monitors safety circuits continuously.

Combustion Quality

Combustion quality can be affected by several factors. Major factors are venting and draining.

Venting

The venting system should be planned and installed with the following in mind;

- •Should not be longer than necessary
- •Use 45°elbows rather than 90° elbows when possible
- •Must not sag or otherwise trap condensate
- •Use longest radius fittings possible
- •If using 3" venting, make the transition from 2" to 3" as close as practically possible
- •Make sure there is no flue gas recirculation into the combustion air pipe
-

Condensate Drainage

Furnace combustion can be affected if a furnace is holding condensate. Check for proper connections of drain hoses, make sure furnace condensate trap is clean. Make sure furnace is not improperly sloped. Make sure air conditioning coil drain is not interfering with furnace drain.

Other Causes

1. Manifold Gas Pressure must be set within the range stated on the furnace rating plate.
2. Remove Draft Inducer, Check the integrity of the gasket between the inducer and the collector box cover, any air leak here will have a negative effect on combustion. Check the orifice hole in the collector box, it must be free of burrs on both sides.
3. Make sure the field installed gas line is not binding and causing distortion of burner assembly
4. If the furnace is installed as a one pipe system; make sure the surrounding area and structure are adequate to provide combustion air
5. Make sure there are no cabinet air leaks allowing supply air to affect combustion
6. If heat exchanger integrity is uncertain, follow procedures in Service Bulletin SF-041

MAINTENANCE

WARNING

HIGH VOLTAGE
DISCONNECT ALL POWER BEFORE SERVICING OR INSTALLING THIS UNIT. MULTIPLE POWER SOURCES MAY BE PRESENT. FAILURE TO DO SO MAY CAUSE PROPERTY DAMAGE, PERSONAL INJURY OR DEATH.

CAUTION

IF YOU MUST HANDLE THE ITNITOR, HANDLE WITH CARE. TOUCHING THE IGNITOR BODY WITH BARE FINGERS, ROUGH HANDLING, OR VIBRATION COULD RESULT IN EARLY IGNITOR FAILURE. ONLY A QUALIFIED SERVICER SHOULD EVER HANDLE THE IGNITOR.

ANNUAL INSPECTION

The furnace should be inspected by a qualified installer, or service agency at least once per year. This check should be performed at the beginning of the heating season. This will ensure that all furnace components are in proper working order and that the heating system functions appropriately. Pay particular attention to the following items. Repair or service as necessary.

- •Flue pipe system. Check for blockage and/or leakage. Check the outside termination and the connections at and internal to the furnace.
- •Heat exchanger. Check for corrosion and/or buildup within the heat exchanger passageways.
- •Burners. Check for proper ignition and flame sense.
- •Wiring. Verify that electrical connections are tight and free from corrossion.
- •Filters.

AIR FILTER

WARNING

NEVER OPERATE FURNACE WIHTOUT A FILTER INSTALLED AS DUST AND LINT WILL BUILD UP ON INTERNAL PARTS RESULTING IN LOSS OF EFFICIENCY, EQUIPMENT DAMAMGE, AND POSSIBLE FIRE.

Filters must be used with this furnace. Filters do not ship with these furnaces but must be provided by the installer for proper furnace operation.

Dirty filters are the most common cause of inadequate heating or cooling performance.

WARNING

HIGH VOLTAGE
DISCONNECT ALL POWER BEFORE SERVICING, REMOVING THE FILTER OR PREFORING ANY OTHER MAINTENEACE. MULTIPLE POWER SOURCES MAY BE PRESENT. FAILURE TO DO SO MAY CAUSE PROPERTY DAMAGE, PERSONAL INJURY OR DEATH.

Maintenance

Improper filter maintenance is the most common cause of inadequate heating or cooling performance. Filters should be cleaned (permanent) or replaced (disposable) every two months or as required.

Horizontal Unit Filter Removal

Filters in horizontal installations are located in the central return register.

INDUCED DRAFT AND CIRCULATION BLOWERS

The bearings in the induced draft blower and circulator blower motors are permanently lubricated by the manufacturer. No further lubrication is required. Check motor windings for accumulation of dust which may cause overheating. Clean as necessary.

FLAME SENSOR (QUALIFIED SERVICER ONLY)

Under some conditions, the fuel or air supply can create a nearly invisible coating on the flame sensor. This coating acts as an insulator, causing a drop in the flame sensing signal. If this occurs, a qualified servicer must carefully clean the flame sensor with steel wool. After cleaning, the flame sensor output should be as listed on the specification sheet.

The following is a must for every service technician and service shop.

1. Dial type thermometers or thermocouple meter (optional) - to measure dry bulb temperature.
2. Volt Ohm Meter - to measure amperage and voltage and to test continuity, capacitors and motor windings.
3. Manometer - to measure static pressure, pressure drop across coils, filters and draft and to measure gas inlet and manifold pressure.

Other recording type instruments can be essential in solving abnormal problems, however, in many instances they may be rented from local sources.

Proper equipment promotes faster, more efficient service and accurate repairs resulting in fewer call backs.

HEATING PERFORMANCE TEST

Before attempting to diagnose an operating fault, run a heating performance test and apply the results to the *Service Problem Analysis Guide.*

To conduct a heating performance test, the BTU input to the furnace must be calculated.

After the heating cycle has been in operation for at least fifteen minutes and with all other gas appliances turned off, the gas meter should be clocked.

MAINTENANCE

To find the BTU input, multiply the number of cubic feet of gas consumed per hour by the heating value of the gas being used. (The calorific value of the gas being used is found by contacting your local utility.)

EXAMPLE: It is found by the gas meter, that it takes forty (40) seconds for the hand on the cubic foot dial to make one complete revolution, with all appliances off, except the furnace. Take this information and locate it on the gas rate chart. Observe the forty (40) seconds, locate and read across to the one (1) cubic foot dial column. There we find the number 90, which shows that ninety (90) cubic feet of gas will be consumed in one (1) hour.

Let's assume the local gas utility has stated that the calorific value of the gas is 1,025 BTU per cubic foot.

Multiplying the ninety (90) cubic feet by 1,025 BTU per cubic foot gives us an input of 92,250 BTUH.

Checking the BTU input on the rating plate of the furnace being tested.

EXAMPLE:

INPUT: 92,000 BTU/HR

OUTPUT CAP: 84,000

Should the figure you calculated not fall within five (5) percent of the nameplate rating of the unit, adjust the gas valve pressure regulator or resize orifices.

CAUTION

ALWAYS CONNECT A MANOMETER TO THE OUTLET TAP AT THE GAS VALVE BEFORE ADJUSTING THE PRESSURE REGULATOR. IN NO CASE SHOULD THE FINAL MANIFOLD PRESSURE VARY MORE THAN PLUS OR MINUS .2 INCHES WATER COLUMN FROM 3 INCHES WATER COLUMN FOR NATURAL GAS.

To adjust the pressure regulator on the gas valve, turn down (clockwise) to increase pressure and input, and out (counterclockwise) to decrease pressure and input.

A properly operating unit must have the BTU per hour input and CFM of air, within the limits shown to prevent short cycling of the equipment. As the external static pressure goes up, the temperature rise will also increase. Consult the proper tables for temperature rise limitation.

DM96SE0403BU AA	1 - 16 X 25 Side or 1 - 16 X 25 Bottom Return
DM96SE0603BU AA	1 - 16 X 25 Side or 1 - 16 X 25 Bottom Return
DM96SE0805CU AA	2 - 16 X 25 Side or 1 - 20 X 25 Bottom Return

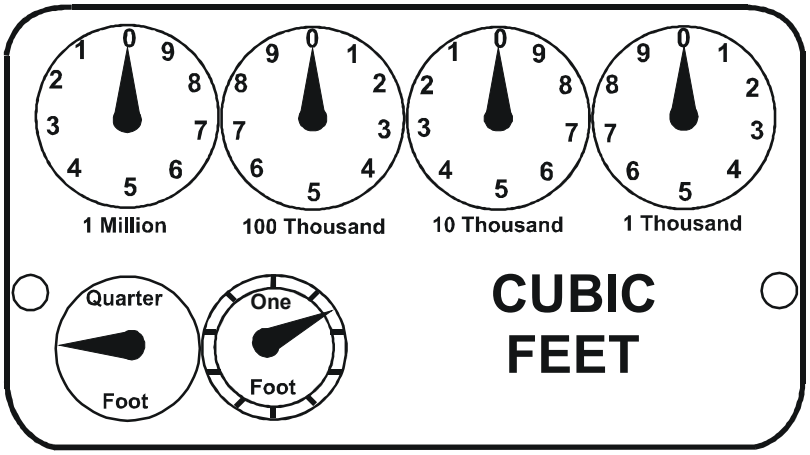

GAS RATE -- CUBIC FEET PER HOUR											
Seconds for One Revolution	Size of Test Dial					Seconds for One Revolution	Size of Test Dial				
	1/4 cu/ft	1/2 cu/ft	1 cu/ft	2 cu/ft	5 cu/ft		1/4 cu/ft	1/2 cu/ft	1 cu/ft	2 cu/ft	5 cu/ft
10	90	180	360	720	1800	36	25	50	100	200	500
11	82	164	327	655	1636	37	--	--	97	195	486
12	75	150	300	600	1500	38	23	47	95	189	474
13	69	138	277	555	1385	39	--	--	92	185	462
14	64	129	257	514	1286	40	22	45	90	180	450
15	60	120	240	480	1200	41	--	--	--	176	439
16	56	113	225	450	1125	42	21	43	86	172	429
17	53	106	212	424	1059	43	--	--	--	167	419
18	50	100	200	400	1000	44	--	41	82	164	409
19	47	95	189	379	947	45	20	40	80	160	400
20	45	90	180	360	900	46	--	--	78	157	391
21	43	86	171	343	857	47	19	38	76	153	383
22	41	82	164	327	818	48	--	--	75	150	375
23	39	78	157	313	783	49	--	--	--	147	367
24	37	75	150	300	750	50	18	36	72	144	360
25	36	72	144	288	720	51	--	--	--	141	355
26	34	69	138	277	692	52	--	--	69	138	346
27	33	67	133	265	667	53	17	34	--	136	340
28	32	64	129	257	643	54	--	--	67	133	333
29	31	62	124	248	621	55	--	--	--	131	327
30	30	60	120	240	600	56	16	32	64	129	321
31	--	--	116	232	581	57	--	--	--	126	316
32	28	56	113	225	563	58	--	31	62	124	310
33	--	--	109	218	545	59	--	--	--	122	305
34	26	53	106	212	529	60	15	30	60	120	300
35	--	--	103	206	514						

Component I.D.

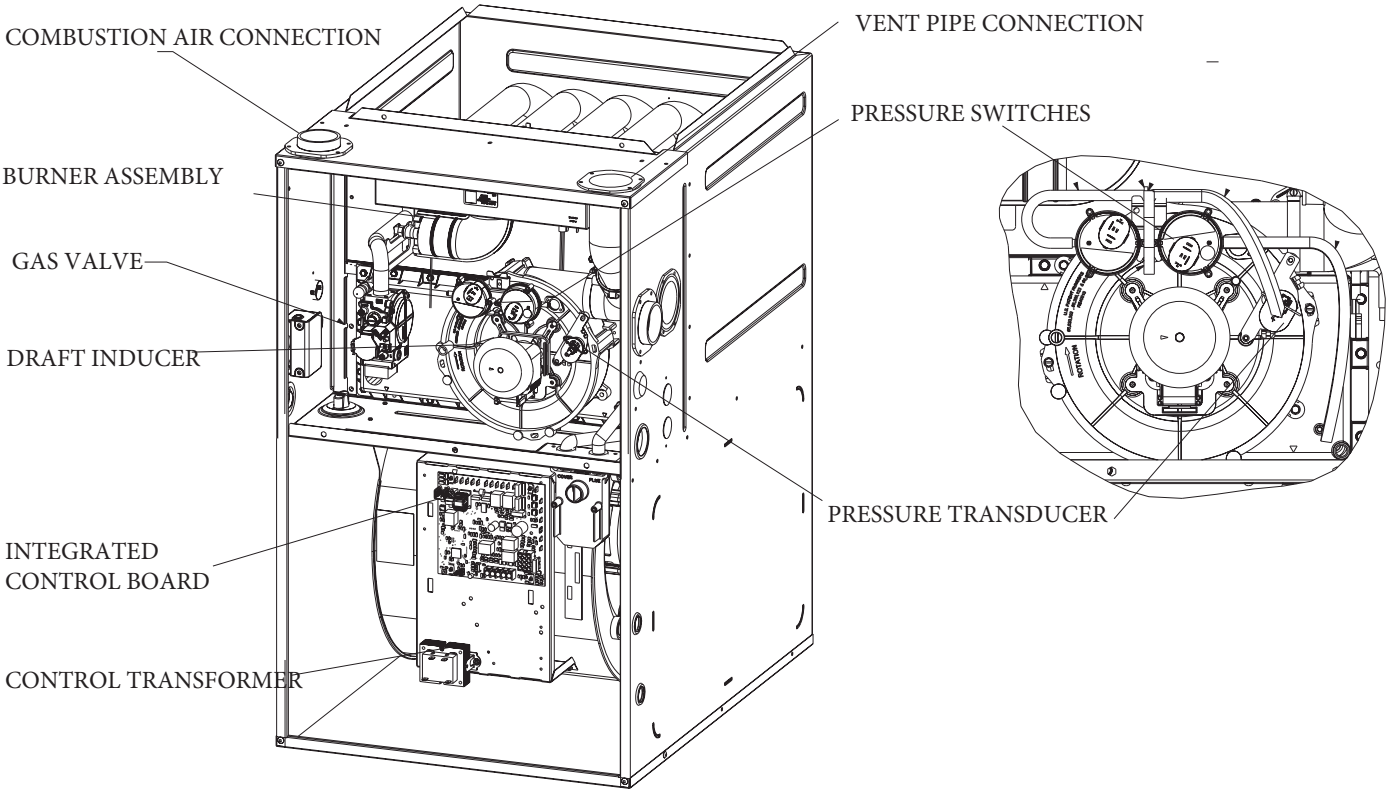

SERVICING

CHECKING VOLTAGE

WARNING

HIGH VOLTAGE
DISCONNECT **ALL** POWER BEFORE SERVICING OR CHANGING ANY ELECTRICAL WIRING. MULTIPLE POWER SOURCES MAY BE PRESENT. FAILURE TO DO SO MAY CAUSE PROPERTY DAMAGE, PERSONAL INJURY OR DEATH.

1. Remove the burner door to gain entry to the Junction Box.
2. Remove cover from the Junction Box and gain access to incoming power lines.

With Power ON:

WARNING

LINE VOLTAGE NOW PRESENT

3. Using a voltmeter, measure the voltage across the hot and neutral connections.

NOTE: To energize the furnace, the Door Interlock Switch must be engaged at this point.

4. No reading - indicates open wiring, open fuse, no power, or faulty Door Interlock Switch from unit to fused disconnect service. Repair as needed.
5. With ample voltage at line voltage connectors, energize the furnace blower motor by jumpering terminals R to G on the integrated ignition control.
6. With the blower motor in operation, the voltage should be 115 volts ± 10 percent.
7. If the reading falls below the minimum voltage, check the line wire size. Long runs of undersized wire can cause low voltage. If wire size is adequate, notify the local power company of the condition.
8. After completing check and/or repair, replace Junction Box cover and reinstall the service panel doors.
9. Turn on electrical power and verify proper unit operation.

CHECKING WIRING

WARNING

DISCONNECT **ALL** POWER BEFORE SERVICING.

1. Check wiring visually for signs of overheating, damaged insulation and loose connections.
2. Use an ohmmeter to check continuity of any suspected open wires.
3. If any wires must be replaced, replace with AWM, 105°C. 2/64 thick insulation of the same gauge or its equivalent.

CHECKING THERMOSTAT, WIRING AND ANTICIPATOR

THERMOSTAT AND WIRING

WARNING

DISCONNECT **ALL** POWER BEFORE SERVICING.

1. Remove the blower compartment door to gain access to the thermostat low voltage wires located at the furnace integrated control module terminals.
2. Remove the thermostat low voltage wires at the furnace control panel terminal board.
3. Jumper terminals R to W on the integrated ignition control.

With Power On (and Door Interlock Switch closed):

WARNING

LINE VOLTAGE NOW PRESENT

4. Induced Draft Motor must run and pull in pressure switch.
5. If the hot surface ignitor heats and at the end of the ignitor warm-up period the gas valve opens and the burners ignite, the trouble is in the thermostat or wiring.
6. With power off, check the continuity of the thermostat and wiring. Repair or replace as necessary.

If checking the furnace in the air conditioning mode, proceed as follows.

7. With power off, Jumper terminals R to Y to G.
8. Turn on the power.
9. If the furnace blower motor starts and the condensing unit runs, then the trouble is in the thermostat or wiring. Repair or replace as necessary.
10. After completing check and/or repair of wiring and check and/or replacement of thermostat, reinstall blower compartment door.
11. Turn on electrical power and verify proper unit operation.

CHECKING TRANSFORMER AND CONTROL CIRCUIT

A step-down transformer 120 volt primary to 24 volt secondary, 40 VA (Heating and Cooling Models) supplies ample capacity of power for either operation.

SERVICING

WARNING

HIGH VOLTAGE
DISCONNECT ALL POWER BEFORE SERVICING OR CHANGING ANY ELECTRICAL WIRING. MULTIPLE POWER SOURCES MAY BE PRESENT. FAILURE TO DO SO MAY CAUSE PROPERTY DAMAGE, PERSONAL INJURY OR DEATH.

1. Remove blower compartment door to gain access to the thermostat low voltage wires located at the furnace integrated control module.
2. Remove the thermostat low voltage wires at the furnace integrated control module terminals.

With Power On (and Door Interlock Switch closed):

WARNING

LINE VOLTAGE NOW PRESENT

3. Use a voltmeter, check voltage across terminals R and C. Must read 24 VAC.
4. No voltage indicates faulty transformer, open fuse, bad wiring, bad splice, or open door interlock switch.
5. Check transformer primary voltage at incoming line voltage connections, fuse, splices, and blower door interlock switch.
6. If line voltage is available to the primary side of transformer and not at secondary side, the transformer is inoperative. Replace.
7. After completing check and/or replacement of transformer and check and/or repair of control circuit, reinstall blower compartment door.
8. Turn on electrical power and verify proper unit operation.

CHECKING AIR CIRCULATOR BLOWER MOTOR

WARNING

DISCONNECT ALL POWER BEFORE SERVICING.

1. Remove blower compartment door to gain access to the circulator blower motor and integrated ignition control.
2. Disconnect the motor wire leads from its connection point at the integrated ignition control module and capacitor if applicable.
3. Using a ohmmeter, test for continuity between each of the motor leads.
4. Touch one probe of the ohmmeter to the motor frame (ground) and the other probe in turn to each lead.

If the windings do not test continuous or a reading is obtained to ground, replace the motor.

5. After completing check and/or replacement of circulator blower motor or induced draft blower motor, reinstall blower compartment door.
6. Turn on electrical power and verify proper unit operation.

WARNING

DISCONNECT ALL POWER BEFORE SERVICING.

CHECKING DUCT STATIC

The maximum and minimum allowable external static pressures are found in the specification section. These tables also show the amount of air being delivered at a given static by a given motor speed or pulley adjustment.

The furnace motor cannot deliver proper air quantities (CFM) against statics other than those listed.

Too great of an external static pressure will result in insufficient air that can cause excessive temperature rise, resulting in limit tripping, etc. Whereas not enough static may result in motor overloading.

To determine proper air movement, proceed as follows:

1. With clean filters in the furnace, use a manometer to measure the static pressure of the return duct at the inlet of the furnace. (Negative Pressure)
2. Measure the static pressure of the supply duct. (Positive Pressure)
3. Add the two (2) readings together for total external static pressure.

NOTE: Both readings may be taken simultaneously and read directly on the manometer if so desired. If an air conditioner coil or Electronic Air Cleaner is used in conjunction with the furnace, the readings must also include theses components, as shown in the following drawing.

4. Consult proper tables for the quantity of air.

If the total external static pressure exceeds the minimum or maximum allowable statics, check for closed dampers, registers, undersized and/or oversized poorly laid out duct work.

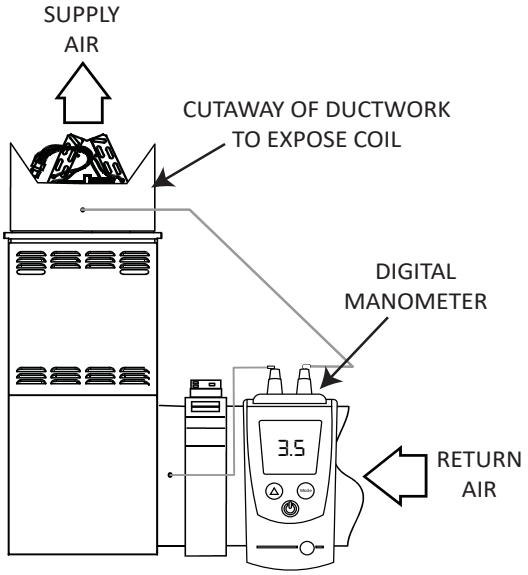

Checking Static Pressure

CHECKING TEMPERATURE RISE

The more air (CFM) being delivered through a given furnace, the less the rise will be; so the less air (CFM) being delivered, the greater the rise. The temperature rise should be adjusted in accordance to a given furnace specifications and its external static pressure. An incorrect temperature rise may result in condensing in or overheating of the heat exchanger. An airflow and temperature rise table is provided in the blower performance specification section. Determine and adjust temperature rise as follows:

1. Operate furnace with burners firing for approximately ten minutes. Check BTU input to furnace - do not exceed input rating stamped on rating plate. Ensure all registers are open and all duct dampers are in their final (fully or partially open) position.
2. Place thermometers in the return and supply ducts as close to the furnace as possible. Thermometers must not be influenced by radiant heat by being able to “see” the heat exchanger.

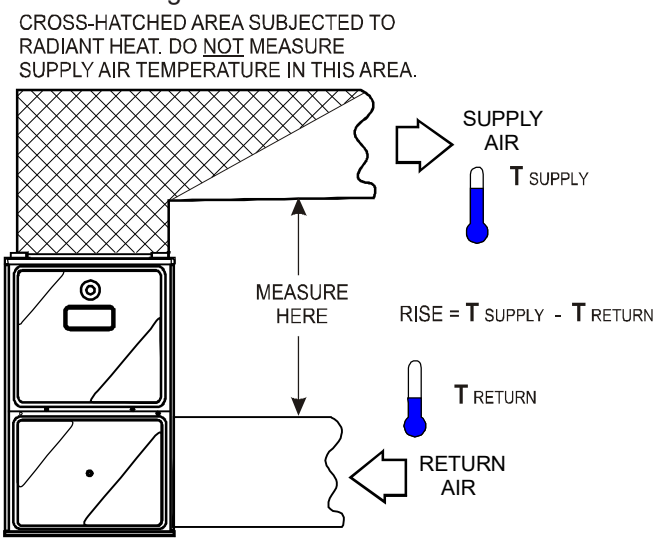

Checking Temperature Rise

3. Subtract the return air temperature from the supply air temperature to determine the air temperature rise. Allow adequate time for thermometer readings to stabilize.
4. Adjust temperature rise by adjusting the circulator blower speed. Increase blower speed to reduce temperature rise. Decrease blower speed to increase temperature rise. Refer to *Circulator Blower Speed* section in the Product Design section of this manual for speed changing details. Temperature rise is related to the BTUH output of the furnace and the amount of air (CFM) circulated over the heat exchanger. Measure motor current draw to determine that the motor is not overloaded during adjustments.

CHECKING PRIMARY LIMIT CONTROL

All use a nonadjustable, automatic reset, bi-metal type limit control.

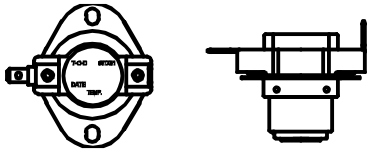

Style 1

WARNING

HIGH VOLTAGE

DISCONNECT ALL POWER BEFORE SERVICING OR CHANGING ANY ELECTRICAL WIRING. MULTIPLE POWER SOURCES MAY BE PRESENT. FAILURE TO DO SO MAY CAUSE PROPERTY DAMAGE, PERSONAL INJURY OR DEATH.

1. Remove burner compartment door to gain access to the primary limit.
2. Remove low voltage wires at limit control terminals.
3. With an ohmmeter, test between these two terminals as shown in the following drawing. The ohmmeter should read continuous unless heat exchanger temperature is above limit control setting. If not as above, replace the control.

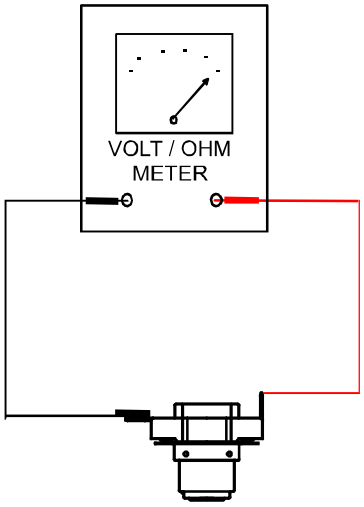

Testing Primary Limit Control

CHECKING AUXILIARY LIMIT CONTROL

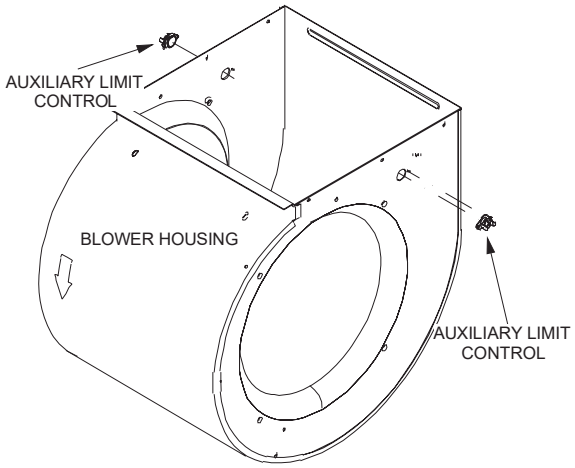

Auxiliary Limit Control Location

WARNING

HIGH VOLTAGE
DISCONNECT ALL POWER BEFORE SERVICING OR INSTALLING THIS UNIT. MULTIPLE POWER SOURCES MAY BE PRESENT. FAILURE TO DO SO MAY CAUSE PROPERTY DAMAGE, PERSONAL INJURY OR DEATH.

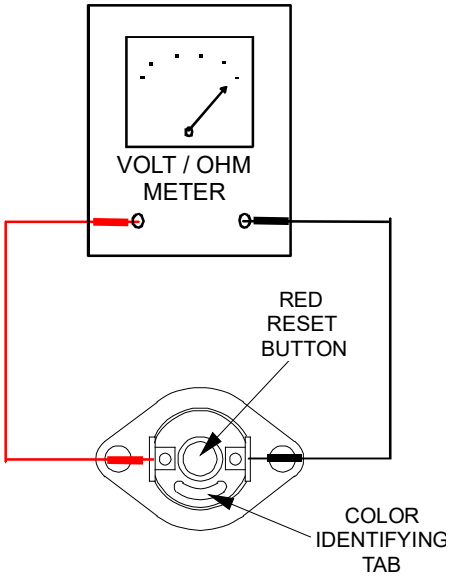

Testing Auxiliary Limit Control

WARNING

TO AVOID POSSIBLE FIRE, ONLY RESET THE AUXILIARY LIMIT CONTROL ONCE. IF IT SHOULD OPEN A SECOND TIME, A QUALIFIED SERVICER MUST DETERMINE WHY THE AUXILIARY LIMIT OPENED BEFORE RESETTING AGAIN.

INDUCED DRAFT BLOWER MOTOR DM96SE*U

WARNING

HIGH VOLTAGE
DISCONNECT ALL POWER BEFORE SERVICING OR INSTALLING THIS UNIT. MULTIPLE POWER SOURCES MAY BE PRESENT. FAILURE TO DO SO MAY CAUSE PROPERTY DAMAGE, PERSONAL INJURY OR DEATH.

1. Remove burner compartment door to gain access to the induced draft blower motor.
2. Disconnect the motor wire leads from its connection point at the induced draft motor.
3. Using a ohmmeter, test for continuity between each of the motor leads.
4. Touch one probe of the ohmmeter to the motor frame (ground) and the other probe in turn to each lead.

   If the windings do not test continuous or a reading is obtained to ground, replace the motor.

5. If the windings have a continuity reading, reconnect wires. Turn power on to the furnace and turn the thermostat on in the heating mode. Check voltage for 115V at the induced draft motor terminals during the trial for ignition. If you have 115V and the motor does not run, replace the induced draft motor.
6. After completing check and/or replacement of induced draft motor, reinstall burner compartment door.
7. Turn on electrical power and verify proper unit operation.

INDUCED DRAFT BLOWER MOTOR DM96SN*U

WARNING

HIGH VOLTAGE
DISCONNECT ALL POWER BEFORE SERVICING OR INSTALLING THIS UNIT. MULTIPLE POWER SOURCES MAY BE PRESENT. FAILURE TO DO SO MAY CAUSE PROPERTY DAMAGE, PERSONAL INJURY OR DEATH.

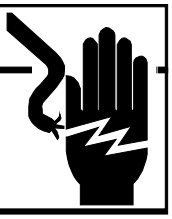

The induced draft assembly uses a three phase motor to draw flue gases through the heat exchanger.The inducer uses ball bearings and is permanently lubricated. This motor is driven at varying speeds by the VFD (variable frequency drive) section of the IFC. The IFC takes typical single phase power supplied to the furnace and converts it to a three phase supply to operate the draft inducer at the desired speed. The windings of the induced draft motor will have equal resistance +/- 5%. Normal resistance readings at room temperature will range from 14-17 ohms. The voltage supplied by the IFC to drive the induced draft blower will vary from 15-110 volts A/C between any two windings. This would be read between any two of the three power wires between the IFC and the induced draft blower. This voltage to the IBD will vary between furnace models and is dependent on what percentage of maximum fire is being called for. The power wires are colored red, white, and black. A green colored ground wire is also present.

CHECKING GAS VALVE (REDUNDANT)

A combination redundant operator type gas valve which provides all manual and automatic control functions required for gas fired heating equipment is used.

The valve provides control of main burner gas flow, pressure regulation, and 100 percent safety shut-off.

WARNING

DISCONNECT ALL POWER BEFORE SERVICING

Single stage gas valves should be tested on the furnance with 24 VAC connected to the gas valve and manometers reading supply line and manifold pressures.

WARNING

DISCONNECT ALL GAS AND ELECTRICAL POWER SUPPLY.

Orifices should be treated with care in order to prevent damage. They should be removed and installed with a box-end wrench in order to prevent distortion. In no instance should an orifice be peened over and redrilled. This will change the angle or deflection of the vacuum effect or entraining of primary air, which will make it difficult to adjust the flame properly. This same problem can occur if an orifice spud of a different length is substituted.

WARNING

DISCONNECT ALL GAS AND ELECTRICAL POWER SUPPLY.

CHECKING GAS PRESSURE

Gas Supply Pressure Measurement

CAUTION

TO PREVENT UNRELIABLE OPERATION OR EQUIPMENT DAMAGE, THE INLET GAS SUPPLY PRESSURE MUST BE AS SPECIFIED ON THE UNIT RATING PLATE WITH ALL OTHER HOUSEHOLD GAS FIRED APPLIANCES OPERATING.

Gas inlet and manifold pressures should be checked and adjusted in accordance to the type of fuel being consumed.

The line pressure supplied to the gas valve must be within the range specified below. The supply pressure can be measured at the gas valve inlet pressure tap or at a hose fitting installed in the gas piping drip leg. The supply pressure must be measured with the burners operating. To measure the gas supply pressure, use the following procedure.

WARNING

DISCONNECT ELECTRICAL POWER AND SHUT OFF GAS SUPPLY.

1. After turning off gas to furnace at the manual gas shutoff valve external to the furnace, remove burner compartment door to gain access to the gas valve.
2. Connect a calibrated manometer (or appropriate gas pressure gauge) at either the gas valve inlet pressure tap or the gas piping drip leg as shown in the following figures. Refer to *Measuring Gas Pressure: Single Stage Valves* figure for single stage valve inlet pressure tap connections.

NOTE: At either location, a hose fitting must be installed prior to making the hose connection.

NOTE: Use apapter kit #0151K00000S to measure gas pressure on White-Rodgers 36J22 gas valves.

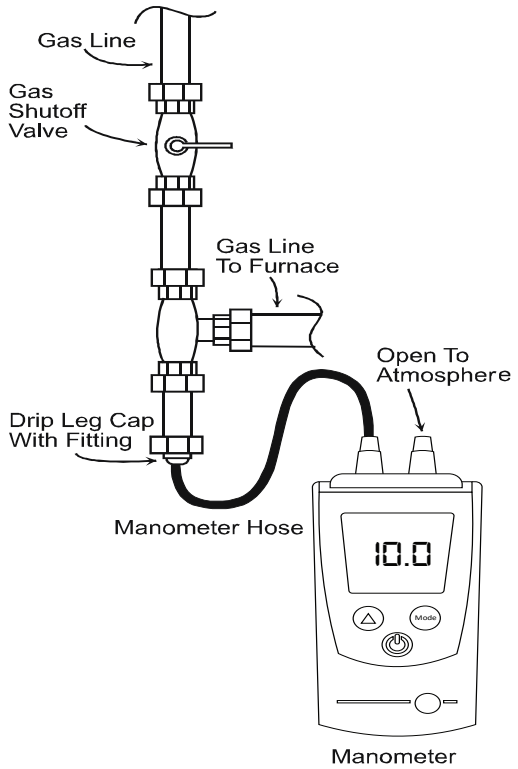

Measuring Inlet Gas Pressure (Alternate Method)

3. Turn ON the gas and electrical power supply and operate the furnace and all other gas consuming appliances on the same gas supply line.
4. Measure furnace gas supply pressure with burners firing. Supply pressure must be within the range specified in the following table.

INLET GAS SUPPLY PRESSURE		
Natural Gas	Minimum: 4.5" w.c.	Maximum: 10.0" w.c.

If supply pressure differs from above, make necessary adjustments to pressure regulator, gas piping size, etc., and/or consult with local gas utility.

⚠ WARNING

HIGH VOLTAGE
DISCONNECT **ALL** ELECTRICAL POWER AND SHUT OFF GAS SUPPLY BEFORE SERVICING OR INSTALLING THIS UNIT.
MULTIPLE POWER SOURCES MAY BE PRESENT. FAILURE TO DO SO MAY CAUSE PROPERTY DAMAGE, PERSONAL INJURY OR DEATH.

5. Disconnect manometer after turning off gas at manual shutoff valve. Reinstall plug before turning on gas to furnace.
6. Turn OFF any unnecessary gas appliances started in step 3.
7. Turn on gas to furnace and check for leaks. If leaks are found, repair and then reinstall burner compartment door.
8. Turn on electrical power and verify proper unit operation.

Gas Manifold Pressure Measurement and Adjustment

⚠ CAUTION

TO PREVENT UNRELIABLE OPERATION OR EQUIPMENT DAMAGE, THE GAS MANIFOLD PRESSURE MUST BE AS SPECIFIED ON THE UNIT RATING PLATE. ONLY MINOR ADJUSTMENTS SHOULD BE MADE BY ADJUSTING THE GAS VALVE PRESSURE REGULATOR.

NOTE: Use apapter kit #0151K00000S to measure gas pressure on White-Rodgers 36J22 gas valves.

Only small variations in gas pressure should be made by adjusting the gas valve pressure regulator. The manifold pressure must be measured with the burners operating. To measure and adjust the manifold pressure, use the following procedure.

⚠ WARNING

HIGH VOLTAGE
DISCONNECT **ALL** ELECTRICAL POWER AND SHUT OFF GAS SUPPLY BEFORE SERVICING OR INSTALLING.

1. After turning off gas to furnace at the manual gas shutoff valve external to the furnace, remove burner compartment door to gain access to the gas valve.
2. Connect a calibrated water manometer (or appropriate gas pressure gauge) at the gas valve outlet pressure tap. Refer to *Measuring Gas Pressure: Single Stage Valves* figure for single stage valve outlet pressure tap connections.

⚠ WARNING

LINE VOLTAGE NOW PRESENT

3. Turn ON the gas and electrical power supply and operate the furnace.
4. Measure gas manifold pressure with burners firing. Adjust manifold pressure using the table below.

Manifold Gas Pressure	
Natural Gas	2.8 -3.2" w.c.

The final manifold pressure must not vary from the above specified pressures. Any necessary major changes in gas flow rate should be made by changing the size of the burner orifice.

5. White-Rodgers 36J22 Valves:
   a. Back outlet pressure test screw (inlet/outlet pressure boss) out one turn (counterclockwise, not more than one turn).
   b. Attach a hose and manometer to the outlet pressure outlet pressure boss.
   c. Turn ON the gas supply.

d. Turn on power and close thermostat “R” and “W” contacts to provide a call for low stage heat.
e. Measure the gas manifold pressure with burners firing. Adjust manifold pressure using the *Manifold Gas Pressure* table shown below.
f. Remove regulator cover screw from the outlet pressure regulator adjust tower and turn screw clockwise to increase pressure or counterclockwise to decrease pressure. Replace regulator cover screw.
i. Turn off all electrical power and gas supply to the system.
j. Remove the manometer hose from the hose barb fitting or outlet pressure boss.
k. Turn outlet pressure test screw in to seal pressure port (clockwise, 7 in-lb minimum).

WARNING

HIGH VOLTAGE
DISCONNECT ALL ELECTRICAL POWER AND SHUT OFF GAS SUPPLY BEFORE SERVICING OR INSTALLING THIS UNIT. MULTIPLE POWER SOURCES MAY BE PRESENT. FAILURE TO DO SO MAY CAUSE PROPERTY DAMAGE, PERSONAL INJURY OR DEATH.

6. Turn on gas to furnace and check for leaks. If leaks are found, repair and then reinstall burner compartment door.
7. Turn on electrical power and verify proper unit operation.

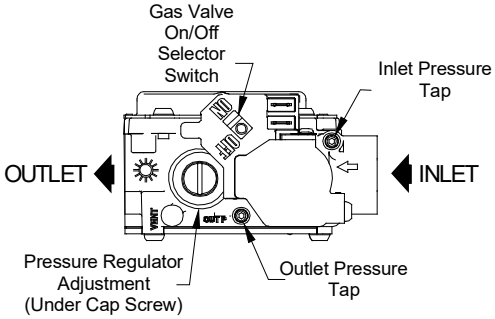

WARNING

HIGH VOLTAGE
DISCONNECT ALL ELECTRICAL POWER AND SHUT OFF GAS SUPPLY BEFORE SERVICING OR INSTALLING.

WARNING

DISCONNECT ALL POWER BEFORE SERVICING.

120V Silicon Nitride Igniter - ULN furnaces use a 120V silicone nitride igniter, part #0130F00717. The normal operating temperature is approximately 2156°F - 2678°F. At room temperature the igniter ohm reading should be from 20-100 ohms.

WARNING

LINE VOLTAGE NOW PRESENT

CHECKING PRESSURE TRANSDUCER

The pressure transducer is a pressure sensing device that allows the control to modulate the inducer motor through the heating cycle. The transducer contains electronic circuitry and must not be subjected to any voltage source other than factory wiring. Refer to the Troubleshooting chart beginning on page 16 for diagnosing suspected issues.

WARNING

HIGH VOLTAGE
DISCONNECT ALL POWER BEFORE SERVICING OR INSTALLING THIS UNIT. MULTIPLE POWER SOURCES MAY BE PRESENT. FAILURE TO DO SO MAY CAUSE PROPERTY DAMAGE, PERSONAL INJURY OR DEATH.

CHECKING FOR DELAYED IGNITION

Delayed ignition is a delay in lighting a combustible mixture of gas and air which has accumulated in the combustion chamber.

Furnace design makes this extremely unlikely unless safety controls have been by-passed or tampered with. Never by-pass or alter furnace controls.

If delayed ignition should occur, the following should be checked:

1. Improper gas pressure - adjust to proper pressure (See *CHECKING GAS PRESSURE*).

SERVICING

DM96SE*U WITH PCBBF158-160 CONTROL BOARDS

FIELD TEST MODE

Function: When the SW1 button is pressed and held until the LED is blinking in AMBER (more than 10 seconds, less than 15 seconds), the control will execute a field test mode sequence to cycle through component operation.

Operation: The control must be powered and the thermostat satisfied (no call for heat or cool). Depress and hold the SW1 button for at least 10 seconds (but not more than 15 seconds), until the LED is blinking in AMBER, then release. The control will execute the following functions:

1. Blower - "Heat" Speed 15 seconds
2. Blower - "Cool" Speed 15 seconds
3. Blower - "Fan" Speed 15 seconds
4. Hot Surface Igniter 17 seconds
5. Inducer - "Run" setting 15 seconds
6. Inducer - 1.0" w.c. 60 seconds
7. Return to OFF mode

Once the Field Test Mode is initiated, all thermostat inputs will be ignored until the field test sequence is completed. If the SW1 button is held for more than 15 seconds, the button press will be ignored and the LED display will return to its prior state.

CHECKING INTEGRATED IGNITION CONTROL BOARDS

NOTE: Failure to earth ground the furnace, reversing the neutral and hot wire connection to the line (polarity), or a high resistance connection in the neutral line may cause the control to lockout due to failure to sense flame.

WARNING

TO AVOID THE RISK OF ELECTRICAL SHOCK, WIRING TO THE UNIT MUST BE PROPERLY POLARIZED AND GROUNDED. DISCONNECT POWER BEFORE PERFORMING SERVICE LISTED BELOW.

The ground wire must run from the furnace all the way back to the electrical panel. Proper grounding can be confirmed by disconnecting the electrical power and measuring resistance between the neutral (white) connection and the burner closest to the flame sensor. Resistance should be less than 10 ohms.

The ignition control is a combination electronic and electro-mechanical device and is not field repairable. Complete unit must be replaced.

WARNING

LINE VOLTAGE NOW PRESENT

These tests must be completed within a given time frame due to the operation of the ignition control.

1. Check for 120 volts from Line 1 (Hot) to Line 2 (Neutral) at the ignition control. No voltage, check the door switch connections and wire harness for continuity.
2. Check for 24 volts from W to C terminal on the ignition control. No voltage. Check transformer, room thermostat, and wiring.

   If you have 24 volts coming off the transformer but receive approximately 13 volts on the terminal board between (C) and (R), check for blown fuse.
3. Check for 120 volts to the induced draft blower by measuring voltage between Pin 4 & 5 (black & white wire on 5 pin connector.)
4. If voltage is present in Steps 1 through 3 and the induced draft blower is operating, check for 120 volts to the ignitor during the preheat cycle.
5. After the ignitor warmup time, begin checking for 24 volts to the gas valve. Voltage will be present for seven seconds only if proof of flame has been established.

WARNING

HIGH VOLTAGE

DISCONNECT **ALL** POWER BEFORE SERVICING OR INSTALLING THIS UNIT. MULTIPLE POWER SOURCES MAY BE PRESENT. FAILURE TO DO SO MAY CAUSE PROPERTY DAMAGE, PERSONAL INJURY OR DEATH.

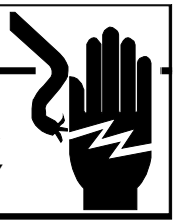

1. Disconnect the yellow flame sensor wire from the sensor
2. Connect a micro-amp meter in series with this wire and the sensor terminal.
3. Place the unit into a heating cycle.

WARNING

LINE VOLTAGE NOW PRESENT

4. As soon as flame is established a micro-amp reading should be evident once proof of flame (micro-amp reading) is established, the hot surface ignitor will be de-energized.
5. The Integrated Ignition controls will have 3-10 uAmps. 1-3 uAmps is considered low and will flash 1 amber light. Anything below 1 uAmps and the unit will shut down. If the micro-amp reading is less than the minimum specified, check for high resistance wiring connections, sensor to burner gap, dirty flame sensor, or poor grounding.
6. If absolutely no reading, check for continuity on all components and if good - replace ignition control module.

NOTE: Contaminated fuel or combustion air can create a nearly invisible coating on the flame sensor. This coating works as an insulator causing a loss in the flame sense signal. If this situation occurs the flame sensor must be cleaned with steel wool.

SERVICING

DM96SN*U WITH PCBBF241 CONTROL BOARD

Control Board Main Menu

Description	Main Menu LED Display	Option Menu LED Display	Default
Idle - system awaiting input	i dl		
Display Active Alarm	Er r	chart for alarm code definition	
Display Last 6 Faults	L6F		
Code Release Number	Cr	None	
Shared Data Revision	Sr	None	
Reset to Factory Default	r Fd	Yes / No	
Outdoor Setting Menu	OdS	AC1 / AC2 / HP1 / HP2 / OFF	OFF
Blower Speed for Continuous Fan Mode	FSd	F01 - F09	F01
Blower Speed for 1st Stage Compressor Mode	AC1	F01 - F09	Model specific
Blower Speed for 2nd Stage Compressor Mode	AC2	F01 - F09	Model specific
Cooling Fan Off Delay	CFd	0 - 120 seconds	65 seconds
Cooling Fan On Delay	Cnd	0 - 35 seconds	7 seconds
Blower Speed for Gas Heat Mode	gAF	Allowable speeds Fxx	Model specific
Gas Heat Off Delay	gFd	30 - 120 seconds	90 seconds
Gas Heat On Delay - locked	gnd	None	5 seconds
Blower Speed for 1st Stage HP Heat Mode	HP1	F01 - F09	Model specific
Blower Speed for 2nd Stage HP Heat Mode	HP2	F01 - F09	Model specific
HP Heat Off Delay	HFd	30 - 120 seconds	60 seconds
HP Heat On Delay	Hnd	5 - 30 seconds	5 seconds

Control Board Status Menu

LED Display	Description of System Status
888	All segments illuminated = control powering up
I DL	Idle
FAn	Constant Fan
1AC	Low Stage Cooling
2AC	High Stage Cooling
1AC	Compressor Heat, Low Stage
2AC	Compressor Heat, High Stage
gH	Gas Heat
1HP	Low Stage HP
2HP	High Stage HP
dFt	Defrost

Furnace Status	LED Code[1]	Fault Description(s)	Possible Causes	Corrective Action	Cautions & Notes
• Furnace fails to operate. • Control LED is off.	· **None**	• No 120-volt power to furnace or 24-volt power to integrated control module. · Integrated control has an internal fault.	• Manual disconnect switch OFF, door switch open, or 24-volt wires improperly connected or loose. • Bad integrated control module.	• Assure 120- and 24-volt power to furnace integrated control module. • Check for possible shorts in 120- and 24-volt circuits. Repair as necessary. • Replace bad control module.	• Turn power OFF prior to repair. • Read precautions in “Electrostatic Discharge” section of manual.
• Furnace fails to operate. • Control LED is flashing **ONE (1) RED** flash.	☼ 1 Flash **RED**	• Furnace lockout due to an excessive number of ignition attempts. (3 total retries)[2]	• Failure to establish flame maybe due to no gas to burner, bad igniter or igniter alignment, improper orifices, or coated/oxidized or improperly connected or shorted flame sensor. • Loss of flame after establishment maybe due to interrupted gas supply, lazy burner flames (improper gas pressure or restriction in flue or improper induced draft blower performance). • Improperly connected igniter or bad igniter or ground connection to unit or burner. • Faulty integrated control.	• Locate and correct gas interruption. • Replace bad gas valve or gas orifice size. • Check flame sense signal. Clean sensor if coated and/or oxidized. • Replace induced draft blower pressure sensor. Inspect pressure sensor hose. Repair, if necessary. Inspect flue or condensate for blockage, proper length, elbows, and termination. • Compare igniter resistance to specification. Replace igniter if necessary. • Check and correct unit ground wiring. • Replace bad control module.	• Turn power and gas OFF prior to repair. · Igniter is fragile, handle with care. • Clean flame sensor with steel wool. • Replace igniter with proper replacement part. • Read precautions in “Electrostatic Discharge” section of manual.
• Furnace Fails to operate • Control LED is flashing **TWO (2) RED** flashes.	☼ 2 Flashes **RED**	• Pressure sensor indicates pressure reading when it should be zero.	• Faulty wiring to the pressure sensor. • Faulty pressure sensor.	• Check and correct pressure sensor wiring. • Replace pressure sensor.	• Turn power OFF prior to repair. • Replace pressure sensor with proper replacement part.
• Induced draft blower runs continuously with no further furnace operation. • Control LED is flashing **THREE (3) RED** flashes.	☼ 3 Flashes **RED**	• Inducer not making pressure setting. • Induced draft blower is operating properly.	• Pressure sensor hoses blocked, pinched or connected improperly. Bad wire connection. • Blocked intake, flue or weak induced draft blower.	• Replace induced draft blower pressure sensor and hoses. Replace with proper parts. • Check wiring connections. • Inspect intake and flue for blockage, proper length, elbows, and termination. • Replace induced draft blower.	• Turn power OFF prior to repair. • See “Combustion and Ventilation Air Requirements” and “Category I Venting (Vertical Venting)” section for details.
• Circulator blower runs continuously. No furnace operation. • Control LED is flashing **FOUR (4) RED** flashes.	☼ 4 Flashes **RED**	• Primary limit insert; or aux limit circuit is open.	• Insufficient conditioned air over the heat exchanger. Blocked filters, restrictive ductwork, improper circulator blower speed, or failed circulator blower. •Faulty primary limit insert; or aux limit switch. • Loose or improperly connected wiring.	• Check circulator blower speed and performance. Correct speed or replace blower if necessary. • Check filters and ductwork for blockage. Clean filters or remove obstruction. • Check primary limit. • Check position of heat exchanger shield. • Check wiring connections.	· Turn power OFF prior to repair. · Replace blower with correct replacement part. · Replace primary switch insert; or aux limit with proper replacement part.
• Induced draft blower and circulator blower runs continuously. No furnace operation. • Control LED is flashing **FIVE (5) RED** flashes.	☼ 5 Flashes **RED**	• Flame sensed with no call for heat.	· Faulty integrated control module.	· Replace bad integrated control module.	· Turn power OFF prior to repair.

Furnace Status	LED Code[1]	Fault Description(s)	Possible Causes	Corrective Action	Cautions & Notes
• Furnace fails to operate. • Control LED is flashing **SIX (6) RED** flashes.	☼ 6 Flashes **RED**	• Burner temperature limit switch open.	• Excessive flame. • Blocked flue and/or air inlet pipe, or a failed induced draft blower. • Loose or improperly connected wiring. • Faulty burner temperature switch.	• Check and correct gas supply pressure. • Replace bad gas valve or gas orifice size. • Check flue and air inlet piping for blockage, proper length, elbows, and termination. • Check induced draft blower for proper performance. Replace, if necessary. • Check burner temperature switch. Replace if necessary. • Check wiring connections.	• See “Vent/Flue Pipe” section for piping details. • Replace induced draft blower with proper replacement part. • Replace burner temperature switch with correct replacement part.
• No furnace operation. • Control LED is flashing **SEVEN (7) RED** flashes.	☼ 7 Flashes **RED**	• Gas valve circuit shorted.	• Bad wiring • Faulty integrated control module.	• Inspect and replace wiring as needed. • Replace bad integrated control module.	• Turn power OFF prior to repair. • Read precautions in “Electrostatic Discharge” section of manual.
• LED is steady on	☼ Steady On **AMBER**	• OEM test mode	• N/A		
• Control LED is flashing **ONE (1) AMBER** flash.	☼ 1 Flash **AMBER**	• Low flame sense	• Flame sensor incorrectly positioned in burner flame. • Flame sensor is coated/ oxidized. • Lazy burner flame due to improper gas pressure or combustion air.	• Inspect for proper sensor alignment. • Clean flame rod. • Compare current gas pressure to rating plate info. Adjust as needed.	• Turn power OFF prior to repair. • Clean flame sensor with steel wool. • See rating plate for proper gas pressure.
• Control LED is flashing **TWO (2) AMBER** flashes.	☼ 2 Flashes **AMBER**	• ID plug failure	• Improper ID plug.	• Replace ID plug.	• Turn power OFF prior to repair.
• Control LED is flashing **THREE (3) AMBER** flashes.	☼ 3 Flashes **AMBER**	• Integrated control module fuse is blown.	• Blown fuse.	• Replace integrated control module fuse (3A).	• Turn power OFF prior to repair.
• LED is steady on	☼ Steady On **GREEN**	• Normal operation, idle/ standby.	· N/A		
• Integrated control module LED is flashing rapidly.	☼ Rapid flashes **GREEN**	• Clear error history.	· N/A	• Press and hold the SW1 button for more than 5 secs results in the display of this mode.	• Release the button while LED is flashing GREEN to clear error history.
• Integrated control module LED is flashing ONE (1) GREEN flash.	☼ 1 Flash **GREEN**	• Call for heating.	· N/A		
• Integrated control module LED is flashing **TWO (2) GREEN** flashes.	☼ 2 Flashes **GREEN**	• Call for cooling.	N/A		
• Integrated control module LED has **THREE (3) GREEN** rapid flashes.	☼ 3 Flashes **GREEN**	• Continuous fan operation.	• N/A		

• Integrated control module LED has **THREE (3) GREEN** rapid flashes.	☼ 3 Rapid Flashes **GREEN**	• ID plug installed	• N/A	• For control with unit-specific programming imbedded in the CPU, this indicates at power-up that a valid ID plug has been installed and the control will use the alternate parameters.	
• Abnormal high pitch noise during burner operation.	☼ **1 Flash GREEN**	• Abnormal combustion noise during heating.	• Insufficient combustion air or high input. · Blocked flue and/or air inlet pipe, or faulty induced draft blower or pressure sensor.	• Check and correct gas supply and manifold pressures. • Replace bad gas valve or gas orifice size. • Check flue and air inlet piping for blockage, proper length, elbows, and termination. • Check induced draft blower and pressure sensor for proper performance.	• Turn power and gas OFF prior to repair. • See “Vent/Flue Pipe” section for piping details. • Replace induced draft blower or pressure sensor with proper replacement part.

Fault Code Recall

Function: When the SW1 button is pressed momentarily, the control displays the last five (5) fault codes recorded in non-volatile memory upon demand.

Operation: Any time the control is powered, the fault code history can be retieved for display by depressing and releasing the SW1 button once (less than 5 seconds); the LED will flash the Fault Code History (up to 5 fault codes from newest to oldest.)

Fault Code Clear

Function: When the SW1 button is pressed and held for an extended period (more than 5 seconds, less than 10 seconds), the control erases the stored fault code history.

Operation: Any time the control is powered, the fault code history can be cleared by depressing and holding the SW1 button for at least 5 seconds (but not more than 10 seconds) until the LED is blinking GREEN, and then release the switch while the LED is still blinking GREEN. The fault code history will be erased.

TROUBLESHOOTING

DM96SN*U

Symptom	LED Status	Fault Description	Corrective Actions
Normal Operation	1 dL	Stand-by Mode Normal Operation	None
Furnace fails to operate	EEE	Internal Control Fault	Replace control board
Furnace fails to operate	EE0	Furnace lockout due to an excessive number of ignition “retries” (3 total) Failure to establish flame Loss of flame after establishment	Locate and correct gas interruption Replace or realign igniter Check flame sense signal, clean sensor if coated or oxidized Check flue piping for blockage, proper length, elbows, and termination Verify proper induced draft blower performance
Furnace fails to operate	EE 1	Draft Inducer pressure switch circuit is closed at start of heating cycle Draft Inducer pressure switch contacts sticking Short in pressure switch circuit wiring	Replace Draft Inducer pressure switch Repair short in wiring
Induced draft blower runs continuously with no operation	EE2	Draft Inducer pressure switch circuit is not closed Pressure switch hose blocked pinched, or connected improperly Blocked flue and/or inlet air or weak induced draft blower Incorrect pressure switch set point or malfunctioning switch contacts Loose or improperly connected wiring in high limit circuit	Inspect pressure switch hose, repair/replace if necessary Inspect flue and/or inlet air for blockage, proper length, elbows, and termination Check induced draft blower performance, correct as neccesary Check pressure switch operation, replace as needed Tighten or correct wiring connection
Circulator blower runs continuously No furnace operation	EE3	Primary limit circuit is open Insufficient conditioned air over the heat exchanger Blocked filters, restrictive ductwork, improper circulator blower speed, or failed circulator blower motor Loose or improperly connected wiring in high limit circuit	Check filters and ductwork for blockage Clean filters or remove obstruction Check circulator blower speed and performance Correct speed or replace blower motor if necessary Tighten or correct wiring connection
Induced draft blower and circulator blower runs continuously No furnace operation	EE4	Flame sensed with no call for heat Short to ground in flame sense circuit Lingering burner flame Slow closing gas valve	Correct short at flame sensor or in flame sensor wiring Check for lingering or lazy flame Verify proper operation of gas valve
No furnace operation	EE5	Open fuse Short in low voltage wiring	Replace fuse Locate and correct short in low voltage wiring
Furnace operates but shows weak flame signal fault	EE6	Flame sense micro amp signal is minimal Flame sensor is coated/oxidized Flame sensor incorrectly positioned in burner flame Lazy burner flame due to improper gas pressure or combustion air	Clean flame sensor if coated or oxidized Inspect for proper flame sensor alignment Check inlet air for blockage Compare current gas pressure to rating plate and adjust as needed
Furnace fails to operate	EE7	Problem with igniter circuit Improperly connected or shorted igniter Poor unit ground Igniter relay fault on integrated control module	Check and correct wiring from integrated control module to igniter Diagnose and replace shorted igniter as needed Verify and correct unit ground wiring if needed Check igniter output from control, replace if necessary

Symptom	LED Status	Fault Description	Corrective Actions
Furnace fails to operate	EEA	Polarity of 115 volt AC is reversed Poor unit ground	Correct polarity, check and correct wiring if necessary Verify proper ground, correct if necessary
Furnace fails to operate	EEb	Gas valve is energized when it should not be Internal gas valve error	Check wiring in gas valve circuit Replace integrated control board
Furnace fails to operate	EEC	Gas valve is not energized when it should be External Gas Valve Error	Check wiring in gas valve circuit Replace integrated control board
Furnace fails to operate	EEd	Auxiliary limit switch (blower compartment) circuit is open	Furnace power was turned off during heat cycle Blower not operating during heat Faulty aux limit or wiring
Furnace fails to operate	E 10	Grounding Error	Check grounding
Furnace fails to operate	E 11	Burner limit switch circuit is open	Check and correct gas supply pressure Check flue and air inlet for blockage, proper length, elbows, and termination Check wiring connection in limit circuit Check burner temperature switch, replace if necessary
Furnace fails to operate	E 12	Redundant relay open alarm	Replace integrated control board
Furnace fails to operate	E 13	Redundant relay stuck closed alarm	Replace integrated control board
Furnace fails to operate	EbF	Inducer communication alarm	Check Red, Black, White harness & connections to inducer & control board
Furnace fails to operate	E 1b	APS reference error	Check Red, Black, Green harness & connections to pressure sensor & control board Replace pressure sensor
Furnace fails to operate	E 1C	APS null error	Check Red, Black, Green harness & connections to pressure sensor & control board Check pressure hoses to pressure sensor and pressure switch
Furnace fails to operate	E 1d	APS span error	Check Red, Black, Green harness & connections to pressure sensor & control board Check pressure hoses to pressure sensor and pressure switch
Furnace fails to operate	E 1E	APS pressure error	Check Red, Black, Green harness & connections to pressure sensor & control board Replace pressure sensor
Furnace fails to operate	E 1F	APS input error	Check Red, Black, Green harness & connections to pressure sensor & control board Replace pressure sensor
	EEH	Twinning error	
Furnace fails to operate	EbL	Low circulator current	Check motor 120V line wire is connected to terminal inside current transformer loop Check wire connections to motor and PCB
Furnace fails to operate	EbU	Circulator current unexpected	Check motor 120V line wire is connected to terminal inside current transformer loop
Furnace fails to operate	EdO	No shared data	Populate shared data set using memory card

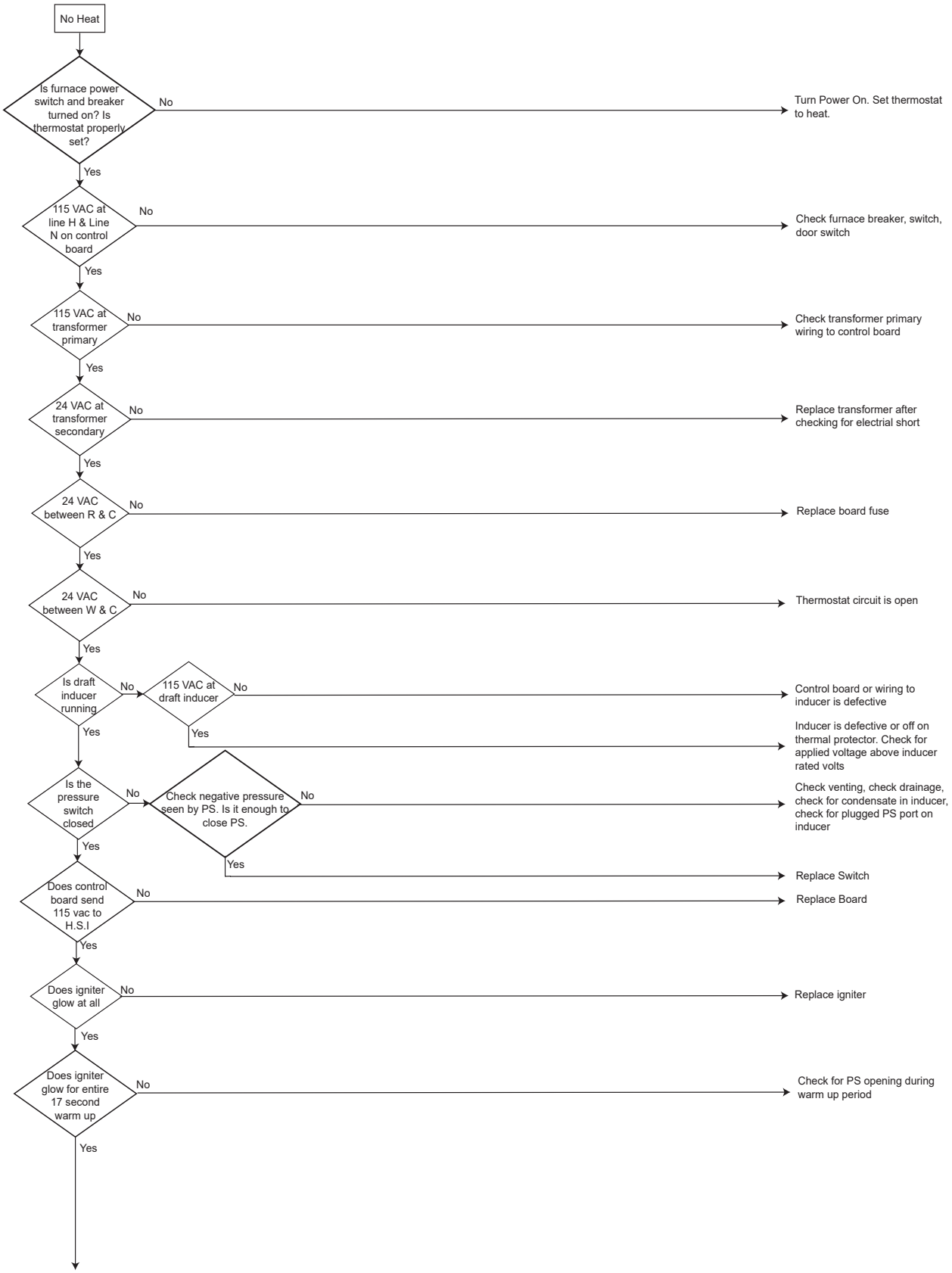
No Heat
Is furnace power switch and breaker turned on? Is thermostat properly set?
No
Turn Power On. Set thermostat to heat.
Yes
115 VAC at line H & Line N on control board
No
Check furnace breaker, switch, door switch
Yes
115 VAC at transformer primary
No
Check transformer primary wiring to control board
Yes
24 VAC at transformer secondary
No
Replace transformer after checking for electrial short
Yes
24 VAC between R & C
No
Replace board fuse
Yes
24 VAC between W & C
No
Thermostat circuit is open
Yes
Is draft inducer running
No
115 VAC at draft inducer
No
Control board or wiring to inducer is defective
Yes
Inducer is defective or off on thermal protector. Check for applied voltage above inducer rated volts
Yes
Is the pressure switch closed
No
Check negative pressure seen by PS. Is it enough to close PS.
No
Check venting, check drainage, check for condensate in inducer, check for plugged PS port on inducer
Yes
Replace Switch
Yes
Does control board send 115 vac to H.S.I
No
Replace Board
Yes
Does igniter glow at all
No
Replace igniter
Yes
Does igniter glow for entire 17 second warm up
No
Check for PS opening during warm up period
Yes

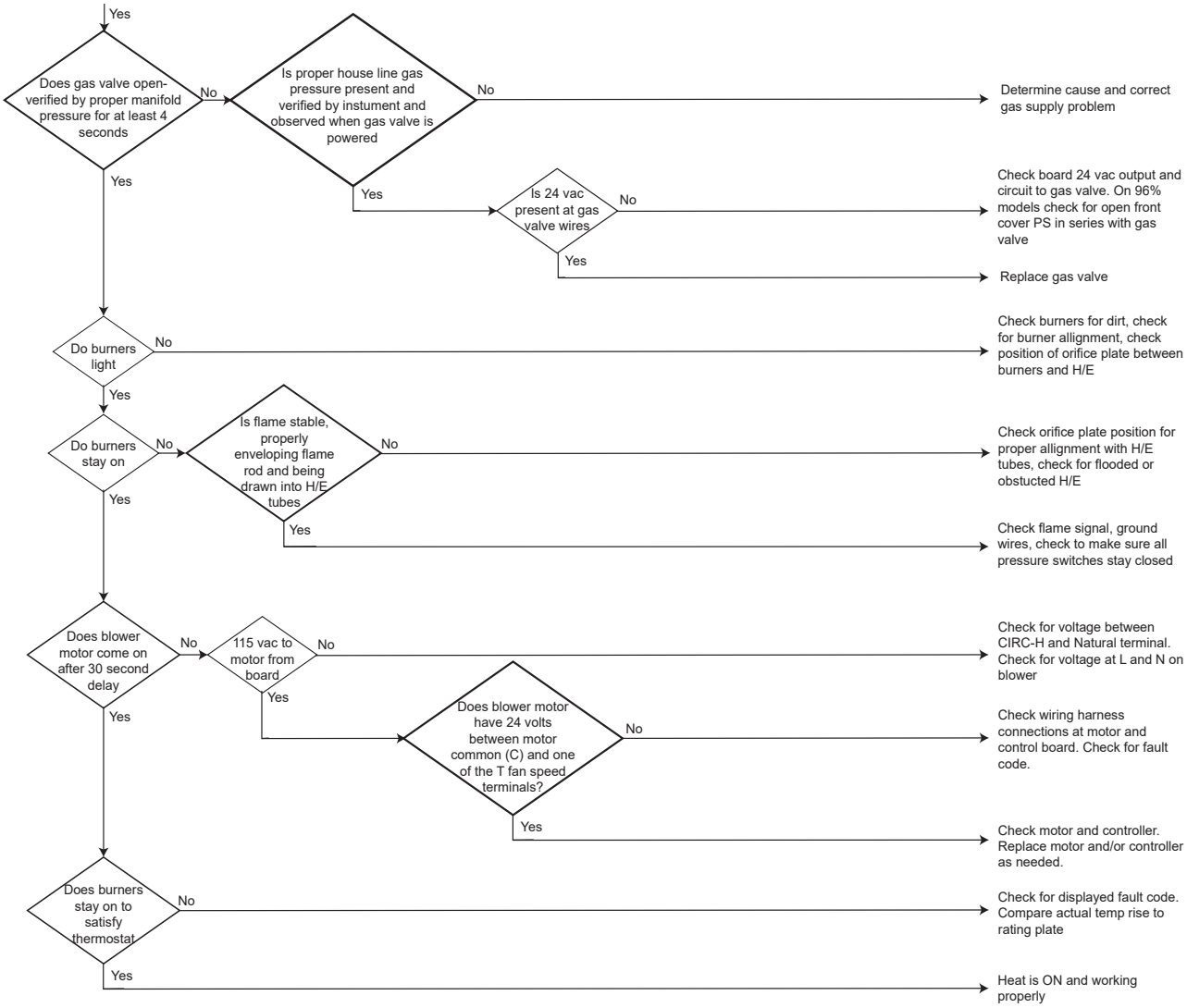
Yes
Does gas valve open-verified by proper manifold pressure for at least 4 seconds
No
Is proper house line gas pressure present and verified by instument and observed when gas valve is powered
No
Determine cause and correct gas supply problem
Yes
Yes
Is 24 vac present at gas valve wires
No
Check board 24 vac output and circuit to gas valve. On 96% models check for open front cover PS in series with gas valve
Yes
Replace gas valve
Do burners light
No
Check burners for dirt, check for burner allignment, check position of orifice plate between burners and H/E
Yes
Do burners stay on
No
Is flame stable, properly enveloping flame rod and being drawn into H/E tubes
No
Check orifice plate position for proper allignment with H/E tubes, check for flooded or obstucted H/E
Yes
Yes
Check flame signal, ground wires, check to make sure all pressure switches stay closed
Does blower motor come on after 30 second delay
No
115 vac to motor from board
No
Check for voltage between CIRC-H and Natural terminal. Check for voltage at L and N on blower
Yes
Yes
Does blower motor have 24 volts between motor common (C) and one of the T fan speed terminals?
No
Check wiring harness connections at motor and control board. Check for fault code.
Yes
Check motor and controller. Replace motor and/or controller as needed.
Does burners stay on to satisfy thermostat
No
Check for displayed fault code. Compare actual temp rise to rating plate
Yes
Heat is ON and working properly

Error Code:
E0 - Lockout due to an excessive number of ignition retries (3 total)

Applicable Models:
All 90% models

Method of Error Detection:
Furnace fails to ignite after 3 retires

Error Decision Conditions:
No gas or low gas pressure at manifold. Bad hot surface ignitor - not glowing, dirty flame sensor

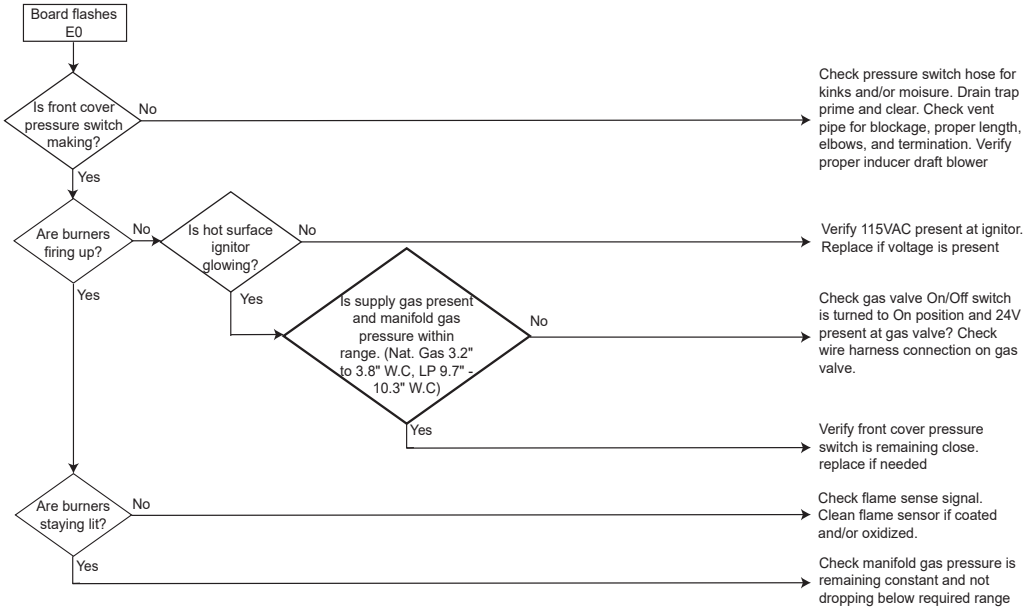

Error Code:
E1 - Pressure switch circuit closed at the start of heating cycle

E2 - Pressure switch closed circuit is not closed

Applicable Models:
(For Goodman/Amana 1-stage)
AM9S, GM9S

(For Goodman/Amana ULN)
AM9S-U, GM9S-U

(For Daikin 1-stage)
DM**SN

(For Daikin ULN)
DM**SN-U

Method of Error Detection:
Pressure switch during heating operation

Error Decision Conditions:
Pressure switch circuit closed when it should be open.
Pressure switch circuit open when it should be closed.

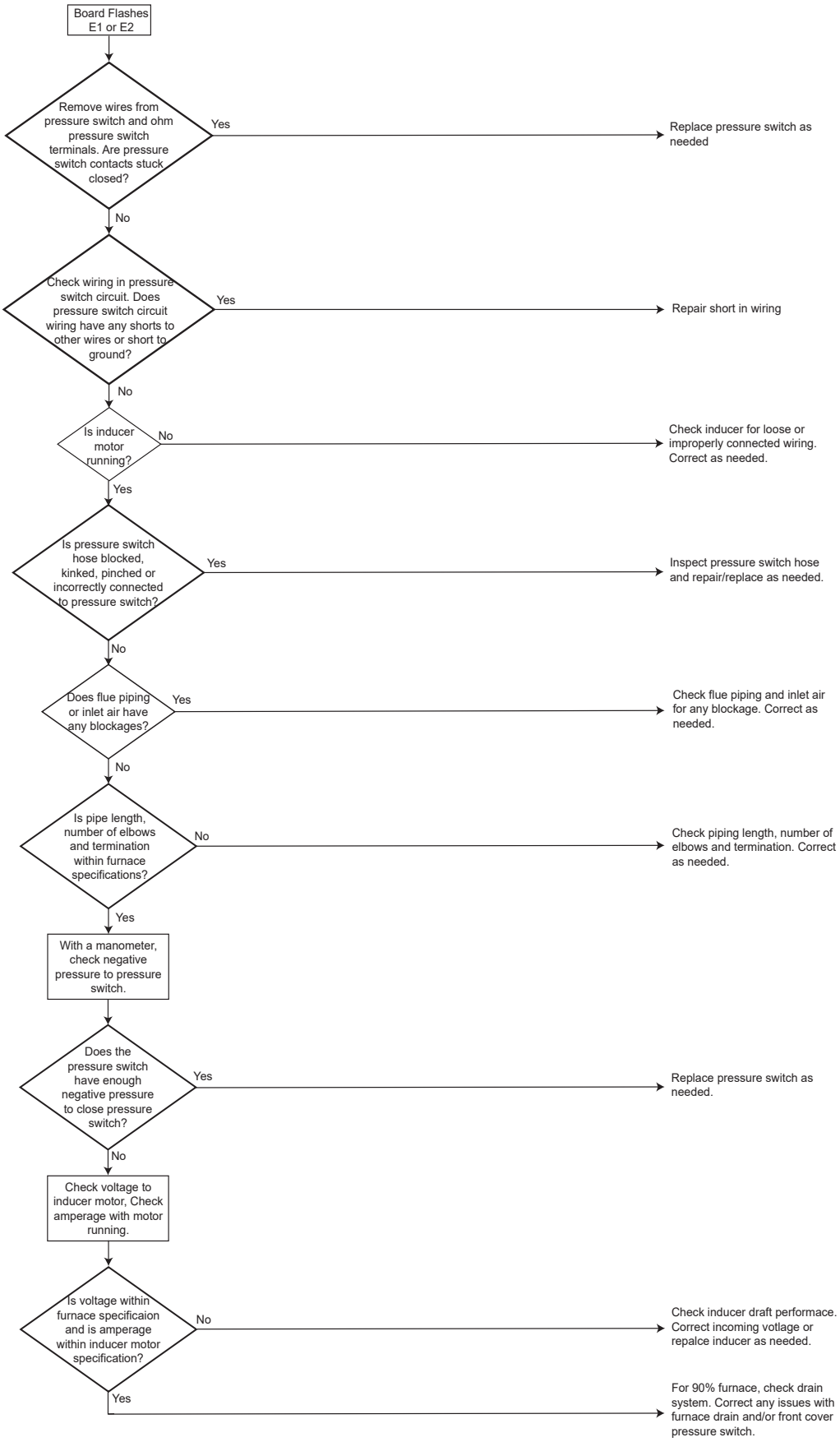

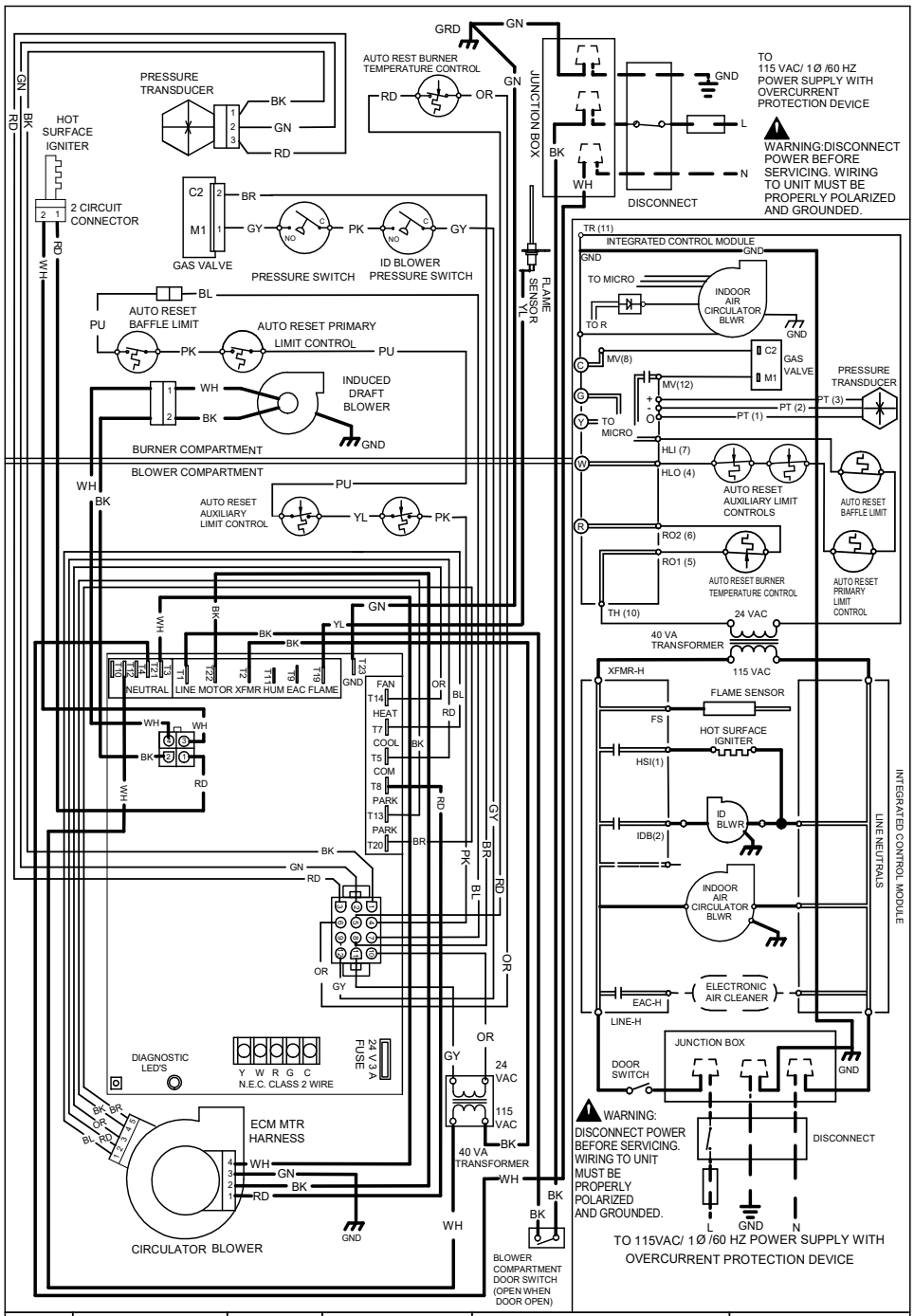

LED ACTIVITY	RED	AMBER	GREEN
STEADY ON	CONTROL FAULT DETECTED HARD LOCKOUT	OEM TEST MODE	STANDBY NORMAL OPERATION NO THERMOSTAT REQUESTS
RAPID FLASH	REVERSED LINE VOLTAGE POLARITY	FIELD TEST MODE	CLEAR ERROR HISTORY
1 FLASH	SYSTEM LOCKOUT - RETRIES EXCEEDED	LOW FLAME SENSE	CALL FOR HEATING
2 FLASHES	PS NULL ERROR :INCONSISTENT READING WITH INDUCER OFF	ID PLUG FAILURE	CALL FOR COOLING
3 FLASHES	PS NULL ERROR :INCONSISTENT READING WITH INDUCER ON	CONTROL FUSE OPEN	CONTINUOUS FAN OPERATION
4 FLASHES	HIGH LIMIT SWITCH OR BAFFLE LIMIT SWITCH OR AUX LIMIT SWITCH OPEN	——	——
5 FLASHES	FLAME PRESENT WITH GAS VALVE OFF	——	——
6 FLASHES	BURNER BOX LIMIT OPEN	——	——
7 FLASHES	GAS VALVE CIRCUIT SHORTED	——	——
8 FLASHES	BLOCKED VENT	——	——

NOTES:

1. MANUFACTUR'S SPECIFIED REPLACEMENT PARTS MUST BE USED WHEN SERVICING.
2. IF ANY OF THE ORIGINAL WIRE AS SUPPLIED WITH THE FURNACE MUST BE REPLACED, IT MUST BE REPLACED WITH WIRING MATERIAL HAVING A TEMPERATURE RATING OF AT LEAST 105 °C. USE COPPER CONDUCTORS ONLY.
3. BLOWER SPEEDS SHOULD BE ADJUSTED BY INSTALLER TO MATCH THE INSTALLATION REQUIREMENTS SO AS TO PROVIDE THE CORRECT HEATING TEMPRATURE RISE AND THE CORRECT COOLING CFM.
4. UNIT MUST BE PERMANENTLY GROUNDED AND CONFORM TO N.E.C. AND LOCAL CODES.

LOW VOLTAGE (24V)
LOW VOLTAGE FIELD
HI VOLTAGE (115V)
HI VOLTAGE FIELD
JUNCTION
TERMINAL
OUTPUT
INTERNAL TO INTEGRATED CONTROL
PLUG CONNECTION

EQUIPMENT GND
FIELD GND
FIELD SPLICE
SWITCH (TEMP.)
IGNITER
SWITCH (PRESS.)
OVERCURRENT PROT. DEVICE

COLOR CODES:	
YL YELLOW	PK PINK
OR ORANGE	BR BROWN
PU PURPLE	WH WHITE
GN GREEN	BL BLUE
BK BLACK	GY GRAY
	RD RED

0140F02507-A

Wiring is subject to change. Always refer to the wiring diagram on the unit for the most up-to-date wiring.

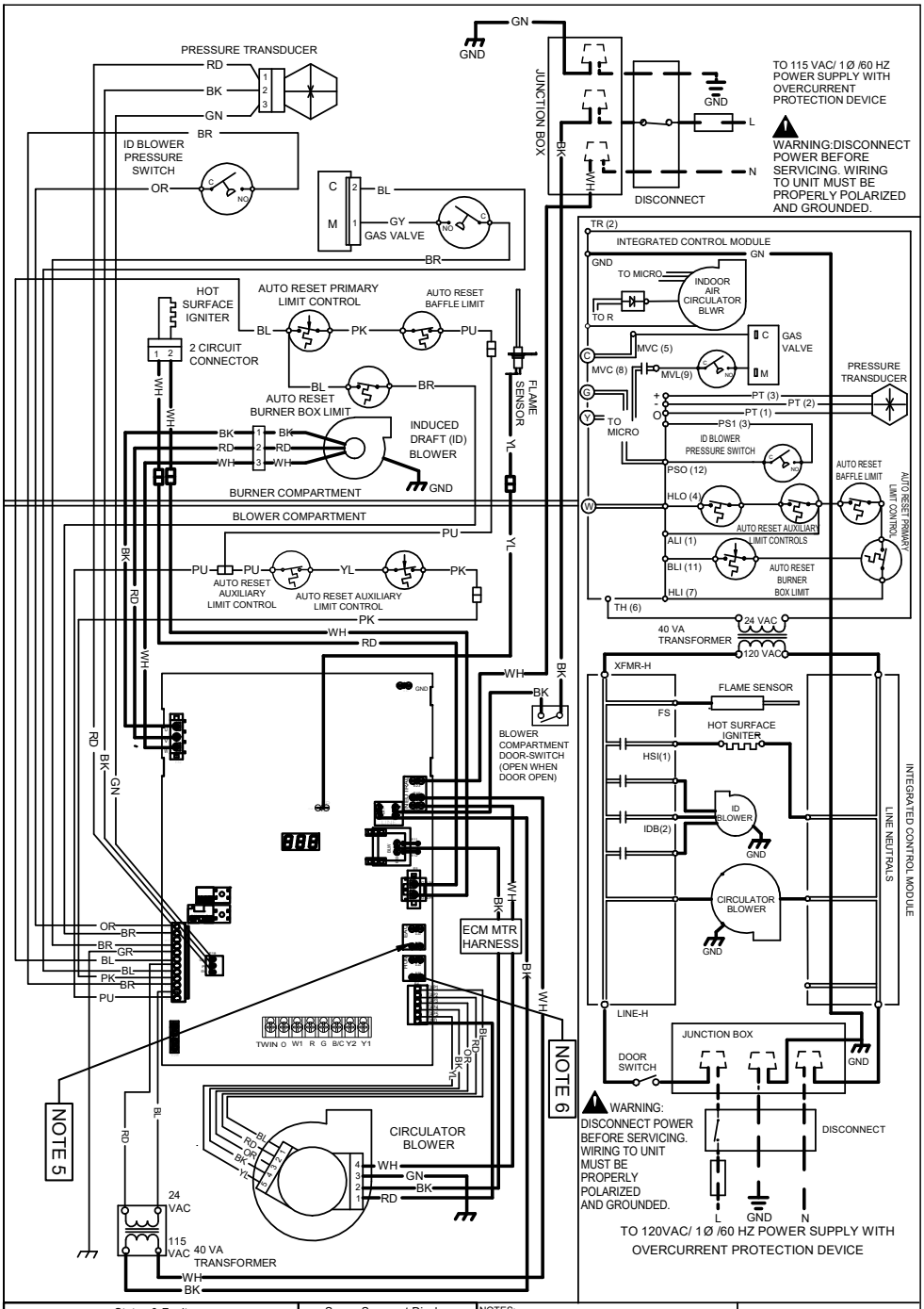

Status & Fault (see installation manual for complete list of faults)	Seven Segment Display Seg. 1	Seg. 2	Seg. 3
Idle	1	d	L
Continuous fan	F	A	n
Low Stage Cooling	1	A	C
High Stage Cooling	2	A	C
Gas Heat		g	H
HP Heat, Low Stage	1	H	P
HP Heat, High Stage	2	H	P
Defrost	d	F	t
Lockout Due to Excessive Retries Recycle	E	E	0
Pressure Switch Closed When Expected To Be Open	E	E	1
Pressure Switch Open When Expected To Be Closed	E	E	2
Open High Limit Switch	E	E	3
Flame Detected When No Flame Should Be Present	E	E	4
Open Fuse	E	E	5
Low Flame Signal	E	E	6
Ignitor Fault Or Ignitor Relay Fault	E	E	7
Reversed Line Polarity	E	E	A
Grounding Error	E	1	0
Inernal Gas Valve Error	E	E	b
External Gas Valve Error	E	E	C
Aux Limit Switch Open	E	E	d
Burner Limit Switch Open	E	1	I

NOTES:
1. MANUFACTUR'S SPECIFIED REPLACEMENT PARTS MUST BE USED WHEN SERVICING.
2. IF ANY OF THE ORIGINAL WIRE AS SUPPLIED WITH THE FURNACE MUST BE REPLACED, IT MUST BE REPLACED WITH WIRING MATERIAL HAVING A TEMPERATURE RATING OF AT LEAST 105°C. USE COPPER CONDUCTORS ONLY.
3. BLOWER SPEEDS SHOULD BE ADJUSTED BY INSTALLER TO MATCH THE INSTALLATION REQUIREMENTS SO AS TO PROVIDE THE CORRECT HEATING TEMPRATURE RISE AND THE CORRECT COOLING CFM.
4. UNIT MUST BE PERMANENTLY GROUNDED AND CONFORM TO N.E.C. AND LOCAL CODES.
5. EAC. NORMALLY OPEN CONTACTS FOR OPTIONAL ELECTRONIC AIR CLEANER USE. CONTACTS CLOSE WHEN INDOOR BLOWER IS RUNNING. TERMINALS ARE NOT INTERNALLY POWERED
6. HUM. NORMALLY OPEN CONTACTS FOR OPTIONAL HUMIDIFIER USE. CONTACTS CLOSE WHEN DRAFT INDUCER IS RUNNING. TERMINALS ARE NOT INTERNALLY POWERED

COLOR CODES:

BK BLACK	GY GRAY	RD RED
BL BLUE	OR ORANGE	WH WHITE
BR BROWN	PK PINK	YL YELLOW
GR GREEN	PU PURPLE	

EQUIPMENT GND
FIELD GND
FIELD SPLICE
SWITCH (TEMP.)
IGNITER
SWITCH (PRESS.)
OVERCURRENT PROT. DEVICE
LOW VOLTAGE (24V)
LOW VOLTAGE FIELD
HI VOLTAGE (120V)
HI VOLTAGE FIELD
INTERNAL TO INTEGRATED CONTROL
PLUG CONNECTION
JUNCTION
TERMINAL
OUTPUT

0140F02647-A

Wiring is subject to change. Always refer to the wiring diagram on the unit for the most up-to-date wiring.