Service Instructions

97% Modulating Gas Furnaces
34.5" Chassis DM97MC, DC97MC
& Accessories

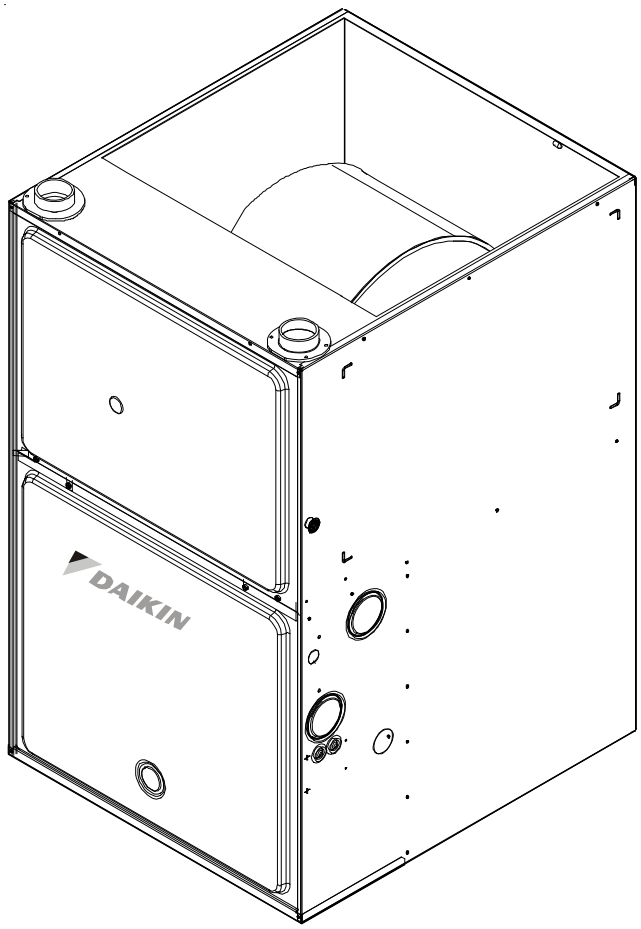

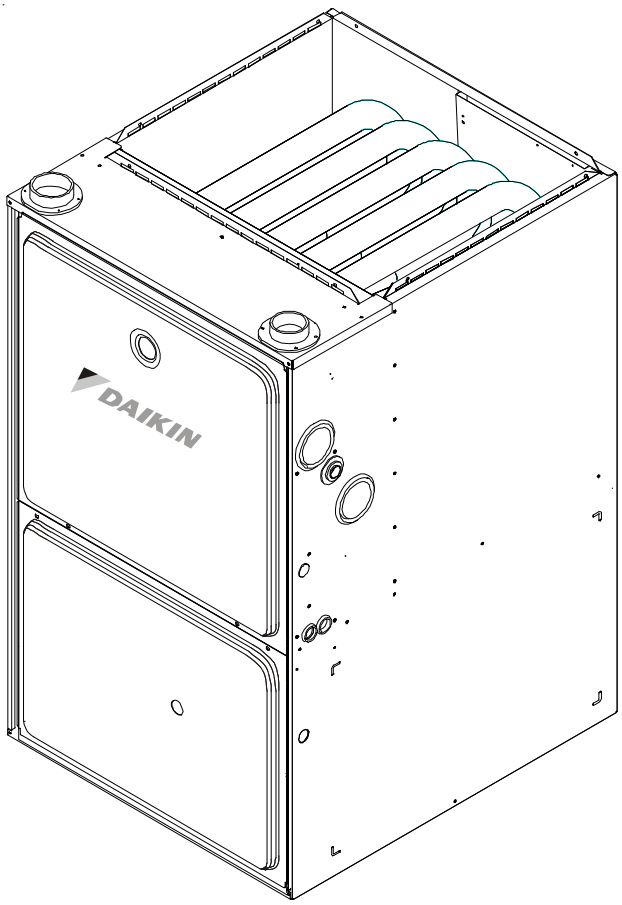

This manual is to be used by qualified, professionally trained HVAC technicians only. Daikin does not assume any responsibility for property damage or personal injury due to improper service procedures or services performed by an unqualified person.

RSD6612009
August 2014

Copyright © 2014 DAIKIN COMPANY, L.P.

TABLE OF CONTENTS

IMPORTANT INFORMATION 2-3
PRODUCT IDENTIFICATION ..... 4 - 7
ACCESSORIES ..... 8 - 10
LIGHTING INSTRUCTIONS 11
PRODUCT DESIGN ..... 12 - 23
OPERATION ..... 24 - 46
SERVICE AND OPERATION 47
OPERATIONAL CHECKS ..... 48 - 49
MAINTENANCE 50
SERVICING TABLE OF CONTENTS 51
SERVICING ..... 52 - 58
TROUBLESHOOTING ..... 59 - 63
STATUS CODES 64
WIRING DIAGRAM 65

IMPORTANT INFORMATION

Pride and workmanship go into every product to provide our customers with quality products. It is possible, however, that during its lifetime a product may require service. Products should be serviced only by a qualified service technician who is familiar with the safety procedures required in the repair and who is equipped with the proper tools, parts, testing instruments and the appropriate service manual. **REVIEW ALL SERVICE INFORMATION IN THE APPROPRIATE SERVICE MANUAL BEFORE BEGINNING REPAIRS.**

IMPORTANT NOTICES FOR CONSUMERS AND SERVICERS

RECOGNIZE SAFETY SYMBOLS, WORDS AND LABELS

WARNING

THIS UNIT SHOULD NOT BE CONNECTED TO, OR USED IN CONJUNCTION WITH, ANY DEVICES THAT ARE NOT DESIGN CERTIFIED FOR USE WITH THIS UNIT OR HAVE NOT BEEN TESTED AND APPROVED BY GOODMAN. SERIOUS PROPERTY DAMAGE OR PERSONAL INJURY, REDUCED UNIT PERFORMANCE AND/OR HAZARDOUS CONDITIONS MAY RESULT FROM THE USE OF DEVICES THAT HAVE NOT BEEN APPROVED OR CERTIFED BY GOODMAN.

WARNING

INSTALLATION AND REPAIR OF THIS UNIT SHOULD BE PERFORMED ONLY BY INDIVIDUALS MEETING THE REQUIREMENTS OF AN ENTRY LEVEL TECHNICIAN, AT A MINIMUM, AS SPECIFIED BY THE AIR CONDITIONING, HEATING, AND REFRIGERATION INSTITUTE (AHRI). ATTEMPTING TO INSTALL OR REPAIR THIS UNIT WITHOUT SUCH BACKGROUND MAY RESULT IN PRODUCT DAMAGE, PERSONAL INJURY, OR DEATH.

WARNING

TO PREVENT THE RISK OF PROPERTY DAMAGE, PERSONAL INJURY, OR DEATH, DO NOT STORE COMBUSTIBLE MATERIALS OR USE GASOLINE OR OTHER FLAMMABLE LIQUIDS OR VAPORS IN THE VICINITY OF THIS APPLIANCE.

WARNING

DAIKIN WILL NOT BE RESPONSIBLE FOR ANY INJURY OR PROPERTY DAMAGE ARISING FROM IMPROPER SERVICE OR SERVICE PROCEDURES. IF YOU INSTALL OR PERFORM SERVICE ON THIS UNIT, YOU ASSUME RESPONSIBILITY FOR ANY PERSONAL INJURY OR PROPERTY DAMAGE WHICH MAY RESULT. MANY JURISDICTIONS REQUIRE A LICENSE TO INSTALL OR SERVICE HEATING AND AIR CONDITIONING EQUIPMENT.

WARNING

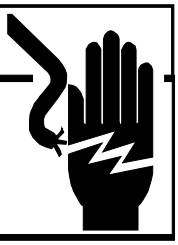

HIGH VOLTAGE

DISCONNECT ALL POWER BEFORE SERVICING OR INSTALLING THIS UNIT. MULTIPLE POWER SOURCES MAY BE PRESENT. FAILURE TO DO SO MAY CAUSE PROPERTY DAMAGE, PERSONAL INJURY OR DEATH.

IMPORTANT INFORMATION

⚠ WARNING

IF THE INFORMATION IN THESE INSTRUCTIONS IS NOT FOLLOWED EXACTLY, A FIRE OR EXPLOSION MAY RESULT CAUSING PROPERTY DAMAGE, PERSONAL INJURY OR LOSS OF LIFE.

– DO NOT STORE OR USE GASOLINE OR OTHER FLAMMABLE VAPORS AND LIQUIDS IN THE VICINITY OF THIS OR ANY OTHER APPLIANCE.

– WHAT TO DO IF YOU SMELL GAS:

- DO NOT TRY TO LIGHT ANY APPLIANCE.
- DO NOT TOUCH ANY ELECTRICAL SWITCH; DO NOT USE ANY PHONE IN YOUR BUILDING.
- IMMEDIATELY CALL YOUR GAS SUPPLIER FROM A NEIGHBOR'S PHONE. FOLLOW THE GAS SUPPLIER'S INSTRUCTIONS.
- IF YOU CANNOT REACH YOUR GAS SUPPLIER, CALL THE FIRE DEPARTMENT.

– INSTALLATION AND SERVICE MUST BE PERFORMED BY A QUALIFIED INSTALLER, SERVICE AGENCY OR THE GAS SUPPLIER.

⚠ WARNING

SHOULD OVERHEATING OCCUR OR THE GAS SUPPLY FAIL TO SHUT OFF, TURN OFF THE MANUAL GAS SHUTOFF VALVE EXTERNAL TO THE FURNACE BEFORE TURNING OFF THE ELECTRICAL SUPPLY.

DANGER
PELIGRO

CARBON MONOXIDE POISONING HAZARD

Special Warning for Installation of Furnace or Air Handling Units in Enclosed Areas such as Garages, Utility Rooms or Parking Areas

Carbon monoxide producing devices (such as an automobile, space heater, gas water heater, etc.) should not be operated in enclosed areas such as unventilated garages, utility rooms or parking areas because of the danger of carbon monoxide (CO) poisoning resulting from the exhaust emissions. If a furnace or air handler is installed in an enclosed area such as a garage, utility room or parking area and a carbon monoxide producing device is operated therein, there must be adequate, direct outside ventilation.

This ventilation is necessary to avoid the danger of CO poisoning which can occur if a carbon monoxide producing device continues to operate in the enclosed area. Carbon monoxide emissions can be (re)circulated throughout the structure if the furnace or air handler is operating in any mode.

CO can cause serious illness including permanent brain damage or death.

B10259-216

To locate an authorized servicer, please consult your telephone book or the dealer from whom you purchased this product. For further assistance, please contact:

CONSUMER INFORMATION LINE
DAIKIN BRAND PRODUCTS
TOLL FREE
1-855-770-5678 (U.S. only)
email us at:
customerservice@daikincomfort.com
fax us at:
(731) 856-1821
(Not a technical assistance line for dealers.)

Outside the U.S., call 1-713-861-2500.
(Not a technical assistance line for dealers.) Your telephone company will bill you for the call.

PRODUCT IDENTIFICATION

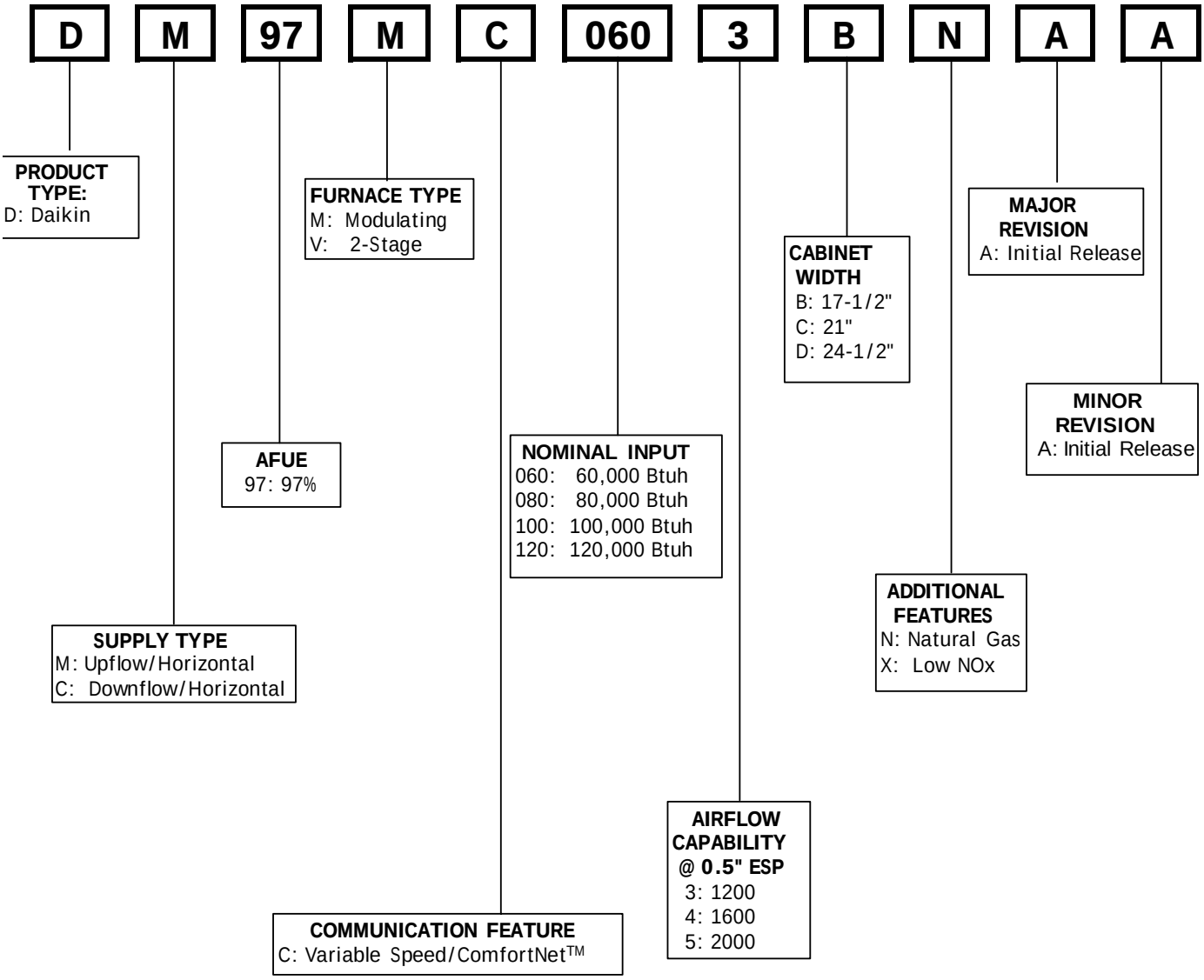

PRODUCT IDENTIFICATION

MODEL: DM97MC REV AA

Equipment Type	Daikin Brand Residential Gas Furnace
Heating Stages	Modulating (35% - 100% of rated input)
Cooling Stages	Two
Control Type	ClimateTalk ™ or Conventional 24 Volt
Blower Motor Type	4 Wire Variable Speed ECM

DM97MC	0603BN	0803BN	0804CN	1005CN	1205DN
Installation Positions	UF, Hor L/R	UF, Hor L/R	UF, Hor L/R	UF, Hor L/R	UF, Hor L/R
Installation Positions	UF, Hor L/R	UF, Hor L/R	UF, Hor L/R	UF, Hor L/R	UF, Hor L/R
BTUH Input Range (X 1000)	21 - 60	28 - 80	28 -80	35 - 100	42 - 120
A/C Capable Tons	1.5 - 3	1.5 - 3	2 - 4	2 - 5	2 - 5
Cabinet Hight "	34.5	34.5	34.5	34.5	34.5
Cabinet Width "	17.5	17.5	21	21	24.5
Heating CFM @ 100% Firing Rate	1059	1316	1337	1870	1940
Draft Inducer	3Ø Variable Speed				
Gas Valve	24 VAC, Modulates by Pneumatic signal				
24 VAC Heating Inputs	W1 / W2				
24 VAC Cooling Inputs	Y1 / Y2				
Primary Heat Exchanger	Stainless Steel				
Accessory Terminals	EAC terminal, HUM IN / HUM OUT terminals				
Gas Line Entry	Left or Right				
Revision Attributes	First revision of 34.5" modulating up flow furnace				

MODEL: DC97MC REV AA

Equipment Type	Daikin Brand Residential Gas Furnace
Heating Stages	Modulating (35% - 100% of rated input)
Cooling Stages	Two
Control Type	ClimateTalk ™ or Conventional 24 Volt
Blower Motor Type	4 Wire Variable Speed ECM

DC97MC	0603BN	0803BN	0804CN	1005CN
Installation Positions	CF, Hor L/R	CF, Hor L/R	CF, Hor L/R	CF, Hor L/R
BTUH Input Range (X 1000)	21 - 60	28 - 80	28 -80	35 - 100
A/C Capable Tons	1.5 - 3	1.5 - 3	2 - 4	2 - 5
Cabinet Hight "	34.5	34.5	34.5	34.5
Cabinet Width "	17.5	17.5	21	21
Heating CFM @ 100% Firing Rate	950	1146	1325	1779
Draft Inducer	3Ø Variable Speed			
Gas Valve	24 VAC, Modulates by Pneumatic signal			
24 VAC Heating Inputs	W1 / W2			
24 VAC Cooling Inputs	Y1 / Y2			
Primary Heat Exchanger	Stainless Steel			
Accessory Terminals	EAC terminal, HUM IN / HUM OUT terminals			
Gas Line Entry	Left or Right			
Revision Attributes	First revision of 34.5" modulating counter flow furnace			

PRODUCT IDENTIFICATION

MODEL #	MFG #	DESCRIPTION
AFE18-60A	N/A	**Fossil Fuel Kit.** The AFE18-60A control is designed for use where the indoor coil is located above/downstream of a gas or fossil fuel furnace when used with a heat pump. It will operate with single and two stage heat pumps and single and two stage furnaces. The AFE18-60A control will turn the heat pump unit off when the furnace is turned on. An anti-short cycle feature initiates a 3 minute timed off delay when the compressor goes off.
AMU1620 **AMU1625** **AMU2020** **AMU2025** **GMU1620** **GMU1625** **GMU2020** **GMU2025**	P1251305F P1251306F P1251307F P1251308F N/A	**Media Air Cleaner**. For use with modulating furnace models. The air cleaner is a high efficiency air filtration device designed to remove dirt, dust, pollen and other microscopic particles from the air passing through it. Flexible performance range up to 2,000 CFM capacity. The air cleaner should be installed in the system so that all the system air is circulated through the air cleaner. The air cleaner will only remove the airborne contaminants delivered to it. Maximum performance is obtained when the system blower is set for continuous operation. Carbon filters (optional) are available.
ASAS-10 **ASAS-11** **ASAS-12** **ASAS-18**	P1251301F P1251302F P1251303F P1251304F	**Electronic Air Cleaner**. For use with variable speed, modulating furnace models. The High-Efficiency Electronic Air Cleaner is designed to remove air contaminants down to .01 microns. Carbon filters (optional) remove odors. Dual indicator lights show unit operation at a glance. Electronic proving switch cycles the air cleaner On/Off with the system fan. Durable powder-coat paint finish resists corrosion.
CFSB17 **CFSB21** **CFSB24**	N/A	**Counterflow Subbase Kit**. For use with modulating 34.5" furnace models. These kits are available for the following furnace widths: 17.5" wide (CFSB17), 21" wide (CFSB21) and 24" wide (CFSB24). The kits must be used to prevent excessive temperature from reaching combustible materials, if the furnace is installed on a combustible floor. This subbase effectively separated the furnace base and plenum from combustible materials. To ensure safe installation, do not install the counterflow floor base directly on carpeting, tile, or other combustible material other than wood flooring.
CTK01	CTK01AA	**Communicating Thermostat Kit**- Digitally communicating touchscreen thermostat, a necessary part of any communicating system. Designed for use with compatible Daikin Air Handlers or Furnaces and outdoor split AC or Heat Pump units. This thermostat supports up to three stages of heat, two stages of cooling, dual fuel applications, dehumidification, filter maintenance reminders, outdoor temperature display and advanced menus including diagnostics. The CTK01AA kit includes a communicating touchscreen thermostat and sub base, 230V-24V 40va transformer, terminal blocks(2), wire jumpers, mounting screws, installation manual and homeowner guide.
CTK01BA	CTK01BA	**Communicating Thermostat Kit**- Digitally communicating touchscreen thermostat, a necessary part of any communicating system. Designed for use with compatible Daikin Air Handlers or Furnaces and outdoor split AC or Heat Pump units. This thermostat supports up to three stages of heat, two stages of cooling, dual fuel applications, dehumidification, filter maintenance reminders, outdoor temperature display and advanced menus including diagnostics. The CTK01BA kit includes a communicating touchscreen thermostat and sub base, terminal blocks(2), mounting screws, installation manual and homeowner guide.
CTK02**	CTK02**	**Communicating Thermostat Kit**- Digitally communicating thermostat, a necessary part of any communicating system. Designed for use with compatible Daikin Air Handlers or Furnaces and outdoor split AC or Heat Pump units. The CTK02** thermostat features full color, high definition display, advanced programming options including humidification control & heat and cool maximum temperature settings, a USB plug allowing dealers the ability to insert pre-programmed operating parameters and dealer information by use of an online data entry system.
CTK03A*	CTK03A*	**Communicating Thermostat Kit**- Digitally communicating touchscreen thermostat from Honeywell. Designed for use with compatible Daikin Air Handlers or Furnaces and outdoor split AC or Heat Pump units. The CTK03A* thermostat features full color high definition display, can be used with RedLINK wireless accessories.
CTK04A*	CTK04A*	**Communicating Thermostat Kit**- Digitally communicating touchscreen thermostat from Honeywell. Designed for use with compatible Daikin Air Handlers or Furnaces and outdoor split AC or Heat Pump units. The CTK04A* thermostat features full color high definition display, can be used with RedLINK wireless accessories. Split system inverter capable.

PRODUCT IDENTIFICATION

MODEL #	MFG #	DESCRIPTION
DCVK-20 (CVENT-2) **DCVK-30 (CVENT-3)**	N/A	**Concentric Vent Kit**. For use with Daikin Modulating furnace models. This kit is designed to allow terminations of a direct vent furnace to be "concentrically" vented through a wall or roof. This kit allows a single penetration to support terminations for both the vent/flue and the combustion air intake pipe. The DCVK-20 (2") and DCVK-30 (3") kits are certified for models listed above. See specification sheets on future models for use of the vent kit.
DEHUM1	P1227801F	**Dehumidistat.** For use with Daikin two-stage variable speed modulating furnace models. Wall mounted, 24 volt humidity control available as a Dehumidistat used to reduce the airflow in the air conditioning mode when necessary to lower the humidity in an occupied home to prevent dew build-up associated with high humidity levels. This control features a moisture-sensitive nylon element and also provides positive ON-OFF settings for manual operation. The control is a normally closed switch that opens on humidity rise causing the blower to switch to a lower speed to control the humidity within the structure.
EFR02	N/A	**External Filter Rack Kit**. For use with Daikin 97% upflow, variable speed *MVM 34.5" modulating gas furnaces. This kit is intended to provide a location, external to the furnace casing for installation of a permanent filter. The rack is mounted over the indoor air blower compartment area of either side panel, and provide filter retention as well as a location for attaching return air ductwork.
0170K00000S	N/A	**Side Wall Only Concentric Vent Kit**. For use with 97% modulating furnace models. This kit is to be used with 2" - 3" vent systems. The vent kit must terminate outside the structure. This kit is NOT intended for use with single pipe (indirect vent) installations.
0170K00001S	N/A	**Side Wall Only Concentric Vent Kit**. For use with 97% modulating furnace models. This kit is to be used with 2" vent systems. The vent kit must terminate outside the structure. This kit is NOT intended for use with single pipe (indirect vent) installation
LPLP03	N/A	**LP Gas Low Pressure Kit**. The kit monitors gas line pressure with a pressure switch and will open the circuit to the gas valve if the LP tank pressure gets low.
LPM-09	N/A	**LP Conversion Kit** Converts a 34.5" modulating furnace to operate on L.P. gas. The kit contains an L.P. gas valve and a set of six L.P. orifices.
RF000142	N/A	**Drain Coupling Kit** For use when the drain/vent elbow has been removed in a horizontal left installation. This kit prevents condensate from getting in the inducer and routes the condensate to a drain.

ACCESSORIES

97% Mod Furnace Accessories

Model Number	AFE180-60A	AMU / GMU	ASAS / GSAS	CFSB17	CFSB21	RF000142	CTK01*	CTK02*	CTK03*	CTK04*
Description	Fossil Fuel Kit	Media Air Cleaners	Electronic Air Cleaner	Counterflow Subbase 17.5"	Counterflow Subbase 21"	Drain Coupling Kit	Communicating Thermostat Kit	Com Thermostat Kit-Modulating, High Def.	Com Thermostat Kit-Modulating, High Def	Com Thermostat Kit-Modulating, High Def
DM97MC0603BN**	X	X	X			X	X	X	X	X
DM97MC0803BN**	X	X	X			X	X	X	X	X
DM97MC0804CN**	X	X	X			X	X	X	X	X
DM97MC1005CN**	X	X	X			X	X	X	X	X
DM97MC1205DN**	X	X	X			X	X	X	X	X
DC97MC0603BN**	X	X	X	X		X	X	X	X	X
DC97MC0803BN**	X	X	X	X		X	X	X	X	X
DC97MC0804CN**	X	X	X		X	X	X	X	X	X
DC97MC1005CN**	X	X	X			X	X	X	X	X

Model Number	0170K00000S	0170K00001S	DCVK-20 (C-CVENT2)	DCVK-30 (CVENT-3)	DEHUM1	EFR02	LPLP03	LPM-09
Description	Concentric Side Wall Vent Kit (3")	Concentric Side Wall Vent Kit (2")	Concentric Vent Kit (2")	Concentric Vent Kit (3")	Dehumidistat	External Filter Kit	Low LP Tank Protection	L.P. Kit
DM97MC0603BN**	X	X	X	X	X	X	X	X
DM97MC0803BN**	X	X		X	X	X	X	X
DM97MC0804CN**	X	X		X	X	X	X	X
DM97MC1005CN**	X	X		X	X	X	X	X
DM97MC1205DN**	X	X	X	X	X	X	X	X
DC97MC0603BN**	X	X	X	X	X	X	X	X
DC97MC0803BN**	X	X		X	X	X	X	X
DC97MC0804CN**	X	X	X	X	X	X	X	X
DC97MC1005CN**	X	X		X	X	X	X	X

ACCESSORIES

EXTERNAL FILTER RACK (EFR02)

Used on 97% Upflow Modulating Furnaces

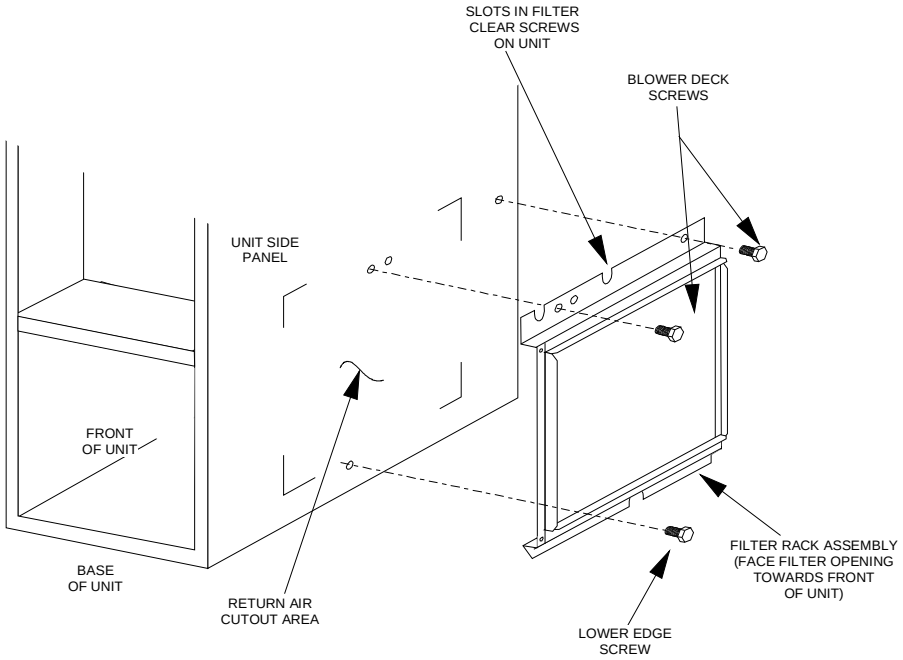

CONCENTRIC VENT CONVERSION KIT (DCVK-20 & DCVK-30 [CVENT-2 & CVENT-3*])

The DCVK-20 (2") or the DCVK-30 (3") is a concentric vent kit approved with furnaces listed in this manual.

This concentric vent kit allows for vertical or horizontal vent termination. The illustrations give a brief view of the kit and its application.

See the section in this manual under "Vent Flue and Combustion Air Pipe Terminations" for more information or consult the Installation and Operating Instructions (IO-619*).

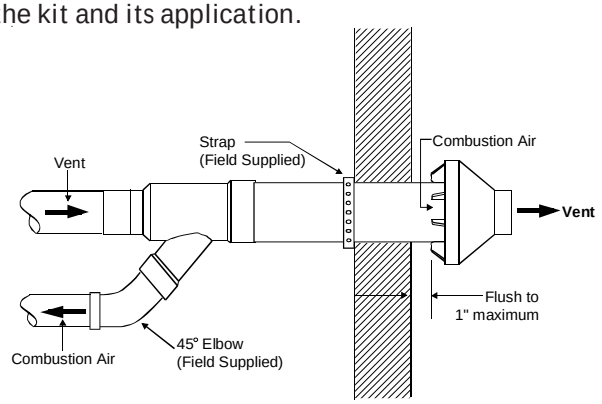

DCVK
(Horizontal Installation)

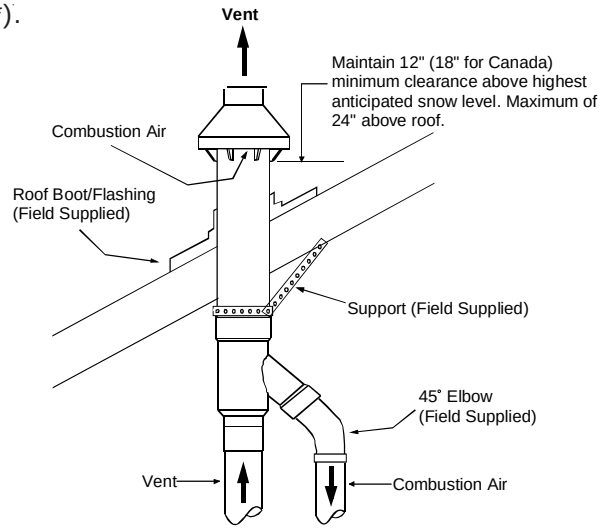

DCVK
(Vertical Installation)

DCVK-20 & DCVK-30 are also known as CVENT-2 & CVENT-3

ACCESSORIES

SIDE WALL VENT KIT (0170K00000S)

This side wall only vent kit #0170K00000S is to be used with 2” - 3” vent systems. This kit is **NOT intended** for use with single pipe (non-direct vent) installations.

The vent kit must terminate outside the structure and may be installed with the intake and exhaust pipes located side-by-side or with one pipe above the other.

See the section in this manual under "Vent Flue and Combustion Air Pipe Terminations" for more information or consult the Installation Instructions (IO-635).

SIDE WALL VENT KIT (0170K00001S)

This side wall only vent kit #0170K00001S is to be used with 2” vent systems. This kit is **NOT intended** for use with single pipe (non-direct vent) installations.

The vent kit must terminate outside the structure and may be installed with the intake and exhaust pipes located side-by-side or with one pipe above the other.

See the section in this manual under "Vent Flue and Combustion Air Pipe Terminations" for more information or consult the Installation Instructions (IO-805).

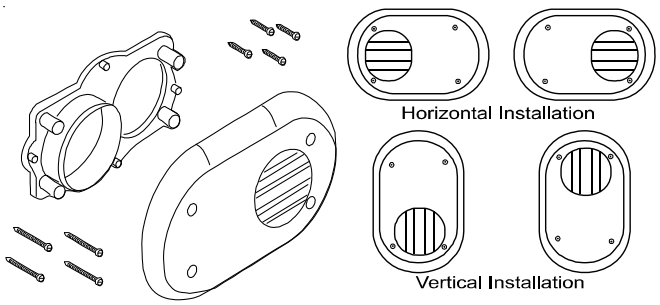

LPLP03 LOW LP GAS PRESSURE SHUT-OFF KIT

Installation of the LPLP03 kit is recommended on every LP converted furnace to protect the furnace against low LP gas supply pressure. Low LP supply pressure can cause poor combustion and carbon in the heat exchanger. The LPLP03 kit will open the electrical circuit to the gas valve in the event of low supply pressure. The kit contains a pressure switch, gas fittings and electrical harness to connect the switch in series with the gas valve.

LPM-09 LP CONVERSION KIT

This furnace is factory equipped to operate on Natural Gas but may be field converted to operate on LP gas. To convert a DM97MC or DC97MC furnace to operate on LP gas, the LPM-09 conversion kit must be used. The LPM-09 kit contains a modulating gas valve ready for use with LP gas, as well as a set of 1.25 mm orifices to replace the factory installed natural gas orifices. Do not attempt to convert or adjust a modulating furnace gas valve. Factory burners are suitable for both gases, L.P. and Natural. Burner replacement is not required when the furnace is converted for use with L.P. gas.

AFE18-60A DUAL FUEL ACCESSORY

When installing the modulating furnace with a heat pump, the preferred installation would include a communicating thermostat. A communicating thermostat provides control of gas heat and heat pump operation and eliminates the need for a separate dual fuel control. A legacy dual fuel thermostat could also be used with 24 volt wiring to control the gas furnace and heat pump. If a communicating thermostat or legacy dual fuel thermostat are not used, the AFE18-60A kit must be added to provide control of the equipment. This control is mounted indoors near the furnace and provides terminals for thermostat, furnace, and heat pump wiring. The AFE18-60A may be used with or without a separate outdoor thermostat.

OT18-60A OUTDOOR THERMOSTAT

For use in a legacy dual fuel installation to lock-out the heat pump at a selected temperature.

CFSB17, 21, 24 COUNTER FLOW BASE

The CFSB base must be used when installing a DC97MC furnace in the vertical position on a combustible floor without a coil under the furnace.

LIGHTING INSTRUCTIONS

FOR YOUR SAFETY READ BEFORE OPERATING

WARNING: If you do not follow these instructions Exactly, a fire or explosion may result causing property damage, personal injury or loss of life.

A. This appliance does not have a pilot. It is equipped with an ignition device which automatically lights the burner. Do not try to light the burner by hand.

B. BEFORE OPERATING smell all around the appliance area for gas. Be sure to smell next to the floor because some gas is heavier than air and will settle on the floor.

WHAT TO DO IF YOU SMELL GAS

- Do not try to light any appliance.
- Do not touch any electric switch; do not use any phone in your building.
- Immediately call your gas supplier from a neighbor's phone. Follow the gas supplier's instructions.
- If you cannot reach your gas supplier, call the fire department.

C. Use only your hand to push in or turn the gas control lever. Never use tools. If the lever will not push in or turn by hand, don't try to repair it, call a qualified service technician. Force or attempted repair may result in a fire or explosion.

D. Do not use this appliance if any part has been underwater. Immediately call a qualified service technician to inspect the appliance and to replace any part of the control system and any gas control which has been underwater.

LIRE AVANT DE METTRE EN MARCHELIRE

AVERTISSEMENT: Quiconque ne respecte pas à la lettre les instructions dans le presént manuel risque de déclencher un incendie ou une explosion entraînant des dommages matériels, des lesions corporelles ou la perte de vies humaines.

A. Cet appareil ne comporte pas de veilleuse. Il est muni d'un dispositif d'allumage qui allume automatiquement le brûleur. Ne pas tenter d'allumer le brûleur manuellement.

B. AVANT DE LE FAIRE FONCTIONNER, renifler tout autour de l'appariel pour decéler une odeur de gaz. Renifler prés du plancher, car certains gaz sont plus lourds que l'air et peuvent s'accumuler au niveau du sol.

QUE FAIRE S'IL Y A UNE ODEUR DE GAZ

- Ne pas tenter d'allumer d'appareils.
- Ne toucher à aucun interrupteur; ne pas vous servir des téléphones dans le bâtiment.
- Appelez immédiatement votre fournisseur de gaz depuis un voisin. Suivez les instructions du fournisseur de gaz
- Si vous ne pouvez rejoindre le fournisseur de gaz, appelez le service des incendies.»

C. Ne pousser ou tourner la manette d'admission du gaz qu'à la main. Ne jamais emploer d'outil à cette fin. Si la manette reste coincée, ne tenter pas de la réparer; appelez un technicien qualifié. Quiconque tente de forcer la manette ou de la réparer peut provoquer une explosion ou un incendie.»

D. Ne pas se servir de cet appareil s'il a été plongé dans l'eau, même partiellement. Faire inspecter l'appareil par un technicien qualifié et remplacer toutr partie du systéme de contrôle et toute còmmande qui ont été plongées dans l'eau.»

OPERATING INSTRUCTIONS

1. STOP! Read the safety information above on this label.
2. Set the thermostat to lowest setting.
3. Turn off all electric power to the appliance.
4. This appliance is equipped with an ignition device which automatically lights the burner. Do not try to light the burner by hand.
5. Push the gas control lever to "OFF" Position. Do not force.
6. Wait five (5) minutes to clear out any gas. Then smell for gas, including near the floor. If you then smell gas, STOP. Follow "B" in the safety. information above on this label if you don't smell gas, go to next step.
7. Push gas control lever to "ON".
8. Replace access panel.
9. Turn on all electric power to the appliance.
10. Set thermostat to desired setting.
11. If the appliance will not operate, follow the instructions "To Turn Off Gas To Appliance" and call your service technician or gas company.

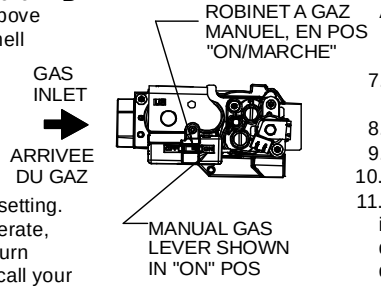

MISE EN MARCHE

1. ARRÊTEZ Lisez les instructions de sécurité dans la section supérieure de cette étiquette.
2. Régler le thermostat à la température la plus basse.
3. Couper l'alimentation électrique de l'appareil.
4. Cet appareil menager etant dote d'un systeme d'allumage automatique, ne pas essayer à allumer le brûleur manuellement.
5. Pousse le levier du contrÔle du gaz a "OFF/ ARRET" position.
6. Attendre cinq (5) minutes pour laisser echapper tout le gaz. Renifler tout autour de l'appareil, y compris prés du plancher, pour déceler une odeur de gaz. Si c'est le cas, ARRÊTEZ. Passer à l'etape B des instructions de securite sur la portion superieure de cette etiquette. S'il n'y a pas d'odeur de gaz, passer à l'etàpe suivante.
7. Pousse le levier du contrôle du gaz à "ON/MARCHE" position.
8. Remettre en place le panneau d'accés.
9. Mettre l'appareil sous tension.
10. Régler le thermostat à la température désirée.
11. Si l'appareil ne se met pas en marche, suivre les instructions intitulées Comment couper l'admission de gaz de l'appareil et appeler un technicien qualifié ou le fournisseur de gaz.

TO TURN OFF GAS TO APPLIANCE

1. Set the thermostat to lowest setting.
2. Turn off all electric power to the appliance if service is to be performed.
3. Push the gas control lever to "OFF" Position. Do not force.
4. Replace control access panel.

POUR COUPER L'ADMISSION DE GAZ DE L'APPAREIL

1. Régler le thermostat à la température la plus bassé.
2. Couper l'alimentation électrique de l'appareil s'il faut procéder à des operations d'entretien.
3. Pousse le levier du contrôle du gaz à "OFF/ ARRET" position. Ne pas forcer.
4. Remettre en place le panneau d'accés.

0140F00996 REV A

PRODUCT DESIGN

Adhere to the following warnings and cautions when installing, adjusting, altering, servicing, or operating the furnace. To ensure proper installation and operation, thoroughly read this manual for specifics pertaining to the installation and application of this product.

WARNING

TO PREVENT PERSONAL INJURY OR DEATH DUE TO IMPROPER INSTALLATION, ADJUSTMENT, ALTERATION, SERVICE OR MAINTENANCE, REFER TO THIS MANUAL. FOR ADDITIONAL ASSISTANCE OR INFORMATION, CONSULT A QUALIFIED INSTALLER, SERVICER AGENCY OR THE GAS SUPPLIER.

WARNING

IF THE INFORMATION IN THESE INSTRUCTIONS IS NOT FOLLOWED EXACTLY, A FIRE OR EXPLOSION MAY RESULT CAUSING PROPERTY DAMAGE, PERSONAL INJURY OR LOSS OF LIFE.

- DO NOT STORE OR USE GASOLINE OR OTHER FLAMMABLE VAPORS AND LIQUIDS IN THE VICINITY OF THIS OR ANY OTHER APPLIANCE.
- **WHAT TO DO IF YOU SMELL GAS:**
  - DO NOT TRY TO LIGHT ANY APPLIANCE.
  - DO NOT TOUCH ANY ELECTRICAL SWITCH; DO NOT USE ANY PHONE IN YOUR BUILDING.
  - IMMEDIATELY CALL YOUR GAS SUPPLIER FROM A NEIGHBOR'S PHONE. FOLLOW THE GAS SUPPLIER'S INSTRUCTIONS.
  - IF YOU CANNOT REACH YOUR GAS SUPPLIER, CALL THE FIRE DEPARTMENT.
- INSTALLATION AND SERVICE MUST BE PERFORMED BY A QUALIFIED INSTALLER, SERVICE AGENCY OR THE GAS SUPPLIER.

WARNING

THIS PRODUCT CONTAINS OR PRODUCES A CHEMICAL OR CHEMICALS WHICH MAY CAUSE SERIOUS ILLNESS OR DEATH AND WHICH ARE KNOWN TO THE STATE OF CALIFORNIA TO CAUSE CANCER, BIRTH DEFECTS OR OTHER REPRODUCTIVE HARM.

WARNING

HEATING UNIT SHOULD NOT BE UTILIZED WITHOUT REASONABLE, ROUTINE, INSPECTION, MAINTENANCE AND SUPERVISION. IF THE BUILDING IN WHICH ANY SUCH DEVICE IS LOCATED WILL BE VACANT, CARE SHOULD BE TAKEN THAT SUCH DEVICE IS ROUTINELY INSPECTED, MAINTAINED AND MONITORED. IN THE EVENT THAT THE BUILDING MAYBE EXPOSED TO FREEZING TEMPERATURES AND WILL BE VACANT, ALL WATER-BEARING PIPES SHOULD BE DRAINED, THE BUILDING SHOULD BE PROPERLY WINTERIZED, AND THE WATER SOURCE CLOSED. IN THE EVENT THAT THE BUILDING MAY BE EXPOSED TO FREEZING TEMPERATURES AND WILL BE VACANT, ANY HYDRONIC COIL UNITS SHOULD BE DRAINED AS WELL AND, IN SUCH CASE, ALTERNATIVE HEAT SOURCES SHOULD BE UTILIZED.

WARNING

TO PREVENT POSSIBLE PROPERTY DAMAGE, PERSONAL INJURY OR DEATH DUE TO ELECTRICAL SHOCK, THE FURNACE MUST BE LOCATED TO PROTECT THE ELECTRICAL COMPONENTS FROM WATER.

DANGER
PELIGRO

CARBON MONOXIDE POISONING HAZARD

Special Warning for Installation of Furnace or Air Handling Units in Enclosed Areas such as Garages, Utility Rooms or Parking Areas

Carbon monoxide producing devices (such as an automobile, space heater, gas water heater, etc.) should not be operated in enclosed areas such as unventilated garages, utility rooms or parking areas because of the danger of carbon monoxide (CO) poisoning resulting from the exhaust emissions. If a furnace or air handler is installed in an enclosed area such as a garage, utility room or parking area and a carbon monoxide producing device is operated therein, there must be adequate, direct outside ventilation.

This ventilation is necessary to avoid the danger of CO poisoning which can occur if a carbon monoxide producing device continues to operate in the enclosed area. Carbon monoxide emissions can be (re)circulated throughout the structure if the furnace or air handler is operating in any mode.

CO can cause serious illness including permanent brain damage or death.

B10259-216

WARNING

SHOULD OVERHEATING OCCUR OR THE GAS SUPPLY FAIL TO SHUT OFF, TURN OFF THE MANUAL GAS SHUTOFF VALVE EXTERNAL TO THE FURNACE BEFORE TURNING OFF THE ELECTRICAL SUPPLY.

WARNING

POSSIBLE PROPERTY DAMAGE, PERSONAL INJURY OR DEATH DUE TO FIRE, EXPLOSION, SMOKE, SOOT, CONDENSATION, ELECTRICAL SHOCK OR CARBON MONOXIDE MAY RESULT FROM IMPROPER INSTALLATION, REPAIR OPERATION, OR MAINTENANCE OF THIS PRODUCT.

PRODUCT DESIGN

Electrostatic Discharge (ESD) Precautions

NOTE: Discharge your body's static electricity before touching unit. An electrostatic discharge can adversely affect electrical components.

Use the following precautions during furnace installation and servicing to protect the integrated control module from damage. By putting the furnace, the control, and the person at the same electrostatic potential, these steps will help avoid exposing the integrated control module to electrostatic discharge. This procedure is applicable to both installed and non-installed (ungrounded) furnaces.

1. Disconnect all power to the furnace. Do not touch the integrated control module or any wire connected to the control prior to discharging your body's electrostatic charge to ground.
2. Firmly touch a clean, unpainted, metal surface of the furnaces near the control. Any tools held in a person's hand during grounding will be discharged.
3. Service integrated control module or connecting wiring following the discharge process in step 2. Use caution not to recharge your body with static electricity; (i.e., do not move or shuffle your feet, do not touch ungrounded objects, etc.). If you come in contact with an ungrounded object, repeat step 2 before touching control or wires.
4. Discharge your body to ground before removing a new control from its container. Follow steps 1 through 3 if installing the control on a furnace. Return any old or new controls to their containers before touching any ungrounded object.

WARNING

TO PREVENT PROPERTY DAMAGE, PERSONAL INJURY OR DEATH DUE TO FIRE, DO NOT INSTALL THIS FURNACE IN A MOBILE HOME, TRAILER, OR RECREATIONAL VEHICLE.

Introduction

This is a Category IV furnace. This furnace uses a pressurized venting system and must be installed per National and local codes requirements and the installation manual that was shipped with the furnace.

Our 34.5" modulating furnace is one of the products in our newly redesigned line of shorter chassis furnaces. It comes in two models: an up flow / horizontal model and a down flow / horizontal model.

The up flow / horizontal 34.5" modulating furnace is available in the following nominal capacities: 60,000 BTUH – 3 ton drive; 80,000 BTUH – 3 ton drive; 80,000 BTUH – 4 ton drive; 100,000 BTUH – 5 ton drive; 120,000 BTUH – 5 ton drive.

DM97MC0603BN**
DM97MC0803BN**
DM97MC0804CN**
DM97MC1005CN**
DM97MC1205DN**

The down flow / horizontal 34.5" modulating furnace is available in the following nominal capacities: capacities: 60,000 BTUH – 3 ton drive; 80,000 BTUH – 3 ton drive; 80,000 BTUH – 4 ton drive; 100,000 BTUH – 5 ton drive.

DC97MC0603BN**
DC97MC0803BN**
DC97MC0804CN**
DC97MC1005CN**

Product Description

Features

General Information

The modulating furnace is part of our family of communicating ready products. The furnace may be used with conventional single or multi-stage thermostats as well as our CTK01 communicating thermostats & CTK02**, CTK03 and CTK04 communicating-modulating thermostats using the ClimateTalk™ communicating protocol. Burner manifold pressure is controlled by negative air pressure created by the draft inducer. Gas valve, pressure switch assembly, and induced draft blower are linked together by pneumatic tubing. The furnace features a Honeywell gas valve capable of variable gas input rates as low as 35% and up to 100% of rated input. Indoor air is delivered by a variable speed ECM motor which bases the CFM need off of the burner input. The modulating furnace operation is based off of negative pressure created by the draft inducer. The Integrated Furnace Control (IFC) receives commands from the room thermostat. The IFC then controls the RPM of the (3 phase) inducer by varying the frequency and voltage to the inducer. This is known as variable frequency drive (VFD).

Acceptable Equipment Combinations

With CTK0* Communicating Thermostat:

1. Modulating furnace alone
2. Modulating furnace with Daikin communicating split A/C or H/P unit (no separate dual fuel control is required)
3. Modulating furnace with non-communicating 1 stage A/C split unit (can not support a 2 stage A/C or a non-communicating heat pump).

With Conventional Non-Communicating Thermostat

PRODUCT DESIGN

(Single or Multi-Stage)

1. Modulating furnace alone.
2. Modulating furnace with Daikin communicating split A/C or H/P unit (a dual fuel thermostat or separate dual fuel control is required for H/P).
3. Modulating furnace with non-communicating split A/C or H/P (a dual fuel thermostat or separate dual fuel control is required for H/P).

Product Application

This furnace is primarily designed for residential home-heating applications. It is NOT designed or certified for use in mobile homes, trailers or recreational vehicles. Neither is it designed or certified for outdoor applications. The furnace **MUST** be installed indoors (i.e., attic space, crawl space, or garage area provided the garage area is enclosed with an operating door).

This furnace can be used in the following non-industrial commercial applications:

Schools, Office buildings, Churches, Retail stores,
Nursing homes, Hotels/motels,
Common or office areas

In such applications, the furnace must be installed with the following stipulations:

- It must be installed per the installation instructions provided and per local and national codes.
- It must be installed indoors in a building constructed on site.
- It must be part of a ducted system and not used in a free air delivery application.
- It must not be used as a "make-up" air unit.
- It must be installed with two-pipe systems for combustion air.
- All other warranty exclusions and restrictions apply This furnace is an ETL dual-certified appliance and is appropriate for use with natural or propane gas (**NOTE:** If using propane, a propane conversion kit is required).

Dual certification means that the combustion air inlet pipe is optional and the furnace can be vented as a:

Non-direct vent (single pipe) central forced air furnace in which combustion air is taken from the installation area or from air ducted from the outside or,

Direct vent (dual pipe) central forced air furnace in which all combustion air supplied directly to the furnace burners through a field installed combustion air pipe.

This furnace may be used as a construction site heater **ONLY** if all of the following conditions are met:

- The vent system is permanently installed per these installation instructions.
- A room thermostat is used to control the furnace. Fixed jumpers that provide continuous heating CANNOT be used and can cause long term equipment damage.
- Return air ducts are provided and sealed to the furnace.
- A return air temperature range between 60ºF (16ºC) and 80ºF (27ºC) is maintained.
- Air filters are installed in the system and maintained during construction replaced as appropriate during construction, and upon completion of construction.
- The input rate and temperature rise are set per the furnace rating plate.
- 100% outside air is provided for combustion air requirements during construction. Temporary ducting can be used.

  NOTE: Do not connect the temporary duct directly to the furnace. The duct must be sized for adequate combustion and ventilation in accordance with the latest edition of the National Fuel Gas Code NFPA 54/ANSI Z223.1 or CAN/CSA B149.1 Installation Codes.
- The furnace heat exchanger, components, duct system, air filters and evaporator coils are thoroughly cleaned following final construction clean up.
- All furnace operating conditions (including ignition, input rate, temperature rise and venting) are verified according to these installation instructions.

NOTE: The Commonwealth of Massachusetts requires that the following additional requirements must also be met:

- Gas furnaces must be installed by a licensed plumber or gas fitter.
- A T-handle gas cock must be used.
- If the unit is to be installed in an attic, the passageway to and the service area around the unit must have flooring.

To ensure proper furnace operation, install, operate and maintain the furnace in accordance with the installation manual shipped with the furnace as well as all local building codes and ordinances. In their absence, follow the latest edition of the National Fuel Gas Code (NFPA 54/ANSI Z223.1), and/or CAN/CSA B149 Installation Codes, local plumbing or waste water codes, and other applicable codes.

A copy of the National Fuel Gas Code (NFPA 54/ANSI Z223.1) can be obtained from any of the following:

American National Standards Institute
1430 Broadway
New York, NY 10018

National Fire Protection Association
1 Batterymarch Park
Quincy, MA 02269

CSA International
8501 East Pleasant Valley
Cleveland, OH 44131

The rated heating capacity of the furnace should be greater than or equal to the total heat loss of the area to be heated.

PRODUCT DESIGN

The total heat loss should be calculated by an approved method or in accordance with "ASHRAE Guide" or "Manual J-Load Calculations" published by the Air Conditioning Contractors of America.

A copy of the CAN/CSA B149 Installation Codes can also be obtained from:

CSA International

178 Rexdale Boulevard

Etobicoke, Ontario, Canada M9W 1R3

Furnace Installation Requirements

Thoroughly read the Installation Manual shipped with the furnace before conducting installation or repairs.

- Centrally locate the furnace with respect to the proposed or existing air distribution system.
- Ensure the temperature of the return air entering the furnace is between 55°F and 100°F when the furnace is heating.
- Provide provisions for venting combustion products outdoors through a proper venting system. Special consideration should be given to vent/flue pipe routing and combustion air intake pipe when applicable. Refer to *Vent/Flue Pipe and Combustion Air Pipe -Termination Locations* for appropriate termination locations and to determine if the piping system from furnace to termination can be accomplished within the guidelines given. **NOTE:** The length of flue and/or combustion air piping can be a limiting factor in the location of the furnace.
- Locate the furnace so condensate flows downwards to the drain. Do not locate the furnace or its condensate drainage system in any area subject to below freezing temperatures without proper freeze protection. Refer to *Condensate Drain Lines and Trap* for further details.
- Ensure adequate combustion air is available for the furnace. Improper or insufficient combustion air can expose building occupants to gas combustion products that could include carbon monoxide. Refer to *Combustion and Ventilation Air Requirements.*
- Set the furnace on a level floor to enable proper condensate drainage. If the floor becomes wet or damp at times, place the furnace above the floor on a concrete base sized approximately 1-1/2" larger than the base of the furnace. Refer to the *Horizontal Applications and Considerations* for leveling of horizontal furnaces.
- Ensure upflow or horizontal furnaces are not installed directly on carpeting, or any other combustible material. The only combustible material allowed is wood.
- A special accessory subbase must be used for upright counterflow unit installations over any combustible material (including wood). Refer to subbase instructions for installation details. (**NOTE:** A subbase will not be required if an air conditioning coil is located beneath the furnace between the supply air opening and the combustible floor.
- Exposure to contaminated combustion air will result in safety and performance-related problems. Do not install the furnace where the combustion air is exposed to the following substances:
  - permanent wave solutions
  - chlorinated waxes or cleaners
  - chlorine-based swimming pool chemicals
  - water softening chemicals
  - deicing salts or chemicals
  - carbon tetrachloride
  - halogen type refrigerants
  - cleaning solutions (such as perchloroethylene)
  - printing inks
  - paint removers
  - varnishes
  - hydrochloric acid
  - cements and glues
  - antistatic fabric softeners for clothes dryers
  - and masonry acid washing materials
- Isolate a non-direct furnace from an area contaminated by any of the above substances. This protects the *non-direct vent* furnace from airborne contaminants. To ensure that the enclosed *non-direct vent* furnace has an adequate supply of combustion air, vent from a nearby uncontaminated room or from outdoors. Refer to the *Combustion and Ventilation Air Requirements* for details.
- If the furnace is used in connection with a cooling unit, install the furnace upstream or in parallel with the cooling coil. Premature heat exchanger failure will result if the cooling coil is placed upstream of the furnace.

  For vertical (upflow or downflow) applications, the minimum cooling coil width shall not be less than furnace width minus 1". Additionally, a coil installed above an upflow furnace or under a counterflow furnace may be the same width as the furnace or may be one size larger than the furnace. *Example: a "C" width coil may be installed with a "B" width furnace.*

  For upflow applications, the front of the coil and furnace must face the same direction.
- If the furnace is installed in a residential garage, position the furnace so that the burners and ignition source are located not less than 18 inches (457 mm) above the floor. Protect the furnace from physical damage by vehicles.

PRODUCT DESIGN

- If the furnace is installed horizontally, ensure the access doors are not on the “up/top” or “down/bottom” side of the furnace.
- Do not connect this furnace to a chimney flue that serves a separate appliance designed to burn solid fuel.
- On Counterflow Installations, the air conditioning coil must be downstream on the supply (positive) side of the furnace heat exchanger.
- *Counterflow Installation over a noncombustible floor.* Before setting the furnace over the plenum opening, ensure the surface around the opening is smooth and level. A tight seal should be made between the furnace base and floor by using a silicone rubber caulking compound or cement grout.
- *Counterflow Installation over a combustible floor.* If installation over a combustible floor becomes necessary, use an accessory subbase (see Specification Sheet applicable for your model for details.) A special accessory subbase must be used for upright counterflow unit installations over any combustible material including wood. Refer to subbase instructions for installation details. Follow the instructions with the subbase for proper installation.

  Do not install the furnace directly on carpeting, tile, or other combustible material other than wood flooring. (**NOTE**: The subbase will not be required if an air conditioning coil is installed between the supply air opening on the furnace and the floor.)

Furnace Components

Heat Exchanger Assembly

The primary heat exchanger is a tubular type constructed of high quality steel (409 stainless steel for the heat exchanger assembly consists of primary and secondary sections crimped together on a back transition plate. The secondary heat exchanger is a single pass coil consisting of AL29-4C stainless steel tubes and aluminum fins. These stainless steel tubes are expanded on to the aluminum fins to enhance heat transfer. Each tube in the secondary heat exchanger contains an internal turbulator to effectively scrub heat from the flue gases. The primary and secondary heat exchanger sections are joined by a 441 stainless steel header plate. Flue gas condensation takes place in the secondary heat exchanger as latent heat is transferred from the flue gases to heat the conditioned space.

Burners

Burners have been redesigned for 34.5" chassis furnaces. Overall length and width dimensions remain the same as 40" model burners. The burners used 34.5" models have burner head insert with larger diameter center hole and a larger number of surrounding holes.

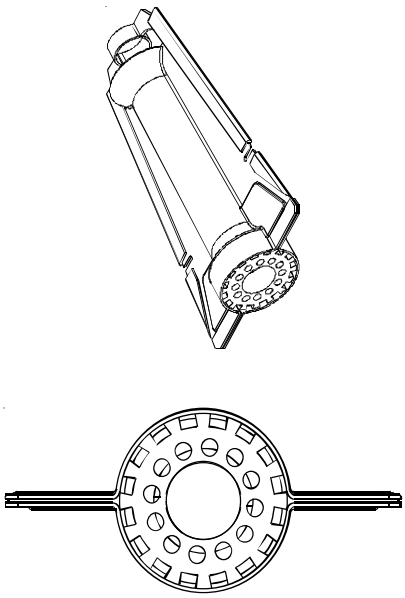

New 34.5 Burner

Depending on the size of the furnace, each furnace will have from three to six inshot burners. Burners are precisely constructed of aluminized steel and designed to provide proper ignition and flame stability.

Gas Manifold Assembly

Each gas manifold is fitted with the appropriate number of #45 natural gas orifices. At 100% of gas input, each burner will provide approximately 20,000 BTUH. If converting to LP gas, the factory installed manifold assembly must be replaced by the manifold assembly provided in the LP kit.

ECM Motor

A variable speed ECM four wire indoor fan motor provides supply air to the conditioned space. This is the same motor used on previous generation communicating furnaces.

Induced Draft Blower (IDB)

All modulating furnace models use a three phase induced draft blower to draw flue gases through the heat exchanger. The inducer uses ball bearings and is permanently lubricated. This motor is driven at varying speeds by the VFD (variable frequency drive) section of the IFC. The IFC takes typical single phase power supplied to the furnace and converts it to a three phase supply to operate the draft inducer at the desired speed. The windings of the induced draft motor will have equal resistance +/- 5%. Normal resistance readings at room temperature will range from 14-17 ohms. The voltage supplied by the IFC to drive the induced draft blower will vary from 15-110 volts A/C between any two windings. This would be read between any two of the three power wires between the IFC and the induced draft blower.

PRODUCT DESIGN

This voltage to the IBD will vary between furnace models and is dependant on what percentage of maximum fire is being called for. The power wires are colored red, white, and black. A green colored ground wire is also present.

Hot Surface Igniter

Modulating furnaces use a 115 volt silicon nitride hot surface igniter. This is the familiar and reliable 0131F00008S igniter with 17 second warm up time. At room temperature the igniter has a resistance range of 37 - 68 ohms. The H.S.I. is connected electrically to the IFC by a 3/16" push-on connection.

Gas Valve

Modulating furnaces use a 24 VAC pneumatically operated gas valve by Honeywell. The valve is energized by the integrated furnace control on a call for heat, wired in series through the front-cover pressure switch. The firing rate percentage is determined by the negative pressure created by the operation of the draft inducer. The gas valve is factory set and ***non-adjustable*** in the field. Do not remove the seal covering the regulator screws or attempt to adjust either of the regulator screws.

Inductor Coil

Wired in series with ¾ and 1 HP ECM motors; the inductor coil conditions the power supply to the motor, smoothing out spikes and electrical noise. With voltage applied to one side of the inductor coil, the output voltage to the motor should be the same as incoming voltage.

Integrated Furnace Control (IFC)

The IFC is the main control center for the furnace. It has many functions including;

- Receiving commands from the thermostat for heating, and cooling, continuous fan operation.
- Receiving commands for dehumidification and humidification.
- Communicating with the ECM motor for proper air delivery to the conditioned space.
- Assuring safe ignition by checking the state of pressure switches and limit switches before and after ignition.
- Assuring safe operation by continuously monitoring the presence of flame, the state of the pressure switches and limit and roll out switches.
- Displays information on the dual seven segment displays regarding thermostat call, air flow delivery and fault status
- Controlling the speed of the induced draft blower by variable voltage & frequency.

Features of the IFC:

Aux Terminals Located next to the low voltage connector, there are two terminals labeled aux in & aux out. A factory jumper is installed between these two terminals. As an option; the jumper may be removed and the terminals wired up to a normally closed float switch. The switch must be closed for normal operation. If the switch is sensed open, the IFC will:

- Terminate a call for gas heat.
- When the modulating furnace is installed with a communicating thermostat and a non-communicating a/c unit, the IFC will open the Y1 relay to turn off the condensing unit
- Log and display an auxiliary open error code
- Once the auxiliary switch re-closes the IFC reverts back to normal operation

Hum Terminals A pair of ¼" HUM terminals are located on the board to power a humidifier. These are dry contacts rated at 1 amp. A typical application of these contacts would be to supply one of the Hum contacts with power from the L1 terminal and connect the remaining Hum terminal to a humidifier transformer primary. When used with the CTK02**, CTK03 and CTK04 thermostats, these contacts will close with a call for humidity and the furnace indoor blower will be powered at continuous fan speed. When used with a 24 volt control system, the Hum contacts will close on a call for heat when the induced draft blower is powered.

EAC Terminal A ¼" EAC terminal is provided. Any time the indoor blower motor is powered, the EAC terminal will be powered. Contact is rated for 1 amp

Flame Proving. Flame signal is continuously monitored by the IFC. The flame rod, flame rod wire and proper grounding are all critical to proving the presence of flame. Because of the design of the Honeywell flame proving system, reading flame signal with a microamp meter will not provide reliable and consistent results and is therefore not a recommended practice. The IFC has a built in warning (E6) if flame signal is approaching the low threshold.

Field Test Mode This feature can be used by the service technician to quickly bring a furnace up to high fire. Entering field test mode will by-pass the staging routine and allow the furnace to run at 100% of rated input. To use field test mode; during a call for heat, press the fault recall button twice within 5 seconds, the display will change to Ft, then press and hold the fault recall button for a few seconds until the display flashes Ft. The furnace will stay in field test mode for 5 minutes or until the call for heat is removed.

Dual 7 Segment Displays The modulating furnace IFC has dual 7 segment displays to provide service information. This information includes; present thermostat demand, CFM, and fault codes.

Fault Recall This feature allows the service person to check for any fault history. The board memory is capable of recording and storing 10 fault codes. To use this feature, the furnace must not have an existing thermostat call. Pressure fault recall button from 2-5 seconds (until the display goes blank) then release, all faults will be displayed one at a time, beginning with the most recent, max of 3 consecutive faults will be stored. When all errors have been displayed the display returns to ON. To erase stored faults, hold the fault recall button until the display starts flashing, then release.

PRODUCT DESIGN

WARNING

TO PREVENT POSSIBLE EQUIPMENT DAMAGE, PROPERTY DAMAGE, PERSONAL INJURY OR DEATH, THE FOLLOWING BULLET POINTS MUST BE OBSERVED WHEN INSTALLING THIS UNIT.

WARNING

POSSIBLE PROPERTY DAMAGE, PERSONAL INJURY OR DEATH DUE TO FIRE, EXPLOSION, SMOKE, SOOT, CONDENSATION, ELECTRICAL SHOCK OR CARBON MONOXIDE MAY RESULT FROM IMPROPER INSTALLATION, REPAIR OPERATION, OR MAINTENANCE OF THIS PRODUCT.

CLEARANCES AND ACCESSIBILITY

DM97C MINIMUM CLEARANCES TO COMBUSTIBLE MATERIALS (INCHES)						
POSITION*	FRONT	SIDES	REAR	TOP	FLUE	FLOOR
Upflow	3"	0"	0"	1"	0"	C
Horizontal	Alcove	6"	0"	4"	0"	C

C = If placed on combustible floor, floor MUST be wood only.

NOTES:

- For servicing or cleaning, a 24" front clearance is required.
- Unit connections (electrical, flue and drain) may necessitate greater clearances than the minimum clearances listed above.
- In all cases, accessibility clearance must take precedence over clearances from the enclosure where accessibility clearances are greater.

DC97MC MINIMUM CLEARANCES TO COMBUSTIBLE MATERIALS (INCHES)						
POSITION*	SIDES	REAR	FRONT	BOTTOM	FLUE	TOP
Counterflow	0"	0"	3"	NC	0"	
Horizontal	6"	0"	3"	C	0"	6"

C = If placed on combustible floor, floor MUST be wood only.

NC = For installation on non-combustible floors only. A combustible subbase must be used for installations on combustible flooring.

NOTES:

- For servicing or cleaning, a 24" front clearance is required.
- Unit connections (electrical, flue and drain) may necessitate greater clearances than the minimum clearances listed above.
- In all cases, accessibility clearance must take precedence over clearances from the enclosure where accessibility clearances are greater.

Installations must adhere to the clearances to combustible materials to which this furnace has been design certified. The minimum clearance information for this furnace is provided on the unit's clearance label. These clearances must be permanently maintained. Clearances must also accommodate an installation's gas, electrical, and drain trap and drain line connections. If the alternate combustion air intake or vent/flue connections are used additional clearance must be provided to accommodate these connections. Refer to *Vent/Flue Pipe and Combustion Air Pipe* for details. **NOTE:** In addition to the required clearances to combustible materials, a minimum of 24 inches service clearance must be available in front of the unit.

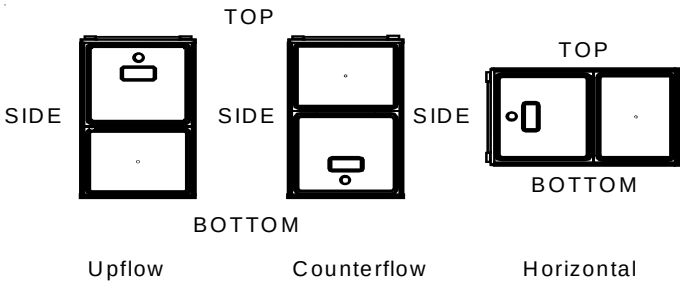

THERMOSTAT LOCATION

The thermostat should be placed approximately five feet from the floor on a vibration-free, inside wall in an area having good air circulation. Do not install the thermostat where it may be influenced by any of the following:

- Drafts, or dead spots behind doors, in corners, or under cabinets.
- Hot or cold air from registers.
- Radiant heat from the sun.
- Light fixtures or other appliances.
- Radiant heat from a fireplace.
- Concealed hot or cold water pipes, or chimneys.
- Unconditioned areas behind the thermostat, such as an outside wall.

Consult the instructions packaged with the thermostat for mounting instructions and further precautions.

Combustion & Ventilation Air Requirements

WARNING

TO AVOID PROPERTY DAMAGE, PERSONAL INJURY OR DEATH, SUFFICIENT FRESH AIR FOR PROPER COMBUSTION AND VENTILATION OF FLUE GASES MUST BE SUPPLIED. MOST HOMES REQUIRE OUTSIDE AIR BE SUPPLIED INTO THE FURNACE AREA.

Improved construction and additional insulation in buildings have reduced heat loss by reducing air infiltration and escape around doors and windows. These changes have helped in reducing heating/cooling costs but have created a problem supplying combustion and ventilation air for gas fired and other fuel burning appliances. Appliances that pull air out of the house (clothes dryers, exhaust fans, fireplaces, etc.) increase the problem by starving appliances for air.

House depressurization can cause back drafting or improper combustion of gas-fired appliances, thereby exposing building occupants to gas combustion products that could include carbon monoxide.

PRODUCT DESIGN

If this furnace is to be installed in the same space with other gas appliances, such as a water heater, ensure there is an adequate supply of combustion and ventilation air for the other appliances. Refer to the latest edition of the National Fuel Gas Code NFPA 54/ANSI Z223.1 or CAN/CSA B149 Installation Codes or applicable provisions of the local building codes for determining the combustion air requirements for the appliances.

Most homes will require outside air be supplied to the furnace area by means of ventilation grilles or ducts connecting directly to the outdoors or spaces open to the outdoors such as attics or crawl spaces.

Installation Positions

DM97MC models may be installed up flow or horizontally with left or right side down. DC97MC models may be installed down flow or horizontally with left or right side down. Do not install any furnace on its back.

Horizontal Installations

1. Horizontal installations require 5.5" under the furnace to accommodate the drain trap.
2. Horizontal furnaces must be installed with ¾" slope from back to front to permit condensate flow towards the front of the furnace.

When installing a DM97MC horizontally with the left side down, there are two options for connecting the vent pipe to the furnace.

1. Venting may be connected to the furnace vent pipe fitting on the original top (now the end) of the furnace
2. The internal vent pipe and elbow may be removed from the furnace to permit the vent to exit the top (original side) of the furnace. If this option is used, an RF000142 Vent-Drain coupling must be used to keep condensate from collecting in the inducer assembly.

Refer to the following instructions and illustration.

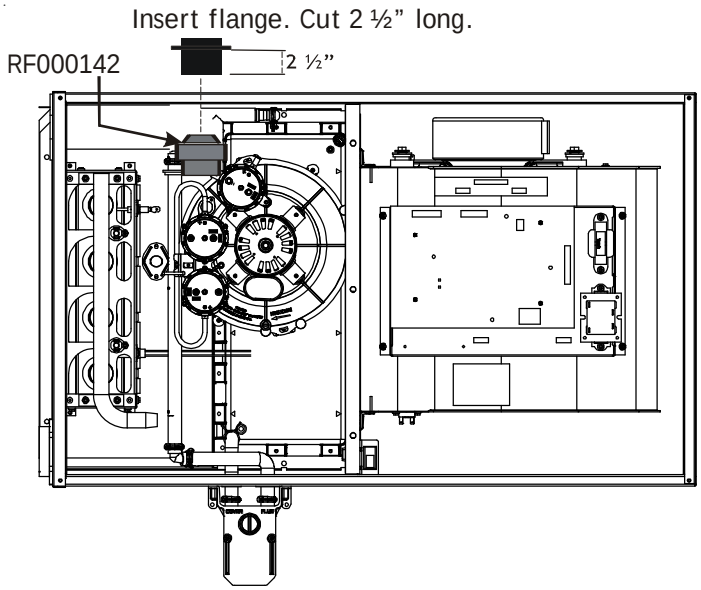

Horizontal Installation

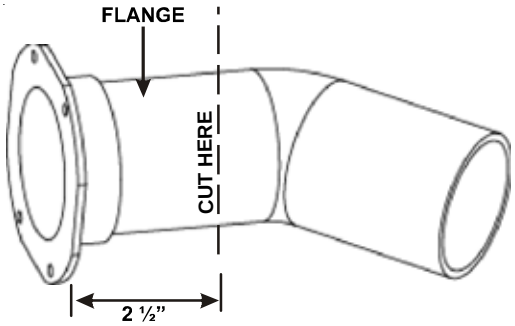

Vent/Flue Pipe Cuts

1. Remove screws from vent flange.
2. Remove internal elbow and vent pipe.
3. Cut pipe 2 1/2" from flange.
4. Remove cabinet plug adjacent to inducer outlet and install an original cabinet vent hole.
5. Install RF000142 coupling on inducer outlet.
6. Install flanged vent section removed in step 2 & secure with clamps.
7. Secure flange to cabinet using screws removed in step 1.

PRODUCT DESIGN

DUCT CONNECTIONS

Return duct must not be connected to the back of any furnace. Up flow furnaces installed vertically may have return air duct connections on either side or the furnace bottom. When airflow requirements are greater than 1,800 CFM for heating or cooling, both sides or a bottom return must be used.

Down flow furnaces installed vertically must have the return duct connection on top the furnace. For any furnace installed horizontally, return duct must be attached to the end of the furnace.

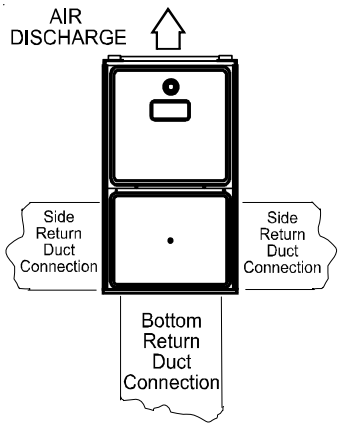

UPFLOW UPRIGHT

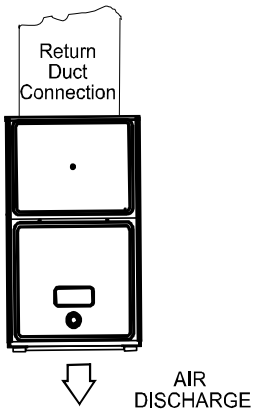

COUNTERFLOW

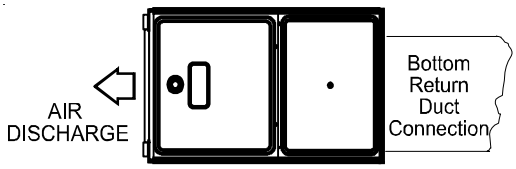

UPFLOW HORIZONTAL LEFT AIR DISCHARGE

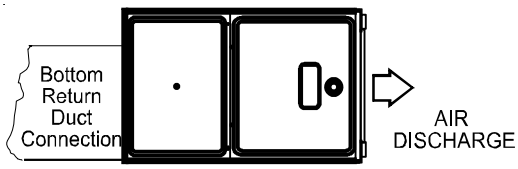

UPFLOW HORIZONTAL RIGHT AIR DISCHARGE

Recommended Installation Positions

Propane Gas/High Altitude Installations

WARNING

POSSIBLE PROPERTY DAMAGE, PERSONAL INJURY OR DEATH MAY OCCUR IF THE CORRECT CONVERSION KITS ARE NOT INSTALLED. THE APPROPRIATE KITS MUST BE APPLIED TO ENSURE SAFE AND PROPER FURNACE OPERATION. ALL CONVERSIONS MUST BE PERFORMED BY A QUALIFIED INSTALLER OR SERVICE AGENCY.

This furnace is shipped from the factory configured for natural gas up to 10,000 ft. altitude. Propane conversions require the proper LP kit to compensate for the energy content difference between natural and propane gas.

LP kits include an L.P. gas valve and a set of gas orifices. Although the gas valve is ready to use with L.P. gas, be sure not to remove the tape from the regulator screws. Do not change or adjust the gas valve regulator springs.

Gas	Altitude	Kit	Orifice	Manifold Pressure		Pressure Switch Change
				High Stage	Low Stage	
Natural	0-10,000	None	#45[1]	3.5" w.c.	1.7" w.c.	None
Propane		LPM-09	1.25MM[2]	10.0" w.c.	2.6" w.c.	None

NOTE: In Canada, gas furnaces are only certified to 4500 feet.

Vent/Flue Pipe & Combustion Air Pipe

WARNING

FAILURE TO FOLLOW THESE INSTRUCTIONS CAN RESULT IN BODILY INJURY OR DEATH. CAREFULLY READ AND FOLLOW ALL INSTRUCTIONS GIVEN IN THIS SECTION.

PROPER VENT/FLUE AND COMBUSTION AIR PIPING PRACTICES

Adhere to these instructions to ensure safe and proper furnace performance. The length, diameter, and number of elbows of the vent/flue pipe and combustion air pipe (when applicable) affects the performance of the furnace and must be carefully sized. All piping must be installed in accordance with local codes and the insttaltion manual shipped with the furnace.

Piping must be adequately secured and supported to prohibit sagging, joint separation, and/or detachment from the furnace. Horizontal runs of vent/flue piping must be supported every three to five feet and must maintain a 1/4 inch per foot downward slope, back towards the furnace, to properly return condensate to the furnace's drain system.

PRODUCT DESIGN

PREFERRED

TRANSITION MADE IN VERTICAL SECTION OF PIPE

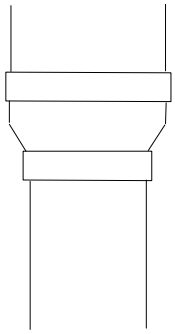

ACCEPTABLE

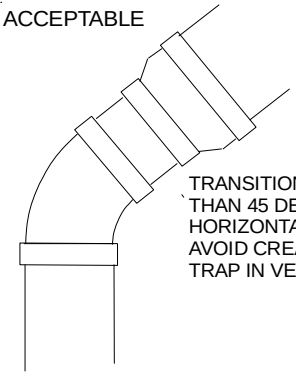

TRANSITION NO LESS THAN 45 DEGREES TO HORIZONTAL PLANE TO AVOID CREATING A WATER TRAP IN VENT PIPING.

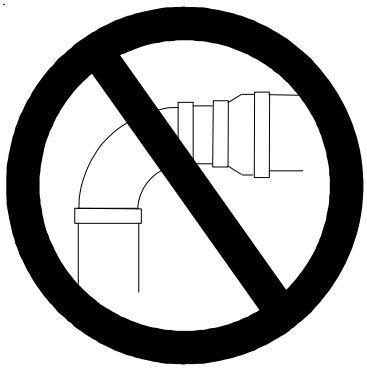

NO TRANSITION ON HORIZONTAL PLANE, THIS CREATES A WATER TRAP AND RESTRICTS FLUE GASES

DM97MC/DC97MC Direct Vent (2 - Pipe) and Non-Direct Vent (1- Pipe) [6]										
Maximum Allowable Length of Vent/Flue Pipe & Combustion Air Pipe (ft) [1] [2]										
Unit Input (Btu)	Pipe Size [4] (in.)	Number of Elbows [3] [5]								
		0	1	2	3	4	5	6	7	8
60,000	2 or 2 1/2	250	245	240	235	230	225	220	215	210
80,000	2 or 2 1/2	250	245	240	235	230	225	220	215	210
80,000	3	250	243	236	229	222	215	208	201	194
100,000	2 or 2 1/2	90	85	80	75	70	65	60	55	50
100,000	3	250	243	236	229	222	215	208	201	194
120,000	2 or 2 1/2	75	70	65	60	55	50	45	40	35
120,000	3	220	213	206	199	192	185	178	171	164

1) Maximum allowable limits listed on individual lengths for inlet and flue and NOT a combination.
2) Minimum requirement for each vent pipe is five (5) feet in length and one elbow/tee.
3) Tee used in the vent/flue termination must be included when determining the number of elbows in the piping system.
4) 2 1/2" or 3" diameter pipe can be used in place of 2" diameter pipe.
5) Increased Clearance Configurations using (2) 45 deg. Elbows should be considered equivalent to one 90 deg. elbow.
6) One 90° elbow should be secured to the combustion air intake connection.

PRODUCT DESIGN

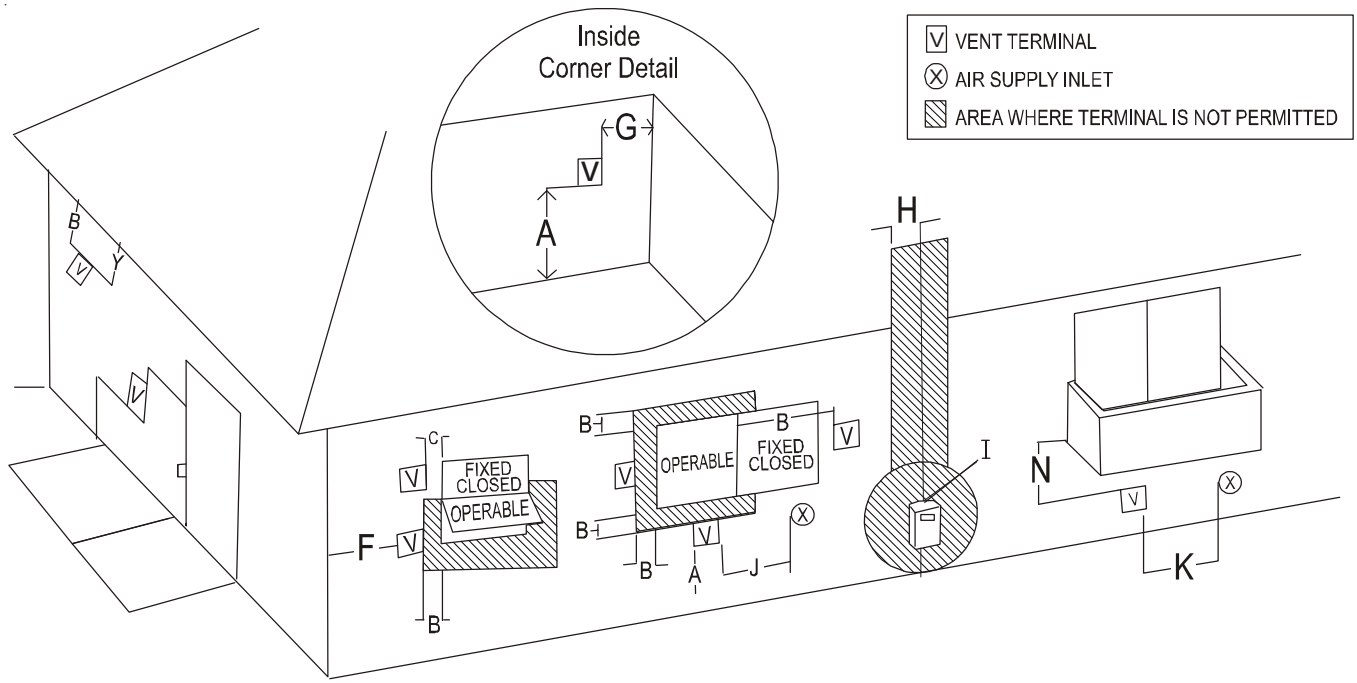

DIRECT VENT TERMINAL CLEARANCES

	Canadian Installations [1]	U.S. Installations [2]
A= Clearance above grade, veranda, porch, deck or balcony. (See 1.24.6-i(9)b.)	12 in. (30 cm)	12 in. (30 cm)
B= Clearance to window or door that may be opened.	6 in. (15 cm) for appliances 10,000 Btuh (3 kW), 12 in. (30 cm) for appliances > 10,000 Btuh (3 kW) and 100,000 Btuh (30 kW), 36 in. (91 cm) for appliances > 100,000 Btuh (30 kW).	6 in. (15 cm) for appliances 10,000 Btuh (3 kW), 9 in. (23 cm) for appliances > 10,000 Btuh (3 kW) and 50,000 Btuh (15 kW), 12 in. (30 cm) for appliances > 500,000 Btuh (15 kW).
C= Clearance to permanently closed window.	*	*
D= Vertical clearance to ventilated soffit located above the terminal within a horizontal distance of 2 feet (61 cm) from the center line of the terminal.	*	*
E= Clearance to unventilated soffit.	*	*
F= Clearance to outside corner.	*	*
G= Clearance to inside corner.	*	*
H= Clearance to each side of center line extended above meter/regulator assembly.	3 ft. (91 cm) within a height 15 ft. (4.5 m) above the meter/regulator assembly.	*

	Canadian Installations [1]	U.S. Installations [2]
I= Clearance to service regulator vent outlet.	3 ft. (91 cm).	*
J= Clearance to nonmechanical air supply inlet to building or the combustion air inlet to any other appliance.	6 in. (15 cm) for appliances 10,000 Btuh (3 kW), 12 in. (30 cm) for appliances > 10,000 Btuh (3kW) and 100,000 Btuh (30 kW), 36 in. (91 cm) for appliances > 100,000 Btuh (30 kW).	6 in. (15 cm) for appliances 10,000 Btuh (3 kW), 9 in. (23 cm) for appliances > 10,000 Btuh (3kW) and 50,000 Btuh (15 kW), 12 in. (30 cm) for appliances > 50,000 Btuh (15 kW).
K= Clearance to a mechanical air supply inlet.	6 ft. (1.83 m)	3 ft. (91 cm) above if within 10 ft. (3 m) horizontally.
L= Clearance above paved sidewalk or paved driveway located on public property.	7 ft. (2.13m) †	*
M= Clearance under veranda, porch, deck or balcony.	12 in. (30 cm) ‡	*

1 In accordance with the current *CSA B149.1, Natural Gas and Propane Installation Code.*

2 In accordance with the current *ANSI Z223.1/NFPA 54, National Fuel Gas Code.*

† A vent shall not terminate directly above a sidewalk or paved driveway that is located between two single fanily dwellings and serves both dwellings.

‡ Permitted only if veranda, porch, deck or balcony is fully open on a minimum of two sides beneath the floor.

* For clearances not specified in *ANSI Z223.1/NFPA 54* or *CSA B149.1*, the following statement shall be included:

"Clearance in accordance wtih local installation codes and the requirements of the gas supplier and the manufacturer's installation instruction."

OTHER THAN DIRECT VENT TERMINAL CLEARANCES

	Canadian Installations [1]	U.S. Installations [2]
A= Clearance above grade, veranda, porch, deck or balcony. (See 1.24.6-i(9)b.)	12 in. (30 cm)	12 in. (30 cm)
B= Clearance to window or door that may be opened.	6 in. (15 cm) for appliances 10,000 Btuh (3 kW), 12 in. (30 cm) for appliances > 10,000 Btuh (3 kW) and 100,000 Btuh (30 kW), 36 in. (91 cm) for appliances > 100,000 Btuh (30 kW).	4 ft. (1.2 m) below or to side of opening; 1 ft. (300 m) above opening.
C= Clearance to permanently closed window.	*	*
D= Vertical clearance to ventilated soffit located above the terminal within a horizontal distance of 2 feet (61 cm) from the center line of the terminal.	*	*
E= Clearance to unventilated soffit.	*	*
F= Clearance to outside corner.	*	*
G= Clearance to inside corner.	*	*
H= Clearance to each side of center line extended above meter/regulator assembly.	3 ft. (91 cm) within a height 15 ft. (4.5 m) above the meter/regulator assembly.	*

	Canadian Installations[1]	U.S. Installations[2]
I= Clearance to sevice regulator vent outlet.	3 ft. (91 cm).	*
J= Clearance to nonmechanical air supply inlet to building or the combustion air inlet to any other appliance.	6 in. (15 cm) for appliances 10,000 Btuh (3 kW), 12 in. (30 cm) for appliances > 10,000 Btuh (3kW) and 100,000 Btuh (30 kW), 36 in. (91 cm) for appliances > 100,000 Btuh (30 kW).	4 ft. (1.2 m) below or to side of opening; 1 ft. (300 m) above opening.
K= Clearance to a mechanical air supply inlet.	6 ft. (1.83 m)	3 ft. (91 cm) above if within 10 ft. (3 m) horizontally.
L= Clearance above paved sidewalk or paved driveway located on public property.	7 ft. (2.13m) †	7 ft. (2.13m)
M= Clearance under veranda, porch, deck or balcony.	12 in. (30 cm) ‡	*

1 In accordance with the current *CSA B149.1, Natural Gas and Propane Installation Code.*

2 In accordance with the current *ANSI Z223.1/NFPA 54, National Fuel Gas Code.*

† A vent shall not terminate directly above a sidewalk or paveable driveway that is located between two single family dwellings and serves both dwelling.

‡ Permitted only if veranda, porch, deck or balcony is fully open on a minimum of two sides beneath the floor.

* For clearances not specified in *ANSI Z223.1/NFPA 54* or *CSA B149.1*, the following statement shall be included:

"Clearance in accordance wtih local installation codes and the requirements of the gas supplier and the manufacturer's installation instruction."

PRODUCT DESIGN

Condensate Drain Lines & Drain Trap

A condensing gas furnace achieves its high level of efficiency by extracting heat from the products of combustion to the point where condensation takes place. The condensate must be collected in the furnace drain trap and routed to an appropriate drain location in compliance with local and national codes.

Follow the bullets listed below when installing the drain system. Refer to the following sections for specific details concerning furnace drain trap installation and drain hose hook ups.

- The drain trap supplied with the furnace must be used.
- The drain trap must be primed at time of installation.
- The drain line between furnace and drain location must meet local and nation codes.
- The drain line between furnace and drain location must maintain a 1/4 inch per foot downward slope toward the drain.
- Do not trap the drain line in any other location than at the drain trap supplied with the furnace.
- If the drain line is routed through an area which may see temperatures near or below freezing, precautions must be taken to prevent condensate from freezing within the drain line.
- If an air conditioning coil is installed with the furnace, a common drain may be used. An open tee must be installed in the drain line, near the cooling coil, to relieve positive air pressure from the coil's plenum. This is necessary to prohibit any interference with the function of the furnace's drain trap.

Electrical Connections

WARNING

HIGH VOLTAGE !

TO AVOID THE RISK OF ELECTRICAL SHOCK, WIRING TO THE UNIT MUST BE POLARIZED AND GROUNDED.

WARNING

HIGH VOLTAGE !

TO AVOID PERSONAL INJURY OR DEATH DUE TO ELECTRICAL SHOCK, DISCONNECT ELECTRICAL POWER BEFORE SERVICING OR CHANGING ANY ELECTRICAL WIRING.

CAUTION

LABEL ALL WIRES PRIOR TO DISCONNECTION WHEN SERVICING CONTROLS. WIRING ERRORS CAN CAUSE IMPROPER AND DANGEROUS OPERATION. VERIFY PROPER OPERATION AFTER SERVICING.

WIRING HARNESS

The wiring harness is an integral part of this furnace. Field alteration to comply with electrical codes should not be required. Wires are color coded for identification purposes. Refer to the wiring diagram for wire routings. If any of the original wire as supplied with the furnace must be replaced, it must be replaced with wiring material having a temperature rating of at least 105° C. Any replacement wiring must be a copper conductor.

OPERATION

115 Volt Line Connections

Before proceeding with electrical connections, ensure that the supply voltage, frequency, and phase correspond to that specified on the unit rating plate. Power supply to the furnace must be NEC Class 1, and must comply with all applicable codes. The furnace must be electrically grounded in accordance with local codes or, in their absence, with the latest edition of The National Electric Code, ANSI NFPA 70 and/or The Canadian Electric Code CSA C22.1.

Use a separate fused branch electrical circuit containing properly sized wire, and fuse or circuit breaker. The fuse or circuit breaker must be sized in accordance with the maximum overcurrent protection specified on the unit rating plate. An electrical disconnect must be provided at the furnace location.

Connect hot, neutral, and ground wires as shown in the wiring diagram located on the unit's blower door. For direct vent applications, the cabinet opening to the junction box must be sealed air tight using either an UL approved bushing such as Heyco Liquid Tight or by applying non-reactive UL approved sealant to bushing.

Line polarity must be observed when making field connections. Line voltage connections can be made through either the right or left side panel. The furnace is shipped configured for a right side (left side for counterflows) electrical connection with the junction box located inside the burner compartment. To make electrical connections through the opposite side of the furnace, the junction box must be relocated to the other side of the burner compartment prior to making electrical connections. To relocate the junction box, follow the steps shown below.

NOTE: Wire routing must not to interfere with circulator blower operation, filter removal, or routine maintenance.

Junction Box Relocation

WARNING

Edges of sheet metal holes may be sharp. Use gloves as a precaution when removing hole plugs.

WARNING

To prevent personal injury or death due to electric shock, disconnect electrical power before installing or servicing this unit.

WARNING

HIGH VOLTAGE !

To avoid the risk of injury, electrical shock or death, the furnace must be electrically grounded in accordance with local codes or in their absence, with the latest edition of the National Electric Code.

Line voltage connections can be made through either the right or left side panel. The furnace is shipped configured for a right side electrical connection. To make electrical connections through the opposite side of the furnace, the junction box must be relocated to the left side prior to making electrical connections. To relocate the junction box, perform the following steps.

1. Remove the burner compartment door.
2. Remove and save the two screws securing the junction box to the side panel.
3. Relocate junction box and associated plugs and grommets to opposite side panel. Secure with screws removed in step 2.

WARNING

To avoid the risk of injury, electrical shock or death, the furnace must be electrically grounded in accordance with local codes or, in their absence, with the latest edition of the National Electrical Code.

To ensure proper unit grounding, the ground wire should run from the furnace ground screw located inside the furnace junction box all the way back to the electrical panel. **NOTE:** Do not use gas piping as an electrical ground. To confirm proper unit grounding, turn off the electrical power and perform the following check.

1. Measure resistance between the neutral (white) connection and one of the burners.
2. Resistance should measure 10 ohms or less.

This furnace is equipped with a blower door interlock switch which interrupts unit voltage when the blower door is opened for servicing. Do not defeat this switch.

24 Volt Thermostat Wiring

IMPORTANT NOTE

Wire routing must not interfere with circulator blower operation, filter removal or routine maintenance.
A removable plug connector is provided with the control to make thermostat wire connections. This plug may be removed, wire connections made to the plug, and replaced. It is STRONGLY recommended that multiple wires into a single terminal be connected with a wire nut and only one wire be inserted in the low volt connector. Failure to do so may result in intermittent operation.

OPERATION

IMPORTANT NOTE

DIP SWITCH #13 MUST BE SET TO MATCH THERMOSTAT TYPE. TO USE THE CTK01 COMMUNICATING THERMOSTAT, DIP SWITCH #13 MUST BE SET TO ON POSITION. THIS IS ALSO THE CORRECT SETTING FOR A NON-COMMUNICATING 2-STAGE THERMOSTAT. TO USE CTK02, CTK03 OR CTK04 MODULATING THERMOSTAT, CHECK TO MAKE SURE DIP SWITCH #13 IS IN THE OFF POSITION (FACTORY POSITION). THIS IS ALSO THE CORRECT POSITION WHEN USING A NON-COMMUNICATING SINGLE-STAGE THERMOSTAT.**

When installed with a non-communicating thermostat, the furnace integrated control module provides terminals for both "W1" and "W2", and "Y1" and "Y2" thermostat connections. This allows the furnace to support the following system applications: 'Two-Stage Heating Only', 'Two-Stage Heating with Single Stage Cooling', and 'Two-Stage Heating with Two-Stage Cooling'. Refer to the following figures for proper connections to the integrated control module.

Low voltage connections can be made through either the right or left side panel. Thermostat wiring entrance holes are located in the blower compartment. The following figure shows connections for a "heat/cool system".

This furnace is equipped with a 40 VA transformer to facilitate use with most cooling equipment. Consult the wiring diagram, located on the blower compartment door, for further details of 115 Volt and 24 Volt wiring.

NOTE: Use of ramping profiles requires a jumper between Y1 and O.

IMPORTANT NOTE

THERMOSTAT "R" REQUIRED IF OUTDOOR UNIT IS EQUIPPED WITH A COMFORT ALERT™ MODULE OR IF THE OUTDOOR UNIT IS A PART OF THE COMFORTNET™ FAMILY OF EQUIPMENT.

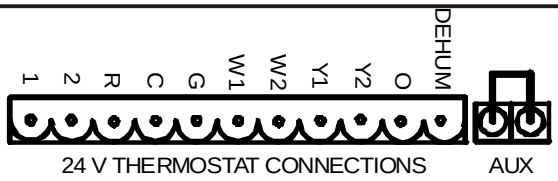

Low Voltage Connections with Auxiliary Terminals

The auxiliary contacts are shipped with a factory installed jumper. As an option, the auxiliary contacts may be wired to a normally closed float switch. In the event of open contacts, the furnace will be disabled until the condition is corrected. These are 24 volt terminals fed internally, do not apply another voltage source to these terminals.

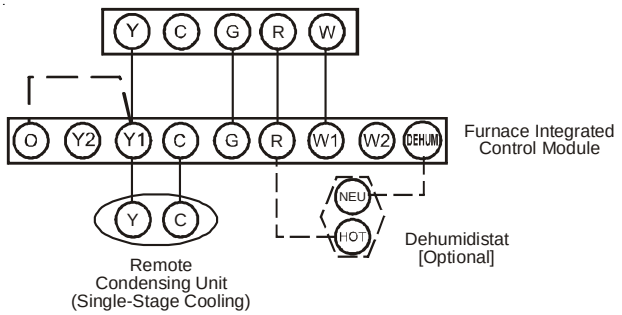

Thermostat - Single-Stage Heating with Single-Stage Cooling

IMPORTANT NOTE

TO APPLY A SINGLE-STAGE HEATING THERMOSTAT, THE THERMOSTAT SELECTOR SWITCH ON THE INTEGRATED CONTROL MODULE MUST BE SET ON SINGLE-STAGE.

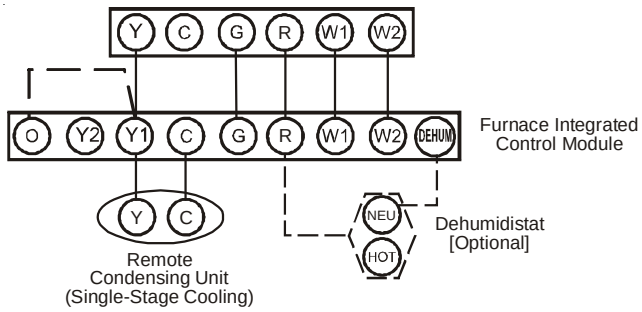

Thermostat - Two-Stage Heating with Single-Stage Cooling

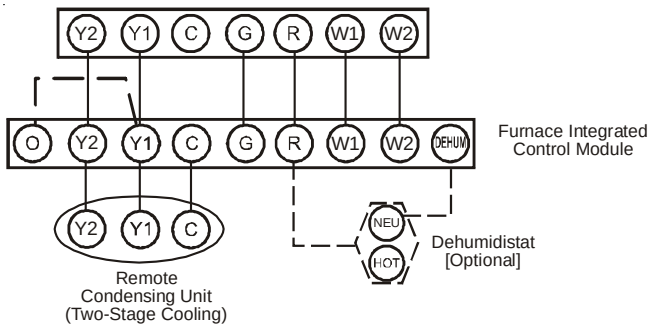

Thermostat - Two-Stage Heating with Two-Stage Cooling

Thermostat Wiring Diagrams

IMPORTANT NOTE

SET DIP SWITCH #14 TO ON POSITION WHEN USING A 2-STAGE COOLING THERMOSTAT.

OPERATION

Thermostat Application

The modulating furnace can be operated with a CTK01 communicating thermostat or a CTK02**, CTK03 or CTK04 communicating-modulating thermostat. It also facilitates operation with a non-communicating single or two stage heat / cool thermostat.

NOTE: DIP switch #13 (Heating thermostat selection)must be checked and set regardless of the thermostat chosen. Factory setting is OFF (single stage), this is also the correct position if using CTK02**, CTK03 and CTK04 thermostats. To use a CTK01 or a non-communicating two stage thermostat, set the switch to the ON position.

Operation with CTK03 & CTK04

1. Humidification Options are ON / OFF with the CTK03. When "On" is selected, the humidification relay on the furnace control board will function during a heat call if a humidity demand exists. Selecting "Off" means the humidification relay will not function.
2. If the CTK03 and CTK04 are set up so the compressor off delay is 0 min, it will display a cool / heat call immediately regardless of the delay built into the outdoor unit control board. This means the CTK03AA could show COOL ON when the outdoor unit is still in a delay period. The recommendation is to set up the compressor delay to at least 3 minutes
3. Dual Fuel – When the CTK03 and CTK04 call for gas heat, the heat pump will shut off, after a delay of approximately 3 minutes it will then turn on gas heat.
4. Dehumidification (lowering of CFM to 85%) only happens during low stage cooling operation. The dehumidification feature is not active during high stage cool. The CTK03 and CTK04 can be set up to overcool the home in order to reach the RH set point.

NOTE: In non-communicating installations with a condensing unit, DIP switch #14 must be checked and set to match a single or two stage condensing unit. Factory setting is OFF (single stage).

24 Volt Dehumidistat Wiring

The optional usage of a dehumidistat allows the furnace's circulator blower to operate at a slightly lower speed (85% of desired speed) during a combined thermostat call for cooling and dehumidistat call for dehumidification. This can be done through an independent dehumidistat or through a thermostat's DEHUM terminal (if available). This lower blower speed enhances dehumidification of the conditioned air as it passes through the AC coil. For proper function, a dehumidistat applied to this furnace must operate on 24 VAC and utilize a switch which *opens on humidity rise.* Refer to the "Thermostat Wiring Diagrams" figure for additional wiring details.

To install/connect a dehumidistat:

1. Turn OFF power to furnace.
2. Secure one dehumidistat lead to the terminal marked "DEHUM" on the furnace integrated control module.
3. Secure the other dehumidistat lead to the terminal marked "R" on the furnace integrated control module.
4. Secure the dehumidistat ground wire (typically the green lead) to the ground screw on the furnace junction box. **NOTE:** Ground wire may not be present on all dehumidistats.
5. Turn ON power to furnace.

To enable the dehumidify function on the integrated control module, set the dehumidification ENABLE DIP switch from OFF to ON.

Once the switch is set, the dehumidify function is enabled during a *combination* call for cooling (T-Stat) and dehumidification (DEHUM-Stat). Refer to the DIP switch chart in the back section of this manual.

Fossil Fuel Applications

This furnace can be used in conjunction with a heat pump in a fossil fuel application. A fossil fuel application refers to a combined gas furnace and heat pump installation which uses an outdoor temperature sensor to determine the most cost efficient means of heating (heat pump or gas furnace).

A heat pump thermostat with *three stages of heat* is required to properly use a two-stage furnace in conjunction with a heat pump. Refer to the fossil fuel kit installation instructions for additional thermostat requirements.

Strictly follow the wiring guidelines in the fossil fuel kit installation instructions. All furnace connections must be made to the furnace two-stage integrated control module and the "FURNACE" terminal strip on the fossil fuel control board.

115 Volt Line Connection of Accessories (Humidifier and Electronic Air Cleaner)

WARNING

HIGH VOLTAGE !

To avoid personal injury or death due to electrical shock, disconnect electrical power before servicing or changing any electrical wiring.

The furnace integrated control module is equipped with line voltage accessory terminals for controlling power to an electronic air cleaner.

The accessory load specifications are as follows. (The furnace control board also has a set of dry contacts for humidifier connection.)

Humidifier	1.0 Amp maximum at 120 VAC
Electronic Air Cleaner	1.0 Amp maximum at 120 VAC

Turn OFF power to the furnace before installing any accessories. Follow the humidifier or air cleaner manufacturers' instructions for locating, mounting, grounding, and controlling these accessories. Accessory wiring connections are to be made through the 1/4" quick connect terminals provided on the furnace integrated control module. The Electronic air cleaner hot terminal is identified as EAC. *It is necessary to remove the protective tab on the board cover to access the EAC Terminal.* The EAC neutral terminal is identified as NEUTRAL. A line voltage humidifier may be connected between one of the HUM contacts and NEUTRAL. The other HUM contact must be fed from the L1 terminal.

All field wiring must conform to applicable codes. Connections should be made as shown in the following figure.

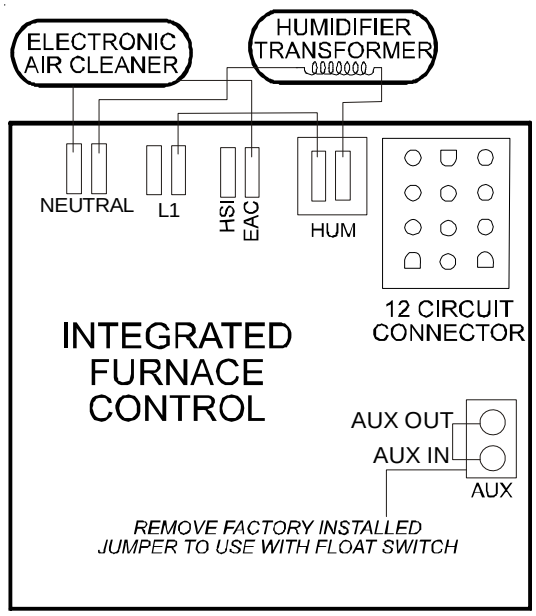

Accessories Wiring

If it is necessary for the installer to supply additional line voltage wiring to the inside of the furnace, the wiring must conform to all local codes, and have a minimum temperature rating of 105°C. All line voltage wire splices must be made inside the furnace junction box.

The integrated furnace control HUM (dry contacts) are closed whenever the inducer is energized in a non-communicating installation. When used with a CTK02**, CTK03 or CTK04 communicating thermostat, the HUM terminals are closed whenever there is a call for humidity. The integrated control module electronic air cleaner terminals (EAC) are energized with 115 volts whenever the circulator blower is energized.

24 Volt Humidifier

A 24 volt humidifier can be powered by feeding one of the HUM terminals with a field installed wire from the R terminal or by connecting to the NO side of the low fire pressure switch.

Gas Supply and Piping

The furnace rating plate includes the approved furnace gas input rating and gas types. The furnace must be equipped to operate on the type of gas applied. This includes any conversion kits required for alternate fuels and/or high altitude.

CAUTION

To prevent unreliable operation or equipment damage, the inlet gas supply pressure must be as specified on the unit rating plate with all other household gas fired appliances operating.

Inlet gas supply pressures must be maintained within the ranges specified in the following table. The supply pressure must be constant and available with all other household gas fired appliances operating. The minimum gas supply pressure must be maintained to prevent unreliable ignition. The maximum must not be exceeded to prevent unit overfiring.

Inlet Gas Supply Pressure		
Natural Gas	Minimum: 4.5" w.c.	Maximum: 10.0" w.c.
Propane Gas	Minimum: 11.0" w.c.	Maximum: 13.0" w.c.

Propane Gas Conversion

WARNING

Possible property damage, personal injury or death may occur if the correct conversion kits are not installed. The appropriate kits must be applied to ensure safe and proper furnace operation. All conversions must be performed by a qualified installer or service agency.

Gas Piping Connections

WARNING

To avoid possible unsatisfactory operation of equipment damage due to underfiring or equipment, use the proper size of natural/propane gas piping needed when running pipe from the meter/tank to the furnace.

The gas piping supplying the furnace must be properly sized based on the gas flow required, specific gravity of the gas, and length of the run. The gas line installation must comply with local codes, or in their absence, with the latest edition of the National Fuel Gas Code, NFPA 54/ANSI Z223.1.

Natural Gas Capacity of Pipe
In Cubic Feet of Gas Per Hour (CFH)

Length of Pipe in Feet	Nominal Black Pipe Size				
	1/2"	3/4"	1"	1 1/4"	1 1/2"
10	132	278	520	1050	1600
20	92	190	350	730	1100
30	73	152	285	590	980
40	63	130	245	500	760
50	56	115	215	440	670
60	50	105	195	400	610
70	46	96	180	370	560
80	43	90	170	350	530
90	40	84	160	320	490
100	38	79	150	305	460

(Pressure 0.5 psig or less and pressure drop of 0.3" W.C.; Based on 0.60 Specific Gravity Gas)

$$CFH = \frac{\text{BTUH Furnace Input}}{\text{Heating Value of Gas (BTU/Cubic Foot)}}$$

To connect the furnace to the building's gas piping, the installer must supply a ground joint union, drip leg, manual shutoff valve, and line and fittings to connect to gas valve. In some cases, the installer may also need to supply a transition piece from 1/2" pipe to a larger pipe size.

The following stipulations apply when connecting gas piping.

- Gas piping must be supported external to the furnace cabinet so that the weight of the gas line does not distort the burner rack, manifold or gas valve.
- Use black iron or steel pipe and fittings for building piping. Where possible, use new pipe that is properly chamfered, reamed, and free of burrs and chips. If old pipe is used, be sure it is clean and free of rust, scale, burrs, chips, and old pipe joint compound.
- Use pipe joint compound on male threads ONLY. Always use pipe joint compound (pipe dope) that is APPROVED FOR ALL GASSES. DO NOT apply compound to the first two threads.
- Use ground joint unions.
- Install a drip leg to trap dirt and moisture before it can enter the gas valve. The drip leg must be a minimum of three inches long.
- Install a 1/8" NPT pipe plug fitting, accessible for test gage connection, immediately upstream of the gas supply connection to the furnace.
- Always use a back-up wrench when making the connection to the gas valve to keep it from turning. The orientation of the gas valve on the manifold must be maintained as shipped from the factory. Maximum torque for the gas valve connection is 375 in-lbs; excessive over-tightening may damage the gas valve.
- Install a manual shutoff valve between the gas meter and unit within six feet of the unit. If a union is installed, the union must be downstream of the manual shutoff valve, between the shutoff valve and the furnace.
- Tighten all joints securely.
- Connect the furnace to the building piping by one of the following methods:
  - Rigid metallic pipe and fittings.
  - Semi-rigid metallic tubing and metallic fittings. Aluminum alloy tubing must not be used in exterior locations. In order to seal the grommet cabinet penetration, rigid pipe must be used to reach the outside of the cabinet. A semi-rigid connector to the gas piping may be used from there.
- Use listed gas appliance connectors in accordance with their instructions. Connectors must be fully in the same room as the furnace.
- Protect connectors and semirigid tubing against physical and thermal damage when installed. Ensure aluminum-alloy tubing and connectors are coated to protect against external corrosion when in contact with masonry, plaster, or insulation, or subjected to repeated wetting by liquids such as water (except rain water), detergents, or sewage.

WARNING

EDGES OF SHEET METAL HOLES MAY BE SHARP. USE GLOVES AS A PRECAUTION WHEN REMOVING HOLE PLUGS.

GAS PIPING CHECKS

Before placing unit in operation, leak test the unit and gas connections.

WARNING

TO AVOID THE POSSIBILITY OF EXPLOSION OR FIRE, NEVER USE A MATCH OR OPEN FLAME TO TEST FOR LEAKS.

Check for leaks using an approved chloride-free soap and water solution, an electronic combustible gas detector, or other approved testing methods.

NOTE: Never exceed specified pressures for testing. Higher pressure may damage the gas valve and cause subsequent overfiring, resulting in heat exchanger failure.
Disconnect this unit and shutoff valve from the gas supply piping system before pressure testing the supply piping system with pressures in excess of 1/2 psig (3.48 kPa).

Isolate this unit from the gas supply piping system by closing its external manual gas shutoff valve before pressure testing supply piping system with test pressures equal to or less than 1/2 psig (3.48 kPA).

OPERATION

Propane Gas Tanks and Piping

WARNING

If the gas furnace is installed in a basement, an excavated area or confined space, it is strongly recommended to contact a propane supplier to install a gas detecting warning device in case of a gas leak.

- **Since propane gas is heavier than air, any leaking gas can settle in any low areas or confined spaces.**
- **Propane gas odorant may fade, making the gas undetectable except with a warning device.**

A gas detecting warning system is the only reliable way to detect a propane gas leak. Rust can reduce the level of odorant in propane gas. Do not rely on your sense of smell. Contact a local propane gas supplier about installing a gas detecting warning system. If the presence of gas is suspected, follow the instructions listed in the *Safety Precautions* section of this manual.

All propane gas equipment must conform to the safety standards of the National Board of Fire Underwriters, NBFU Manual 58.

For satisfactory operation, propane gas pressure must be 10" WC ± .5" WC at the furnace manifold with all gas appliances in operation. Maintaining proper gas pressure depends on three main factors:

1. Vaporization rate, depending on temperature of the liquid, and "wetted surface" area of the container or containers.
2. Proper pressure regulation. (Two-stage regulation is recommended for both cost and efficiency).
3. Pressure drop in lines between regulators, and between second stage regulator and the appliance. Pipe size will depend on length of pipe run and total load of all appliances.

Complete information regarding tank sizing for vaporization, recommended regulator settings, and pipe sizing is available from most regulator manufacturers and propane gas suppliers.

Use only pipe dope approved for both L.P. and natural gases.

Refer to the following illustration for typical propane gas installations and piping.

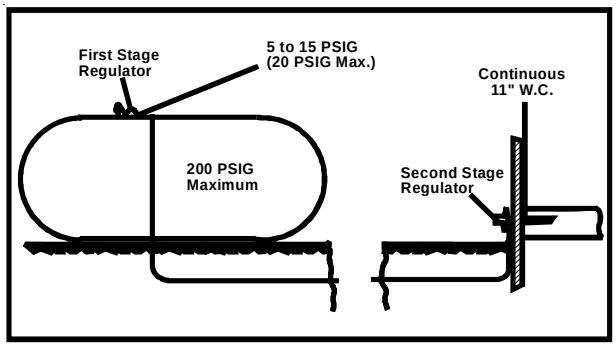

Propane Gas Installation (Typ.)

Sizing Between First and Second Stage Regulator*

Maximum Propane Capacities listed are based on 2 psig pressure drop at 10 psig setting. Capacities in 1,000 BTU/hour.

Pipe or Tubing Length Feet	Tubing Size, O.D. Type L					Nominal Pipe Size Schedule 40	
	3/8"	1/2"	5/8"	3/4"	7/8"	1/2"	3/4"
10	730	1,700	3,200	5,300	8,300	3,200	7,500
20	500	1,100	220	3,700	5,800	2,200	4,200
30	400	920	2,000	2,900	4,700	1,800	4,000
40	370	850	1,700	2,700	4,100	1,600	3,700
50	330	770	1,500	2,400	3,700	1,500	3,400
60	300	700	1,300	2,200	3,300	1,300	3,100
80	260	610	1,200	1,900	2,900	1,200	2,600
100	220	540	1,000	1,700	2,600	1,000	2,300
125	200	490	900	1,400	2,300	900	2,100
150	190	430	830	1,300	2,100	830	1,900
175	170	400	780	1,200	1,900	770	1,700
200	160	380	730	1,100	1,800	720	1,500

To convert to capacities at 15 psig settings - multiply by 1.130
To convert to capacities at 5 psig settings - multiply by 0.879

Propane Gas Piping Chart I

Sizing Between Second or Second Stage Regulator & Appliance*

Maximum Propane Capacities listed are based on 1/2" W.C. pressure drop at 11" W.C. setting. Capacities in 1,000 BTU/hour.

Pipe or Tubing Length Feet	Tubing Size, O.D. Type L					Nominal Pipe Size Schedule 40				
	3/8"	1/2"	5/8"	3/4"	7/8"	1/2"	3/4"	1"	1-1/4"	1-1/2"
10	39	92	199	329	501	275	567	1,071	2,205	3,307
20	26	62	131	216	346	189	393	732	1,496	2,299
30	21	50	107	181	277	152	315	590	1,212	1,858
40	19	41	90	145	233	129	267	504	1,039	1,559
50	18	37	79	131	198	114	237	448	913	1,417
60	16	35	72	1,211	187	103	217	409	834	1,275
80	13	29	62	104	155	89	185	346	724	1,066
100	11	26	55	90	138	78	162	307	630	976
125	10	24	48	81	122	69	146	275	567	866
150	9	21	43	72	109	63	132	252	511	787
200	8	19	39	66	100	54	112	209	439	665
250	8	17	36	60	93	48	100	185	390	590

*Data in accordance with NFPA pamphlet No. 54

Propane Gas Piping Chart II

Circulating Air & Filters

Duct work - Air Flow

WARNING

Never allow the products of combustion, including carbon monoxide, to enter the return duct work or circulation air supply.

Duct systems and register sizes must be properly designed for the CFM and external static pressure rating of the furnace. Design the ductwork in accordance with the recommended methods of "Air Conditioning Contractors of America" Manual D.

Install the duct system in accordance with Standards of the National Board of Fire Underwriters for the Installation of Air Conditioning, Warm Air Heating and Ventilating Systems. Pamphlets No. 90A and 90B.

OPERATION

A closed return duct system must be used, with the return duct connected to the furnace. **NOTE:** Ductwork must never be attached to the back of the furnace. For upflow installations requiring 1800 CFM or more, use either two side returns or bottom return or a combination of side /bottom. Flexible joints may be used for supply and return connections to reduce noise transmission. To prevent the blower from interfering with combustion air or draft when a central return is used, a connecting duct must be installed between the unit and the utility room wall. Never use a room, closet, or alcove as a return air chamber.

Checking Duct Static

Refer to your furnace rating plate for the maximum ESP (external duct static) rating.

Total external static refers to everything external to the furnace cabinet. Cooling coils, filters, ducts, grilles, registers must all be considered when reading your total external static pressure. The supply duct pressure must be read between the furnace and the cooling coil. This reading is usually taken by removing the "A" shaped block off plate from the end on the coil; drilling a test hole in it and reinstalling the block off plate. Take a duct static reading at the test hole. Tape up the test hole after your test is complete. The negative pressure must be read between the filter and the furnace blower.

Too much external static pressure will result in insufficient air that can cause excessive temperature rise. This can cause limit switch tripping and heat exchanger failure.

To determine total external duct static pressure, proceed as follows;

1. With clean filters in the furnace, use a draft gauge (inclined manometer) to measure the static pressure of the return duct at the inlet of the furnace. (Negative Pressure)
2. Measure the static pressure of the supply duct. (Positive Pressure)
3. The difference between the two numbers is .4" w.c.

Example:

static reading from return duct = -0.1" w.c.

static reading from supply duct = 0.3" w.c.

total external static pressure on this system = 0.4" w.c.

NOTE: Both readings may be taken simultaneously and read directly on the manometer if so desired. If an air conditioner coil or Electronic Air Cleaner is used in conjunction with the furnace, the readings must also include theses components, as shown in the following drawing.

4. Consult proper tables for the quantity of air.

If the total external static pressure exceeds the maximum listed on the furnace rating plate, check for closed dampers, registers, undersized and/or oversized poorly laid out duct work.

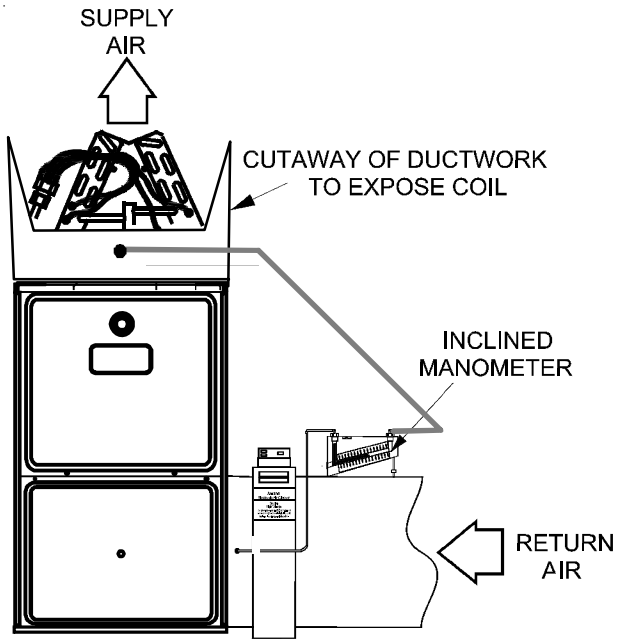

Checking Static Pressure

Bottom Return Air Opening [Upflow Models]

The bottom return air opening on upflow models utilizes a "lance and cut" method to remove sheet metal from the duct opening in the base pan. To remove, simply press out the lanced sections by hand to expose the metal strips retaining the sheet metal over the duct opening. Using tin snips, cut the metal strips and remove the sheet metal covering the duct opening. In the corners of the opening, cut the sheet metal along the scribe lines to free the duct flanges. Using the scribe line along the duct flange as a guide, unfold the duct flanges around the perimeter of the opening using a pair of seamer pliers or seamer tongs. **NOTE:** Airflow area will be reduced by approximately 18% if duct flanges are not unfolded. This could cause performance issues and noise issues.

WARNING

Edges of sheet metal holes may be sharp. Use gloves as a precaution when removing sheet metal from return air openings.

OPERATION

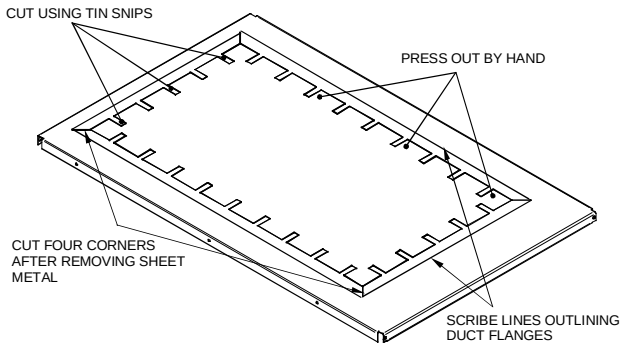

Duct Flange Cut Outs

When a cooling coil is installed with the furnace, it must be installed in the supply air to avoid condensation from occuring in the heat exchanger.

When the furnace is installed without a cooling coil, it is recommended that a removable access panel be provided in the outlet air duct. This opening shall be accessible when the furnace is installed and shall be of such a size that the heat exchanger can be viewed for visual light inspection or such that a sampling probe can be inserted into the airstream. The access panel must be made to prevent air leaks when the furnace is in operation.

When the furnace is heating, the temperature of the return air entering the furnace must be between 55°F and 100°F.

Filters - Read This Section Before Installing The Return Air Duct work

Filters must be used with this furnace. Discuss filter maintenance with the building owner. Filters do not ship with this furnace, but must be provided, sized and installed externally by the installer. Filters must comply with UL900 or CAN/ULCS111 standards. If the furnace is installed without filters, the warranty will be voided.

On upflow units, guide dimples locate the side return cutout locations. Use a straight edge to scribe lines connecting the dimples. Cut out the opening on these lines. **NOTE:** An undersized opening will cause reduced airflow.

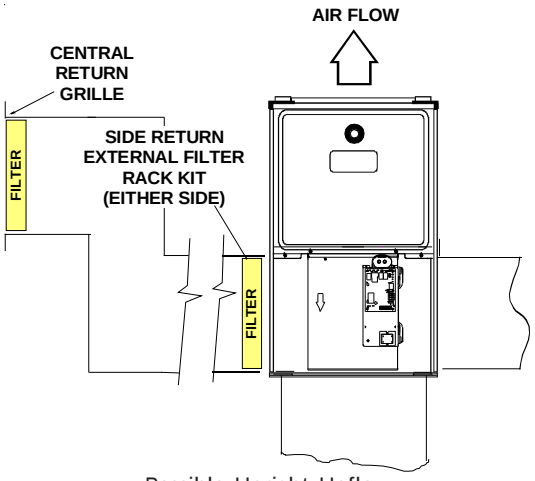

Possible Upright Upflow

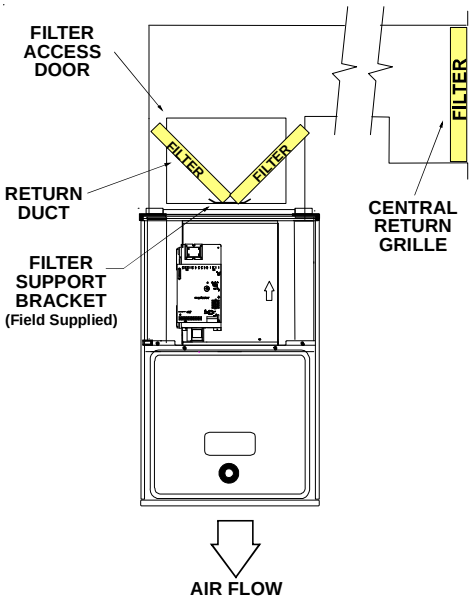

Possible Upright Counterflow
Filter Locations

Startup Procedure

Before placing any furnace into service for the first time or after performing service on an existing furnace, the building gas piping system, building piping connection to the furnace, and gas train inside the furnace cabinet must be proven safe and leak free. Verifying a leak free status is most thoroughly accomplished when a combination of approved methods is used, meter dial test, electronic gas leak detector, liquid leak detector solution.

The furnace must have a 115 volt power supply properly connected and grounded. Line and Neutral polarity must be correct

OPERATION

Upon power up, all segments in the dual seven segment display will illuminate briefly and then display ON, indicating the furnace is standing by & ready to receive commands from the thermostat. Once a call for heat is received by the furnace control board, the furnace will enter a “calibration routine” The calibration routine allows the furnace to adapt to the installed venting and combustion air piping. The inducer will ramp up and down momentarily to determine what the closing points and opening points of the pressure switches are compared to inducer RPM. The calibration routine is described in detail on page 43. The illustrations following show firing rates with 24 volt legacy thermostats as well as with communicating thermostats.

Modulating furnaces light off at 80% firing rate. The dual seven segment display will alternate showing:

1. Current Operating Mode; H = legacy or communicating call for heat

   C = communicating call for cooling, C1 / C2 legacy call for cooling (Y + G + O)

   P1 / P2 = legacy call for heat - heat pump (Y + G)

   F = call for constant fan
2. Gas heat firing rate % (35% - HI 100%)
3. A = (demand for supply air)
4. Air Quantity (Single or double digit displayed = CFM X 100)

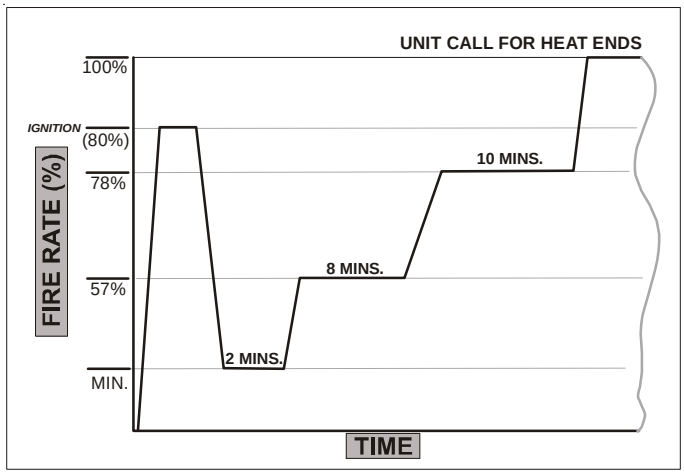

Operation with Conventional 1-Stage Thermostat
(DIP switch selections 1-Stage heat)

Call for heat, thermostat energizes W1 on IFC (W2 input is ignored).

After a successful Light Off Sequence and expiration of the Ignition Stabilization Period:

- After 2 minutes, the IFC increases to 57% at a rate of 1% per second
- After 10 total minutes, the IFC increases to 78% at a rate of 1% per second.
- After 20 total minutes, the IFC increases to 100% at a rate of 1% per second for the remainder of the call for heat.
- The circulator is adjusted to the appropriate CFM, corresponding to the current firing rate.

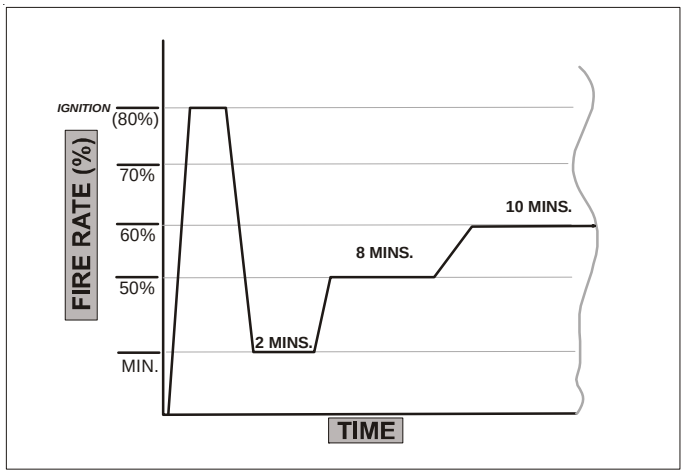

Operation with Conventional 2-Stage Thermostat
(DIP switch selects 2-stage heat)

Call for 1st-Stage Heat - Thermostat contacts close R to W1.

After a successful Light Off Sequence and expiration of the Ignition Stabilization Period:

- The IFC adjusts to the low firing rate.
- After 2 minutes, the IFC increases to 50% fort he next 8 minutes.
- Thereafter, the IFC will increase 10%, at a rate of 1% per second, every 10 minutes for the remainder of the call for heat (See above figure).
- The circulator is adjusted to the appropriate CFM, corresponding to the current firing rate.

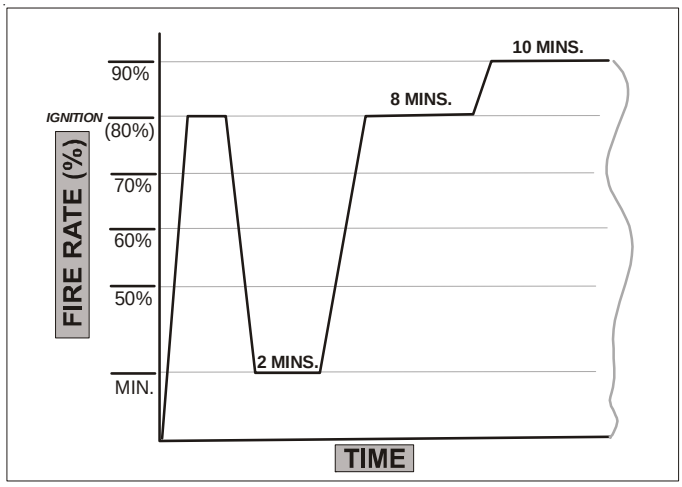

Operation with Conventional 2-Stage Thermostat
(DIP switch selects 2-stage heat)

Call for 2nd-Stage Heat - Thermostat contacts close R to W1 and W2.

After a successful Light Off Sequence and expiration of the Ignition Stabilization Period:

- The IFC adjusts to the low firing rate.
- After 2 minutes, the IFC increases to 80%.
- Thereafter, the IFC will increase 10%, at a rate of 1% per second, every 10 minutes for the remainder of the call for heat.
- The circulator is adjusted to the appropriate CFM, corresponding to the current firing rate.

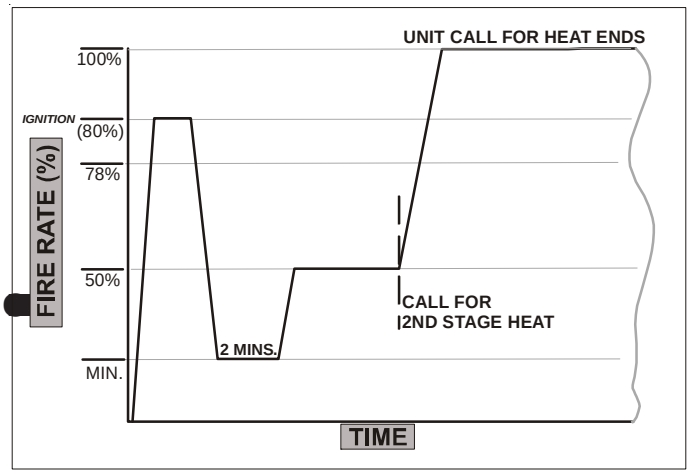

Call for 2nd-Stage Heat with 1st-Stage call for heat call in progress, with conventional 2-Stage Thermostat.

- The IFC increases the firing rate to 100% at a rate of 1% per second for the remainder of the W2 call.
- The circulator is adjusted to the appropriate CFM, corresponding to the current firing rate.

Call for 2nd-Stage Heat satisfied; Call for 1st-Stage Heat remains.

- The IFC remains at the current firing rate until the 1st-Stage call for heat is satisfied.

Heating Operation with CTK01 Thermostat (Communicating)

- When the Thermostat Heat Setup DIP switch is set to 2-Stage heat, the IFC operation will be compatible with a CTK01communicating thermostat.
- When a call for heat is sent, the furnace will go through the Light Off Sequence, After the successful Light Off Sequence and expiration of the Ignition Stabilization Period:
- The IFC adjusts to the low firing rate.
- After 2 minutes, the IFC accepts the specific Heat Requested Demand.
- If the differential is equal to or less than 2 degrees, the IFC will follow the conventional 2-Stage algorithm, equivalent to a W1 request..
- If the heat differential is greater than 2 degrees, the IFC will follow the conventional 2-Stage algorithm, equivalent to a W2 request.
- The circulator will operate per the heat airflow profile.

Heating Operation with CTK02**, CTK03 & CTK04 Thermostat (Modulating Communicating)

- When the Thermostat Heat Setup DIP switch is set to 1-Stage heat, the IFC operation will be compatible with a modulating communicating thermostat (CTK02**).
- When a call for heat is sent, the furnace will go through the Light Off Sequence, After the successful Light Off Sequence and expiration of the Ignition Stabilization Period:
- The IFC adjusts to the low firing rate.
- After 2 minutes, the IFC accepts the specific Heat Requested Demand.
- If the differential is 2 degrees or less, the Heat Current Demand Status will show 50%.
- If the specific Heat Requested Demand is above 2 degrees, the Heat Current Demand Status will track the specific Heat Requested Demand.
- The circulator will operate per the heat airflow profile.

Drain Trap Priming

The drain trap must be primed prior to furnace startup. To prime, fill the drain trap with water. This ensures proper furnace drainage upon startup and prohibits the possibility of flue gases escaping through the drain system.

OPERATION

Gas Supply Pressure Measurement

CAUTION

To prevent unreliable operation or equipment damage, the inlet gas supply pressure must be as specified on the unit rating plate with all other household gas fired appliances operating.

The line pressure supplied to the gas valve must be within the range specified below. The supply pressure can be measured at the gas valve inlet pressure boss or at a hose fitting installed in the gas piping drip leg. The supply pressure must be measured with the burners operating. To measure the gas supply pressure, use the following procedure.

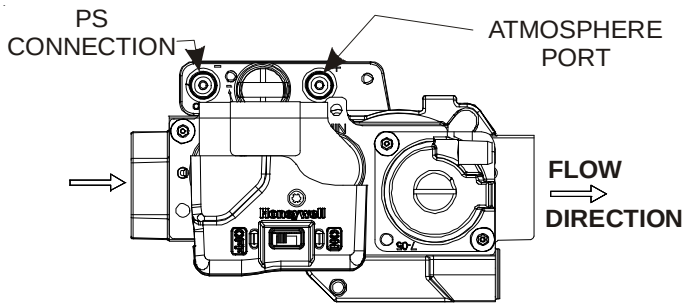

Honeywell Model VR9205R

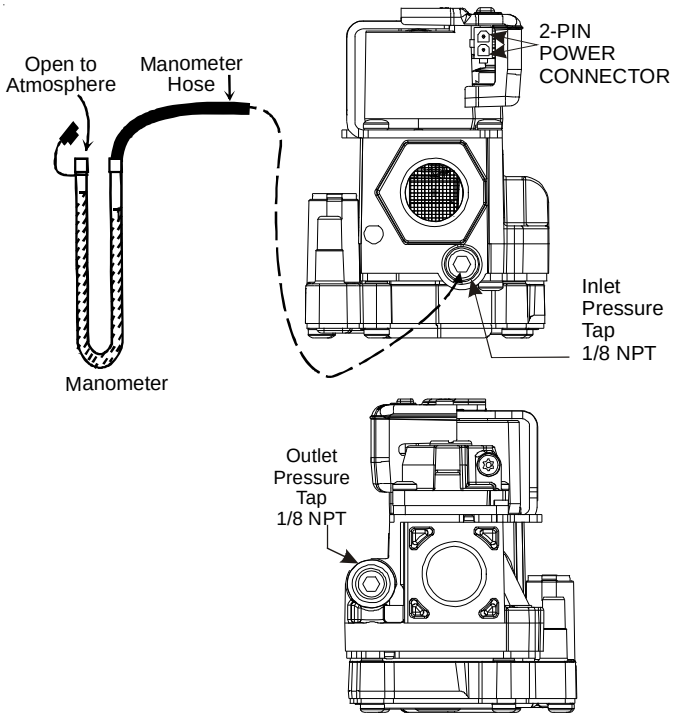

Honeywell Model VR9205R Connected to Manometer

1. Turn OFF gas to furnace at the manual gas shutoff valve external to the furnace.
2. Connect a calibrated water manometer (or appropriate gas pressure gauge) at either the gas valve inlet pressure boss or the gas piping drip leg. See Honeywell VR9205R gas valve figure for location of inlet pressure boss.

NOTE: If measuring gas pressure at the drip leg or Honeywell VR9205R gas valve, a field-supplied hose barb fitting must be installed prior to making the hose connection.

3. Turn ON the gas supply and operate the furnace and all other gas consuming appliances on the same gas supply line.

   Field Test Mode is intended to help a service person troubleshoot and check out an installed appliance.

   To enter Field Test Mode the Fault Recall Push-Button must be pressed twice within a 5 second period at any time during a heating cycle, at which time the display will show “Ft”. While the display is showing “Ft”, pressing and holding the Fault Recall Push-Button for 3 seconds will enable the field test mode and override the normal firing rate sequence at a rate of 100% for 5 minutes or until the end of the call for heat. The display will show the normal “Hi” while the control is firing at 100%. If the Fault Recall Push-Button has not been pressed within 5 seconds of displaying “Ft” the display will revert back to normal.

4. Measure furnace gas supply pressure with burners firing. Supply pressure must be within the range specified in the *Inlet Gas Supply Pressure* table.

Inlet Gas Supply Pressure		
Natural Gas	Minimum: 4.5" w.c.	Maximum: 10.0" w.c.
Propane Gas	Minimum: 11.0" w.c.	Maximum: 13.0" w.c.

If supply pressure differs from table, make the necessary adjustments to pressure regulator, gas piping size, etc., and/or consult with local gas utility.

5. Turn OFF gas to furnace at the manual shutoff valve and disconnect manometer. Reinstall plug before turning on gas to furnace.
6. Turn OFF any unnecessary gas appliances stated in step 3.

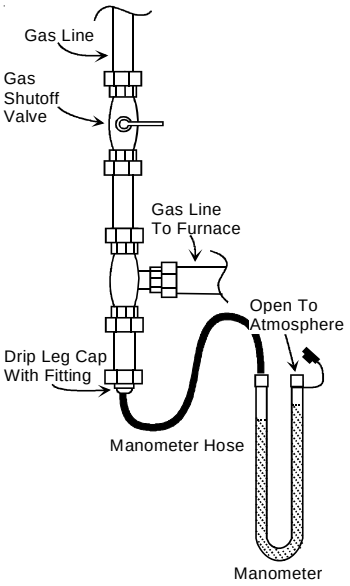

Measuring Inlet Gas Pressure (Alt. Method)

Gas Manifold Pressure Measurement

CAUTION

To prevent unreliable operation or equipment damage, the gas manifold pressure must be as specified on the unit rating plate. Gas valve is factory set and does NOT require any field adjustment. Do not attempt to adjust valve.

The manifold pressure must be measured with the burners operating. To measure the manifold pressure, use the following procedure.

1. Turn OFF gas to furnace at the manual gas shutoff valve external to the furnace.
2. Turn off all electrical power to the system.
3. Outlet pressure tap connections: Remove the outlet pressure boss plug. Install an 1/8" NPT hose barb fitting into the outlet pressure tap.
4. Attach a hose and manometer to the outlet pressure barb fitting.
5. Turn ON the gas supply.
6. Turn on power and close thermostat "R" and "W1" contacts to provide a call for low stage heat.
7. Modulating furnaces light at 80% of max input. For natural gas the expected manifold pressure at ignition will be in a range of 1.8" - 2.5" WC. For LP gas the range will be 5.8" - 6.8" WC.

   NOTE: Measure the gas manifold pressure with the burners firing. After every time the main power is turned off and back on, the furnace will enter a calibration routine on the next call for heat *The inducer will ramp up and down during the calibration routine. After calibration, the furnace will proceed to ignition cycle.*

Furnace Manifold Pressures

NATURAL GAS		
35%	=	.5" WC
50%	=	.9" WC
60%	=	1.25" WC
70%	=	1.70" WC
80%	=	2.20" WC
90%	=	2.80" WC
100%	=	3.50" WC

L.P. GAS		
35%	=	1.2" WC
50%	=	2.5" WC
60%	=	3.7" WC
70%	=	5.0" WC
80%	=	6.5" WC
90%	=	8.0" WC
100%	=	10.0" WC

8. Field Test Mode is intended to help a service person troubleshoot and check out an installed appliance by bringing the furnace up to High fire (100% input), bypassing the normal modulating routine.

   To enter Field Test Mode the Fault Recall Push-Button must be pressed twice within a 5 second period at any time during a heating cycle, at which time the display will show "Ft". While the display is showing "Ft", pressing and holding the Fault Recall Push-Button for 3 seconds will enable the field test mode and override the normal firing rate sequence at a rate of 100% for 5 minutes or until the end of the call for heat. The display will show the normal "Hi" while the control is firing at 100%. If the Fault Recall Push-Button has not been pressed within 5 seconds of displaying "Ft" the display will revert back to normal.

   NOTE: Gas valve is factory set and does NOT require any field adjustment. Do NOT attempt to adjust valve.

9. Turn off all electrical power and gas supply to the system.
10. Remove the manometer hose from the hose barb fitting.
11. Remove the 1/8" NPT hose barb fitting from the outlet pressure tap. Replace the outlet pressure boss plug and seal with a high quality thread sealer.
12. Turn on electrical power and gas supply to the system.

OPERATION

13. Close thermostat contacts “R” and “W1/W2” to energize the valve.

Using a leak detection solution or soap suds, check for leaks at outlet pressure boss plug. Bubbles forming indicate a leak. SHUT OFF GAS AND REPAIR ALL LEAKS IMMEDIATELY!

NOTE: For natural gas to LP conversion, consult the furnace Specification Sheet.

Manifold Gas Pressure			
Gas		Range	Nominal
Natural	High Stage	3.2 - 3.8" w.c.	3.5" w.c.
Propane	High Stage	9.5 - 10.5" w.c.	10.0" w.c.

Gas Input Rate Measurement (Natural Gas Only)

The gas input rate to the furnace must never be greater than that specified on the unit rating plate. To measure natural gas input using the gas meter, use the following procedure.

1. Turn OFF the gas supply to all other gas-burning appliances except the furnace.
2. While the furnace is operating, time and record one complete revolution of the smallest gas meter dial.
3. Calculate the number of seconds per cubic foot (sec/ft^3) of gas being delivered to the furnace. If the dial is a one cubic foot dial, divide the number of seconds recorded in step 2 by one. If the dial is a two cubic foot dial, divide the number of seconds recorded in step 2 by two.
4. Calculate the furnace input in BTUs per hour (BTU/hr). Input equals the sum of the installation’s gas heating value and a conversion factor (hours to seconds) divided by the number of seconds per cubic foot. The measured input must not be greater than the input indicated on the unit rating plate.

   EXAMPLE:

   Installation’s gas heating (HTG) value: 1,000 BTU/ft^3 (Obtained from gas supplier)

   Installation’s seconds per cubic foot: 34 sec/ ft^3

   Conversion Factor (hours to seconds): 3600 sec/hr

   Input = (Htg. value x 3600) ÷ seconds per cubic foot

   Input = (1,000 BTU/ft^3 x 3600 sec/hr) ÷ 34 sec/ ft^3

   Input = 106,000 BTU/hr

NOTE: The final manifold pressure cannot vary by more than ±0.3” w.c. for Natural and ± 0.5” for LP from the specified setting. Consult your local gas supplier if additional input rate adjustment is required.

5. Turn ON gas to and relight all other appliances turned off in step 1. Be certain that all appliances are functioning properly and that all pilot burners are operating.

Temperature Rise

Temperature rise must be within the range specified on the unit rating plate. An incorrect temperature rise may result in condensing in or overheating of the heat exchanger. An airflow and temperature rise table is provided in the Specification Sheet applicable to your model. Determine and adjust temperature rise as follows:

1. Operate furnace with burners firing for approximately ten minutes. Ensure all registers are open and all duct dampers are in their final (fully or partially open) position.
2. Place thermometers in the return and supply ducts as close to the furnace as possible. Thermometers must not be influenced by radiant heat by being able to “see” the heat exchanger.
3. Subtract the return air temperature from the supply air temperature to determine the air temperature rise. Allow adequate time for thermometer readings to stabilize.
4. Adjust temperature rise by adjusting the circulator blower speed. Increase blower speed to reduce temperature rise. Decrease blower speed to increase temperature rise. Refer to *Startup Procedure and Adjustment -Circulator Blower Speeds* for speed changing details.

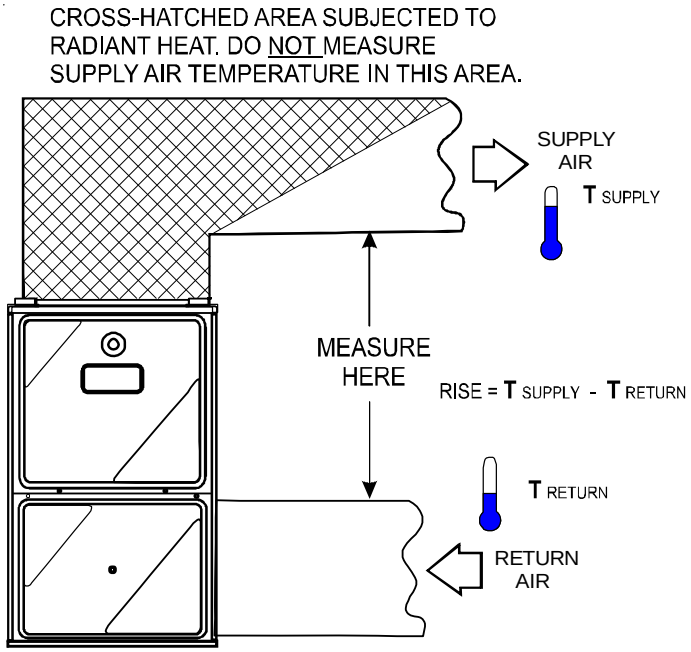

Temperature Rise Measurement

OPERATION

Circulator Blower Speeds

WARNING

To avoid personal injury or death due to electrical shock, turn OFF power to the furnace before changing speed taps.

This furnace is equipped with a multi-speed circulator blower. This blower provides ease in adjusting blower speeds. The heating blower speed is shipped set at "B", and the cooling blower speed is set at "D". These blower speeds should be adjusted by the installer to match the installation requirements so as to provide the correct heating temperature rise and correct cooling CFM.

Use the dual 7-segment LED display adjacent to the DIP switches to obtain the approximate airflow quantity. The airflow quantity is displayed as a number on the display, rounded to the nearest 100 CFM. The display alternates airflow delivery indication and the operating mode indication.

Example: The airflow being delivered is 1225 CFM. The display indicates 12. If the airflow being delivered is 1275, the display indicates 13.

1. Determine the tonnage of the cooling system installed with the furnace. If the cooling capacity is in BTU/hr divide it by 12,000 to convert capacity to TONs.

   Example: Cooling Capacity of 30,000 BTU/hr.

   30,000/12,000 = 2.5 Tons

2. Determine the proper air flow for the cooling system. Most cooling systems are designed to work with air flows between 350 and 450 CFM per ton. Most manufacturers recommend an air flow of about 400 CFM per ton.

   Example: 2.5 tons X 400 CFM per ton = 1000 CFM

The cooling system manufacturer's instructions must be checked for required air flow. Any electronic air cleaners or other devices may require specific air flows, consult installation instructions of those devices for requirements.

3. Knowing the furnace model, locate the high stage cooling air flow charts in the Specification Sheet applicable to your model. Look up the cooling air flow determined in step 2 and find the required cooling speed and adjustment setting.

   Example: A DM97MC furnace installed with a 2.5 ton air conditioning system. The air flow needed is 1000 CFM. Looking at the cooling speed chart for DM97MC, find the air flow closest to 1000 CFM. A cooling airflow of 1000 CFM can be attained by selecting the cooling speed "C" and the adjustment to "normal".

4. Continuous fan speed is selectable at 25%, 50%, 75% or 100% of the furnace's maximum airflow capability.

   Example: If the furnace's maximum airflow capability is 2000 CFM, the continuous fan speed will be 0.25 x 2000 or 500 CFM.

5. Locate the blower speed selection DIP switches on the integrated control module. Select the desired "cooling" speed tap by positioning switches 1 and 2 appropriately. Select the desired "adjust" tap by positioning switches 9 and 10 appropriately. Refer to the DIP switch chart for switch positions and their corresponding taps. Verify CFM by noting the number displayed on the dual 7-segment LED display.

6. The multi-speed circulator blower also offers several custom ON/OFF ramping profiles. These profiles may be used to enhance cooling performance and increase comfort level. The ramping profiles are selected using DIP switches 7 and 8. Refer to the following figure for switch positions and their corresponding taps. Refer to the bullet points below for a description of each ramping profile. Verify CFM by noting the number displayed on the dual 7-segment LED display.

- **Profile A** provides only an OFF delay of one (1) minute at 100% of the cooling demand airflow.

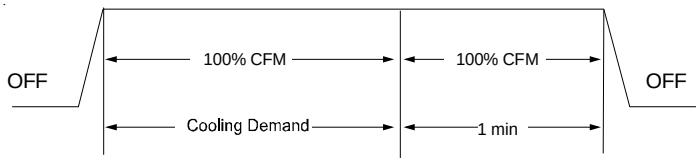

- **Profile B** ramps up to full cooling demand airflow by first stepping up to 50% of the full demand for 30 seconds. The motor then ramps to 100% of the required airflow. A one (1) minute OFF delay at 100% of the cooling airflow is provided.

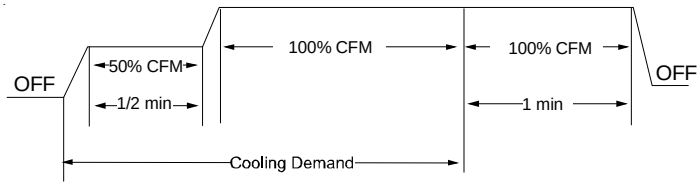

- **Profile C** ramps up to 85% of the full cooling demand airflow and operates there for approximately 7 1/2 minutes. The motor then steps up to the full demand airflow. Profile C also has a one (1) minute 100% OFF delay.

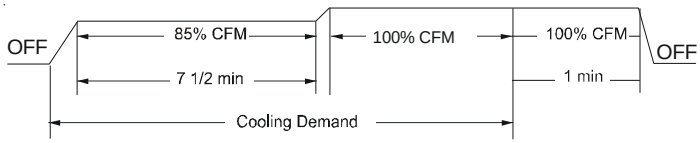

- **Profile D** ramps up to 50% of the demand for 1/2 minute, then ramps to 85% of the full cooling demand airflow and operates there for approximately 7 1/2 minutes. The motor then steps up to the full demand airflow. Profile D has a 1/2 minute at 50% airflow OFF delay.

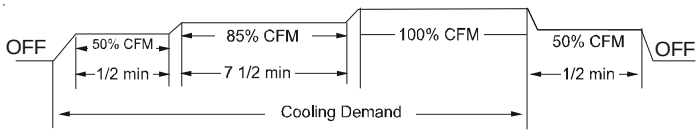

7. Select the heating speed for your model from the heating speed chart in the Specification Sheet. The "adjust" setting (already established by the cooling speed selection) determines which set of speeds are available. The selected speed must provide a temperature rise within the rise range listed with the particular model.
8. Select the desired "heating" speed tap by positioning switches 3 and 4 appropriately. Refer to figure above. Verify CFM by noting the number displayed on the dual 7-segment LED display.

In general lower heating speeds will: reduce electrical consumption, lower operating sound levels of the blower, and increase the outlet air temperature delivered to the home. The speeds available allow the blower performance to be optimized for the particular homeowner's needs.

DIP Switches

There are 18 DIP switches on the modulating furnace IFC. Switches are located in 3 rows, each having 6 switches. Switches are numbered from 1 to 18. The "ON" position is "UP'. The chart shows all 18 DIP switches, their function and their factory position.

Switches 1 & 2 Select cooling speed A, B, C or D. Factory setting is D (both switches up in the "ON" position. These switches are ignored when using a CTK0* communicating thermostat.

Switches 3 & 4 Select heating speed A, B, C or D. Factory setting is B (3 ON, 4 OFF) These switches are ignored when using a CTK0* communicating thermostat.

Switches 5 & 6 Select continuous fan speed A, B, C or D. Factory setting is B (5 ON, 6 OFF) These selections are based off of percentages of the maximum CFM that each model furnace is rated for; A = 25%, B = 50%, C = 75%, D = 100%. These switches are ignored when using a CTK0* communicating thermostat.

Switches 7 & 8 Select cooling ramping profiles A, B, C or D. Factory setting is A (both switches down in the "OFF" position).Each ramping profile provides a different routine for the indoor blower motor to follow in a call for cooling. Rather than bringing the motor up to cooling speed immediately, ramping profiles bring the motor up to cooling speed in stages.

NOTE: Reductions in CFM for ramping are not added to reductions in CFM for DEHUM. Example; CFM is reduced for the fist several minutes of a cooling call by 15%, if a call for DEHUM is present during this CFM reduction; CFM will not be reduced by another 15%. Rather, after the ramping time period has expired, the CFM would continue at the 15% reduction to satisfy the DEHUM request. These switches are ignored when using a CTK0* communicating thermostat .

Switches 9 & 10 Select CFM Trim Adjustment. Choices are 0%, + 10%, -10%. Factory setting is A. Trim adjustments add or subtract from the CFM selections made by heat and cool CFM selections. Trim adjustments affect cooling, and heating fan speeds. These switches are ignored when using a CTK0* communicating thermostat .

Switches 11 & 12 Select fan off delay in heat. Choices are 90, 120, 150, or 180 seconds. Factory setting is C, 150 seconds. These switches are ignored when using a CTK0* communicating thermostat.

Switch 13 Selects thermostat type for heating. Factory setting for this switch is OFF, this is the correct setting for a conventional single stage stat or a CTK02**, CTK03 and CTK04 communicating-modulating stats. To use a conventional two stage heating thermostat or a CTK01 thermostat, move this switch to the ON position.

Switch 14 Selects compressor setup for cooling. Factory position is OFF. This is the correct position for a single stage condensing unit. In this position, Y from the room thermostat would connect to Y1 on the IFC. Full CFM selected by switches 1 & 2 will be delivered during a Y1 call. If using a two stage outdoor unit, move this switch to the ON position and wire Y1 from the room stat to Y1 on the IFC, wire Y2 on the room stat to Y2 on the IFC. This switch is ignored when using a CTK0* communicating thermostat.

Switch 15 Selects DEHUM. Enabling this feature will reduce CFM in a call for cooling by 15%. Factory position is OFF, in this position DEHUM is disabled. To use this feature the DIP switch must be turned to the ON position and a normally closed dehumidistat be used. This switch is ignored when using a CTK0* communicating thermostat.

Switches 16, 17, 18 These are system switches critical to the ClimateTalk™ communicating network and must be left in the factory enabled ON position.

DIP Switches

Switch Bank	Purpose	Function	Dip Switch 1	2	3	4	5	6	7	8	9	10	11	12	13	14	15	16	17	18
1	Cooling Speed Tap	A	OFF	OFF	---	---	---	---	---	---	---	---	---	---	---	---	---	---	---	---
		B	ON	OFF	---	---	---	---	---	---	---	---	---	---	---	---	---	---	---	---
		C	OFF	ON	---	---	---	---	---	---	---	---	---	---	---	---	---	---	---	---
		D	**ON**	**ON**	---	---	---	---	---	---	---	---	---	---	---	---	---	---	---	---
	Heating Speed Tap	A	---	---	OFF	OFF	---	---	---	---	---	---	---	---	---	---	---	---	---	---
		B	---	---	**ON**	**OFF**	---	---	---	---	---	---	---	---	---	---	---	---	---	---
		C	---	---	OFF	ON	---	---	---	---	---	---	---	---	---	---	---	---	---	---
		D	---	---	ON	ON	---	---	---	---	---	---	---	---	---	---	---	---	---	---
	Continuous Fan Speed Tap	A	---	---	---	---	OFF	OFF	---	---	---	---	---	---	---	---	---	---	---	---
		B	---	---	---	---	**ON**	**OFF**	---	---	---	---	---	---	---	---	---	---	---	---
		C	---	---	---	---	OFF	ON	---	---	---	---	---	---	---	---	---	---	---	---
		D	---	---	---	---	ON	ON	---	---	---	---	---	---	---	---	---	---	---	---
2	Cooling Ramping	A	---	---	---	---	---	---	**OFF**	**OFF**	---	---	---	---	---	---	---	---	---	---
		B	---	---	---	---	---	---	ON	OFF	---	---	---	---	---	---	---	---	---	---
		C	---	---	---	---	---	---	OFF	ON	---	---	---	---	---	---	---	---	---	---
		D	---	---	---	---	---	---	ON	ON	---	---	---	---	---	---	---	---	---	---
	Adjust Taps	0 Trim Adjust	---	---	---	---	---	---	---	---	**OFF**	**OFF**	---	---	---	---	---	---	---	---
		Plus 10%	---	---	---	---	---	---	---	---	ON	OFF	---	---	---	---	---	---	---	---
		Minus 10%	---	---	---	---	---	---	---	---	OFF	ON	---	---	---	---	---	---	---	---
		0 Trim Adjust	---	---	---	---	---	---	---	---	ON	ON	---	---	---	---	---	---	---	---
	Heat Off Delay	90 Seconds	---	---	---	---	---	---	---	---	---	---	OFF	OFF	---	---	---	---	---	---
		120 Seconds	---	---	---	---	---	---	---	---	---	---	ON	OFF	---	---	---	---	---	---
		150 Seconds	---	---	---	---	---	---	---	---	---	---	**OFF**	**ON**	---	---	---	---	---	---
		180 Seconds	---	---	---	---	---	---	---	---	---	---	ON	ON	---	---	---	---	---	---
3	T-Stat Heat	1 Stage Stat	---	---	---	---	---	---	---	---	---	---	---	---	**OFF**	---	---	---	---	---
		2 Stage Stat	---	---	---	---	---	---	---	---	---	---	---	---	ON	---	---	---	---	---
	Compressor	1-Stage Compressor	---	---	---	---	---	---	---	---	---	---	---	---	---	**OFF**	---	---	---	---
		2-Stage Compressor	---	---	---	---	---	---	---	---	---	---	---	---	---	ON	---	---	---	---
	Dehum	Disabled	---	---	---	---	---	---	---	---	---	---	---	---	---	---	**OFF**	---	---	---
		Enabled	---	---	---	---	---	---	---	---	---	---	---	---	---	---	ON	---	---	---
	Bias	Disabled	---	---	---	---	---	---	---	---	---	---	---	---	---	---	---	OFF	---	---
		Enabled	---	---	---	---	---	---	---	---	---	---	---	---	---	---	---	**ON**	---	---
	Pull Up	Disabled	---	---	---	---	---	---	---	---	---	---	---	---	---	---	---	---	OFF	---
		Enabled	---	---	---	---	---	---	---	---	---	---	---	---	---	---	---	---	**ON**	---
	Pull Down	Disabled	---	---	---	---	---	---	---	---	---	---	---	---	---	---	---	---	---	OFF
		Enabled	---	---	---	---	---	---	---	---	---	---	---	---	---	---	---	---	---	**ON**

--- Not applicable (Indicates factory setting)

Communicating thermostats are used only with Bias, Pull Up, Pull Down dip switches.

OPERATION

System	System Operating Mode	Airflow Demand Source
Air Conditioner + Furnace	Cooling	Air Conditioner
	Heating	Furnace
	Continuous Fan	Thermostat
Heat Pump + Furnace	Cooling	Heat Pump
	Heat Pump Heating Only	Heat Pump
	Auxiliary Heating	Furnace
	Continuous Fan	Thermostat
Furnace + Non-Comm 1stg Air Conditioner	Cooling	Furnace
	Heating	Furnace
	Continuous Fan	Thermostat

For example, assume the system is an air conditioner matched with a furnace. With a call for low stage cooling, the air conditioner will calculate the system's low stage cooling airflow demand. The air conditioner will then send a fan request along with the low stage cooling airflow demand to the furnace. Once received, the furnace will send the low stage cooling airflow demand to the ECM motor. The ECM motor then delivers the low stage cooling airflow. See the applicable ComfortNet air conditioner or heat pump installation manual for the airflow delivered during cooling or heat pump heating.

In continuous fan mode, the CTK0* thermostat provides the airflow demand. The CTK02**, CTK03 and CTK04 thermostats may be configured for one of threecontinuous fan speed settings allow for 25%, 50% or 75% airflow, based on the furnaces' maximum airflow capability. During continuous fan operation, the thermostat sends a fan request along with the continuous fan demand to the furnace. The furnace, in turn, sends the demand to the ECM motor. The ECM motor delivers the requested continuous fan airflow.

Fossil Fuel Applications

This furnace can be used in conjunction with a ComfortNet™ compatible heat pump in a fossil fuel application. A fossil fuel application refers to a combined gas furnace and heat pump installation which uses an outdoor temperature sensor to determine the most cost efficient means of heating (heat pump or gas furnace). When used with the CTK0* thermostat, the furnace/heat pump system is automatically configured as a fossil fuel system. The balance point temperature may be adjusted via the CTK0* thermostat advanced user menus (see CTK0* instructions for additional information).

CTK0* Wiring

NOTE: Refer to *Electrical Connections* for 115 volt line connections to the furnace.

NOTE: A removable plug connector is provided with the control to make thermostat wire connections. This plug may be removed, wire connections made to the plug, and replaced. Multiple wires imust be twisted together prior to inserting into the plug connector. Failure to do so may result in intermittent operation.

Typical 18 AWG thermostat wire may be used to wire the system components. One hundred (100) feet is the maximum length of wire between indoor unit and outdoor unit, or between indoor unit and thermostat. Wire runs over (100) feet require larger gauge wire.

Four-Wire Indoor and Outdoor Wiring

Typical ComfortNet wiring will consist of four wires between the indoor unit and outdoor unit and between the indoor unit and thermostat. The required wires are: (a) data lines, 1 and 2; (b) thermostat "R" (24 VAC hot) and "C" (24 VAC common).

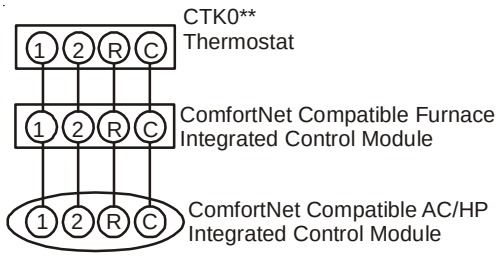

System Wiring using Four-Wires

Two-Wire Outdoor, Four-Wire Indoor Wiring

Two wires can be utilized between the indoor and outdoor units. For this wiring scheme, only the data lines, 1 and 2, are needed between the indoor and outdoor units. A 40VA, 208/230 VAC to 24VAC transformer must be installed in the outdoor unit to provide 24VAC power to the outdoor unit's electronic control. The transformer is included with the CTK01AA, CTK03 and CTK04 kits. See kit instructions for mounting and wiring instructions. If using a CTK02 or CTK01BA, an accessory transformer is available (TFK01). Four wires are required between the indoor unit and thermostat.

NOTE: Use of the CTK0* transformer is recommended if installing a dual fuel/fossil fuel system. Failure to use the transformer in the outdoor unit could result in over loading of the furnace transformer.

OPERATION

1st Stage Cooling – Conventional Thermostat

- A call for cooling is signaled by:
- R powering Y1 and O simultaneously
- R powering Y1, O and G simultaneously
- The compressor and condenser fan are energized directly from the Y1 terminal from the thermostat.
- The circulator is energized after cool fan on delay.
- If the '2 Stage Cooling' DIP switch is set to:
- ON, then circulator will run at low cooling speed with Y1 request
- OFF, then circulator will run at high cooling speed with Y1 request (a Y2 request will be ignored)
- The circulator will operate according to one of the selectable ramping profiles.
- When the cool request is satisfied, the circulator is de-energized per one of the selectable ramping profiles.

2nd Stage Cooling – Conventional Thermostat

- The '2 Stage Cooling' DIP switch on the IFC must be ON to enable 2 stage cooling control with a conventional thermostat.
- A call for 2nd stage cooling is signaled by the shorting of R to Y2 while a valid call for first stage cooling exists.
- After the cool fan on delay, the circulator is energized at the low cooling speed when the 1st stage cool request is detected and switches to high cooling speed immediately after the 2nd stage cool request is detected.
- The circulator will be controlled according to the selected ramping profile.
- When the cool requests are satisfied, the circulator is de-energized per the selected ramping profile.

Cooling Operation with a Communicating Thermostat and Conventional Single Stage A/C

- The call for cooling will be communicated via the ClimateTalk™ protocol.
- The Y1 terminal of the IFC becomes an output via the on board Y1 relay
- The IFC does not provide short cycle protection.
- The circulator operates as commanded by the communicating thermostat.

Cooling Operation with a Communicating Thermostat and Outdoor Unit

- The furnace receives the CFM demand from the communicating outdoor unit.

Call for Cool with Call for Heat Present – Dual Fuel

Defrost Operation

- While in defrost, the standard light off sequence will be followed. The IFC will then fire at 100% for the remainder of the defrost call.
- While in defrost the circulator will use the selected heat speed.

Fan Mode

Conventional Thermostat

Two seconds after G request becomes active without Y1 request, IFC will run the circulator at the appropriate speed (as selected by the DIP switches), unless circulator is running as a result of Heat or Cool mode. The circulator speed required by the heat or cool demand always has priority over G speed.

Communicating Thermostat

If a conventional G request is present without a heat or cool request from the communicating thermostat, the circulator will run at the selected fan speed.

Humidity Control

Humidifier Output – Conventional Thermostat

One set of isolated relay contacts are wired to a pair of terminals for connection to a humidifier. When the inducer is on the IFC closes the humidifier relay contacts, except from the calibration routine where the humidifier relay contacts are always open.

Humidifier Output – Communicating Thermostat

One set of isolated relay contacts are wired to a pair of terminals for connection to a humidifier. Upon receipt of a Humidification Requested Demand the IFC will:

- Close the humidifier relay contacts
- Energize the circulator at the circulation speed (G speed) unless the circulator is commanded to a different speed by a heat demand.

Dehumidification – Conventional Thermostat

- DEHUM functionality is enabled by a DIP switch setting.
- The IFC varies circulator speed operation based on the DEHUM signal from the thermostat
- If 24VAC (R) is not connected to DEHUM (through a Humidistat) and both Y1 and O terminals are energized, then the IFC control reduces the cooling CFM by 15%.
- If both Y1 and O terminals are not energized, the DEHUM signal is ignored
- DEHUM is ignored during any heating request.

OPERATION

Learn Push-Button

Pressing the learn button re-sets the communicating network and allows the IFC to search for communicating equipment The press and release of the button starts the same learning process as during power-up of the system.

ClimateTalk™ Communication LEDs

The IFC has two LEDs :

- Red communications LED – Indicates the status of the network
- OFF is normal condition.
- 2 slow flashes on power-up: ON for ¼ second, OFF for ¾ second, ON for ¼ second, OFF.
- Continuous slow flash indicates communication failure: ON for ¼ second, OFF for ¾ second...
- Green receive LED – Indicates network traffic
- Fast, sporadic flashes indicates normal bus communication.
- ON solid indicates a Data 1 / Data 2 miswire.

Model	Tap	Low Stage Cool	High Stage Cool	Low Stage Heat	High Stage Heat
DM97MC0603BN**	A	398	599	667	953
	B	557	817	740	1059
	C	696	1007	808	1158
	D	810	1212	881	1260
DM97MC0803BN**	A	403	629	855	1202
	B	540	806	923	1316
	C	705	1023	1033	1389
	D	819	1230	1063	1396
DM97MC0804CN**	A	513	789	867	1228
	B	660	967	939	1337
	C	791	1182	1016	1430
	D	913	1375	1077	1516
DM97MC1005CN**	A	564	820	1256	1818
	B	784	1133	1292	1870
	C	982	1464	1316	1910
	D	1259	1736	1358	1957
DM97MC1205DN**	A	547	867	1329	1891
	B	831	1160	1362	1940
	C	1020	1467	1390	1968
	D	1278	1910	1440	2028
DC97MC0603BN**	A	433	656	687	938
	B	541	790	751	950
	C	686	972	814	986
	D	806	1195	874	992
DC97MC0803BN**	A	405	624	758	1057
	B	549	808	815	1146
	C	678	994	882	1256
	D	784	1177	946	1349
DC97MC0804CN**	A	556	837	889	1234
	B	714	1022	944	1325
	C	838	1206	1019	1442
	D	991	1475	1068	1528
DC97MC1005CN**	A	524	784	1209	1759
	B	744	1078	1249	1797
	C	927	1388	1277	1840
	D	1185	1766	1300	1881

Airflow Table

Blower Heat Off Delay Timings

The integrated control module provides a selectable heat off delay function. The heat off delay period may be set to 90, 120, 150, 180 seconds using the DIP switches or jumper provided on the control module. The delay is factory shipped at 150 seconds but may be changed to suit the installation requirements and/or homeowner preference.

ComfortNet System

Overview

NOTE: *DIP switch #13* ***MUST*** *be set to match thermostat type. To use the CTK01 communicating thermostat, DIP switch #13 must be set to ON position. This is also the correct setting for a non-communicating 2-stage thermo-*

*stat. To use the CTK02**, CTK03 & CTK04 modulating thermostat, check to make sure DIP switch #13 is in the OFF position (factory position). This is also the correct position when using a non-communicating single stage thermostat.*

The ComfortNet system is a system that includes a ComfortNet compatible furnace and air conditioner or heat pump with a CTK0* thermostat. A valid ComfortNet system could also be a compatible furnace, CTK0* communicating, single stage air conditioner. Any other system configurations are considered invalid ComfortNet systems and must be connected as a traditional (or non-communicating) system (*see Electrical Connections* for wiring connections).

A ComfortNet heating/air conditioning system differs from a non-communicating/traditional system in the manner in which the indoor unit, outdoor unit and thermostat interact with one another. In a traditional system, the thermostat sends commands to the indoor and outdoor units via analog 24 VAC signals. It is a one-way communication path in that the indoor and outdoor units typically do not return information to the thermostat.

The indoor unit, outdoor unit and thermostat comprising a ComfortNet system "communicate" digitally with one another, creating a two-way communications path. The thermostat still sends commands to the indoor and outdoor units. However, the thermostat may also request and receive information from both the indoor and outdoor units. This information may be displayed on the ComfortNet thermostat. The indoor and outdoor units also interact with one another. The outdoor unit may send commands to or request information from the indoor unit. This two-way digital communications between the thermostat and subsystems (indoor/outdoor unit) and between subsystems is the key to unlocking the benefits and features of the ComfortNet system.

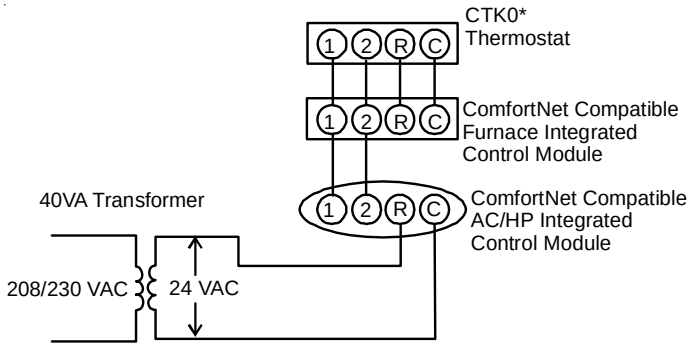

System Wiring using Two-Wires between Furnace and AC/HP and Four-Wires between Furnace and Thermostat

ComfortNet Compatible Furnace with Non-ComfortNet Single-Stage Air Conditioner

Four wires are required between the furnace and thermostat. Two wires are required between the furnace control and single stage air conditioner. For this system configuration, the "Y1" terminal on the integrated furnace control becomes an output rather than an input. The "Y1" connection to the outdoor unit is made using both 4-position thermostat connectors in the CTK0* kit. Remove the red keying tabs from the on-board connector block and position both 4-position connector such that "1", "2", "R", "C", and "Y1" positions are filled.

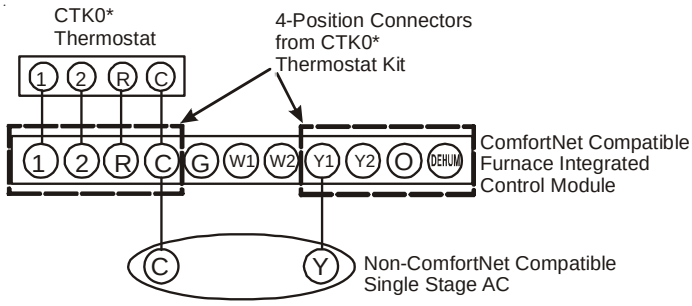

System Wiring between Furnace and Non-Communicating Compatible Single Stage Air Conditioner

Pressure Switch Calibration Routine The modulating furnace must go through a pressure switch calibration routine before it can begin its first heat cycle. This is performed automatically by the furnace and requires no action on the part of the installer other than to have the system components installed completely and correctly. On the initial power up, or any time that power to the furnace is switched off then back on again and a call for heat is applied, the furnace will go through a calibration routine. During the calibration routine the IFC runs the induced draft blower at different speeds to determine the opening and closing points of the pressure switches. It records this information and uses it as reference points for determining the draft inducer speeds for all gas input rates from 35% - 100%.

Before beginning a calibration routine, the IFC will check that both pressure switches are in the open position.

- The IFC powers the draft inducer at a predetermined speed and checks to see if the LPS has closed.
- If the LPS is not closed the IFC will increase the draft inducer RPM in small steps until it detects a closed LPS.
- The IFC then begins to reduce RPM until it detects that the HPS is open.
- It records the RPM point where the HPS went open.
- The IFC then adds a predetermined amount of draft inducer RPM to both the recorded points.
- These new RPM points are the draft inducer speed for 35% (lowest input rate) and 100% (highest input rate).

  The IFC then is able to control draft inducer speed through the IFC-VFD throughout the entire range of modulating operation.

OPERATION

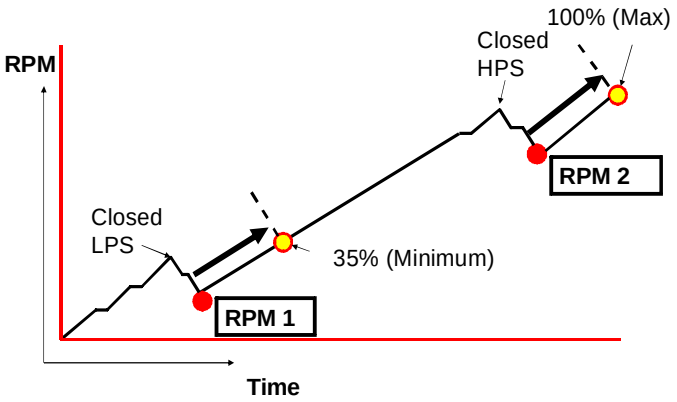

Inducer Calibration Routine

Abbreviations and Definitions

- **IFC**: Integrated furnace control
- **HSI**: Hot surface element
- **LPS**: Low pressure switch
- **IDB**: Induced draft blower
- **HPS**: High pressure switch
- **Variable Frequency Drive (VFD)**: Control of the induced draft blower is carried out by Variable Frequency Drive. By varying the voltage and frequency to the draft inducer, the RPM can be controlled. A section of the IFC is dedicated to this task.
- **Trial for Ignition Period (TFI)**: The period of time between initiation of gas flow and the action to shut off the gas flow in the event of failure to establish proof of the supervised ignition source or the supervised main burner flame.
- **Gas Valve Sequence Period:** The total period of time of gas flow starting from the first initiation of gas to the final action to shut off the gas before going to lockout.
- **Ignition Activation Period (IAP)**: The period between energizing the main gas valve and deactivation of the ignition source prior to the end of TFI.
- **Flame Recognition Period (FRP)**: The period between deactivation of the ignition source and the expiration of the TFI.
- **Flame Failure Response Time (FFRT)**: The period between loss of the supervised main burner flame and the action to shut off the gas supply.
- **Igniter Warm-up Time**: The length of time allowed for the hot surface igniter to heat up prior to the initiation of gas flow.
- **Pre-purge Time**: The period of time intended to allow for the dissipation of any unburned gas or residual products of combustion at the beginning of a furnace operating cycle prior to initiating ignition. Beginning from the moment the pressure switch is sensed closed and lasting until the ignition source is energized.
- **Inter-purge Time**: The period of time intended to allow for the dissipation of any unburned gas or residual products of combustion, just prior to initiating ignition retries during the Ignition Retries sequence.
- **Post-purge Time**: The period of time to allow for the dissipation of any unburned gas or residual products of combustion at the end of a furnace burner operating cycle. Post-purge begins at the loss of flame sense.
- **Ignition Stabilization Period** – The period between sensing of the main burner flame and the transition from the Ignition Firing Rate to the Target Firing Rate.
- **Ignition Recycles**: The additional attempts within the same thermostat cycle for ignition after loss of the supervised ignition source or the supervised main burner flame.
- **Ignition Retries**: The additional attempts within the same thermostat cycle for ignition when the supervised main burner flame is not proven within the Trial for Ignition Period.
- **Low Fire Rate**: The lowest firing rate the IFC controls to during a heating cycle.
- **High Firing Rate:** The maximum firing rate that an installed appliance can attain based on manifold orifices and the high pressure switch setting.
- **Ignition Firing Rate:** The target firing rate at which the appliance always lights off. The appliance stays at this firing rate until the Ignition Stabilization Period expires. It then moves to the target firing rate called for by the operating sequence.
- **Target Firing Rate:** The firing rate that the IFC controls the inducer to attain at a given time in the operating sequence.
- **Heat Fan On Delay**: The period between proof of the supervised main burner flame and the activation of the blower motor at the low heat speed.
- **Heat Fan Off Delay**: The period between the loss of supervised main burner flame after the call for heat has ended and the deactivation of the blower motor.
- **2nd Stage On Delay**: This applies to systems configured for 1-stage thermostats. The length of time operating in normal low fire mode before switching to mid fire mode.
- **Auto Restart Delay**: The time delay waited before the control is able to perform a new trial for ignition in the case of Soft Lockout.
- **Soft Lockout**: A state caused a system fault such as loss of flame or pressure switch failure .

- **Hard Lockout**: A state caused by a failure internal to the control or by a system fault such as a flame rollout
- **Fault Debouncing Time**: The period between a system fault occurring and the IFC recognizing the fault has occurred. This time varies depending on the specific fault.
- **Factory Shared Data**: Data used by a ClimateTalk™ device for specific configuration parameters. This data will be programmed in at the factory.

Heat Exchanger Prepurge	15 sec	---
HSI Warm Up	17 sec	Same for all trials
Ignition Activation Period	3 sec	---
Flame Recognition Period	1 sec	---
Trial For Ignition	4 sec	TFI = IAP + FRP
Gas Valve Sequence Period	12 sec	---
Ignition Stabilization Period	10 sec	---
Flame Debounce Period	2 sec	Time it takes to debounce flame presence or failure
Post-purge	29 sec	---
Inter-purge	30 sec	---
Auto Restart Delay	60 min	---
Ignition Retries	2	3 trials total
Ignition Recycles – Flame Failure	2	3 flame losses total
Flame Failure Response Time	2 sec max	@ 1uA

Other Parameters		---
Low Fire Rate	35%	% of target high fire rate
Ignition Fire Rate	80%	% of target high fire rate
High Fire Rate	100%	---

Ignition Activation Chart

Ignition Retries:

When flame is not sensed during the Trial for Ignition Period:

- The valve is de-energized.
- The inducer remains energized at ignition speed during the Inter-purge Period.
- The circulator if already running remains energized at the current CFM for the circulator fan off delay period.
- When the Inter-purge Period expires, the control proceeds to the HSI Warm-up and then a new Trial for Ignition is started again for up to a maximum of two additional trials (3 attempts total). After the third Trial for Ignition has failed to light the burner the IFC proceeds to Soft Lockout through the Post-purge where the inducer remains energized at the ignition speed. Error code "E0" is flashed during the Soft Lockout period.

  The retry count is cleared if flame is sensed for longer than 10 seconds after exiting Trial for Ignition, or upon exit of Soft Lockout.

Ignition Recycles:

When flame is established during Trial for Ignition, and then lost:

- The gas valve is de-energized.
- The inducer moves to the ignition speed and holds for the Inter-purge Period.
- The circulator if already running remains energized at the current CFM for the circulator fan off delay period.
- When the Inter-purge Period expires, the control proceeds to the HSI Warm-up and then a new Trial for Ignition is started.
- A maximum of two recycles (3 flame losses) are allowed on a single call for heat before the control proceeds to Soft Lockout through the Post-purge where the inducer remains energized at the current speed. Error code "E0" is flashed during the Soft Lockout period.
- The recycle count is not cleared until the current demand for heat is satisfied or upon exit of Soft Lockout.

Rollout Circuit Operation

If the manual reset rollout switch circuit opens during a heating cycle:

- The valve is immediately de-energized.
- The inducer will run for the Post-purge period at its current speed
- If the circulator fan is on it will run for the normal fan off delay at the current heat speed.
- An error code is logged and displayed indicating the rollout switch circuit has opened.
- All future thermostat heat requests are ignored..

  The IFC will remain in this state until the rollout switch closes. Once the manual rollout switch has been reset the IFC will clear the error code and return to normal operation.

If the rollout switch circuit opens in any mode, other than Heat, it will be ignored.

Limit Switch Operation

If the limit switch circuit is open during a heating cycle:

- The valve is immediately de-energized.
- The inducer will run for the Post-purge period at its current speed.
- The circulator is immediately energized at high heat speed. The IFC will remain in this state until the limit switch circuit closes.

- The IFC logs and displays an error code indicating the limit circuit is open.
- Once the limit switch circuit closes and a call for heat is present, a new ignition sequence is started and the circulator will remain energized for the selected fan off delay. If the burner is lit before expiration of the selected fan off delay, the fan off timing is stopped and the circulator will adjust to the speed requested by the heating sequence.

If the limit switch circuit opens in any mode, other than Heat, it will be ignored.

Pressure Switch Configuration

- The IFC monitors the contacts of a SPST (single pole single throw) low pressure switch with a set point that ensures the switch will be closed at approximately 35% of the firing rate of the furnace.
- The IFC monitors the contacts of a SPST high pressure switch with a set point that ensures the switch will be closed at approximately 100% of the firing rate of the furnace.

H Fitting

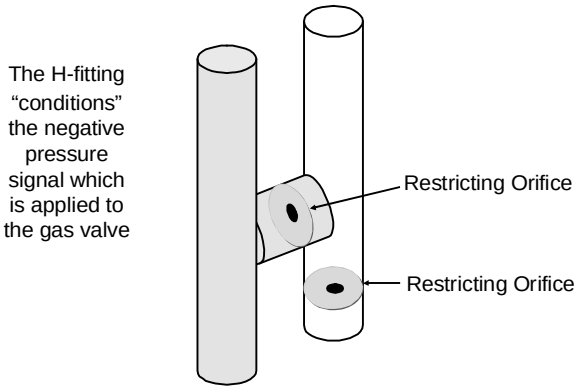

"H" Fitting

The low pressure switch assembly includes an H fitting assembly and tubing that provides pressure signals to the Honeywell amplified gas/air gas valve. The H fitting contains an orifice which conditions the negative air pressure controlling the gas valve. This has the effect of allowing only smooth changes in air pressure to reach the gas valve.

Low Pressure Switch Operation

- If a call for heat exists and the low pressure switch is closed already (before the ignition sequence has begun), the IFC will wait 5 minutes. After the 5 minute delay, and if the LPS is still closed, the IFC will log and display an error code indicating the low pressure switch is stuck closed. When the LPS is sensed open, the IFC clears the error code and resumes normal operation.

If the ignition sequence has begun and the low pressure switch fails to close within 30 seconds, the IFC logs and displays an error code indicating the low pressure switch is stuck open. The inducer continues to run for a total of 5 minutes, at which time the IFC de-energizes the inducer and then attempts the Calibration routine immediately. If during the 5 minute interval LPS is sensed closed or call for heat is removed, the IFC clears the error code and resumes normal operation.

High Pressure Switch Operation

- High Pressure Switch action is used to determine the inducer speed required to achieve the 100% firing rate of the appliance. The determination is made by the IFC during the calibration process.
- The HPS must remain closed during 100% fire operation. If it opens during 100% fire operation, the IFC will increase the inducer speed at a rate of 1% per sec in an attempt to re-close the pressure switch up to the maximum allowed RPM. If the HPS is re-closed successfully, the IFC will complete the Heat mode and perform the Calibration routine on the next call for heat. If the HPS remains open, the IFC will end the Heat mode through the Post-purge and perform the Calibration routine immediately (error code "E9" is flashed until calibration routine is successful).
- High Pressure Switch check takes place during the Calibration routine. If the switch is stuck open or closed calibration will not be completed and the appropriate error code will be logged and displayed.

Hot Surface Igniter Operation

The IFC energizes a relay to control the line voltage Hot Surface Igniter. The HSI warm up time will be fixed for all ignition trials. Both the continuity of the igniter and the ability of the relay to energize the igniter are continuously monitored during the Igniter Warm-up and Ignition Activation Periods.

ECM Motor

An Emerson® UltraTech® four wire indoor fan motor provides supply air to the conditioned space. This is the same motor used on previous generation communicating furnaces.

The ECM motor consists of two sections;

1. A motor body containing 3 phase motor windings
2. An electronic control module (end bell).

In the event of a non-operating motor; the following items should be checked. There are two harnesses which connect the blower motor to the IFC. The line voltage (5 Pin) harness provides 115 volts directly off of the IFC L1 and neutral terminals on ½ hp ECM motors. On furnaces with ¾ and 1 HP ECM motors, L1 is fed to the motor through an inductor coil. The inductor coil conditions the power supply to the motor smoothing out spikes and electrical noise. The low voltage harness is a 4 wire harness that supplies

SERVICE & OPERATION

12 volts DC to terminals 1 & 4 of the motor and communicating signals on terminals 3 & 4.

WARNING

THE CONTROL MODULE CONTAINS COMPONENTS WHICH CAN HOLD AN ELECTRICAL CHARGE FOR SEVERAL MINUTES. BEFORE THE MOTOR IS TAKEN APART, IT MUST BE ALLOWED TO DISSIPATE VOLTAGE BY WAITING FIVE MINUTES BEFORE IT IS INSPECTED INTERNALLY. THE END BELL CAN BE SEPARATED FROM THE MOTOR BODY BY REMOVING THE THREE SCREWS WHICH JOIN THEM. ONCE THE SCREWS ARE REMOVED, THE INTERANL HARNESS CAN BE SEPARATED. THE CONTROL MODULE AND MOTOR CAN THEN BE INSPECTED SEPARATELY.

The motor contains three windings of equal resistance + / - 10%. Resistance between windings is generally less than 10 ohms and will vary between models. To take this reading; the ohm meter leads are placed in the wiring harness, previously disconnected from the internal control unit connector.

Inspect capacitors inside the control unit for bulging or swollen caps. The end bell should be replaced if components appear swollen or bulging. A functioning control unit should have a phase to phase resistance of greater than 100K between any two pins. A separated control unit is shown below. To take this reading; the ohm meter leads are placed in the end bell socket and not in the wiring harness.

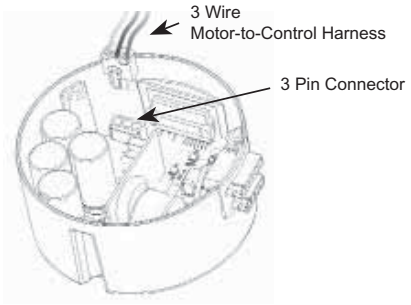

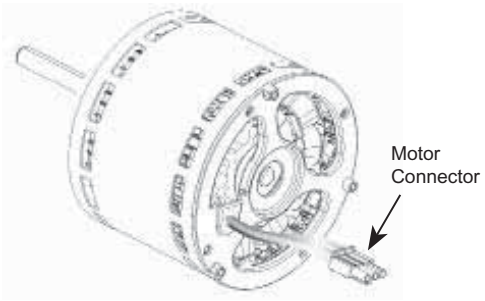

Beyond basic visual checks and voltage / resistance checks; the Emerson ECM motor may be tested with an Emerson UltraCheck-EZ™ diagnostic tool (Part UTT-01). This tool will test the motor windings and also the communicating module of the motor.

USING THE EMERSON® ULTRACHECK-EZ™ DIAGNOSTIC TOOL

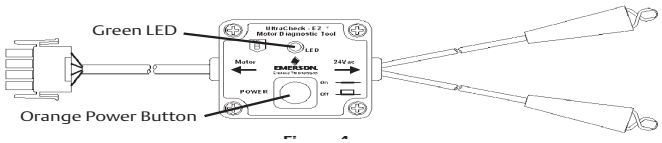

Emerson® Ultracheck-EZ™ Diagnostic Tool

- Turn off power to the furnace being serviced and verify with a volt meter
- Disconnect the 4 wire communication cable from the motor control unit (end bell)
- Connect the 4 wire connector of the diagnostic tool to the end bell communicating connector
- Attach one of the alligator clips of the diagnostic tool to the 24 volt hot terminal of the furnace transformer and the other alligator clip to the 24 volt common (ground) terminal. The alligator clips are not polarity sensitive
- Turn ON furnace power.
- The orange button of the diagnostic tool sends a signal to the UltraTech® motor to rotate when pressed. There may be a five second delay between the time the button is pressed and the motor begins to rotate. If the orange button does not illuminate when pressed, the tool is not connected to a 24 volt supply or it is defective. The GREEN LED is an indicating signal that communication is taking place. If the green LED does not blink, the end bell should be replaced.

OPERATIONAL CHECKS

LED	LED Status	Indication	Possible Causes	Corrective Action(s)
Red Communications LED	Off	• Normal condition	• None	• None
	2 Flashes	• Out-of-box reset	• Control power up • Learn button depressed	• None
Green Receive LED	Rapid Flashing	• Normal network traffic	• Control is “talking” on network as expected	• None
	On Solid	• Data 1/ Data 2 miss-wire	• Data 1 and data 2 wires reversed at furnace, thermostat or communicating compatible outdoor AC/HP • Short between data 1 and data 2 wires. • Short between data 1 or data 2 wires and R (24VAC) or C (24VAC common).	• Check communications wiring (data 1/ data 2 wires). • Check wire connections at terminal block • Check data 1/ data 2 voltages.

Operational Checks

Burner Flame

The burner flames should be inspected with the burner compartment door installed. Flames should be stable, quiet, soft, and blue (dust may cause orange tips but they must not be yellow). Flames should extend directly outward from the burners without curling, floating, or lifting off. Flames must not impinge on the sides of the heat exchanger firing tubes.

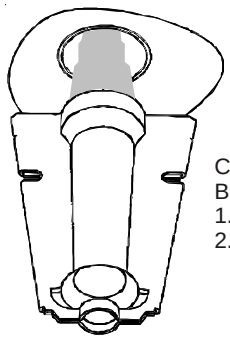

Check the
Burner Flames for:
1. Stable, soft and blue.
2. Not curling, floating or lifting off.

Burner Flame

Memory Chips

Memory chips are a service only item and are not sent out with new equipment. They are used only in the rare occurrence where communicating equipment shared data needs to be restored.

Memory chips should not be routinely installed at the time of installation. A memory chip is not required when an individual control board or motor is replaced.

A memory chip is only required when all communicating components have been replaced with service parts containing no shared data. If either an existing control board or ECM motor needed to be replaced, the service part would upload the necessary data from the remaining communicating component. In a fully communicating system, this would include the communicating thermostat and communicating outdoor unit control board as the necessary data is stored in all communicating devices.

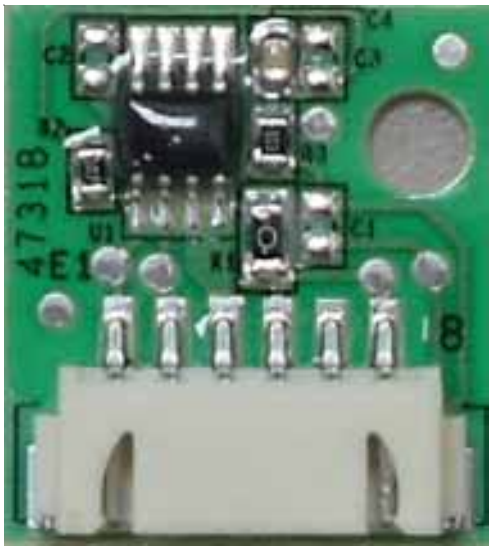

A furnace void of shared data will not function in a legacy or a fully communicating installation. The furnace display would show “d0” indicating that there is no shared data in the furnace control board. If it is ever necessary to use a memory chip, the specific memory chip for your furnace number must be used.

OPERATIONAL CHECKS

To use a memory chip;

1. Power down all HVAC equipment in the system.
2. As when handling any electronic components, discharge any static electricity you may be carrying by touching grounded metal.
3. Insert the memory card in the slot on the control board.
4. Power the system back up and allow a few minutes for the network to establish communication between all devices.
5. Furnace control board will display "OP" or 'ON" (depending on board part number).
6. Check operation.
7. Memory chip can be left on the control board (recommended) or removed once equipment is powered down again.

Safety Circuit Description

A number of safety circuits are employed to ensure safe and proper furnace operation. These circuits serve to control any potential safety hazards and serve as inputs in the monitoring and diagnosis of abnormal function. These circuits are continuously monitored during furnace operation by the integrated control module.

Integrated Furnace Control (IFC)

The integrated control module is an electronic device which, if a potential safety concern is detected, will take the necessary precautions and provide diagnostic information through an LED display.

Primary Limit

The primary limit control is located on the partition panel and monitors heat exchanger compartment temperatures. It is a normally-closed (electrically), automatic reset, temperature-activated sensor. The limit guards against overheating as a result of insufficient conditioned air passing over the heat exchanger.

Auxiliary Limit

The auxiliary limit controls are located on or near the circulator blower and monitors blower compartment temperatures. They are a normally-closed (electrically), auto-reset sensors. These limits guard against overheating as a result of insufficient conditioned air passing over the heat exchanger.

Rollout Limit

The rollout limit controls are mounted on the burner/manifold assembly and monitor the burner flame. They are normally-closed (electrically), manual-reset sensors. These limits guard against burner flames not being properly drawn into the heat exchanger.

Pressure Switches

The pressure switches are normally-open (closed during operation) negative air pressure-activated switches. They monitor the airflow (combustion air and flue products) through the heat exchanger via pressure taps located on the induced draft blower and the coil front cover. These switches guard against insufficient airflow (combustion air and flue products) through the heat exchanger and/or blocked condensate drain conditions.

Flame Sensor

The flame sensor is a probe mounted to the burner/manifold assembly which uses the principle of flame rectification to determine the presence or absence of flame.

Troubleshooting

WARNING

HIGH VOLTAGE !

TO AVOID PERSONAL INJURY OR DEATH DUE TO ELECTRICAL SHOCK, DISCONNECT ELECTRICAL POWER BEFORE PERFORMING ANY SERVICE OR MAINTENANCE.

Refer to the *Troubleshooting Codes* for assistance in determining the source of unit operational problems. The dual 7-segment LED display will display an error code that may contain a letter and number. The error code may be used to assist in troubleshooting the unit.

Resetting From Lockout

Furnace lockout results when a furnace is unable to achieve ignition after three attempts during a single call for heat. It is characterized by a non-functioning furnace and a **E0** code displayed on the dual 7-segment display. If the furnace is in "lockout", it will (or can be) reset in any of the following ways.

1. Automatic reset. The integrated control module will automatically reset itself and attempt to resume normal operations following a one hour lockout period.
2. Manual power interruption. Interrupt 115 volt power to the furnace.
3. Manual thermostat cycle. Lower the thermostat so that there is no longer a call for heat for 1 -20 seconds then reset to previous setting.

NOTE: If the condition which originally caused the lockout still exists, the control will return to lockout. Refer to the *Troubleshooting Codes* for aid in determining the cause.

MAINTENANCE

Maintenance

WARNING

TO AVOID ELECTRICAL SHOCK, INJURY OR DEATH, DISCONNECT ELECTRICAL POWER BEFORE PERFORMING ANY MAINTENANCE. IF YOU MUST HANDLE THE IGNITER, HANDLE WITH CARE. TOUCHING THE IGNITER ELEMENT WITH BARE FINGERS, ROUGH HANDLING OR VIBRATION COULD DAMAGE THE IGNITER RESULTING IN PREMATURE FAILURE. ONLY A QUALIFIED SERVICER SHOULD EVER HANDLE THE IGNITER.

ANNUAL INSPECTION

The furnace should be inspected by a qualified installer, or service agency at least once per year. This check should be performed at the beginning of the heating season. This will ensure that all furnace components are in proper working order and that the heating system functions appropriately. Pay particular attention to the following items. Repair or service as necessary.

- Flue pipe system. Check for blockage and/or leakage. Check the outside termination and the connections at and internal to the furnace.
- Heat exchanger. Check for corrosion and/or buildup within the heat exchanger passageways.
- Burners. Check for proper ignition, burner flame, and flame signal.
- Drainage system. Check for blockage and/or leakage. Check hose connections at and internal to furnace.
- Wiring. Check electrical connections for tightness and/or corrosion. Check wires for damage.
- Filters.

FILTERS

CAUTION

TO ENSURE PROPER UNIT PERFORMANCE, ADHERE TO THE FILTER SIZES GIVEN IN THE RECOMMENDED MINIMUM FILTER SIZE TABLE OR SPECIFICATION SHEET APPLICABLE TO YOUR MODEL.

FILTER MAINTENANCE

Improper filter maintenance is the most common cause of inadequate heating or cooling performance. Filters should be cleaned (permanent) or replaced (disposable) every two months or as required.

BURNERS

Visually inspect the burner flames periodically during the heating season. Turn on the furnace at the thermostat and allow several minutes for flames to stabilize, since any dislodged dust will alter the flames normal appearance. Flames should be stable, quiet, soft, and blue (dust may cause orange tips but they must not be yellow). They should extend directly outward from the burners without curling, floating, or lifting off. Flames must not impinge on the sides of the heat exchanger firing tubes.

INDUCED DRAFT AND CIRCULATOR BLOWERS

The bearings in the induced draft blower and circulator blower motors are permanently lubricated by the manufacturer. No further lubrication is required. Check openings on motor housing for accumulation of dust which may cause overheating. Clean as necessary.

CONDENSATE TRAP AND DRAIN SYSTEM (QUALIFIED SERVICER ONLY)

Annually inspect the drain tubes, drain trap, and field-supplied drain line for proper condensate drainage. Check drain system for hose connection tightness, blockage, and leaks. Clean or repair as necessary.

FLAME SENSOR (QUALIFIED SERVICER ONLY)

Under some conditions, the fuel or air supply can create a nearly invisible coating on the flame sensor. This coating acts as an insulator causing a drop in the flame sense signal. If the flame sense signal drops too low the furnace will not sense flame and will lock out. The flame sensor should be carefully cleaned by a qualified servicer using steel wool.

SERVICING

S-1 CHECKING VOLTAGE 52
S-2 CHECKING WIRING 52
S-3A THERMOSTAT AND WIRING 52
S-3B HEATING ANTICIPATOR / CYLCE RATE 53
S-4 CHECKING TRANSFORMER AND CONTROL CIRCUIT 53
S-300 CHECKING PRIMARY LIMIT CONTROL 53
S-301 CHECKING AUXILIARY LIMIT CONTROL 53
S-302 CHECKING FLAME ROLLOUT CONTROL 54
S-303 INDUCED DRAFT BLOWER MOTOR 54
S-304 CHECKING MODULATING GAS VALVE 54
S-304A CHECKING INDUCTOR COIL 54
S-305 CHECKING MAIN BURNERS 55
S-306 CHECKING ORIFICES 55
S-307 CHECKING GAS PRESSURE 55
S-308 CHECKING HOT SURFACE IGNITOR 56
S-309 CHECKING FOR FLASHBACK 56
S-310 CHECKING PRESSURE CONTROL 56
S-311 HIGH ALTITUDE APPLICATION 57
S-312 CHECKING FOR DELAYED IGNITION 57
S-313 CHECKING INTEGRATED IGNITION CONTROL BOARDS 57
S-314 CHECKING FLAME SENSOR 57

SERVICING

S-1 CHECKING VOLTAGE

WARNING

HIGH VOLTAGE
DISCONNECT ALL POWER BEFORE SERVICING OR CHANGING ANY ELECTRICAL WIRING. MULTIPLE POWER SOURCES MAY BE PRESENT. FAILURE TO DO SO MAY CAUSE PROPERTY DAMAGE, PERSONAL INJURY OR DEATH.

1. Remove the blower door to gain entry to the Junction Box.
2. Remove cover from the Junction Box and gain access to incoming power lines.

With Power ON:

WARNING

LINE VOLTAGE NOW PRESENT

3. Using a voltmeter, measure the voltage across the hot and neutral connections. Line voltage should measure 115 +/- 10%. Measure from black (hot) to ground should also read 115 volts +/- 10%. Measuring from white (neutral) to ground should read 0 volts

NOTE: To energize the furnace, the Door Interlock Switch must be engaged at this point.

4. No reading - indicates open wiring, open line voltage fuse, no power, or faulty Door Interlock Switch from unit to fused disconnect service. Repair as needed.
5. With proper voltage at line voltage connectors, energize the furnace blower motor by jumpering terminals R to G on the integrated ignition control.
6. With the blower motor in operation, the voltage should be 115 volts ± 10 percent.
7. If the reading falls below the minimum voltage, check the line wire size. Long runs of undersized wire can cause low voltage. If wire size is adequate, notify the local power company of the condition.
8. After completing check and/or repair, replace Junction Box cover and reinstall the service panel doors.
9. Turn on electrical power and verify proper unit operation.

S-2 CHECKING WIRING

WARNING

DISCONNECT ALL POWER BEFORE SERVICING.

1. Check wiring visually for signs of overheating, damaged insulation and loose connections.
2. Use an ohmmeter to check continuity of any suspected open wires.
3. If any wires must be replaced, replace with AWM, 105°C. 2/64 thick insulation of the same gauge or its equivalent.

CHECKING THERMOSTAT, WIRING AND ANTICIPATOR

S-3A THERMOSTAT AND WIRING

WARNING

DISCONNECT ALL POWER BEFORE SERVICING.

1. Remove the blower compartment door to gain access to the thermostat low voltage wires located at the furnace integrated control module terminals.
2. Remove the thermostat low voltage wires at the furnace control panel terminal board.
3. Jumper terminals R to W on the integrated ignition control.

With Power On (and Door Interlock Switch closed):

NOTE: For this test, DIP switch #13 must be in OFF position.)

WARNING

LINE VOLTAGE NOW PRESENT

4. Induced Draft Motor must run and pull in pressure switch.
5. If the hot surface ignitor heats and at the end of the ignitor warm-up period the gas valve opens and the burners ignite, the trouble is in the thermostat or wiring.
6. With power off, check the continuity of the thermostat and wiring. Repair or replace as necessary.

If checking the furnace in the air conditioning mode, proceed as follows.

7. With power off, Jumper terminals R to Y (or Y1 or Y2 for two-stage models) to G.
8. Turn on the power.
9. If the furnace blower motor starts and the condensing unit runs, then the trouble is in the thermostat or wiring. Repair or replace as necessary.
10. After completing check and/or repair of wiring and check and/or replacement of thermostat, reinstall blower compartment door.
11. Turn on electrical power and verify proper unit operation.

SERVICING

S-3B HEATING ANTICIPATOR/ CYLCE RATE

Older heating thermostats may have an adjustable anticipator. This is a wire wound adjustable heater which is energized during the "ON" cycle to help prevent overheating of the conditioned space.

The anticipator is a part of the thermostat and if it should fail for any reason, the thermostat must be replaced.

Other thermostats have a cycle rate adjustment to adjust cycles per hour. This should be set to match system type.

S-4 CHECKING TRANSFORMER AND CONTROL CIRCUIT

A step-down transformer 120 volt primary to 24 volt secondary, 40 VA (Heating and Cooling Models) supplies ample capacity of power for either operation.

WARNING

HIGH VOLTAGE
DISCONNECT ALL POWER BEFORE SERVICING OR CHANGING ANY ELECTRICAL WIRING. MULTIPLE POWER SOURCES MAY BE PRESENT. FAILURE TO DO SO MAY CAUSE PROPERTY DAMAGE, PERSONAL INJURY OR DEATH.

1. Remove blower compartment door to gain access to the thermostat low voltage wires located at the furnace integrated control module.
2. Remove the thermostat low voltage wires at the furnace integrated control module terminals.

With Power On (and Door Interlock Switch closed

WARNING

LINE VOLTAGE NOW PRESENT

3. Use a voltmeter, check voltage across terminals R and C. Must read 24 VAC.
4. No voltage indicates faulty transformer, open fuse, bad wiring, bad splice, or open door interlock switch.
5. Check transformer primary voltage at incoming line voltage connections, fuse, splices, and blower door interlock switch.
6. If line voltage is available to the primary side of transformer and not at secondary side, the transformer is inoperative. Replace.
7. After completing check and/or replacement of transformer and check and/or repair of control circuit, reinstall blower compartment door.
8. Turn on electrical power and verify proper unit operation.

S-300 CHECKING PRIMARY LIMIT CONTROL

All modulating furnaces use a nonadjustable, automatic reset, bi-metal type limit control. The primary limit control is located on the front panel of the furnace between heat exchanger tubes. This is a normally closed control.

WARNING

HIGH VOLTAGE
DISCONNECT ALL POWER BEFORE SERVICING OR CHANGING ANY ELECTRICAL WIRING. MULTIPLE POWER SOURCES MAY BE PRESENT. FAILURE TO DO SO MAY CAUSE PROPERTY DAMAGE, PERSONAL INJURY OR DEATH.

1. Turn off all voltage sources
2. Remove the two wires from the limit switch
3. Using an ohmmeter, check for a closed circuit across the two limit contacts (this will be the same reading that you see by touching your two meter leads together)

S-301 CHECKING AUXILIARY LIMIT CONTROL

Automatic Reset Auxiliary Limit Located in Blower Housing

Modulating furnaces use an auxiliary limit(s) (automatic reset) control connected in series with the main limit switch. If its temperature should be exceeded, it will open, interrupting the voltage in the limit circuit. The auxiliary limit is located on the side of the blower housing. This is a normally closed switch. To check auxiliary limits; perform the following steps.

WARNING

HIGH VOLTAGE
DISCONNECT ALL POWER BEFORE SERVICING OR CHANGING ANY ELECTRICAL WIRING. MULTIPLE POWER SOURCES MAY BE PRESENT. FAILURE TO DO SO MAY CAUSE PROPERTY DAMAGE, PERSONAL INJURY OR DEATH.

1. Turn off all power sources
2. Remove the two wires from the auxiliary limit switch
3. Using an ohmmeter, check for a closed circuit across the two limit contacts (this will be the same reading that you see by touching your two meter leads together)

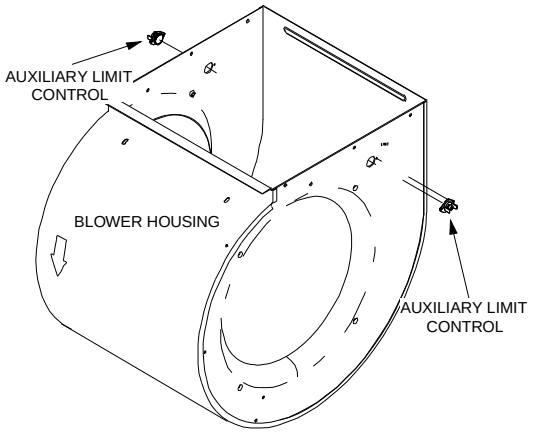

Auxiliary Limit Control Location

S-302 CHECKING FLAME ROLLOUT CONTROL

A temperature activated manual reset control is mounted to the manifold assembly on modulating furnace, as shown in the following illustration.

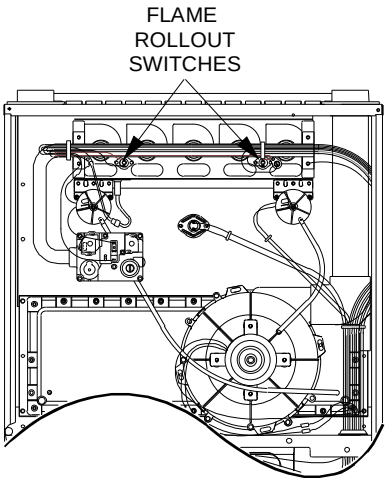

Flame Rollout Switch Location

(90% Upflow Furnace Shown, Counterflow Similar)

WARNING

HIGH VOLTAGE

DISCONNECT ALL POWER BEFORE SERVICING OR CHANGING ANY ELECTRICAL WIRING. MULTIPLE POWER SOURCES MAY BE PRESENT. FAILURE TO DO SO MAY CAUSE PROPERTY DAMAGE, PERSONAL INJURY OR DEATH.

1. Turn off all power sources
2. Remove the two wires from the roll out switch
3. Using an ohmmeter, check for a closed circuit across the two roll out switch contacts (this will be the same reading that you see by touching your two meter leads together).

S-303 INDUCED DRAFT BLOWER MOTOR

Induced Draft Blower (IDB)

All modulating furnace models use a three phase induced draft blower to draw flue gases through the heat exchanger. The inducer uses ball bearings and is permanently lubricated. This motor is driven at varying speeds by the VFD (variable frequency drive) section of the IFC. The IFC takes typical single phase power supplied to the furnace and converts it to a three phase supply to operate the draft inducer at the desired speed. The windings of the induced draft motor will have equal resistance +/- 5%. Normal resistance readings at room temperature will range from 14-17 ohms. The voltage supplied by the IFC to drive the induced draft blower will vary from 15-110 volts A/C between any two windings. This would be read between any two of the three power wires between the IFC and the induced draft blower. This voltage to the IBD will vary between furnace models and is dependant on what percentage of maximum fire is being called for. The power wires are colored red, white and black. A green colored ground wire is also present.

S-304 CHECKING MODULATING GAS VALVE

Gas ValveModulating furnaces use a 24 VAC pneumatically operatedgas valve by Honeywell. The valve is energized by the inte-grated furnace control on a call for heat, wired in series through the front-cover pressure switch. The firing rate percentage is determined by the negative pressure created by the operation of the draft inducer. The gas valve is factory set and non-adjustable in the field. Do not remove the seal covering the regulator screws or attempt to adjust either of the regulator screws. Even though the modulating gas valve is non-adjustable in the field, gas industry procedure dictates that the installing / servicing technician should know that the appliance is operating as designed before leaving newly installed or serviced equipment. The gas valve is equipped with 1/8 NPT fittings to access both the inlet and manifold gas pressures. To do a manifold gas pressure check, the furnace can be operated in field test mode. This mode will quickly bring the furnace up to high fire. To enter field test mode; during a call for heat, press the fault recall button twice within a five second period; when the dual seven segment displays show Ft, press the fault recall button again to enter field test mode.The furnace will stay in field test for five minutes or until the call for heat is satisfied. Gas valve orientation must be such that the switch is facing out towards the front of the furnace.

S-304A CHECKING INDUCTOR COIL

Wired in series with ¾ and 1 HP ECM motors; the inductor coil conditions the power supply to the motor, smoothing out spikes and electrical noise. With voltage applied to one side of the inductor coil, the output voltage to the motor should be the same as incoming voltage.

SERVICING

S-305 CHECKING MAIN BURNERS

The main burners are used to provide complete combustion of various fuels in a limited space, and transfer this heat of the burning process to the heat exchanger.

Proper ignition, combustion, and extinction are primarily due to burner design, orifice sizing, gas pressure, primary and secondary air, vent and proper seating of burners.

Depending on the size of the furnace, each furnace will havefrom three to five inshot burners. Burners are precisely constructed of aluminized steel and designed to provide proper ignition and flame stability. When converting a modulating furnace to L.P. gas, the factory installed burners must be replaced by burners that come in the L.P. kit.

WARNING

DISCONNECT ALL GAS AND ELECTRICAL POWER SUPPLY.

In checking main burners, look for signs of rust, oversized and undersized carry over ports restricted with foreign material, etc, refer to Beckett Burner drawing.

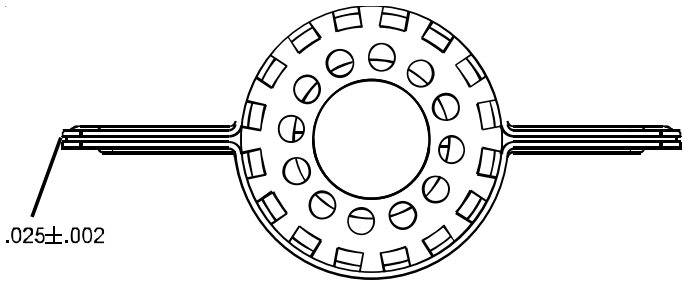

Beckett Burner

S-306 CHECKING ORIFICES

A fixed gas orifice is used in all Daikin furnaces. That is an orifice which has a fixed bore and position as shown in the following drawing.

No resizing should be attempted until all factors are taken into consideration such as inlet and manifold gas pressure, alignment, and positioning, specific gravity and BTU content of the gas being consumed.

Orifices should be treated with care in order to prevent damage. They should be removed and installed with a boxend wrench in order to prevent distortion. In no instance should an orifice be peened over and redrilled.

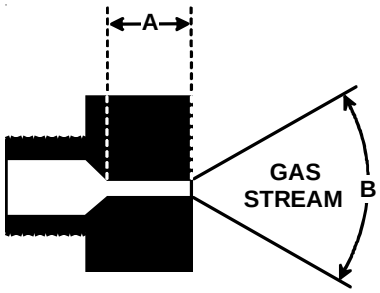

The length of Dimension "A" determines the angle of Gas Stream "B".

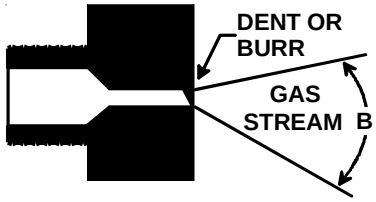

A dent or burr will cause a severe deflection of the gas stream.

S-307 CHECKING GAS PRESSURE

Gas Supply Pressure Measurement

CAUTION

TO PREVENT UNRELIABLE OPERATION OR EQUIPMENT DAMAGE, THE INLET GAS SUPPLY PRESSURE MUST BE AS SPECIFIED ON THE UNIT RATING PLATE WITH ALL OTHER HOUSEHOLD GAS FIRED APPLIANCES OPERATING.

Gas inlet and manifold pressures should be checked in accordance to the type of fuel being consumed.

The line pressure supplied to the gas valve must be within the range specified below. The supply pressure can be measured at the gas valve inlet pressure tap or at a hose fitting installed in the gas piping drip leg. The supply pressure must be measured with the burners operating. To measure the gas supply pressure, use the following procedure.

WARNING

DISCONNECT ELECTRICAL POWER AND SHUT OFF GAS SUPPLY.

1. After turning off gas to furnace at the manual gas shutoff valve external to the furnace, remove burner compartment door to gain access to the gas valve.
2. Connect a calibrated water manometer (or appropriate gas pressure gauge) at either the gas valve inlet pressure tap or the gas piping drip leg as shown in the following figures.

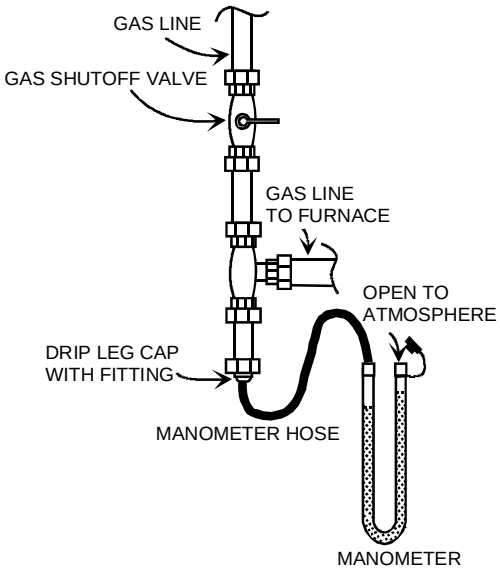

Measuring Inlet Gas Pressure (Alternate Method)

3. Turn ON the gas and electrical power supply and operate the furnace and all other gas consuming appliances on the same gas supply line.
4. Measure furnace gas supply pressure with burners firing. Supply pressure must be within the range specified in the following table.

To test manifold pressure the furnace must be put into "field test mode" to bring the furnace up to 100% input.

5. Disconnect manometer after turning off gas at manual shutoff valve. Reinstall plug before turning on gas to furnace.
6. Turn OFF any unnecessary gas appliances started in step 3.
7. Turn on gas to furnace and check for leaks. If leaks are found, repair and then reinstall burner compartment door.
8. Turn on electrical power and verify proper unit operation.

The gas valve is factory set and ***non-adjustable*** in the field. Do not remove the seal covering the regulator screws or attempt to adjust either of the regulator screws. Even though the modulating gas valve is non-adjustable in the field, gas industry procedure dictates that the installing / servicing technician should know that the appliance is operating as designed before leaving newly installed or serviced equipment. The gas valve is equipped with 1/8 NPT fittings to access both the inlet and manifold gas pressures. To do a manifold gas pressure check the furnace can be operated in ***field test mode.*** This mode will quickly bring the furnace up to high fire. To enter field test mode; during a call for heat, press the fault recall button twice within a five second period; when the dual seven segment displays show Ft, press the fault recall button again to enter field test mode. The furnace will stay in field test for five minutes or until the call for heat is satisfied. Gas valve orientation must be such that the switch is facing out towards the front of the furnace. Manifold pressure for natural gas is pre-set to be between 3.2" WC to 3.8"WC. If the furnace has been converted to LP gas, the manifold pressure will be 9.7"WC to 10.3"W.

Manifold Gas Pressure	
Natural Gas	3.5" w.c.
Propane Gas	10.0" w.c.

S-308 CHECKING HOT SURFACE IGNITOR

Modulating furnaces use a 115 volt silicon nitride hot surface igniter. This is the familiar and reliable 0131F00008S igniter with 17 second warm up time. At room temperature the igniter has a resistance range of 37 - 68 ohms. The H.S.I. isconnected electrically to the IFC by a 3/16" push-on connection.

S-309 CHECKING FOR FLASHBACK

Flashback will also cause burning in the burner venturi, but is caused by the burning speed being greater than the gas-air flow velocity coming from a burner port.

Flashback may occur at the moment of ignition, after a burner heats up or when the burner turns off. The latter is known as extinction pop.

Since the end results of flashback and delayed ignition can be the same (burning in the burner venturi) a definite attempt should be made to determine which has occurred. If flashback should occur, check for the following:

1. Improper gas pressure - adjust to proper pressure (See *S-307 CHECKING GAS PRESSURE*)..
2. Check burner for proper alignment and/or replace burner.
3. Improper orifice size - check orifice for obstruction.

S-310 CHECKING PRESSURE CONTROL

The pressure control is a safety device to prevent the combustion cycle from occurring with inadequate venting caused by a restricted or blocked vent pipe on the modulating furnace. Also on the modulating furnaces there is a pressure control that will prevent the combustion cycle from occurring with inadequate condensate drainage due to a partial or blocked recuperator coil or drain.

WARNING

HIGH VOLTAGE

DISCONNECT ALL POWER BEFORE SERVICING OR INSTALLING THIS UNIT. MULTIPLE POWER SOURCES MAY BE PRESENT. FAILURE TO DO SO MAY CAUSE PROPERTY DAMAGE, PERSONAL INJURY OR DEATH.

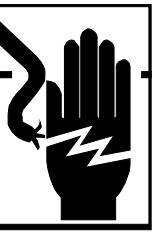

1. Remove burner compartment door to gain access to pressure switch(es).
2. Remove wires from the pressure switch(es) electrical terminals.

3. Using a VOM check from common terminal to NO (Normally Open) - should read open.

If switch reads as above proceed to Step 4, otherwise replace control.

4. Remove the pressure control hose from the control and interconnect with an inclined manometer as shown in the following figure.

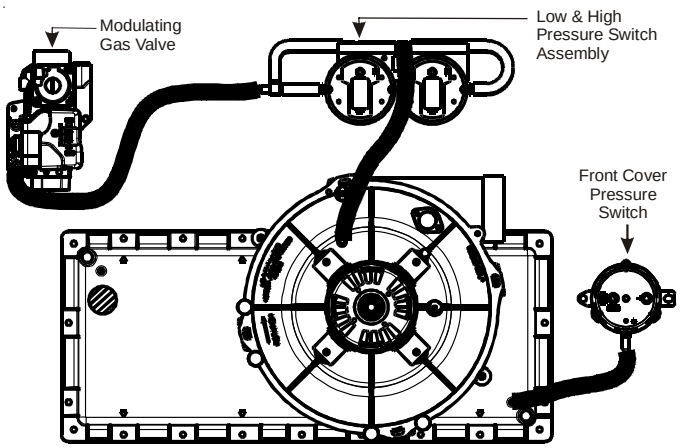

Modulating Furnace Pneumatic Tubing Diagram

Upflow Model Shown

For representation only. Actual unit may vary in appearance.

S-311 HIGH ALTITUDE APPLICATION

Modulating furnaces are approved up to 10,000 ft altitude. No kit or changes are needed.

S-312 CHECKING FOR DELAYED IGNITION

Delayed ignition is a delay in lighting a combustible mixture of gas and air which has accumulated in the combustion chamber.

When the mixture does ignite, it may explode and/or rollout causing burning in the burner venturi.

If delayed ignition should occur, the following should be checked:

1. Improper gas pressure - adjust to proper pressure (See *S-307 CHECKING GAS PRESSURE*).
2. Improper burner positioning - burners should be in locating slots, level front to rear and left to right.
3. Carry over (lighter tube or cross lighter) obstructed - clean.
4. Main burner orifice(s) deformed, or out of alignment to burner - replace.

S-313 CHECKING INTEGRATED IGNITION CONTROL BOARDS

NOTE: Failure to earth ground the furnace, reversing the neutral and hot wire connection to the line (polarity), or a high resistance connection in the neutral line may cause the control to lockout due to failure to sense flame.

⚠ WARNING

TO AVOID THE RISK OF ELECTRICAL SHOCK, WIRING TO THE UNIT MUST BE PROPERLY POLARIZED AND GROUNDED. DISCONNECT POWER BEFORE PERFORMING SERVICE LISTED BELOW.

The ground wire must run from the furnace all the way back to the electrical panel. Proper grounding can be confirmed by disconnecting the electrical power and measuring resistance between the neutral (white) connection and the burner closest to the flame sensor. Resistance should be less than 10 ohms.

The ignition control is a combination electronic and electromechanical device and is not field repairable. Complete unit must be replaced.

⚠ WARNING

LINE VOLTAGE NOW PRESENT

These tests must be completed within a given time frame due to the operation of the ignition control.

The ignition control is capable of diagnosing many furnace failures to help in troubleshooting. The controls utilize a dual, 7-segment LED display to indicate diagnostic codes.

When the control is powered up normally the light will be on continuously. The contol display will indicate **"ON"** when powered and in standby mode.

This can be used to test for 120 volts and 24 volts to the control since both must be present for the light to be on. If this step fails, check for 120 volts to the control and check the transformer and its associated wiring. If this step is successful give the control a call for heat and wait five (5) seconds or until the furnace goes into lockout. If the control detects a failure it will now be shown on the diagnostic indicator light/display. Refer to the *Abnormal Operation* section in the *Sequence of Operation* section of this manual for more detail on failure codes

The indicator light/display may be viewed by looking through the sight glass in the blower compartment door. The failure codes are retrieved via an on-board, momentary push button switch. Pressing the button for 2-5 seconds will force the failure codes to be displayed on the diagnostic indicator.

S-314 CHECKING FLAME SENSOR

A flame sensing device is used in conjunction with the ignition control module to prove combustion. If proof of flame is not present the control will de-energize the gas valve and "retry" for ignition or lockout.

SERVICING

WARNING

HIGH VOLTAGE

DISCONNECT ALL POWER BEFORE SERVICING OR INSTALLING THIS UNIT. MULTIPLE POWER SOURCES MAY BE PRESENT. FAILURE TO DO SO MAY CAUSE PROPERTY DAMAGE, PERSONAL INJURY OR DEATH.

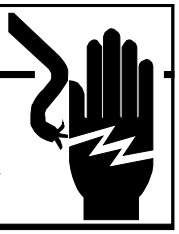

Flame signal is continuously monitored by the IFC. The flame rod, flame rod wire, and proper grounding are all critical to proving the presence of flame. Because of the design of the Honeywell flame proving system, reading flame signal with a microamp meter will not provide reliable and consistent results and is therefore not a recommended practice. The IFC has a built in warning (E6) if flame signal is approaching the low threshold.

NOTE: Contaminated fuel or combustion air can create a nearly invisible coating on the flame sensor. This coating works as an insulator causing a loss in the flame sense signal. If this situation occurs the flame sensor must be cleaned with steel wool.

Symptoms of Abnormal Operation (Non-communicating & ComfortNet™ Thermostat)	Diagnostic/Status LED Codes	Fault Description	ComfortNet Thermostat Only Message	ComfortNet Thermostat Only Code	Possible Causes	Corrective Actions	Notes & Cautions
• Furnace fails to operate • Integrated control module LED display provides IF error code.. • ComfortNet thermostat "Call for Service" icon illuminated • ComfortNet thermostat scrolls "Check Furnace" message	IF	• Integrated control module has an internal fault	*INTERNAL FAULT*	*EE*	• Improper wiring to the furnace or integrated control module.	• Assure proper wiring to furnace and integrated control module. • Verify power to the furnace and integrated control module is stable and within specifications. • Replace bad integrated control module.	• Turn power OFF prior to repair. • Read precautions in "Electrostatic Discharge" section of manual. • Replace integrated control module with current replacement parts.
• LED display indicates On	On	• Normal operation	None	None	• Normal operation	• None	• Normal operation
• Furnace fails to operate • Integrated control module LED display provides E0 error code. • ComfortNet thermostat "Call for Service" icon illuminated. • ComfortNet thermostat scrolls "Check Furnace" message.	E0	• Furnace lockout due to an excessive number of ignition "retries" or flame "recycles" (3 total).	*LOCKOUT*	*E0*	• Failure to establish flame. Cause may be no gas to burners, front cover pressure switch stuck open, bad igniter or igniter alignment, improper orifices, or coated/oxidized or improperly connected flame sensor. • Loss of flame after establishment. Cause may be interrupted gas supply, lazy burner flames (improper gas pressure or restriction in flue and/or combustion air piping), front cover pressure switch opening, or improper induced draft blower performance.	• Locate and correct gas interruption. • Check front cover pressure switch operation (hose, wiring, contact operation). Correct if necessary. Make sure furnace is draining properly. • Replace or realign igniter. • Check flame sense signal. Sand sensor if coated and/or oxidized. • Check flue piping for blockage, proper length, elbows, and termination. • Verify proper induced draft blower performance.	• Turn power OFF prior to repair. • Igniter is fragile, handle with care. • Clean flame rod with steel wool. • See "Vent/Flue Pipe" section for piping details.
• Furnace fails to operate. • Integrated control module LED display provides E1 error code. • ComfortNet thermostat "Call for Service" icon illuminated. • ComfortNet thermostat scrolls "Check Furnace" message.	E1	• Low stage pressure switch circuit is closed at start of heating cycle.	*PS1 CLOSED*	*E1*	• Low stage pressure switch contacts sticking. • Shorts in pressure switch circuit wiring.	• Replace low stage pressure switch. • Repair short in wiring.	• Turn power OFF prior to repair. • Replace pressure switch with correct replacement part.
• Induced draft blower runs continuously with no further furnace operation. • Integrated control module LED display provides E2 error code. • ComfortNet thermostat "Call for Service" icon illuminated. • ComfortNet thermostat scrolls "Check Furnace" message.	E2	• Low stage pressure switch circuit is not closed.	*PS1 OPEN*	*E2*	• Pressure switch hose blocked pinched, or connected improperly. • Blocked flue and/or inlet air pipe, blocked drain system or weak induced draft blower. • Incorrect pressure switch set point or malfunctioning switch contacts. • Loose or improperly connected wiring. • Inducer not running. • H fitting atmospheric port blocked.	• Inspect pressure switch hose. Repair/replace if necessary. • Inspect flue and/or inlet air piping for blockage, proper length, elbows, and termination. • Check drain system. Correct as necessary. • Check induced draft blower performance. Correct as necessary. • Correct pressure switch set point or contact motion. • Tighten or correct wiring connection. • Clean H fitting.	• Turn power OFF prior to repair. • Replace pressure switch with correct replacement part. • Replace induced draft blower with correct replacement part. • Take care to assemble/install H fitting in factory configuration.

Troubleshooting

Symptoms of Abnormal Operation (Non-communicating & ComfortNet™ Thermostat)	Diagnostic/Status LED Codes	Fault Description	ComfortNet Thermostat Only		Possible Causes	Corrective Actions	Notes & Cautions
			Message	Code			
• Circulator blower runs continuously. No furnace operation. • Integrated control module LED display provides E3 error code. • ComfortNet thermostat "Call for Service" icon illuminated. • ComfortNet thermostat scrolls "Check Furnace" message.	E3	• Primary limit.	*HIGH LIMIT OPEN*	*E3*	• Insufficient conditioned air over the heat exchanger. Blocked filters, restrictive ductwork, improper circulator blower speed, or failed circulator blower motor. • Loose or improperly connected wiring.	• Check filters and ductwork for blockage. Clean filters or remove obstruction. • Check circulator blower speed and performance. Correct speed or replace blower motor if necessary. • Tighten or correct wiring connection.	• Turn power OFF prior to repair. • See Specification Sheet applicable to your model for allowable rise range and proper circulator speed.
• Induced draft blower and circulator blower runs continuously. No furnace operation. • Integrated control module LED display provides E4 error code. • ComfortNet thermostat "Call for Service" icon illuminated. • ComfortNet thermostat scrolls "Check Furnace" message.	E4	• Flame sensed when it should not be present.	*IMPROPER FLAME*	*E4*	• Short to ground in flame sense circuit. • Lingering burner flame. • Slow closing gas valve.	• Correct short at flame sensor or in flame sensor wiring. • Check for lingering flame. • Verify proper operation of gas valve. Replace if necessary.	• Turn power OFF prior to repair.
• Furnace fails to operate • Integrated control module LED display provides EC error code. • ComfortNet thermostat "Call for Service" icon illuminated. • ComfortNet thermostat scrolls "Check Furnace" message.	EC	• Inducer motor overcurrent fault.	*INDUCER FAULT OR INDUCER LOCKOUT*	*EC*	• Lingering Inducer motor overcurrent detected.	• Reset system power and verify inducer is running properly. • Replace inducer or integrated control module, if necessary.	
• No furnace operation. • Integrated control module LED display provides Ed error code.	Ed	• Manual reset rollout switch is open	*ROLLOUT OPEN*	*Ed*	• Orifice plate out of position. • Blocked heat exchanger. • Burners out of alignment. • Defective heat exchanger.	• Line up orifice plate. • Remove Blockage from heat exchanger. • Line up burners. • Check for flame disturbance on roll out when blower comes on.	• Turn power OFF prior to repair.
• No furnace operation. • Integrated control module LED display provides Ef error code.	EF	• Open auxiliary input.	*AUXILIARY OPEN*	*EF*	• Open circuit between aux in or aux out. • Missing jumper. • Open float switch..	• Install jumper. • Inspect float switch.	• Turn power OFF prior to repair.
• No furnace operation. • Integrated control module LED display provides E5 error code. • ComfortNet thermostat displays "Battery Power".	E5	• Open Fuse	Not Displayed	Not Displayed	• Short in low voltage wiring	• Locate and correct short in low voltage wiring	• Turn power OFF prior to repair. • Replace fuse with 3-amp automotive type
• Normal furnace operation. • Integrated control module LED display provides E6 error code.	E6	• Flame sense micro amp signal is low	*WEAK FLAME*	*E6*	• Flame sensor is coated/oxidized. • Flame sensor incorrectly .positioned in burner flame. • Lazy burner flame due to improper gas pressure or combustion air.	• Clean flame sensor if coated/oxidized. • Inspect for proper sensor alignment. • Check inlet air piping for blockage, proper length, elbows, and termination. • Compare current gas pressure to rating plate. Adjust as needed.	• Turn power OFF prior to repair. • Clean flame sensor with steel wool. • See "Vent/Flue Pipe" section for piping details. • See rating plate for proper gas pressure.

Symptoms of Abnormal Operation (Non-communicating & ComfortNet™ Thermostat)	Diagnostic/Status LED Codes	Fault Description	ComfortNet Thermostat Only		Possible Causes	Corrective Actions	Notes & Cautions
			Message	Code			
• Furnace fails to operate on high stage; furnace operates normally on low stage. • Integrated control module LED display provides E8 error code.	E8	• High stage pressure switch circuit is closed at start of heating cycle. • Induced draft blower is operating. • Furnace is operating on low stage only	*PS2 CLOSED*	*E8*	• High stage pressure switch contacts sticking. • Shorts in pressure switch circuit wiring.	• Replace high stage pressure switch. • Repair short in wiring	• Turn power OFF prior to repair. • Replace pressure switch with correct replacement part.
• Furnace fails to operate on high stage; furnace operates normally on low stage. • Integrated control module LED display provides E9 error code.	E9	• High stage pressure switch circuit is not closed. • Induced draft blower is operating. • Furnace is operating on low stage only	*PS2 OPEN*	*E9*	• Pressure switch hose blocked pinched, or connected improperly. • Blocked flue and/or inlet air pipe, blocked drain system or weak induced draft blower. • Incorrect pressure switch set point or malfunctioning switch contacts. • Loose or improperly connected wiring.	• Inspect pressure switch hose. Repair/replace if necessary. • Inspect flue and/or inlet air piping for blockage, proper length, elbows, and termination. Check drain system. Correct as necessary. • Check induced draft blower performance. Correct as necessary. • Correct pressure switch set point or contact motion. • Tighten or correct wiring connection.	• Turn power OFF prior to repair. • Replace pressure switch with correct replacement part. • Replace induced draft blower with correct replacement part.
• Furnace fails to operate. • Integrated control module LED display provides EA error code. • ComfortNet thermostat "Call for Service" icon illuminated. • ComfortNet thermostat scrolls "Check Furnace" message.	EA	• Polarity of 115 volt AC is reversed	*REVERSED PLTY*	*EA*	• Polarity of 115 volt AC power to furnace or integrated module is reversed. • Reversed unit ground.	• Review wiring diagram to correct polarity. • Verify proper ground. Correct if necessary. • Check and correct wiring.	• Turn power OFF prior to repair.
• Furnace fails to operate. • Integrated control module LED display provides d0 error code. • ComfortNet thermostat "Call for Service" icon illuminated. • ComfortNet thermostat scrolls "Check Furnace" message.	d0	• Data not yet on network.	*NO NET DATA*	*d0*	• Furnace does not contain any shared data.	• Populate shared data set using memory card.	• Turn power OFF prior to repair • Use memory card for the specific model. • Insert memory card BEFORE turning power ON. Memory card may be removed after data is loaded. • Turn power OFF before removing memory card. • Error code will be cleared once data is loaded.

Symptoms of Abnormal Operation (Non-communicating & ComfortNet™ Thermostat)	Diagnostic/Status LED Codes	Fault Description	ComfortNetThermostat Only Message	ComfortNetThermostat Only Code	Possible Causes	Corrective Actions	Notes & Cautions
• Operation different than expected or no operation. • Integrated control module LED display provides d4 error code. • ComfortNet thermostat "Call for Service" icon illuminated. • ComfortNet thermostat scrolls "Check Furnace" message.	d4	• Invalid memory card data.	*INVALID MC DATA*	*d4*	• Shared data set on memory card has been rejected by integrated control module	• Verify shared data set is correct for the specific model. Re-populate data using correct memory card if required.	• Turn power OFF prior to repair • Use memory card for the specific model. • Insert memory card BEFORE turning power ON. Memory card may be removed after data is loaded. • Turn power OFF before removing memory card. • Error code will be cleared once data is loaded.
• Furnace fails to operate. • Integrated control module LED display provides b0 error code. • ComfortNet thermostat "Call for Service" icon illuminated. • ComfortNet thermostat scrolls "Check Furnace" message.	b0	• Circulator blower motor is not running when it should be running.	*MOTOR NOT RUN*	*b0*	• Loose wiring connection at circulator motor power leads or circulator motor power leads disconnected. • Open circuit in inductor or loose wiring connection at inductor (3/4 Hp and 1 Hp models only). • Failed circulator blower motor.	• Tighten or correct wiring connection. • Verify continuous circuit through inductor. Replace if open or short circuit. • Check circulator blower motor. Replace if necessary.	• Turn power OFF prior to repair • Replace inductor with correct replacement part. • Replace circulator motor with correct replacement part.
• Furnace fails to operate. • Integrated control module LED display provides b1 error code. • ComfortNet thermostat "Call for Service" icon illuminated. • ComfortNet thermostat scrolls "Check Furnace" message.	b1	• Integrated control module has lost communications with circulator blower motor.	*MOTOR COMM*	*b1*	• Loose wiring connection at circulator motor control leads. • Failed circulator blower motor. • Failed integrated control module.	• Tighten or correct wiring connection. • Check blower motor with UTT-01 Emerson tester • Check integrated control module. Replace if necessary.	• Turn power OFF prior to repair • Replace circulator motor with correct replacement part. • Replace integrated control module with correct replacement part.
• Furnace fails to operate. • Integrated control module LED display provides b2 error code. • ComfortNet thermostat "Call for Service" icon illuminated. • ComfortNet thermostat scrolls "Check Furnace" message.	b2	• Circulator blower motor horse power in shared data set does not match circulator blower motor horse power.	*MOTOR MISMATCH*	*b2*	• Incorrect circulator blower motor in furnace. • Incorrect shared data set in integrated control module.	• Verify circulator blower motor horse power is the same specified for the specific furnace model. Replace if necessary. • Verify shared data set is correct for the specific model. Re-populate data using correct memory card if required.	• Turn power OFF prior to repair • Replace motor with correct replacement part. • Use memory card for the specific model • Insert memory card BEFORE turning power ON. Memory card may be removed after data is loaded. • Turn power OFF before removing memory card. • Error code will be cleared once shared data and motor horse power match.
• Furnace operates at reduced performance. • Airflow delivered is less than expected. • Integrated control module LED display provides b3 error code.	b3	• Circulator blower motor is operating in a power, temperature, or speed limiting condition.	*MOTOR LIMITS*	*b3*	• Blocked filters. • Restrictive ductwork. • Undersized ductwork. • High ambient temperatures.	• Check filters for blockage. Clean filters or remove obstruction. • Check ductwork for blockage. Remove obstruction. Verify all registers are fully open. • Verify ductwork is appropriately sized for system. Resize/replace ductwork if necessary. • See *"Product Description" and "Location Requirements & Considerations"* for furnace installation requirements.	• Turn power OFF prior to repair.

Symptoms of Abnormal Operation (Non-communicating & ComfortNet™ Thermostat)	Diagnostic/Status LED Codes	Fault Description	ComfortNet Thermostat Only		Possible Causes	Corrective Actions	Notes & Cautions
			Message	Code			
• Furnace fails to operate. • Integrated control module LED display provides b4 error code. • ComfortNet thermostat "Call for Service" icon illuminated. • ComfortNet thermostat scrolls "Check Furnace" message.	b4	• Circulator blower motor senses a loss of rotor control. • Circulator blower motor senses high current.	*MOTOR TRIPS*	*b4*	• Abnormal motor loading, sudden change in speed or torque, sudden blockage of furnace air inlet or outlet. • High loading conditions, blocked filters, very restrictive ductwork, blockage of furnace air inlet or outlet.	• Check filters, filter grills/registers, duct system, and furnace air inlet/outlet for blockages.	• Turn power OFF prior to repair.
• Furnace fails to operate. • Integrated control module LED display provides b5 error code. • ComfortNet thermostat "Call for Service" icon illuminated. • ComfortNet thermostat scrolls "Check Furnace" message.	b5	• Circulator blower motor fails to start 10 consecutive times.	*MTR LCKD ROTOR*	*b5*	• Obstruction in circulator blower housing. • Seized circulator blower motor bearings. • Failed circulator blower motor.	• Check circulator blower for obstructions. Remove and repair/replace wheel/motor if necessary. • Check circulator blower motor shaft rotation and motor. Replace motor if necessary.	• Turn power OFF prior to repair • Replace motor with correct replacement part. • Replace wheel with correct replacement part.
• Furnace fails to operate. • Integrated control module LED display provides b6 error code. • ComfortNet thermostat "Call for Service" icon illuminated. • ComfortNet thermostat scrolls "Check Furnace" message.	b6	• Circulator blower motor shuts down for over or under voltage condition. • Circulator blower motor shuts down due to over temperature condition on power module.	*MOTOR VOLTS*	*b6*	• High AC line voltage to furnace. • Low AC line voltage to furnace. • High ambient temperatures.	• Check power to furnace. Verify line voltage to furnace is within the range specified on the furnace rating plate. • See *"Product Description"* and *"Location Requirements & Considerations"* for furnace installation requirements.	• Turn power OFF prior to repair.
• Furnace fails to operate. • Integrated control module LED display provides b7 error code. • ComfortNet thermostat "Call for Service" icon illuminated. • ComfortNet thermostat scrolls "Check Furnace" message.	b7	• Circulator blower motor does not have enough information to operate properly. • Motor fails to start 40 consecutive times.	*MOTOR PARAMS*	*b7*	• Error with integrated control module. • Motor has a locked rotor condition.	• Check integrated control module. Verify control is populated with correct shared data set. See data errors above for details. • Check for locked rotor condition (see error code above for details).	• Turn power OFF prior to repair. • Replace with correct replacement part(s). • Use memory card for the specific model.
• Furnace operates at reduced performance. • Integrated control module LED display provides b9 error code.	b9	• Airflow is lower than demanded.	*LOW ID AIRFLOW*	*b9*	• Blocked filters. • Restrictive ductwork. • Undersized ductwork.	• Check filters for blockage. Clean filters or remove obstruction. • Check ductwork for blockage. Remove obstruction. Verify all registers are fully open. • Verify ductwork is appropriately sized for system. Resize/replace ductwork if necessary.	• Turn power OFF prior to repair.

Status Codes

	NO POWER
On	NORMAL OPERATION
A	INDICATES AIRFLOW, FOLLOWED BY CFM
b0	BLOWER MOTOR NOT RUNNING
b1	BLOWER COMMUNICATION ERROR
b2	BLOWER HP MIS-MATCH
b3	BLOWER MOTOR OPERATING IN POWER, TEMPERATURE, OR SPEED LIMIT
b4	BLOWER MOTOR CURRENT TRIP OR LOST ROTOR
b5	BLOWER MOTOR LOCKED ROTOR
b6	BLOWER OVER/UNDER VOLTAGE TRIP OR OVER TEMPERATURE TRIP
b7	INCOMPLETE PARAMETERS SENT TO MOTOR
b9	LOW INDOOR AIRFLOW
C	CLIMATETALK COMPRESSOR COOLING / CONVENTIONAL COMPRESSOR COOLING WHEN 1-STAGE COMPRESSOR IS SET UP
C1	LOW STAGE COOL
C2	HIGH STAGE COOL
d	CLIMATETALK COMPRESSOR COOLING WITH DEHUMIFICATION / CONVENTIONAL COMPRESSOR COOLING WITH DEHUMIDIFICATION WHEN 1-STAGE COMPRESSOR IS SET UP
d0	DATA NOT YET ON NETWORK
d1	CONVENTIONAL 1-STAGE COMPRESSOR COOLING WITH DEHUMIDIFICATION WHEN 2-STAGE COMPRESSOR IS SET UP
d2	CONVENTIONAL 2-STAGE COMPRESSOR COOLING WITH DEHUMIDIFICATION WHEN 2-STAGE COMPRESSOR IS SET UP
d4	INVALID MEMORY CARD DATA
dF	DEFROST DEMAND
E0	LOCKOUT DUE TO EXCESSIVE RETRIES OR RECYCLES
E1	LOW STAGE PRESSURE SWITCH STUCK CLOSED AT START OF HEATING CYCLE
E2	LOW STAGE PRESSURE SWITCH STUCK OPEN
E3	OPEN HIGH LIMIT SWITCH
E4	FLAME DETECTED WHEN NO FLAME SHOULD BE PRESENT
E5	OPEN FUSE
E6	LOW FLAME SIGNAL
E7	IGNITER FAULT OR IMPROPER GROUNDING
E8	HIGH STAGE PRESSURE SWITCH STUCK CLOSED AT START OF HEATING CYCLE
E9	HIGH STAGE PRESSURE SWITCH STUCK OPEN
EA	REVERSED 115 VAC POLARITY
EC	INDUCER MOTOR OVERCURRENT FAULT
Ed	ROLLOUT SWITCH OPEN
EF	AUXILIARY INPUT OPEN
F	CONTINUOUS FAN
Ft	FIELD TEST MODE
H	INDICATES GAS HEAT, FOLLOWED BY PERCENTAGE OF DEMAND
HI	HIGH HEAT = 100%
IF	INTERNAL FAULT
P	CLIMATETALK COMPRESSOR HEATING / CONVENTIONAL COMPRESSOR HEATING WHEN 1-STAGE COMPRESSOR IS SET UP
P1	CONVENTIONAL 1-STAGE COMPRESSOR HEATING WHEN 2-STAGE COMPESSOR IS SET UP
P2	CONVENTIONAL 2-STAGE COMPRESSOR HEATING WHEN 2-STAGE COMPESSOR IS SET UP
50	% OF HIGH HEAT

WARNING

HIGH VOLTAGE!
Disconnect ALL power before servicing or installing this unit. Multiple power sources may be present. Failure to do so may cause property damage, personal injury or death.

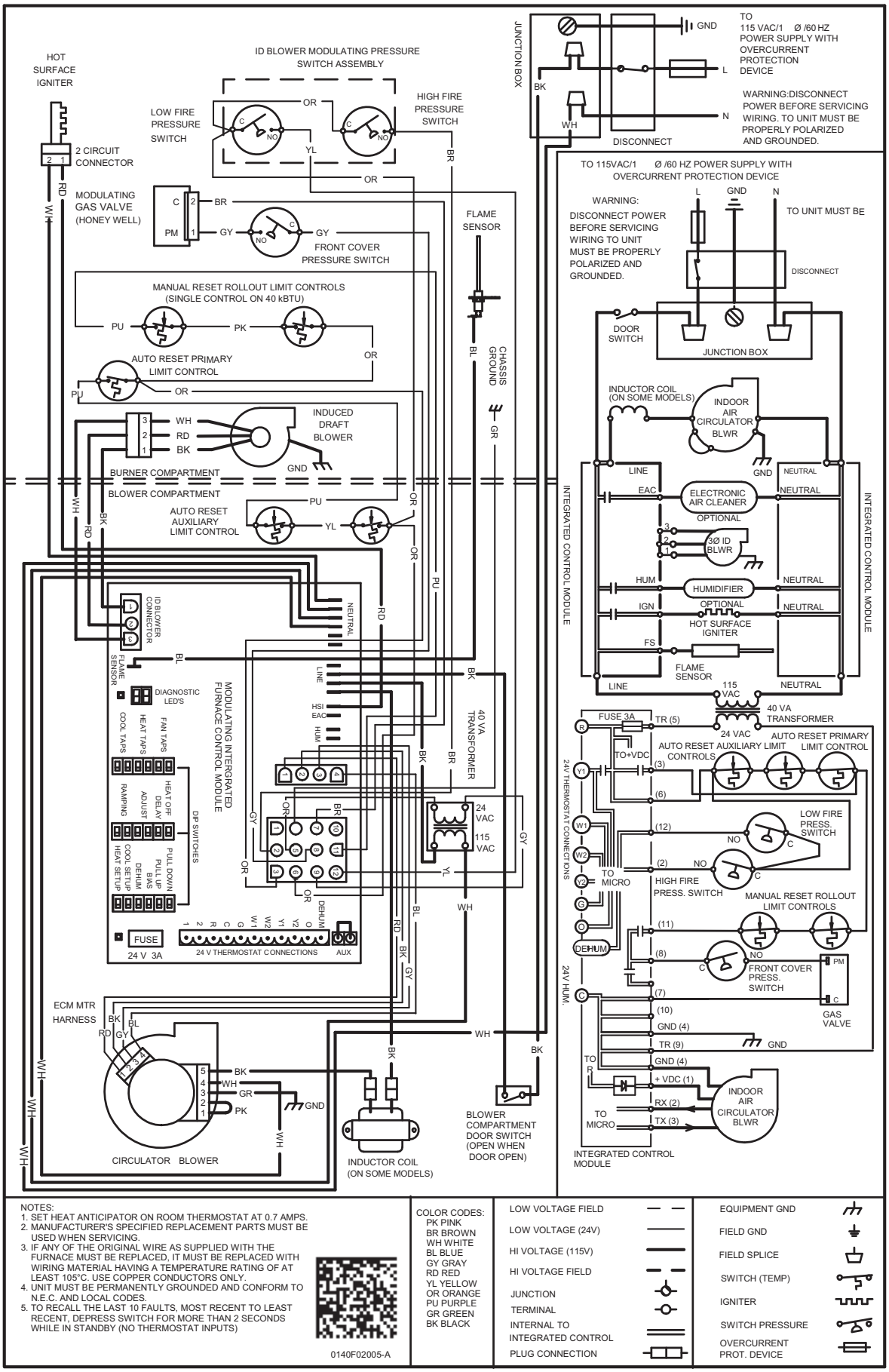

NOTES:
1. SET HEAT ANTICIPATOR ON ROOM THERMOSTAT AT 0.7 AMPS.
2. MANUFACTURER'S SPECIFIED REPLACEMENT PARTS MUST BE USED WHEN SERVICING.
3. IF ANY OF THE ORIGINAL WIRE AS SUPPLIED WITH THE FURNACE MUST BE REPLACED, IT MUST BE REPLACED WITH WIRING MATERIAL HAVING A TEMPERATURE RATING OF AT LEAST 105°C. USE COPPER CONDUCTORS ONLY.
4. UNIT MUST BE PERMANENTLY GROUNDED AND CONFORM TO N.E.C. AND LOCAL CODES.
5. TO RECALL THE LAST 10 FAULTS, MOST RECENT TO LEAST RECENT, DEPRESS SWITCH FOR MORE THAN 2 SECONDS WHILE IN STANDBY (NO THERMOSTAT INPUTS)

0140F02005-A

COLOR CODES:
PK PINK
BR BROWN
WH WHITE
BL BLUE
GY GRAY
RD RED
YL YELLOW
OR ORANGE
PU PURPLE
GR GREEN
BK BLACK

LOW VOLTAGE FIELD
LOW VOLTAGE (24V)
HI VOLTAGE (115V)
HI VOLTAGE FIELD
JUNCTION
TERMINAL
INTERNAL TO INTEGRATED CONTROL
PLUG CONNECTION

EQUIPMENT GND
FIELD GND
FIELD SPLICE
SWITCH (TEMP)
IGNITER
SWITCH PRESSURE
OVERCURRENT PROT. DEVICE

Wiring is subject to change. Always refer to the wiring diagram on the unit for the most up-to-date wiring.