DAIKIN Service Instructions

DCG Gas Electric/DCC Cooling/DCH Heat Pumps
Commercial Package Units
with R-410A Refrigerant
3 - 6 Tons & Accessories

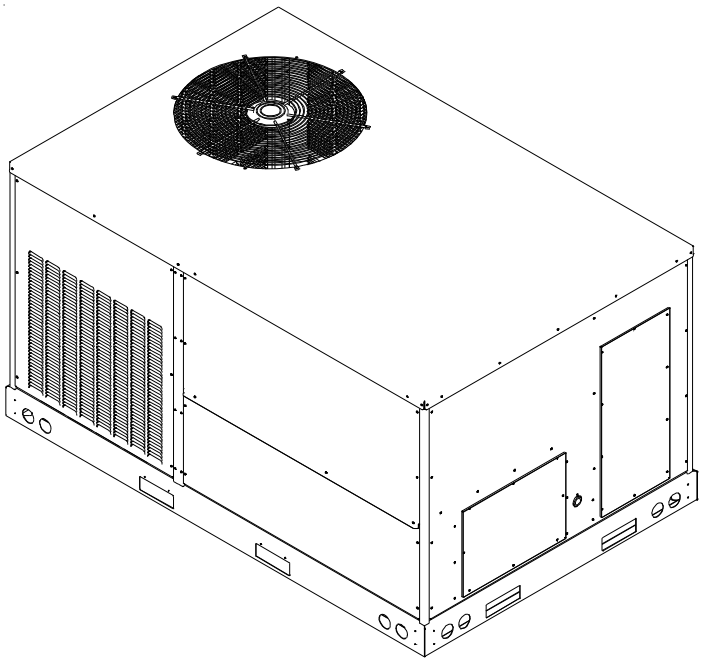

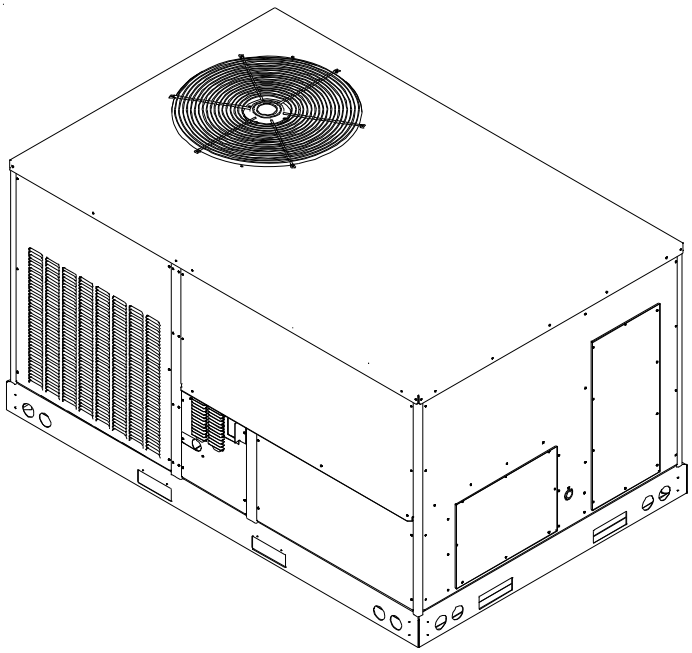

This manual is to be used by qualified, professionally trained HVAC technicians only. Daikin does not assume any responsibility for property damage or personal injury due to improper service procedures or services performed by an unqualified person.

Copyright © 2013-2017 DAIKIN COMPANY, L.P.

RSD6412006r41
November 2017

TABLE OF CONTENTS

IMPORTANT INFORMATION ..... 2 - 3
PRODUCTION IDENTIFICATION ..... 4 - 15
PRODUCT DESIGN 16- 19
SYSTEM OPERATION ..... 20 - 33
SCHEDULED MAINTENANCE ..... 34 - 35
TROUBLESHOOTING CHARTS ..... 36 - 37
SERVICING TABLE OF CONTENTS 38
SERVICING ..... 39 - 67
ACCESSORIES ..... 68 - 72
ACCESSORIES WIRING DIAGRAMS ..... 73 - 87
HEATER KITS 88
HEATER KIT WIRING DIAGRAMS ..... 89 -101
UNIT WIRING DIAGRAMS ..... 102 - 133

IMPORTANT INFORMATION

Pride and workmanship go into every product to provide our customers with quality products. It is possible, however, that during its lifetime a product may require service. Products should be serviced only by a qualified service technician who is familiar with the safety procedures required in the repair and who is equipped with the proper tools, parts, testing instruments and the appropriate service manual. **REVIEW ALL SERVICE INFORMATION IN THE APPROPRIATE SERVICE MANUAL BEFORE BEGINNING REPAIRS.**

IMPORTANT NOTICES FOR CONSUMERS AND SERVICERS

RECOGNIZE SAFETY SYMBOLS, WORDS AND LABELS

WARNING

This unit should not be connected to, or used in conjunction with, any devices that are not design certified for use with this unit or have not been tested and approved by the manufacturer. Serious property damage or personal injury, reduced unit performance and/or hazardous conditions may result from the use of devices that have not been approved or certified by the manufacturer.

WARNING

Only personnel that have been trained to install, adjust, service or repair (hereinafter, "service") the equipment specified in this manual should service the equipment. The manufacturer will not be responsible for any injury or property damage arising from improper service or service procedures. If you service this unit, you assume responsibility for any injury or property damage which may result. In addition, in jurisdictions that require one or more licenses to service the equipment specified in this manual, only licensed personnel should service the equipment. Improper installation, adjustment, servicing or repair of the equipment specified in this manual, or attempting to install, adjust, service or repair the equipment specified in this manual without proper training may result in product damage, property damage, personal injury or death.

WARNING

Do not store combustible materials or use gasoline or other flammable liquids or vapors in the vicinity of this appliance as property damage or personal injury could occur. Have your contractor point out and identify the various cut-off devices, switches, etc., that serves your comfort equipment.

WARNING

HIGH VOLTAGE!
Disconnect ALL power before servicing or installing this unit. Multiple power sources may be present. Failure to do so may cause property damage, personal injury or death.

To locate an authorized servicer, please consult your telephone book or the dealer from whom you purchased this product. For further assistance, please contact:

CONSUMER INFORMATION LINE - DAIKIN BRAND PRODUCTS
TOLL FREE 1-855-770-5678 (U.S. only)
email us at: customerservice@daikinac.com
fax us at: (713) 856-1821
(Not a technical assistance line for dealers.)
Outside the U.S., call 1-713-861-2500
(Not a technical assistance line for dealers.)
Your telephone company will bill you for the call.

IMPORTANT INFORMATION

SAFE REFRIGERANT HANDLING

While these items will not cover every conceivable situation, they should serve as a useful guide.

WARNING

Refrigerants are heavier than air. They can "push out" the oxygen in your lungs or in any enclosed space.To avoid possible difficulty in breathing or death:

- **Never purge refrigerant into an enclosed room or space. By law, all refrigerants must be reclaimed.**
- **If an indoor leak is suspected, thoroughly ventilate the area before beginning work.**
- **Liquid refrigerant can be very cold. To avoid possible frostbite or blindness, avoid contact with refrigerant and wear gloves and goggles. If liquid refrigerant does contact your skin or eyes, seek medical help immediately.**
- **Always follow EPA regulations. Never burn refrigerant, as poisonous gas will be produced.**

WARNING

To avoid possible explosion:

- **Never apply flame or steam to a refrigerant cylinder. If you must heat a cylinder for faster charging, partially immerse it in warm water.**
- **Never fill a cylinder more than 80% full of liquid refrigerant.**
- **Never add anything other than R-22 to an R-22 cylinder or R-410A to an R-410A cylinder. The service equipment used must be listed or certified for the type of refrigerant used.**
- **Store cylinders in a cool, dry place. Never use a cylinder as a platform or a roller.**

WARNING

To avoid possible injury, explosion or death, practice safe handling of refrigerants.

WARNING

The compressor POE oil for R-410A units is extremely susceptible to moisture absorption and could cause compressor failure. Do not leave system open to atmosphere any longer than necessary for installation.

WARNING

To avoid possible explosion, use only returnable (not disposable) service cylinders when removing refrigerant from a system.

- **Ensure the cylinder is free of damage which could lead to a leak or explosion.**
- **Ensure the hydrostatic test date does not exceed 5 years.**
- **Ensure the pressure rating meets or exceeds 400 lbs.**

When in doubt, do not use cylinder.

WARNING

System contaminants, improper service procedure and/or physical abuse affecting hermetic compressor electrical terminals may cause dangerous system venting.

The successful development of hermetically sealed refrigeration compressors has completely sealed the compressor's moving parts and electric motor inside a common housing, minimizing refrigerant leaks and the hazards sometimes associated with moving belts, pulleys or couplings.

Fundamental to the design of hermetic compressors is a method whereby electrical current is transmitted to the compressor motor through terminal conductors which pass through the compressor housing wall. These terminals are sealed in a dielectric material which insulates them from the housing and maintains the pressure tight integrity of the hermetic compressor. The terminals and their dielectric embedment are strongly constructed, but are vulnerable to careless compressor installation or maintenance procedures and equally vulnerable to internal electrical short circuits caused by excessive system contaminants.

In either of these instances, an electrical short between the terminal and the compressor housing may result in the loss of integrity between the terminal and its dielectric embedment. This loss may cause the terminals to be expelled, thereby venting the vaporous and liquid contents of the compressor housing and system.

A venting compressor terminal normally presents no danger to anyone, providing the terminal protective cover is properly in place.

If, however, the terminal protective cover is not properly in place, a venting terminal may discharge a combination of

(a) hot lubricating oil and refrigerant

(b) flammable mixture (if system is contaminated with air)

in a stream of spray which may be dangerous to anyone in the vicinity. Death or serious bodily injury could occur.

Under no circumstances is a hermetic compressor to be electrically energized and/or operated without having the terminal protective cover properly in place.

See Service Section S-17 for proper servicing.

PRODUCT IDENTIFICATION

D	C	G	060	090	3	B	*	*	*	A	*
1	2	3	4,5,6	7,8,9	10	11	12	13	14	15	16

Revision Levels

Major & Minor

Brand

D Daikin

Configurat on

C Standard Efficiency (6 - 25 Tons)
S Standard Efficiency (3 - 5 Tons)
T High Efficiency (3 - 5 Tons)

Application

C Cooling[1]
G Gas Heat
H Heat Pump[1]

Nominal Cooling Capacity

036	3 Tons	102	8½ Tons	300	25 Tons
048	4 Tons	120	10 Tons		
060	5 Tons	150	12½ tons		
072	6 Tons	180	15 Tons		
090	7½ Tons	240	20 Tons		

Nominal Heating Capacity

Gas/Electric		A/C H/P Factory-Installed Electric Heat			
045	45,000 BTU/h	XXX	No Heat		
070	70,000 BTU/h	010	10 kW	030	30 kW
090	90,000 BTU/h	015	15 kW	031	30 kW
115	115,000 BTU/h	016	15 kW	045	45 kW
140	140,000 BTU/h	018	18 kW	046	45 kW
210	210,000 BTU/h	020	20 kW	060	60 kW
350	350,000 BTU/h	025	25 kW		
400	400,000 BTU/h				

See product specifications for heat size(s) available for each capacity.

Voltage

1	208-230/1/60	4	460/3/60
3	208-230/3/60	7	575/3/60

Supply Fan/Drive Type/Motor

B Belt Drive (single speed)
D Direct Drive (3-5 Tons)
V Two-Speed Belt Drive (also designates 6-Ton with two-stage compressor)
H High Static (single-speed Belt Drive models only)

Factory-Installed Options

A Ultra Low-Leak Downflow Economizer
B DDC-BACnet protocol
F Ultra Low-Leak Downflow Economizer; DDC-BACnet protocol
H Disconnect Switch (non-fused)
J Ultra Low-Leak Downflow Economizer; Disconnect Switch (non-fused)
M Disconnect Switch (non-fused); DDC-BACnet protocol
R Ultra Low-Leak Downflow Economizer; DDC-BACnet protocol; Disconnect Switch (non-fused)
V Low-Leak Downflow Economizer
W Low-Leak Downflow Economizer Disconnect Switch (non-fused)
X No Options

Note: Not all options available for all products.

[1] X= No Options in character 13th

Factory-Installed Options

X No Options
A Non-powered convenience outlet
B Powered convenience outlet
C Low-ambient kit
D Return air smoke detector
E Supply air smoke detector
F Non-powered convenience outlet; Low-ambient kit
G Non-powered convenience outlet; Return air smoke detector
H Non-powered convenience outlet; Supply air smoke detector
J Non-powered convenience outlet; Return & Supply air smoke detectors
K Non-powered convenience outlet; Low-ambient kit; Supply air smoke detector
L Non-powered convenience outlet; Low-ambient kit Return & Supply air smoke detectors
M Powered convenience outlet; Low-ambient kit
N Powered convenience outlet; Return air smoke detector
O Powered convenience outlet; Return & Supply air smoke detectors
P Powered convenience outlet; Supply air smoke detector
Q Powered convenience outlet; Low-ambient kit; Return air smoke detector
R Powered convenience outlet; Low-ambient kit; Supply air smoke detector
T Powered convenience outlet; Low-ambient kit; Return & Supply air smoke detectors
U Non-powered convenience outlet; Low-ambient kit; Return air smoke detector
V Low-ambient kit; Return air smoke detector
W Low-ambient kit; Supply air smoke detector
Y Low-ambient kit; Return & Supply air smoke detectors
Z Return & Supply air smoke detectors

Factory-Installed Options

X Standard Aluminized Heat Exchanger
S Stainless-Steel Heat Exchanger
D Hinged Panels
K Stainless-Steel Heat Exchanger; Hinged Panels
B Phase Monitor
J Stainless Steel Heat Exchanger; Phase Monitor
M Hinged Panel; Phase Monitor
L Stainless-Steel Heat Exchanger; Hinged Panels; Phase Monitor

PRODUCT IDENTIFICATION

Factory-Installed Options

- Stainless-Steel Heat Exchanger (Gas only units): A tubular heat exchanger made of 409-type stainless steel is installed in the unit.
- Low-Ambient Kit: Allows for cooling operation at lower outdoor temperatures. On the 3- to 6-ton units, cooling operation is extended from 60°F ambient temperature to 35°F outside air temperature. On 7½ -20 ton units, cooling operation is extended from 35°F ambient temperature to 0°F outside air temperature. For 25 ton units, cooling operation is extended from 24°F ambient temperature to 0°F outside air temperature.
- Economizers (Downflow): Based on air conditions, can provide outside air to cool the space.
- Electric Heat Kits (heat pump and cooling units only): Available in all voltage options.
- Non-powered Convenience Outlet: A 120V, 15A, GFCI outlet makes it easier for technicians to service the unit once an electrician runs power to the outlet.
- Powered Convenience Outlet: A 120V, 15A, GFCI outlet powered with a transformer built into the unit. When a factory-installed powered convenience outlet is installed in the equipment, the unit MCA (Min. Circuit Ampacity) will increase by 7.5A for 208/230V units, increase by 3.75A for 460V units, and by 3A for 575V units. The MOP (Max. Overcurrent Protection) device must be sized accordingly.
- Disconnect Switch (non-fused; 3-phase units only): A disconnect switch is installed in the unit and factory wiring will be complete from the switch to the unit. Please note that for air conditioning and heat pump models, the appropriate electric heat kit must be ordered to be factory-installed along with the disconnect switch (non-fused) when it is ordered. Please note that for models with a powered convenience outlet option and a disconnect switch (non-fused) option, the power to the powered convenience outlet will be shut off when the disconnect switch (non-fused) is in the off position.
- Return Air and/or Supply Air Smoke Detectors: Return air and/or supply air smoke detectors are installed in the unit.
- Hinged Access Panels: Allows access to unit's major components. Combined with latches for easy access to control box, compressor, filters and blower motor. Available on all units.
- Two-speed indoor fan blower models are available on 6, 7½, 8½, 10, 12½, 15, 20 & 25 ton units. Section 6.4.3.10.b of ASHRAE Standard 90.1-2010 and Section 6.5.3.2.1.a of ASHRAE Standard 90.1-2013 require a minimum of two fan speeds. Section 140.4(m)1 of California Energy Commission Title 24 2013 contains a similar provision. When the units with the two-speed indoor fan blowers operate on a call for the first stage of cooling, the fan operates at low speed, which is 66% of full speed. When the units operate on a call for the second stage of cooling, the fan operates at full speed. In heating operation, the fan operates at full speed. During ventilation operation, the fan operates at low speed.
- Return Air and/or Supply Air Smoke Detectors: Return air and/or supply air smoke detectors are installed in the unit.
- Hinged Access Panels: Allows access to unit's major components. Combined with latches for easy access to control box, compressor, filters and blower motor. Available on all models.
- Phase Monitor: Phase monitor (3 phase only), available for 3 - 25 ton DS, DC and DT series models. Phase monitor shall provide protection for motors and compressors against problems caused by phase loss, phase reversal and phase unbalance. Phase monitor is equipped with an LED that provides an ON or FAULT indicator.
- DDC Controller: DDC communicating controller, available for 3 - 25 ton DS, DC and DT series models with on-board BACnet* communication interface.

PRODUCT IDENTIFICATION DCH***XXX**XXX

Daikin Commercial Multiposition Package Heat Pumps	
Models	**Description**
DCH[036-060]XXX1DXXXAA	Daikin Commercial Package Heat Pump, Multiposition heat pump units, 208V-230V 1 Phase Direct Drive. Initial release of Daikin branded models.
DCH[036-060]XXX1DXXXAB	Daikin Commercial Package Heat Pump, Multiposition heat pump units, 208V-230V 1 Phase Direct Drive. Release of models with cabinet redesign to improve stripped screws.
DCH[036-060]XXX3DXXXAA	Daikin Commercial Package Heat Pump, Multiposition heat pump units, 208V-230V 3 Phase Direct Drive. Initial release of Daikin branded models.
DCH[036-060]XXX3DXXXAB	Daikin Commercial Package Heat Pump, Multiposition heat pump units, 208V-230V 3 Phase Direct Drive. Release of models with cabinet redesign to improve stripped screws.
DCH[036-072]XXX3BXXXAA	Daikin Commercial Package Heat Pump, Multiposition heat pump units, 208V-230V 3 Phase Belt Drive. Initial release of Daikin branded models.
DCH[036-072]XXX3BXXXAB	Daikin Commercial Package Heat Pump, Multiposition heat pump units, 208V-230V 3 Phase Belt Drive. Release of models with cabinet redesign to improve stripped screws.
DCH[036-072]XXX4BXXXAA	Daikin Commercial Package Heat Pump, Multiposition heat pump units, 460V 3 Phase Belt Drive. Initial release of Daikin branded models.
DCH[036-072]XXX4BXXXAB	Daikin Commercial Package Heat Pump, Multiposition heat pump units, 460V 3 Phase Belt Drive. Release of 3-6 Ton models with condenser motor updates.
DCH[036-072]XXX4BXXXAC	Daikin Commercial Package Heat Pump, Multiposition heat pump units, 460V 3 Phase Belt Drive. Release of models with cabinet redesign to improve stripped screws.
DCH[036-072]XXX7BXXXAA	Daikin Commercial Package Heat Pump, Multiposition heat pump units, 575V 3 Phase Belt Drive. Initial release of Daikin branded models.
DCH[036-072]XXX7BXXXAB	Daikin Commercial Package Heat Pump, Multiposition heat pump units, 575V 3 Phase Belt Drive. Release of models with cabinet redesign to improve stripped screws.
DCH072XXX[3,4,7]VXXXAA	Daikin Commercial Package Heat Pump, Multiposition heat pump units, 208-230V, 460V & 575V 3 Phase Belt Drive. Release of models with a 2-speed indoor motor and 2-stage compressor.
DCH0600204BXXXAC	Daikin Commercial Package Heat Pump, Multiposition heat pump units, 460V 3 Phase Belt Drive. Factory installed options. (20kW Electric Heat)
DCH[060,072][XXX,020]4BXXA[AB,AC]	Daikin Commercial Package Heat Pump, Multiposition heat pump units, 460V 3 Phase Belt Drive. Factory installed options. (20kW Electric Heat,Non-Powered Convenience Outlet)
DCH072XXX[3,4]BXXB[AA,AC]	Daikin Commercial Package Heat Pump, Multiposition heat pump units, 208-230V & 460V 3 Phase Belt Drive. Factory installed options. (Powered Convenience Outlet)
DCH[036,048][XXX,010]3BXXCAA DCH[060,072][XXX,010,015]3BXXCAB	Daikin Commercial Package Heat Pump, Multiposition heat pump units, 208-230V 3 Phase Belt Drive. Factory installed options. (Low Ambient Kit)
DCH048XXX4BXXEAC	Daikin Commercial Package Heat Pump, Multiposition heat pump units,460V 3 Phase Belt Drive. Factory installed options. (Supply Smoke Detector)
DCH0480103BXXFAA	Daikin Commercial Package Heat Pump, Multiposition heat pump units, 208-230V 3 Phase Belt Drive. Factory installed options. (Downflow Economizer,Non-Powered Convenience Outlet, Low Ambient Kit)
DCH072XXX3BAXZAB	Daikin Commercial Package Heat Pump, Multiposition heat pump units, 208-230V 3 Phase Belt Drive. Factory installed options. (Ultra Low-Leak Downflow Economizer, Return & Supply Air Smoke Detectior)
DCH036XXX3BXXJAB DCH072XXX3BXXJAB	Daikin Commercial Package Heat Pump, Multiposition heat pump units, 208-230V 3 Phase Belt Drive. Factory installed options. (Non-powered Convenience Outlet, Return & Supply Air Smoke Detector)
DCH[060,072][010,015]3BXXLAA	Daikin Commercial Package Heat Pump, Multiposition heat pump units, 208-230V 3 Phase Belt Drive. Factory installed options. (Non-powered Convenience Outlet, Low Ambient Kit, Return& Supply Air Smoke Detector)
DCH[060,072]XXX3BXXWAA	Daikin Commercial Package Heat Pump, Multiposition heat pump units, 208-230V 3 Phase Belt Drive. Factory installed options. (Low Ambient Kit, Return & Supply Air Smoke Detector)
DCH036[010,020]3BAXX[AA,AB] DCH060[010,020]3BAXX[AA,AB]	Daikin Commercial Package Heat Pump, Multiposition heat pump units, 208-230V 3 Phase Belt Drive. Factory installed options. (Downflow Economizer)
DCH0720204BAXBAB	Daikin Commercial Package Heat Pump, Multiposition heat pump units, 460V 3 Phase Belt Drive. Factory installed options. (Downflow Economizer, Powered Convenience Outlet)
DCH[048,060][010,015,020][3,]4BAXC[AB,AC]	Daikin Commercial Package Heat Pump, Multiposition heat pump units, 460V 3 Phase Belt Drive. Factory installed options. (Downflow Economizer, Low Ambient Kit)
DCH[036-060]0103BAXFAA	Daikin Commercial Package Heat Pump, Multiposition heat pump units, 208-230V 3 Phase Belt Drive. Factory installed options. (Downflow Economizer,Non-Powered Convenience Outlet, Low Ambient Kit)
DCH[060,072]XXX3BAXHAB	Daikin Commercial Package Heat Pump, Multiposition heat pump units, 208-230V 3 Phase Belt Drive. Factory installed options. (Downflow Economizer, Non-powered Convenience Outlet, Supply Air Smoke Detector)
DCH0600153DAXNAB	Daikin Commercial Package Heat Pump, Multiposition heat pump units, 208-230V 1 Phase Direct Drive. Factory installed options. (Downflow Economizer, Powered Convenience Outlet, Return Air Smoke Detector)
DCH0720203BAXNAB	Daikin Commercial Package Heat Pump, Multiposition heat pump units, 208-230V 3 Phase Belt Drive. Factory installed options. (Downflow Economizer, Powered Convenience Outlet, Return Air Smoke Detector)
DCH060XXX[3,4,7]BBXXAA	Daikin Commercial Package Heat Pump, Multiposition heat pump units, 208-230V,460V & 575V 3 Phase Belt Drive. Factory installed options. (DDC Control)
DCH0720203BHXXAA	Daikin Commercial Package Heat Pump, Multiposition heat pump units, 208-230V 3 Phase Belt Drive. Factory installed options. (Disconnect Switch)
DCH0480153BHXB[AA,AB] DCH060[015,020]3BHXB[AA,AB]	Daikin Commercial Package Heat Pump, Multiposition heat pump units, 208V-230V 3 Phase Belt Drive. Factory installed options. (Electric Heat, Disconnect Switch, Powered Convenience Outlet)
DCH0360153BHXFAB DCH0480184BHXFAC	Daikin Commercial Package Heat Pump, Multiposition heat pump units, 208-230V & 460V 3 Phase Belt Drive. Factory installed options. (Electric Heat Option, Disconnect Switch, Non-Powered Convenience Outlet, Low Ambient Kit)

These units have R410A refrigerant

PRODUCT IDENTIFICATION DCH***XXX**XXX

Daikin Commercial Multiposition Package Heat Pumps	
Models	**Description**
DCH0600103DHXGAA	Daikin Commercial Package Heat Pump, Multiposition heat pump units, 208-230V 1 Phase Direct Drive. Factory installed options. (Disconnect Switch,Non-Powered Convenience Outlet, Return Air Smoke Detector)
DCH0600153BHXMAB DCH0720103BHXMAB	Daikin Commercial Package Heat Pump, Multiposition heat pump units, 208V-230V 3 Phase Belt Drive. Factory installed options. (Electric Heater Kit, Downflow Economizer, Disconnect Switch, Non-Powered Convenience Outlet, Low Ambient Kit)
DCH0720157BJXXAB	Daikin Commercial Package Heat Pump, Multiposition heat pump units, 575V 3 Phase Belt Drive. Factory installed options. (Downflow Economizer, Disconnect Switch)
DCH[060,072][010,020,XXX][3,4]BJXF[AA,AB,AC]	Daikin Commercial Package Heat Pump, Multiposition heat pump units, 208-230V & 460v 3 Phase Belt Drive. Factory installed options. (Downflow Economizer, Disconnect Switch, Non-powered Convenience Outlet, Low Ambient Kit)
DCH060XXX4BJXHAC	Daikin Commercial Package Heat Pump, Multiposition heat pump units,460V 3 Phase, Belt Drive. Factory installed options. (Disconnect Switch,Downflow Economizer,Non-powered Convenience Outlet,Supply Air Smoke Return)
DCH0600103BXXBAB	Daikin Commercial Package Heat Pump, Multiposition heat pump units, 208-230V 3 Phase Belt Drive. Factory installed options. (Disconnect Switch (on-fused) Non-Powered Convenience Outlet, Low Ambient Kit)
DCH0600154BHXFAC	Daikin Commercial Package Heat Pump, Multiposition heat pump units, 460V 3 Phase Belt Drive. Factory installed options. (Powered Convenience Outlet, Return Air Smoke Detector)
DCH060XXX3BAXFAB	Daikin Commercial Package Heat Pump, Multiposition heat pump units, 208-230V 3 Phase Belt Drive. Factory installed options. (Ultra Low-Leak Downflow Economizer, Non-Powered Convenience Outlet, Low Ambient Kit)
DCH0480184BXXBAC	Daikin Commercial Package Heat Pump, Multipositon heat pump units, 460V 1 Phase Belt Drive. Factory installed options. (Standard Aluminized Heat Exchanger, Powered convienience outlet)
DCH072015154BHXOAC	Daikin Commercial Package Heat Pump, Multiposition heat pump units, 460V 1 Phase Belt Drive. Factory Installed Options. (Disconnect Switch (non-fused), Standard Aluminized Heat Exchanger, Powered convenience outlet; Return & Supply air smoke detectors)
DCH036XXX3BJXLAA DCH072XXX3BJXLAA	Daikin Commercial Package Heat Pump, Multiposition heat pump units, 208-230V 3 Phase Belt Drive. Factory installed options. (Downflow Economizer, Disconnect Switch,Non-Powered Convenience Outlet, Low Ambient Kit, Return & Supply Air Smoke Detector)
DCH0360104BJXQAB	Daikin Commercial Package Heat Pump, Multiposition heat pump units,460V 3 Phase Belt Drive. Factory installed options. (Non-Powered Convenience Outlet, Low Ambient Kit)
DCH0360104BHXFAC	Daikin Commercial Package Heat Pump, Multiposition heat pump units,460V 3 Phase Belt Drive. Factory installed options. (Disconnect Switch (non fused), Non-Powered Convenience Outlet, Low Ambient Kit)
DCH0900304BHMCAB	Daikin Commercial Package Heat Pump, Multiposition heat pump units, 460V 3 Phase Belt Drive. Factory installed options. (Disconnect Switch (non-fused), Hinged Panels (3-12 1/2 Tons); Phase Monitor, Low Ambient Kit)

PRODUCT IDENTIFICATION DCH***XXX**XXX

Daikin Commercial Multiposition Package Heat Pumps	
Models	**Description**
DCH[036-060]XXX1DXXXAA	Daikin Commercial Package Heat Pump, Multiposition heat pump units, 208V-230V 1 Phase Direct Drive. Initial release of Daikin branded models.
DCH[036-060]XXX1DXXXAB	Daikin Commercial Package Heat Pump, Multiposition heat pump units, 208V-230V 1 Phase Direct Drive. Release of models with cabinet redesign to improve stripped screws.
DCH[036-060]XXX3DXXXAA	Daikin Commercial Package Heat Pump, Multiposition heat pump units, 208V-230V 3 Phase Direct Drive. Initial release of Daikin branded models.
DCH[036-060]XXX3DXXXAB	Daikin Commercial Package Heat Pump, Multiposition heat pump units, 208V-230V 3 Phase Direct Drive. Release of models with cabinet redesign to improve stripped screws.
DCH[036-072]XXX3BXXXAA	Daikin Commercial Package Heat Pump, Multiposition heat pump units, 208V-230V 3 Phase Belt Drive. Initial release of Daikin branded models.
DCH[036-072]XXX3BXXXAB	Daikin Commercial Package Heat Pump, Multiposition heat pump units, 208V-230V 3 Phase Belt Drive. Release of models with cabinet redesign to improve stripped screws.
DCH[036-072]XXX4BXXXAA	Daikin Commercial Package Heat Pump, Multiposition heat pump units, 460V 3 Phase Belt Drive. Initial release of Daikin branded models.
DCH[036-072]XXX4BXXXAB	Daikin Commercial Package Heat Pump, Multiposition heat pump units, 460V 3 Phase Belt Drive. Release of 3-6 Ton models with condenser motor updates.
DCH[036-072]XXX4BXXXAC	Daikin Commercial Package Heat Pump, Multiposition heat pump units, 460V 3 Phase Belt Drive. Release of models with cabinet redesign to improve stripped screws.
DCH[036-072]XXX7BXXXAA	Daikin Commercial Package Heat Pump, Multiposition heat pump units, 575V 3 Phase Belt Drive. Initial release of Daikin branded models.
DCH[036-072]XXX7BXXXAB	Daikin Commercial Package Heat Pump, Multiposition heat pump units, 575V 3 Phase Belt Drive. Release of models with cabinet redesign to improve stripped screws.
DCH072XXX[3,4,7]VXXXAA	Daikin Commercial Package Heat Pump, Multiposition heat pump units, 208-230V, 460V & 575V 3 Phase Belt Drive. Release of models with a 2-speed indoor motor and 2-stage compressor.
DCH0600204BXXXAC	Daikin Commercial Package Heat Pump, Multiposition heat pump units, 460V 3 Phase Belt Drive. Factory installed options. (20kW Electric Heat)
DCH[060,072][XXX,020]4BXXA[AB,AC]	Daikin Commercial Package Heat Pump, Multiposition heat pump units, 460V 3 Phase Belt Drive. Factory installed options. (20kW Electric Heat,Non-Powered Convenience Outlet)
DCH072XXX[3,4]BXXB[AA,AC]	Daikin Commercial Package Heat Pump, Multiposition heat pump units, 208-230V & 460V 3 Phase Belt Drive. Factory installed options. (Powered Convenience Outlet)
DCH[036,048][XXX,010]3BXXCAA DCH[060,072][XXX,010,015]3BXXCAB	Daikin Commercial Package Heat Pump, Multiposition heat pump units, 208-230V 3 Phase Belt Drive. Factory installed options. (Low Ambient Kit)
DCH048XXX4BXXEAC	Daikin Commercial Package Heat Pump, Multiposition heat pump units,460V 3 Phase Belt Drive. Factory installed options. (Supply Smoke Detector)
DCH0480103BXXFAA	Daikin Commercial Package Heat Pump, Multiposition heat pump units, 208-230V 3 Phase Belt Drive. Factory installed options. (Downflow Economizer,Non-Powered Convenience Outlet, Low Ambient Kit)
DCH036XXX3BXXJAB DCH072XXX3BXXJAB	Daikin Commercial Package Heat Pump, Multiposition heat pump units, 208-230V 3 Phase Belt Drive. Factory installed options. (Non-powered Convenience Outlet, Return & Supply Air Smoke Detector)
DCH072XXX3VVXDAA	Daikin Commercial Package Heat Pump, Multiposition heat pump units, 208-230V 3 Phase, Two-Speed Belt Drive (Low-Leak Downflow Economizer, Return Air Smoke Detector)
DCH[060,072][010,015]3BXXLAA	Daikin Commercial Package Heat Pump, Multiposition heat pump units, 208-230V 3 Phase Belt Drive. Factory installed options. (Non-powered Convenience Outlet, Low Ambient Kit, Return& Supply Air Smoke Detector)
DCH[060,072]XXX3BXXWAA	Daikin Commercial Package Heat Pump, Multiposition heat pump units, 208-230V 3 Phase Belt Drive. Factory installed options. (Low Ambient Kit, Return & Supply Air Smoke Detector)
DCH036[010,020]3BAXX[AA,AB] DCH060[010,020]3BAXX[AA,AB]	Daikin Commercial Package Heat Pump, Multiposition heat pump units, 208-230V 3 Phase Belt Drive. Factory installed options. (Downflow Economizer)
DCH0720204BAXBAB	Daikin Commercial Package Heat Pump, Multiposition heat pump units, 460V 3 Phase Belt Drive. Factory installed options. (Downflow Economizer, Powered Convenience Outlet)
DCH[048,060][010,015,020][3,]4BAXC[AB,AC]	Daikin Commercial Package Heat Pump, Multiposition heat pump units, 460V 3 Phase Belt Drive. Factory installed options. (Downflow Economizer, Low Ambient Kit)
DCH[036-060]0103BAXFAA	Daikin Commercial Package Heat Pump, Multiposition heat pump units, 208-230V 3 Phase Belt Drive. Factory installed options. (Downflow Economizer,Non-Powered Convenience Outlet, Low Ambient Kit)
DCH[060,072]XXX3BAXHAB	Daikin Commercial Package Heat Pump, Multiposition heat pump units, 208-230V 3 Phase Belt Drive. Factory installed options. (Downflow Economizer, Non-powered Convenience Outlet, Supply Air Smoke Detector)
DCH0600104BXXXAC	Daikin Commercial Package Heat Pump, Multiposition heat pump units, 208-230V, Belt Drive, Factory installed options. (Electric Heat)
DCH0600153DAXNAB	Daikin Commercial Package Heat Pump, Multiposition heat pump units, 208-230V 1 Phase Direct Drive. Factory installed options. (Downflow Economizer, Powered Convenience Outlet, Return Air Smoke Detector)
DCH0720203BAXNAB	Daikin Commercial Package Heat Pump, Multiposition heat pump units, 208-230V 3 Phase Belt Drive. Factory installed options. (Downflow Economizer, Powered Convenience Outlet, Return Air Smoke Detector)
DCH060XXX[3,4,7]BBXXAA	Daikin Commercial Package Heat Pump, Multiposition heat pump units, 208-230V,460V & 575V 3 Phase Belt Drive. Factory installed options. (DDC Control)
DCH[036,048][010,015]3DHXXAA DCH0600153DHXXAA	Daikin Commercial Package Heat Pump, Multiposition heat pump units, 208-230V 1 Phase Direct Drive. Factory installed options. (Disconnect Switch)
DCH0720203BHXXAA	Daikin Commercial Package Heat Pump, Multiposition heat pump units, 208-230V 3 Phase Belt Drive. Factory installed options. (Disconnect Switch)
DCH0480153BHXB[AA,AB] DCH060[015,020]3BHXB[AA,AB]	Daikin Commercial Package Heat Pump, Multiposition heat pump units, 208V-230V 3 Phase Belt Drive. Factory installed options. (Electric Heat, Disconnect Switch, Powered Convenience Outlet)
DCH0360153BHXFAB DCH0480184BHXFAC	Daikin Commercial Package Heat Pump, Multiposition heat pump units, 208-230V & 460V 3 Phase Belt Drive. Factory installed options. (Electric Heat Option, Disconnect Switch, Non-Powered Convenience Outlet, Low Ambient Kit)

These units have R410A refrigerant

PRODUCT IDENTIFICATION DCC***XXX**XXX

Daikin Commercial Multiposition Package Coolers	
Models	**Description**
DCC0[36/048][010/015]4BHXJ[AB,AC] DCC072[015/010]4BHXJ[AB,AC]	Daikin Commercial Package Cooler, Multiposition cooling,460V 3 Phase, Belt Drive. Factory Installed options. (Disconnect Switch Non-powered Convenience Outlet, Return & Supply Smoke Detectors)
DCC0720253BHXNAA	Daikin Commercial Package Cooler, Multiposition cooling, 208-230V 3 Phase, Belt Drive. Factory installed options. (Disconnect Switch, Powered Convenience Outlet, Return Air Smoke Detector)
DCC[060,072][XXX,015][3,4]BHXO[AA,AB,AC]	Daikin Commercial Package Cooler, Multiposition cooling, 208-230V & 460V 3 Phase, Belt Drive. Factory installed options. (Disconnect Switch, Powered Convenience Outlet, Return&Supply Air Smoke Detectors)
DCC060XXX4BHXRAB	Daikin Commercial Package Cooler, Multiposition cooling, 460V 3 Phase, Belt Drive. Factory Installed options. (Disconnect Switch, Powered Convenience Outlet, Low Ambient Kit, Supply Air Smoke Detector)
DCC0720153BHXZ[AA,AB]	Daikin Commercial Package Cooler, Multiposition cooling, 208-230V 3 Phase, Belt Drive. Factory installed options. (Disconnect Switch, Return &Supply Return Smoke Detectors)
DCC0480154BJDBAC	Daikin Commercial Package Cooler, Multiposition cooling, 460V 3 Phase, Belt Drive. Factory Installed options. (Ultra Low-Leak Downflow Economizer, Disconnect Switch, Hinged Doors, Powered Convenience Outlet)
DCC0600154BJDNAC	Daikin Commercial Package Cooler, Multiposition cooling, 460V 3 Phase, Belt Drive. Factory Installed options. (Ultra Low-Leak Downflow Economizer, Disconnect Switch, Hinged Doors, Powered Convenience Outlet, Return Air Smoke Detector)
DCC048XXX3BJXAAA	Daikin Commercial Package Cooler, Multiposition cooling,208-230V 3 Phase, Belt Drive. Factory Installed options. (Downflow Economizer, Disconnect Switch, Non-powered Convenience Outlet)
DCC0600204BVDXAC	Daikin Commercial Package Cooler, Multiposition cooling,460V 3 Phase, Belt Drive. Factory Installed options. (Low-Leak Downflow Economizer, Hinged Panels, Electric Heater Kit)
DCC0720103BHXAAB	Daikin Commercial Package Cooler, Multiposition cooling,208-230V 3 Phase, Belt Drive. Factory Installed options. (Disconnect Switch (non-fused), Non-Powered Convenience Outlet)
DCC[036-060]0103BJXFAA DCC[060/072][020/015]3BJXFAA	Daikin Commercial Package Cooler, Multiposition cooling,208-230V 3 Phase, Belt Drive. Factory Installed options. (Downflow Economizer, Disconnect Switch, Non-powered Convenience Outlet, Low Ambient Kit)
DCC048XXX4BVXXAC	Daikin Commercial Package Cooler, Multiposition cooling, 460V 3 Phase, Belt Drive. Factory Installed options. (Low-Leak Downflow Economizer)
DCC048XXX4BJXGAB	Daikin Commercial Package Cooler, Multiposition cooling, 460V 3 Phase, Belt Drive. Factory Installed options. (Downflow Economizer, Disconnect Switch, Non-Powered Convenience Outlet, Return Smoke Detectors)
DCC072XXX3BJXLAA	Daikin Commercial Package Cooler, Multiposition cooling, 208-230V 3 Phase, Belt Drive. Factory Installed options. (Downflow Economizer, Disconnect Switch, Non-powered Convenience Outlet, Low Ambient Kit, Return &Supply Return Smoke Detectors)
DCC048XXX3BJXMAA	Daikin Commercial Package Cooler, Multiposition cooling, 208-230V 3 Phase, Direct Drive. Factory Installed options. (Downflow Economizer, Disconnect Switch, Powered Convenience Outlet, Low Ambient Kit)
DCC0430183DXDCAB	Daikin Commercial Package Cooler, Multiposition cooling, 208-230V 3 Phase, Direct Drive. Factory Installed options. (Hinged Panels, Low Ambient Kit)
DCC0480104BJXTAC	Daikin Commercial Package Cooler, Multiposition cooling, 460V 3 Phase, Belt Drive. Factory Installed options. (Downflow Economizer, Disconnect Switch, Powered Convenience Outlet, Low Ambient Kit, Return & Supply Smoke Detectors)
DCC07220254BJXUAB	Daikin Commercial Package Cooler, Multiposition cooling, 460V 3 Phase, Belt Drive. Factory Installed options. (Downflow Economizer, Disconnect Switch, Non-powered Convenience Outlet, Low Ambient Kit, Return Smoke Detectors)
DCC0720254BHXBAC	Daikin Commercial Package Cooler, Multiposition cooling, 460V 3 Phase, Belt Drive. Factory Installed options. (Disconnect switch(non-fused), Standard Aluminized Heat Exchanger, Powered Convenience Outlet)
DCC0720154VXDZAA	Daikin Commercial Package Cooler, Multiposition cooling, 460V 3 Phase, Two-Speed Belt Drive. Factory Installed options. (Hinge Panels (3-12 1/2 Tons), Return & Supply air smoke detectors)
DCC072XXX4BFXXAC	Daikin Commercial Package Cooler, Multiposition cooling, 460V 3 Phase, Belt Drive. Factory Installed options. (Ultra Low-Leak Downflow Economizer; DDC-BACnet protocol)

These units have R410A refrigerant

PRODUCT IDENTIFICATION DCG***XXX**XXX

Daikin Commercial Multiposition Package Gas	
Models	**Description**
DCG036[045/090]1DXXXAA DCG048[090/115]1DXXXAA	Daikin Commercial Package Gas, R410A gas/electric units, 208-230V 1 Phase, Direct Drive. Initial release of 3-4 ton Daikin branded models.
DCG036[045/090]1DXXXAB DCG048[090/115]1DXXXAB	Daikin Commercial Package Gas, R410A gas/electric units, 208-230V 1 Phase, Direct Drive. Release of models with cabinet redesign to improve stripped screws.
DCG0600901DXXXAA DCG0601401DXXXAA	Daikin Commercial Package Gas, R410A gas/electric units, 208V 1 Phase, Direct Drive. Initial release of 5 ton models with 5mm condenser coils and Broad Ocean Digi Motor.
DCG0600901DXXXAB DCG0601401DXXXAB	Daikin Commercial Package Gas, R410A gas/electric units, 208V 1 Phase, Direct Drive. Release of models with cabinet redesign to improve stripped screws.
DCG036[045/090]3DXXXAA DCG048[090/115]3DXXXAA	Daikin Commercial Package Gas, R410A gas/electric units, 208-230V 3 Phase, Direct Drive. Initial release of 3-4 ton Daikin branded models.
DCG036[045/090]3DXXXAB DCG048[090/115]3DXXXAB	Daikin Commercial Package Gas, R410A gas/electric units, 208-230V 3 Phase, Direct Drive. Release of models with cabinet redesign to improve stripped screws.
DCG0601403BHXAAB	Daikin Commercial Package Gas, R410A gas/electric units, 208-230V& 460V 3 Phase, Belt Drive. Factory installed options. (Disconnect Switch (non-fused), Non-powered Convenience Outlet)
DCG0721407BXSXAB	Daikin Commercial Package Gas, R410A gas/electric units, 575V 3 Phase, Belt Drive. Factory installed options. (Stainless Steel Heat Exchanger)
DCG0600903DXXXAA DCG0601403DXXXAA	Daikin Commercial Package Gas, R410A gas/electric units, 208V-230V 3 Phase, Belt Drive. Initial release of 5 ton models with 5mm condenser coils and Broad Ocean Digi Motor.
DCG0600903DXXXAB DCG0601403DXXXAB	Daikin Commercial Package Gas, R410A gas/electric units, 208V-230V 3 Phase, Belt Drive. Release of models with cabinet redesign to improve stripped screws.
DCG036[045/090]3BXXXAA DCG048[090/115]3BXXXAA	Daikin Commercial Package Gas, R410A gas/electric units, 208-230V 3 Phase, Belt Drive. Initial release of 3-4 ton Daikin branded models.
DCG036[045/090]3BXXXAB DCG048[090/115]3BXXXAB	Daikin Commercial Package Gas, R410A gas/electric units, 208-230V 3 Phase, Belt Drive. Release of models with cabinet redesign to improve stripped screws.
DCG060[090/140]3BXXXAA DCG072[090/140]3BXXXAA	Daikin Commercial Package Gas, R410A gas/electric units, 208V-230V 3 Phase, Belt Drive. Initial release of 5-6 ton models with 5mm condenser coils.
DCG060[090/140]3BXXXAB DCG072[090/140]3BXXXAB	Daikin Commercial Package Gas, R410A gas/electric units, 208V-230V 3 Phase, Belt Drive. Release of models with cabinet redesign to improve stripped screws.
DCG036[045/090]4BXXXAA DCG048[090/115]4BXXXAA	Daikin Commercial Package Gas, R410A gas/electric units, 460V 3 Phase, Belt Drive. Initial release of 3-4 ton Daikin branded models.
DCG060[090/140]4BXXXAA DCG0721404BXXXAA	Daikin Commercial Package Gas, R410A gas/electric units, 460V 3 Phase, Belt Drive. Initial release of 5-6 ton models with 5mm condenser coils.
DCG0360907BXXXAA DCG0481157BXXXAA	Daikin Commercial Package Gas, R410A gas/electric units, 575V 3 Phase, Belt Drive. Initial release of 3-4 ton Daikin branded models.
DCG0360907BXXXAB DCG0481157BXXXAB	Daikin Commercial Package Gas, R410A gas/electric units, 575V 3 Phase, Belt Drive. Release of models with cabinet redesign to improve stripped screws.
DCG[060-072]1407BXXXAA	Daikin Commercial Package Gas, R410A gas/electric units, 575V 3 Phase, Belt Drive. Initial release of 5-6 ton models with 5mm condenser coils.
DCG[036-072]1407BXXXAB	Daikin Commercial Package Gas, R410A gas/electric units, 575V 3 Phase, Belt Drive. Release of models with cabinet redesign to improve stripped screws.
DCG072[090/155/140][3,4,7]VXXXAA	Daikin Commercial Package Gas, R410A gas/electric units, 208-230V, 460V & 575V 3 Phase, Belt Drive. Release of models with a 2-speed indoor motor and 2-stage compressor.
DCG0360901DXXA[AA,AB]	Daikin Commercial Package Gas, R410A gas/electric units, 208-230V 1 Phase, Direct Drive. Factory installed options. (Non-powered Convenience Outlet)
DCG[036,048,060][045,090]3DXXAAB	Daikin Commercial Package Gas, R410A gas/electric units, 208-230V 3-Phase, Direct Drive. Factory installed options. (Non-Powered Convenience Outlet)
DCG[048,036][045,090]3BXXA(AA,AB) DCG[060,072][090,140][3/4]BXXA[AA,AB,AC]	Daikin Commercial Package Gas, R410A gas/electric units, 208-230V& 460V 3 Phase, Belt Drive. Factory installed options. (Non-powered Convenience Outlet)
DCG[036,048]0903DXXBAB DCG0601403DXXBAB	Daikin Commercial Package Gas, R410A gas/electric units, 208-230V 3-Phase, Direct Drive. Factory installed options. (Powered Convenience Outlet)
DCG[036,048][045,090]3BXXBAB DCG[060,072][090,140]3BXXBAB	Daikin Commercial Package Gas, R410A gas/electric units,208-230V 3 Phase, Belt Drive. Factory installed options. (Powered Convenience Outlet)
DCG[036-060]090[3,4]BXXC[AA,AB] DCG0721403BXXCAA	Daikin Commercial Package Gas, R410A gas/electric units, 208-230V & 460V 3 Phase, Belt Drive. Factory installed options. (Low Ambient Kit)
DCG0481157BXXFAA	Daikin Commercial Package Gas, R410A gas/electric units, 575V 3 Phase, Belt Drive. Factory installed options. (Non-Powered Convenience Outlet, Low Ambient Kit)
DCG[036,048,060][045,090]3DXXGAB	Daikin Commercial Package Gas, R410A gas/electric units, 208-230V 3-Phase, Direct Drive. Factory installed options. (Non-Powered Convenience Outlet, Return Air Smoke Detector)
DCG0481153DJXXAB	Daikin Commercial Package Gas, R410A gas/electric units, 208-230V, 3-Phase, Direct Drive, Ultra Low-Leak Downflow Economizer, (Non-Powered Convenience Outlet, Disconnect Switch (non-fused))
DCG0481153DJKGAB	Daikin Commercial Package Gas, R410A gas/electric units, 208-230V, 3-Phase, Direct Drive, Ultra Low-Leak Downflow Economizer, (Non-Powered Convenience Outlet, Low Ambient Kit, Supply Air Smoke Detector,
DCG0481153BXDXAB	Daikin Commercial Package Gas, R410A gas/electric units, 208-230V, 3-Phase, Belt Drive, Hinged panels
DCG0481153BXXGAB DCG[060,072]1403BXXGAB	Daikin Commercial Package Gas, R410A gas/electric units, 208-230V 3 Phase, Belt Drive. Factory installed options. (Non-Powered Convenience Outlet,Return Air Smoke Detector)
DCG[036,048]0903BXXDAB DCG0721403BXXDAB	Daikin Commercial Package Gas, R410A gas/electric units, 208-230V 3 Phase, Belt Drive. Factory installed options. (Return Air Smoke Detector)

These units have R410A refrigerant

PRODUCT IDENTIFICATION DCG***XXX**XXX

Daikin Commercial Multiposition Package Gas	
Models	**Description**
DCG[048,060]0904BXXMAB	Daikin Commercial Package Gas, R410A gas/electric units, 460V 3 Phase, Belt Drive. Factory installed options. (Powered Convenience Outlet, Low Ambient Kit)
DCG0721404VXXTAA	Daikin Commercial Package Gas, R410A gas/electric units, 460V 3 Phase, 2 Speed Belt Drive. Factory installed options. (Powered Convenience Outlet, Low Ambient Kit, Return & Supply Air Smoke Detectors)
DCG0721403BXXUAA	Daikin Commercial Package Gas, R410A gas/electric units, 208-230V 3 Phase, Belt Drive. Factory installed options. (Non-Powered Convenience Outlet , Low Ambient Kit, Return Air Smoke Detector)
DCG0721403BJKGAB	Daikin Commercial Package Gas, R410A gas/electric units, 208-230V 3 Phase, Belt Drive. Ultra Low-Leak Downflow Economizer (Non-Powered Convenience Outlet , Low Ambient Kit, SupplyAir Smoke Detector)
DCG[036-060][045,090,115][3,7]BXDX[AA,AB] DCG[060,072]140[3,7]BXDX[AA,AB]	Daikin Commercial Package Gas, R410A gas/electric units, 208-230V 3 Phase, Belt Drive. Factory installed options. (Hinge Doors)
DCG0600903BJXJAB	Daikin Commercial Package Gas, R410A gas/electric units, 208-230V 3 Phase, Belt Drive,(Ultra Low-Leak Downflow Economizer: Disconnect Switch (non-fused), Standard Aluminized Heat Exchanger, Non-Powered Convenience Oulet; Supply Air Smoke Detector)
DCG0360903BJXFAB	Daikin Commercial Package Gas, R410A gas/electric units, 208-230V 3 Phase, Belt Drive,(Ultra Low-Leak Downflow Economizer: Disconnect Switch (non-fused), Non-Powered Convenience Oulet, Low Ambient Kit)
DCG0600903BHSXAB	Daikin Commercial Package Gas, R410A gas/electric units, 208-230V 3 Phase, Belt Drive. Factory installed options. (Disconnect Switch (non-fused), Stainless Steel Heat Exchanger)
DCG0600903BHXGAC	Daikin Commercial Package Gas, R410A gas/electric units, 208-230V 3 Phase, Belt Drive. Factory installed options. (Disconnect Switch (non-fused), Non-Powered Convenience Outlet, Return Air Smoke Detector)
DCG0600903BXDAAB	Daikin Commercial Package Gas, R410A gas/electric units, 208-230V 3 Phase, Belt Drive. Factory installed options. (Hinged Door Panels, Non-Powered Convenience Outlet)
DCG0360901DXSA[AA,AB]	Daikin Commercial Package Gas, R410A gas/electric units, 208-230V 1 Phase, Direct Drive. Factory installed options. (Stainless Steel Heat Exchange, Non-powered Convenience Outlet)
DCG0601403BHSXAB	Daikin Commercial Package Gas, R410A gas/electric units, 208-230V 3 Phase, Belt Drive. Factory installed options. (Disconnect Switch (Non Fused), Stainless Steel Heat Exchanger)
DCG0601403BJXFAB	Daikin Commercial Package Gas, R410A gas/electric units, 208-230V 3 Phase, Belt Drive. Factory installed options. (Ultra Low Leak Downflow Economizer, Disconnect Switch (Non Fused), Non Powered Convenience Outlet, Low Ambient Kit.)
DCG0601403BXSFAA	Daikin Commercial Package Gas, R410A gas/electric units, 208-230V 3 Phase, Belt Drive. Factory installed options. (Stainless Steel Heat Exchanger, Non-Powered Convenience Outlet, Low Ambient Kit)
DCG[036,060][090,140]1DXSXAA DCG[036,060][045,090]3DXSXAB	Daikin Commercial Package Gas, R410A gas/electric units, 208-230V 1 Phase & 208-230V 3-Phase, Direct Drive. Factory installed options. (Stainless Steel Heat Exchanger)
DCG[036,048][045/090/115][3/4/7]BXSX[AA,AB,AC] DCG[060,072][090/140][3/4/7]BXSX[AA,AB,AC]	Daikin Commercial Package Gas, R410A gas/electric units, 208-230V, 460V & 575V 3 Phase, Belt Drive. Factory installed options. (Stainless Steel Heat Exchanger)
DCG0360903DXSZ[AA,AB]	Daikin Commercial Package Gas, R410A gas/electric units, 208-230V 3 Phase, Direct Drive. Factory installed options. (Stainless Steel Heat Exchanger, Return & Supply Air Smoke Detectors)
DCG0360904BXSZAC	Daikin Commercial Package Gas, R410A gas/electric units, 460V 3 Phase, Belt Drive. Factory installed options. (Stainless Steel Heat Exchanger, Return & Supply Air Smoke Detector)
DCG0360903BASAAA	Daikin Commercial Package Gas, R410A gas/electric units, 208-230V 3 Phase, Belt Drive. Factory installed options. (Downflow Economizer, Stainless Steel Heat Exchanger, Non-Powered Convenience Outlet)
DCG0721404VAXXAA	Daikin Commercial Package Gas, R410A gas/electric units, 460V 3 Phase, 2-Speed Belt Drive. Factory Installed Options. (Ultra Low Leak Downflow Economizer)
DCG[036,048][090,115][3/4/7]BAXX[AA,AB,AC] DCG[060,072]140[3,4,7]BAXX[AA,AB,AC]	Daikin Commercial Package Gas, R410A gas/electric units, 208-230V, 460V & 575V 3 Phase, Belt Drive. Factory installed options. (Downflow Economizer)
DCG[036,048][045,090]3DAXX[AA,AB]	Daikin Commercial Package Gas, R410A gas/electric units, 208-230V 3 Phase, Direct Drive. Factory installed options. (Downflow Economizer)
DCG060[090,140][3,7]BAXA[AA,AB]	Daikin Commercial Package Gas, R410A gas/electric units, 208-230V & 575V 3 Phase, Belt Drive. Factory installed options. (Downflow Economizer & Non Powered Convenience Outlet)
DCG0480903BAXGAA	Daikin Commercial Package Gas, R410A gas/electric units, 208-230V 3 Phase, Belt Drive. Factory installed options. (Downflow Economizer, Non-powered Convenience Outlet, Return Air Smoke Detector)
DCG0480903BJXJAB	Daikin Commercial Package Gas, R410A gas/electric units, 208-230V 3 Phase, Belt Drive, Ultra Low-Leak Downflow Economizer:DDC-BACnet Protocol,Standard Aluminized Heat Exchanger, Non-powered Convenience Outlet; Return & Supply Air Smoke Detectors.
DCG[036,048][045,090]1DAXCAA DCG0600903BAXCAA	Daikin Commercial Package Gas, R410A gas/electric units, 208V 1 Phase & 208-230V 3 Phase, Direct Drive & Belt Drive. Factory installed options. (Downflow Economizer, Low Ambient Kit)
DCG[048,060][090,140]3DAXDAB	Daikin Commercial Package Gas, R410A gas/electric units, 208-230V 3 Phase, Direct Drive. Factory installed options. (Downflow Economizer, Return Air Smoke Detector)
DCG0721403BAXDAB	Daikin Commercial Package Gas, R410A gas/electric units, 208-230V 3 Phase, Belt Drive. Factory installed options. (Ultra Low Leak Downflow Economizer, Return Air Smoke Detector)
DCG0601403DAXGAB	Daikin Commercial Package Gas, R410A gas/electric units, 208-230V 3 Phase, Direct Drive. Factory installed options. (Ultra Low Leak Downflow Economizer, Non-Powered Convenience Outlet, Return Air Smoke Detector)
DCG0721404BAXJAB	Daikin Commercial Package Gas, R410A gas/electric units, 460V 3 Phase, Belt Drive. Factory installed options. (Downflow Economizer, Non-Powered Convenience Outlet)
DCG[036,048][045,090]4BAXMAB	Daikin Commercial Package Gas, R410A gas/electric units, 460V 3 Phase, Belt Drive. Factory installed options. (Downflow Economizer, Powered Convenience Outlet, Low Ambient Kit)
DCG[048,060]0903BAXOAB	Daikin Commercial Package Gas, R410A gas/electric units, 460V 3 Phase, Belt Drive. Factory installed options. (Disconnect Switch, Powered Convenience Outlet, Return & Supply Air Smoke Detector)
DCG0480903BAXZAB	Daikin Commercial Package Gas, R410A gas/electric units, 460V 3 Phase, Belt Drive. Factory installed options. (Downflow Economizer, Return and Supply Smoke Detector)
DCG0601404BAXVAB	Daikin Commercial Package Gas, R410A gas/electric units, 460V 3 Phase, Belt Drive. Factory installed options. (Downflow Economizer, Low Ambient Kit & Return Air Smoke Detector)

These units have R410A refrigerant

PRODUCT IDENTIFICATION DCG***XXX**XXX

Daikin Commercial Multiposition Package Gas	
Models	**Description**
DCG[036,060]0904BHDCAC DCG0721404BHDCAC	Daikin Commercial Package Gas, R410A gas/electric units, 460V 3 Phase, Belt Drive. Factory installed options. (Disconnect Switch, Hinged Panels, Low Ambient Kit)
DCG[048-060]0904BHSFAC DCG0721404BHSFAC	Daikin Commercial Package Gas, R410A gas/electric units, 460V 3 Phase, Belt Drive. Factory installed options. (Disconnect Switch, Stainless Steel Heat Exchanger, Non-Powered Convenience Outlet & Low Ambient Kit)
DCG048[090,115][4,7]BHXA[AB,AC] DCG[060,072][090,140][4,7]BHXA[AB,AC]	Daikin Commercial Package Gas, R410A gas/electric units, 460V & 575V 3 Phase, Belt Drive. Factory installed options. (Disconnect Switch,Non-Powered Convenience Outlet)
DCG0721403BHXBAB DCG[060,072][090,140]4BHXBAC	Daikin Commercial Package Gas, R410A gas/electric units, 208-230V & 460V 3 Phase, Belt Drive. Factory installed options. (Disconnect Switch, Non-Powered Convenience Outlet, Powered Convenience Outlet)
DCG036090[3,4]BHXBAB DCG[060,072][090,140][3,4]BHXB[AA,AB]	Daikin Commercial Package Gas, R410A gas/electric units, 208-230V & 460V 3 Phase, Belt Drive. Factory installed options. (Disconnect Switch, Powered Convenience Outlet)
DCG[048-060][115,140]3DHXB[AA,AB]	Daikin Commercial Package Gas, R410A gas/electric units, 208-230V 3 Phase, Direct Drive. Factory installed options. (Disconnect Switch, Powered Convenience Outlet)
DCG0601403DHXDAA	Daikin Commercial Package Gas, R410A gas/electric units, 208-230V 3 Phase, Direct Drive. Factory installed options. (Disconnect Switch, Return Air Smoke Detector)
DCG[060,072]140[3,4]BHXD[AB,AC]	Daikin Commercial Package Gas, R410A gas/electric units, 208-230V & 460V 3 Phase, Belt Drive. Factory installed options. (Disconnect Switch, Return Air Smoke Detector)
DCG[036,048][045,090,115][3,4]BHXF[AA,AB,AC] DCG[060,072]1403BHXFAB	Daikin Commercial Package Gas, R410A gas/electric units, 208-230V & 460V 3 Phase, Belt Drive. Factory installed options. (Disconnect Switch, Non-Powered Convenience Outlet, Low Ambient Kit)
DCG0601403DHXGAB	Daikin Commercial Package Gas, R410A gas/electric units, 208-230V 3 Phase, Direct Drive. Factory installed options. (Disconnect Switch, Non-Powered Convenience Outlet, Return Air Smoke Detector)
DCG[048,072][090,140]3BHXG[AA,AB]	Daikin Commercial Package Gas, R410A gas/electric units, 208-230V 3 Phase, Belt Drive. Factory installed options. (Disconnect Switch,Non-Powered Convenience Outlet , Return Air Smoke Detector)
DCG0480904BVXXAC	Daikin Commercial Package Gas, R410A gas/electric units, 460V 3 Phase, Belt Drive. Factory installed options. (Low-Leak Downflow Economizer)
DCG0360904BHXHAC	Daikin Commercial Package Gas, R410A gas/electric units, 460V 3 Phase, Belt Drive. Factory installed options. (Disconnect Switch,Non-Powered Convenience Outlet , Supply Air Smoke Detector)
DCG0360903BHXMAB	Daikin Commercial Package Gas, R410A gas/electric units, 208-230V 3 Phase, Belt Drive. Factory installed options. (Disconnect Switch,Powered Convenience Outlet, Low Ambient Kit)
DCG0481153DHXMAB	Daikin Commercial Package Gas, R410A gas/electric units, 208-230V 3 Phase, Direct Drive. Factory installed options. (Disconnect Switch, Non-Powered Convenience Outlet)
DCG0600903BBDHAB	Daikin Commercial Package Gas, R410A gas/electric units, 208-230V, Belt Drive. Factory installed options. (DDC-BACnet Protocol, Hinged Panels, Non-powered Convenience Outlet. Supply Air Smoke Detectors.)
DCG[060,072][090,140][3,4]BHXNAB	Daikin Commercial Package Gas, R410A gas/electric units, 208-230V & 460V 3 Phase, Belt Drive. Factory installed options. (Disconnect Switch, Powered Convenience Outlet, Return Air Smoke Detector)
DCG06000903DJXXAB	Daikin Commercial Package Gas, R410A gas/electric units, 208-230V 3 Phase, Direct Drive. Factory installed options. (Ultra Low-Leak Downflow Economizer, Disconnect Switch (non-fused))
DCG0600903BHXQAB	Daikin Commercial Package Gas, R410A gas/electric units, 208-230V 3 Phase, Belt Drive. Factory installed options. (Disconnect Switch, Powered Convenience Outlet, Low-Ambient Kit, Return Air Smoke Detectors)
DCG0600903BJXJAB	Daikin Commercial Package Gas, R410A gas/electric units, 208-230V 3 Phase, Belt Drive.(Ultra Low-Leak Downflow Economizer; Disconnect Switch (non-fused), Non-Powered Convenience Outlet, Return & Supply Air Smoke Detector.)
DCG[048,060]0903BHXUAA DCG0721403BHXUAB	Daikin Commercial Package Gas, R410A gas/electric units, 208-230V 3 Phase, Belt Drive. Factory installed options. (Disconnect Switch,Non-Powered Convenience Outlet , Low Ambient Kit, Return Air Smoke Detector)
DCG[036,048][090,115][3,7]BJSA[AA,AB] DCG060[090,140][3,4]BJSA[AA,AB,AC]	Daikin Commercial Package Gas, R410A gas/electric units, 208-230V, 460V & 575V 3 Phase, Belt Drive. Factory installed options. (Downflow Economizer,Disconnect Switch, Stainless Steel Heat Exchanger,Non-Powered Convenience Outlet)
DCG0600904BJSBAC	Daikin Commercial Package Gas, R410A gas/electric units, 460V 3 Phase, Belt Drive. Factory installed options. (Ultra Low Leak Downflow Economizer, Disconnect Switch, Stainless Steel Heat Exchanger, Powered Convenience Outlet, Low Ambient Kit)
DCG0600904BXSGAC	Daikin Commercial Package Gas, R410A gas/electric units, 460V, Belt Drive, (Factory Installed Options, Non-Powered convenience Outlet; Return Air Smoke Detector)
DCG[036-048]090[3,4]BJSF[AA,AB, AC] DCG[060-072]140[3,4]BJSF[AA]	Daikin Commercial Package Gas, R410A gas/electric units, 208-230V & 460V 3 Phase, Belt Drive. Factory installed options. (Downflow Economizer, Stainless Steel Heat Exchanger, Disconnect Switch, Non-Powered Convenience Outlet, Low Ambient Kit)
DCG0360903BJSJAA	Daikin Commercial Package Gas, R410A gas/electric units, 208-230V 3 Phase, Belt Drive. Factory installed options. (Downflow Economizer,Disconnect Switch, Stainless Steel Heat Exchanger, Non-Powered Convenience Outlet, Return&Supply Smoke Detector)
DCG0360903BJKGAB	Daikin Commercial Package Gas, R410A gas/electric units, 208-230V 3 Phase, Belt Drive. Factory installed options. (Ultra Low- Leak Downflow Economizer, Disconnect Switch (non-fused)Stainless Steel Heat Exchanger, Hinged Panels, Non-Powered Convenience O
DCG[048,060]0904BJSMAB	Daikin Commercial Package Gas, R410A gas/electric units, 460V 3 Phase, Belt Drive. Factory installed options. (Downflow Economizer, Disconnect Switch, Stainless Steel Heat Exchanger, Powered Convenience Outlet, Low Ambient Kit)
DCG0360903DJSNAB	Daikin Commercial Package Gas, R410A gas/electric units, 208-230V 3 Phase, Direct Drive. Factory installed options. (Downflow Economizer, Stainless Steel Heat Exchanger, Disconnect Switch, Powered Convenience Outlet, Return Air Smoke Detector)
DCG[060-072]1403BJSNAB	Daikin Commercial Package Gas, R410A gas/electric units, 208-230V 3 Phase, Belt Drive. Factory installed options. (Downflow Economizer, Stainless Steel Heat Exchanger, Disconnect Switch, Powered Convenience Outlet, Return Air Smoke Detector)
DSC0601403BXSXAB	Daikin Commercial Package Gas, R410A gas/electric units, 208-230V 3 Phase, Belt Drive. Factory installed options. (Stainless Steel Heat Exchanger)

These units have R410A refrigerant

DCG0480904BJSQAC	Daikin Commercial Package Gas, R410A gas/electric units, 460V 3 Phase, Belt Drive. Factory installed options. (Downflow Economizer, Stainless Steel Heat Exchanger, Disconnect Switch, Powered Convenience Outlet, Low Ambient Kit, Return Air Smoke Detector)
DCG0721403BJXXAA	Daikin Commercial Package Gas, R410A gas/electric units, 208-230V 3 Phase, 2-Speed Belt Drive. Factory installed options. (Downflow Economizer, Disconnect Switch)
DCG0721403VVSXAA	Daikin Commercial Package Gas, R410A gas/electric units, 208-230V 3 Phase, Belt Drive. Factory installed options. (Downflow Economizer, Stainless-Steel Heat Exchanger)
DCG0721403BJXJAB	Daikin Commercial Package Gas, R410A gas/electric units, 208-230V 3 Phase, Belt Drive. Factory installed options.(Ultra Low-Leak Downflow Economizer; Disconnect switch (non-fused).Non-powered convenience outlet, Return and Supply Air Smoke Detectors)
DCG0721404BVXXAC	Daikin Commercial Package Gas, R410A gas/electric units, 460V, 3 Phase, Belt Drive. Factory installed options.(Low-Leak Downflow Economizer)
DCG[036-048][045,090,115][3,4]BJXA[AA,AB,AC] DCG[060-072]1403BJXA[AA,AB]	Daikin Commercial Package Gas, R410A gas/electric units, 208-230V & 460V 3 Phase, Belt Drive. Factory installed options. (Downflow Economizer, Disconnect Switch (non-fused), Non Powered Convenience outlet)
DCG[036,048]090[4,7]BJXB[AB,AC] DCG0721404BJXBAC	Daikin Commercial Package Gas, R410A gas/electric units,460V & 575V 3 Phase, Belt Drive. Factory installed options. (Disconnect Switch,Downflow Economizer,Powered Convenience Outlet)
DCG0601403DJXBAB	Daikin Commercial Package Gas, R410A gas/electric units,208-230V 3 Phase, Direct Drive. Factory installed options. (Disconnect Switch,Downflow Economizer,Powered Convenience Outlet)
DCG0480103BJXBAB DCG[060-072]1403BJXBAB	Daikin Commercial Package Gas, R410A gas/electric units, 208-230V 3 Phase, Belt Drive. Factory installed options. (Downflow Economizer, Disconnect Switch, Powered Convenience Outlet)
DCG0601403DJXC[AA,AB]	Daikin Commercial Package Gas, R410A gas/electric units, 208-230V 3 Phase, Direct Drive. Factory installed options. (Downflow Economizer, Disconnect Switch, Powered Convenience Outlet, Low Ambient Kit)
DCG[036-048][045,090][3,4]BJXF[AA,AB,AC] DCG[060-072]140[3,4]BJXF[AA,AB]	Daikin Commercial Package Gas, R410A gas/electric units, 208-230V & 460V 3 Phase, Belt Drive. Factory installed options. (Downflow Economizer, Disconnect Switch, Non-Powered Convenience Outlet, Low Ambient Kit)
DCG[036,048][090]1157BASX[AA,AB] DCG0601407BASXAB	Daikin Commercial Package Gas, R410A gas/electric units, 575V 3 Phase, Belt Drive. Factory installed options. (Downflow Economizer, Stainless Steel Heat Exchanger)
DCG060090[3,4]BBXXAA DCG060140[3,4,7]BBXXAA	Daikin Commercial Package Gas, R410A gas/electric units, 208-230V,460V & 575V 3 Phase, Belt Drive. Factory installed options. (DDC Control)
DCG[036,048]0903BHXX[AA,AB] DCG072[015,140]3BHXX[AA,AB]	Daikin Commercial Package Gas, R410A gas/electric units, 208-230V 3 Phase, Belt Drive. Factory installed options. (Disconnect Switch)
DCG048[090,115]3BHXAAA DCG[060-072]1403BHXA[AA,AB]	Daikin Commercial Package Gas, R410A gas/electric units, 208-230V 3 Phase, Belt Drive. Factory installed options. (Disconnect Switch, Non-Powered Convenience Outlet)
DCG036[045,090][3,4]BHSA[AA,AB] DCG0601403BHSA[AA,AB]	Daikin Commercial Package Gas, R410A gas/electric units, 208-230V & 460V 3 Phase, Belt Drive. Factory installed options. (Disconnect Switch, Stainless Steel Heat Exchanger, Non-Powered Convenience Outlet)
DCG0360901DHSA[AA,AB]	Daikin Commercial Package Gas, R410A gas/electric units, 208V 1-Phase, Direct Drive. Factory installed options. (Disconnect Switch, Stainless Steel Heat Exchanger, Non-Powered Convenience Outlet)
DCG[036,060]0904BHSBAC DCG0721404BHSBAC	Daikin Commercial Package Gas, R410A gas/electric units, 460V 3 Phase, Belt Drive. Factory installed options. (Disconnect Switch, Stainless Steel Heat Exchanger, Powered Convenience Outlet)
DCG0721403BXXCAC	Daikin Commercial Package Gas, R410A gas/electric units, 208-230V, 3 Phase, Belt Drive. Factory Installed Options. (Standard Aluminized Heat Exchanger, Low Ambient Kit)
DCG0721403BAXNAB	Daikin Commercial Package Gas, R410A gas/electric units, 208-230V, 3 Phase, Belt Drive. Factory Installed Options. (Ultra Low-Leak Downflow Economizer, Standard Aluminized Heat Exchanger, Powered convenience outlet; Return air smoke detector)
DCG0721403BRJEAB	Daikin Commercial Package Gas, R410A gas/electric units, 208-230V, 3 Phase, Belt Drive. Factory Installed Options. (Ultra Low-Leak Downflow Economizer; Disconnect switch (non-fused); DDC-BACnet protocol, Stainless Steel Gas Heat Exchanger; Phase Monitor, Supply air smoke detector)
DCG0721403VHKPAA	Daikin Commercial Package Gas, R410A gas/electric units, 208-230V, 3 Phase, 2 Speed Belt Drive. Factory Installed Options. (Disconnect Switch (non-fused), Stainless Steel Gas Heat Exchanger; Hinged Panels (3-12 1/2 Tons), Powered convenience outlet; Supply air smoke detector)
DCG0721403VHXBAA	Daikin Commercial Package Gas, R410A gas/electric units, 208-230V, 3 Phase, 2 Speed Belt Drive. Factory Installed Options. (Disconnect Switch (non-fused), Standard Aluminized Heat Exchanger, Powered convenience outlet)
DCG0721403VVXDAA	Daikin Commercial Package Gas, R410A gas/electric units, 460V, 3 Phase, 2 Speed Belt Drive. Factory Installed Options. (Low-Leak Downflow Economizer, Standard Aluminized Heat Exchanger, Return air smoke detector)
DCG0721404VAXZAA	Daikin Commercial Package Gas, R410A gas/electric units, 208-230V, 3 Phase, 2 Speed Belt Drive. Factory Installed Options. (Ultra Low-Leak Downflow Economizer, Standard Aluminized Heat Exchanger, Return & Supply air smoke detectors)

These units have R410A refrigerant

PRODUCT IDENTIFICATION DCG***XXX**XXX

Daikin Commercial Multiposition Package Gas	
Models	**Description**
DCG[036,048]090[3,4]BJXGAB DCG[060,072]140[3,4]BJXG[AA,AB]	Daikin Commercial Package Gas, R410A gas/electric units, 208-230V & 460V 3 Phase, Belt Drive. Factory installed options. (Downflow Economizer,Disconnect Switch, Non-powered Convenience Outlet, Return Air Smoke Detector)
DCG048[090,115][3,4]BJXM[AB,AC]	Daikin Commercial Package Gas, R410A gas/electric units, 208-230V & 460V 3 Phase, Belt Drive. Factory installed options. (Downflow Economizer, Disconnect Switch, Powered Convenience Outlet, Low Ambient Kit)
DCG0481153DJXMAB	Daikin Commercial Package Gas, R410A gas/electric units, 208-230V 3 Phase, Direct Drive. Factory installed options. (Downflow Economizer, Disconnect Switch, Powered Convenience Outlet, Low Ambient Kit)
DCG[060,072][090,140]3BJXN[AA,AB,AC]	Daikin Commercial Package Gas, R410A gas/electric units, 208-230V 3 Phase, Belt Drive. Factory installed options. (Downflow Economizer, Disconnect Switch, Powered Convenience Outlet, Return Air Smoke Detector)
DCG[060,072]140[3,4]BJXO[AB,AC]	Daikin Commercial Package Gas, R410A gas/electric units, 460V 3 Phase, Belt Drive. Factory installed options. (Downflow Economizer, Disconnect Switch, Powered Convenience Outlet, Return/Supply Air Smoke Detector)
DCG0600904BJXQAC	Daikin Commercial Package Gas, R410A gas/electric units, 460V 3 Phase, Belt Drive. Factory installed options. (Ultra Low-Leak Downflow Economizer, Disconnect Switch, Powered Convenience Outlet, Low Ambient, Return Air Smoke Detector)
DCG0360903BJXUAA DCG[060,072][090,140]3BJXU[AA,AB]	Daikin Commercial Package Gas, R410A gas/electric units, 208-230V 3 Phase, Belt Drive. Factory installed options. (Ultra Low Leak Downflow Economizer, Disconnect Switch, Non-Powered Convenience Outlet, Low Ambient Kit, Return Air Smoke Detectors)
DCG0480903BJXZAB DCG[060,072][090,140]3BJXZAB	Daikin Commercial Package Gas, R410A gas/electric units, 208-230V 3 Phase, Belt Drive. Factory installed options. (Downflow Economizer, Disconnect Switch, Return & Supply Air Smoke Detectors)
DCG0721403BVDXAB	Daikin Commercial Package Gas, R410A gas/electric units, 208-230V 3 Phase, Belt Drive. Factory installed options. (Low Leak Downflow Economizer, Hinged Panels)
DCG0481153BXDXAB	Daikin Commercial Package Gas, R410A gas/electric units, 208-230V 3 Phase, Belt Drive. Factory installed options. (Hinged Panels)
DCG0481153DVDXAB	Daikin Commercial Package Gas, R410A gas/electric units, 208-230V 3 Phase, Direct Drive. Factory installed options. (Low Leak Downflow Economizer, Hinged Panels)
DCG[060,072]140[3,4]BVSX[AB,AC]	Daikin Commercial Package Gas, R410A gas/electric units, 208-230V & 460V 3 Phase, Belt Drive. Factory installed options. (Low Leak Downflow Economizer, Stainless Steel Heat Exchanger)
DCG0600903BWXGAB	Daikin Commercial Package Gas, R410A gas/electric units, 208-230V 3 Phase, Belt Drive. Factory installed options. (Disconnect Switch (non-fused), Stainless Steel Heat Exchanger, Hinged Panels, Non Powered Convenience Outlet, Return Air Smoke Detector)
DCG(036,048)0903BHKGAB	Daikin Commercial Package Gas, R410A gas/electric units, 208-230V 3 Phase, Belt Drive. Factory installed options. (Low-Leak Downflow Economizer, Disconnect Switch (non-fused), Non-Powered Convenience Outlet, Return air smoke detector)

Daikin Commercial Multiposition Package Gas	
Models	**Description**
DCG(036,048,060)0903DXDXAB	Daikin Commercial Package Gas, R410A gas/electric units, 208-230V 3 Phase, Direct Drive. Factory installed options. (Hinged Panels)
DCG(048,060,072)1153DHDFAB	Daikin Commercial Package Gas, R410A gas/electric units, 208-230V 3 Phase, Direct Drive. Factory installed options. Disconnect Switch (non-fused), Hinged Panels, Non-Powered Convenience Outlet, Low Ambient Kit)
DCG0360904BHXBAC	Daikin Commercial Package Gas, R410A gas/electric units, 460V 3 Phase, Belt Drive. Factory installed options. (Disconnect Switch (non-fused). Powered Convenience Outlet)
DCG0600904BVXXAC	Daikin Commercial Package Gas, R410A gas/electric units, 460V 3 Phase, Belt Drive. Factory installed options. (Low Leak Downflow Economizer)
DCG[036,048][045,090]4BWXBAC	Daikin Commercial Package Gas, R410A gas/electric units, 460V 3 Phase, Belt Drive. Factory installed options. (Low Leak Downflow Economizer, Disconnect Switch, Powered Convenience Outlet)
DCG0601403BHKGAB	Daikin Commercial Package Gas, R410A gas/electric units, 208-230V 3 Phase, Belt Drive. Factory installed options. (Disconnect Switch (non-fused), Stainless Steel Heat Exchanger, Hinged Panels, Non Powered Convenience Outlet, Return Air Smoke Detector.)
DCG0601404BHSFAC	Daikin Commercial Package Gas, R410A gas/electric units, 460V 3 Phase, Belt Drive. Factory installed options. (Disconnect Switch (non-fused), Stainless Steel Heat Exchanger, Non-Powered Convenience Outlet, Low ambient kit.)
DCG0601407BWXXAB	Daikin Commercial Package Gas, R410A gas/electric units, 575V 3 Phase, Belt Drive. Factory installed options. (Low Leak Downflow Economizer, Disconnect Switch)
DCG060090[3,4]BWXN[AB,AC]	Daikin Commercial Package Gas, R410A gas/electric units, 208-230 V & 460V 3 Phase, Belt Drive. Factory installed options. (Low Leak Downflow Economizer, Disconnect Switch, Powered Convenience Outlet, Return Air Smoke Detector)
DCG072[090,115]3VXXXAA	Daikin Commercial Package Gas, R410A gas/electric units, 208-230V 3 Phase, Two Speed Belt Drive. Factory installed options. (Standard Aluminized Heat Exchanger)
DCG072[090,115]4VXXXAA	Daikin Commercial Package Gas, R410A gas/electric units, 460V 3 Phase, Two Speed Belt Drive. Factory installed options. (Standard Aluminized Heat Exchanger)
DCG072[090,115]7VXXXAA	Daikin Commercial Package Gas, R410A gas/electric units, 575V 3 Phase, Two Speed Belt Drive. Factory installed options. (Standard Aluminized Heat Exchanger)
DCG0721404BHXDAC	Daikin Commercial Package Gas, R410A gas/electric units, 460V 3 Phase, Belt Drive. Factory installed options. (Disconnect Switch (non-fused), Standard Aluminized Heat Exchanger, Return air smoke detector)
DCG0721403BWXDAB	Daikin Commercial Package Gas, R410A gas/electric units, 208-230V 3 Phase, Belt Drive. Factory installed options. (Low-Leak Downflow Economizer; Disconnect Switch(non-fused), Standard Aluminized Heat Exchanger, Return Air Smoke Detector.)

PRODUCT IDENTIFICATION DCG***XXX**XXX

Daikin Commercial Multiposition Package Gas	
Models	**Description**
DCG0721404BHXFAC	Daikin Commercial Package Gas, R410A gas/electric units, 460V 3 Phase, Belt Drive. Factory installed options. (Disconnect Switch (non-fused), Standard Aluminized Heat Exchanger, Non-Powered Convenience Outlet, Low ambient kit.)
DCG0721403BHXXAB	Daikin Commercial Package Gas, R410A gas/electric units, 208-230V 3 Phase, Belt Drive. Factory installed options. (Disconnect Switch (non-fused), Standard Aluminized Heat Exchanger)
DCG0721403HJXUAB	Daikin Commercial Package Gas, R410A gas/electric units, 208-230V 3 Phase, Belt Drive. Factory installed options. (Disconnect Switch (non-fused), Standard Aluminized Heat Exchanger)
DCG0721403BHDDAB	Daikin Commercial Package Gas, R410A gas/electric units, 208-230V 3 Phase, Belt Drive. Factory installed options. (Disconnect Switch (non-fused), Hinge Panels (3-12 1/2), Return air smoke detector)
DCG0721403VXXQAA	Daikin Commercial Package Gas, R410A gas/electric units, 208-230V 3 Phase,Two Speed Belt Drive. Factory installed options. (Standard Aluminized Heat Exchanger, Powered convenience outlet; Low Ambient Kit; return air smoke detector)
DCG0721403BVXVAB	Daikin Commercial Package Gas, R410A gas/electric units, 208-230V 3 Phase, Belt Drive. Factory installed options. (Low Leak Downflow Economizer, Standard Aluminized Heat Exchanger, Low Ambient Kit; Return air smoke detector)
DCG0721404VWXJAA	Daikin Commercial Package Gas, R410A gas/electric units, 460V 3 Phase, Two Speed Belt Drive. Factory installed options. (Low-Leak Downflow Economizer; Disconnect Switch (non-fused), Standard Aluminized Heat Exchanger, Non-powered convenience outlet; Return & Supply air smoke detectors)
DCG0721404BWXNAC	Daikin Commercial Package Gas, R410A gas/electric units, 460V 3 Phase, Belt Drive. Factory installed options. (Low-Leak Downflow Economizer; disconnect Switch (non-fused),Standard Aluminized Heat Exchanger, Powered convenience outlet; Return air smoke detector)
DCG0721403VWXOAA	Daikin Commercial Package Gas, R410A gas/electric units, 208-230V 3 Phase,Two Speed Belt Drive. Factory installed options. (Low-Leak Downflow Economizer; Disconnect Switch (non-fused),Standard Aluminized Heat Exchanger, Powered convenience outlet; Return & Supply air smoke detectors)
DCG0721403BFXDAB	Daikin Commercial Package Gas, R410A gas/electric units, 208-230V 3 Phase, Belt Drive. Factory installed options. (Ultra Low-Leak Downflow Economizer; DDC-BACnet protocol, Standard Aluminized Heat Exchanger, Return air smoke detector)
DCG072093VAXXAA	Daikin Commercial Package Gas, R410A gas/electric units, 208-230V 3 Phase,Two Speed Belt Drive. Factory installed options. (Ultra Low-Leak Downflow Economizer, Standard Aluminized Heat Exchanger)
DCG0721404BWXGAC	Daikin Commercial Package Gas, R410A gas/electric units, 460V 3 Phase, Belt Drive. Factory installed options. (Low-Leak Downflow Economizer; disconnect Switch (non-fused),Standard Aluminized Heat Exchanger, Non-powered convenience outlet; Return air smoke detector)
DCG0721153VVSCAA	Daikin Commercial Package Gas, R410A gas/electric units, 208-230V 3 Phase,Two Speed Belt Drive. Factory installed options. (Low-Leak Downflow Economizer, Stainless Steel Heat Exchanger, Low Ambient Kit)
DCG0721403BXLCAB	Daikin Commercial Package Gas, R410A gas/electric units, 208-230V 3 Phase, Belt Drive. Factory installed options. (Stainless Steel Gas Heat Exchanger; Hinged Panels (3 - 12 1/2 Tons), Low Ambient Kit)
DCG0721404BAXXAC	Daikin Commercial Package Gas, R410A gas/electric units, 460V 3 Phase, Belt Drive. Factory installed options. (Ultra Low-Leak Downflow Economizer, Standard Aluminized Heat Exchanger)
DCG0721404BWDXAC	Daikin Commercial Package Gas, R410A gas/electric units, 460V 3 Phase, Belt Drive. Factory installed options. (Low-Leak Downflow Economizer; Disconnect Switch (non-fused), Hinge Panels (3- 12 1/2))
DCG0721403VXSXAA	Daikin Commercial Package Gas, R410A gas/electric units, 208-230V 3 Phase,Two Speed Belt Drive. Factory installed options. (Stainless Steel Heat Exchanger)

PRODUCT DESIGN

UNIT LOCATION

WARNING

TO PREVENT POSSIBLE EQUIPMENT DAMAGE, PROPERTY DAMAGE, PERSONAL INJURY OR DEATH, THE FOLLOWING BULLET POINTS MUST BE OBSERVED WHEN INSTALLING THE UNIT.

IMPORTANT NOTE: Remove wood shipping rails prior to installation of the unit.

ALL INSTALLATIONS:

NOTE: Appliance is shipped from factory for vertical duct application.
Proper installation of the unit ensures trouble-free operation. Improper installation can result in problems ranging from noisy operation to property or equipment damages, dangerous conditions that could result in injury or personal property damage and that are not covered by the warranty. Give this booklet to the user and explain it's provisions. The user should retain these instructions for future reference.

- For proper flame pattern within the heat exchanger and proper condensate drainage, the unit must be mounted level.
- The flue outlet must be at least 12 inches from any opening through which flue gases could enter a building, and at least three feet above any forced air inlet located within ten feet. The economizer/manual fresh air intake/ motorized fresh air intake and combustion air inlet mounted on the unit are not affected by this restriction.
- To avoid possible corrosion of the heat exchanger, do not locate the unit in an area where the outdoor air (i.e. combustion air for the unit) will be frequently contaminated by compounds containing chlorine or fluorine. Common sources of such compounds include swimming pool chemicals and chlorine bleaches, paint stripper, adhesives, paints, varnishes, sealers, waxes (which are not yet dried) and solvents used during construction and remodeling. Various commercial and industrial processes may also be sources of chlorine/fluorine compounds.
- To avoid possible illness or death of the building occupants, do NOT locate outside air intake device (economizer, manual fresh air intake, motorized fresh air intake) too close to an exhaust outlet, gas vent termination, or plumbing vent outlet. For specific distances required, consult local codes.
- Allow minimum clearances from the enclosure for fire protection, proper operation, and service access (see unit clearances). These clearances must be permanently maintained.
- The combustion air inlet and flue outlet on the unit must never be obstructed. If used, do not allow the economizer/manual fresh air damper/ motorized fresh air damper to become blocked by snow or debris. In some climates or locations, it may be necessary to elevate the unit to avoid these problems.
- When the unit is heating, the temperature of the return air entering the unit must be a minimum of 55° F.

GROUND LEVEL INSTALLATIONS ONLY:

- When the unit is installed on the ground adjacent to the building, a level concrete (or equal) base is recommended. Prepare a base that is 3" larger than the package unit footprint and a minimum of 3" thick.
- The base should also be located where no runoff of water from higher ground can collect in the unit.

ROOF TOP INSTALLATIONS ONLY:

- To avoid possible property damage or personal injury, the roof must have sufficient structural strength to carry the weight of the unit(s) and snow or water loads as required by local codes. Consult a structural engineer to determine the weight capabilities of the roof.
- The unit may be installed directly on wood floors or on Class A, Class B, or Class C roof covering material.
- To avoid possible personal injury, a safe, flat surface for service personnel should be provided.
- As indicated on the unit data plate, a minimum clearance of 36" to any combustible material is required on the furnace access side of the unit. All combustible materials must be kept out of this area.
- This 36" clearance must also be maintained to insure proper combustion air and flue gas flow. The combustion air intake and furnace flue discharge must not be blocked for any reason, including blockage by snow.
- Adequate clearances from the furnace flue discharge to any adjacent public walkways, adjacent buildings, building openings or openable windows must be maintained in accordance with the latest edition of the National Fuel Gas Code (ANSI Z223.1)
- Minimum horizontal clearance of 48" from the furnace flue discharge to any electric meters, gas meters, regulators and relief equipment is required.

UNIT PRECAUTIONS

- Do not stand or walk on the unit.
- Do not drill holes anywhere in panels or in the base frame of the unit except where indicated. Unit access panels provide structural support.
- Do not remove any access panels until unit has been installed on roof curb or field supplied structure.
- Do not roll unit across finished roof without prior approval of owner or architect.
- Do not skid or slide on any surface as this may damage unit base. The unit must be stored on a flat, level surface. Protect the condenser coil because it is easily damaged.

PRODUCT DESIGN

ROOF CURB INSTALLATIONS ONLY:

Curb installations must comply with local codes and should be done in accordance with the established guidelines of the National Roofing Contractors Association.

Proper unit installation requires that the roof curb be firmly and permanently attached to the roof structure. Check for adequate fastening method prior to setting the unit on the curb.

Full perimeter roof curbs are available from the factory and are shipped unassembled. Field assembly, squaring, leveling and mounting on the roof structure are the responsibility of the installing contractor. All required hardware necessary for the assembly of the sheet metal curb is included in the curb accessory.

WARNING

TO PREVENT POSSIBLE EQUIPMENT DAMAGE, PROPERTY DAMAGE, PERSONAL INJURY OR DEATH, THE FOLLOWING BULLET POINTS MUST BE OBSERVED WHEN INSTALLING THE UNIT.

- Sufficient structural support must be determined prior to locating and mounting the curb and package unit.
- Ductwork must be constructed using industry guidelines. The duct work must be placed into the roof curb before mounting the package unit. Our full perimeter curbs include duct connection frames to be assembled with the curb. Cantilevered type curbs are not available from the factory.
- Curb insulation, cant strips, flashing and general roofing material are furnished by the contractor.

The curbs must be supported on parallel sides by roof members. The roof members must not penetrate supply and return duct opening areas as damage to the unit might occur.

NOTE: The unit and curb accessories are designed to allow vertical duct installation before unit placement. Duct installation after unit placement is not recommended.

CAUTION

ALL CURBS LOOK SIMILAR. TO AVOID INCORRECT CURB POSITIONING, CHECK JOB PLANS CAREFULLY AND VERIFY MARKINGS ON CURB ASSEMBLY. INSTRUCTIONS MAY VARY IN CURB STYLES AND SUPERSEDES INFORMATION SHOWN.

See the manual shipped with the roof curb for assembly and installation instructions.

CLEARANCES

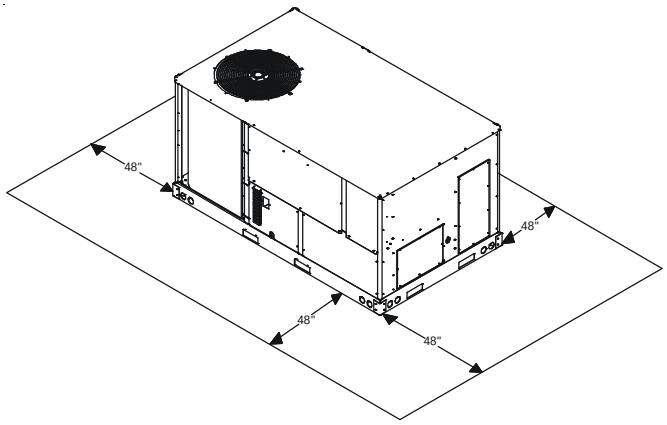

Unit Clearances

**In situations that have multiple units, a 48" minimum clearance is required between the condenser coils.*

Maintain an adequate clearance around the unit for safety, service, maintenance, and proper unit operation. Leave a clearance of 48" on all sides of the unit for possible compressor removal or service access, and to ensure proper ventilation and condenser airflow. Do not install the unit beneath any obstruction. Install the unit away from all building exhausts toinhibit ingestion of exhaust air into the unit's fresh-air intake.

NOTE: If the 48" minimum is used on the control panel side of a DCG unit, a flue extension (MF# 22-GX-01) needs to be installed to prevent flue gas recirculation.

PROTRUSION

Inspect curb to ensure that none of the utility services (electric) routed through the curb protrude above the curb.

ELECTRICAL WIRING

WARNING

HIGH VOLTAGE!
DISCONNECT ALL POWER BEFORE SERVICING OR INSTALLING THIS UNIT. MULTIPLE POWER SOURCES MAY BE PRESENT. FAILURE TO DO SO MAY CAUSE PROPERTY DAMAGE, PERSONAL INJURY OR DEATH.

WARNING

HIGH VOLTAGE!
TO AVOID PERSONAL INJURY OR DEATH DUE TO ELECTRICAL SHOCK, DO NOT TAMPER WITH FACTORY WIRING. THE INTERNAL POWER AND CONTROL WIRING OF THESE UNITS ARE FACTORY-INSTALLED AND HAVE BEEN THOROUGHLY TESTED PRIOR TO SHIPMENT. CONTACT YOUR LOCAL REPRESENTATIVE IF ASSISTANCE IS REQUIRED.

PRODUCT DESIGN

CAUTION

TO PREVENT DAMAGE TO THE WIRING, PROTECT WIRING FROM SHARP EDGES. FOLLOW NATIONAL ELECTRICAL CODE AND ALL LOCAL CODES AND ORDINANCES. DO NOT ROUTE WIRES THROUGH REMOVABLE ACCESS PANELS.

CAUTION

CONDUIT AND FITTINGS MUST BE WEATHER-TIGHT TO PREVENT WATER ENTRY INTO THE BUILDING.

For unit protection, use a fuse or HACR circuit breaker that is in excess of the circuit ampacity, but less than or equal to the maximum overcurrent protection device. DO NOT EXCEED THE MAXIMUM OVERCURRENT DEVICE SIZE SHOWN ON UNIT DATA PLATE.

All line voltage connections must be made through weatherproof fittings. All exterior power supply and ground wiring must be in approved weatherproof conduit.

The main power supply wiring to the unit and low voltage wiring to accessory controls must be done in accordance with these instructions, the latest edition of the National Electrical Code (ANSI/NFPA 70), and all local codes and ordinances. All field wiring shall conform with the temperature limitations for Type T wire (63°F/35°C rise).

The unit is factory wired for the voltage shown on the unit's data plate. Refer to model nomenclature in Appendix B for voltage requirement for your unit.

NOTE: If supply voltage is 208V, lead on primary of transformer must be moved from the 230V to the 208V tap. Refer to wiring diagram on unit for details.

Main power wiring should be sized for the minimum wire ampacity shown on the unit's database. Size wires in accordance with the ampacity tables in Article 310 of the National Electrical Code. If long wires are required, it may be necessary to increase the wire size to prevent excessive voltage drop. Wires should be sized for a maximum of 3% voltage drop.

CAUTION

TO AVOID PROPERTY DAMAGE OR PERSONAL INJURY DUE TO FIRE, USE ONLY COPPER CONDUCTORS.

CAUTION

TO PREVENT IMPROPER AND DANGEROUS OPERATION DUE TO WIRING ERRORS, LABEL ALL WIRES PRIOR TO DISCONNECTION WHEN SERVICING CONTROLS. VERIFY PROPER OPERATION AFTER SERVICING.

NOTE: A weather-tight disconnect switch, properly sized for the unit total load, must be field or factory installed. An external field supplied disconnect may be mounted on the exterior panel.

Ensure the data plate is not covered by the field-supplied disconnect switch.

- Some disconnect switches are not fused. Protect the power leads at the point of distribution in accordance with the unit data plate.
- The unit must be electrically grounded in accordance with local codes or, in the absence of local codes, with the latest edition of the National Electrical Code (ANSI-NFPA 70). A ground lug is provided for this purpose. Size grounding conductor in accordance with Table 250-95 of the National Electrical Code. Do not use the ground lug for connecting a neutral conductor.
- Connect power wiring to the compressor contactor closest to the entrance located within the main control box or to electrical power block, if equipped.

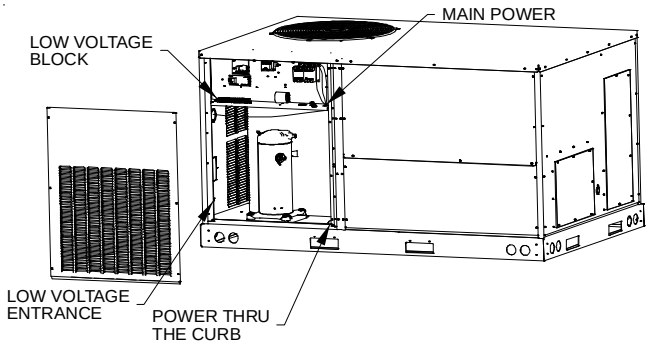

Power and Low Voltage Block Connections

WARNING

FAILURE OF UNIT DUE TO OPERATION ON IMPROPER LINE VOLTAGE OR WITH EXCESSIVE PHASE UNBALANCE CONSTITUTES PRODUCT ABUSE AND MAY CAUSE SEVERE DAMAGE TO THE UNIT ELECTRICAL COMPONENTS.

AREAS WITHOUT CONVENIENCE OUTLET

It is recommended that an independent 115V power source be brought to the vicinity of the roof top unit for portable lights and tools used by the service mechanic.

NOTE: Refer to local codes for requirements. These outlets can also be factory installed.

UNITS INSTALLED ON ROOF TOPS

Main power and low voltage wiring may enter the unit through the condenser end of unit or through the roof curb. Install conduit connectors at the desired entrance locations. Exter-

nal connectors must be weatherproof. All holes in the unit base must be sealed (including those around conduit nuts) to prevent water leakage into building. All required conduit and fittings are to be field supplied.

Supply voltage to roof top unit must not vary by more than 10% of the value indicated on the unit data plate. Phase voltage unbalance must not exceed 2%. Contact your local power company for correction of improper voltage or phase unbalance.

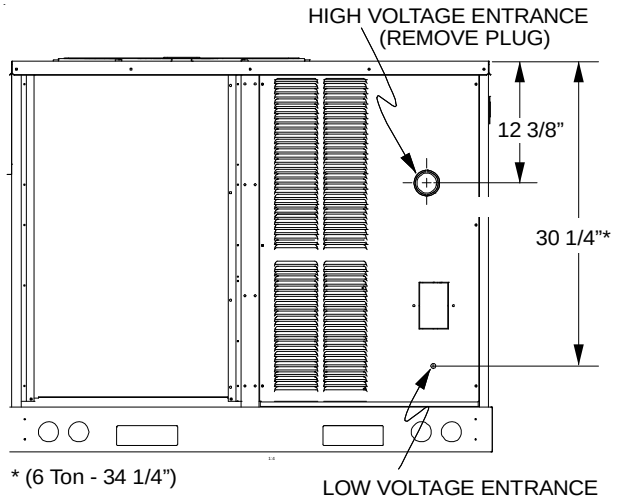

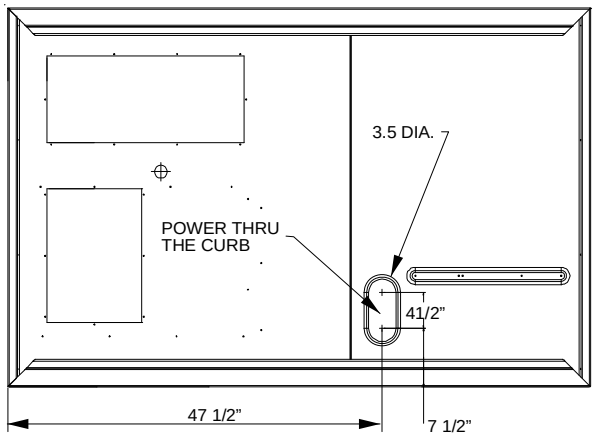

Electrical Entrance and Thru Curb

Unit is equipped with a Low Voltage Terminal Block and has Single Point wiring to the contactor or power block, if equipped.

Low Voltage Control Wiring

1. A 24V thermostat must be installed for unit operation. It may be purchased with the unit or field -supplied. Thermostats may be programmable or electromechanical as required.
2. Locate thermostat or remote sensor in the conditioned space where it will sense average temperature. Do not locate the device where it may be directly exposed to supply air, sunlight or other sources of heat. Follow installation instructions packaged with the thermostat.
3. Use #18 AWG wire for 24V control wiring runs not exceeding 75 feet. Use #16 AWG wire for 24V control wiring runs not exceeding 125 feet. Use #14 AWG wire for 24V control wiring runs not exceeding 200 feet. Low voltage wiring may be National Electrical Code (NEC) Class 2 where permitted by local codes.
4. Route thermostat wires from sub-base terminals to the unit. Control wiring should enter through the condenser panel opening or through curb indicated in "Electrical Entrance" figure. Connect thermostat and any accessory wiring to low voltage terminal block TB1 in the main control box.

NOTE: Field-supplied conduit may need to be installed depending on unit/curb configuration. Use #18 AWG solid conductor wire whenever connecting thermostat wires to terminals on sub-base. DO NOT use larger than #18 AWG wire. A transition to #18 AWG wire may be required before entering thermostat sub-base.

NOTE: Refer to unit wiring diagrams for thermostat hookups.

SYSTEM OPERATION

FOR YOUR SAFETY READ BEFORE OPERATING

WARNING If you do not follow these instructions exactly, a fire or explosion may result causing property damage, personal injury or loss of life.

A. This appliance does not have a pilot. It is equipped with an ignition device which automatically lights the burners. Do not try to light the burners by hand.

B. BEFORE OPERATING smell around the appliance area for gas. Be sure to smell next to the floor because some gas is heavier than air and will settle on the floor.

WHAT TO DO IF YOU SMELL GAS

- Do not try to light any appliance.
- Do not touch any electric switch; do not use any telephone in your building.
- Immediately call your supplier from a neighbor's phone. Follow the gas suppliers instructions.
- If you cannot reach your gas supplier, call the fire department.

C. Use only your hand to move the gas control switch or knob. Never use tools. If the gas control switch or knob will not operate, don't try to repair it, call a qualified service technician. Force or attempted repair may result in a fire or explosion.

D. Do not use this appliance if any part has been under water. Immediately call a qualified service technician to inspect the appliance and to replace any part of the control system and any gas control which has been under water.

WARNING: Improper installation, adjustment, alteration, service or maintenance can cause injury or property damage. Refer to the user's information manual provided with this furnace. For assistance or additional information consult a qualified installer, service agency or the gas supplier.

This furnace must be installed in accordance with the manufacturers instructions and local codes. In the absence of local codes, follow the National Fuel Gas Code, ANSI Z223.1.

OPERATING INSTRUCTIONS

1. STOP! Read the safety information above on this label.
2. Set the thermostat to lowest setting.
3. Turn off all electric power to the appliance.
4. This appliance is equipped with an automatic ignition system which automatically lights the burners. Do not try to light the burners by hand.
5. Remove control access panel.
6. Move the gas control switch or knob to "OFF".

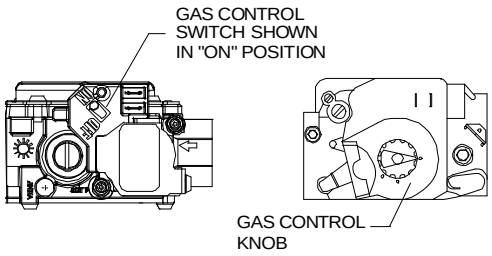

7. Wait five (5) minutes to clear out any gas. If you then smell gas, STOP! Follow "B" in the safety information above on this label. If you don't smell gas, go to the next step.
8. Move the gas control switch or knob to "ON".
9. Replace control access panel.
10. Turn on all electric power to the appliance.
11. Set the thermostat to the desired setting.
12. If the appliance will not operate, follow the instructions "To Turn Off Gas To Appliance" and call your service technician or gas supplier.

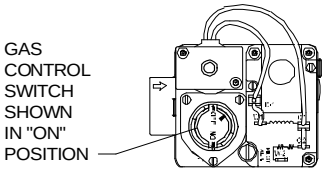

For outdoor installation only.

WARNING: If not installed, operated and maintained in accordance with the manufacturer's instructions, this product could expose you to substances in fuel combustion which can cause death or serious illness and which are known to the State of California to cause cancer, birth defects or other reproductive harm. This product contains fiberglass insulation. Fiberglass insulation contains a chemical known by the State of California to cause cancer.

TO TURN OFF GAS TO APPLIANCE

1. Set the thermostat to its lowest setting.
2. Turn off all electric power to the appliance if service is to be performed.
3. Remove control access panel.
4. Move the gas control switch or knob to "OFF". Do not force.
5. Replace control access panel.

FOR YOUR SAFETY Do not store or use gasoline or other flammable vapors and liquids in the vicinity of this or any other appliance.

B14933-239

Typical Package Cooling or Package Gas

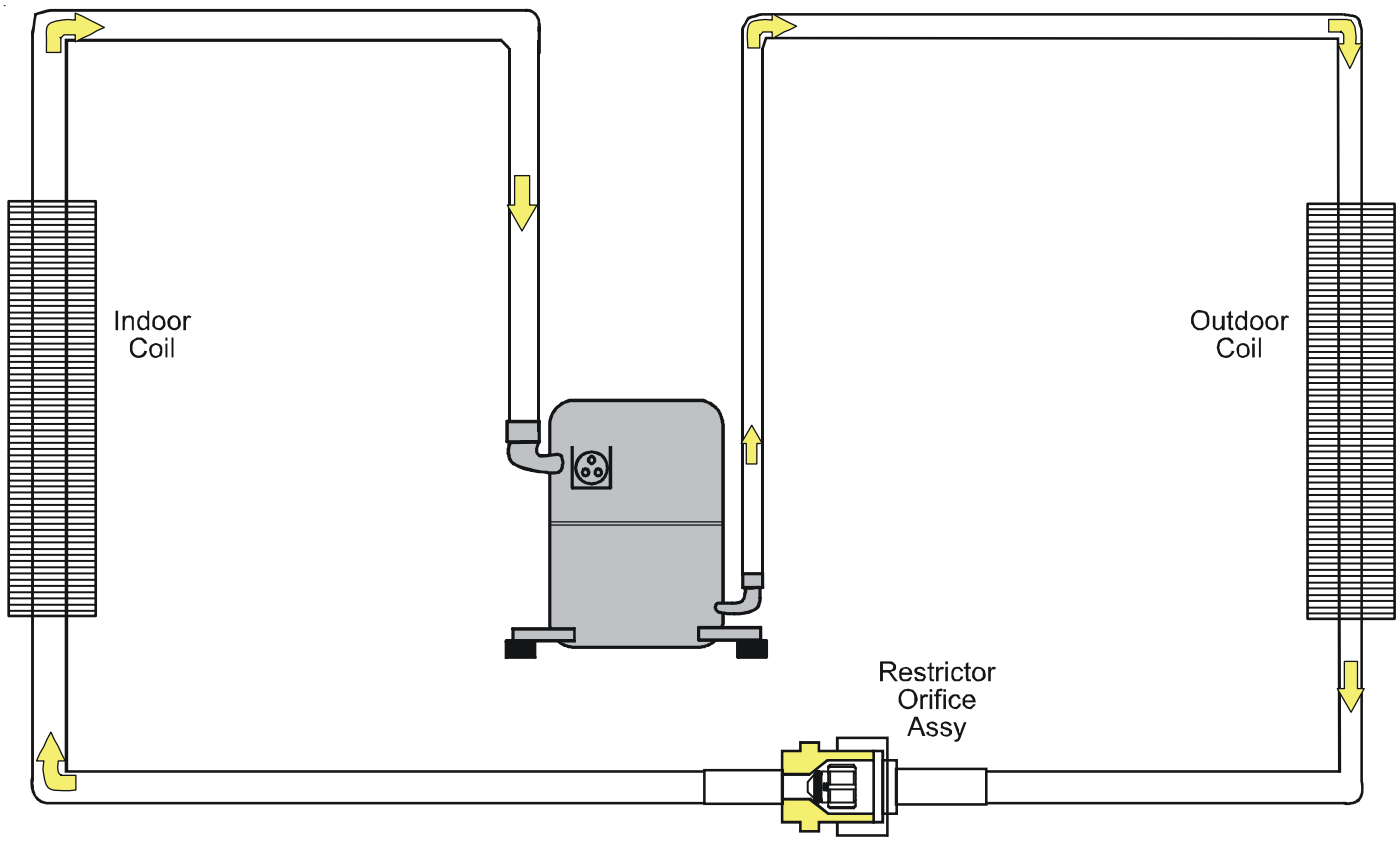

Either a thermostatic expansion valve or restrictor orifice assembly may be used depending on model. Refer to the parts catalog for the model being serviced.

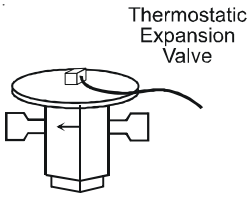

Restrictor Orifice Assembly in Cooling Operation

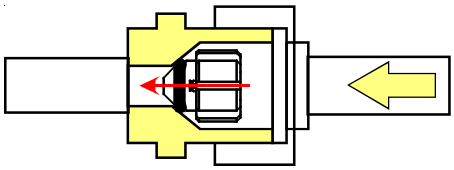

In the cooling mode the orifice is pushed into its seat forcing refrigerant to flow through the metered hole in the center of the orifice.

SYSTEM OPERATION

DCH*XXX**XXX**

Typical Heat Pump System in Cooling

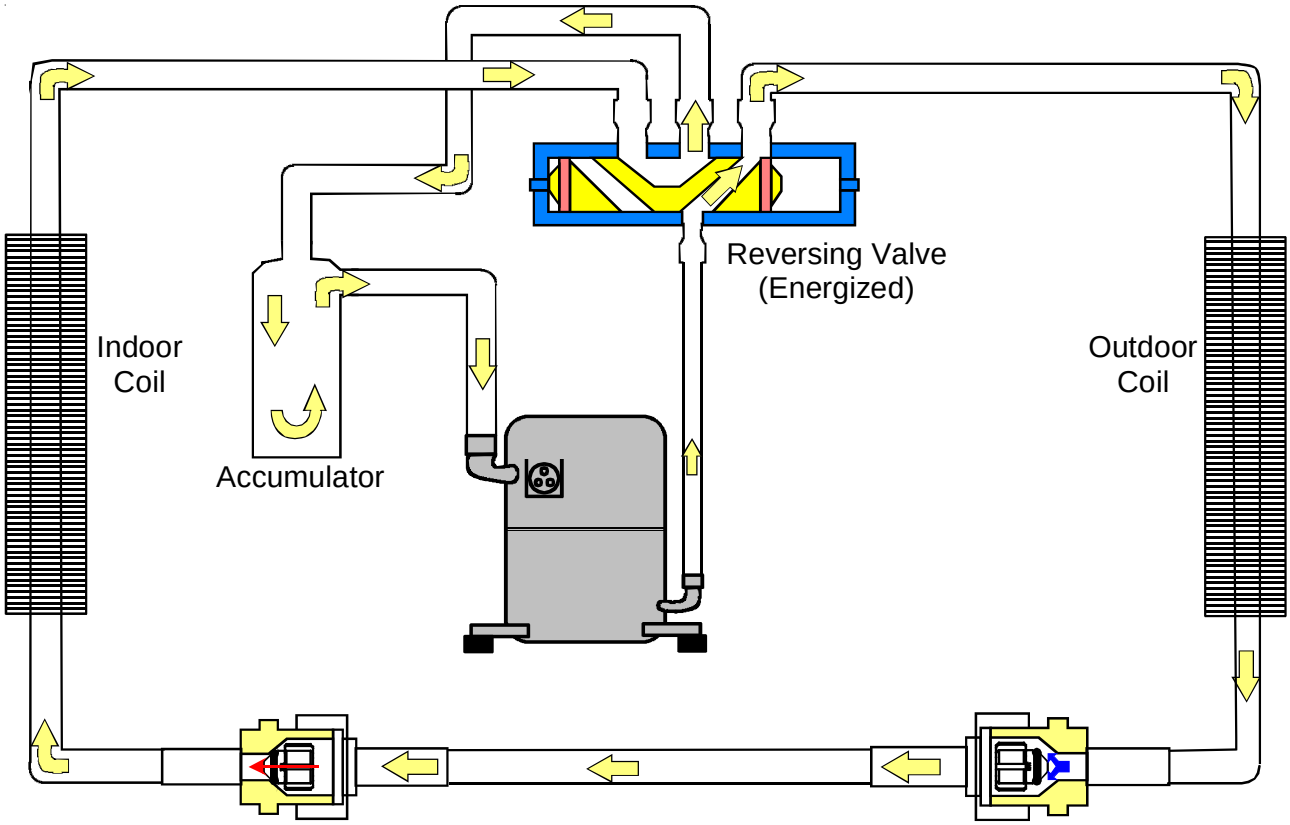

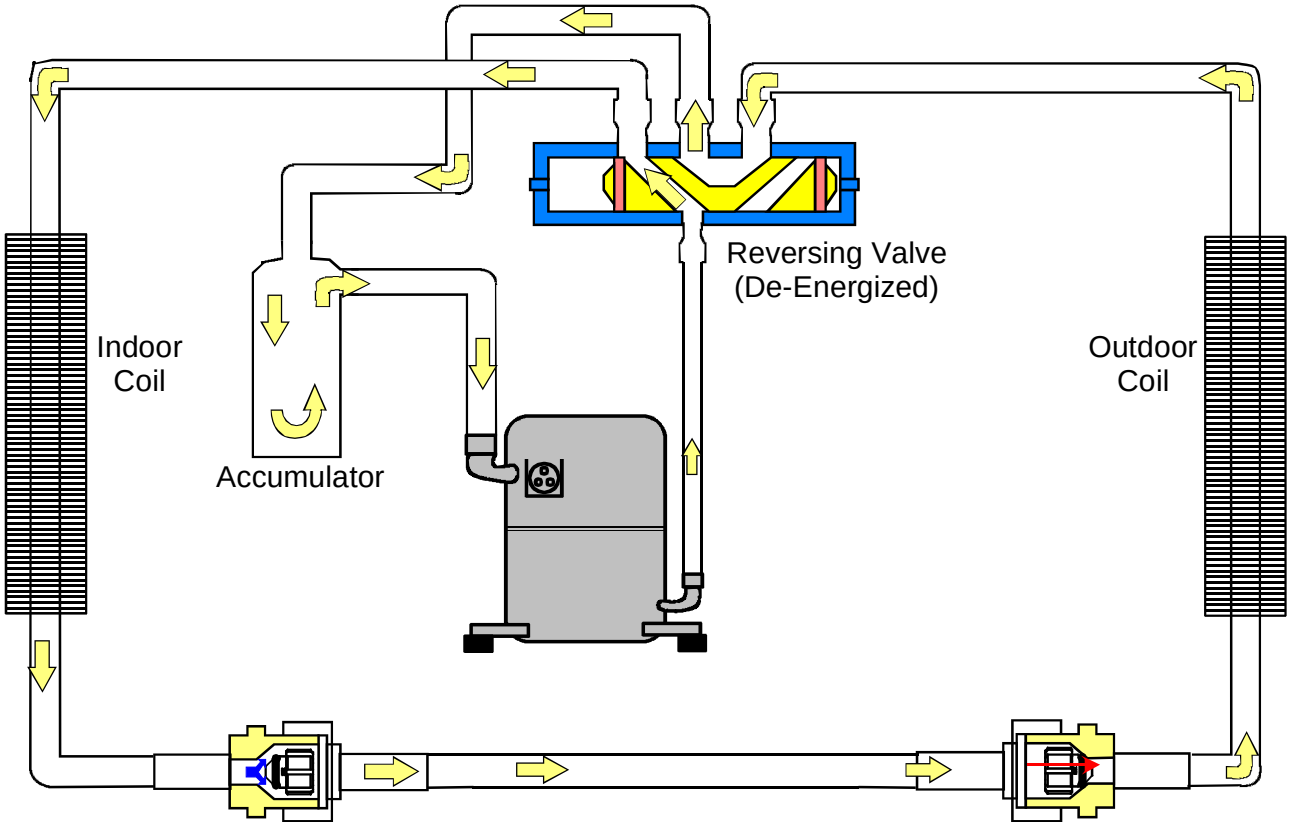

SYSTEM OPERATION

Direct Spark Ignition (DSI) Systems

DCG units are equipped with a direct spark ignition system. Ignition is provided by 22,000 volt electronic spark. A flame sensor then monitors for the presence of flame and closes the gas valve if flame is lost.

The system may be controlled by most good heating and cooling thermostats with an adjustable heat anticipator.

NOTE: Some night setback thermostats that do not have a common terminal use a power robbing circuit in the off cycle to maintain the batteries. This type of thermostat may interfere with the operation of the ignition control module and should not be used.

WARNING

HIGH VOLTAGE!
Disconnect ALL power before servicing or installing this unit. Multiple power sources may be present. Failure to do so may cause property damage, personal injury or death.

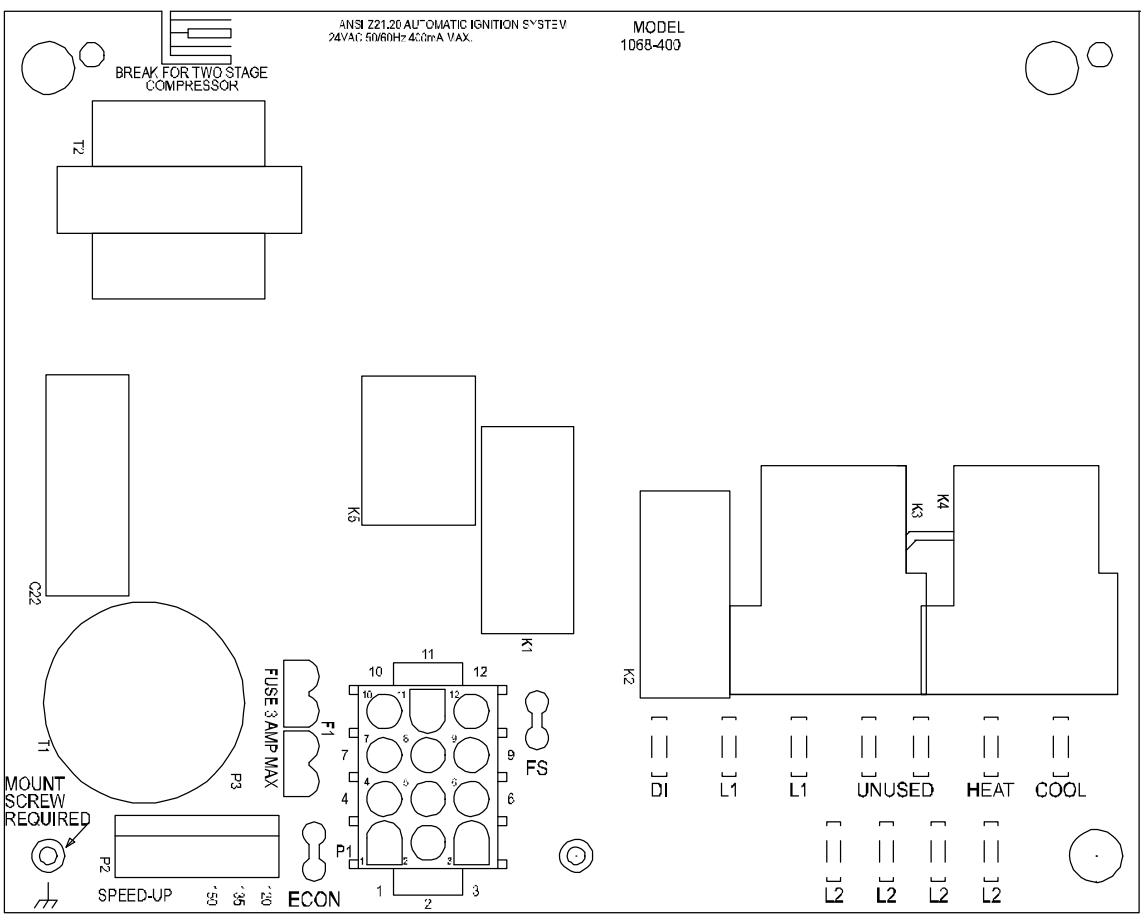

SYSTEM OPERATION

GAS SUPPLY PIPING

WARNING

TO PREVENT PERSONAL INJURY OR DEATH DUE TO IMPROPER INSTALLATION, ADJUSTMENT, ALTERATION, SERVICE OR MAINTENANCE, REFER TO THIS MANUAL. FOR ADDITIONAL ASSISTANCE OR INFORMATION, CONSULT A QUALIFIED INSTALLER, SERVICE AGENCY OR THE GAS SUPPLIER.

IMPORTANT NOTE: This unit is factory set to operate on natural gas at the altitudes shown on the rating plate.

WARNING

TO AVOID PROPERTY DAMAGE, PERSONAL INJURY OR DEATH WHEN EITHER USING PROPANE GAS ALONE OR AT HIGHER ALTITUDES, OBTAIN AND INSTALL THE PROPER CONVERSION KIT(S). FAILURE TO DO SO CAN RESULT IN UNSATISFACTORY OPERATION AND/OR EQUIPMENT DAMAGE. HIGH ALTITUDE KITS ARE FOR U.S. INSTALLATIONS ONLY AND ARE NOT APPROVED FOR USE IN CANADA.

The rating plate is stamped with the model number, type of gas and gas input rating. Make sure the unit is equipped to operate on the type of gas available. Conversion to propane (LP) gas is permitted with the use of the factory authorized conversion kit (see the unit Spec Sheet Manual for the appropriate kit). For High Altitude derates, refer to the latest edition of the National Fuel Gas Code NFPA 54/ANSI Z223.1.

INLET GAS PRESSURE	
NATURAL	Min. 5.0" W.C., Max. 10.0" W.C.
PROPANE	Min. 11.0" W.C., Max. 14.0" W.C.

Inlet Gas Pressure Must Not Exceed the Maximum Value Shown in Table Above.

The minimum supply pressure should not vary from that shown in the table above because this could prevent the unit from having dependable ignition. In addition, gas input to the burners must not exceed the rated input shown on the rating plate. Overfiring of the unit could result in premature heat exchanger failure.

PIPING

IMPORTANT NOTE: To avoid possible unsatisfactory operation or equipment damage due to under firing of equipment, do not undersize the natural/propane gas piping from the meter/tank to the unit. When sizing a trunk line, include all appliances on that line that could be operated simultaneously.

The rating plate is stamped with the model number, type of gas and gas input rating. Make sure the unit is equipped to operate on the type of gas available. The gas line installation must comply with local codes, or in the absence of local codes, with the latest edition of the National Fuel Gas Code NFPA 54/ANSI Z223.1.

Natural Gas Connection

Natural Gas Capacity of Pipe in Cubic Feet of Gas Per Hour (CFH)					
Length of Pipe in Feet	Nominal Black Pipe Size (inches)				
	1/2	3/4	1	1 1/4	1 1 /2
10	132	278	520	1050	1600
20	92	190	350	730	1100
30	73	152	285	590	980
40	63	130	245	500	760
50	56	115	215	440	670
60	50	105	195	400	610
70	46	96	180	370	560
80	43	90	170	350	530
90	40	84	160	320	490
100	38	79	150	305	460

Pressure= .50 PSIG or less and Pressure Drop of 0.3" W.C.
(Based on 0.60 Specific Gravity Gas)

$$\text{CFH} = \frac{\text{BTUH Furnace Input}}{\text{Heating Value of Gas (BTU/Cubic Foot}}$$

Refer to the Proper Piping Practice drawing for the general layout at the unit. The following rules apply:

1. Use black iron pipe and fittings for the supply piping. The use of a flex connector and/or copper piping is permitted as long as it is in agreement with local codes.
2. Use pipe joint compound on male threads only. Pipe joint compound must be resistant to the action of the fuel used.
3. Use ground joint unions.
4. Install a drip leg to trap dirt and moisture before it can enter the gas valve. The drip leg must be a minimum of three inches long.
5. Use two pipe wrenches when making connection to the gas valve to keep it from turning.
6. Install a manual shut-off valve in a convenient location (within six feet of unit) between the meter and the unit.
7. Tighten all joints securely.
8. The unit must be connected to the building piping by one of the following methods:

- Rigid metallic pipe and fittings
- Semirigid metallic tubing and metallic fittings (Aluminum alloy tubing must not be used in exterior locations)
  - Listed gas appliance connectors used in accordance with the terms of their listing that are completely in the same room as the equipment
  - In the prior two methods above the connector or tubing must be protected from physical and thermal damage. Aluminum alloy tubing and connectors must be coated to protect against external corrosion when in contact with masonry, plaster or insulation or are subject to repeated wettings by liquids (water - not rain water, detergents or sewage).

SYSTEM OPERATION

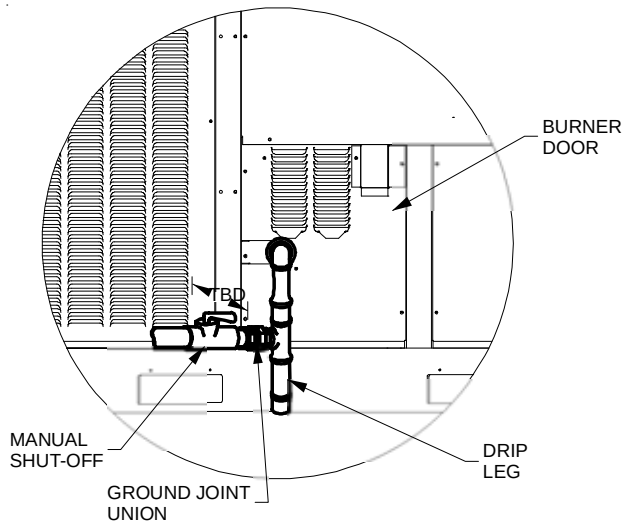

Proper Piping Practice

NOTE: The unit gas supply entrance is factory sealed with plugs. Keep plugs in place until gas supply is ready to be installed. Once ready, replace the plugs with the supplied grommets and install gas supply line.

Gas Piping Checks

CAUTION

To prevent property damage or personal injury due to fire, the following instructions must be performed regarding gas connections and pressure testing:

- The unit and its gas connections must be leak tested before placing in operation. Because of the danger of explosion or fire, never use a match or open flame to test for leaks. Never exceed specified pressures for testing. Higher pressure may damage gas valve and cause overfiring which may result in premature heat exchange failure.
- This unit and its shut-off valve must be disconnected from the gas supply during any pressure testing of that system at test pressures in excess of 1/2 PSIG (3.48 kPa).
- This unit must be isolated from the gas supply system by closing its manual shut-off valve during any pressure testing of the gas supply piping system at test pressures equal to or less than 1/2 PSIG (3.48 kPa).

WARNING

To avoid property damage or personal injury, be sure there is no open flame in the vicinity during air bleeding.

There will be air in the gas supply line after testing for leaks on a new installation. Therefore, the air must be bled from the line by loosening the ground joint union until pure gas is expelled. Tighten union and wait for five minutes until all gas has been dissipated in the air. Be certain there is no open flame in the vicinity during air bleeding procedure. The unit is placed in operation by closing the main electrical disconnect switch for the unit.

PROPANE GAS INSTALLATIONS

WARNING

To avoid property damage, personal injury or death due to fire or explosion caused by a propane gas leak, install a gas detecting warning device. Since rust can reduce the level of odorant in propane gas, a gas detecting warning device is the only reliable way to detect a propane gas leak. Contact a local propane gas supplier about installing a gas detecting warning device.

IMPORTANT NOTE: Propane gas conversion kits must be installed to convert units to propane gas. NOx screens must be removed before converting to LP. Remove burner assembly and pull NOx screens from each burner tube. When all the screens are out, reassemble the burner assembly without the screens.

All propane gas equipment must conform to the safety standards of the National Board of Fire Underwriters (See NBFU Manual 58).

For satisfactory operation, propane gas supply pressure must be within 9.7 - 10.3 inches W.C. at the manifold with all gas appliances in operation. Maintaining proper gas pressure depends on three main factors:

1. Vaporization rate, which depends on (a) temperature of the liquid, and (b) wetted surface area of the container or containers.
2. Proper pressure regulation.
3. Pressure drop in lines between regulators, and between second stage regulator and the appliance. Pipe size required will depend on length of pipe run and total load of all appliances.

SYSTEM OPERATION

TYPICAL PROPANE PIPING

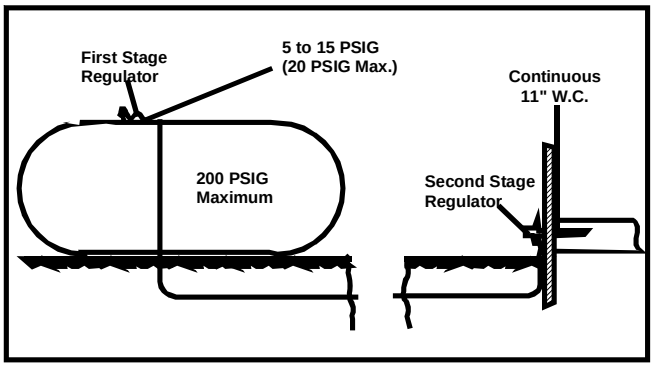

WARNING

Although the unit itself cannot be installed in an excavated or confined space, the gas piping may be routed through such areas and we strongly recommend that you contact your propane supplier about installing a gas detecting warning device that would alert you to a gas leak.

- **Propane gas is heavier than air and any leaking gas can settle in any low areas or confined spaces.**
- **Propane gas odorant may fade, making the gas undetectable except with a warning device.**

An undetected gas leak will create a danger of explosion or fire. If you suspect the presence of gas, follow the instructions on page 9. Failure to do so could result in serious personal injury or death.

PROPANE TANK SIZING (MINIMUM)

MAXIMUM GAS NEEDED TO VAPORIZE*	TANK SIZE REQUIRED IF LOWEST OUTDOOR TEMPERATURE (AVG. FOR 24 HOURS) REACHES						
	32°F	20°F	10°F	0°F	-10°F	-20°F	-30°F
125K BTU/HR (50 CFH)	115 GAL	115 GAL	115 GAL	250 GAL	250 GAL	400 GAL	600 GAL
250K BTU/HR (100 CFH)	250 GAL	250 GAL	250 GAL	400 GAL	500 GAL	1000 GAL	1500 GAL
375K BTU/HR (150 CFH)	300 GAL	400 GAL	500 GAL	500 GAL	1000 GAL	1500 GAL	2500 GAL
500K BTU/HR (200 CFH)	400 GAL	500 GAL	750 GAL	1000 GAL	1500 GAL	2000 GAL	3500 GAL
750K BTU/HR (300 CFH)	750 GAL	1000 GAL	1500 GAL	2000 GAL	2500 GAL	4000 GAL	5000 GAL

* AVERAGE RATE/HOUR WITHDRAWL IN 8 HOUR PERIOD

PROPANE GAS PIPING CHARTS

Sizing Between First and Second Stage Regulator
Maximum Propane Capacities listed are based on 1 PSIG Pressure Drop at 10 PSIG Setting. Capacities in 1,000 BTU/HR

PIPE OR TUBING LENGTH, FEET	TUBING SIZE, O.D., TYPE L					NOMINAL PIPE SIZE, SCHEDULE 40	
	3/8"	1/2"	5/8"	3/4"	7/8"	1/2"	3/4"
30	309	700	1,303	2,205	3,394	1,843	3,854
40	265	599	1,115	1,887	2,904	1,577	3,298
50	235	531	988	1,672	2,574	1,398	2,923
60	213	481	896	1,515	2,332	1,267	2,649
70	196	446	824	1,394	2,146	1,165	2,437
80	182	412	767	1,297	1,996	1,084	2,267
90	171	386	719	1,217	1,873	1,017	2,127
100	161	365	679	1,149	1,769	961	2,009
150	130	293	546	923	1,421	772	1,613
200	111	251	467	790	1,216	660	1,381
250	90	222	414	700	1,078	585	1,224
300	89	201	378	634	976	530	1,109
350	82	185	345	584	898	488	1,020
400	76	172	321	543	836	454	949

To convert to Capacities at 15 PSIG Settings -- Multiply by 1.130
To convert to Capacities at 5 PSIG Settings -- Multiply by 0.879

Sizing Between Single or Second Stage Regulator and Appliance*
Maximum Propane Capacities Listed are Based on 1/2" W.C. Pressure Drop at 11" W.C. Setting. Capacities in 1,000 BTU/HR

PIPE OR TUBING LENGTH, FEET	TUBING SIZE, O.D., TYPE L					NOMINAL PIPE SIZE, SCHEDULE 40				
	3/8"	1/2"	5/8"	3/4"	7/8"	1/2"	3/4"	1"	1-1/4"	1-1/2"
10	49	110	206	348	539	291	608	1,146	2,353	3,525
20	34	76	141	239	368	200	418	788	1,617	2,423
30	27	61	114	192	296	161	336	632	1,299	1,946
40	23	52	97	164	253	137	284	541	1,111	1,665
50	20	46	86	146	224	122	255	480	985	1,476
60	19	42	78	132	203	110	231	436	892	1,337
80	16	36	67	113	174	94	198	372	764	1,144
100	14	32	59	100	154	84	175	330	677	1,014
125	12	28	52	89	137	74	155	292	600	899
150	11	26	48	80	124	67	141	265	544	815
200	10	22	41	69	106	58	120	227	465	697
250	9	19	36	61	94	51	107	201	412	618
300	8	18	33	55	85	46	97	182	374	560
350	7	16	30	51	78	43	89	167	344	515
400	7	15	28	47	73	40	83	156	320	479

*DATA IN ACCORDANCE WITH NFPA PAMPHLET NO. 54

SYSTEM OPERATION

Roof Top Location and Installation

The gas supply piping location and installation for roof top units must be in accordance with local codes or, in the absence of locals codes, with ordinances of the latest edition of the National Fuel Gas Code (ANSI Z223.1).

A manual gas shut off valve must be field installed external to the roof top unit. In addition, a drip leg must be installed near the inlet connection. A ground joint union connection is required between the external shut off valve and the unit connection to the gas valve to permit removal of the burner assembly for servicing.

1. Route gas piping to unit so that it does not interfere with the removal of access panels. Support and align piping to prevent strains or misalignment of the manifold assembly.
2. All units are furnished with standard female NPT pipe connections. Connection pipe sizes for DCG036 through 072 units is 1/2" NPT on 045 to 140 mBH units. The size of the gas supply piping to the unit must be based on length of run, number of units on the system, gas characteristics, BTU requirement and available supply pressure. All piping must be done in accordance with local codes or, in the absence of local codes, with the latest edition of the National Fuel Gas Code (ANSI Z223.1).

   NOTE: The gas connection size at the unit does NOT establish the size of the supply line.
3. These units are designed for either natural or propane (LP) gas and are specifically constructed at the factory for only one of these fuels. The fuels are NOT interchangeable. However, the furnace can be converted in the field from natural gas to LP gas with the appropriate factory kit (see unit Spec Sheet Manual for the appropriate kit). Only a qualified contractor, experienced with natural and propane gas systems, should attempt conversion. Kit instructions must be followed closely to assure safe and reliable unit operation.
4. With all units on a common line operating under full fire, natural gas main supply pressure should be adjusted to approximately 7.0" w.c., measured at the unit gas valve. If the gas pressure at the unit is greater than 10.5" w.c., the contractor must furnish and install an external type positive shut off service pressure regulator. The unit will not function satisfactorily if supply gas pressure is less than 5.5" w.c. or greater than 10.5" w.c..

   NOTE: A minimum horizontal distance of 48" between the regulator and the furnace flue discharge is required.
5. With all units on a common line operating under full LP gas main supply pressure should be at least 11.0" w.c. and must be no greater than 13.0" w.c., measured at the unit gas valve. Unit will not function satisfactorily if supply gas pressure is less than 11.0" w.c. or greater than 13.0" w.c..
6. All pipe connections should be sealed with a pipe thread compound, which is resistant to the fuel used with the furnace. A soapy water solution should be used to check all joints for leaks. A tap is located on the entering side of the gas valve for test gauge connection to measure supply (main) gas pressure. Another tap is provided on the manifold side of the gas valve for checking manifold pressure.

WARNING

THIS UNIT AND ITS INDIVIDUAL SHUTOFF VALVE MUST BE DISCONNECTED FROM THE GAS SUPPLY SYSTEM DURING ANY PRESSURE TESTING OF THAT SYSTEM AT TEST PRESSURES IN EXCESS OF 1/2 PSIG (13.8" W.C.).

CAUTION

THIS UNIT MUST BE ISOLATED FROM THE GAS SUPPLY PIPING SYSTEM BY CLOSING ITS INDIVIDUAL MANUAL SHUTOFF VALVE DURING ANY PRESSURE TESTING EQUAL TO OR LESS THAN 1/2 PSIG.

7. There must be no obstruction to prevent the flow of combustion and ventilating air. A vent stack is not required and must never be used. The power venter will supply an adequate amount of combustion air as long as the air passageways are kept free of any obstructions and the recommended external unit clearances are maintained.

CIRCULATING AIR AND FILTERS

Ductwork

The supply duct from the unit through a wall may be installed without clearance. However, minimum unit clearances must be maintained (see "Clearances" section). The supply duct should be provided with an access panel large enough to inspect the air chamber downstream of the heat exchanger. A cover should be tightly attached to prevent air leaks.

Ductwork dimensions are shown in the roof curb installation manual.

If desired, supply and return duct connections to the unit may be made with flexible connections to reduce possible unit operating sound transmission.

VENTING

NOTE: Venting is self-contained.

SYSTEM OPERATION

CONDENSATE DRAIN CONNECTION

Condensate Drain Connection

A 3/4" female NPT drain connection is supplied on the end of the condensate pan, with an alternative connection on the bottom of the pan. An external trap must be installed for proper condensate drainage.

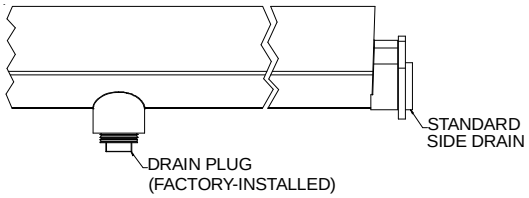

Drain Pan (Side View)

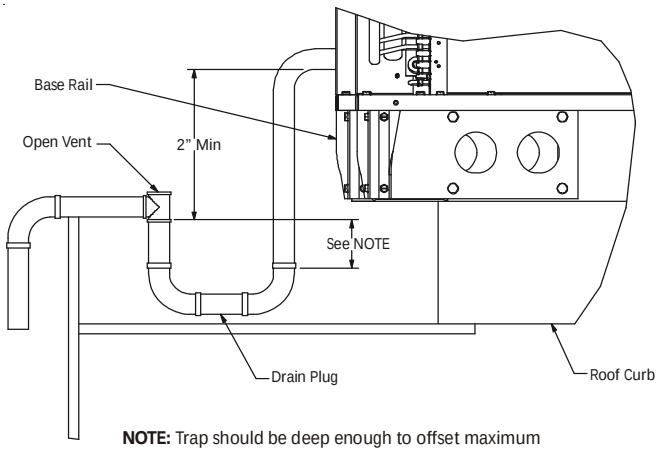

NOTE: Trap should be deep enough to offset maximum unit static difference. A minimum 4" trap is recommended.

Drain Connection

Install condensate drain trap as shown. Use 3/4" drain line and fittings or larger. Do not operate without trap.

Horizontal Drain

Drainage of condensate directly onto the roof may be acceptable (refer to local code). It is recommended that a small drip pad of either stone, mortar, wood or metal be provided to prevent any possible damage to the roof. When using the horizontal drain connection, check the drain plug in bottom connection to ensure it is tight.

Vertical Drain

To use the bottom drain connection, remove the drain plug from the bottom connection and install it in the horizontal connection.

Cleaning

Due to the fact that drain pans in any air conditioning unit will have some moisture in them, algae and fungus will grow due to airborne bacteria and spores. Periodic cleaning is necessary to prevent this build-up from plugging the drain. Cleaning agent must be clorine-free.

STARTUP, ADJUSTMENTS, AND CHECKS

WARNING

HIGH VOLTAGE!
To avoid personal injury or death due to electrical shock, bond the frame of this unit to the building electrical ground by use of the grounding terminal provided or other acceptable means. Disconnect all power before servicing or installing this unit.

CAUTION

To prevent property damage or personal injury, Do not start the unit until all necessary pre-checks and tests have been performed.

WARNING

MOVING MACHINERY HAZARD!
To prevent possible personal injury or death, disconnect power to the unit and padlock in the "OFF" position before servicng fans.

Contractor Responsibility

The installing contractor must be certain that:

- All supply and return air ductwork is in place, properly sealed, and corresponds with installation instructions.
- All thermostats are mounted and wired in accordance with installation instructions.
- All electric power, all gas, hot water or steam line connections, and the condensate drain installation have been made to each unit on the job. These main supply lines must be functional and capable of operating all units simultaneously.
- Requirements are met for venting and combustion air.
- Air filters are in place.
- Input rate and temperature rise are adjusted per rating plate.
- Return air temperature is maintained between 55°F (13°C) and 80°F (27°C).

Roof Curb Installation Check

Inspect the roof curb for correct installation. The unit and curb assembly should be level. Inspect the flashing of the roof mounting curb to the roof, especially at the corners, for good workmanship. Also check for leaks around gaskets. Note any deficiencies in a separate report and forward to the contractor.

SYSTEM OPERATION

Obstructions, Fan Clearance and Wiring

Remove any extraneous construction and shipping materials that may be found during this procedure. Rotate all fans manually to check for proper clearances and that they rotate freely. Check for bolts and screws that may have jarred loose during shipment to the job site. Retighten if necessary. Re-tighten all electrical connections.

Field Duct Connections

Verify that all duct connections are tight and that there is no air bypass between supply and return.

Filter Section Check

Remove filter section access panels and check that filters are properly installed. Note airflow arrows on filter frames.

Pre-startup Precautions

Transformer and Induced Draft Motor

NOTE: On the 208/230 volt units only.

Ensure the transformer and induced draft motor are set on the appropriate voltage taps. Both the transformer tap and induced draft motor are set on 230v from the factory. To change the induced draft motor voltage, remove the black induced draft motor wire from the unused terminal on the ignition control board and swap it with the red wire coming from the induced draft motor.

It is important to your safety that the unit has been properly grounded during installation. Check ground lug connection in main control box for tightness prior to closing circuit breaker or disconnect switch. Verify that supply voltage on line side of disconnect agrees with voltage on unit identification plate.

System Voltage - That nominal voltage value assigned to a circuit or system for the purpose of designating its voltage class.

Nameplate Voltage - That voltage assigned to a piece of equipment for the purpose of designating its voltage class and for the purpose of defining the minimum and maximum voltage at which the equipment will operate.

AIR FLOW ADJUSTMENTS

NOTE: For 2 speed models, aiflow adjustmets must be made on high speed, i.e., 2nd stage cooling or in heat mode.

When the final adjustments are complete, the current draw of the motor should be checked and compared to the full load current rating of the motor. The amperage must not exceed the service factor stamped on the motor nameplate. The total airflow must not be less than that required for operation of the electric heaters or the furnace.

If an economizer is installed, check the unit operating balance with the economizer at full outside air and at minimum outside air.

NOTE: Airflow setting below 350 CFM/Ton is not recommended, as evaporator freezing or poor unit performance is possible.

PSC Motor

Adjust the CFM for the unit by changing the speed tap of the indoor blower motor at the heat or cool tap on the control board connection with the one of the speed taps on “M1” or “M2” (Black-High Speed, Blue-Medium Speed, Red-Low Speed).

EEM Motor

Adjust the CFM for the unit by changing the position of the low voltage leads on the motor terminal block. Green is for Fan Only. Yellow is for Cooling and Heat Pump Heating. **NOTE:** If more than one lead is energized simultaneously, the motor will run at the higher speed.

Set Evaporator Fan Rpm

Actual RPM’s must be set and verified with a tachometer or strobe light. Refer to Appendices A and B for basic unit fan RPM. Refer also to “Airflow” section of this manual. With disconnect switch open, disconnect thermostat wires from terminals Y and W. This will prevent heating and mechanical cooling from coming on. Place a jumper wire across terminals R and G at TB1 terminal block. Close disconnect switch; evaporator fan motor will operate so RPM can be checked.

For gas heat units, the airflow must be adjusted so that the air temperature rise falls within the ranges given stated on Data Plate.

Evaporator Fan Rotation Check (Three Phase Models Only)

Check that fan rotates clockwise when viewed from the drive side of unit and in accordance with rotation arrow shown on blower housing. If it does not, reverse any two incoming power cables at Single Point Power Block. In this case, repeat bearing check.

Do not attempt to change load side wiring. Internal wiring assures all motors and compressors will rotate in correct direction once evaporator fan motor rotation check has been made.

Electrical Input Check

Make preliminary check of evaporator fan ampere draw and verify that motor nameplate amps are not exceeded. A final check of amp draw should be made upon completion of air balancing of the duct system.

BELT DRIVE MODELS ONLY

The drive on the supply fan is typically set in the middle of the RPM range. The drive motor sheave pitch diameter is field adjustable for the required airflow.

Upon completion of the air flow balancing, we recommend replacing the variable pitched motor sheave with a properly-sized fixed sheave. A matching fixed sheave will provide

longer belt and bearing life and vibration free operation. Initially, it is best to have a variable pitched motor sheave for the purpose of airflow balancing, but once the balance has been achieved, fixed sheaves maintain alignment and minimize vibration more effectively. For direct drive units, move fan speed wire.

Bearing Check

Prior to energizing any fans, check and make sure that all setscrews are tight so that bearings are properly secured to shafts.

GAS SYSTEM

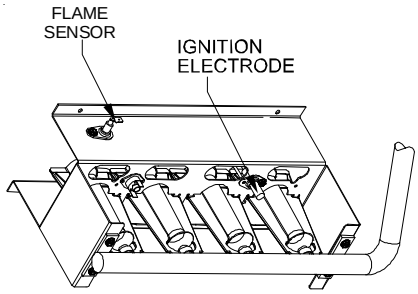

Flame Sensor and Ignition Electrode Location

MAXIMUM INPUT (BTUH)	NUMBER of BURNERS	MAXIMUM BTUH/BURNER	GAS ORIFICES	
			NATURAL (Dia)	PROPANE (LP) (Dia)
45,000	2	23,000	#43	#55
115,000	5	23,000	#43	#55
140,000	6	23,000	#43	#55
90,000	4	23,000	#43	#55

Heat Exchanger and Burner Orifice Specifications

NOTE: Gas appliances located more than 2000 feet above sea level must be derated 4% per 1000 feet of total elevation and that variance in gas heating value and specific gravity require change in manifold pressure to obtain rating, it is mandatory that the input be adjusted at the installation site. All installations should be made as outlined in the latest edition of the National Fuel Gas Code ANSI Z223.1,section “Procedures To Be Followed To Place An Appliance in Operation”. Refer also to the “User’s Information Manual” supplied with the unit for additional information on the gas furnace.

NORMAL SEQUENCE OF OPERATION

NOTE: The ignition control board blower off delay is factory set at 150 seconds. This factory setting can also be set to 120 or 135 seconds by placing the jumper on the desired setting.

Heating

This unit has one (RS) Manual Reset Limit Control Switch. Check the limit to make sure it has not tripped. The limit may arrive at the job site tripped as a result of shipping shock.

If the ventermotor comes on, but the unit does not attempt ignition, check if the ALS (Auxiliary High Limit Control Switch) requires resetting.

1. With electricity and gas turned on, the system switch in the “HEAT” or “AUTO” position and the fan switch in the “AUTO” position, the thermostat will close the circuit between unit terminals R and W (R-W) when the temperature falls below the thermostat setting.
2. D1 on IIC energizes relay IDMR.
3. Relay IDMR energizes the ventermotor IDM.
4. Operation of the ventermotor closes the pressure switch PS located in the burner compartment. Unless excessive temperatures or shipping shock have opened high limit control ALS, power is fed to the integrated ignition control, which then initiates a 15-second pre-purge time delay. During this period, the ventermotor will clear the combustion chamber of any residual gas.
5. After the pre-purge period, the ignition control energizes the WI-C gas valve and simultaneously initiates a “three (3)-try” spark ignition sequence.
6. When the burners are ignited, a minimum one (1) microamp DC current will flow through the flame between the sensor electrode and the grounded burner.
7. When the controller proves that the flame has been established, it will keep the gas valve energized and discontinue the ignition spark. High stage manifold pressure will be approximately 3.5" w.c. for natural gas and 10.0" w.c. for propane (LP). Low fire natural gas is 2.0” w.c.; low fire propane 6.0” w.c.
8. If the control is unable to ignite the burners after its initial attempt, it will initiate another purge and spark sequence. A third purge and spark sequence will be initiated if the second attempt is unsuccessful. If the third attempt is unsuccessful, the controller will close the gas valve and lock itself out. It may be reset by momentarily interrupting power. This may be accomplished by briefly lowering the room thermostat set-point below room temperature, or by shutting off the main power to the unit. (See TP-105 for more details.)
9. Integrated ignition control will close its normally open contacts after a delay of approximately 30 seconds. This action energizes contactor BC and starts the supply fan motor. Operation of the supply fan circulates air across the heat exchanger and delivers heated air to the conditioned space.

SYSTEM OPERATION

10. When the space temperature rises, the thermostat will open R-W. Opening R-W will cause the gas valve to close, and the furnace to shut down.
11. The furnace has three high temperature limit controls, which can shut down the burner. They do not shut down the ventermotor.

Unit Shutdown

1. Set the thermostat to lowest setting.
2. Turn off the electrical power supply to the unit.
3. Remove the heat exchanger door on the side of the unit by removing screws.
4. Move the gas control valve switch to the OFF position. Do not force.
5. Close manual gas shut off valve external to the unit.
6. Replace the heat exchanger door on the unit.
7. If cooling and/or air circulation will be desired, turn ON the electrical power.

Automatic Reset High Limit Control (LS)

Located in the burner compartment on the heat exchanger, its sensing element projects through the blower section bulkhead and senses the temperature at the rear of the furnace. It will cycle the furnace off if the temperature exceeds 100°F plus maximum rise.

Auxiliary High Limit Control (ALS)

Located in the blower compartment on the blower housing, it senses air temperature within the blower compartment and protects the filters from excessive temperature. It will shut down the furnace if it senses excessive temperatures.

Elevated temperatures at the control are normally caused by blower failure. The reason for the opening should be determined and repaired prior to resetting.

Manual Reset Flame Rollout Control (RS)

Located in the burner compartment at the top of the burner assembly, it senses high temperature that could occur if the heat exchanger tubes were plugged and the flame was rolling out instead of entering the tubes. It has a manual push-button reset that cannot be actuated until the limit control has cooled.

The reason for elevated temperatures at the control should be determined and repaired prior to resetting this manual reset control.

WARNING

To avoid property damage, personal injury or death due to fire or explosion, a qualified servicer must investigate the reason for the rollout protection device to open before manually resetting the rollout protection device.

NORMAL SEQUENCE OF OPERATION

Cooling

Begin with power turned off at all disconnects.

1. Turn thermostat system switch to “Cool,” and fan switch to “Auto” and turn temperature setting as high as it will go.
2. Inspect all registers and set them to the normal open position.
3. Turn on the electrical supply at the disconnect.
4. Turn the fan switch to the “ON” position. The blower should operate after a 7 second delay.
5. Turn the fan switch to “Auto” position. The blower should stop after a 65 second delay.
6. Slowly lower the cooling temperature until the unit starts. The compressor, blower and fan should now be operating. Allow the unit to run 10 minutes, make sure cool air is being supplied by the unit.
7. Turn the temperature setting to the highest position, stopping the unit. The indoor blower will continue to run for 65 seconds.
8. Turn the thermostat system switch to “OFF” and disconnect all power when servicing the unit.

WARNING

HIGH VOLTAGE!
Disconnect all power before servicing or installing this unit. Multiple power sources may be present. Failure to do so may cause property damage, personal injury or death.

Heat Pump

9. Check the cooling mode for the heat pump in the same manner as above. The reversing valve is energized when the thermostat is placed in the cooling position. A clicking sound should be noticeable from the reversing valve. By lowering the temperature setting to call for cooling, the contractor is energized. The compressor, blower and fan should then be running. After the cooling mode is checked out, turn the thermostat system switch to “OFF**”.**
10. Turn the thermostat system switch to “HEAT” and fan switch to “AUTO**”.**
11. Slowly raise the heating temperature setting. When the heating first stage makes contact, stop raising the temperature setting.. The compressor, blower and fan should now be running with the reversing valve in the de-energized (heating) position. After giving the unit time to settle out, make sure the unit is supplying heated air.

SYSTEM OPERATION

12. If the outdoor ambient is above 80°F, the unit may trip on its high pressure cut out when on heating. The compressor should stop. The heating cycle must be thoroughly checked, so postpone the test to another day when conditions are more suitable but-DO NOT FAIL TO TEST.

    If the outdoor ambient is low and the unit operates properly on the heating cycle, you may check the pressure cutout operation by blocking off the indoor return air until the unit trips.

13. If unit operates properly in the heating cycle, raise the temperature setting until the heating second stage makes contact. Supplemental resistance heat, if installed should now come on. Make sure it operates properly.

    NOTE: If outdoor thermostats are installed the outdoor ambient must be below the set point of these thermostats for the heaters to operate. It may be necessary to jumper these thermostats to check heater operation if outdoor ambient is mild.

14. For thermostats with emergency heat switch, return to step 11. The emergency heat switch is located at the bottom of the thermostat. Move the switch to emergency heat. The heat pump will stop, the blower will continue to run, all heaters will come on and the thermostat emergency heat light will come on.

15. If checking the unit in the wintertime, when the outdoor coil is cold enough to actuate the defrost control, observe at least one defrost cycle to make sure the unit defrosts completely.

HEAT PUMP OPERATION

Cooling Cycle

When the heat pump is in the cooling cycle, it operates exactly as a Summer Air Conditioner unit. In this mode, all the charts and data for service that apply to summer air conditioning apply to the heat pump. Most apply on the heating cycle except that "condenser" becomes "evaporator", "evaporator" becomes "condenser", "cooling" becomes "heating".

Heating Cycle

The heat pump operates in the heating cycle by redirecting refrigerant flow through the refrigerant circuit external to the compressor. This is accomplished with through the reversing valve. Hot discharge vapor from the compressor is directed to the indoor coil (evaporator on the cooling cycle) where the heat is removed, and the vapor condenses to liquid. It then goes through the expansion device to the outdoor coil (condenser on the cooling cycle) where the liquid is evaporated, and the vapor goes to the compressor.

When the solenoid valve coil is operated either from heating to cooling or vice versa, the piston in the reversing valve to the low pressure (high pressure) reverse positions in the reversing valve.

The following figures show a schematic of a heat pump on the cooling cycle and the heating cycle. In addition to a reversing valve, a heat pump is equipped with an expansion device and check valve for the indoor coil, and similar equipment for the outdoor coil. It is also provided with a defrost control system.

The expansion devices are flowrator distributors and perform the same function on the heating cycle as on the cooling cycle. The flowrator distributors also act as check valves to allow for the reverse of refrigerant flow.

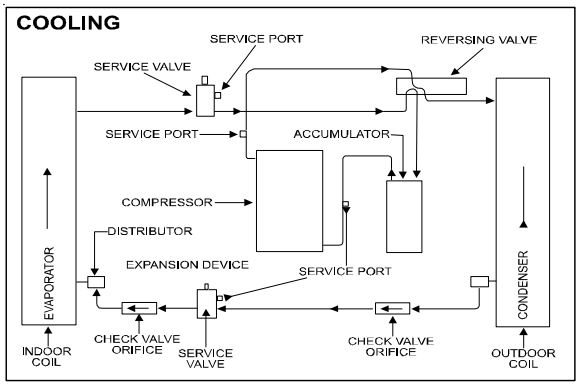

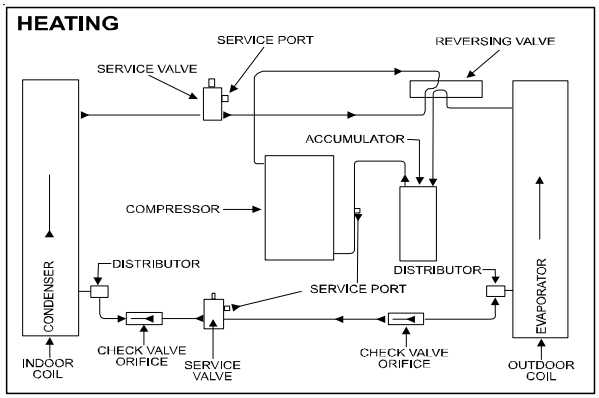

When the heat pump is on the heating cycle, the outdoor coil is functioning as an evaporator. The temperature of the refrigerant in the outdoor coil must be below the temperature of the outdoor air in order to extract heat from the air. Thus, the greater the difference in the outdoor temperature and the outdoor coil temperature, the greater the heating capacity of the heat pump. This phenomenon is a characteristic of a heat pump. It is a good practice to provide supplementary heat for all heat pump installations in areas where the temperature drops below 45° F. It is also a good practice to provide sufficient supplementary heat to handle the entire heating requirement should there be a component failure of the heat pump, such as a compressor, or refrigerant leak, etc.

SYSTEM OPERATION

Since the temperature of the refrigerant in the outdoor coil on the heating cycle is generally below freezing point, frost forms on the surfaces of the outdoor coil under certain weather conditions of temperature and relative humidity. Therefore, it is necessary to reverse the flow of the refrigerant to provide hot gas in the outdoor coil to melt the frost accumulation. This is accomplished by reversing the heat pump to the cooling cycle. At the same time, the outdoor fan stops to hasten the temperature rise of the outdoor coil and lessen the time required for defrosting. The indoor blower continues to run and the supplementary heaters are energized.

Defrost Control

During operation the power to the circuit board is controlled by a temperature sensor, which is clamped to a feeder tube entering the outdoor coil. Defrost timing periods of 30,60 and 90 minutes may be selected by connecting the circuit board jumper to 30, 60 and 90 respectively. Accumulation of time for the timing period selected starts when the sensor closes (approximately 31° F), and when the wall thermostat calls for heat. At the end of the timing period, the unit's defrost cycle will be initiated provided the sensor remains closed. When the sensor opens (approximately 75° F), the defrost cycle is terminated and the timing period is reset. If the defrost cycle is not terminated due to the sensor temperature, a ten minute override interrupts the unit's defrost period.

Refrigeration System Checks

Ensure the hold-down bolts on the compressor are secure and have not vibrated loose during shipment. Check that vibration grommets have been installed. Visually check all piping and clamps. The entire refrigeration system has been factory charged and tested, making it unnecessary to field charge. Factory charges are shown on the unit nameplate.

Final System Checks

1. Check to see if all supply and return air grilles are adjusted and the air distribution system is balanced for the best compromise between heating and cooling.
2. Check for air leaks in the ductwork. See Sections on **Air Flow Adjustments.**
3. Make sure the unit is free of "rattles", and the tubing in the unit is free from excessive vibration. Also make sure tubes or lines are not rubbing against each other or sheet metal surfaces or edges. If so, correct the trouble.
4. Set the thermostat at the appropriate setting for cooling and heating or automatic changeover for normal use.
5. Be sure the Owner is instructed on the unit operation, filter, servicing, correct thermostat operation, etc.

SCHEDULED MAINTENANCE

MAINTENANCE

WARNING

HIGH VOLTAGE!
DISCONNECT ALL POWER BEFORE SERVICING OR INSTALLING THIS UNIT. MULTIPLE POWER SOURCES MAY BE PRESENT. FAILURE TO DO SO MAY CAUSE PROPERTY DAMAGE, PERSONAL INJURY OR DEATH.

WARNING

TO PREVENT PERSONAL INJURY OR DEATH DUE TO IMPROPER INSTALLATION, ADJUSTMENT, ALTERATION, SERVICE OR MAINTENANCE, REFER TO THIS MANUAL. FOR ADDITIONAL ASSISTANCE OR INFORMATION, CONSULT A QUALIFIED INSTALLER, SERVICE AGENCY OR THE GAS SUPPLIER.

CAUTION

SHEET METAL PARTS, SCREWS, CLIPS AND SIMILAR ITEMS INHERENTLY HAVE SHARP EDGES, AND IT IS NECESSARY THAT THE INSTALLER AND SERVICE PERSONNEL EXERCISE CAUTION.

Preventive maintenance is the best way to avoid unnecessary expense and inconvenience. Have this system inspected at regular intervals by qualified service personnel, at least twice a year. Routine maintenance should cover the following items:

1. Tighten all belts, set screws, and wire connections.
2. Clean evaporator and condenser coils mechanically or with cold water, if necessary. Usually any fouling is only matted on the entering air face of the coil and can be removed by brushing.
3. Lubricate motor bearings.
4. Align or replace belts as needed.
5. Replace filters as needed (see below).
6. Check for blockage of condensate drain.
7. Check power and control voltages.
8. Check running amperage.
9. Check operating temperatures and pressures.
10. Check and adjust temperature and pressure controls.
11. Check and adjust damper linkages.
12. Check operation of all safety controls.
13. Examine gas furnaces (see below and the User's Information Manual).
14. Check condenser fans and tighten set screws.

FILTERS

CAUTION

TO PREVENT PROPERTY DAMAGE DUE TO FIRE AND LOSS OF EQUIPMENT EFFICIENCY OR EQUIPMENT DAMAGE DUE TO DUST AND LINT BUILD UP ON INTERNAL PARTS, NEVER OPERATE UNIT WITHOUT AN AIR FILTER INSTALLED IN THE RETURN AIR SYSTEM.

Every application may require a different frequency of replacement of dirty filters. Filters must be replaced at least every three (3) months during operating seasons.

Dirty filters are the most common cause of inadequate heating or cooling performance. Filter inspection should be made at least every two months; more often if necessary because of local conditions and usage.

Dirty throwaway filters should be discarded and replaced with a new, clean filter.

Disposable return air filters are supplied with this unit. See the unit Specification Sheet for the correct size and part number. To remove the filters, remove the filter access panel on return side of the unit.

CABINET FINISH MAINTENANCE

Use a fine grade automotive wax on the cabinet finish to maintain the finish's original high luster. This is especially important in installations with extended periods of direct sunlight.

CLEAN OUTSIDE COIL (QUALIFIED SERVICER ONLY)

The coil with the outside air flowing over it should be inspected annually and cleaned as frequently as necessary to keep the finned areas free of lint, hair and debris.

CONDENSER AND INDUCED DRAFT MOTORS

Bearings on the condenser fan motors and the combustion fan motor are permanently lubricated. No additional oiling is required.

FLAME SENSOR (QUALIFIED SERVICER ONLY)

A drop in the flame current can be caused by a nearly invisible coating on the flame sensor. This coating, created by the fuel or combustion air supply, can be removed by carefully cleaning the flame sensor with steel wool.

NOTE: After cleaning, the microamp signal should be stable and in the range of 4 - 6 microamps DC.

FLUE PASSAGES (QUALIFIED SERVICER ONLY)

At the start of each heating season, inspect and, if necessary, clean the unit flue passage.

LUBRICATION

The fan shaft bearings, the 1 to 2 HP supply fan motors, the condenser fan motors and compressors are permanently lubricated.

SCHEDULED MAINTENANCE

Inspection & Cleaning

All flue product carrying areas of the furnace, its vent system, and main burners should be examined by a qualified service agency before the start of each heating season. This examination is necessary for continued safe operation. Particular attention should be given to deterioration from corrosion or other sources. This examination is accomplished in the following manner.

1. Disconnect power to the unit and remove furnace section access panel.
2. Remove burner assembly:
   a. Disconnect the wires from the gas valve after noting which wires are connected to each terminal.
   b. Disconnect wires from the flame rod and ignition electrode.
   c. Disconnect the gas piping at the union.
   d. The entire burner assembly can now be removed from the unit.

NOTE: Use all screws that were removed; they are necessary for safe and proper operation of the unit.

3. Inspect and periodically clean the vent outlet (bird screen) on the access panel.

NOTE: Periodic observation of the flame and a log of $C0_2$ measurements are recommended. This will aid in determining whether the furnace is operating efficiently or if the furnace requires cleaning.

Flames should be stable, soft and blue (dust may cause orange tips but must not be yellow). The flames must extend directly outward from the burner without curling, floating or lifting off.

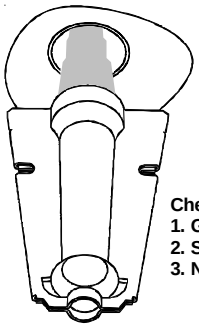

Check the burner flames for:
1. Good adjustment
2. Stable, soft and blue
3. Not curling, floating, or lifting off.

Burner Flame

WARNING

To avoid personal injury or death due to electric shock, do not remove any internal compartment covers or attempt any adjustment. Contact a qualified servicer at once if an abnormal flame should develop.

At least once a year, prior to or during the heating season, make a visual check of the burner flames.

NOTE: This will involve removing and reinstalling the heat exchanger door on the unit, which is held by two screws. If you are uncertain about your ability to do this, contact a qualified servicer.

If a strong wind is blowing, it may alter the airflow pattern within the unit enough that an inspection of the burner flames is not possible.

Functional Parts

Refer to the unit Parts Catalog for a list of functional parts. Parts are available from your distributor.

COOLING ANALYSIS CHART

Complaint	No Cooling							Unsatisfactory Cooling					System Operating Pressures			Test Method Remedy	See Service Procedure Ref.
POSSIBLE CAUSE DOTS IN ANALYSIS GUIDE INDICATE "POSSIBLE CAUSE" SYMPTOM	System will not start	Compressor will not start - fan runs	Comp. and Cond. Fan will not start	Evaporator fan will not start	Condenser fan will not start	Compressor runs - goes off on overload	Compressor cycles on overload	System runs continuously - little cooling	Too cool and then too warm	Not cool enough on warm days	Certain areas too cool, others too warm	Compressor is noisy	Low suction pressure	High suction pressure	High head pressure		
Power Failure	●															Test Voltage	S-1
Blown Fuse	●		●	●												Inspect Fuse Size & Type	S-1
Unbalanced Power, 3PH		●				●	●									Test Voltage	S-1
Loose Connection	●			●		●										Inspect Connection - Tighten	S-2, S-3
Shorted or Broken Wires	●	●	●	●	●	●										Test Circuits With Ohmmeter	S-2, S-3
Open Fan Overload				●	●											Test Continuity of Overload	S-17A
Faulty Thermostat	●		●	●					●							Test Continuity of Thermostat & Wiring	S-3
Faulty Transformer	●		●													Check Control Circuit with Voltmeter	S-4
Shorted or Open Capacitor		●		●	●	●	●									Test Capacitor	S-15
Internal Compressor Overload Open		●														Test Continuity of Overload	S-17A
Shorted or Grounded Compressor		●				●										Test Motor Windings	S-17B
Compressor Stuck		●				●	●									Use Test Cord	S-17D
Faulty Compressor Contactor			●		●	●										Test Continuity of Coil & Contacts	S-7, S-8
Faulty Fan Relay				●												Test Continuity of Coil And Contacts	S-7
Open Control Circuit				●												Test Control Circuit with Voltmeter	S-4
Low Voltage		●				●	●									Test Voltage	S-1
Faulty Evap. Fan Motor				●									●			Repair or Replace	S-16
Shorted or Grounded Fan Motor					●										●	Test Motor Windings	S-16
Improper Cooling Anticipator							●		●							Check Resistance of Anticipator	S-3B
Shortage of Refrigerant							●	●					●			Test For Leaks, Add Refrigerant	S-101,103
Restricted Liquid Line							●	●					●		●	Remove Restriction, Replace Restricted Part	S-112
Dirty Air Filter								●		●	●		●			Inspect Filter-Clean or Replace	
Dirty Indoor Coil								●		●	●		●			Inspect Coil - Clean	
Insufficient air across Indoor Coil								●		●	●		●			Check Blower Speed and Rotation, Belt, Pulleys, Duct Static, Filter	S-200,205, 206, 207
Too much air across Indoor Coil														●		Reduce Blower Speed, Check Pulley Adjustment	S-205, 207
Overcharge of Refrigerant						●	●					●		●	●	Recover Part of Charge	S-113
Dirty Outdoor Coil						●	●	●		●					●	Inspect Coil - Clean	
Noncondensibles							●	●		●					●	Recover Charge, Evacuate, Recharge	S-114
Recirculation of Condensing Air							●	●		●					●	Remove Obstruction to Air Flow	
Infiltration of Outdoor Air								●		●	●					Check Windows, Doors, Vent Fans, Etc.	
Improperly Located Thermostat						●			●							Relocate Thermostat	
Air Flow Unbalanced									●		●					Readjust Air Volume Dampers	
System Undersized								●		●						Refigure Cooling Load	
Broken Internal Parts												●				Replace Compressor	S-115
Broken Valves								●				●		●		Test Compressor Efficiency	S-104
Inefficient Compressor								●						●		Test Compressor Efficiency	S-104
Expansion Device Restricted						●	●	●		●			●		●	Remove Restriction, Replace Expansion Device	111
Loose Hold-down Bolts												●				Tighten Bolts	
Flowrator Not Seating Properly								●						●		Check Flowrator & Seat or Replace Flowrator	S-111

● **Cooling Cycle**

SERVICING

GAS HEATING ANALYSIS CHART

Complaint	No Heat				Unsatisfactory Heat						Test Method Remedy	See Service Procedure Reference
POSSIBLE CAUSE DOTS IN ANALYSIS GUIDE INDICATE "POSSIBLE CAUSE" SYMPTOM	System Will Not Start	Burner Won't Ignite	Burner Ignites-Locks Out	Burner Lights - Little or No Air Through Vents	Burner Shuts Off prior to T'Stat being Satasfied	Short Cycles	Long Cycles	Soot and /or Fumes	To Much Heat	Not Enough Heat		
Power Failure	●										Test Voltage	S-1
Blown Fuse	●										Test Voltage	S-1
Loose Connection	●										Check Wiring	S-2, S-3
Shorted or Broken Wires	●										Check Wiring	S-2, S-3
No Low Voltage	●										Check Transformer	S-4
Faulty Thermostat	●					●	●		●		Check Thermostat	S-3
Faulty Transformer	●										Check Transformer	S-4
Poor or High Resistance Ground			●								Measure Ground Resistance	S-313
Improper Heat Anticipator Setting						●	●		●	●	Adjust Heat Anticipator Setting	S-3
Improper Thermostat Location						●	●		●	●	Relocate Thermostat	
Faulty Limit or Roll Out Switch		●			●						Test Control	S-300-302
Faulty Flame Sensor			●								Test Flame Sensor	S-314
Faulty Ignition Control	●	●	●	●							Test Control	S-313
Gas Valve or Gas Supply Shut Off		●									Turn Valves to On Position	S-304
Faulty Induced Draft Blower	●	●						●			Test Blower	S-303
Dirty Flame Sensor, Low uA			●								Clean Flame Sensor	S-314
Flame Sensor not in Flame, Low uA			●								Test/Adjust Position of Flame Sensor	S-314
Faulty Gas Valve		●						●		●	Replace Gas Valve	S-304
Open Auxillary Limit		●		●	●						Check Blower Speed, Rotation, Belt, Pulleys, Duct Static, Filter	S16A,16D,200, 201,205,206,207
Improper Air Flow or Distribution				●	●					●	Check Blower Speed, Rotation, Belt, Pulleys, Duct Static, Filter	S16A,16D,200, 201,205,206,207
Faulty Blower Motor, Belt, or Pulley				●							Check Blower Speed, Rotation, Belt, Pulleys, Duct Static, Filter	S16A,16D,200, 201,205,206,207
Locking out on Main Limit			●		●					●	Check Limit, Gas Press., Temp. Rise, Blower Rotation, Belt, Pulleys, Duct Static, Filter	S-300, 307, 201
Delayed Ignition								●			Test for Delayed Ignition	S-308
Flashback								●			Test for Flashback	S-309
Orifice Size								●	●	●	Check Orifices	S-306
Gas Pressure		●						●	●	●	Check Gas Pressure	S-307
Cracked Heat Exchanger								●			Check Burner Flames	S-302
Stuck Gas Valve		●						●	●		Replace Gas Valve	S-304
Furnace Undersized										●	Replace with Proper Size Furnace	
Faulty Pressure Switch		●	●		●						Test Pressure Switch	S-310
Blocked or Restricted Flue								●			Check Flue/Drawdown Pressure	S-310
Open Roll Out Switch		●	●								Test Control	S-302
Bouncing On Pressure Switch			●								Test Negative Pressure, Flue Blockage	S-310

SERVICING

Table of Contents

S-1 Checking Voltage 36
S-2 Checking Wiring 37
S-3 Checking Thermostat, Wiring & Anticipator .. 37
S-3A Thermostat & Wiring 37
S-3B Cooling Anticipator 37
S-3C Heating Anticipator 37
S-4 Checking Transformer & Control Circuit 38
S-7 Checking Contactor and/or Relays 38
S-8 Checking Contactor Contacts 38
S-9 Checking Fan Relay Contact 39
S-11 Checking Loss of Charge Protection 40
S-12 Checking High Pressure Control 40
S-13 Checking Low Pressure Control 41
S-15 Checking Capacitor 41
S-15A Resistance Check 41
S-15B Capacitance Check 42
S-16 Checking Motors 42
S-16A Checking Fan & Blower Motor Windings (PSC Motors) 42
S-16D Checking EEM Motors 42
S-17 Checking Compressor Windings 43
S-17A Resistance Test 43
S-17B Ground Test 43
S-17D Operation Test 44
S-18 Testing Crankcase Heater (optional item) 44
S-18A Crankcase Heater Thermostat 44
S-21 Checking Reversing Valve & Solenoid 45
S-24 Testing Defrost Control 45
S-25 Testing Defrost Thermostat 45
S-50 Checking Heater Limit Control(s) 46
S-52 Checking Heater Elements 46
S-100 Refrigeration Repair Practice 46
S-101 Leak Testing 46
S-102 Evacuation 47
S-103 Charging 47
S-104 Checking Compressor Efficiency 48
S-106 Overfeeding 48
S-108 Checking Superheat 49
S-109 Checking Subcooling 49
S-110 Checking Expansion Valve Operation 49
S-111 Fixed Orifice Restriction Devices 52
S-112 Checking Restricted Liquid Line 52
S-113 Refrigerant Overcharge 52
S-114 Non-condensables 52
S-115 Compressor Burnout 52
S-200 Checking External Static Pressure 53
S-201 Checking Temperature Rise 53
S-205 Checking Belt Tension 54
S-206 Indoor Fan Rotation Check 54
S-207 Variable Sheave Adjustment 55
S-300 Testing Primary Limit 55
S-301 Testing Auxiliary Limit 55
S-302 Checking Flame Rollout Switch 56
S-303 Testing Inducer Motor 57
S-304 Testing Gas Valve 57
S-305 Checking Main Burners 58
S-306 Checking Orifices 58
S-307 Checking Gas Pressure 59
S-308 Checking For Delayed Ignition 60
S-309 Checking for Flashback 60
S-310 Checking Pressure Control 61
S-311 High Altitude Application 61
S-313 Testing Ignition Control Module 62
S-314 Checking Flame Sensor 64

WARNING

HIGH VOLTAGE!
Disconnect ALL power before servicing or installing this unit. Multiple power sources may be present. Failure to do so may cause property damage, personal injury or death.

SERVICING

S-1 CHECKING VOLTAGE

WARNING

HIGH VOLTAGE!
Disconnect ALL power before servicing or installing this unit. Multiple power sources may be present. Failure to do so may cause property damage, personal injury or death.

1. Remove doors, control panel cover, etc. from unit being tested.

With power ON:

WARNING

Line Voltage now present.

2. Using a voltmeter, measure the voltage across terminals L1 and L2 of the contactor for single phase units, and L3, for 3 phase units.
3. No reading - indicates open wiring, open fuse(s) no power or etc. from unit to fused disconnect service. Repair as needed.
4. With ample voltage at line voltage connectors, energize the unit.
5. Measure the voltage with the unit starting and operating, and determine the unit Locked Rotor Voltage.

   Locked Rotor Voltage is the actual voltage available at the compressor during starting, locked rotor, or a stalled condition. Measured voltage should be above minimum listed in chart below.

   To measure Locked Rotor Voltage attach a voltmeter to the run "R" and common "C" terminals of the compressor, or to the T_1 and T_2 terminals of the contactor. Start the unit and allow the compressor to run for several seconds, then shut down the unit. Immediately attempt to restart the unit while measuring the Locked Rotor Voltage.
6. Voltmeter should read within the voltage tabulation as shown. If the voltage falls below the minimum voltage, check the line wire size. Long runs of undersized wire can cause low voltage. If wire size is adequate, notify the local power company in regards to either low or high voltage.

Unit Supply Voltage		
Voltage	Min.	Max.
208/230	198	253
460	437	506
575	546	604

Three phase units require a balanced 3 phase power supply to operate. If the percentage of voltage imbalance exceeds 3% the unit must not be operated until the voltage condition is corrected.

$$\text{\% Voltage Imbalance} = \frac{\text{Max. Voltage Deviation From Average Voltage}}{\text{Average Voltage}} \times 100$$

To find the percentage of imbalance, measure the incoming power supply.

L1 - L2 = 240V
L1 - L3 = 232V
L2 - L3 = 238V
Total 710V

$$\text{Avg. V} = \frac{710}{3} = \mathbf{236.7}$$

To find Max. deviation:
240 - 236.7 = +3.3
232 - 236.7 = **-4.7**
238 - 236.7 = +1.3

Max deviation was 4.7V

$$\text{\% Voltage Imbalance} = \frac{4.7}{236.7} = \mathbf{1.99\%}$$

If the percentage of imbalance had exceeded 3%, it must be determined if the imbalance is in the incoming power supply or the equipment. To do this rotate the legs of the incoming power and retest voltage as shown below.

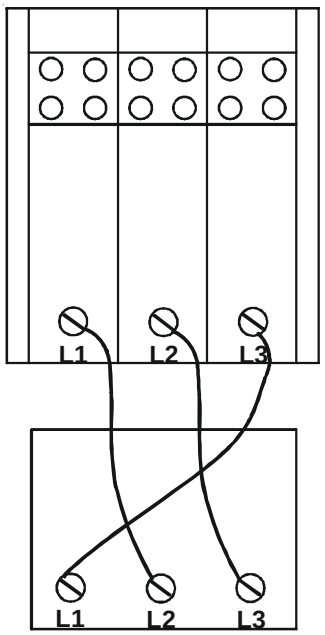

L1 - L2 = 240V
L1 - L3 = 227V
L2 - L3 = 238V

Rotate all 3 incoming legs as shown.

L1 - L2 = 227V
L1 - L3 = 238V
L2 - L3 = 240V

By the voltage readings we see that the imbalance rotated or traveled with the switching of the incoming legs. Therefore the imbalance lies within the incoming power supply.

If the imbalance had not changed then the problem would lie within the equipment. Check for current leakage, shorted motors, etc.

SERVICING

S-2 CHECKING WIRING

WARNING

HIGH VOLTAGE!
Disconnect ALL power before servicing or installing this unit. Multiple power sources may be present. Failure to do so may cause property damage, personal injury or death.

1. Check wiring visually for signs of overheating, damaged insulation and loose connections.
2. Use an ohmmeter to check continuity of any suspected open wires.
3. If any wires must be replaced, replace with comparable gauge and insulation thickness.

S-3 CHECKING THERMOSTAT, WIRING, AND ANTICIPATOR

THERMOSTAT WIRE SIZING CHART	
LENGTH OF RUN	MIN. COPPER WIRE GAUGE (AWG)
25 feet	18
50 feet	16
75 feet	14
100 feet	14
125 feet	12
150 feet	12

S-3A THERMOSTAT AND WIRING

WARNING

Line Voltage now present.

With power ON, thermostat calling for cooling

1. Use a voltmeter to check for 24 volts at thermostat wires C and Y in the unit control panel.
2. No voltage indicates trouble in the thermostat or wiring.
3. Check the continuity of the thermostat and wiring. Repair or replace as necessary.

Indoor Blower Motor

With power ON:

WARNING

Line Voltage now present.

1. Set fan selector switch at thermostat to "ON" position.
2. With voltmeter, check for 24 volts at wires C and G.
3. No voltage indicates the trouble is in the thermostat or wiring.
4. Check the continuity of the thermostat and wiring. Repair or replace as necessary.

S-3B COOLING ANTICIPATOR

The cooling anticipator is a small heater (resistor) in the thermostat. During the "off" cycle, it heats the bimetal element helping the thermostat call for the next cooling cycle. This prevents the room temperature from rising too high before the system is restarted. A properly sized anticipator should maintain room temperature within 1 1/2 to 2 degree range.

The anticipator is supplied in the thermostat and is not to be replaced. If the anticipator should fail for any reason, the thermostat must be changed.

S-3C HEATING ANTICIPATOR

The heating anticipator is a wire-wound adjustable heater, which is energized during the "ON" cycle to help prevent overheating of the conditioned space.

The anticipator is a part of the thermostat and if it should fail for any reason, the thermostat must be replaced. See the following for recommended heater anticipator setting.

To determine the proper setting, use an ammeter to measure the current on the "W" wire going to the thermostat.

Use an amprobe as shown below. Wrap 10 turns of thermostat wire around the stationary jaw of the amprobe and divide the reading by 10.

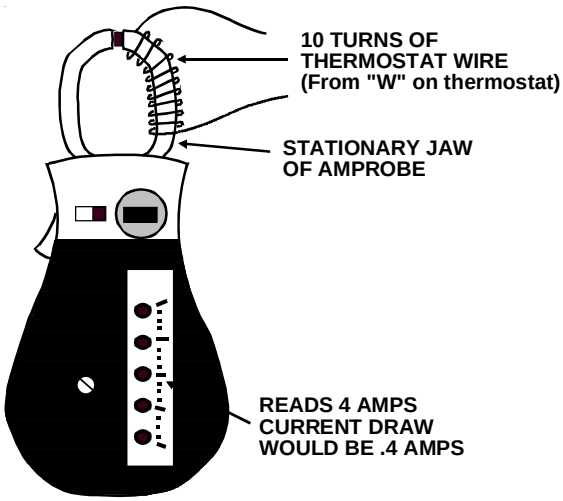

CHECKING HEAT ANTICIPATOR AMP DRAW

SERVICING

S-4 CHECKING TRANSFORMER AND CONTROL CIRCUIT

WARNING

HIGH VOLTAGE!
Disconnect ALL power before servicing or installing this unit. Multiple power sources may be present. Failure to do so may cause property damage, personal injury or death.

A step-down transformer (either 208-240, 460 or 575 volt primary to 24 volt secondary) is provided with each unit. This allows ample capacity for use with resistance heaters.

WARNING

Disconnect ALL power before servicing.

1. Remove control panel cover to gain access to transformer.

With power ON:

WARNING

Line Voltage now present.

2. Using a voltmeter, check voltage across secondary voltage side of transformer (R to C).
3. No voltage indicates faulty transformer, bad wiring, or bad splices.
4. Check transformer primary voltage at incoming line voltage connections and/or splices.
5 If line voltage available at primary voltage side of transformer and wiring and splices good, transformer is inoperative. Replace.

S-7 CHECKING CONTACTOR AND/OR RELAYS

WARNING

HIGH VOLTAGE!
Disconnect ALL power before servicing or installing this unit. Multiple power sources may be present. Failure to do so may cause property damage, personal injury or death.

The compressor contactor and other relay holding coils are wired into the low or line voltage circuits. When the control circuit is energized, the coil pulls in the normally open contacts or opens the normally closed contacts. When the coil is de-energized, springs return the contacts to their normal position.

NOTE: *Most single phase contactors break only one side of the line (L1), leaving 115 volts to ground present at most internal components.*

1. Remove the leads from the holding coil.
2. Using an ohmmeter, test across the coil terminals.

If the coil does not test continuous, replace the relay or contactor.

S-8 CHECKING CONTACTOR CONTACTS

SINGLE PHASE

WARNING

HIGH VOLTAGE!
Disconnect ALL power before servicing or installing this unit. Multiple power sources may be present. Failure to do so may cause property damage, personal injury or death.

1. Disconnect the wire leads from the terminal (T) side of the contactor.
2. With power ON, energize the contactor.

WARNING

Line Voltage now present.

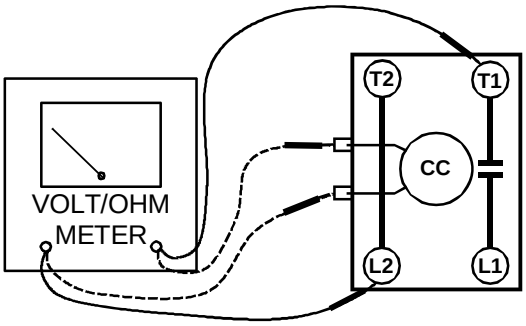

---- Ohmmeter for testing holding coil
—— Voltmeter for testing contacts

TESTING COMPRESSOR CONTACTOR (Single Phase)

3. Using a voltmeter, test across terminals.
   A. L1 - L2 - No voltage. Check breaker or fuses on main power supply.
   B. L2 - T1 - No voltage indicates CC1 contacts open.

If a no voltage reading is obtained - replace the contactor.

THREE PHASE

Using a voltmeter, test across terminals.

A. L1-L2, L1-L3, and L2-L3 - If voltage is present, proceed to B. If voltage is not present, check breaker or fuses on main power supply..

B. T1-T2, T1-T3, and T2-T3 - If voltage readings are not the same as in "A", replace contactor.

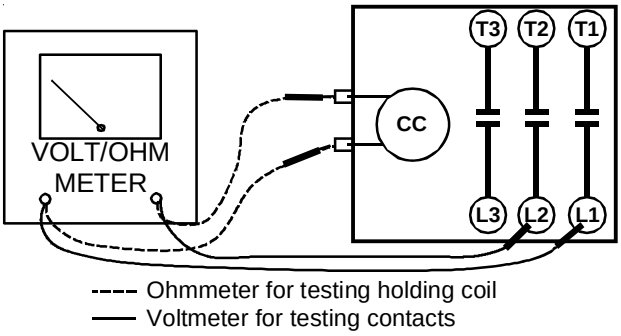

TESTING COMPRESSOR CONTACTOR (ThreePhase)

S-9 CHECKING FAN RELAY CONTACTS

DCG:

The fan relays are incorporated into the control board. See section S-313 for checking control board for single phase gas models.

For 3 phase and belt drive models, the procedure for testing the fan relay contacts will be the same as checking the compressor contactor contacts (See section S-8).

DCC/DCH:
The **E**lectronic **B**lower **T**ime **D**elay **R**elay is used on PSC and belt driven models.

WARNING

HIGH VOLTAGE!
Disconnect ALL power before servicing or installing this unit. Multiple power sources may be present. Failure to do so may cause property damage, personal injury or death.

Checking EBTDR High Voltage Contacts

1. With power off, remove wires from terminals NC, COM, and NO.
2. Using a VOM, check for resistance from NO to COM. Should read open. Next, check for resistance from NC to COM. Should read closed.
3. If not as above, replace EBTDR.

Checking EBTDR Contact Operation

With power on:

WARNING

Line Voltage now present.

1. Set the thermostat to the fan "on" position.
2. Check for 24 volts at the C and G terminals of the EBTDR.
3. If no voltage present, check fan circuit from thermostat. If 24 volts present, proceed to step 4.
4. Using a VOM, check for line voltage from the purple wire at the transformer (terminal 3 on 240 volt units, terminal 2 on 208 volt units) to terminal NO on the EBTDR. Should read line voltage. If no voltage present, check line voltage wiring in unit. If line voltage present, proceed to step 5.
5. Using a VOM, check for line voltage from the purple wire at the transformer (terminal 3 on 240 volt units, terminal 2 on 208 volt units) to the COM terminal on the EBTDR. Should read line voltage. If not as above, replace EBTDR.

PSC equipped, single phase model coolers and heat pumps have an isolation relay with a 240 volt holding coil in addition to the EBTDR.

WARNING

Disconnect ALL power before servicing.

Turn power off.

Testing relay holding coil

1. Remove the leads from the holding coil terminals 1 and 3.
2. Using an ohmmeter, test across the coil terminals 1 and 3. If the coil does not test continuous, replace the relay.

Testing relay contacts

WARNING

Disconnect ALL power before servicing.

Turn power off.

1. Using a VOM, test resistance across relay terminals 2 and 4. Should read open.
2. Turn power on.

WARNING

Line Voltage now present.

3. Apply 240 volts to coil terminals 1 and 3.
4. Using a VOM, check for 240 volts from terminals 3 and 1 of relay. Should read 240 volts. In no voltage, check wiring from heater kit to relay. If voltage present, proceed to step 5.

5. Using a VOM, check for 240 volts from L1 at contactor to terminal 4 of relay. Should read 240 volts. Next check from L1 at contactor to terminal 2 of relay. Should read 240 volts.

If not as above, replace relay.

On the 5 ton units with the EEM motor, a standard fan relay is used.

WARNING

Disconnect ALL power before servicing.

Turn power off.

Testing relay holding coil

1. Remove the leads from the holding coil.
2. Using an ohmmeter, test across the coil terminals 1 and 3. If the coil does not test continuous, replace the relay.

Testing relay contacts

WARNING

Disconnect ALL power before servicing.

Turn power off.

1. Using a VOM, test resistance across relay terminals 2 and 4. Should read open.
2. Turn power on.

WARNING

Line Voltage now present.

3. Apply 24 volts to coil terminals 1 and 3.
4. Using a VOM, check for 24 volts from terminals 3 and 2 of relay. Should read 24 volts. If no voltage, check low voltage wiring from transformer to relay. If voltage present, proceed to step 5.
5. Using a VOM, check for 24 volts from terminals 3 and 4 of relay. Should read 24 volts.

If not as above, replace relay.

S-11 CHECKING LOSS OF CHARGE PROTECTOR

(Heat Pump Models)

The loss of charge protector senses the pressure in the liquid line and will open its contacts on a drop in pressure. The low pressure control will automatically reset itself with a rise in pressure.

The low pressure control is designed to cut-out (open) at approximately 22 PSIG. It will automatically cut-in (close) at approximately 50 PSIG.

Test for continuity using a VOM and if not as above, replace the control.

S-12 CHECKING HIGH PRESSURE CONTROL

WARNING

HIGH VOLTAGE!
Disconnect ALL power before servicing or installing this unit. Multiple power sources may be present. Failure to do so may cause property damage, personal injury or death.

The high pressure control senses the pressure in the discharge line. If abnormally high discharge pressures develop, the contacts of the control open, breaking the control circuit before the compressor motor overloads. This control is automatically reset.

1. Using an ohmmeter, check across terminals of high pressure control, with wire removed. If not continuous, the contacts are open.
3. Attach a gauge to the access fitting on the liquid line.

With power ON:

WARNING

Line Voltage now present.

4. Start the system and place a piece of cardboard in front of the condenser coil, raising the condensing pressure.
5. Check pressure at which the high pressure control cuts-out.

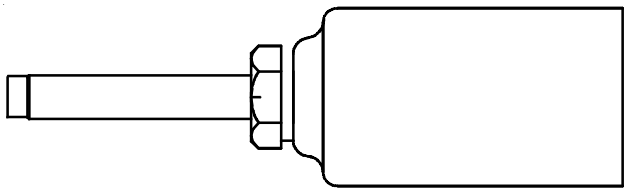

If it cuts-out at 660 PSIG ± 10 PSIG, it is operating normally (See causes for high head pressure in Service Problem Analysis Guide). If it cuts out below this pressure range, replace the control. The control should reset at 420 PSIG ± 25 PSIG.

SERVICING

S-13 CHECKING LOW PRESSURE CONTROL

The low pressure control senses the pressure in the suction line and will open its contacts on a drop in pressure. The low pressure control will automatically reset itself with a rise in pressure.

The low pressure control is designed to cut-out (open) at approximately 22 PSIG ± 7 PSIG. It will automatically cut-in (close) at approximately 50 PSIG ± 7 PSIG.

Test for continuity using a VOM and if not as above, replace the control.

S-15 CHECKING CAPACITOR

CAPACITOR, RUN

A run capacitor is wired across the auxiliary and main windings of a single phase permanent split capacitor motor. The capacitors primary function is to reduce the line current while greatly improving the torque characteristics of a motor. This is accomplished by using the 90° phase relationship between the capacitor current and voltage in conjunction with the motor windings so that the motor will give two phase operation when connected to a single phase circuit. The capacitor also reduces the line current to the motor by improving the power factor.

CAPACITOR, START

SCROLL COMPRESSOR MODELS

Hard start components are not required on Scroll compressor equipped units due to a non-replaceable check valve located in the discharge line of the compressor. However hard start kits are available and may improve low voltage starting characteristics.

This check valve closes off high side pressure to the compressor after shut down allowing equalization through the scroll flanks. Equalization requires only about one or two seconds during which time the compressor may turn backwards.

Your unit comes with a 180-second anti-short cycle to prevent the compressor from starting and running backwards.

MODELS EQUIPPED WITH A HARD START DEVICE

A start capacitor is wired in parallel with the run capacitor to increase the starting torque. The start capacitor is of the electrolytic type, rather than metallized polypropylene as used in the run capacitor.

A switching device must be wired in series with the capacitor to remove it from the electrical circuit after the compressor starts to run. Not removing the start capacitor will overheat the capacitor and burn out the compressor windings.

These capacitors have a 15,000 ohm, 2 watt resistor wired across its terminals. The object of the resistor is to discharge the capacitor under certain operating conditions, rather than having it discharge across the closing of the contacts within the switching device such as the Start Relay, and to reduce the chance of shock to the servicer. See the Servicing Section for specific information concerning capacitors.

RELAY, START

A potential or voltage type relay is used to take the start capacitor out of the circuit once the motor comes up to speed. This type of relay is position sensitive. The normally closed contacts are wired in series with the start capacitor and the relay holding coil is wired parallel with the start winding. As the motor starts and comes up to speed, the increase in voltage across the start winding will energize the start relay holding coil and open the contacts to the start capacitor.

Two quick ways to test a capacitor are a resistance and a capacitance check.

S-15A RESISTANCE CHECK

WARNING

HIGH VOLTAGE!
Disconnect ALL power before servicing or installing this unit. Multiple power sources may be present. Failure to do so may cause property damage, personal injury or death.

1. Discharge capacitor and remove wire leads.

WARNING

Discharge capacitor through a 20 to 30 OHM resistor before handling.

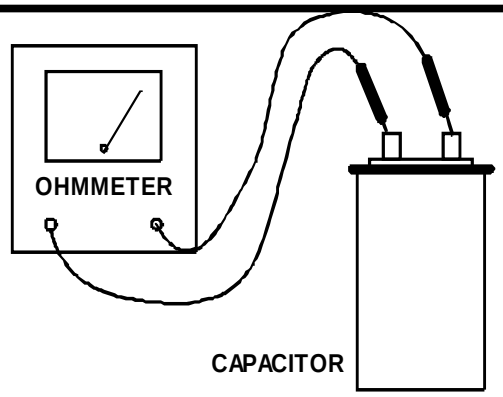

TESTING CAPACITOR RESISTANCE

2. Set an ohmmeter on its highest ohm scale and connect the leads to the capacitor -
   a. Good Condition - indicator swings to zero and slowly returns to infinity. (Start capacitor with bleed resistor will not return to infinity. It will still read the resistance of the resistor).
   b. Shorted - indicator swings to zero and stops there -replace.
   c. Open - no reading - replace. (Start capacitor would read resistor resistance.)

SERVICING

S-15B CAPACITANCE CHECK

Using a hookup as shown below, take the amperage and voltage readings and use them in the formula:

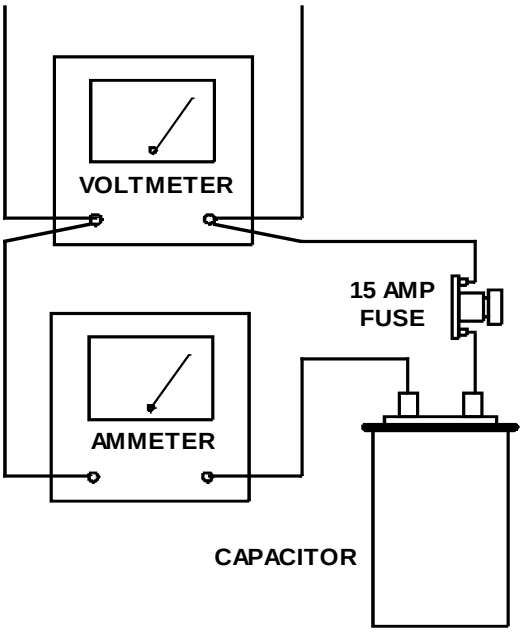

TESTING CAPACITANCE

WARNING

Discharge capacitor through a 20 to 30 OHM resistor before handling.

$$\text{Capacitance (MFD)} = \frac{2650 \times \text{Amperage}}{\text{Voltage}}$$

S-16 CHECKING MOTORS

S-16A CHECKING FAN AND BLOWER MOTOR WINDINGS (PSC MOTORS)

Applies only to units with PSC Motors

The auto reset fan motor overload is designed to protect the motor against high temperature and high amperage conditions by breaking the common circuit within the motor, similar to the compressor internal overload. However, heat generated within the motor is faster to dissipate than the compressor, allow at least 45 minutes for the overload to reset, then retest.

WARNING

HIGH VOLTAGE!
Disconnect ALL power before servicing or installing this unit. Multiple power sources may be present. Failure to do so may cause property damage, personal injury or death.

1. Remove the motor leads from its respective connection points and capacitor (if applicable).
2. Check the continuity between each of the motor leads.
3. Touch one probe of the ohmmeter to the motor frame (ground) and the other probe in turn to each lead.

If the windings do not test continuous or a reading is obtained from lead to ground, replace the motor.

S-16D CHECKING EEM (ENERGY EFFICIENT MOTOR) MOTORS

Applies only to units with EEM Motors

The EEM Motor is a one piece, fully encapsulated, 3 phase brushless DC (single phase AC input) motor with ball bearing construction. Unlike the ECM 2.3/2.5 motors, the EEM features an integral control module.

Note: The GE TECMate will not currently operate the GE EEM motor.

1. Using a voltmeter, check for 230 volts to the motor connections L and N. If 230 volts is present, proceed to step 2. If 230 volts is not present, check the line voltage circuit to the motor.
2. Using a voltmeter, check for 24 volts from terminal C to either terminal 1, 2, 3, 4, or 5, depending on which tap is being used, at the motor. If voltage present, proceed to step 3. If no voltage, check 24 volt circuit to motor.
3. If voltage was present in steps 1 and 2, the motor has failed and will need to be replaced.

Note: When replacing motor, ensure the belly band is between the vents on the motor and the wiring has the proper drip loop to prevent condensate from entering the motor.

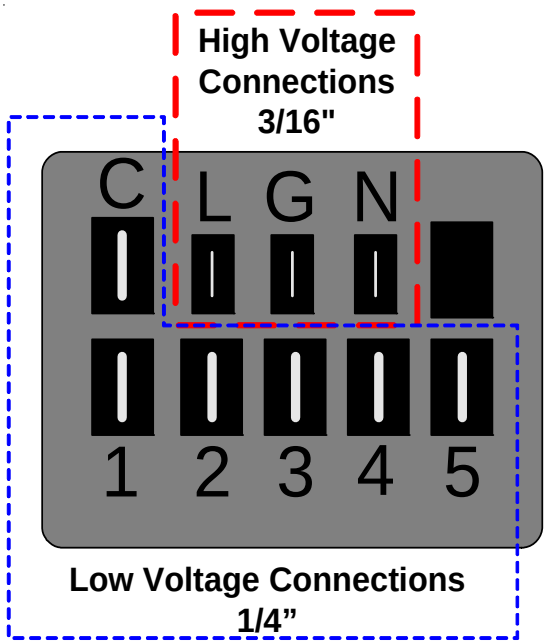

EEM MOTOR CONNECTIONS

SERVICING

S-17 CHECKING COMPRESSOR WINDINGS

WARNING

Hermetic compressor electrical terminal venting can be dangerous. When insulating material which supports a hermetic compressor or electrical terminal suddenly disintegrates due to physical abuse or as a result of an electrical short between the terminal and the compressor housing, the terminal may be expelled, venting the vapor and liquid contents of the compressor housing and system.

If the compressor terminal PROTECTIVE COVER and gasket (if required) are not properly in place and secured, there is a remote possibility if a terminal vents, that the vaporous and liquid discharge can be ignited, spouting flames several feet, causing potentially severe or fatal injury to anyone in its path.

This discharge can be ignited external to the compressor if the terminal cover is not properly in place and if the discharge impinges on a sufficient heat source.

Ignition of the discharge can also occur at the venting terminal or inside the compressor, if there is sufficient contaminant air present in the system and an electrical arc occurs as the terminal vents.

Ignition cannot occur at the venting terminal without the presence of contaminant air, and cannot occur externally from the venting terminal without the presence of an external ignition source.

Therefore, proper evacuation of a hermetic system is essential at the time of manufacture and during servicing.

To reduce the possibility of external ignition, all open flame, electrical power, and other heat sources should be extinguished or turned off prior to servicing a system.

S-17A RESISTANCE TEST

Each compressor is equipped with an internal overload.

The line break internal overload senses both motor amperage and winding temperature. High motor temperature or amperage heats the disc causing it to open, breaking the common circuit within the compressor on single phase units.

Heat generated within the compressor shell, usually due to recycling of the motor, high amperage or insufficient gas to cool the motor, is slow to dissipate. Allow at least three to four hours for it to cool and reset, then retest.

WARNING

HIGH VOLTAGE!
Disconnect ALL power before servicing or installing this unit. Multiple power sources may be present. Failure to do so may cause property damage, personal injury or death.

1. Remove the leads from the compressor terminals.

WARNING

See warnings S-17 before removing compressor terminal cover.

2. Using an ohmmeter, test continuity between terminals S-R, C-R, and C-S, on single phase units or terminals T1, T2 and T3, on 3 phase units.

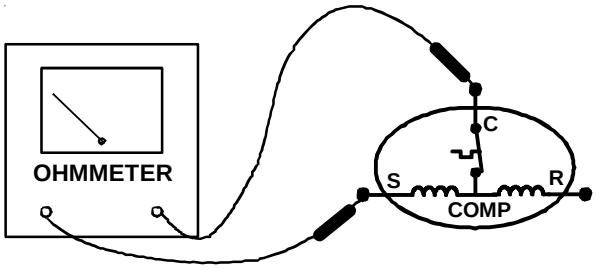

TESTING COMPRESSOR WINDINGS

If either winding does not test continuous, replace the compressor.

NOTE: If an open compressor is indicated, allow ample time for the internal overload to reset before replacing compressor.

S-17B GROUND TEST

If fuse, circuit breaker, ground fault protective device, etc., has tripped, this is a strong indication that an electrical problem exists and must be found and corrected. The circuit protective device rating must be checked, and its maximum rating should coincide with that marked on the equipment nameplate.

With the terminal protective cover in place, it is acceptable to replace the fuse or reset the circuit breaker ONE TIME ONLY to see if it was just a nuisance opening. If it opens again, DO NOT continue to reset.

WARNING

Disconnect ALL power before servicing.

Disconnect all power to unit, making sure that **all** power legs are open.

1. DO NOT remove protective terminal cover. Disconnect the three leads going to the compressor terminals at the nearest point to the compressor.
2. Identify the leads and using a Megger, Hi-Potential Ground Tester, or other suitable instrument which puts out a voltage between 300 and 1500 volts, check for a ground separately between each of the three leads and ground (such as an unpainted tube on the compressor). Do not use a low voltage output instrument such as a volt-ohmmeter.

SERVICING

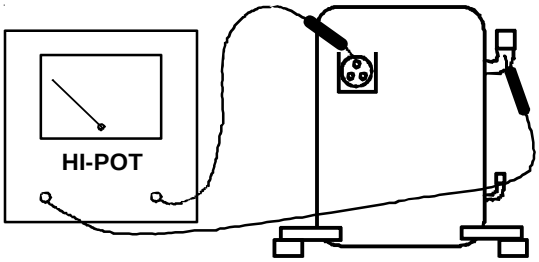

COMPRESSOR GROUND TEST

3. If a ground is indicated, then carefully remove the compressor terminal protective cover and inspect for loose leads or insulation breaks in the lead wires.
4. If no visual problems indicated, carefully remove the leads at the compressor terminals.

WARNING

Damage can occur to the glass embedded terminals if the leads are not properly removed. This can result in terminal and hot oil discharging.

Carefully retest for ground, directly between compressor terminals and ground.

5. If ground is indicated, replace the compressor.

S-17D OPERATION TEST

If the voltage, capacitor, overload and motor winding test fail to show the cause for failure:

WARNING

HIGH VOLTAGE!
Disconnect ALL power before servicing or installing this unit. Multiple power sources may be present. Failure to do so may cause property damage, personal injury or death.

1. Remove unit wiring from disconnect switch and wire a test cord to the disconnect switch.

NOTE: The wire size of the test cord must equal the line wire size and the fuse must be of the proper size and type.

2. With the protective terminal cover in place, use the three leads to the compressor terminals that were disconnected at the nearest point to the compressor and connect the common, start and run clips to the respective leads.
3. Connect good capacitors of the right MFD and voltage rating into the circuit as shown.
4. With power ON, close the switch.

WARNING

Line Voltage now present.

A. If the compressor starts and continues to run, the cause for failure is somewhere else in the system.

B. If the compressor fails to start - replace.

S-18 TESTING CRANKCASE HEATER (OPTIONAL ITEM)

Note: Not all compressors use crankcase heaters.
The crankcase heater must be energized a minimum of twenty-four (24) hours before the compressor is operated.

Crankcase heaters are used to prevent migration or accumulation of refrigerant in the compressor crankcase during the off cycles and prevents liquid slugging or oil pumping on start up. On some models, the crankcase heater is controlled by a crankcase heater thermostat that is wired in series with the crankcase heater.

A crankcase heater will not prevent compressor damage due to a floodback or over charge condition.

WARNING

Disconnect ALL power before servicing.

1. Disconnect the heater lead in wires.
2. Using an ohmmeter, check heater continuity - should test continuous. If not, replace.

S-18A CHECKING CRANKCASE HEATER THERMOSTAT

Note: Not all models with crankcase heaters will have a crankcase heater thermostat.

1. Install a thermocouple type temperature test lead on the discharge line adjacent to the crankcase heater thermostat.
2. Check the temperature at which the control closes its contacts by lowering the temperature of the control. The crankcase heater thermostat should close at 67°F ± 5°F.
3. Check the temperature at which the control opens its contacts by raising the temperature of the control. The crankcase heater thermostat should open at 85°F ± 5°F.
4. If not as above, replace control.

SERVICING

S-21 CHECKING REVERSING VALVE AND SOLENOID

Occasionally the reversing valve may stick in the heating or cooling position or in the mid-position.

When stuck in the mid-position, part of the discharge gas from the compressor is directed back to the suction side, resulting in excessively high suction pressure. An increase in the suction line temperature through the reversing valve can also be measured. Check operation of the valve by starting the system and switching the operation from COOLING to HEATING cycle.

If the valve fails to change its position, test the voltage (24V) at the valve coil terminals, while the system is on the COOLING cycle.

If no voltage is registered at the coil terminals, check the operation of the thermostat and the continuity of the connecting wiring from the "O" terminal of the thermostat to the unit.

If voltage is registered at the coil, tap the valve body lightly while switching the system from HEATING to COOLING, etc. If this fails to cause the valve to switch positions, remove the coil connector cap and test the continuity of the reversing valve solenoid coil. If the coil does not test continuous - replace it.

If the coil test continuous and 24 volts is present at the coil terminals, the valve is inoperative - replace it.

S-24 TESTING DEFROST CONTROL

To check the defrost control for proper sequencing, proceed as follows: With power ON; unit not running.

1. Jumper defrost thermostat by placing a jumper wire across the terminals "DFT" and "R" at defrost control board.
2. Connect jumper across test pins on defrost control board.
3. Set thermostat to call for heating. System should go into defrost within 21 seconds.
4. Immediately remove jumper from test pins.
5. Using VOM check for voltage across terminals "C & O". Meter should read 24 volts.
6. Using VOM check for voltage across fan terminals DF1 and DF2 on the board. You should read line voltage (208-230 VAC) indicating the relay is open in the defrost mode.
7. Using VOM check for voltage across "W2 & C" terminals on the board. You should read 24 volts.
8. If not as above, replace control board.
9. Set thermostat to off position and disconnect power before removing any jumpers or wires.

NOTE: Remove jumper across defrost thermostat before returning system to service.

S-25 TESTING DEFROST THERMOSTAT

1. Install a thermocouple type temperature test lead on the tube adjacent to the defrost control. Insulate the lead point of contact.
2. Check the temperature at which the control closes its contacts by lowering the temperature of the control. On 2 and 2.5 ton units, it should close at 34°F ± 5°F. On 3 thru 5 ton units, it should close at 31°F ± 3°F.
3. Check the temperature at which the control opens its contacts by raising the temperature of the control. On 2 and 2.5 ton units, it should open at 60°F ± 5°F. On 3 thru 5 ton units, it should open at 75°F ± 6°F.
4. If not as above, replace control.

TROUBLESHOOTING

THE FOLLOWING INFORMATION IS FOR USE BY QUALIFIED SERVICE AGENCY ONLY: OTHERS SHOULD NOT ATTEMPT TO SERVICE THIS EQUIPMENT.

Common Causes of Unsatisfactory Operation of Heat Pump on the Heating Cycle.

Inadequate Air Volume Through Indoor Coil

When a heat pump is in the heating cycle, the indoor coil is functioning as a condenser. The return air filter must always be clean, and sufficient air volume must pass through the indoor coil to prevent excessive discharge pressure, and high pressure cut out.

Outside Air into Return Duct

Do not introduce cold outside air into the return duct of a heat pump installation. For units with 2-speed motors, do not allow air entering the indoor coil to drop below 65° F. Air below this temperature will cause low discharge pressure, thus low suction pressure, and excessive defrost cycling resulting in low heating output. It may also cause false defrosting.

Undercharge

An undercharged heat pump on the heating cycle will cause low discharge pressure resulting in low suction pressure and frost accumulation on the outdoor coil.

Poor "Terminating" Sensor contact

The unit's defrost terminating sensor must make good thermal contact with the outdoor coil tubing. Poor contact may not terminate the unit's defrost cycle quickly enough to prevent the unit from cutting out on high discharge pressure.

Malfunctioning Reversing Valve - This may be due to:

1. **Solenoid not energized** - In order to determine if the solenoid is energized, touch the nut that holds the solenoid cover in place with a screwdriver. If the nut magnetically holds the screwdriver, the solenoid is energized and the unit is in the cooling cycle.
2. **No voltage at unit's solenoid** - Check unit voltage. If no voltage, check wiring circuit.

3. **Valve will not shift**:
   - **a. Undercharged** - check for leaks;
   - **b. Valve Body Damaged** - Replace valve;
   - **c. Unit Properly Charged** - If it is on the heating cycle, raise the discharge pressure by restricting airflow through the indoor coil. If the valve does not shift, tap it **lightly** on both ends with a screwdriver handle. **DO NOT TAP THE VALVE BODY**. If the unit is on the cooling cycle, raise the discharge pressure by restricting airflow through the outdoor coil. If the valve does not shift after the above attempts, cut the unit off and wait until the discharge and suction pressure equalize, and repeat above steps. If the valve does not shift, replace it.

S-50 CHECKING HEATER LIMIT CONTROL(S)

(OPTIONAL ELECTRIC HEATERS)

Each individual heater element is protected with an automatic rest limit control connected in series with each element to prevent overheating of components in case of low airflow. This limit control will open its circuit at approximately 150°F. to 160°F and close at approximately 110°F.

WARNING

Disconnect ALL power before servicing.

1. Remove the wiring from the control terminals.
2. Using an ohmmeter test for continuity across the normally closed contacts. No reading indicates the control is open - replace if necessary. Make sure the limits are cool before testing.

IF FOUND OPEN - REPLACE - DO NOT WIRE AROUND.

S-52 CHECKING HEATER ELEMENTS

Optional electric heaters may be added, in the quantities shown in the spec sheet for each model unit, to provide electric resistance heating. Under no condition shall more heaters than the quantity shown be installed.

WARNING

HIGH VOLTAGE!
Disconnect ALL power before servicing or installing this unit. Multiple power sources may be present. Failure to do so may cause property damage, personal injury or death.

1. Disassemble and remove the heating element(s).
2. Visually inspect the heater assembly for any breaks in the wire or broken insulators.
3. Using an ohmmeter, test the element for continuity - no reading indicates the element is open. Replace as necessary.

S-100 REFRIGERATION REPAIR PRACTICE

DANGER

Always remove the refrigerant charge in a proper manner before applying heat to the system.

When repairing the refrigeration system:

WARNING

Disconnect ALL power before servicing.

1. Never open a system that is under vacuum. Air and moisture will be drawn in.
2. Plug or cap all openings.
3. Remove all burrs and clean the brazing surfaces of the tubing with sand cloth or paper. Brazing materials do not flow well on oxidized or oily surfaces.
4. Clean the inside of all new tubing to remove oils and pipe chips.
5. When brazing, sweep the tubing with dry nitrogen to prevent the formation of oxides on the inside surfaces.
6. Complete any repair by replacing the liquid line drier in the system, evacuate and charge.

BRAZING MATERIALS

Copper to Copper Joints - Sil-Fos used without flux (alloy of 15% silver, 80% copper, and 5% phosphorous). Recommended heat 1400°F.

Copper to Steel Joints - Silver Solder used without a flux (alloy of 30% silver, 38% copper, 32% zinc). Recommended heat - 1200°F.

S-101 LEAK TESTING

(NITROGEN OR NITROGEN-TRACED)

WARNING

To avoid the risk of fire or explosion, never use oxygen, high pressure air or flammable gases for leak testing of a refrigeration system.

SERVICING

WARNING

To avoid possible explosion, the line from the nitrogen cylinder must include a pressure regulator and a pressure relief valve. The pressure relief valve must be set to open at no more than 150 psig.

Pressure test the system using dry nitrogen and soapy water to locate leaks. If you wish to use a leak detector, charge the system to 10 psi using the appropriate refrigerant then use nitrogen to finish charging the system to working pressure, then apply the detector to suspect areas. If leaks are found, repair them. After repair, repeat the pressure test. If no leaks exist, proceed to system evacuation.

S-102 EVACUATION

WARNING

REFRIGERANT UNDER PRESSURE!
Failure to follow proper procedures may cause property damage, personal injury or death.

This is the most important part of the entire service procedure. The life and efficiency of the equipment is dependent upon the thoroughness exercised by the serviceman when evacuating air (non-condensables) and moisture from the system.

Air in a system causes high condensing temperature and pressure, resulting in increased power input and reduced performance.

Moisture chemically reacts with the refrigerant oil to form corrosive acids. These acids attack motor windings and parts, causing breakdown.

The equipment required to thoroughly evacuate the system is a high vacuum pump, capable of producing a vacuum equivalent to 25 microns absolute and a thermocouple vacuum gauge to give a true reading of the vacuum in the system

NOTE: Never use the system compressor as a vacuum pump or run when under a high vacuum. Motor damage could occur.

WARNING

Do not front seat the service valve(s) with the compressor open, with the suction line of the comprssor closed or severely restricted.

1. Connect the vacuum pump, vacuum tight manifold set with high vacuum hoses, thermocouple vacuum gauge and charging cylinder as shown.
2. Start the vacuum pump and open the shut off valve to the high vacuum gauge manifold only. After the compound gauge (low side) has dropped to approximately 29 inches of vacuum, open the valve to the vacuum thermocouple gauge. See that the vacuum pump will blank-off to a maximum of 25 microns. A high vacuum pump can only produce a good vacuum if its oil is non-contaminated.

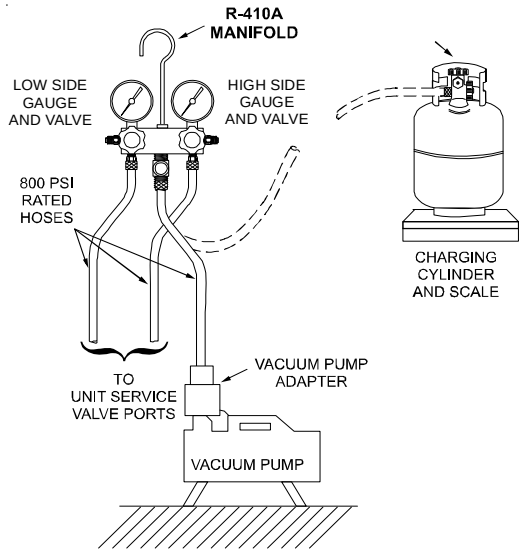

EVACUATION

3. If the vacuum pump is working properly, close the valve to the vacuum thermocouple gauge and open the high and low side valves to the high vacuum manifold set. With the valve on the charging cylinder closed, open the manifold valve to the cylinder.
4. Evacuate the system to at least 29 inches gauge before opening valve to thermocouple vacuum gauge.
5. Continue to evacuate to a maximum of 250 microns. Close valve to vacuum pump and watch rate of rise. If vacuum does not rise above 1500 microns in three to five minutes, system can be considered properly evacuated.
6. If thermocouple vacuum gauge continues to rise and levels off at about 5000 microns, moisture and non-condensables are still present. If gauge continues to rise a leak is present. Repair and re-evacuate.
7. Close valve to thermocouple vacuum gauge and vacuum pump. Shut off pump and prepare to charge.

S-103 CHARGING

WARNING

REFRIGERANT UNDER PRESSURE!
*** Do not overcharge system with refrigerant.**
*** Do not operate unit in a vacuum or at negative pressure.**
Failure to follow proper procedures may cause property damage, personal injury or death.

SERVICING

CAUTION

Only use refrigerant certified to AHRI standards. Used refrigerant may cause compressor damage. The manufacturer is not responsible for damage or the need for repairs resulting from the use of unapproved refrigerant typesor used or recycled refrigerant. Most portable machines cannot clean used refrigerant to meet AHRI standards.

Charge the system with the exact amount of refrigerant.

Refer to the specification section or check the unit nameplates for the correct refrigerant charge.

An inaccurately charged system will cause future problems.

1. Using a quality set of charging scales, weigh the proper amount of refrigerant for the system. Allow liquid refrigerant only to enter the high side.
2. After the system will take all it will take, close the valve on the high side of the charging manifold.
3. Start the system and charge the balance of the refrigerant through the low side.

NOTE: R410A should be drawn out of the storage container or drum in liquid form due to its fractionation properties, but should be "Flashed" to its gas state before entering the system. There are commercially available restriction devices that fit into the system charging hose set to accomplish this. **DO NOT** charge liquid R410A into the compressor.

4. With the system still running, close the valve on the charging cylinder. At this time, you may still have some liquid refrigerant in the charging cylinder hose and will definitely have liquid in the liquid hose. Reseat the liquid line core. Slowly open the high side manifold valve and transfer the liquid refrigerant from the liquid line hose and charging cylinder hose into the suction service valve port. CAREFUL: Watch so that liquid refrigerant does not enter the compressor.

Final Charge Adjustment

The outdoor temperature must be 60°F or higher. Set the room thermostat to COOL, fan switch to AUTO, and set the temperature control well below room temperature.

After system has stabilized per startup instructions, compare the operating pressures and outdoor unit amp draw to the numbers listed in the spec sheet manual. If pressures and amp draw are too low, add charge. If pressures and amp draw are too high, remove charge. Check subcooling and superheat as detailed in the following section.

5. With the system still running, remove hose and reinstall both valve caps.
6. Check system for leaks.

Due to their design, Scroll compressors are inherently more tolerant of liquid refrigerant.

NOTE: *Even though the compressor section of a Scroll compressor is more tolerant of liquid refrigerant, continued floodback or flooded start conditions may wash oil from the bearing surfaces causing premature bearing failure.* S-104 CHECKING COMPRESSOR EFFICIENCY

The reason for compressor inefficiency is broken or damaged suction and/or discharge valves, or scroll flanks on Scroll compressors, reducing the ability of the compressor to pump refrigerant vapor.

The condition of the valves or scroll flanks is checked in the following manner.

1. Attach gauges to the high and low side of the system.
2. Start the system and run a Cooling Performance Test.

If the test shows-

⇒ Below normal high side pressure.

⇒ Above normal low side pressure.

⇒ Low temperature difference across coil.

⇒ Low amp draw at compressor.

-and the charge is correct. The compressor is faulty - replace the compressor.

S-104 CHECKING COMPRESSOR EFFICIENCY

The reason for compressor inefficiency is broken or damaged scroll flanks on Scroll compressors, reducing the ability of the compressor to pump refrigerant vapor.

During the "OFF" cycle, the high side pressure bleeds to the low side through the fixed orifice restriction device. Check equalization time as follows:

1. Attach a gauge manifold to the suction and liquid line dill valves.
2. Start the system and allow the pressures to stabilize.
3. Stop the system and check the time it takes for the high and low pressure gauge readings to equalize.

If it takes more than seven (7) minutes to equalize, the restrictor device is inoperative. Replace, install a liquid line drier, evacuate and recharge.

S-106 OVERFEEDING

Overfeeding by the expansion valve results in high suction pressure, cold suction line, and possible liquid slugging of the compressor.

If these symptoms are observed:

1. Check for an overcharged unit by referring to the cooling performance charts in the spec sheet manual.
2. Check the operation of the power element in the valve as explained in S-110 Checking Expansion Valve Operation.
3. Check for restricted or plugged equalizer tube.

SERVICING

S-108 SUPERHEAT

CHECKING SUPERHEAT

Refrigerant gas is considered superheated when its temperature is higher than the saturation temperature corresponding to its pressure. The degree of superheat equals the degrees of temperature increase above the saturation temperature at existing pressure. See Temperature - Pressure Chart .

CAUTION

To prevent personal injury, carefully connect and disconnect manifold gauge hoses. Escaping liquid refrigerant can cause burns. Do not vent refrigerant to atmosphere. Recover during system repair or final unit disposal.

1. Run system at least 10 minutes to allow pressure to stabilize.
2. Temporarily install thermometer on suction (large) line near compressor with adequate contact and insulate for best possible reading.
3. Refer to the superheat table provided for proper system superheat. Add charge to lower superheat or recover charge to raise superheat.

Superheat Formula = Suct. Line Temp. - Sat. Suct. Temp.

Ambient Condenser Inlet Temp (°F Drybulb)	Return Air Temp. (°F Drybulb)				
	65	70	75	80	85
100	---	---	---	10	10
95	---	---	10	10	10
90	---	---	12	15	18
85	---	10	13	17	20
80	---	10	15	21	26
75	10	13	17	25	29
70	10	17	20	28	32
65	13	19	26	32	35
60	17	25	30	33	37

SYSTEM SUPERHEAT

EXAMPLE:

a. Suction Pressure = 143
b. Corresponding Temp. °F. = 50
c. Thermometer on Suction Line = 59°F.

To obtain the degrees temperature of superheat, subtract 50.0 from 59.0°F.

The difference is 9° Superheat. The 9° Superheat would fall in the ± range of allowable superheat.

S-109 CHECKING SUBCOOLING

Refrigerant liquid is considered subcooled when its temperature is lower than the saturation temperature corresponding to its pressure. The degree of subcooling equals the degrees of temperature decrease below the saturation temperature at the existing pressure.

1. Attach an accurate thermometer or preferably a thermocouple type temperature tester to the liquid line close to the pressure switch.
2. Install a high side pressure gauge on the high side (liquid) service valve at the front of the unit.
3. Record the gauge pressure and the temperature of the line.
4. Compare the hi-pressure reading to the "Required Liquid Line Temperature" chart on the preceding page. Find the hi-pressure value on the left column. Follow that line right to the column under the design subcooling value. Where the two intersect is the required liquid line temperature.

   Alternately you can convert the liquid line pressure gauge reading to temperature by finding the gauge reading in Temperature - Pressure Chart and reading to the left, find the temperature in the °F. Column.
5. The difference between the thermometer reading and pressure to temperature conversion is the amount of subcooling.

Add charge to raise subcooling. Recover charge to lower subcooling.

Subcooling Formula = Sat. Liquid Temp. - Liquid Line Temp.

EXAMPLE:

a. Liquid Line Pressure = 417
b. Corresponding Temp. °F. = 120°
c. Thermometer on Liquid line = 109°F.

To obtain the amount of subcooling, subtract 109°F from 120°F.

The difference is 11° subcooling. See the specification sheet manual for the design subcooling range for your unit.

See R410A Pressure vs. Temperature chart.

S-110 CHECKING EXPANSION VALVE OPERATION

1. Remove the remote bulb of the expansion valve from the suction line.
2. Start the system and cool the bulb in a container of ice water, closing the valve. As you cool the bulb, the suction pressure should fall and the suction temperature will rise.
3. Next warm the bulb in your hand. As you warm the bulb, the suction pressure should rise and the suction temperature will fall.
4. If a temperature or pressure change is noticed, the expansion valve is operating. If no change is noticed, the valve is restricted, the power element is faulty, or the equalizer tube is plugged.
5. Capture the charge, replace the valve and drier, evacuate and recharge.

SERVICING

Pressure vs. Temperature Chart													
R-410A													
PSIG	°F	PSIG	°F	PSIG	°F	PSIG	°F	PSIG	°F	PSIG	°F
12	-37.7	114.0	37.8	216.0	74.3	318.0	100.2	420.0	120.7	522.0	137.6
14	-34.7	116.0	38.7	218.0	74.9	320.0	100.7	422.0	121.0	524.0	137.9
16	-32.0	118.0	39.5	220.0	75.5	322.0	101.1	424.0	121.4	526.0	138.3
18	-29.4	120.0	40.5	222.0	76.1	324.0	101.6	426.0	121.7	528.0	138.6
20	-36.9	122.0	41.3	224.0	76.7	326.0	102.0	428.0	122.1	530.0	138.9
22	-24.5	124.0	42.2	226.0	77.2	328.0	102.4	430.0	122.5	532.0	139.2
24	-22.2	126.0	43.0	228.0	77.8	330.0	102.9	432.0	122.8	534.0	139.5
26	-20.0	128.0	43.8	230.0	78.4	332.0	103.3	434.0	123.2	536.0	139.8
28	-17.9	130.0	44.7	232.0	78.9	334.0	103.7	436.0	123.5	538.0	140.1
30	-15.8	132.0	45.5	234.0	79.5	336.0	104.2	438.0	123.9	540.0	140.4
32	-13.8	134.0	46.3	236.0	80.0	338.0	104.6	440.0	124.2	544.0	141.0
34	-11.9	136.0	47.1	238.0	80.6	340.0	105.1	442.0	124.6	548.0	141.6
36	-10.1	138.0	47.9	240.0	81.1	342.0	105.4	444.0	124.9	552.0	142.1
38	-8.3	140.0	48.7	242.0	81.6	344.0	105.8	446.0	125.3	556.0	142.7
40	-6.5	142.0	49.5	244.0	82.2	346.0	106.3	448.0	125.6	560.0	143.3
42	-4.5	144.0	50.3	246.0	82.7	348.0	106.6	450.0	126.0	564.0	143.9
44	-3.2	146.0	51.1	248.0	83.3	350.0	107.1	452.0	126.3	568.0	144.5
46	-1.6	148.0	51.8	250.0	83.8	352.0	107.5	454.0	126.6	572.0	145.0
48	0.0	150.0	52.5	252.0	84.3	354.0	107.9	456.0	127.0	576.0	145.6
50	1.5	152.0	53.3	254.0	84.8	356.0	108.3	458.0	127.3	580.0	146.2
52	3.0	154.0	54.0	256.0	85.4	358.0	108.8	460.0	127.7	584.0	146.7
54	4.5	156.0	54.8	258.0	85.9	360.0	109.2	462.0	128.0	588.0	147.3
56	5.9	158.0	55.5	260.0	86.4	362.0	109.6	464.0	128.3	592.0	147.9
58	7.3	160.0	56.2	262.0	86.9	364.0	110.0	466.0	128.7	596.0	148.4
60	8.6	162.0	57.0	264.0	87.4	366.0	110.4	468.0	129.0	600.0	149.0
62	10.0	164.0	57.7	266.0	87.9	368.0	110.8	470.0	129.3	604.0	149.5
64	11.3	166.0	58.4	268.0	88.4	370.0	111.2	472.0	129.7	608.0	150.1
66	12.6	168.0	59.0	270.0	88.9	372.0	111.6	474.0	130.0	612.0	150.6
68	13.8	170.0	59.8	272.0	89.4	374.0	112.0	476.0	130.3	616.0	151.2
70	15.1	172.0	60.5	274.0	89.9	376.0	112.4	478.0	130.7	620.0	151.7
72	16.3	174.0	61.1	276.0	90.4	378.0	112.6	480.0	131.0	624.0	152.3
74	17.5	176.0	61.8	278.0	90.9	380.0	113.1	482.0	131.3	628.0	152.8
76	18.7	178.0	62.5	280.0	91.4	382.0	113.5	484.0	131.6	632.0	153.4
78	19.8	180.0	63.1	282.0	91.9	384.0	113.9	486.0	132.0	636.0	153.9
80	21.0	182.0	63.8	284.0	92.4	386.0	114.3	488.0	132.3	640.0	154.5
82	22.1	184.0	64.5	286.0	92.8	388.0	114.7	490.0	132.6	644.0	155.0
84	23.2	186.0	65.1	288.0	93.3	390.0	115.0	492.0	132.9	648.0	155.5
86	24.3	188.0	65.8	290.0	93.8	392.0	115.5	494.0	133.3	652.0	156.1
88	25.4	190.0	66.4	292.0	94.3	394.0	115.8	496.0	133.6	656.0	156.6
90	26.4	192.0	67.0	294.0	94.8	396.0	116.2	498.0	133.9	660.0	157.1
92	27.4	194.0	67.7	296.0	95.2	398.0	116.6	500.0	134.0	664.0	157.7
94	28.5	196.0	68.3	298.0	95.7	400.0	117.0	502.0	134.5	668.0	158.2
96	29.5	198.0	68.9	300.0	96.2	402.0	117.3	504.0	134.8	672.0	158.7
98	30.5	200.0	69.5	302.0	96.6	404.0	117.7	506.0	135.2	676.0	159.2
100	31.2	202.0	70.1	304.0	97.1	406.0	118.1	508.0	135.5	680.0	159.8
102	32.2	204.0	70.7	306.0	97.5	408.0	118.5	510.0	135.8	684.0	160.3
104	33.2	206.0	71.4	308.0	98.0	410.0	118.8	512.0	136.1	688.0	160.8
106	34.1	208.0	72.0	310.0	98.4	412.0	119.2	514.0	136.4	692.0	161.3
108	35.1	210.0	72.6	312.0	98.9	414.0	119.6	516.0	136.7	696.0	161.8
110	35.5	212.0	73.2	314.0	99.3	416.0	119.9	518.0	137.0		
112	36.9	214.0	73.8	316.0	99.7	418.0	120.3	520.0	137.3		

*Based on ALLIED SIGNAL Data

REQUIRED LIQUID LINE TEMPERATURE						
LIQUID PRESSURE AT ACCESS FITTING (PSIG)	REQUIRED SUBCOOLING TEMPERATURE (°F)					
	8	10	12	14	16	18
189	58	56	54	52	50	48
195	60	58	56	54	52	50
202	62	60	58	56	54	52
208	64	62	60	58	56	54
215	66	64	62	60	58	56
222	68	66	64	62	60	58
229	70	68	66	64	62	60
236	72	70	68	66	64	62
243	74	72	70	68	66	64
251	76	74	72	70	68	66
259	78	76	74	72	70	68
266	80	78	76	74	72	70
274	82	80	78	76	74	72
283	84	82	80	78	76	74
291	86	84	82	80	78	76
299	88	86	84	82	80	78
308	90	88	86	84	82	80
317	92	90	88	86	84	82
326	94	92	90	88	86	84
335	96	94	92	90	88	86
345	98	96	94	92	90	88
354	100	98	96	94	92	90
364	102	100	98	96	94	92
374	104	102	100	98	96	94
384	106	104	102	100	98	96
395	108	106	104	102	100	98
406	110	108	106	104	102	100
416	112	110	108	106	104	102
427	114	112	110	108	106	104
439	116	114	112	110	108	106
450	118	116	114	112	110	108
462	120	118	116	114	112	110
474	122	120	118	116	114	112
486	124	122	120	118	116	114
499	126	124	122	120	118	116
511	128	126	124	122	120	118

SERVICING

S-111 FIXED ORIFICE RESTRICTION DEVICES

The fixed orifice restriction device (flowrator) used in conjunction with the indoor coil is a predetermined bore (I.D.).

It is designed to control the rate of liquid refrigerant flow into an evaporator coil.

The amount of refrigerant that flows through the fixed orifice restriction device is regulated by the pressure difference between the high and low sides of the system.

In the cooling cycle when the outdoor air temperature rises, the high side condensing pressure rises. At the same time, the cooling load on the indoor coil increases, causing the low side pressure to rise, but at a slower rate.

Since the high side pressure rises faster when the temperature increases, more refrigerant flows to the evaporator, increasing the cooling capacity of the system.

When the outdoor temperature falls, the reverse takes place. The condensing pressure falls, and the cooling loads on the indoor coil decreases, causing less refrigerant flow.

If a restriction should become evident, proceed as follows:

1. Recover refrigerant charge.
2. Remove the orifice assembly and clean or replace.
3. Replace liquid line drier, evacuate and recharge.

CHECKING EQUALIZATION TIME

During the "OFF" cycle, the high side pressure bleeds to the low side through the fixed orifice restriction device. Check equalization time as follows:

1. Attach a gauge manifold to the suction and liquid line dill valves
2. Start the system and allow the pressures to stabilize.
3. Stop the system and check the time it takes for the high and low pressure gauge readings to equalize.

If it takes more than seven (7) minutes to equalize, the restriction device is inoperative. Replace, install a liquid line drier, evacuate and recharge.

S-112 CHECKING RESTRICTED LIQUID LINE

When the system is operating, the liquid line is warm to the touch. If the liquid line is restricted, a definite temperature drop will be noticed at the point of restriction. In severe cases, frost will form at the restriction and extend down the line in the direction of the flow.

Discharge and suction pressures will be low, giving the appearance of an undercharged unit. However, the unit will have normal to high subcooling.

Locate the restriction, replace the restricted part, replace drier, evacuate and recharge.

S-113 OVERCHARGE OF REFRIGERANT

An overcharge of refrigerant is normally indicated by an excessively high head pressure.

An evaporator coil, using an expansion valve metering device, will basically modulate and control a flooded evaporator and prevent liquid refrigerant return to the compressor.

An evaporator coil, using a fixed orifice restrictor device (flowrator) metering device, could allow liquid refrigerant to return to the compressor under extreme overcharge conditions.

Also with a fixed orifice restrictor device (flowrator) metering device, extreme cases of insufficient indoor air can cause icing of the indoor coil and liquid refrigerant return to the compressor, but the head pressure would be lower.

There are other causes for high head pressure which may be found in the "Service Problem Analysis Guide."

If other causes check out normal, an overcharge or a system containing non-condensables would be indicated.

If this system is observed:

1. Start the system.
2. Remove and capture small quantities of refrigerant as from the suction line access fitting until the head pressure is reduced to normal.
3. Observe the system while running a cooling performance test. If a shortage of refrigerant is indicated, then the system contains non-condensables.

S-114 NON-CONDENSABLES

If non-condensables are suspected, shut down the system and allow the pressures to equalize. Wait at least 15 minutes. Compare the pressure to the temperature of the coldest coil since this is where most of the refrigerant will be. If the pressure indicates a higher temperature than that of the coil temperature, non-condensables are present.

Non-condensables are removed from the system by first removing the refrigerant charge, replacing and/or installing liquid line drier, evacuating and recharging.

S-115 COMPRESSOR BURNOUT

When a compressor burns out, high temperature develops causing the refrigerant, oil and motor insulation to decompose forming acids and sludge.

If a compressor is suspected of being burned-out, attach a refrigerant hose to the liquid line dill valve and properly remove and dispose of the refrigerant.

NOTICE

Violation of EPA regulations may result in fines or other penalties.

Now determine if a burn out has actually occurred. Confirm by analyzing an oil sample using a Sporlan Acid Test Kit, AK-3 or its equivalent.

Remove the compressor and obtain an oil sample from the suction stub. If the oil is not acidic, either a burnout has not occurred or the burnout is so mild that a complete clean-up is not necessary.

SERVICING

If acid level is unacceptable, the system must be cleaned by using the clean-up drier method.

CAUTION

Do not allow the sludge or oil to contact the skin. Severe burns may result.

NOTE: Daikin does **NOT** approve the flushing method using R-11 refrigerant.

Suction Line Drier Clean-Up Method

The POE oils used with R410A refrigerant is an excellent solvent. In the case of a burnout, the POE oils will remove any burnout residue left in the system. If not captured by the refrigerant filter, they will collect in the compressor or other system components, causing a failure of the replacement compressor and/or spread contaminants throughout the system, damaging additional components.

The suction line filter drier should be installed as close to the compressor suction fitting as possible. The filter must be accessible and be rechecked for a pressure drop after the system has operated for a time. It may be necessary to use new tubing and form as required.

NOTE: At least twelve (12) inches of the suction line immediately out of the compressor stub must be discarded due to burned residue and contaminates.

1. Remove the liquid line drier and expansion valve.
2. Purge all remaining components with dry nitrogen or carbon dioxide until clean.
3 Install new components **including** liquid line drier.
4. Braze all joints, leak test, evacuate, and recharge system.
5. Start up the unit and record the pressure drop across the drier.
6. Continue to run the system for a minimum of twelve (12) hours and recheck the pressure drop across the drier. Pressure drop should not exceed 6 PSIG.
7. Continue to run the system for several days, repeatedly checking pressure drop across the suction line drier. If the pressure drop never exceeds the 6 PSIG, the drier has trapped the contaminants. Remove the suction line drier from the system.
8. If the pressure drop becomes greater, then it must be replaced and steps 5 through 9 repeated until it does not exceed 6 PSIG.

NOTICE: Regardless, the cause for burnout must be determined and corrected before the new compressor is started.

S-200 CHECKING EXTERNAL STATIC PRESSURE

The minimum and maximum allowable duct static pressure is found in the Spec Sheet Manual.

Too great of an external static pressure will result in insufficient air that can cause icing of the coil, whereas too much air can cause poor humidity control, and condensate to be pulled off the evaporator coil causing condensate leakage. Too much air can cause motor overloading and in many cases this constitutes a poorly designed system. To determine proper air movement, proceed as follows:

1. Using a draft gauge (inclined manometer) measure the static pressure of the return duct at the inlet of the unit, (Negative Pressure).

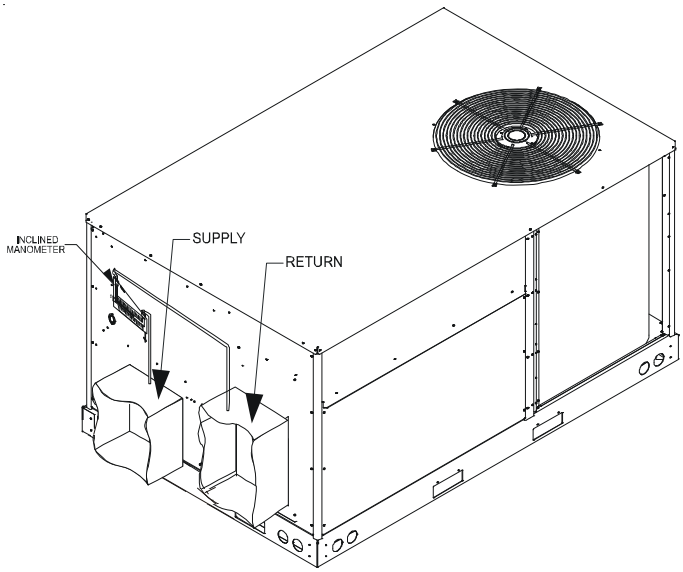

TOTAL EXTERNAL STATIC

2. Measure the static pressure of the supply duct, (Positive Pressure).
3. Add the two readings together.

NOTE: Both readings may be taken simultaneously and read directly on the manometer if so desired.

4. Consult proper table for quantity of air.

If the external static pressure exceeds the minimum or maximum allowable statics, check for closed dampers, dirty filters, undersized or poorly laid out ductwork.

S-201 CHECKING TEMPERATURE RISE

Temperature rise is related to the BTUH output of the unit and the amount of air (CFM) circulated over the heat exchanger.

All units are designed for a given range of temperature increase. This is the temperature of the air leaving the unit minus the temperature of the air entering the unit.

The more air (CFM) being delivered through a given unit the less the rise will be; so the less air (CFM) being delivered, the greater the rise. The temperature rise should be adjusted in accordance to a given unit specifications and its external static pressure.

SERVICING

1. Check BTUH input to unit do not exceed input rating stamped on rating plate.
2. Take entering and leaving air temperatures.
3. Select the proper speed tap or dip switch setting for direct drive units.
4. For gas heat units, the airflow must be adjusted so that the air temperature rise falls within the ranges given stated on Data Plate by adjusting the variable pitch sheave on the motor (see Blower Performance section in appropriate Spec Sheet Manual for correct pulley adjustment).
5. Take motor amperage draw to determine that the motor is not overloaded during adjustments.

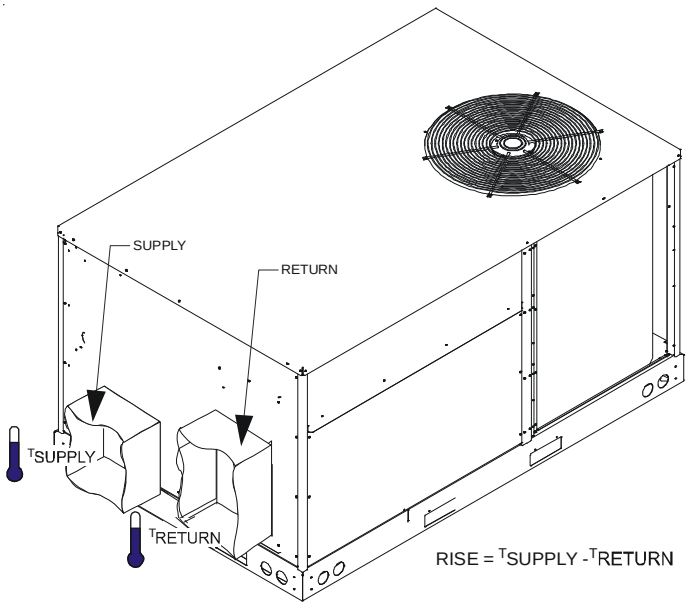

CHECKING TEMPERATURE RISE

S-205 CHECKING BELT TENSION

NOTE: Section on high static tables may require a field motor change.

BELT DRIVE MODELS ONLY

Tension and Alignment Adjustment

Check drive for adequate run-in belt tension. Correct belt tension is very important. A belt that is loose will have a substantially shorter life, and a belt that is too tight may cause premature motor and bearing failure. Correct belt tension on these units can be checked by measuring the force required to deflect the belt 1/8" at the midpoint of the span length (See DRIVE BELT TENSION ADJUSTMENT Figure). Belt tension force can be measured using a belt tension gauge, available through most belt manufacturers. The correct deflection force is 5 lbs. for a new belt and 3.5 lbs. for a belt that has been run in. New belt tension includes initial belt stretch.

When new V-belts are installed on a drive, the initial tension will drop rapidly during the first few hours. Check tension frequently during the first 24 hours of operation. Subsequent retensioning should fall between the minimum and maximum force. To determine the deflection distance from the normal position, use a straightedge or stretch a cord from sheave to sheave to use as a reference line. On multiple belt drives, an adjacent undeflected belt can be used as a reference.

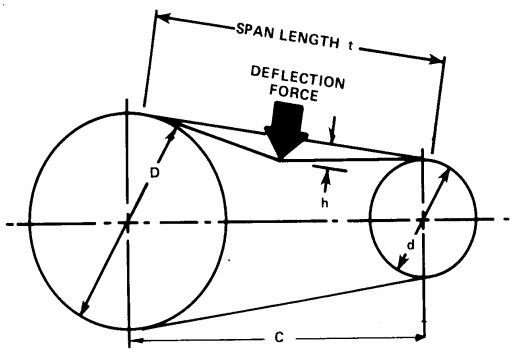

**Apply force to the center of the span.*

t = Span length, inches

C = Center distance, inches

D = Larger sheave diameter, inches

d = Smaller sheave diameter, inches

h = Deflection height, inches

DRIVE BELT TENSION ADJUSTMENT

3 - 6 TON MODELS

TYPE		SMALL SHEAVE DIAMETER (in)	DEFLECTION FORCE (lbs)		DEFLECTION (in)
BELT	DRIVE		USED	NEW	
AX	Standard	3.0 to 4.0	4.5 +/- 0.5	5.0 +/- 0.5	5/16 +/- 1/16

RECOMMENDED POUNDS OF FORCE PER BELT

S-206 INDOOR FAN ROTATION CHECK

Evaporator Fan Rotation Check (Three Phase Models Only)

Check that fan rotates counter-clockwise when viewed from the drive side of unit and in accordance with rotation arrow shown on blower housing. If it does not, reverse any two incoming power cables at Single Point Power Block. In this case, repeat bearing check.

Do not attempt to change load side wiring. Internal wiring assures all motors and compressors will rotate in correct direction once evaporator fan motor rotation check has been made.

SERVICING

S-207 MOTOR SHEAVE ADJUSTMENT

VL, VM, & 2VP VARIABLE PITCH KEY TYPE MOTOR SHEAVES

The driving and driven motor sheaves should be in alignment with each other and the shafts parallel.

VL & VM SHEAVES ADJUSTMENT

1. Loosen set screw “B” using a 5/32" Allen key.
2. Making half or full turns from closed position, adjust sheave pitch diameter for desired speed. DO NOT OPEN MORE THAN FIVE FULL TURNS.
3. Tighten set screw “B” securely over flat.
4. Carefully put on belts and adjust belt tension. DO NOT FORCE BELTS OVER GROOVES.
5. Ensure all keys are in place and the set screws tight before starting drive. Recheck set screws and belt tension after 24 hours service.

NOTE: Future adjustments should be made by loosening the belt tension and increasing or decreasing the pitch diameter of the sheave by half or full turns as required. Readjust belt tension before starting drive.

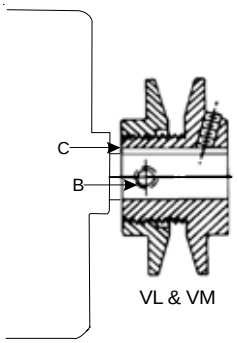

NOTE: Do **NOT** operate sheave with flange projecting beyond the hub end.

S-300 TESTING PRIMARY LIMIT CONTROL

DCG units use a snap-disk type primary limit device. Sometimes referred to as "stat on a stick". The limit setting is fixed and must not be readjusted in the field.

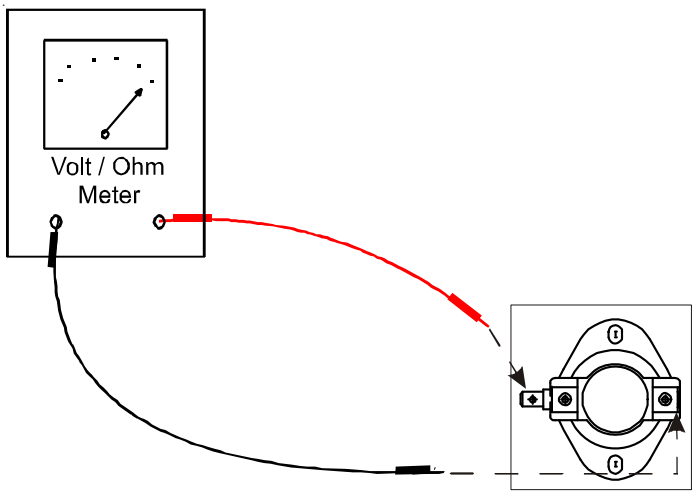

TESTING PRIMARY LIMIT CONTROL

Refer to the specification section to determine the proper limit cutout temperature for the model being serviced.

In all instances the limit control is wired in series with the ignition control.

If the temperature within the furnace should exceed this setting, the control will open, de-energizing the ignition control which in turn will open the electrical circuit to the gas valve.

The control will automatically reset when the temperature within the combustion chamber is sufficiently lowered.

WARNING

HIGH VOLTAGE!
Disconnect ALL power before servicing or installing this unit. Multiple power sources may be present. Failure to do so may cause property damage, personal injury or death.

1. Remove electrical power to unit. Some units may have more than one source of power.
2. Remove the wires from the limit control terminals.
3. Using an ohmmeter, test for continuity across the two terminals.
4. If limit test open allow unit to cool and retest.
5. If still open, replace the control.

S-301 TESTING AUXILIARY LIMIT

The auxiliary limit control is a preset nonadjustable control mounted in the blower compartment area.

It is connected in series with the rollout switch wiring to the gas valve. If its temperature should be exceeded, it will open, interrupting the voltage to the gas valve causing it to open.

An additional limit (primary limit) control is required for safety control of high temperature within the furnace or ductwork.

SERVICING

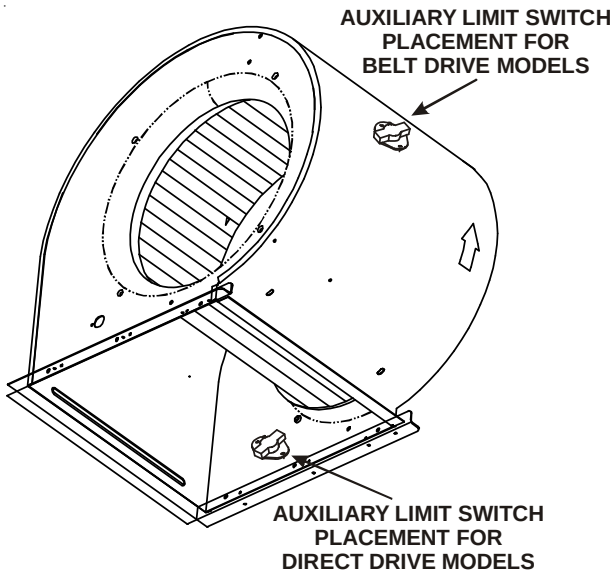

WARNING

HIGH VOLTAGE!
Disconnect ALL power before servicing or installing this unit. Multiple power sources may be present. Failure to do so may cause property damage, personal injury or death.

1. Remove the wires from the auxiliary limit control terminals.
2. Using an ohmmeter, test for continuity across the two terminals. No reading indicates the control is open. Push the red reset button, test again - if still open, replace the control.
3. If limit tests open, allow unit to cool and retest.
4. If still open, replace the control.

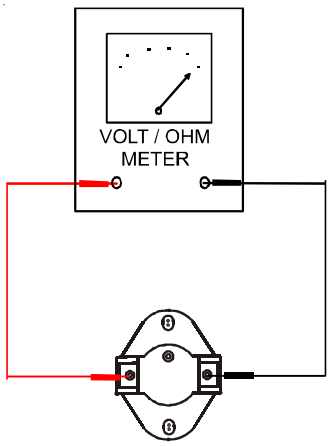

TESTING AUXILIARY LIMIT CONTROL

S-302 CHECKING FLAME ROLLOUT SWITCH

DCG units are equipped with a temperature-activated manual reset control. This control is mounted to the manifold assembly and is wired in series with the auxiliary limit and gas valve. The control is designed to open should a flame roll out occur. An over firing condition or flame impingement on the heat shield can also cause the control to open.

If the rollout control has opened, the circuit between the ignition control and gas valve will be interrupted and the ignition control module will go into lockout. The servicer should reset the ignition control by opening and closing the thermostat circuit. The servicer should look for the ignitor glowing which indicates there is power to the ignition control. The servicer should measure the voltage between each side of the rollout control and ground while the ignition control is try to power the gas valve.

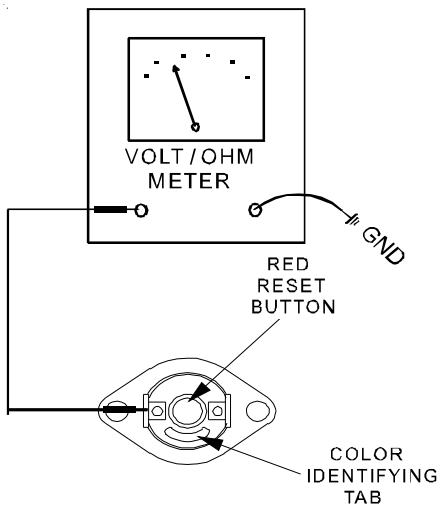

CHECKING FLAME ROLLOUT SWITCH

Limit Switch Operation (Applies to Primary, Auxiliary, and Roll Out Limits) DSI systems.

If a limit switch opens, the indoor blower is energized on heat speed and the induced draft blower is energized. The LED on the control flashes "4" to indicate an open limit switch. The blower and inducer remain on while the limit switch is open. The gas valve is de-energized. Power to the thermostat "R" is removed while the limit switch is open.

When the limit switch re-closes, the induced draft motor runs through its post purge and the indoor blower goes through the heat off delay.

If a call for heat exists when the limit switch re-closes, the control goes through a pre-purge period and then makes an ignition attempt. The indoor blower remains on (for the delay off time) during the re-ignition attempt.

1. If no voltage is measured on either side of control it indicates ignition control or wiring to control problem.
2. If voltage is measured on one side of the control and not the other, it indicates the control is open.

3. If voltage is measured on both sides of the control the wiring to gas valve or valve is at fault.

Servicing procedure with furnace not firing.

1. Confirm that the outer door was in place and all screws tightened. (No leaks under the door.)
2. Check to see if any damage was done to the furnace especially the wiring.
3. Confirm that heat exchanger is not obstructed by feeling for discharge air from the flue hood when the combustion blower is running but the unit is not firing.

If the above steps do not suggest the reason the control has tripped the furnace should be fired.

1. Remove the heating compartment door.
2. Turn of the power or open the thermostat circuit.
3. Reset the rollout control.
4. Turn power on and put the unit into a call for heating.

CAUTION

Flame rollout could occur. Keep face and hands a safe distance from burner area.

5. Look under the heat shield as the unit is running. Flames should be drawn into firing tubes.
   a. If only one burners flame is not drawn into the tube, that tube is restricted.
   b. If, without the air circulation blower running, all flames are not drawn into the tubes either the collector box, combustion blower, or flue outlet is obstructed. If the combustion blower or flue outlet is obstructed, the pressure switch should have opened preventing the unit from firing, also inspect the unit pressure switch and wiring.
   c. If the burner flame is not drawn into the tube only when the air circulation blower is running, then a cracked heat exchanger tube is present.

S-303 TESTING INDUCER MOTOR

WARNING

HIGH VOLTAGE!
Disconnect ALL power before servicing or installing this unit. Multiple power sources may be present. Failure to do so may cause property damage, personal injury or death.

1. Disconnect the motor wire leads from its connection point at integrated ignition control module.
2. Using and ohmmeter, test for continuity between each of the motor leads.
3. Touch one probe of the ohmmeter to the motor frame (ground) and the other probe in turn to each lead.

If the windings do not test continuous or a reading is obtained to ground, replace the motor.

4. After completing check and/or replacement of induced draft blower motor.
5. Turn on electrical power and verify proper unit operation.

S-304 TESTING GAS VALVE

Direct Spark Ignition (DSI) Systems

TWO STAGE MODELS ONLY: A two-stage combination redundant operator type gas valve which provides all manual and automatic control functions required for gas fired heating equipment is used.

The valve provides control of main burner gas flow, pressure regulation, and 100 percent safety shut-off.

WARNING

HIGH VOLTAGE!
Disconnect ALL power before servicing or installing this unit. Multiple power sources may be present. Failure to do so may cause property damage, personal injury or death.

1. Ensure gas valve and main gas supply are on.
2. Using a voltmeter, check from C and M on gas valve for 24 volts to gas valve.
3. If 24 volts are present and no gas flows through the valve, replace valve.

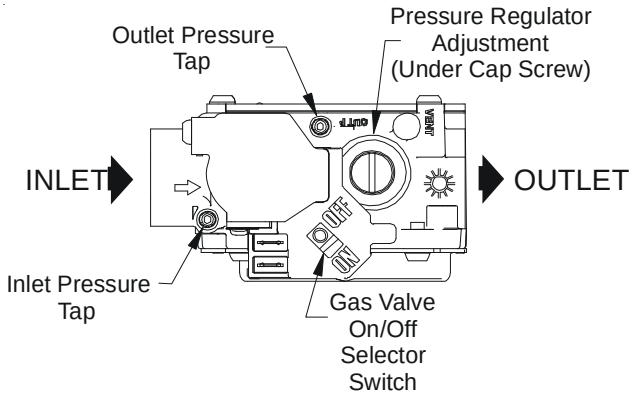

36G22

For use with DCG036045 ONLY.

SERVICING

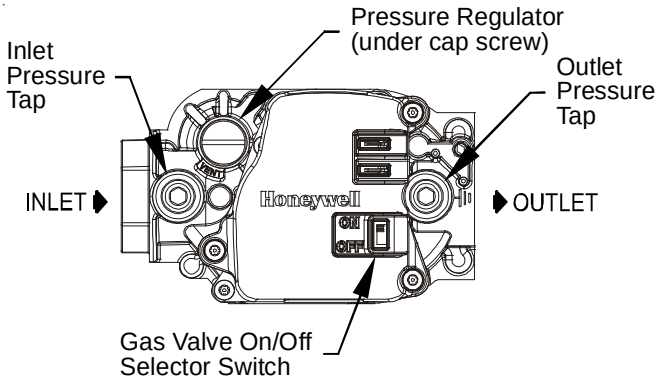

Honeywell VR81215 Single Stage

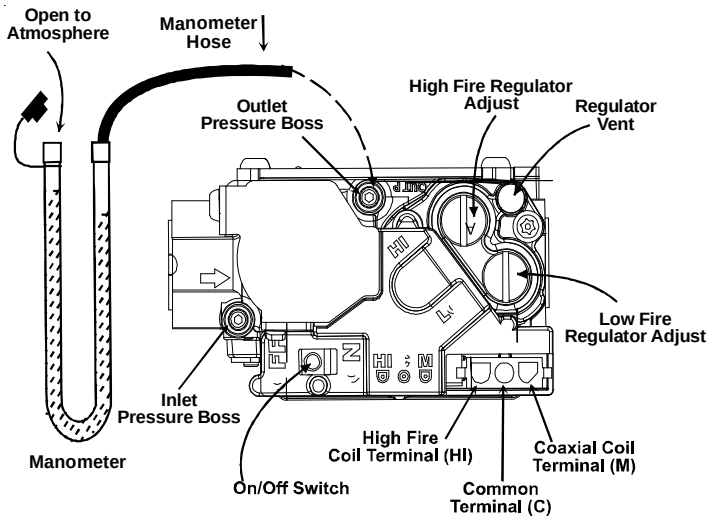

36G54

For use with all 3-5 ton BA revision models except DCG036045.

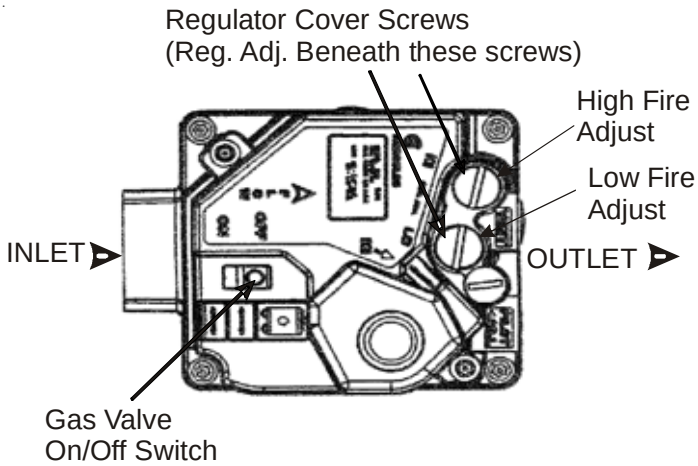

36H54

PRESSURE ADJUSTMENTS

S-305 CHECKING MAIN BURNERS

The main burners are used to provide complete combustion of various fuels in a limited space, and transfer this heat of the burning process to the heat exchanger.

Proper ignition, combustion, and extinction are primarily due to burner design, orifice sizing, gas pressure, primary and secondary air, vent and proper seating of burners.

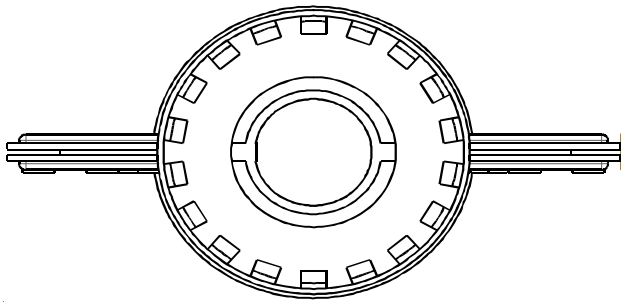

BECKETT BURNER

WARNING

Disconnect gas and electrical power supply.

In checking main burners, look for signs of rust, oversized and undersized carry-over ports restricted with foreign material, etc.

S-306 CHECKING ORIFICES

A predetermined fixed gas orifice is used in all of these furnaces. That is an orifice which has a fixed bore and position.

SERVICING

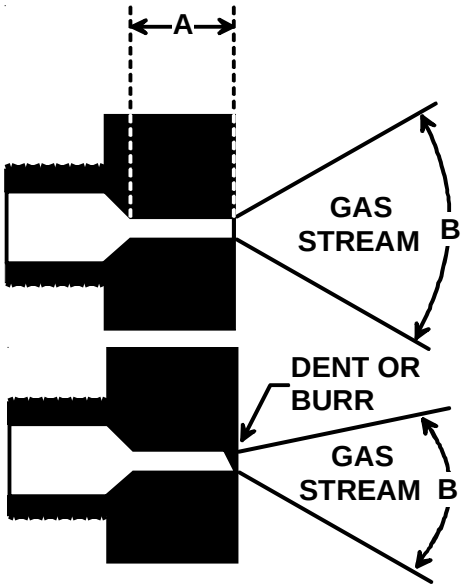

The length of Dimension "A" determines the angle of Gas Stream Defraction, "B".

A dent or burr will cause severe deflection of gas stream.

No resizing should be attempted until all factors are taken into consideration such as inlet manifold gas pressure, alignment, and positioning, specific gravity and BTU content of the gas being consumed.

The only time resizing is required is when a reduction in firing rate is required for an increase in altitude.

Orifices should be treated with care in order to prevent damage. They should be removed and installed with a box-end wrench in order to prevent distortion. In no instance should an orifice be peened over and redrilled. This will change the angle or deflection of the vacuum effect or entraining of primary air, which will make it difficult to adjust the flame properly. This same problem can occur if an orifice spud of a different length is substituted.

WARNING

Disconnect gas and electrical power supply.

1. Check orifice visually for distortion and/or burrs.
2. Check orifice size with orifice sizing drills.
3. If resizing is required, a new orifice of the same physical size and angle with proper drill size opening should be installed.

S-307 CHECKING GAS PRESSURE

Gas inlet and manifold pressures should be checked and adjusted in accordance to the type of fuel being consumed.

WARNING

Disconnect gas and electrical power supply.

1. Connect a water manometer or adequate gauge to the inlet pressure fitting of the gas valve.
2. Remove the pressure tap fitting at the manifold if provided or check at the gas valve outlet fitting and connect another manometer or gauge.

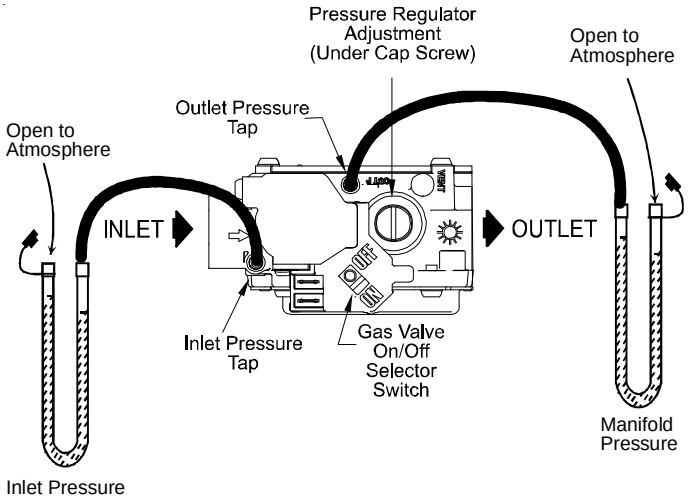

Single Stage 36G22

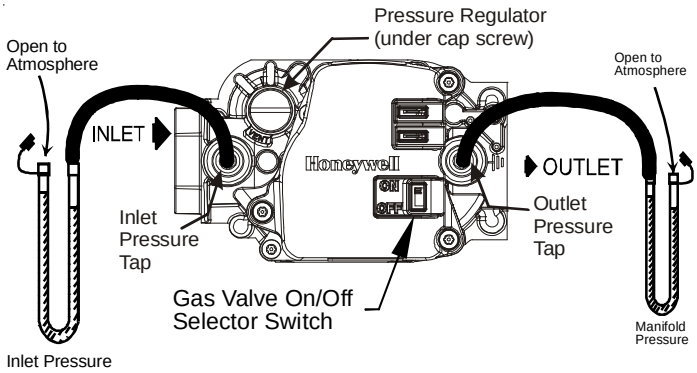

Honeywell VR81215 Single Stage

MEASURING INLET AND MANIFOLD GAS PRESSURE

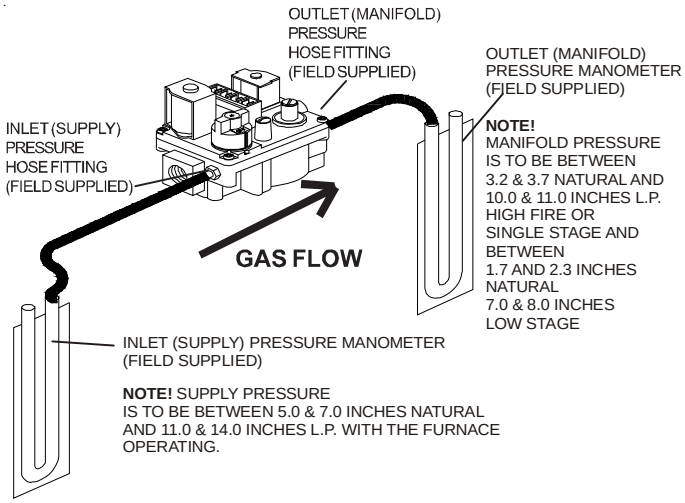

TWO-STAGE H VALVE

MEASURING INLET AND MANIFOLD GAS PRESSURE

With Power ON:

WARNING

Line Voltage now present.

3. Put unit into heating cycle and turn on all other gas consuming appliances.

SINGLE STAGE MODELS

For **NATURAL GAS:**

a. Inlet pressure should be a nominal 7" w.c.

b. Manifold pressure for single stage heat models and 2 stage heat models on low stage should be 2.0” w.c. ± .3"w.c.

c. Manifold pressure for single stage heat models and 2 stage heat models on high stage should be 3.5” ± .3"w.c.

For **PROPANE GAS:**

a. Inlet pressure should be a nominal 11" w.c.

b. Manifold pressure for 2 stage heating models on low stage should be 6" w.c.

c. Manifold pressure for single stage heat models and 2 stage heat models on high stage should be 10” w.c.

MANIFOLD GAS PRESSURE

2 Stage Heat Models

Gas		Range	Nominal
Natural	Low Stage	1.6 - 2.2" w.c.	2.0" w.c.
	High Stage	3.2 - 3.8" w.c.	3.5" w.c.
Propane	Low Stage	5.7 - 6.3" w.c.	6.0" w.c.
	High Stage	9.7 - 10.3" w.c.	10.0" w.c.

Single Stage Heat Models

Gas		Range	Nominal
Natural	Single Stage	3.2 - 3.8" w.c.	3.5" w.c.
Propane	Single Stage	9.7 - 10.3" w.c.	10.0" w.c.

If operating pressures differ from chart, make necessary pressure regulator adjustments, check piping size, etc., and/or consult with local utility.

S-308 CHECKING FOR DELAYED IGNITION

Delayed ignition is a delay in lighting a combustible mixture of gas and air which has accumulated in the combustion chamber.

When the mixture does ignite, it may explode and/or rollout causing burning in the burner venturi.

If delayed ignition should occur, the following should be checked:

1. Improper gas pressure - adjust to proper pressure. (See S-307)
2. Improper burner positioning - burners should be in locating slots, level front to rear and left to right.
3. Carry over (lighter tube or cross lighter) obstructed - clean.
4. Main burner orifice(s) deformed, or out of alignment to burner - replace.

S-309 CHECKING FOR FLASHBACK

Flashback will also cause burning in the burner venturi, but is caused by the burning speed being greater than the gas-air flow velocity coming from a burner port.

Flashback may occur at the moment of ignition, after a burner heats up or when the burner turns off. The latter is known as extinction pop.

Since the end results of flashback and delayed ignition can be the same (burning in the burner venturi) a definite attempt should be made to determine which has occurred.

If flashback should occur, check for the following:

1. Improper gas pressure - adjust to proper pressure. See S-307.
2. Check burner for proper alignment and/or replace burner.
3. Improper orifice size - check orifice for obstruction.

SERVICING

S-310 CHECKING PRESSURE CONTROL

A pressure control device is used to measure negative pressure at the induced draft blower motor inlet to detect a partial or blocked flue.

Pressure Switch Operation (DSI Direct Spark System)

The pressure switch is ignored unless there is a call for heat. When the control receives a call for heat, the control checks to see that the pressure switch is open. If the control sees that the pressure switch is closed before the induced draft blower is energized, the LED will flash a code of "2" (to indicate the pressure switch is stuck closed) and the inducer will remain off until the pressure switch opens.

If the pressure switch opens before the ignition period, the induced draft blower will remain on and the control will stay in pre-purge until the pressure switch is closed for an entire 15 second pre-purge period. The LED will flash a code of "3" to indicate open pressure switch.

If the pressure switch opens after the gas valve has been energized, the control will de-energize the gas valve and run the indoor blower through the heat off delay. The inducer stays on until the pressure switch re-closes. Then the control makes another ignition attempt.

WARNING

HIGH VOLTAGE!
Disconnect ALL power before servicing or installing this unit. Multiple power sources may be present. Failure to do so may cause property damage, personal injury or death.

1. Remove wires from the electrical terminals.
2. Using a VOM check from Common to NO (Normally Open) - should read open.

   If switch reads as noted proceed to Step 3, otherwise replace control.
3. Remove the pressure control hose from the control and interconnect with an inclined manometer as shown:

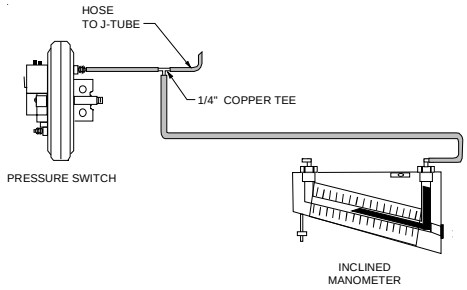

Reconnect wires to the Common and NO terminals.

With Power ON:

WARNING

Line Voltage now present.

4. Energize furnace for heating cycle. The induced draft blower motor will begin to run. The inclined manometer should read approximately -1.2" ± 0.3" W.C with no combustion.
5. Remove and check the two electrical wires and using the VOM check from Common to NO (Normally Open), it should read closed (with I.D. motor running). If not as above, replace pressure control.
6. Reconnect all wires to the control and place in heating cycle.
7. As the unit fires on high stage, the inclined manometer negative pressure will drop to -0.9" ± 0.3" W.C.
8. If not as listed, replace control.

Note: the pressure switch **must** be mounted with the diaphragm in a vertical position.

S-311 HIGH ALTITUDE APPLICATION

MPORTANT NOTE: The gas/electric units naturally derate with altitude. Do not attempt to increase the firing rate by changing orifices or increasing the manifold pressure. This can cause poor combustion and equipment failure. At all altitudes, the manifold pressure must be within 0.3 inches W.C. of that listed on the nameplate for the fuel used. At all altitudes and with either fuel, the air temperature rise must be within the range listed on the unit nameplate. Refer to the Installation Manual provided with the LP kit for conversion from natural gas to propane gas and for altitude adjustments.

When this package unit is installed at high altitude, the appropriate High Altitude orifice kit may be installed. As altitude increases, there is a natural reduction in the density of both the gas fuel and combustion air. This kit will provide the proper design certified input rate within the specified altitude range. High altitude kits are not approved for use in Canada. For installations above 2,000 feet, use kit HA-02. The HA-02 kit is used for both Natural and LP gas at high altitudes.

For DCG036045, use LPT-00A propane conversion kit for propane conversions at altitudes below 2000 feet. Natural gas installations below 2000 feet do not require a kit. For other revisions on 3, 4 and 5 ton models, use LPM-06.

For propane conversion above 2000 feet, high altitude kit HA-02 is required in addition to propane conversion kit LPT-00A or LPM-06.

SERVICING

INPUT/BURNER	HIGH ALTITUDE KIT	20,000 BTUH NAT/20,000 BTUH/L.P.							
		ELEVATION ABOVE SEA-LEVEL (FEET)							
		2000	3000	4000	4500	5000	6000	7000	8000
U.S. BURNER ORIFICE	HA-02	45/55	47/55	47/56	-	47/56	48/57	48/58	49/58
CANADA BURNER ORIFICE		45/55	-	-	48/57	-	-	-	-

INPUT/BURNER	HIGH ALTITUDE KIT	22,500 BTUH NAT/20,000 BTUH/L.P.							
		ELEVATION ABOVE SEA-LEVEL (FEET)							
		2000	3000	4000	4500	5000	6000	7000	8000
U.S. BURNER ORIFICE	HA-02	44/55	44/55	45/56	-	45/56	46/57	47/58	47/58
CANADA BURNER ORIFICE		44/55	-	-	47/57	-	-	-	-

INPUT/BURNER	HIGH ALTITUDE KIT	25,000 BTUH NAT/20,000 BTUH/L.P.							
		ELEVATION ABOVE SEA-LEVEL (FEET)							
		2000	3000	4000	4500	5000	6000	7000	8000
U.S. BURNER ORIFICE	HA-02	43/55	43/55	44/56	-	44/56	44/56	45/57	45/57
CANADA BURNER ORIFICE		43/55	-	-	46/57	-	-	-	-

S-313 TESTING IGNITION CONTROL MODULE

NOTE: Failure to earth ground the unit, reversing the neutral and hot wire connection to the line (polarity), or a high resistance connection in the ground or neutral lines may cause the control to lockout due to failure to detect flame.

WARNING

HIGH VOLTAGE
Wiring to this unit must be properly polarized and grounded. Disconnect ALL power before installing or servicing this unit. Multiple power sources may be present.

The ground wire must run from the unit all the way back to the electrical panel. Proper grounding can be confirmed by disconnecting the electrical power and measuring resistance between the neutral (white) connection and the burner closest to the flame sensor. Resistance should be less than 10 ohms.

DSI Direct Spark Ignition Systems

NORMAL SEQUENCE OF OPERATION (DSI Direct Spark Ignition System)

1. Thermostat calls for heat by energizing "W". The control checks the pressure switch for open condition. If the pressure switch is closed the control will flash code "3" and wait for the pressure switch to open.
2. The induced draft motor is energized and the control flashes code "2" and waits for the pressure switch to close. Once the pressure switch is closed, the LED stops flashing and the control begins timing the 15 second pre-purge.

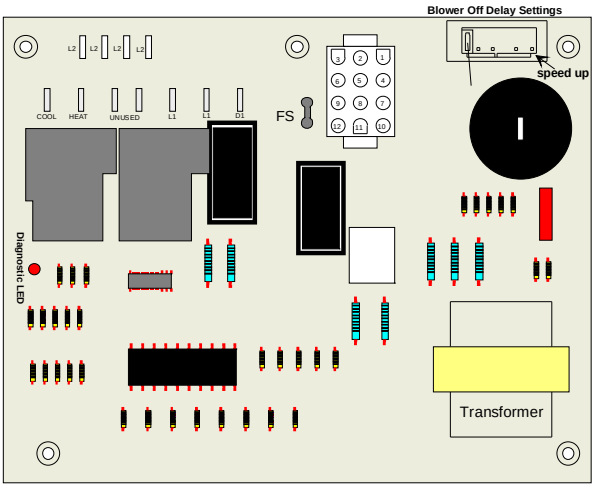

DSI Control Board

3. The control energizes the spark igniter and gas valve for 7 seconds. If flame is established, the control goes into a 30 second heat on delay.
4. The indoor blower is energized at the heat speed after a 30 second on delay.
5. The control monitors the safety circuit inputs, flame, and thermostat during operation.
6. When the thermostat is satisfied, the gas valve is de-energized and the induced draft blower remains on for a 29 second post purge. The indoor blower remains on for the selected heat blower off delay (90, 120, or 150 seconds). Indoor blower off timing begins when thermostat call for heat ends.

Testing Direct Spark Ignition (DSI) systems

Thermostat calling for heat (15 second prepurge time and 7 second trial for ignition).

1. Check for 230 VAC from L1 terminal of control module to L2. No voltage - check wire connections, continuity, etc.
2. Check for 24 VAC at "R" to "C" thermostat terminals.
   a. No voltage - check 3 amp automotive type fuse on control board. A blown fuse would indicate a short in the 24 VAC circuit (thermostat or limit circuit).
   b. Voltage Present - check limit, auxiliary limit and rollout (S-300, S-301 and S-302). If limit, auxiliary limit and rollout are closed, then check for 24 VAC at the gas valve terminals.

      No 24 VAC at gas valve - replace Control board.

SERVICING

TROUBLESHOOTING

IGNITION CONTROL ERROR CODES

The following presents probable causes of questionable unit operation. Refer to *Diagnostic Indicator Chart* for an interpretation of the signal and to this section for an explanation.

Remove the control box access panel and note the number of diagnostic LED flashes. Refer to *Diagnostic Indicator Chart* for an interpretation of the signal and to this section for an explanation.

Internal Control Failure

If the integrated ignition control in this unit encounters an internal fault, it will go into a "hard" lockout and turn off the diagnostic LED. If diagnostic LED indicates an internal fault, check power supply to unit for proper voltage, check all fuses, circuit breakers and wiring. Disconnect electric power for five seconds. If LED remains off after restoring power, replace control.

ABNORMAL OPERATION - HEATING CODES

External Lockout (1 FLASH CODE)

An external lockout occurs if the integrated ignition control determines that a measurable combustion cannot be established within three (3) consecutive ignition attempts. If flame is not established within the seven (7) second trial for ignition, the gas valve is deenergized, 15 second inter-purge cycle is completed, and ignition is reattempted. The control will repeat this routine three times if a measurable combustion is not established. The control will then shut off the induced draft blower and go into a lockout state.

If flame is established but lost, the control will energize the circulator blower at the heat speed and then begin a new ignition sequence. If flame is established then lost on subsequent attempts, the control will recycle for four (4) consecutive ignition attempts (five attempts total) before locking out.

The diagnostic fault code is 1 flash for a lockout due to failed ignition attempts or flame dropouts. The integrated control will automatically reset after one hour, or it can be reset by removing the thermostat signal or disconnecting the electrical power supply for over five seconds. If the diagnostic LED indicates an external lockout, perform the following checks:

- *Check the supply and manifold pressures*
- *Check the gas orifices for debris*
- *Check gas valve for proper operation*
- *Check secondary limit*
  A dirty filter, excessive duct static, insufficient air flow, a faulty limit, or a failed circulator blower can cause this limit to open. Check filters, total external duct static, circulator blower motor, blower motor speed tap (see wiring diagram), and limit. An interruption in electrical power during a heating cycle may also cause the auxiliary limit to open. The automatic reset secondary limit is located on top of the circulator blower assembly.
- *Check rollout limit*
  If the burner flames are not properly drawn into the heat exchanger, the flame rollout protection device will open. Possible causes are restricted or blocked flue passages, blocked or cracked heat exchanger, a failed induced draft blower, or insufficient combustion air. The rollout protection device is a manual reset limit located on the burner bracket. The cause of the flame rollout must be determined and corrected before resetting the limit.
- *Check flame sensor*
  A drop in flame signal can be caused by nearly invisible coating on the sensor. Remove the sensor and carefully clean with steel wool.
- *Check wiring*
  Check wiring for opens/shorts and miswiring.

IMPORTANT: If you have to frequently reset your gas/electric package unit, it means that a problem exists that should be corrected. Contact a qualified servicer for further information.

Pressure Switch Stuck Open (2 FLASH CODE)

IA pressure switch stuck open can be caused by a faulty pressure switch, faulty wiring, a disconnected or damaged hose, a blocked or restricted flue, or a faulty induced draft blower. If the control senses an open pressure switch during the pre-purge cycle, the induced draft blower only will be energized.

If the pressure switch opens after ignition has begun the gas valve is deenergized, the circulator blower heat off cycle begins, and the induced draft blower remains on. The diagnostic fault code is two flashes.

Pressure Switch Stuck Closed (3 FLASH CODE)

A stuck closed pressure switch can be caused by a faulty pressure switch or faulty wiring. If the control encounters a pressure switch stuck closed, the induced draft blower remains off. The diagnostic LED code for this fault is three (3) flashes.

Open Thermal Protection Device (4 FLASH CODE)

If the primary limit switch opens, the gas valve is immediately deenergized, the induced draft and air circulating blowers are energized. The induced draft and air circulator blowers remain energized until the limit switch recloses. The diagnostic fault code for an open limit is four (4) flashes.

A primary limit will open due to excessive supply air temperatures. This can be caused by a dirty filter, excessive duct static, insufficient air flow, or a faulty limit. Check filters, total external duct static, blower motor, blower motor speed tap (see wiring diagram), and limit. This limit will automatically reset once the temperature falls below a preset level.

Flame Detected with Gas Valve Closed (5 FLASH CODE)

If flame is detected with the gas valve deenergized, the combustion and air circulator blowers are energized. The diagnostic fault code is five (5) flashes for this condition. The control can be reset by removing the power supply to the unit or it will automatically reset after one hour. Miswiring is the probable cause for this fault.

SERVICING

Abnormal Operation - Cooling Codes

Short Cycle Compressor Delay (6 FLASH CODE)

The automatic ignition control has a built-in feature that prevents damage to the compressor in short cycling situations. In the event of intermittent power losses or intermittent thermostat operation, the ignition control will delay output to the compressor contactor for three minutes from the time power is restored. (Compressor is off a total of three minutes). The diagnostic LED will flash six (6) times to indicate the compressor contactor output is being delayed.

NOTE: Some electronic thermostats also have a built-in compressor short cycle timer that may be longer than the three minute delay given above. If you are using an electronic thermostat and the compressor has not started after three minutes, wait an additional five minutes to allow the thermostat to complete its short cycle delay time.

S-314 CHECKING FLAME SENSOR

A flame sensing device is used in conjunction with the ignition control module to prove combustion. If a microamp signal is not present the control will de-energize the gas valve and "retry" for ignition or lockout.

DSI Direct Spark Ignition Systems

WARNING

HIGH VOLTAGE!
Disconnect ALL power before servicing or installing this unit. Multiple power sources may be present. Failure to do so may cause property damage, personal injury or death.

1. Disconnect the flame sensor wire from terminal FS of the ignition control module.

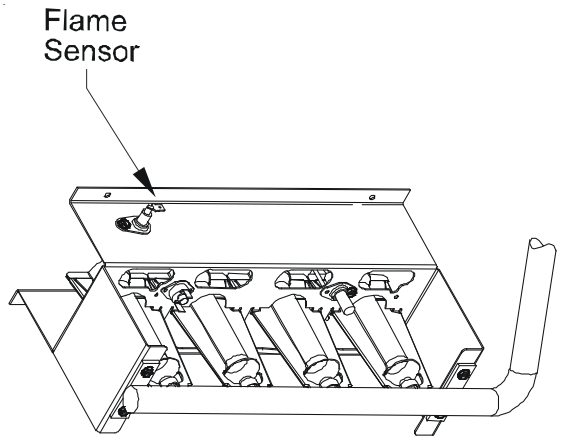

Flame Sensor

2. Connect a microamp meter in series with this wire and terminal FS.
3. Be sure the negative side of the meter is to the wire and the positive of the meter is to terminal FS.
4. Turn on Power.

WARNING

Line Voltage now present.

5. With Power ON, Place the unit into a heating cycle.
6. As soon as flame is established a microamp reading should be evident once proof of flame (microamp reading) is established, the hot surface ignitor will be de-energized.
7. The microamp reading should be 4 - 6 microamps.
8. If the microamp current is less than 0.5 microamp the control will lockout and flash a code of 1 flash after attempting to reestablish flame sense.
9. If the microamp reading is less than the minimum specified, check for high resistance wiring connections, the distance (3/16") between the sensor and burner, flame sensor connections, dirty flame sensor or poor grounding.
10. If no reading, check for continuity on all components and if good - replace ignition control module.

NOTE: Contaminated fuel or combustion air can create a nearly invisible coating on the flame sensor. This coating works as an insulator causing a loss in the flame sense signal. If this situation occurs the flame sensor must be cleaned with steel wool. Do not use sand paper, the silicone in sand paper will further contaminate the sensor.

DAIKIN COMMERCIAL PACKAGE UNIT ACCESSORIES		
Accessory Number	***Description***	***Model Size***
***HSKT036*	High Static Kits	3 Ton
***HSKT048*	High Static Kits	4 Ton
***HSKT060*	High Static Kits	5 Ton
***HSKT072*	High Static Kits	6 Ton (single speed only)
**EHK*	Heater Kits	3-6 Ton
14CURB3672B	Roof Curb 14" Tall	3-6 Ton
14CURB3672BNP	Roof Curb 14" Tall No Insulated Panels	3-6 Ton
36DROP3672B	Supply and Return Drop	3-6 Ton
CDK36	Concentric Duct Kit	3 Ton
CDK36515	Flush Mount Concentric Duct Kit w/ Filter	3 Ton
CDK36530	Step Down Concentric Duct Kit	3 Ton
CDK36535	Step Down Concentric Duct Kit w/ Filter	3 Ton
CDK4872	Concentric Duct Kit	4-6 Ton
CDK4872515	Flush Mount Concentric Duct Kit w/ Filter	4-6 Ton
CDK4872530	Step Down Concentric Duct Kit	4-6 Ton
CDK4872535	Step Down Concentric Duct Kit w/ Filter	4-6 Ton
D25FD3672	25% Manual Fresh Air Damper	3-6 Ton
D25MFD3672	25% Motorized Fresh Air Damper	3-6 Ton
DBRD3672	Daikin Barometric Relief Damper	3-6 Ton
DDNECNJ3672C	ECONOMIZER (MCCDANIEL METALS)	3-6 Ton
DDNECNJ3672NR[1]	Downflow Jade Economizer All Fuels (No Barometric Relief) (MCCDANIEL METALS)	3-6 Ton
1036609B[2]	Downflow Economizer (ROOFTOP SYSTEMS)	3-6 Ton
10366D09C[2]	Downflow Economizer (for models with DDC Control) (ROOFTOP SYSTEMS)	3-6 Ton
DDNSQRD3616	Downflow Square to Round Adapter (16" Round)	3 Ton
DDNSQRD487218	Downflow Square to Round Adapter (18" Round)	4-6 Ton
DHZECNJ3672	Horizontal Jade Economizer All Fuels	3-6 Ton
10396D09	Horizontal Economizer (for models with DDC Control)	3-6 Ton
DNBBS3672	Burglar Bar Sleeves Includes Supply and Return	3-6 Ton
DPE36722	Power Exhaust (208/230v)	3-6 Ton
DPE36724	Power Exhaust (460v)	3-6 Ton
DPE36727	Power Exhaust (575v)	3-6 Ton
3PMK01	3-Phase Monitor (for models with DDC Control)	3-6 Ton
3PMNDK01	3-Phase Monitor (Non-DDC Control models)	3-6 Ton
DFSKT01	Ditry Filter Kit (for models with DDC Control)	3-6 Ton
FSK01A	Freeze Stat Kit	All Models
GFCI	Convenience Outlet	3-6 Ton
GHRC-1	Hurricane/Seismic Clips	All Models
HA-02	High Altitude Kit	All Models
HAILGD03D	Hail Guard Kit	3-5 Ton
HAILGD04D	Hail Guard Kit	6 Ton
IP3672	Roof Curb Insulated Panels	3-6 Ton
IRKT-01	Isolation Relay Kit	3-6 Ton
LAKT01	Low Ambient Kit	3-6 Ton
DLAKT01	Low Ambient Kit (for models with DDC Control)	3-6 Ton
LPM-06	LP Conversion Kit	3-6 Ton
LPT-00A	LP Conversion Kit (DCG036045 only)	3 Ton
OT18-60A	Outdoor Thermostat	All Models
SPKT01	Single Point Kit - Single Phase	3-6 Ton B Chassis Only
SPKT02	Single Point Kit - Three Phase	3-6 Ton
220-GX-01	Flue Extension Kit	3-6 Ton

** Complete listing of EHK kits listed on electrical data page in this manual.

***NOTE: High static airflow requires installation of high static kit (HSKT*).

[1] If this economizer is used for factory or field installed and power exhaust is also required, please use appropriate power exhaust: DPE36722, DPE36724, DPE36727.

[2] If this economizer is used for factory or field installed and power exhaust is also required, please contact RRS Rooftop Systems directly for more information and ordering accessories.

DAIKIN COMMERCIAL PACKAGE UNIT DDC CONTROLS	
WATTMASTER / DAIKIN PART NUMBER	**DESCRIPTION**
OE377-26B-00001 / PCBCG100	DDC Controller
OE255 / 0130L00110	CO_2 Sensor
OE361-13 / 0130L00126	CommLink 5 Communications Interface
EBC-3-F / 0130L00114 EBC-10-F / 0130L00115 EBC-50-F / 0130L00116 EBC-150-F / 0130L00117	EBC E-BUS Cable Assembly E-BUS Power & Comm 3 Ft, 10 Ft, 50 Ft,150 Ft
MS000248	E-BUS Adapter Hub
HZ-EBC-248	E-BUS Adapter Hub with 1.5 Ft. EBC Cable
OE365-15-EBA	E-BUS Adapter Board
OE256-07 / 0130L00131	E-BUS CO_2 Sensor with Remote Pickup - Duct Mounted
OE256-05 / 0130L00128	E-BUS CO_2 Sensor - Space
OE217-02 / 0130L00118	E-BUS Digital Room Sensor - LCD Display - Temp. Only
OE217-03 / 0130L00119	E-BUS Digital Room Sensor - LCD Display - Temp & RH
OE217-04 / 0130L00127	E-BUS Digital Room Sensor - No LCD Display - Temp & RH
OE265-15 / 0130L00132	E-BUS Horizontal Outside Air Temperature & RH Sensor
OE265-16 / 0130L00133	E-BUS Vertical Outside Air Temperature & RH Sensor
OE415-02 / 0130L00122	IP Module Kit
OE364-23 / 0130L00125	MiniLink 5
OE265-13 / 0130L00106	Outdoor Air Humidity Sensor
OE250 / 0130L00108	Outdoor Air Temperature Sensor
OE368-23-LON3-G / 0130L00124	PT-Link II LON-3-G
OE265-11 / 0130L00129	Space Humidity Sensor
OE213 / 0130L00107	Standard Room Sensor - W/ Override & Slide Adjust
OE230 / 0130L00112 OE231 / 0130L00113	Supply Air Temperature Sensor
OE437-03 / 0130L00130	Surge Protector
OE392-10-G / 0130L00121	System Manager Touch Screen II-G

For complete information and installation instructions for models with DDC controls, see manual DK-DDC-TGD-01*.

ACCESSORIES

ROOF CURBS 14CURB3672

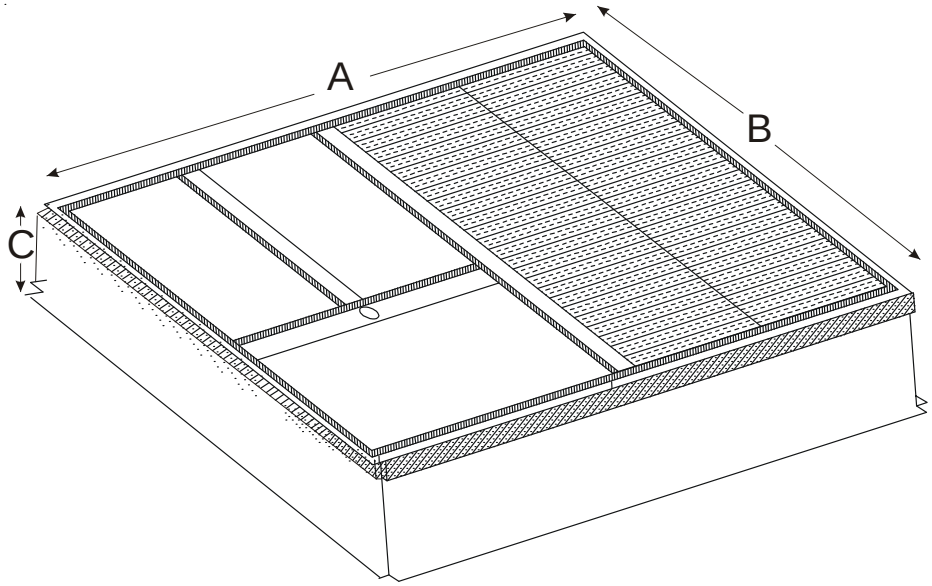

D14CURB3672				
Chassis	**Models**	**A**	**B**	**C**
#1	3 - 6 Tons	70 3/4"	37"	14"

Measurement in inches.

DOWNFLOW SQUARE TO ROUND ADAPTERS
DDNSQRD3616, DDNSQRD487218

DNSQRD36B Shown

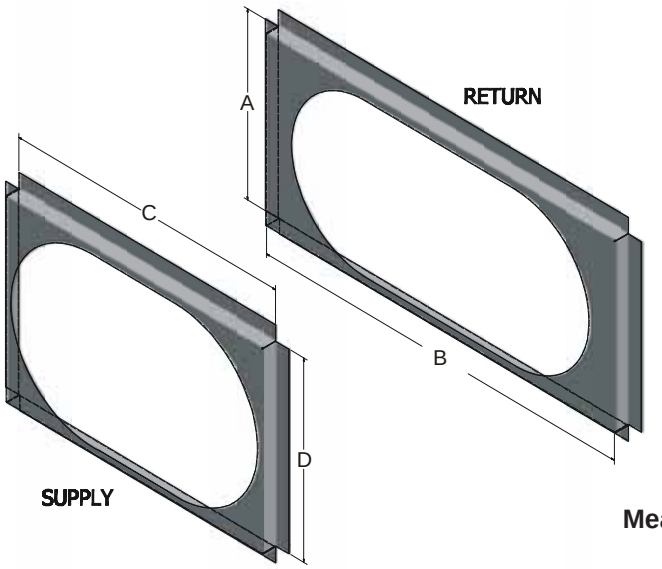

Measurement in inches.

DOWNFLOW SQUARE TO ROUND ADAPTER					
MODEL	**SIZE**	**A**	**B**	**C**	**D**
DDNSQRD3616	16" ROUND	13.50	31.125	19.50	13.50
DDNSQRD487218	18" ROUND	13.50	31.125	19.50	19.00

ACCESSORIES

MOTORIZED/MANUAL FRESH AIR DAMPERS

25% FRESH AIR DAMPER			
CHASSIS	MODELS	MANUAL	MOTORIZED
#1	3 - 6 Tons	D25FD3672	D25MFD3672

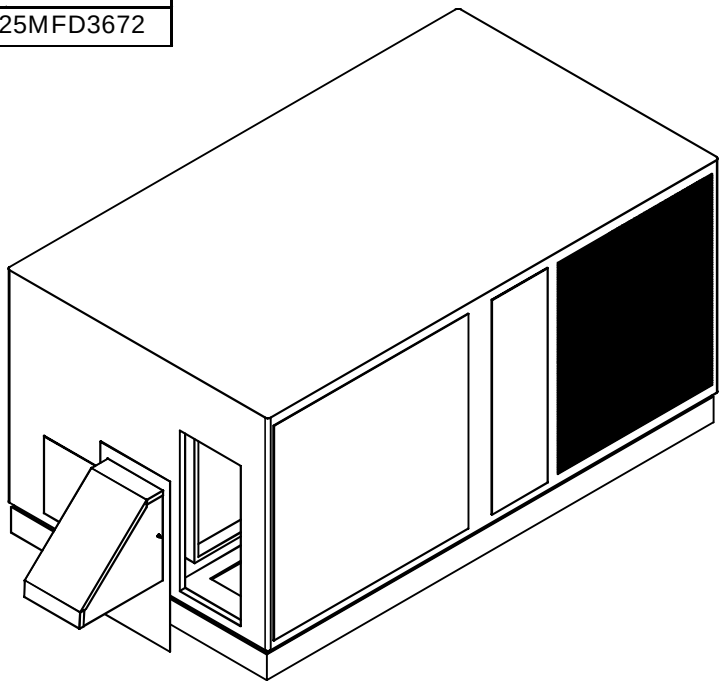

ECONOMIZERS

HORIZONTAL ECONOMIZER		
MODEL	TYPE	MODEL
DHZECNJ3672	HORIZONTAL	3-6 TON DCC/DCG/DCH

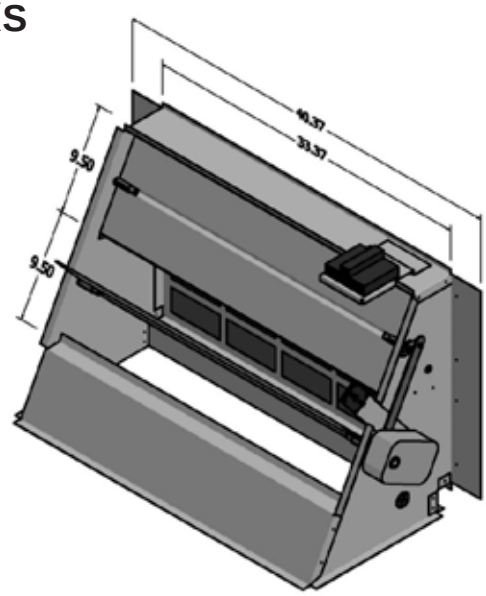

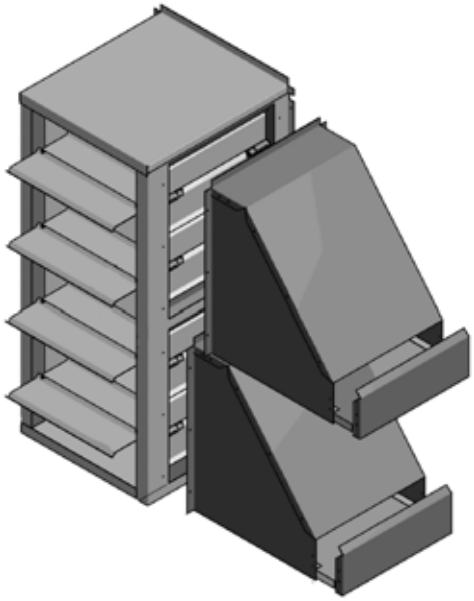

DOWNFLOW ECONOMIZER		
MODEL	TYPE	MODEL
DDNECNJ3672C	DOWNFLOW (MCDANIEL METALS)	3-6 TON DCC/DCG/DCH
DDNECNJ3672NR	DOWNFLOW W/O BAROMETRIC RELIEF (MCDANIEL METALS)	3-6 TON DCC/DCG/DCH
1036609B	DOWNFLOW (ROOFTOP SYSTEMS)	3-6 TON DCC/DCG/DCH

ACCESSORIES

HAIL GUARD KIT

HAIL GUARD KIT	
MODELS	**KIT #**
3 - 5 Tons	HAILGD03D
6 Tons	HAILGD04D

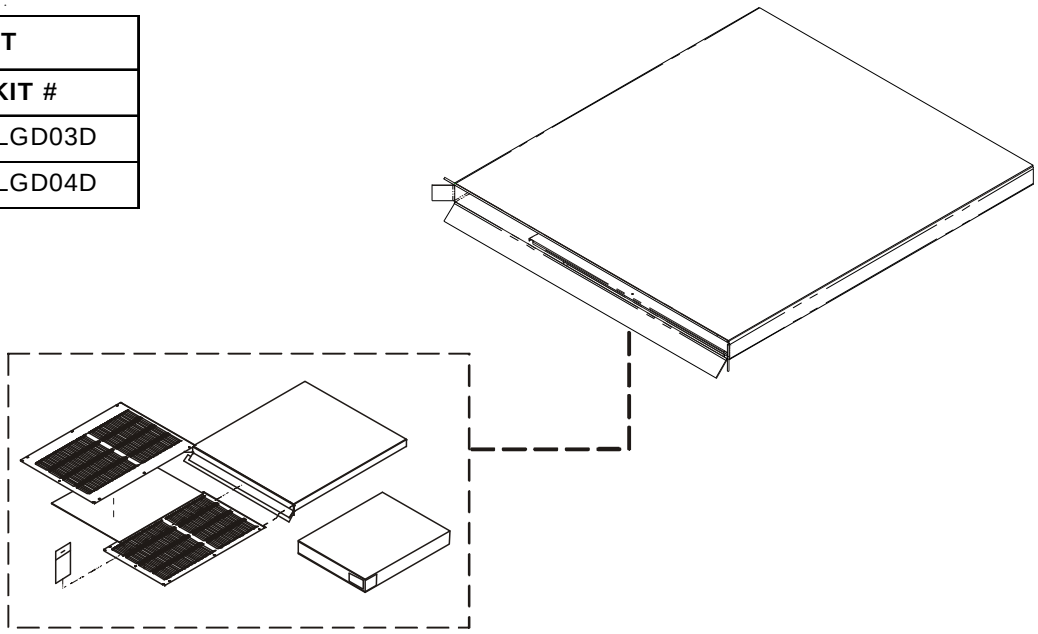

FLUE EXTENSION KIT

FLUE EXTENSION KIT						
MODELS	**KIT #**	**A**	**B**	**C**	**D**	**E**
3 - 6 Tons	220-GX-01	3.25	2.25	6.50	2.38	24.00

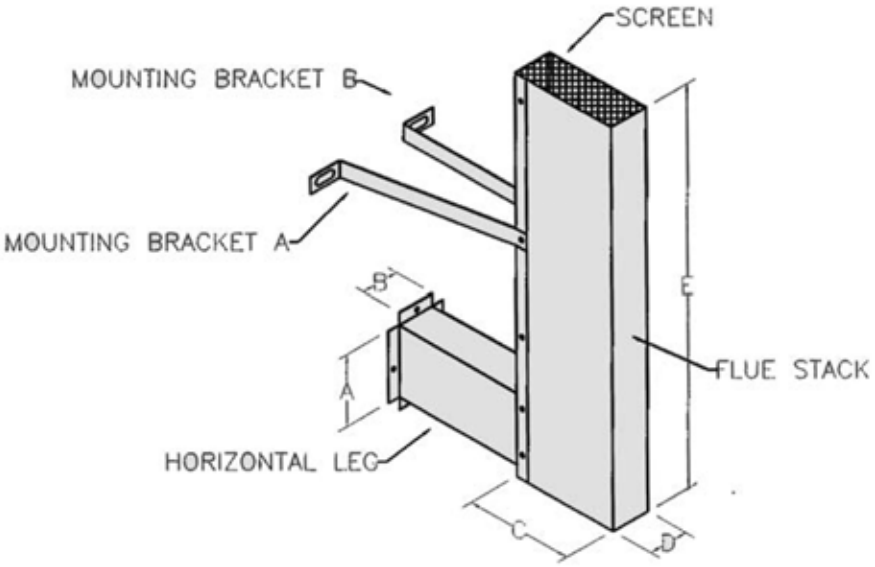

WARNING

HIGH VOLTAGE!
DISCONNECT ALL POWER BEFORE SERVICING OR INSTALLING THIS UNIT. MULTIPLE POWER SOURCES MAY BE PRESENT. FAILURE TO DO SO MAY CAUSE PROPERTY DAMAGE, PERSONAL INJURY OR DEATH.

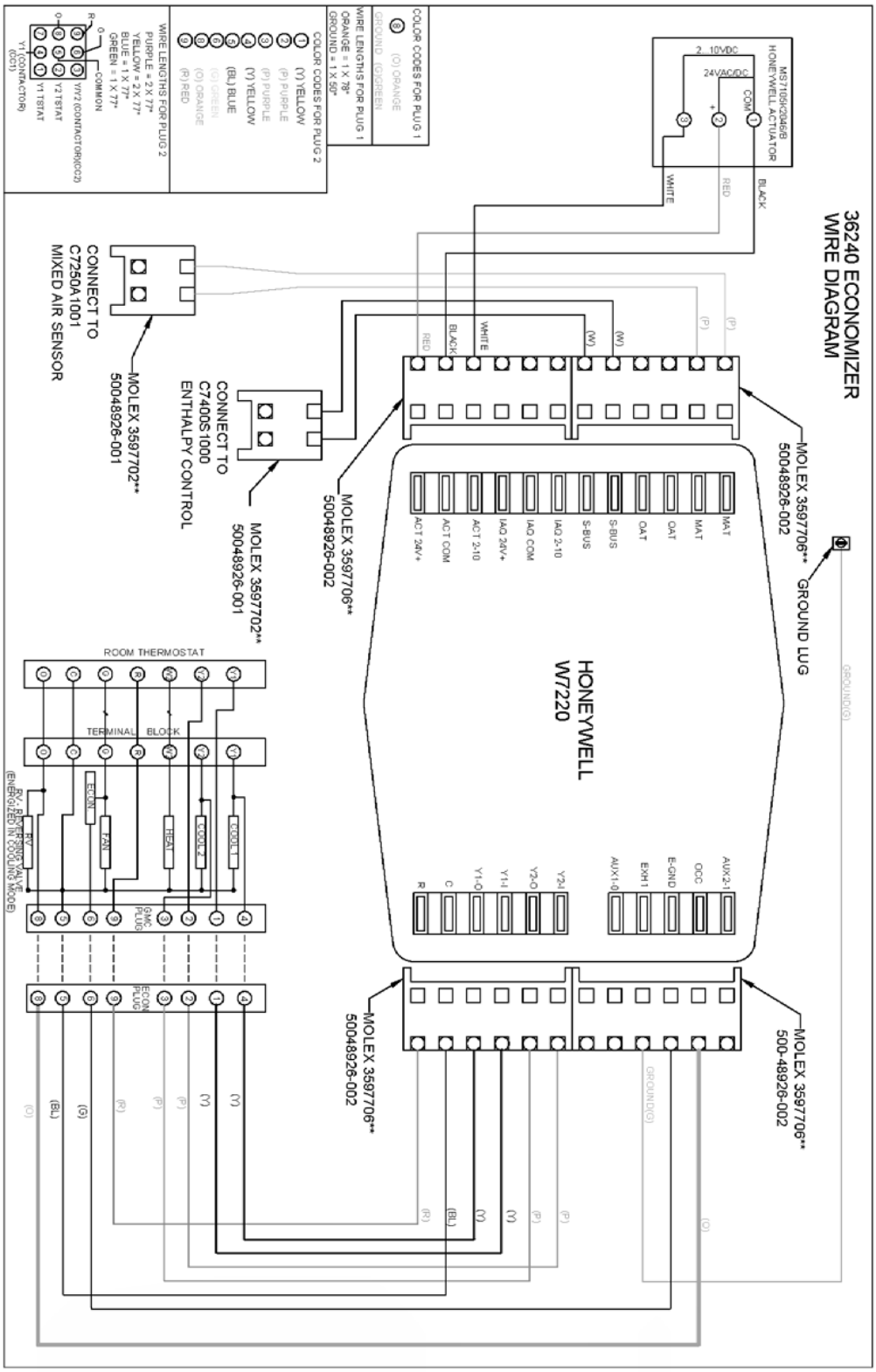

Wiring is subject to change. Always refer to the wiring diagram on the unit for the most up-to-date wiring.

ACCESSORIES WIRING DIAGRAMS

POWERED CONV. OUTLET

WARNING

HIGH VOLTAGE!
DISCONNECT ALL POWER BEFORE SERVICING OR INSTALLING THIS UNIT. MULTIPLE POWER SOURCES MAY BE PRESENT. FAILURE TO DO SO MAY CAUSE PROPERTY DAMAGE, PERSONAL INJURY OR DEATH.

FOR UNITS WITH SERIALS BEFORE 1607

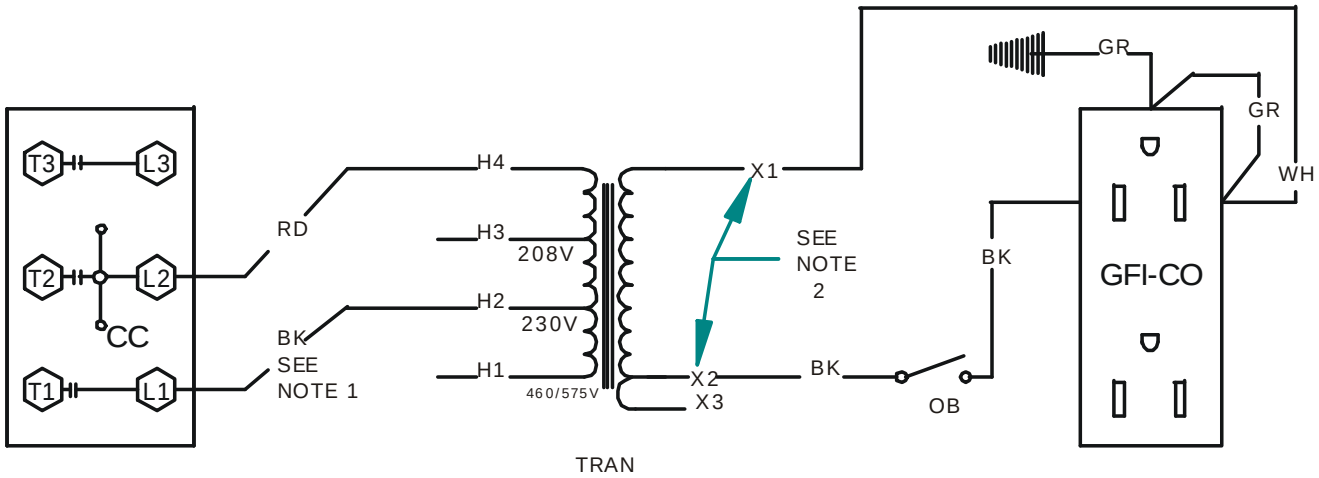

NOTES:

1. FOR 208V OPERATION MOVE BLACK WIRE FROM H2 TO H3 ON TRANSFORMER. 406V AND 575V UNITS WILL LEAVE FACTORY WITH BK WIRE CONNECTED TO H1.

2. FOR 575V MODELS, BK WILL GO TO X1 ON TRANSFORMER AND WH WILL GO TO X3.

LEGEND:

CC - COMPRESSOR CONTACT
TRAN - OUTLET TRANSFORMER
OB - OUTLET BREAKER
GFI-CO - GROUND FAULT INTERUPTED - CONVENIENCE OUTLET

0140L00698 REV A

Wiring is subject to change. Always refer to the wiring diagram on the unit for the most up-to-date wiring.

ACCESSORIES WIRING DIAGRAMS

POWERED CONV. OUTLET

WARNING

HIGH VOLTAGE!
DISCONNECT ALL POWER BEFORE SERVICING OR INSTALLING THIS UNIT. MULTIPLE POWER SOURCES MAY BE PRESENT. FAILURE TO DO SO MAY CAUSE PROPERTY DAMAGE, PERSONAL INJURY OR DEATH.

FOR UNITS WITH SERIALS 1607 AND NEWER

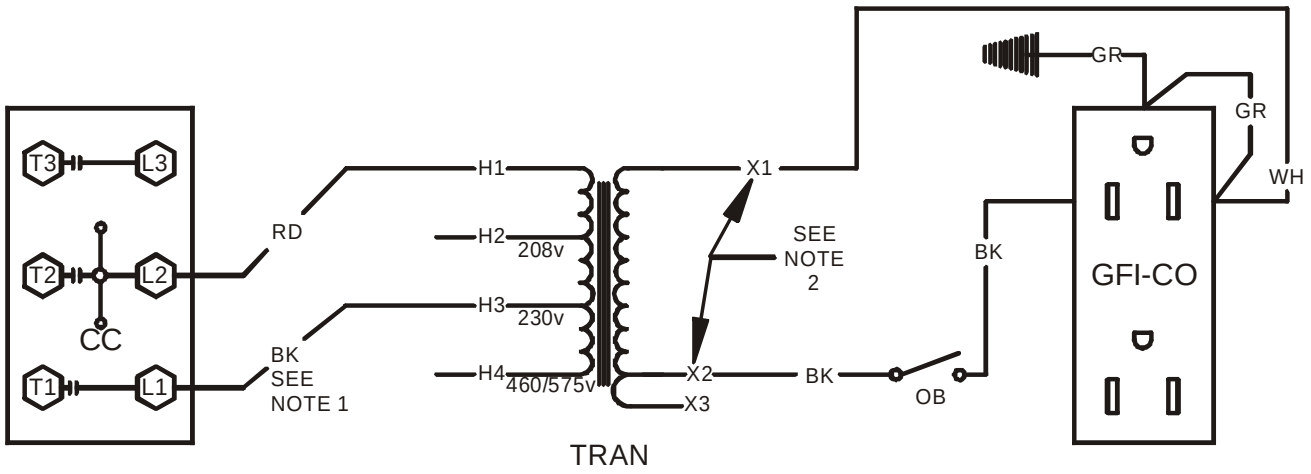

NOTES:

1. FOR 208v OPERATION MOVE BLACK WIRE FROM H3 TO H2 ON TRANSFORMER. 460v AND 575v UNITS WILL LEAVE FACTORY WITH BK WIRE CONNECTED TO H4.

2. FOR 575v MODELS, BK WILL GO TO X1 ON TRANSFORMER AND WH WILL GO TO X3.

LEGEND:

CC - COMPRESSOR CONTACTOR
TRAN - OUTLET TRANSFORMER
OB - OUTLET BREAKER
GFI-CO - GROUND FAULT INTERUPTED - CONVENIENCE OUTLET

0140L05871-A

Wiring is subject to change. Always refer to the wiring diagram on the unit for the most up-to-date wiring.

ACCESSORIES WIRING DIAGRAMS DPE3672*

WARNING

HIGH VOLTAGE!
DISCONNECT ALL POWER BEFORE SERVICING OR INSTALLING THIS UNIT. MULTIPLE POWER SOURCES MAY BE PRESENT. FAILURE TO DO SO MAY CAUSE PROPERTY DAMAGE, PERSONAL INJURY OR DEATH.

POWER EXHAUST 3 - 6 TON

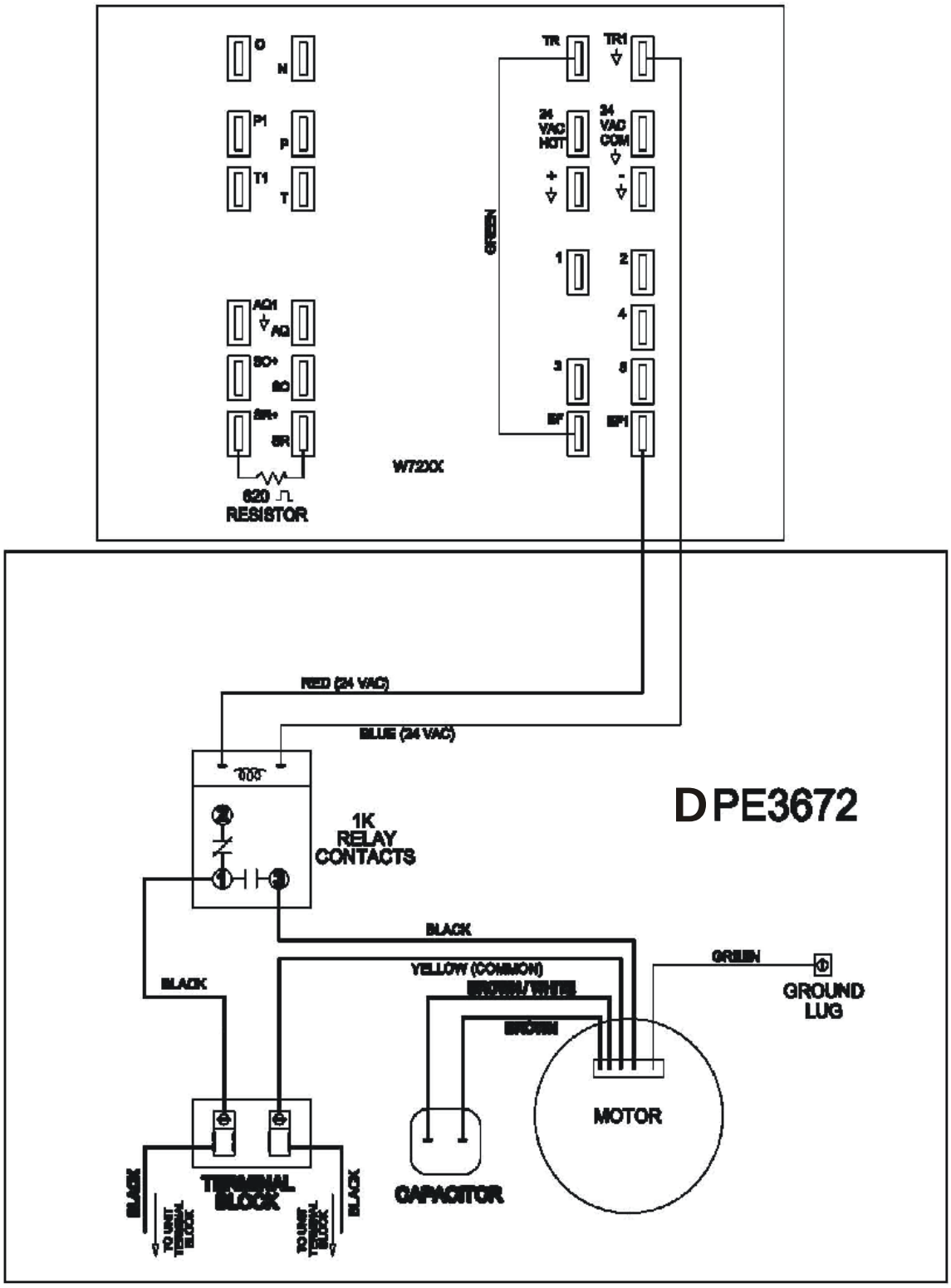

Wiring is subject to change. Always refer to the wiring diagram on the unit for the most up-to-date wiring.

ACCESSORIES WIRING DIAGRAMS

WARNING

HIGH VOLTAGE!
DISCONNECT ALL POWER BEFORE SERVICING OR INSTALLING THIS UNIT. MULTIPLE POWER SOURCES MAY BE PRESENT. FAILURE TO DO SO MAY CAUSE PROPERTY DAMAGE, PERSONAL INJURY OR DEATH.

PACKAGE SYSTEM WIRING DIAGRAM - 1 STAGE ELECTRIC HEAT

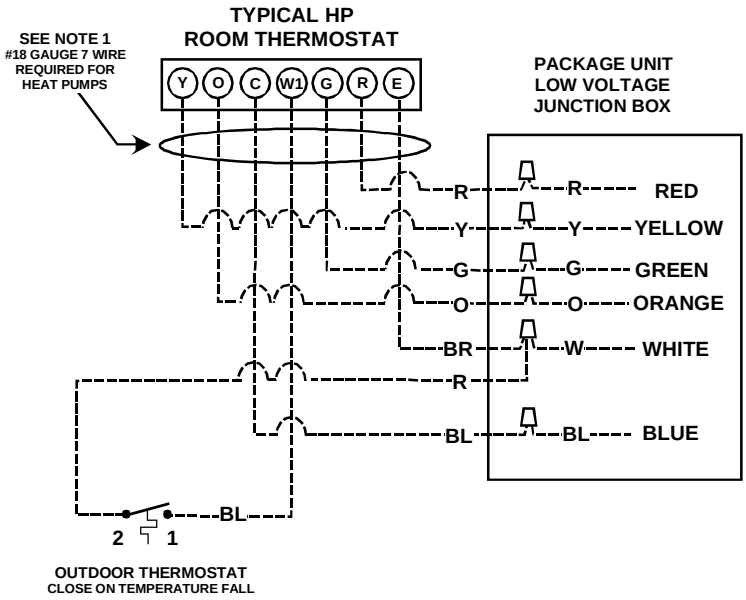

PACKAGE SYSTEM WIRING DIAGRAM - 2 STAGE ELECTRIC HEAT ABOVE 10 KW

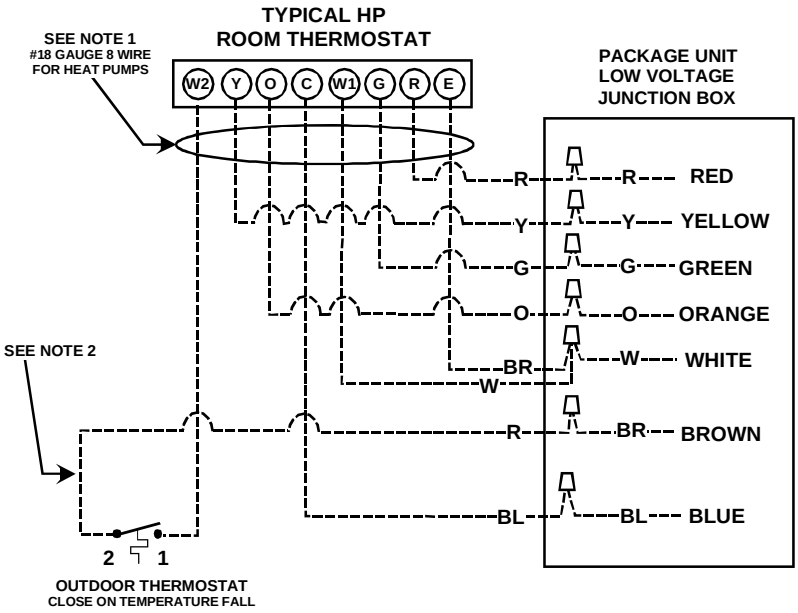

NOTES:

1) **"O" and "E" used on heat pumps only.**
2) **Connect wire from terminal #1 on outdoor thermostat to the white wire on package units if single stage indoor thermostat is used.**

Color Codes
R - Red
Y - Yellow
BL - Blue
BR - Brown
O - Orange
W - White
G - Green

OT18-60A OUTDOOR THERMOSTAT

Wiring is subject to change. Always refer to the wiring diagram on the unit for the most up-to-date wiring.

ACCESSORIES WIRING DIAGRAMS

WARNING

HIGH VOLTAGE!
DISCONNECT ALL POWER BEFORE SERVICING OR INSTALLING THIS UNIT. MULTIPLE POWER SOURCES MAY BE PRESENT. FAILURE TO DO SO MAY CAUSE PROPERTY DAMAGE, PERSONAL INJURY OR DEATH.

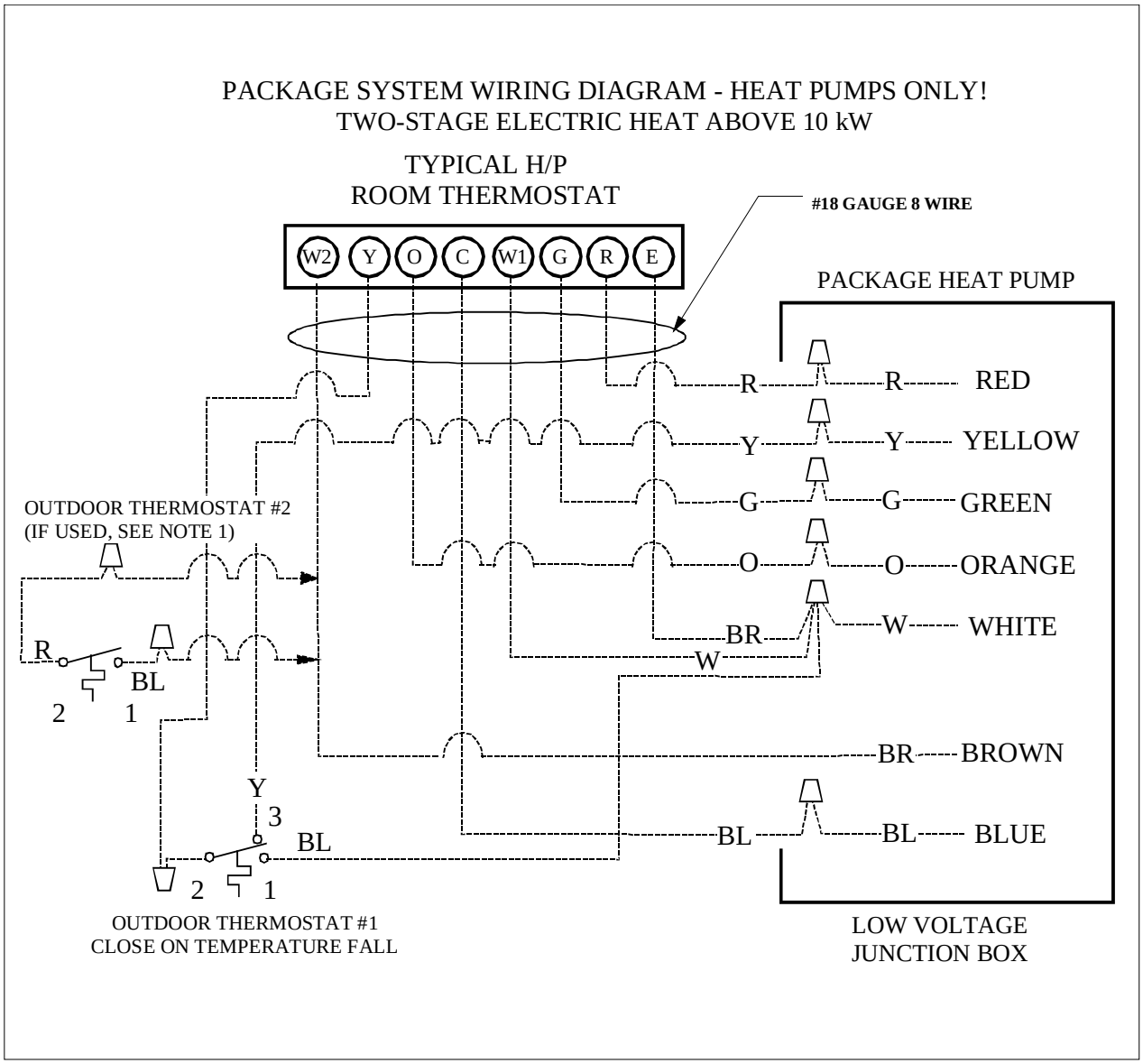

For outdoor temperatures below 0° F with 50% or higher relative humidity, set outdoor thermostat at 0° F

NOTE 1: OT18 #2 CAN BE CONNECTED BETWEEN W2 OF THERMOSTAT AND BROWN WIRE IF DESIRED.

COLOR CODES
R --RED
Y --YELLOW
BL-BLUE
BR-BROWN
O --ORANGE
W -WHITE
G --GREEN

OT18-60A OUTDOOR THERMOSTAT

Wiring is subject to change. Always refer to the wiring diagram on the unit for the most up-to-date wiring.

ACCESSORIES WIRING DIAGRAMS

WARNING

HIGH VOLTAGE!
DISCONNECT ALL POWER BEFORE SERVICING OR INSTALLING THIS UNIT. MULTIPLE POWER SOURCES MAY BE PRESENT. FAILURE TO DO SO MAY CAUSE PROPERTY DAMAGE, PERSONAL INJURY OR DEATH.

FOR UNITS WITH SERAILS BEFORE 1409

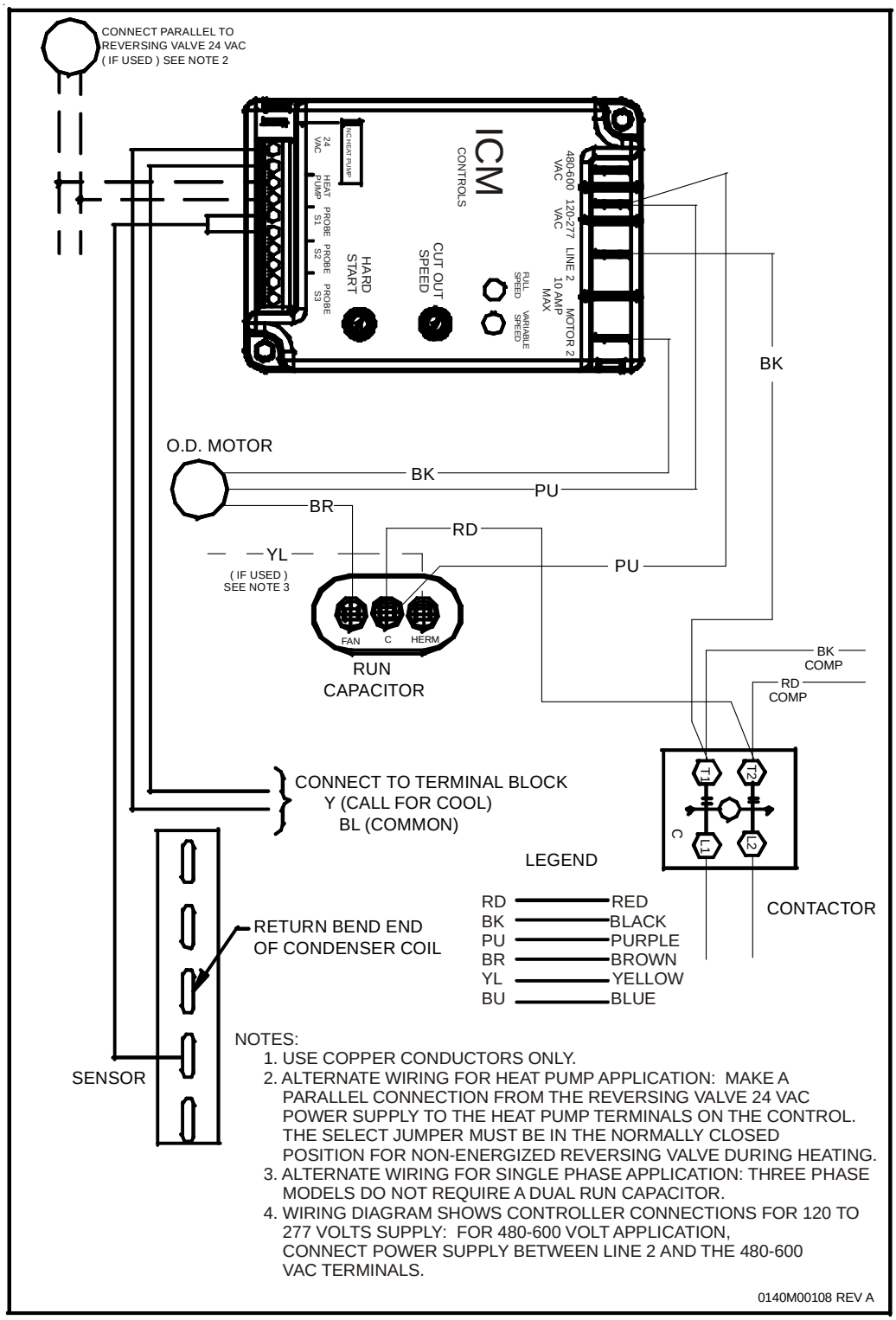

NOTICE: The cut out speed & hard start settings are factory preset. Changing those settings may cause early motor failure.

LOW AMBIENT FOR DCC/DCG 3 - 6 TON

Wiring is subject to change. Always refer to the wiring diagram on the unit for the most up-to-date wiring.

ACCESSORIES WIRING DIAGRAMS

WARNING

HIGH VOLTAGE!
DISCONNECT ALL POWER BEFORE SERVICING OR INSTALLING THIS UNIT. MULTIPLE POWER SOURCES MAY BE PRESENT. FAILURE TO DO SO MAY CAUSE PROPERTY DAMAGE, PERSONAL INJURY OR DEATH.

FOR UNITS WITH SERIALS 1409 AND NEWER

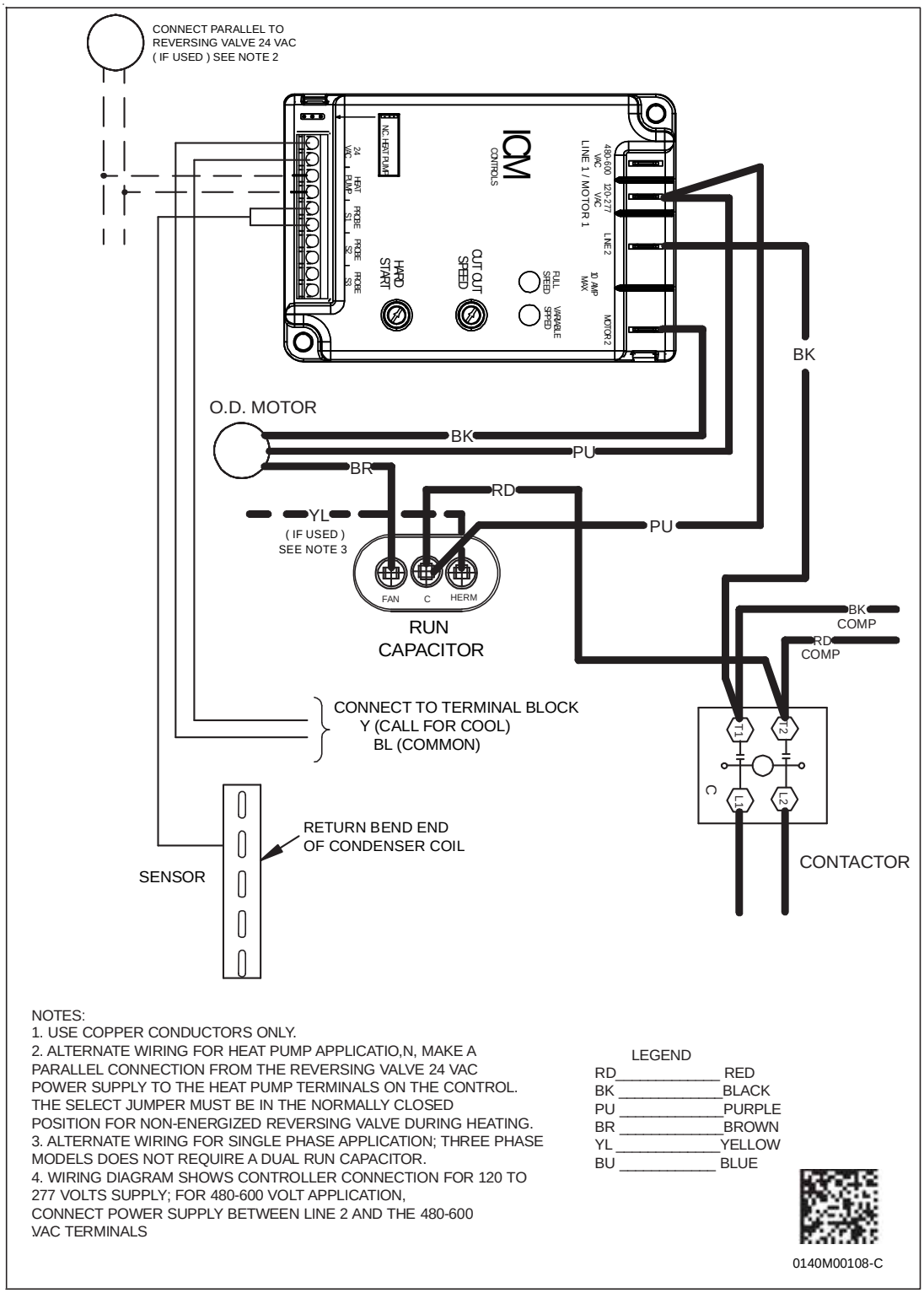

NOTICE: The cut out speed & hard start settings are factory preset. Changing those settings may cause early motor failure.

LOW AMBIENT FOR DCC/DCG 3 - 6 TON

Wiring is subject to change. Always refer to the wiring diagram on the unit for the most up-to-date wiring.

ACCESSORIES WIRING DIAGRAMS

WARNING

HIGH VOLTAGE!
DISCONNECT ALL POWER BEFORE SERVICING OR INSTALLING THIS UNIT. MULTIPLE POWER SOURCES MAY BE PRESENT. FAILURE TO DO SO MAY CAUSE PROPERTY DAMAGE, PERSONAL INJURY OR DEATH.

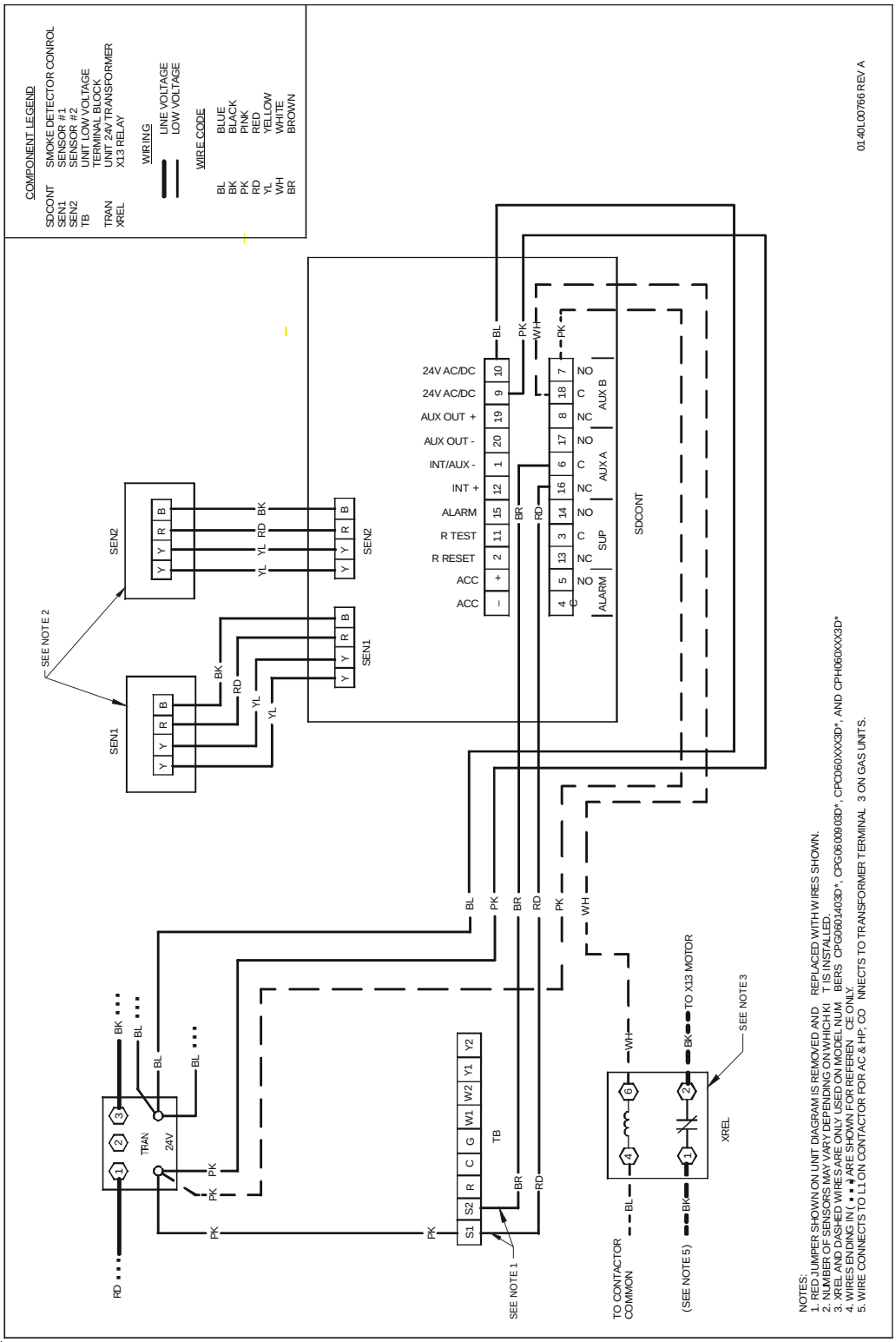

SMOKE DETECTOR

Wiring is subject to change. Always refer to the wiring diagram on the unit for the most up-to-date wiring.

ACCESSORIES WIRING DIAGRAMS

WARNING

HIGH VOLTAGE!
DISCONNECT ALL POWER BEFORE SERVICING OR INSTALLING THIS UNIT. MULTIPLE POWER SOURCES MAY BE PRESENT. FAILURE TO DO SO MAY CAUSE PROPERTY DAMAGE, PERSONAL INJURY OR DEATH.

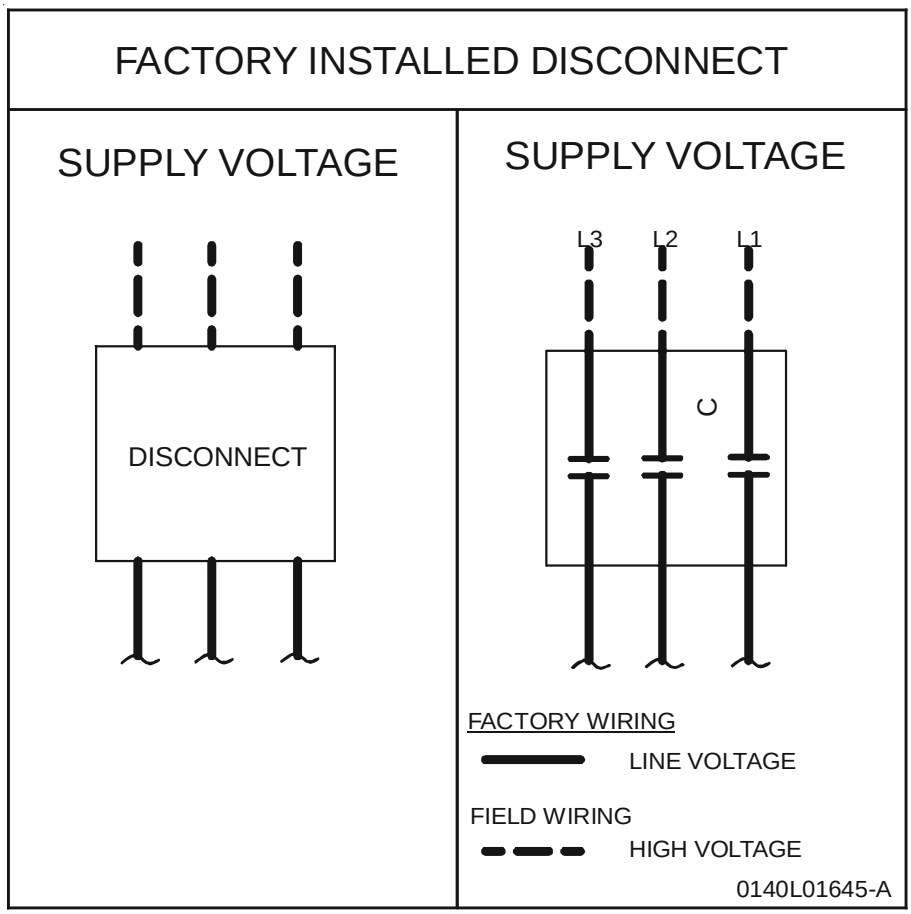

DISCONNECT MODULE

Wiring is subject to change. Always refer to the wiring diagram on the unit for the most up-to-date wiring.

ACCESSORIES WIRING DIAGRAMS

WARNING

HIGH VOLTAGE!
DISCONNECT ALL POWER BEFORE SERVICING OR INSTALLING THIS UNIT. MULTIPLE POWER SOURCES MAY BE PRESENT. FAILURE TO DO SO MAY CAUSE PROPERTY DAMAGE, PERSONAL INJURY OR DEATH.

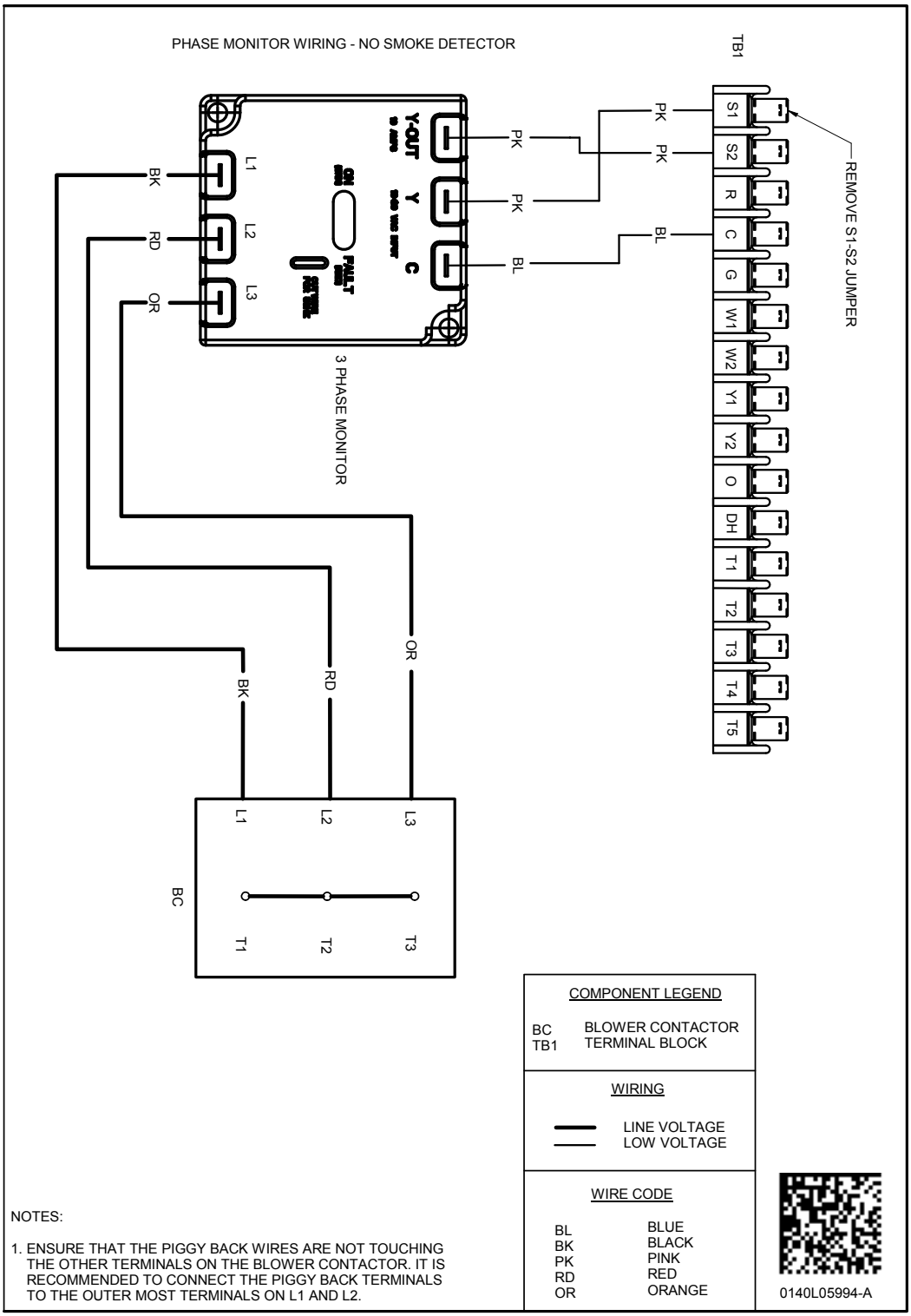

3 PHASE MONITOR

Wiring is subject to change. Always refer to the wiring diagram on the unit for the most up-to-date wiring.

ACCESSORIES WIRING DIAGRAMS

WARNING

HIGH VOLTAGE!
DISCONNECT ALL POWER BEFORE SERVICING OR INSTALLING THIS UNIT. MULTIPLE POWER SOURCES MAY BE PRESENT. FAILURE TO DO SO MAY CAUSE PROPERTY DAMAGE, PERSONAL INJURY OR DEATH.

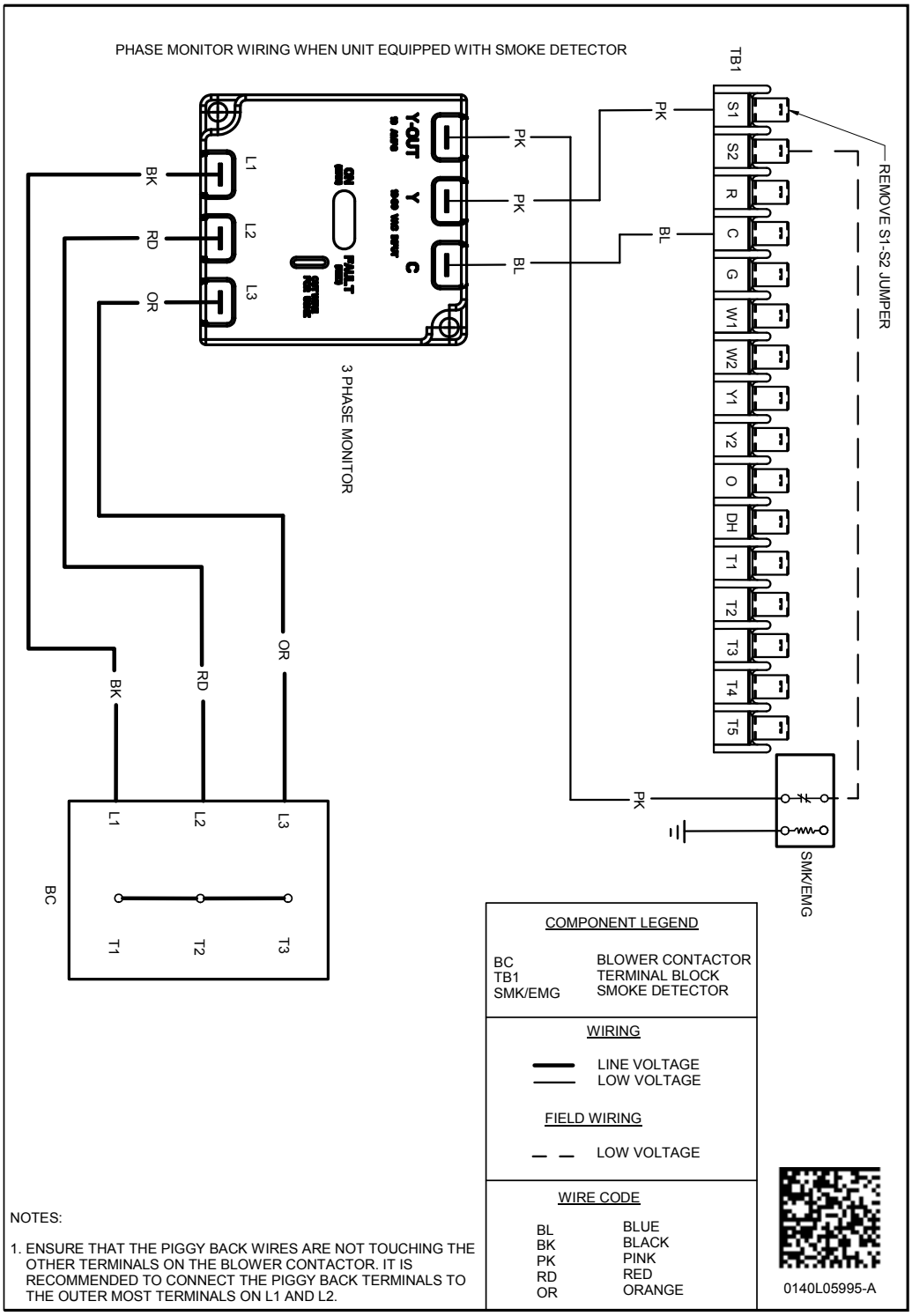

3 PHASE MONITOR

Wiring is subject to change. Always refer to the wiring diagram on the unit for the most up-to-date wiring.

WARNING

HIGH VOLTAGE!
DISCONNECT ALL POWER BEFORE SERVICING OR INSTALLING THIS UNIT. MULTIPLE POWER SOURCES MAY BE PRESENT. FAILURE TO DO SO MAY CAUSE PROPERTY DAMAGE, PERSONAL INJURY OR DEATH.

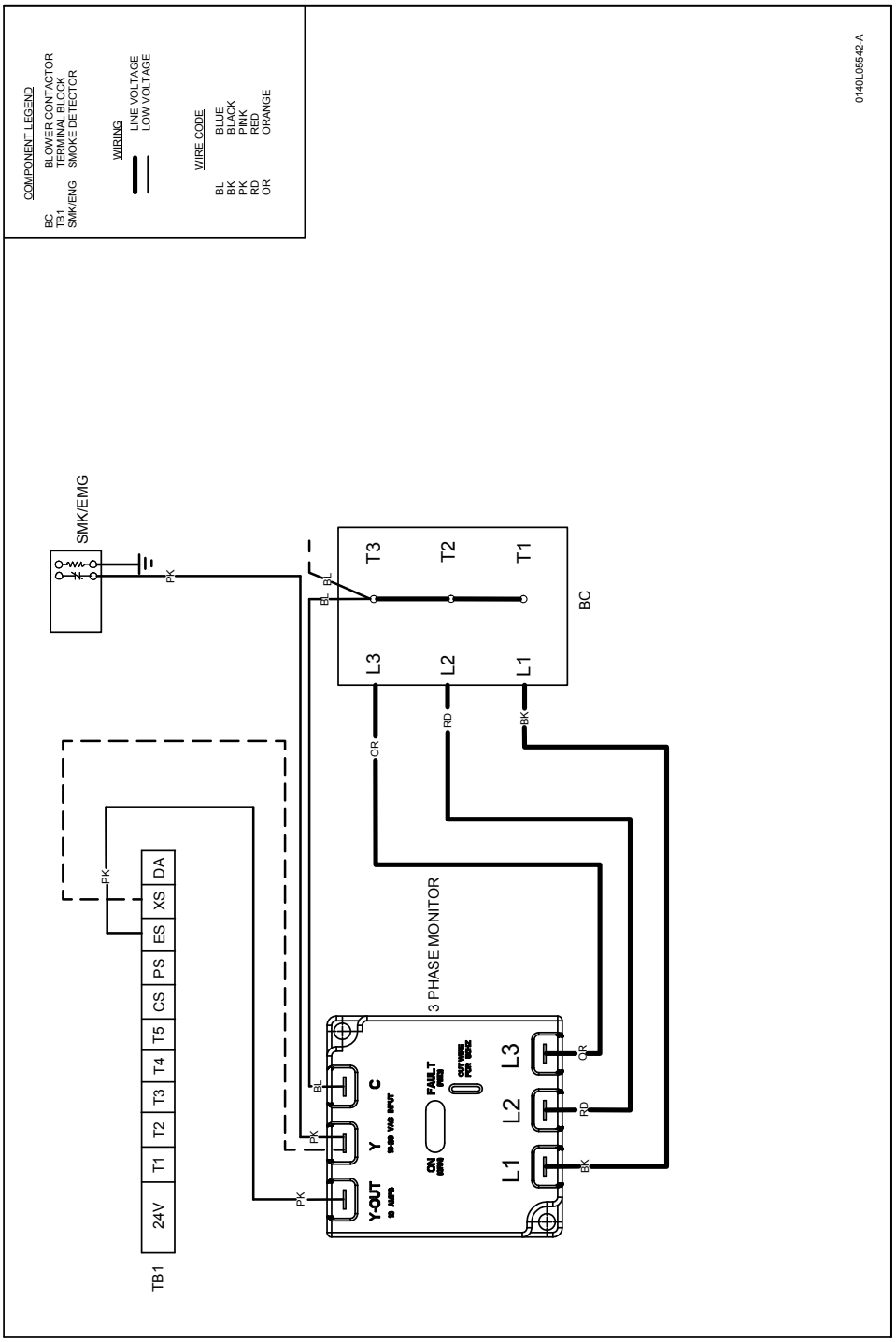

3 PHASE MONITOR

Wiring is subject to change. Always refer to the wiring diagram on the unit for the most up-to-date wiring.

ACCESSORIES WIRING DIAGRAMS

DDC CONTROL

WARNING

HIGH VOLTAGE!
DISCONNECT ALL POWER BEFORE SERVICING OR INSTALLING THIS UNIT. MULTIPLE POWER SOURCES MAY BE PRESENT. FAILURE TO DO SO MAY CAUSE PROPERTY DAMAGE, PERSONAL INJURY OR DEATH.

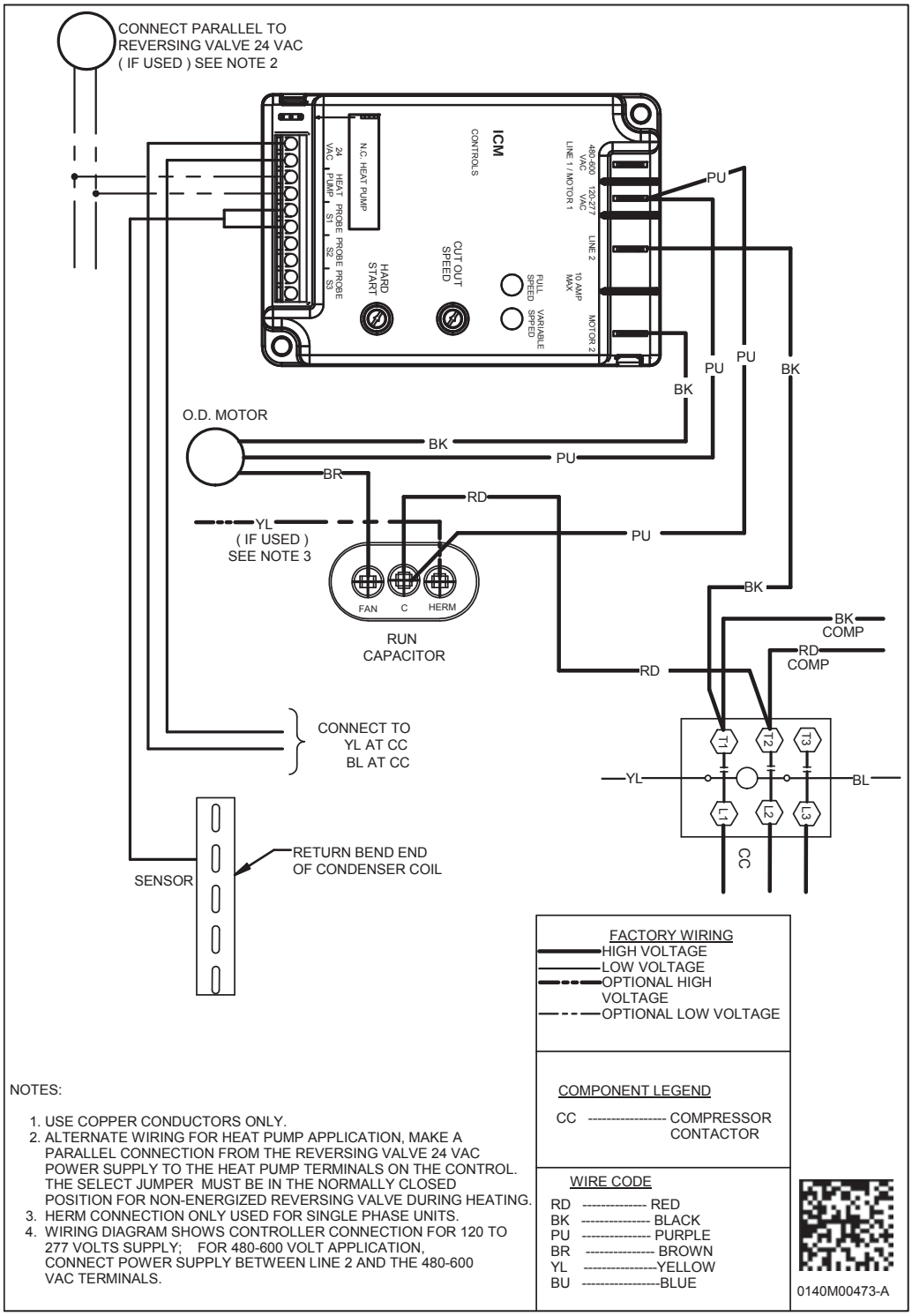

NOTES:

1. USE COPPER CONDUCTORS ONLY.
2. ALTERNATE WIRING FOR HEAT PUMP APPLICATION, MAKE A PARALLEL CONNECTION FROM THE REVERSING VALVE 24 VAC POWER SUPPLY TO THE HEAT PUMP TERMINALS ON THE CONTROL. THE SELECT JUMPER MUST BE IN THE NORMALLY CLOSED POSITION FOR NON-ENERGIZED REVERSING VALVE DURING HEATING.
3. HERM CONNECTION ONLY USED FOR SINGLE PHASE UNITS.
4. WIRING DIAGRAM SHOWS CONTROLLER CONNECTION FOR 120 TO 277 VOLTS SUPPLY; FOR 480-600 VOLT APPLICATION, CONNECT POWER SUPPLY BETWEEN LINE 2 AND THE 480-600 VAC TERMINALS.

LOW AMBIENT

Wiring is subject to change. Always refer to the wiring diagram on the unit for the most up-to-date wiring.

WARNING

HIGH VOLTAGE!
DISCONNECT ALL POWER BEFORE SERVICING OR INSTALLING THIS UNIT. MULTIPLE POWER SOURCES MAY BE PRESENT. FAILURE TO DO SO MAY CAUSE PROPERTY DAMAGE, PERSONAL INJURY OR DEATH.

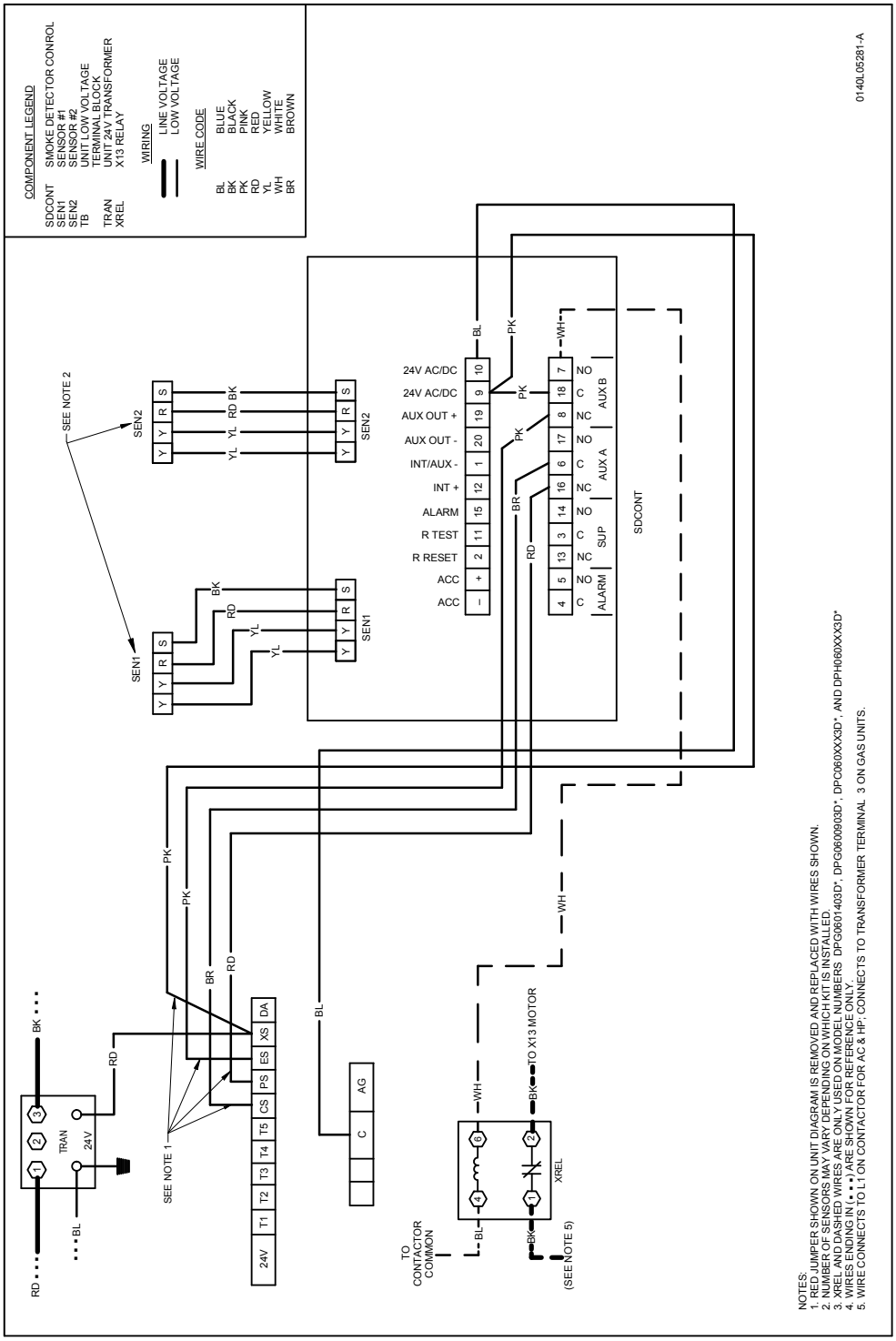

SMOKE DETECTOR

Wiring is subject to change. Always refer to the wiring diagram on the unit for the most up-to-date wiring.

HEATER KITS	
Part Number	**Description**
EHK1-10	10 KW Electric Heat Kit, 240V Single Phase
EHK3-10	10 KW Electric Heat Kit, 240V Three Phase
EHK4-10	10 KW Electric Heat Kit, 480V Three Phase
EHK7-10	10 KW Electric Heat Kit, 575V Three Phase
EHK1-15	15 KW Electric Heat Kit, 240V Single Phase
EHK3-15	15 KW Electric Heat Kit, 240V Three Phase
EHK4-15	15 KW Electric Heat Kit, 480V Three Phase
EHK7-15	15 KW Electric Heat Kit, 575V Three Phase
EHK1 -18	18 KW Electric Heat Kit, 240V Single Phase (FOR 4 TON ONLY)
EHK3 -18	18 KW Electric Heat Kit, 240V Three Phase (FOR 4 TON ONLY)
EHK4 -18	18 KW Electric Heat Kit, 480V Three Phase (FOR 4 TON ONLY)
EHK7 -18	18 KW Electric Heat Kit, 575V Three Phase (FOR 4 TON ONLY)
EHK1-20	20 KW Electric Heat Kit, 240V Single Phase
EHK3-20	20 KW Electric Heat Kit, 240V Three Phase
EHK4-20	20 KW Electric Heat Kit, 480V Three Phase
EHK7-20	20 KW Electric Heat Kit, 575V Three Phase
EHK3-25	25 KW Electric Heat Kit, 240V Three Phase
EHK4-25	25 KW Electric Heat Kit, 480V Three Phase
EHK7-25	25 KW Electric Heat Kit, 575V Three Phase

MINIMUM AIRFLOW FOR ELECTRIC HEAT

Unit	HEATER KIT MODEL NUMBER	MINIMUM CFM
3 ton	EHK*-10	1250
	EHK*-15	1250
4 ton	EHK*-10	1300
	EHK*-15	1400
	EHK*-18	1400
5 ton	EHK*-10	1700
	EHK*-15	1700
	EHK*-20	1800
6 ton	EHK*-10	2100
	EHK*-15	2100
	EHK*-20	2100
	EHK*-25	2100

ATTENTION INSTALLING PERSONNEL

Use only the heater kit specified for each model as dictated by the table above.

HEATER KIT WIRING DIAGRAMS

EHK1-10

WARNING

HIGH VOLTAGE!
DISCONNECT ALL POWER BEFORE SERVICING OR INSTALLING THIS UNIT. MULTIPLE POWER SOURCES MAY BE PRESENT. FAILURE TO DO SO MAY CAUSE PROPERTY DAMAGE, PERSONAL INJURY OR DEATH.

FOR UNITS WITH SERIALS BEFORE 1409

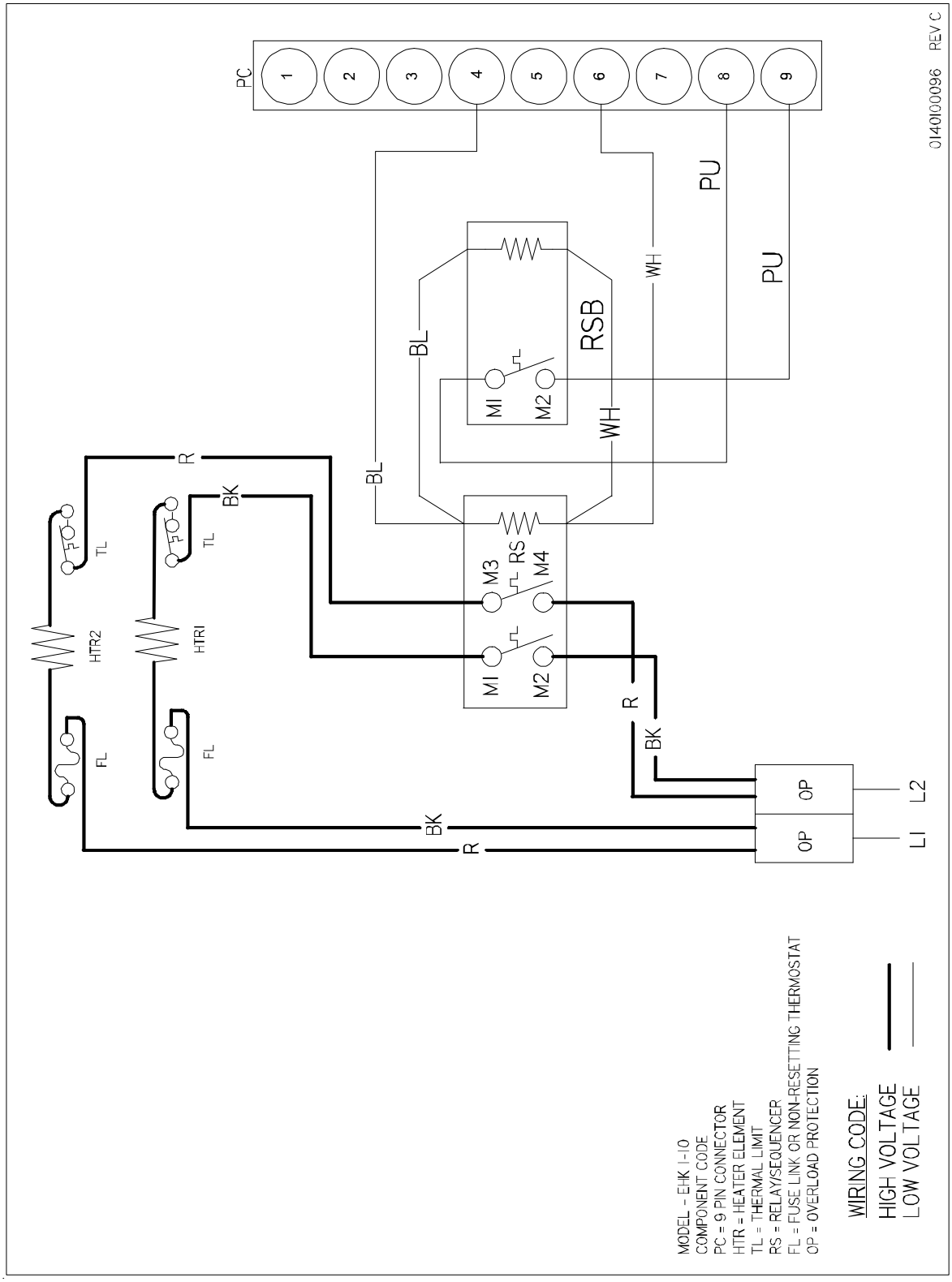

EHK1 - 10 HEAT KIT - 10 KW

Wiring is subject to change. Always refer to the wiring diagram on the unit for the most up-to-date wiring.

HEATER KIT WIRING DIAGRAMS

EHK1-15

WARNING

HIGH VOLTAGE!
DISCONNECT ALL POWER BEFORE SERVICING OR INSTALLING THIS UNIT. MULTIPLE POWER SOURCES MAY BE PRESENT. FAILURE TO DO SO MAY CAUSE PROPERTY DAMAGE, PERSONAL INJURY OR DEATH.

FOR UNITS WITH SERIALS BEFORE 1409

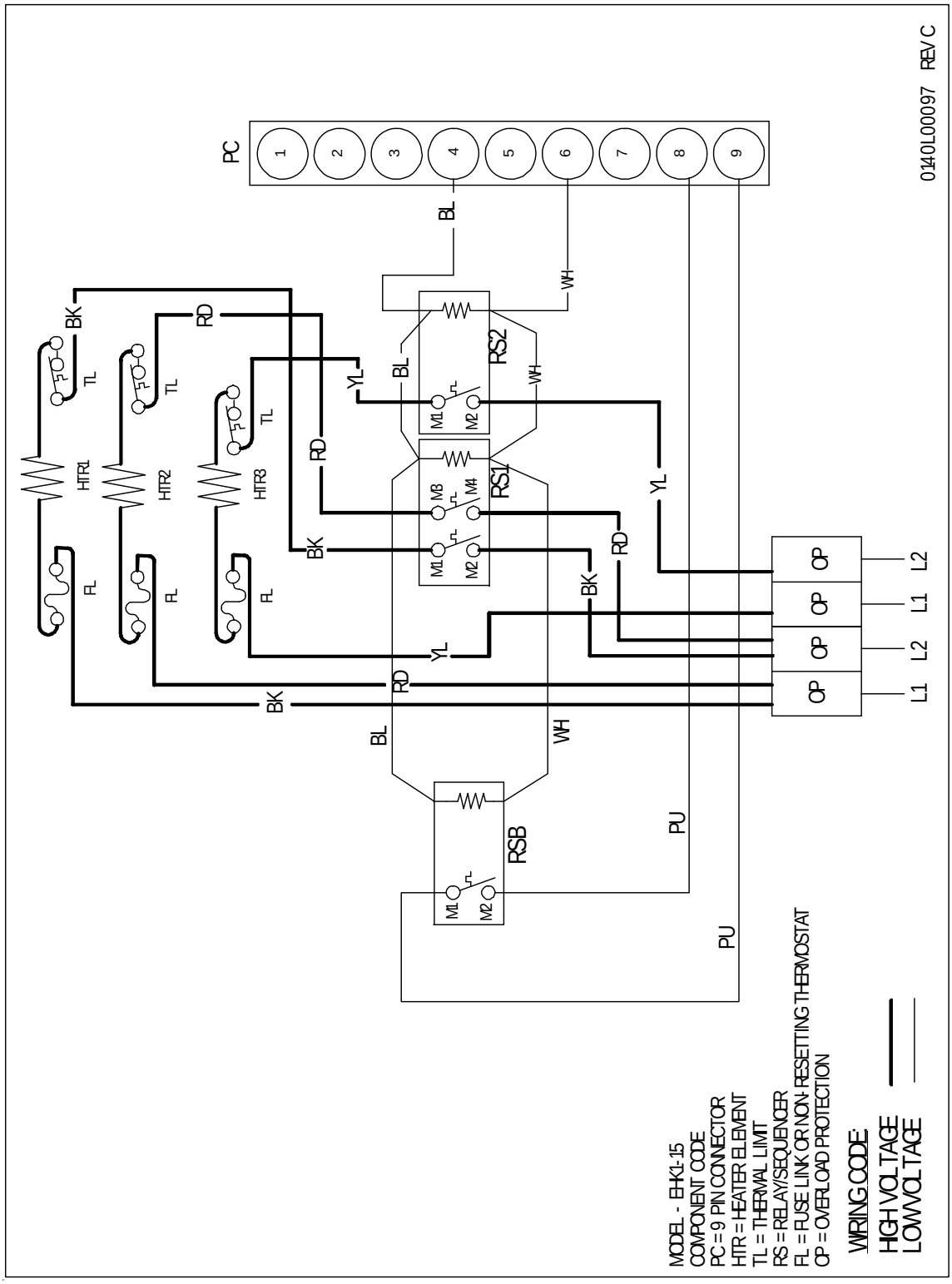

EHK1 - 15 HEAT KIT - 15 KW

Wiring is subject to change. Always refer to the wiring diagram on the unit for the most up-to-date wiring.

HEATER KIT WIRING DIAGRAMS

WARNING

HIGH VOLTAGE!
DISCONNECT ALL POWER BEFORE SERVICING OR INSTALLING THIS UNIT. MULTIPLE POWER SOURCES MAY BE PRESENT. FAILURE TO DO SO MAY CAUSE PROPERTY DAMAGE, PERSONAL INJURY OR DEATH.

FOR UNITS WITH SERIALS BEFORE 1409

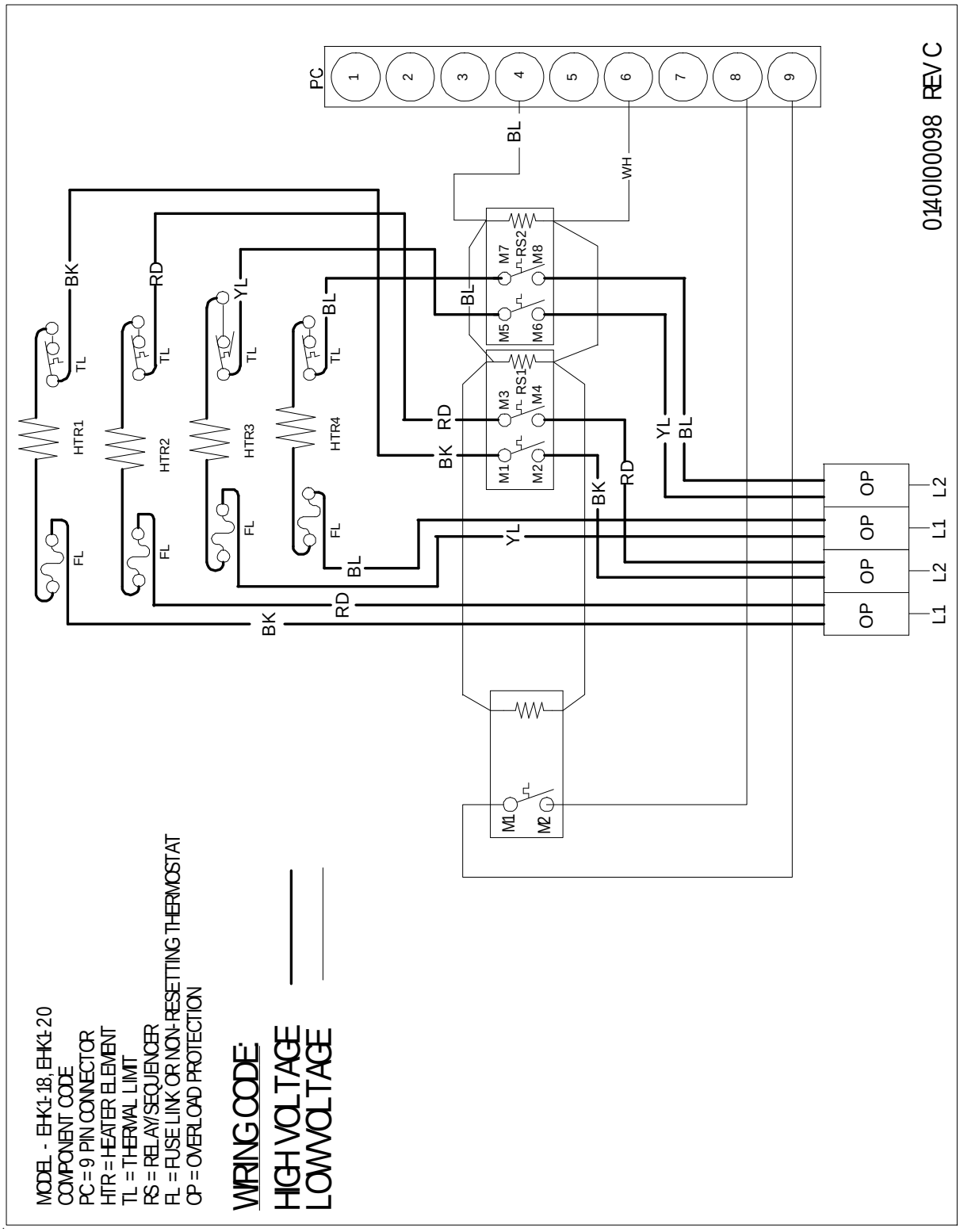

EHK1 - 18 HEAT KIT - 18 KW

EHK*-18 KITS
FOR USE WITH 4 TON UNITS ONLY.

Wiring is subject to change. Always refer to the wiring diagram on the unit for the most up-to-date wiring.

HEATER KIT WIRING DIAGRAMS EHK1-20

WARNING

HIGH VOLTAGE!
DISCONNECT ALL POWER BEFORE SERVICING OR INSTALLING THIS UNIT. MULTIPLE POWER SOURCES MAY BE PRESENT. FAILURE TO DO SO MAY CAUSE PROPERTY DAMAGE, PERSONAL INJURY OR DEATH.

FOR UNITS WITH SERAILS BEFORE 1409

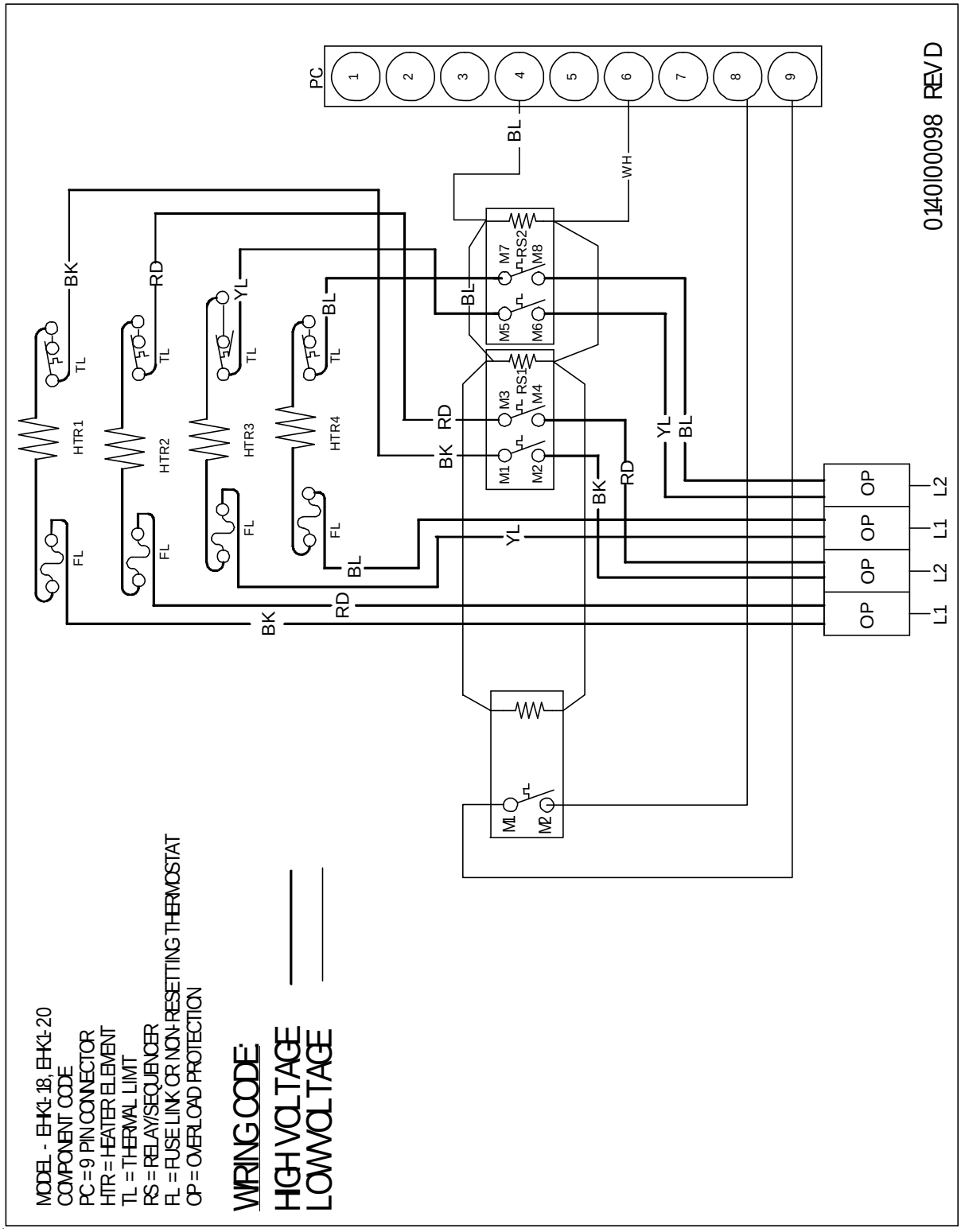

EHK1 - 20 HEAT KIT - 20 KW

Wiring is subject to change. Always refer to the wiring diagram on the unit for the most up-to-date wiring.

HEATER KIT WIRING DIAGRAMS

EHK*-10/EHK*-15/EHK*-16

WARNING

HIGH VOLTAGE!
DISCONNECT ALL POWER BEFORE SERVICING OR INSTALLING THIS UNIT. MULTIPLE POWER SOURCES MAY BE PRESENT. FAILURE TO DO SO MAY CAUSE PROPERTY DAMAGE, PERSONAL INJURY OR DEATH.

FOR UNITS WITH SERIALS BEFORE 1409

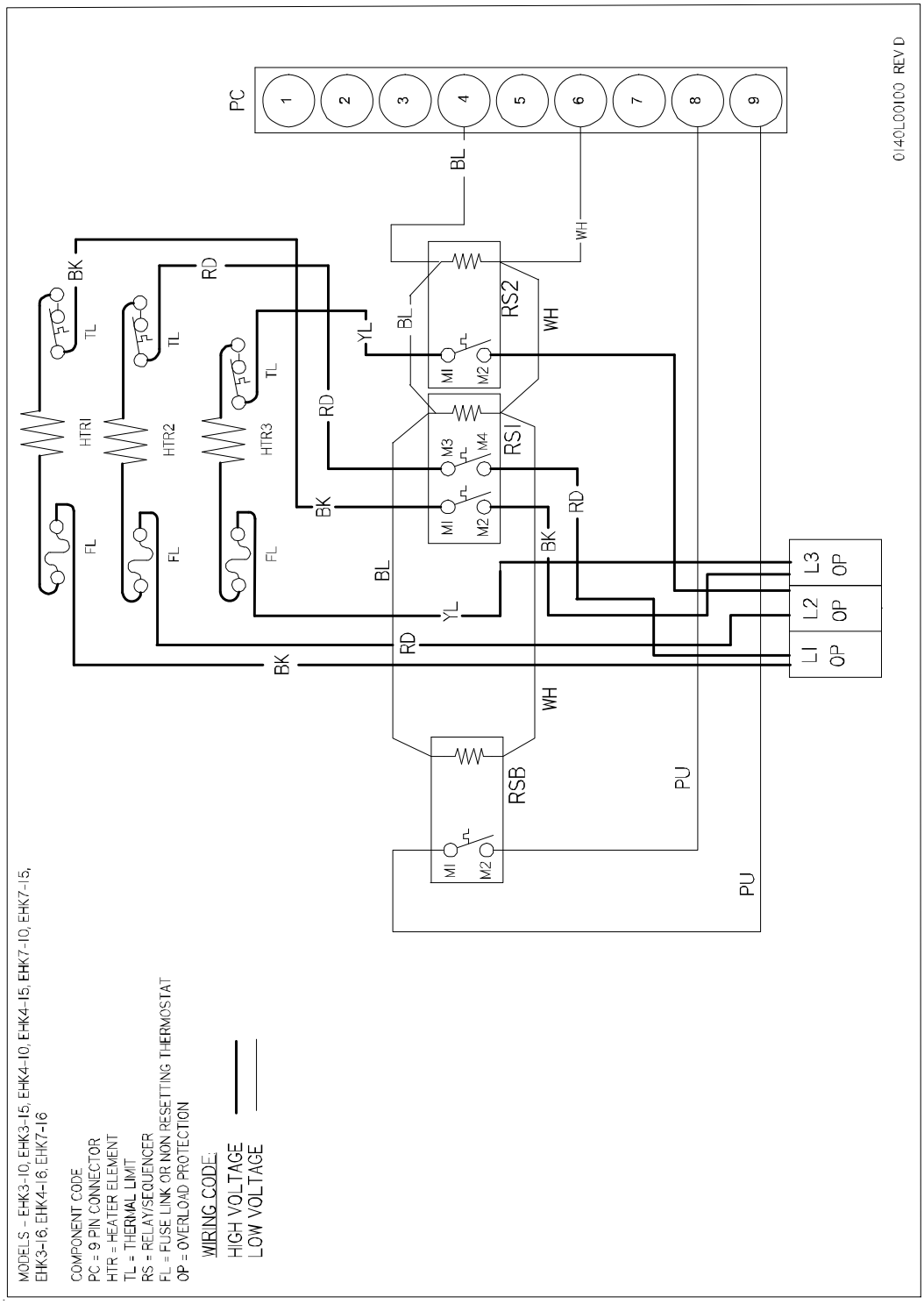

EHK3-10 HEAT KITS - 10 KW, EHK3-15 HEAT KITS - 15 KW

EHK4-10 HEAT KITS - 10 KW, EHK4-15 HEAT KITS - 15 KW

EHK7-10 HEAT KITS - 10 KW, EHK7-15 HEAT KITS - 15 KW

EHK3-16 HEAT KITS - 16 KW

EHK4-16 HEAT KITS - 16 KW

EHK7-16 HEAT KITS - 16 KW

Wiring is subject to change. Always refer to the wiring diagram on the unit for the most up-to-date wiring.

HEATER KIT WIRING DIAGRAMS

EHK[3, 4]-18

WARNING

HIGH VOLTAGE!
DISCONNECT ALL POWER BEFORE SERVICING OR INSTALLING THIS UNIT. MULTIPLE POWER SOURCES MAY BE PRESENT. FAILURE TO DO SO MAY CAUSE PROPERTY DAMAGE, PERSONAL INJURY OR DEATH.

FOR UNITS WITH SERIALS BEFORE 1409

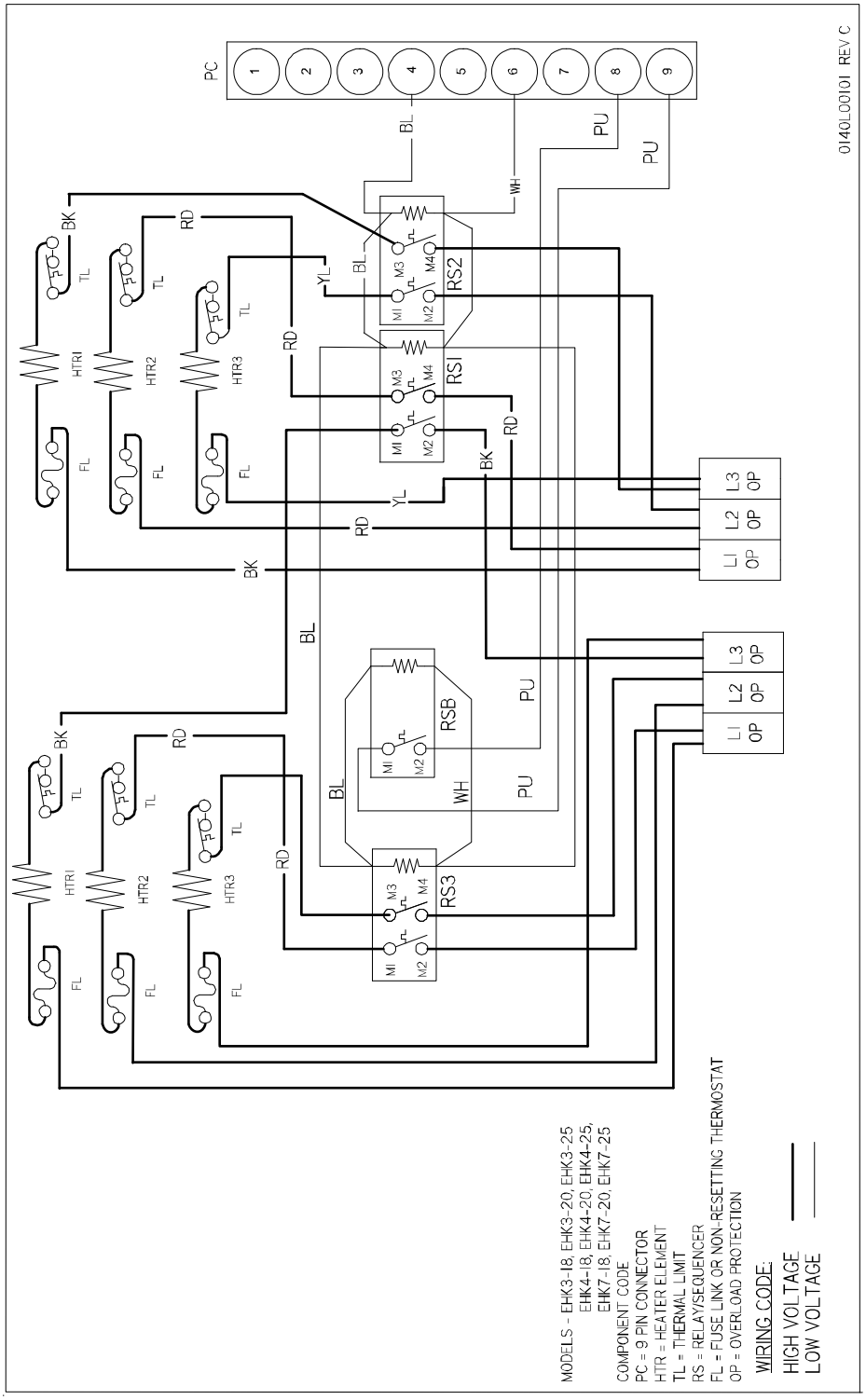

EHK3 - 18 HEAT KIT - 18 KW

EHK4 - 18 HEAT KIT - 18KW

EHK7 - 18 HEAT KIT - 18KW

EHK*-18 KITS

FOR USE WITH 4 TON UNITS ONLY.

Wiring is subject to change. Always refer to the wiring diagram on the unit for the most up-to-date wiring.

HEATER KIT WIRING DIAGRAMS

EHK[3, 4, 7]-20 & 25

WARNING

HIGH VOLTAGE!
DISCONNECT ALL POWER BEFORE SERVICING OR INSTALLING THIS UNIT. MULTIPLE POWER SOURCES MAY BE PRESENT. FAILURE TO DO SO MAY CAUSE PROPERTY DAMAGE, PERSONAL INJURY OR DEATH.

FOR UNITS WITH SERIALS BEFORE 1409

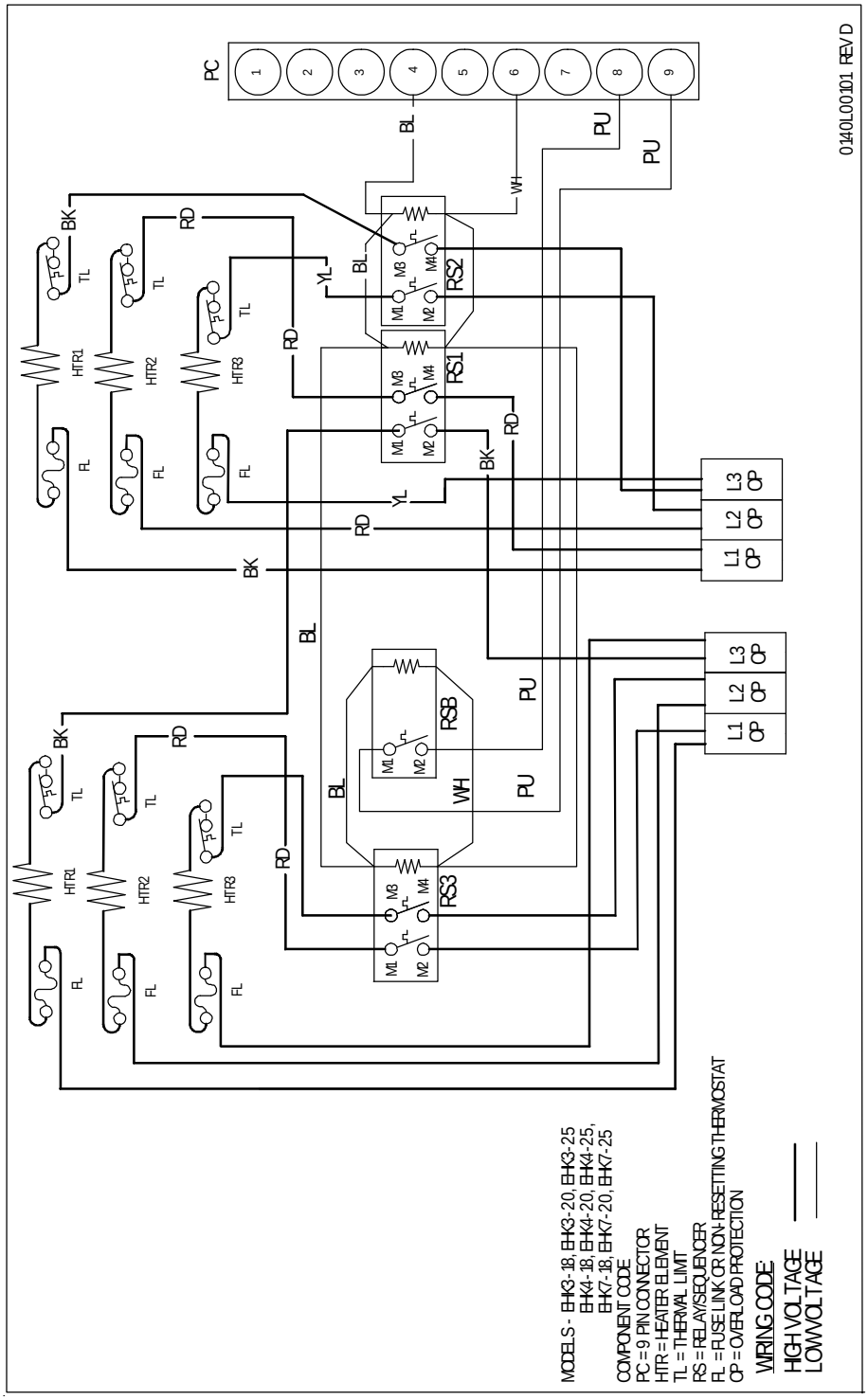

EHK3 - 20 HEAT KIT - 20 KW **EHK3 - 25 HEAT KIT - 25 KW**

EHK4 - 20 HEAT KIT - 20 KW **EHK4 - 25 HEAT KIT - 25 KW**

EHK7 - 20 HEAT KIT - 20 KW **EHK7 - 25 HEAT KIT - 25 KW**

Wiring is subject to change. Always refer to the wiring diagram on the unit for the most up-to-date wiring.

HEATER KIT WIRING DIAGRAMS

EHK1-10

WARNING

HIGH VOLTAGE!
DISCONNECT ALL POWER BEFORE SERVICING OR INSTALLING THIS UNIT. MULTIPLE POWER SOURCES MAY BE PRESENT. FAILURE TO DO SO MAY CAUSE PROPERTY DAMAGE, PERSONAL INJURY OR DEATH.

FOR UNITS WITH SERIALS 1409 AND NEWER

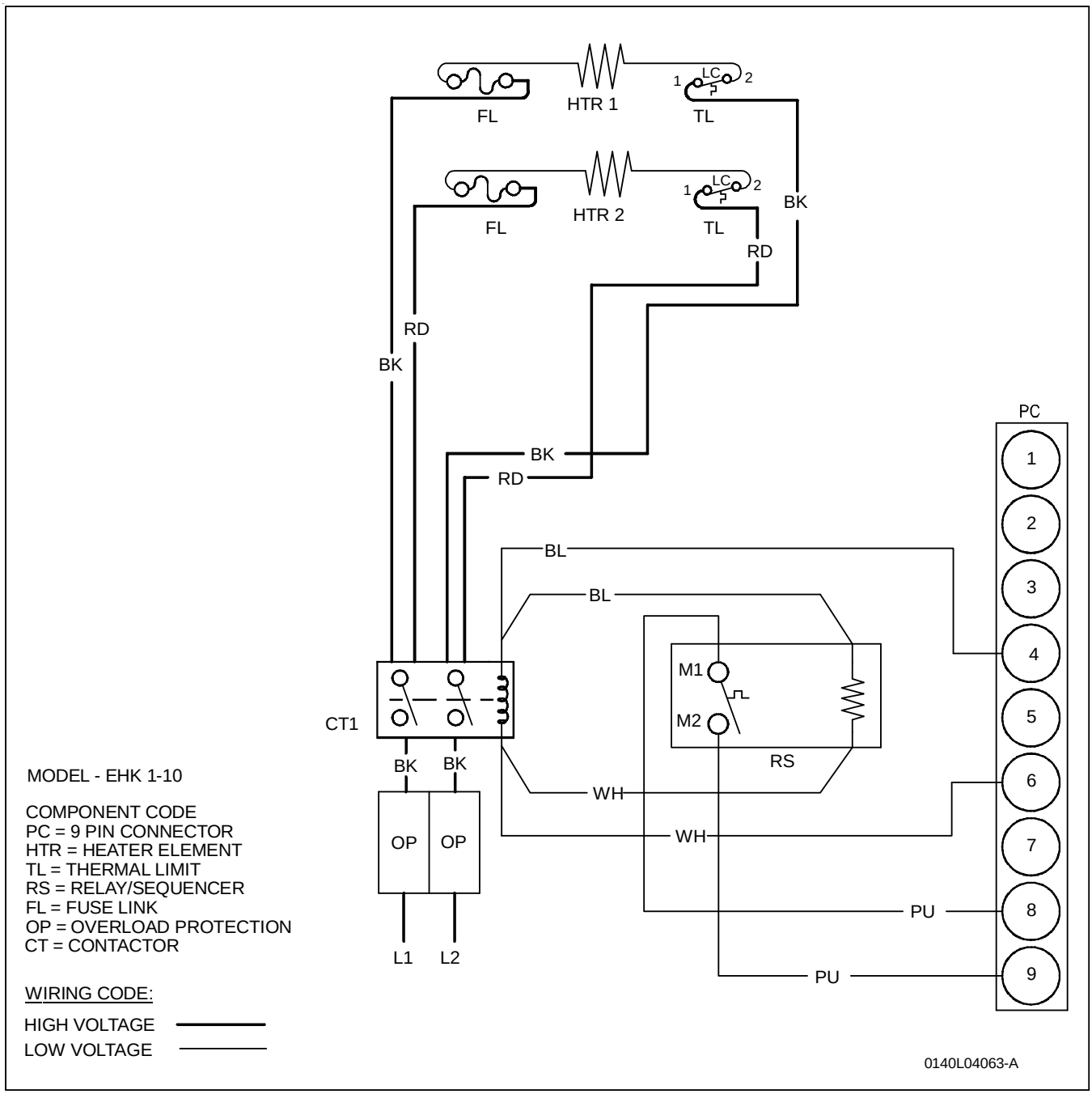

EHK1 - 10 HEAT KIT - 10 KW

Wiring is subject to change. Always refer to the wiring diagram on the unit for the most up-to-date wiring.

HEATER KIT WIRING DIAGRAMS

WARNING

HIGH VOLTAGE!
DISCONNECT ALL POWER BEFORE SERVICING OR INSTALLING THIS UNIT. MULTIPLE POWER SOURCES MAY BE PRESENT. FAILURE TO DO SO MAY CAUSE PROPERTY DAMAGE, PERSONAL INJURY OR DEATH.

FOR UNITS WITH SERIALS 1409 AND NEWER

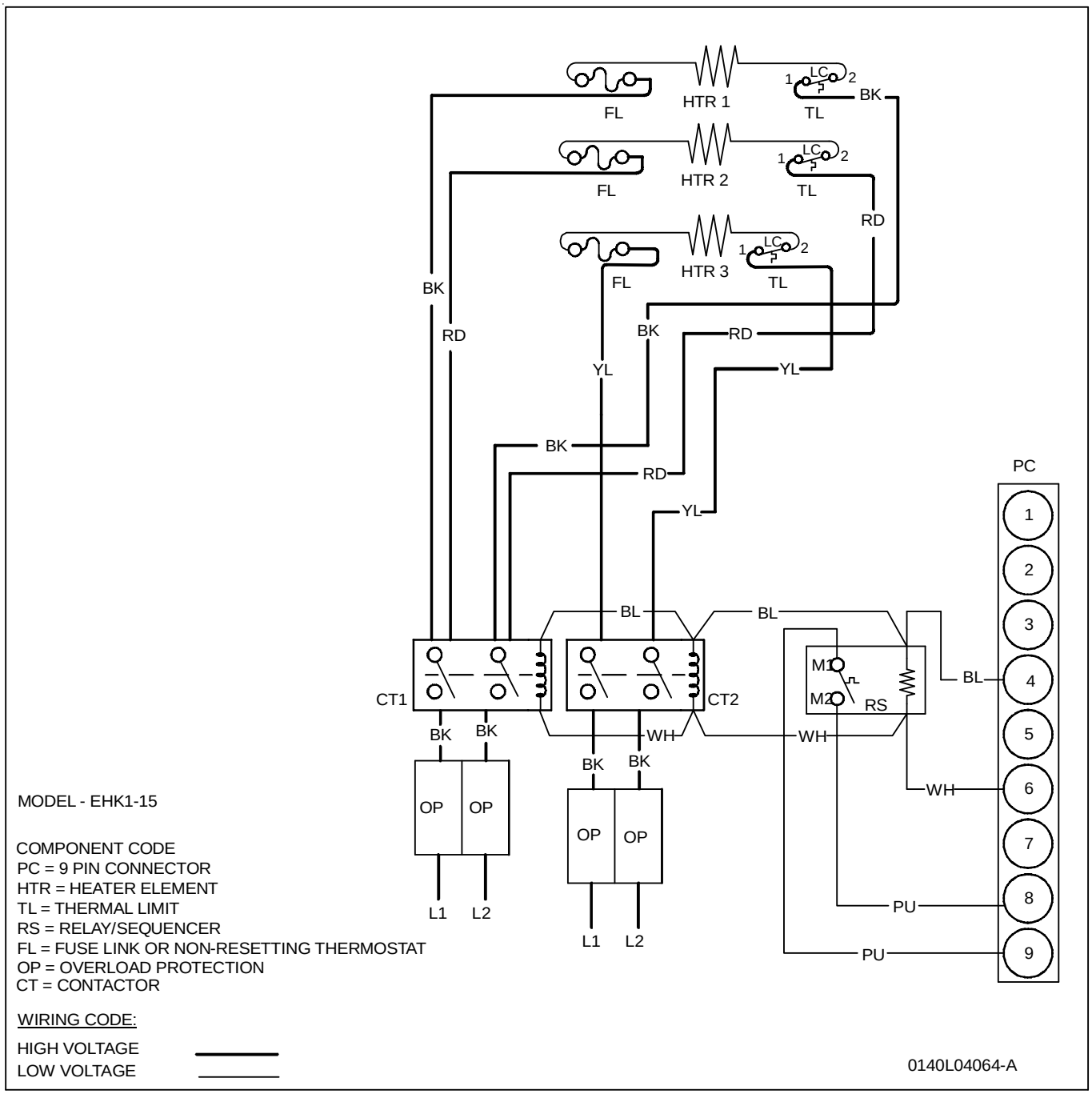

EHK1 - 15 HEAT KIT - 15 KW

Wiring is subject to change. Always refer to the wiring diagram on the unit for the most up-to-date wiring.

HEATER KIT WIRING DIAGRAMS

EHK1-18/20

WARNING

HIGH VOLTAGE!
DISCONNECT ALL POWER BEFORE SERVICING OR INSTALLING THIS UNIT. MULTIPLE POWER SOURCES MAY BE PRESENT. FAILURE TO DO SO MAY CAUSE PROPERTY DAMAGE, PERSONAL INJURY OR DEATH.

FOR UNITS WITH SERIALS 1409 AND NEWER

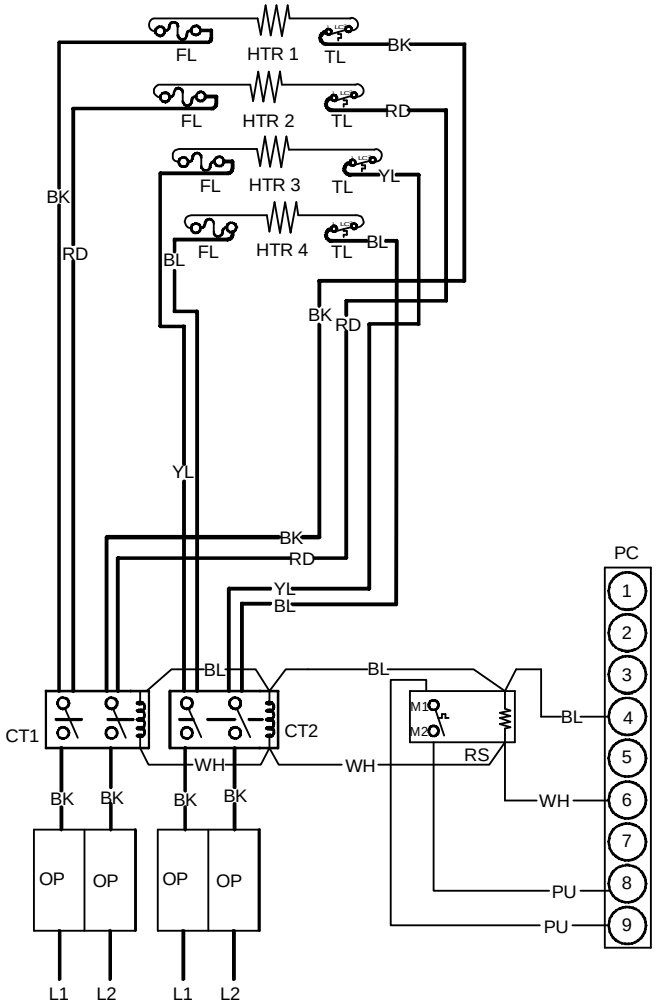

MODEL - EHK1-20 EHK1-18

COMPONENT CODE
PC = 9 PIN CONNECTOR
HTR = HEATER ELEMENT
TL = THERMAL LIMIT
RS = RELAY/SEQUENCER
FL = FUSE LINK OR NON-RESETTING THERMOSTAT
OP = OVERLOAD PROTECTION
CT = CONTACTOR

WIRING CODE:

HIGH VOLTAGE ———
LOW VOLTAGE ———

0140L04065-A

EHK1 - 18 HEAT KIT - 18 KW

EHK1 - 20 HEAT KIT - 20 KW

EHK*-18 KITS

FOR USE WITH 4 TON UNITS ONLY.

Wiring is subject to change. Always refer to the wiring diagram on the unit for the most up-to-date wiring.

HEATER KIT WIRING DIAGRAMS

EHK*-10/EHK*-15

WARNING

HIGH VOLTAGE!
DISCONNECT ALL POWER BEFORE SERVICING OR INSTALLING THIS UNIT. MULTIPLE POWER SOURCES MAY BE PRESENT. FAILURE TO DO SO MAY CAUSE PROPERTY DAMAGE, PERSONAL INJURY OR DEATH.

FOR UNITS WITH SERIALS 1409 AND NEWER

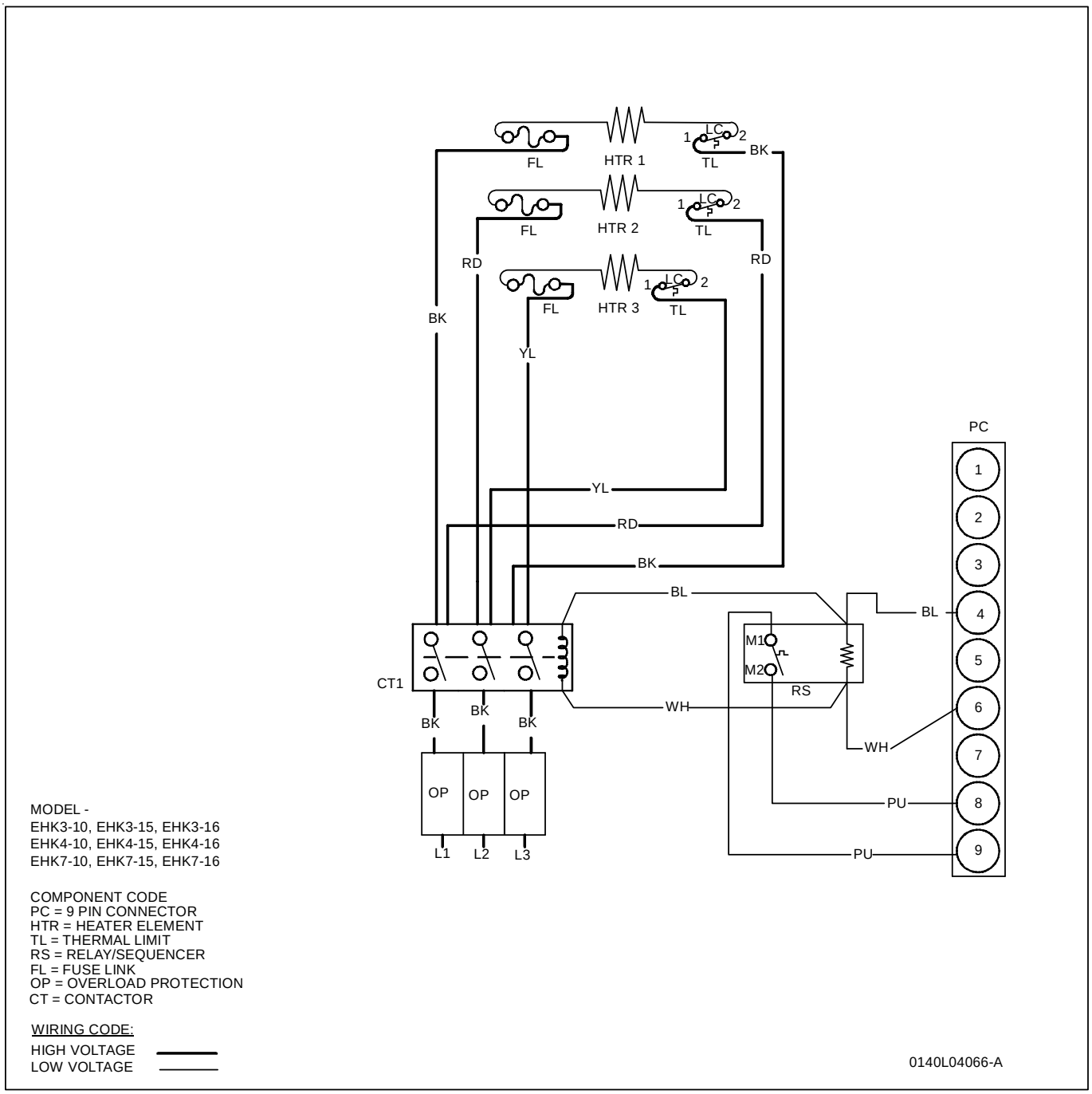

EHK3-10 HEAT KITS - 10 KW, EHK3-15 HEAT KITS - 15 KW

EHK4-10 HEAT KITS - 10 KW, EHK4-15 HEAT KITS - 15 KW

EHK7-10 HEAT KITS - 10 KW, EHK7-15 HEAT KITS - 15 KW

Wiring is subject to change. Always refer to the wiring diagram on the unit for the most up-to-date wiring.

HEATER KIT WIRING DIAGRAMS

EHK*-18/EHK*-20

WARNING

HIGH VOLTAGE!
DISCONNECT ALL POWER BEFORE SERVICING OR INSTALLING THIS UNIT. MULTIPLE POWER SOURCES MAY BE PRESENT. FAILURE TO DO SO MAY CAUSE PROPERTY DAMAGE, PERSONAL INJURY OR DEATH.

FOR UNITS WITH SERIALS 1409 AND NEWER

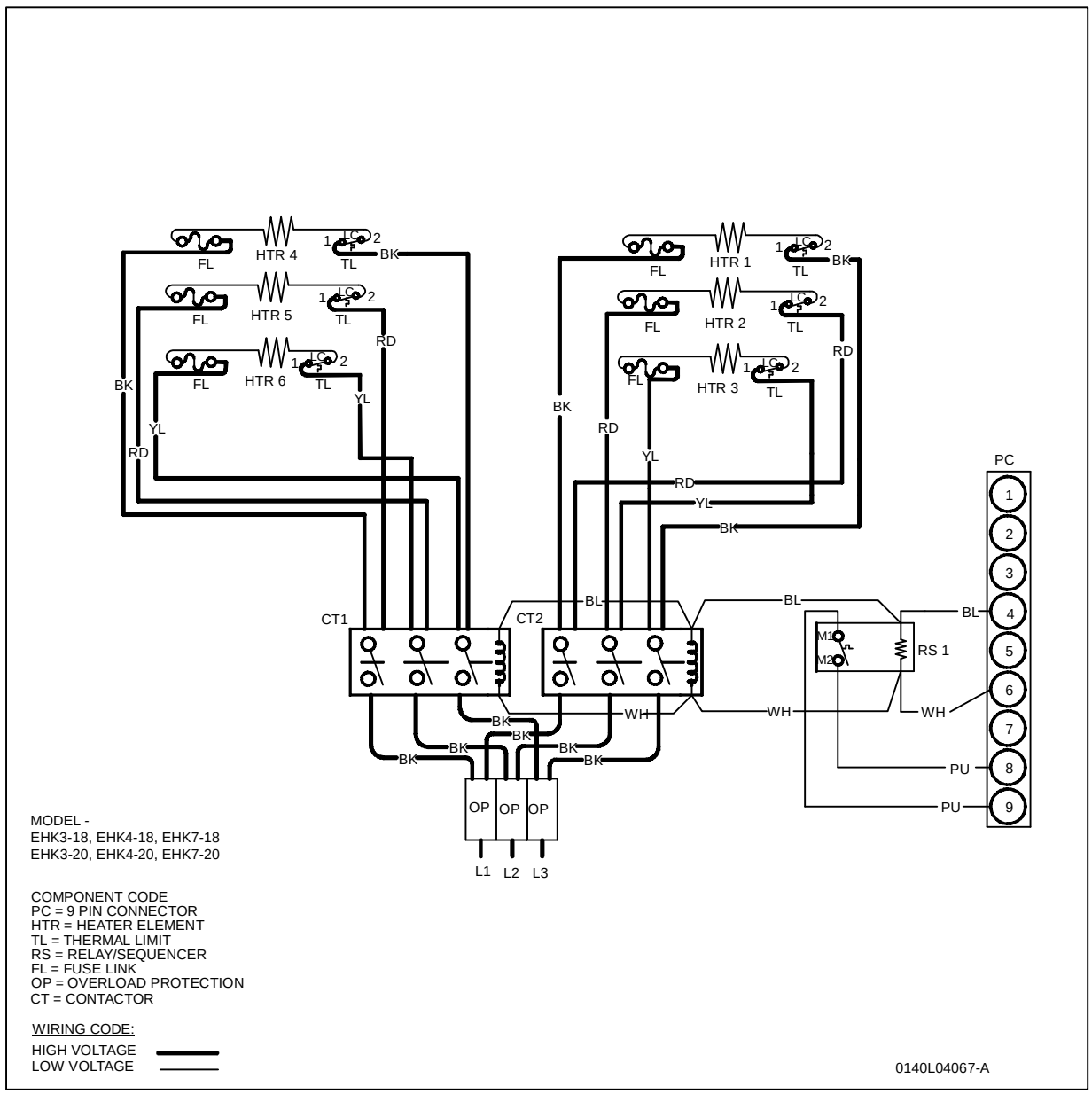

EHK3 - 18 HEAT KIT - 18KW
EHK4 - 18 HEAT KIT - 18KW
EHK7 - 18 HEAT KIT - 18KW

EHK3 - 20 HEAT KIT - 20KW
EHK4 - 20 HEAT KIT - 20KW
EHK7 - 20 HEAT KIT - 20KW

EHK*-18 KITS

FOR USE WITH 4 TON UNITS ONLY.

Wiring is subject to change. Always refer to the wiring diagram on the unit for the most up-to-date wiring.

HEATER KIT WIRING DIAGRAMS

EHK*- 25

WARNING

HIGH VOLTAGE!
DISCONNECT ALL POWER BEFORE SERVICING OR INSTALLING THIS UNIT. MULTIPLE POWER SOURCES MAY BE PRESENT. FAILURE TO DO SO MAY CAUSE PROPERTY DAMAGE, PERSONAL INJURY OR DEATH.

FOR UNITS WITH SERIALS 1409 AND NEWER

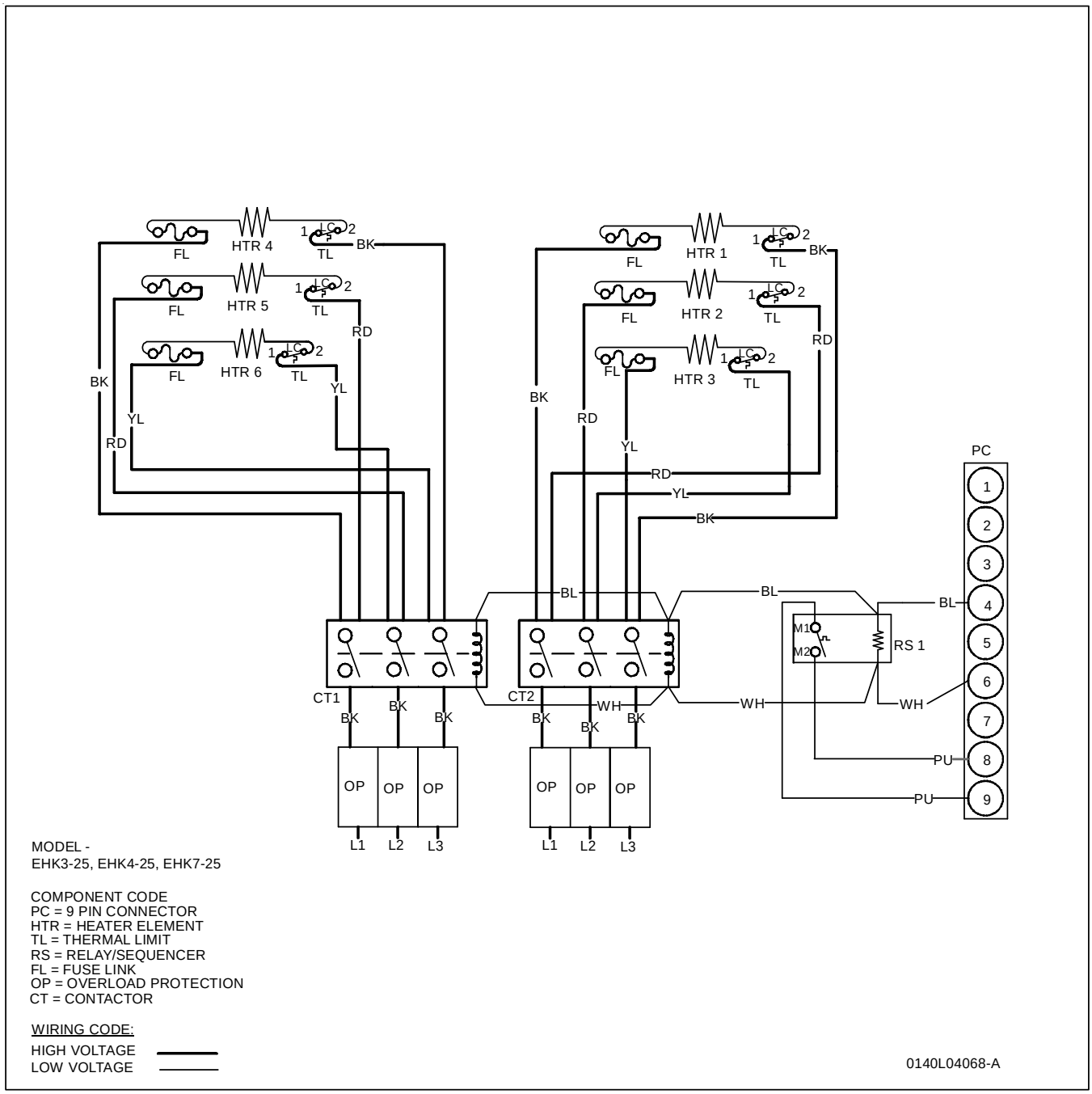

EHK3 - 25 HEAT KIT - 25 KW

EHK4 - 25 HEAT KIT - 25 KW

EHK7 - 25 HEAT KIT - 25 KW

Wiring is subject to change. Always refer to the wiring diagram on the unit for the most up-to-date wiring.

DCC COMMERCIAL
3-6 Ton Packaged Air Conditioner Unit
WIRING DIAGRAMS

For units with DDC control see manual RSD6412018* for wiring diagrams

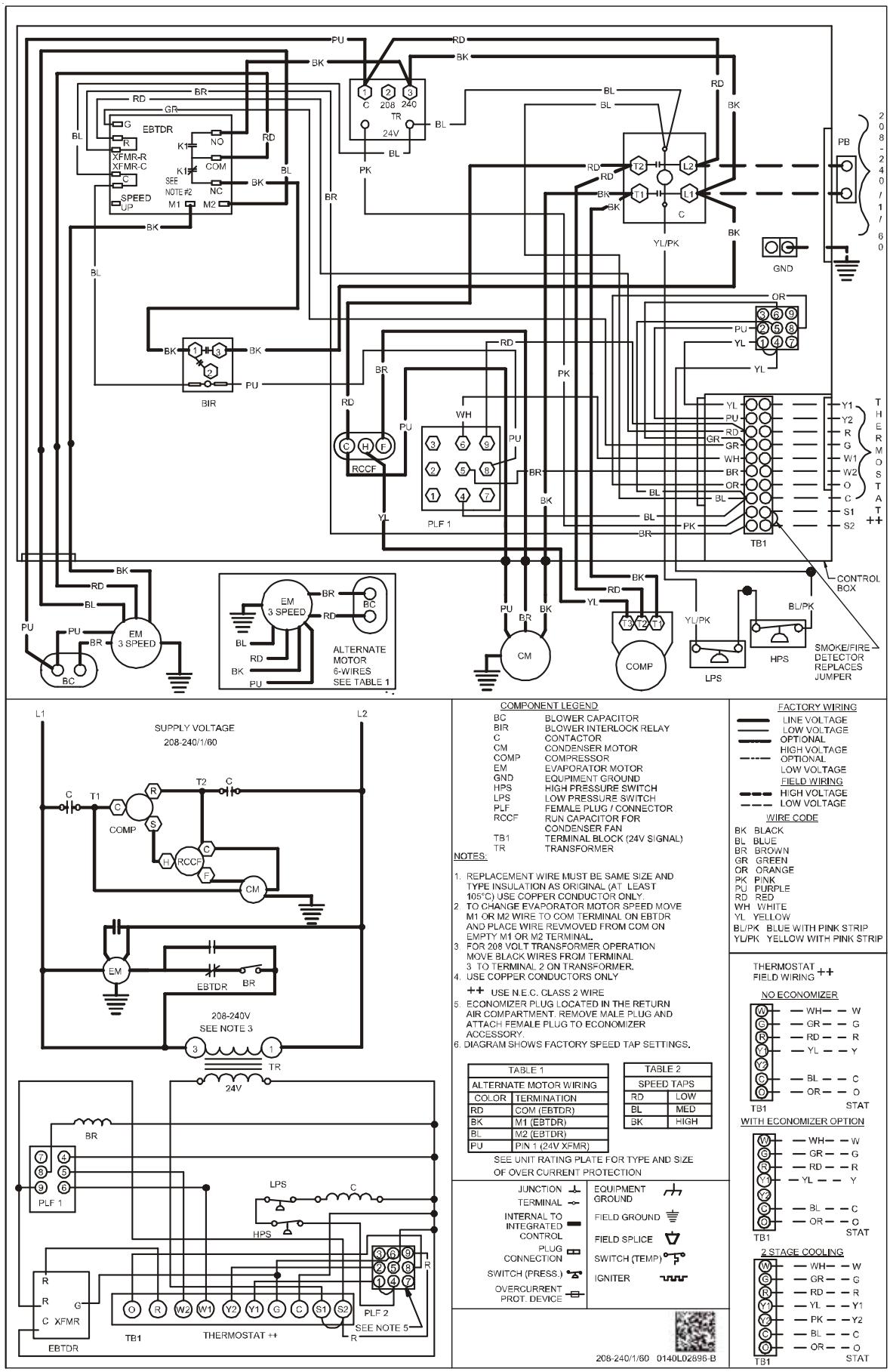

HIGH VOLTAGE!
DISCONNECT ALL POWER BEFORE SERVICING OR INSTALLING THIS UNIT. MULTIPLE POWER SOURCES MAY BE PRESENT. FAILURE TO DO SO MAY CAUSE PROPERTY DAMAGE, PERSONAL INJURY OR DEATH.

WARNING

Wiring is subject to change. Always refer to the wiring diagram on the unit for the most up-to-date wiring.

UNIT WIRING DIAGRAMS DCC060XXX1D***A*

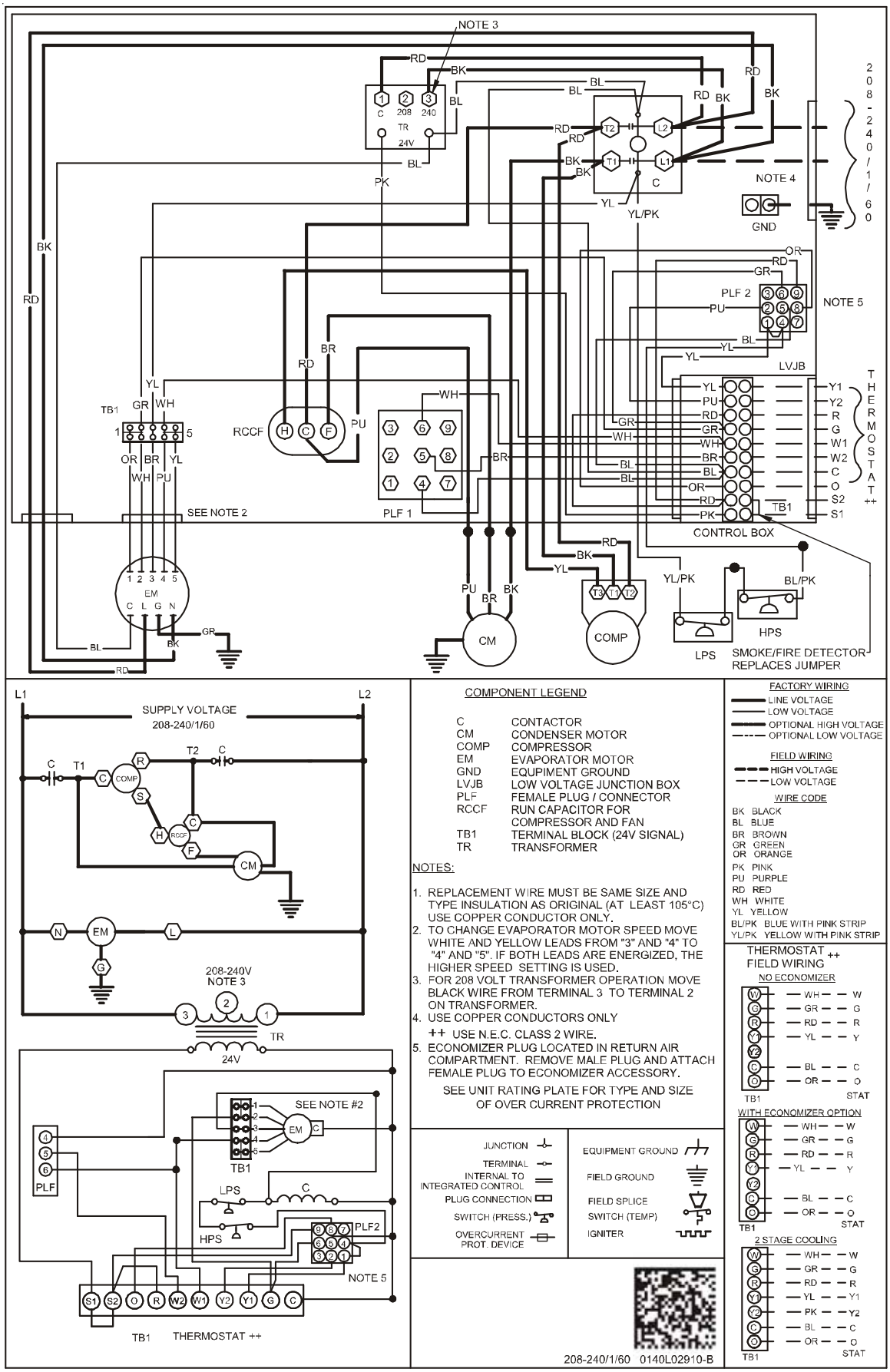

WARNING

HIGH VOLTAGE! DISCONNECT ALL POWER BEFORE SERVICING OR INSTALLING THIS UNIT. MULTIPLE POWER SOURCES MAY BE PRESENT. FAILURE TO DO SO MAY CAUSE PROPERTY DAMAGE, PERSONAL INJURY OR DEATH.

Wiring is subject to change. Always refer to the wiring diagram on the unit for the most up-to-date wiring.

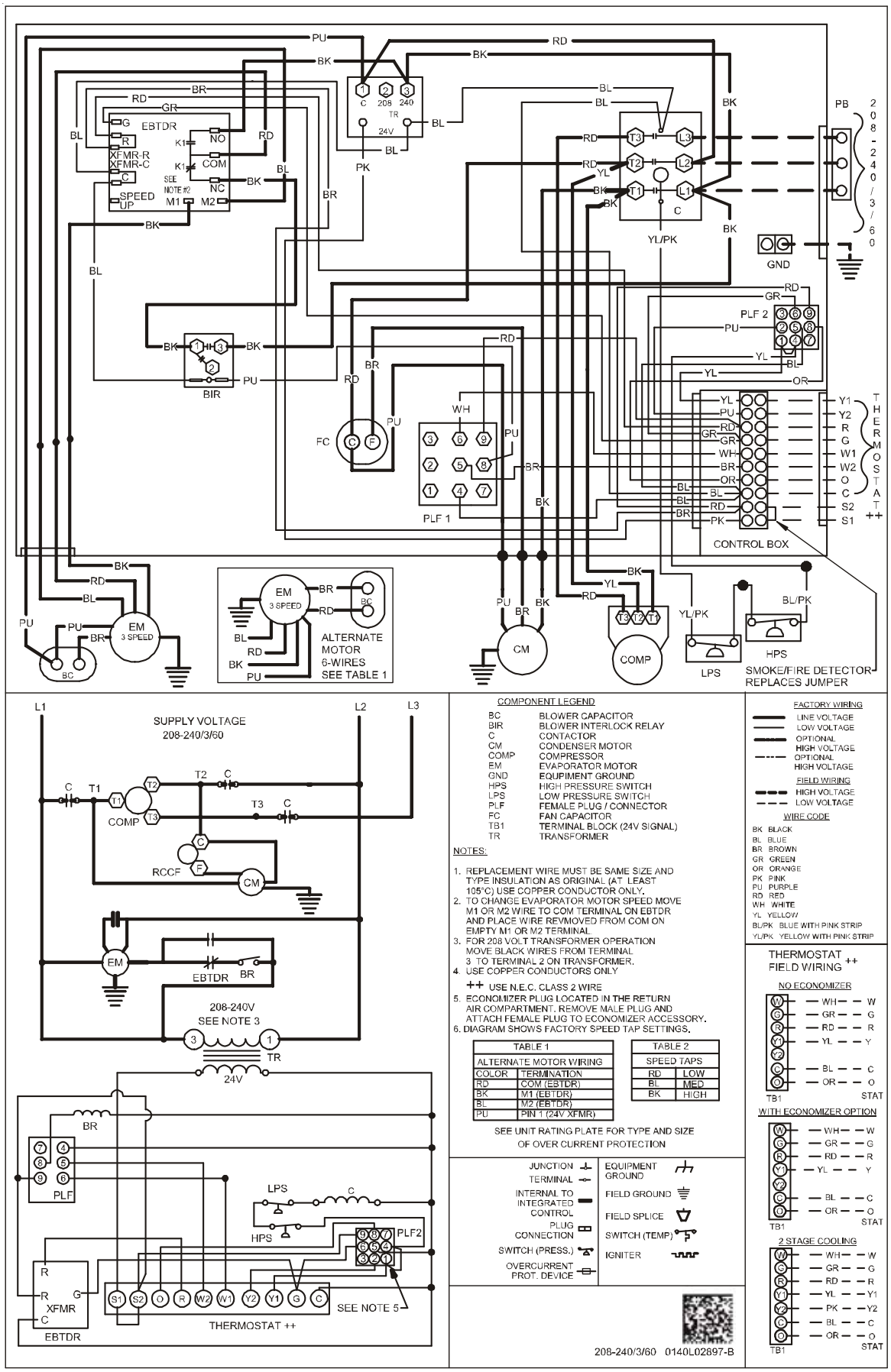

WARNING

HIGH VOLTAGE! DISCONNECT ALL POWER BEFORE SERVICING OR INSTALLING THIS UNIT. MULTIPLE POWER SOURCES MAY BE PRESENT. FAILURE TO DO SO MAY CAUSE PROPERTY DAMAGE, PERSONAL INJURY OR DEATH.

Wiring is subject to change. Always refer to the wiring diagram on the unit for the most up-to-date wiring.

UNIT WIRING DIAGRAMS DCC060XXX3D***A*

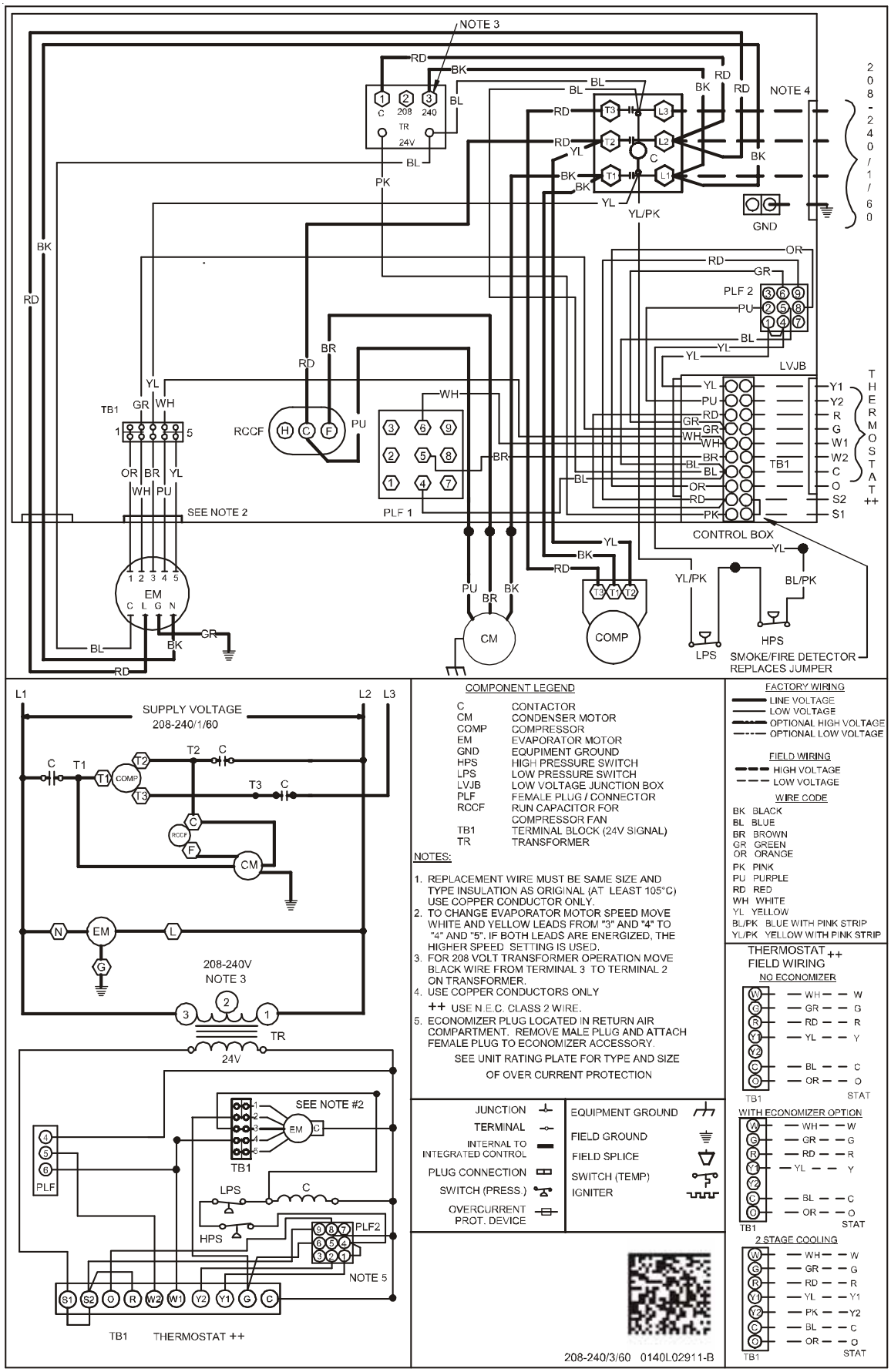

WARNING

HIGH VOLTAGE!
DISCONNECT ALL POWER BEFORE SERVICING OR INSTALLING THIS UNIT. MULTIPLE POWER SOURCES MAY BE PRESENT. FAILURE TO DO SO MAY CAUSE PROPERTY DAMAGE, PERSONAL INJURY OR DEATH.

Wiring is subject to change. Always refer to the wiring diagram on the unit for the most up-to-date wiring.

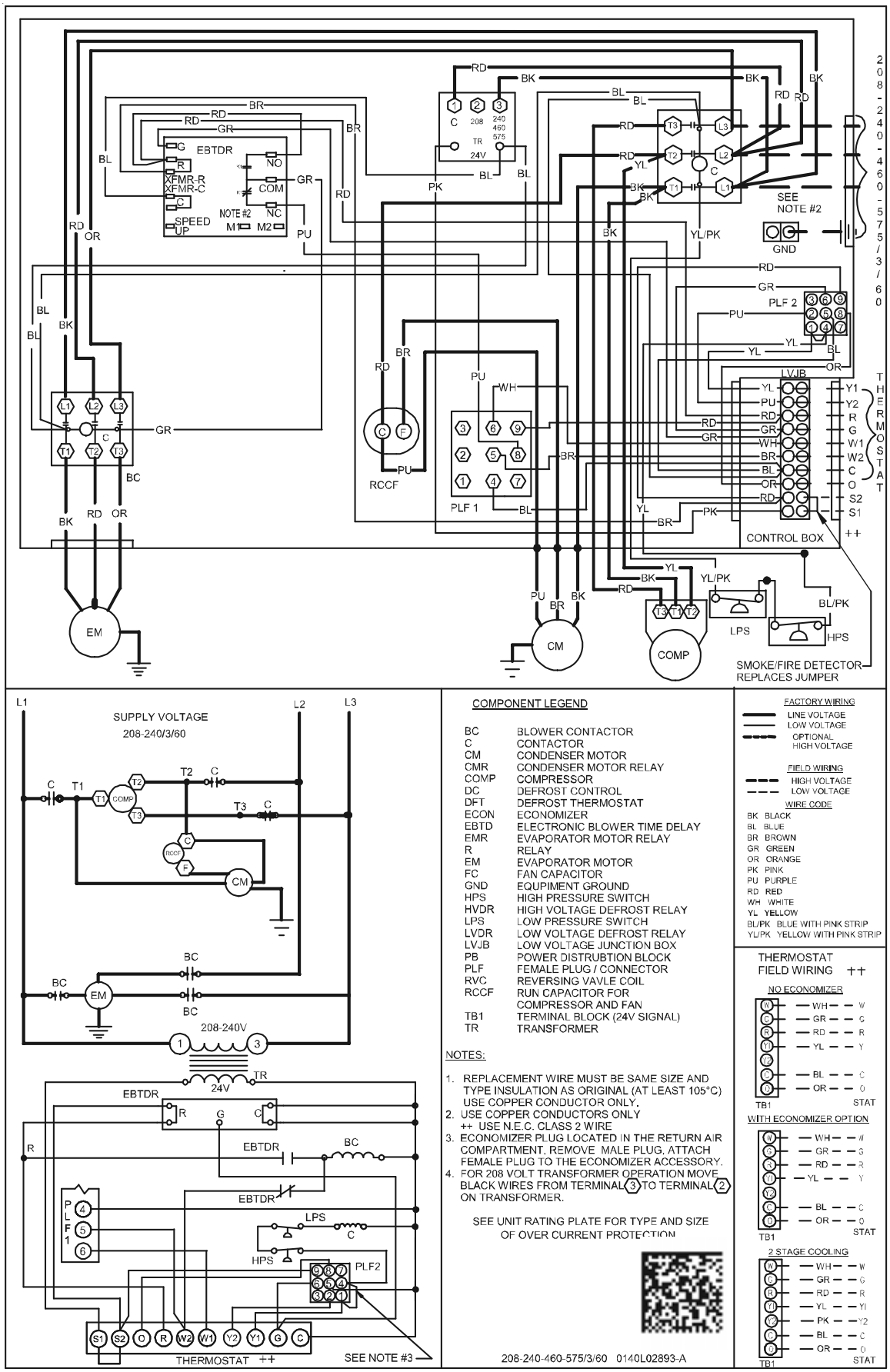

WARNING

HIGH VOLTAGE! DISCONNECT ALL POWER BEFORE SERVICING OR INSTALLING THIS UNIT. MULTIPLE POWER SOURCES MAY BE PRESENT. FAILURE TO DO SO MAY CAUSE PROPERTY DAMAGE, PERSONAL INJURY OR DEATH.

Wiring is subject to change. Always refer to the wiring diagram on the unit for the most up-to-date wiring.

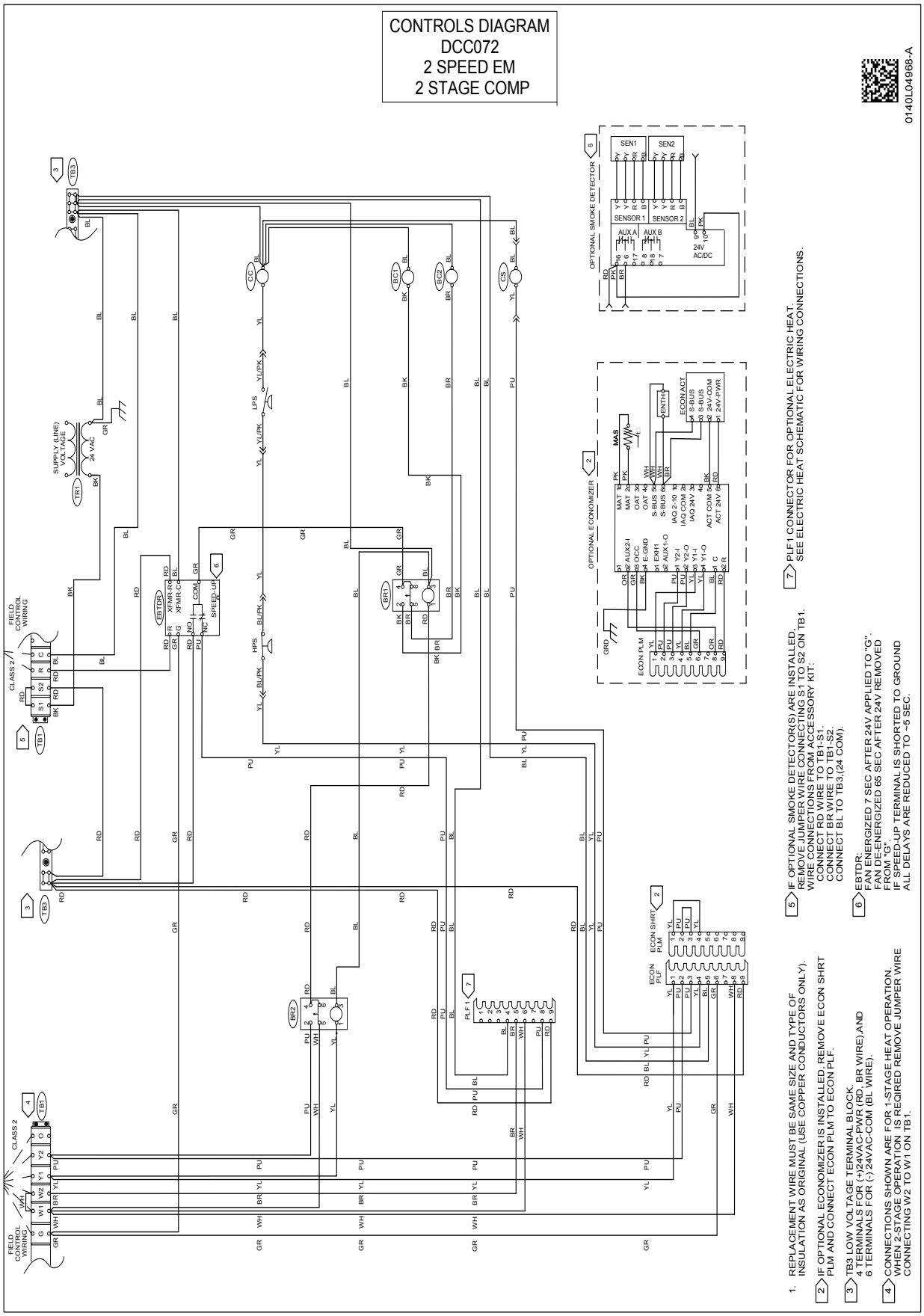

WARNING

HIGH VOLTAGE!
DISCONNECT ALL POWER BEFORE SERVICING OR INSTALLING THIS UNIT. MULTIPLE POWER SOURCES MAY BE PRESENT. FAILURE TO DO SO MAY CAUSE PROPERTY DAMAGE, PERSONAL INJURY OR DEATH.

Wiring is subject to change. Always refer to the wiring diagram on the unit for the most up-to-date wiring.

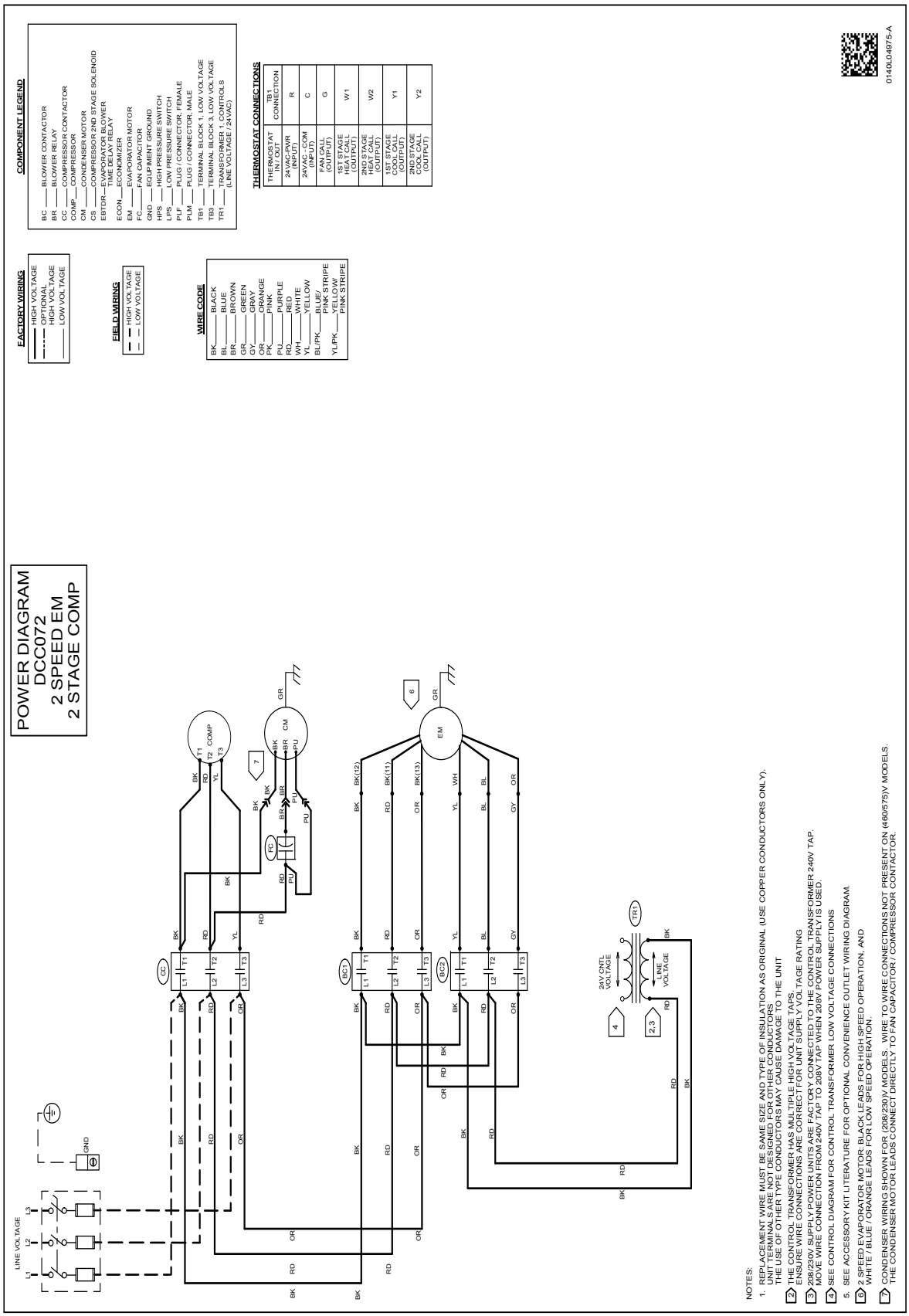

WARNING

HIGH VOLTAGE!
DISCONNECT ALL POWER BEFORE SERVICING OR INSTALLING THIS UNIT. MULTIPLE POWER SOURCES MAY BE PRESENT. FAILURE TO DO SO MAY CAUSE PROPERTY DAMAGE, PERSONAL INJURY OR DEATH.

Wiring is subject to change. Always refer to the wiring diagram on the unit for the most up-to-date wiring.

DCG COMMERCIAL
3-6 Ton Packaged Gas/Electric Unit
WIRING DIAGRAMS

For units with DDC control see manual RSD6412018* for wiring diagrams

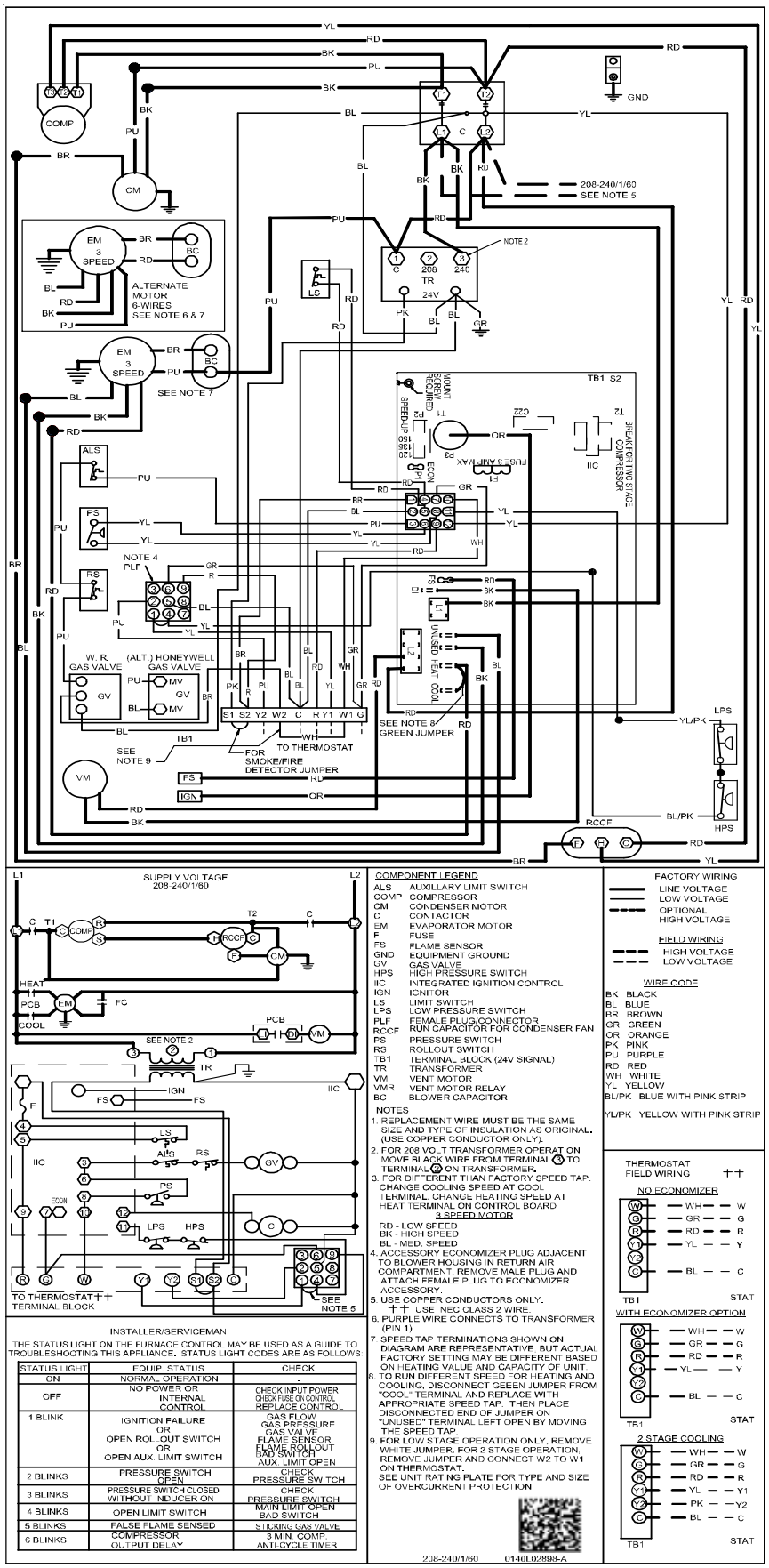

COMPONENT LEGEND

ALS	AUXILLARY LIMIT SWITCH
COMP	COMPRESSOR
CM	CONDENSER MOTOR
C	CONTACTOR
EM	EVAPORATOR MOTOR
F	FUSE
FS	FLAME SENSOR
GND	EQUIPMENT GROUND
GV	GAS VALVE
HPS	HIGH PRESSURE SWITCH
IIC	INTEGRATED IGNITION CONTROL
IGN	IGNITOR
LS	LIMIT SWITCH
LPS	LOW PRESSURE SWITCH
PLF	FEMALE PLUG/CONNECTOR
RCCF	RUN CAPACITOR FOR CONDENSER FAN
PS	PRESSURE SWITCH
RS	ROLLOUT SWITCH
TB1	TERMINAL BLOCK (24V SIGNAL)
TR	TRANSFORMER
VM	VENT MOTOR
VMR	VENT MOTOR RELAY
BC	BLOWER CAPACITOR

NOTES

1. REPLACEMENT WIRE MUST BE THE SAME SIZE AND TYPE OF INSULATION AS ORIGINAL. (USE COPPER CONDUCTOR ONLY).
2. FOR 208 VOLT TRANSFORMER OPERATION MOVE BLACK WIRE FROM TERMINAL 3 TO TERMINAL 2 ON TRANSFORMER.
3. FOR DIFFERENT THAN FACTORY SPEED TAP, CHANGE COOLING SPEED AT COOL TERMINAL, CHANGE HEATING SPEED AT HEAT TERMINAL ON CONTROL BOARD

   3 SPEED MOTOR

   RD - LOW SPEED
   BK - HIGH SPEED
   BL - MED. SPEED
4. ACCESSORY ECONOMIZER PLUG ADJACENT TO BLOWER HOUSING IN RETURN AIR COMPARTMENT. REMOVE MALE PLUG AND ATTACH FEMALE PLUG TO ECONOMIZER ACCESSORY.
5. USE COPPER CONDUCTORS ONLY.
   ++ USE NEC CLASS 2 WIRE.
6. PURPLE WIRE CONNECTS TO TRANSFORMER (PIN 1).
7. SPEED TAP TERMINATIONS SHOWN ON DIAGRAM ARE REPRESENTATIVE BUT ACTUAL FACTORY SETTING MAY BE DIFFERENT BASED ON HEATING VALUE AND CAPACITY OF UNIT.
8. TO RUN DIFFERENT SPEED FOR HEATING AND COOLING, DISCONNECT GEEEN JUMPER FROM "COOL" TERMINAL AND REPLACE WITH APPROPRIATE SPEED TAP. THEN PLACE DISCONNECTED END OF JUMPER ON "UNUSED" TERMINAL LEFT OPEN BY MOVING THE SPEED TAP.
9. FOR LOW STAGE OPERATION ONLY, REMOVE WHITE JUMPER. FOR 2 STAGE OPERATION, REMOVE JUMPER AND CONNECT W2 TO W1 ON THERMOSTAT.
   SEE UNIT RATING PLATE FOR TYPE AND SIZE OF OVERCURRENT PROTECTION.

FACTORY WIRING
- LINE VOLTAGE
- LOW VOLTAGE
- OPTIONAL HIGH VOLTAGE

FIELD WIRING
- HIGH VOLTAGE
- LOW VOLTAGE

WIRE CODE

BK	BLACK
BL	BLUE
BR	BROWN
GR	GREEN
OR	ORANGE
PK	PINK
PU	PURPLE
RD	RED
WH	WHITE
YL	YELLOW
BL/PK	BLUE WITH PINK STRIP
YL/PK	YELLOW WITH PINK STRIP

THERMOSTAT FIELD WIRING ++

NO ECONOMIZER

WITH ECONOMIZER OPTION

2 STAGE COOLING

INSTALLER/SERVICEMAN

THE STATUS LIGHT ON THE FURNACE CONTROL MAY BE USED AS A GUIDE TO TROUBLESHOOTING THIS APPLIANCE. STATUS LIGHT CODES ARE AS FOLLOWS:

STATUS LIGHT	EQUIP. STATUS	CHECK
ON	NORMAL OPERATION	-
OFF	NO POWER OR INTERNAL CONTROL	CHECK INPUT POWER CHECK FUSE ON CONTROL REPLACE CONTROL
1 BLINK	IGNITION FAILURE OR OPEN ROLLOUT SWITCH OR OPEN AUX. LIMIT SWITCH	GAS FLOW GAS PRESSURE GAS VALVE FLAME SENSOR FLAME ROLLOUT BAD SWITCH AUX. LIMIT OPEN
2 BLINKS	PRESSURE SWITCH OPEN	CHECK PRESSURE SWITCH
3 BLINKS	PRESSURE SWITCH CLOSED WITHOUT INDUCER ON	CHECK PRESSURE SWITCH
4 BLINKS	OPEN LIMIT SWITCH	MAIN LIMIT OPEN BAD SWITCH
5 BLINKS	FALSE FLAME SENSED	STICKING GAS VALVE
6 BLINKS	COMPRESSOR OUTPUT DELAY	3 MIN. COMP. ANTI-CYCLE TIMER

WARNING

HIGH VOLTAGE! DISCONNECT ALL POWER BEFORE SERVICING OR INSTALLING THIS UNIT. MULTIPLE POWER SOURCES MAY BE PRESENT. FAILURE TO DO SO MAY CAUSE PROPERTY DAMAGE, PERSONAL INJURY OR DEATH.

Wiring is subject to change. Always refer to the wiring diagram on the unit for the most up-to-date wiring.

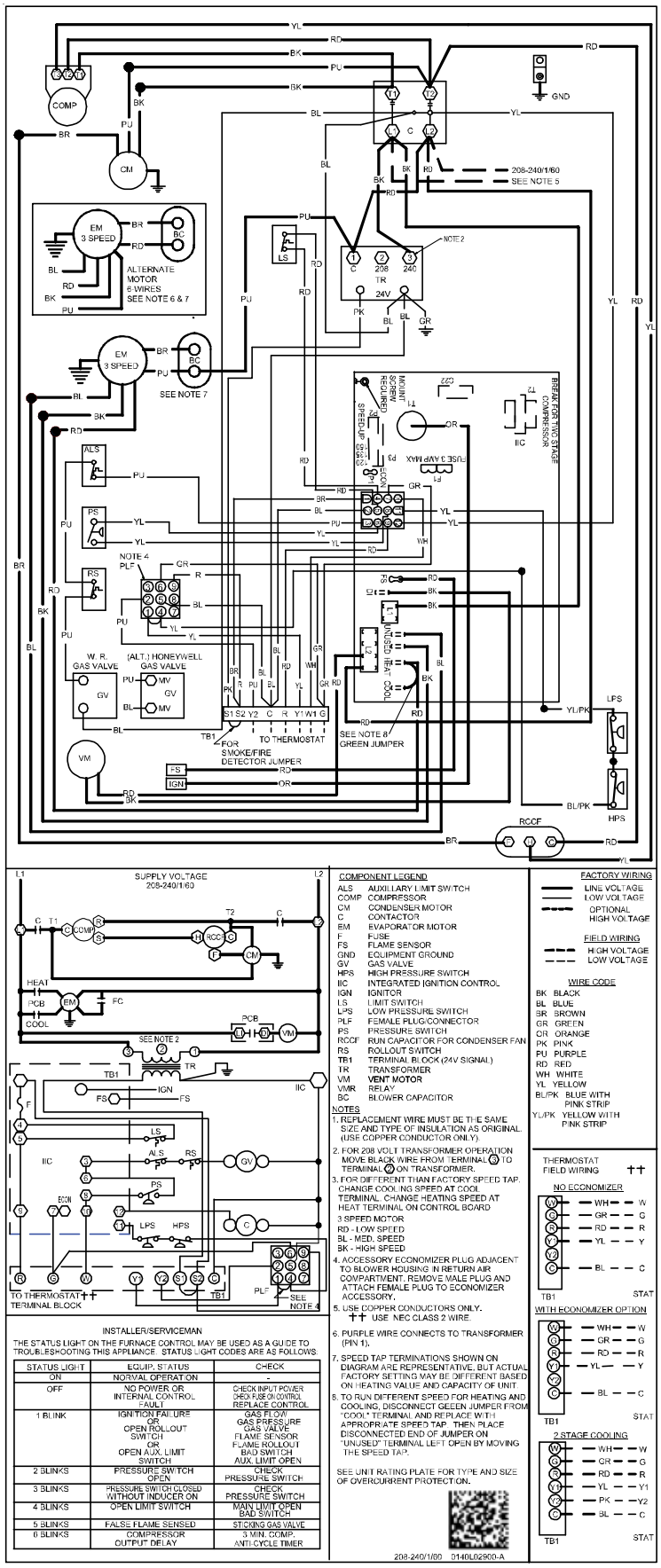

INSTALLER/SERVICEMAN

THE STATUS LIGHT ON THE FURNACE CONTROL MAY BE USED AS A GUIDE TO TROUBLESHOOTING THIS APPLIANCE. STATUS LIGHT CODES ARE AS FOLLOWS:

STATUS LIGHT	EQUIP. STATUS	CHECK
ON	NORMAL OPERATION	-
OFF	NO POWER OR INTERNAL CONTROL FAULT	CHECK INPUT POWER CHECK FUSE ON CONTROL REPLACE CONTROL
1 BLINK	IGNITION FAILURE OR OPEN ROLLOUT SWITCH OR OPEN AUX. LIMIT SWITCH	GAS FLOW GAS PRESSURE GAS VALVE FLAME SENSOR FLAME ROLLOUT BAD SWITCH AUX. LIMIT OPEN
2 BLINKS	PRESSURE SWITCH OPEN	CHECK PRESSURE SWITCH
3 BLINKS	PRESSURE SWITCH CLOSED WITHOUT INDUCER ON	CHECK PRESSURE SWITCH
4 BLINKS	OPEN LIMIT SWITCH	MAIN LIMIT OPEN BAD SWITCH
5 BLINKS	FALSE FLAME SENSED	STICKING GAS VALVE
6 BLINKS	COMPRESSOR OUTPUT DELAY	3 MIN. COMP. ANTI-CYCLE TIMER

WARNING

HIGH VOLTAGE! DISCONNECT ALL POWER BEFORE SERVICING OR INSTALLING THIS UNIT. MULTIPLE POWER SOURCES MAY BE PRESENT. FAILURE TO DO SO MAY CAUSE PROPERTY DAMAGE, PERSONAL INJURY OR DEATH.

Wiring is subject to change. Always refer to the wiring diagram on the unit for the most up-to-date wiring.

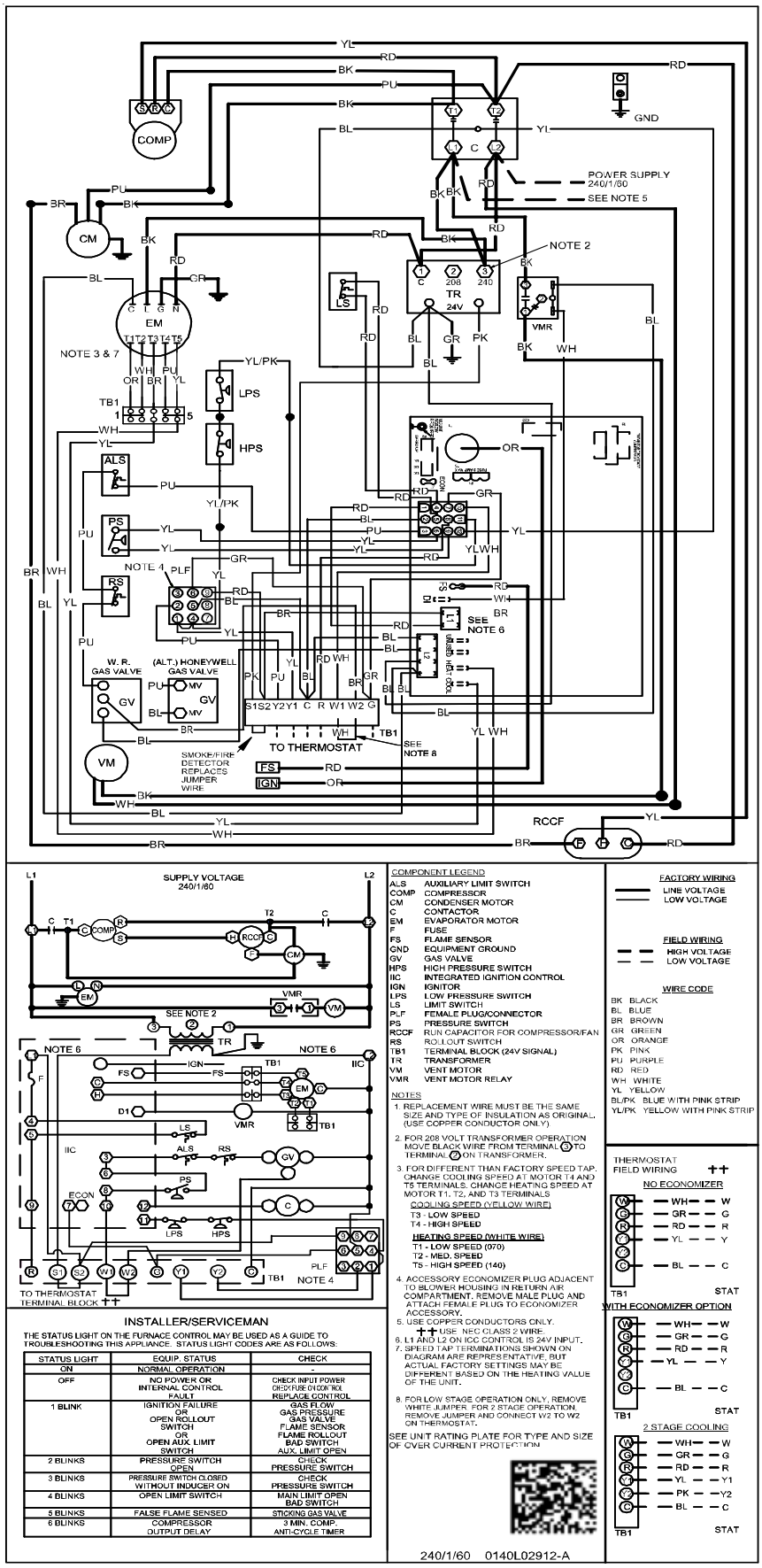

INSTALLER/SERVICEMAN

THE STATUS LIGHT ON THE FURNACE CONTROL MAY BE USED AS A GUIDE TO TROUBLESHOOTING THIS APPLIANCE. STATUS LIGHT CODES ARE AS FOLLOWS:

STATUS LIGHT	EQUIP. STATUS	CHECK
ON	NORMAL OPERATION	-
OFF	NO POWER OR INTERNAL CONTROL FAULT	CHECK INPUT POWER CHECK FUSE CHECK TRANSFORMER REPLACE CONTROL
1 BLINK	IGNITION FAILURE OR OPEN ROLLOUT SWITCH OR OPEN AUX. LIMIT SWITCH	GAS FLOW GAS PRESSURE GAS VALVE FLAME SENSOR FLAME ROLLOUT BAD SWITCH AUX. LIMIT OPEN
2 BLINKS	PRESSURE SWITCH OPEN	CHECK PRESSURE SWITCH
3 BLINKS	PRESSURE SWITCH CLOSED WITHOUT INDUCER ON	CHECK PRESSURE SWITCH
4 BLINKS	OPEN LIMIT SWITCH	MAIN LIMIT OPEN BAD SWITCH
5 BLINKS	FALSE FLAME SENSED	STICKING GAS VALVE
6 BLINKS	COMPRESSOR OUTPUT DELAY	3 MIN. COMP. ANTI-CYCLE TIMER

WARNING

HIGH VOLTAGE! DISCONNECT ALL POWER BEFORE SERVICING OR INSTALLING THIS UNIT. MULTIPLE POWER SOURCES MAY BE PRESENT. FAILURE TO DO SO MAY CAUSE PROPERTY DAMAGE, PERSONAL INJURY OR DEATH.

Wiring is subject to change. Always refer to the wiring diagram on the unit for the most up-to-date wiring.

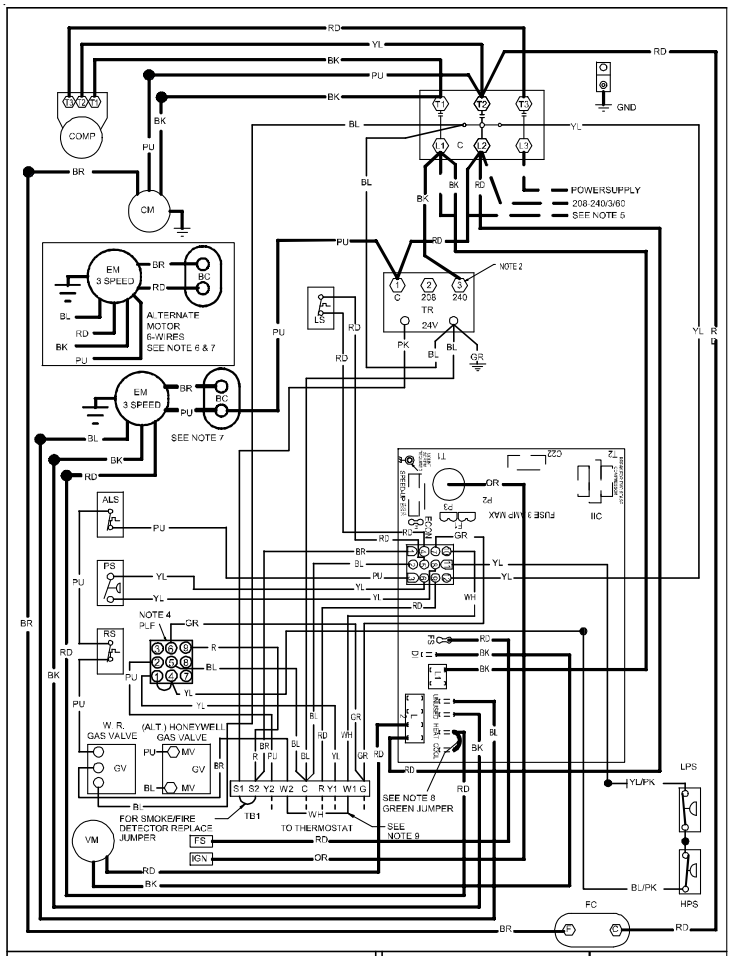

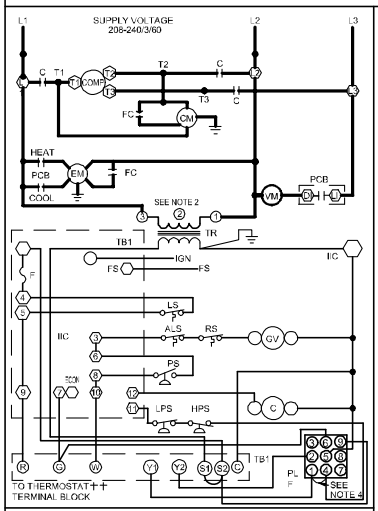

INSTALLER/SERVICEMAN

THE STATUS LIGHT ON THE FURNACE CONTROL MAY BE USED AS A GUIDE TO TROUBLESHOOTING THIS APPLIANCE. STATUS LIGHT CODES ARE AS FOLLOWS:

STATUS LIGHT	EQUIP. STATUS	CHECK
ON	NORMAL OPERATION	-
OFF	NO POWER OR INTERNAL CONTROL FAULT	CHECK INPUT POWER CHECK FUSE ON CONTROL REPLACE CONTROL
1 BLINK	IGNITION FAILURE OR OPEN ROLLOUT SWITCH OR OPEN AUX. LIMIT SWITCH	GAS FLOW GAS PRESSURE GAS VALVE FLAME SENSOR FLAME ROLLOUT BAD SWITCH AUX. LIMIT OPEN
2 BLINKS	PRESSURE SWITCH OPEN	CHECK PRESSURE SWITCH
3 BLINKS	PRESSURE SWITCH CLOSED WITHOUT INDUCER ON	CHECK PRESSURE SWITCH
4 BLINKS	OPEN LIMIT SWITCH	MAIN LIMIT OPEN BAD SWITCH
5 BLINKS	FALSE FLAME SENSED	STICKING GAS VALVE
6 BLINKS	COMPRESSOR OUTPUT DELAY	3 MIN. COMP. ANTI-CYCLE TIMER

COMPONENT LEGEND

ALS	AUXILIARY LIMIT SWITCH
COMP	COMPRESSOR
CM	CONDENSER MOTOR
C	CONTACTOR
EM	EVAPORATOR MOTOR
F	FUSE
FC	FAN CAPACITOR
FS	FLAME SENSOR
GND	EQUIPMENT GROUND
GV	GAS VALVE
HPS	HIGH PRESSURE SWITCH
IIC	INTEGRATED IGNITION CONTROL
IGN	IGNITOR
LS	LIMIT SWITCH
LPS	LOW PRESSURE SWITCH
PLF	FEMALE PLUG/CONNECTOR
PS	PRESSURE SWITCH
RS	ROLLOUT SWITCH
TB1	TERMINAL BLOCK (24V SIGNAL)
TR	TRANSFORMER
VM	VENT MOTOR
VMR	VENT MOTOR RELAY
DC	BLOWER CAPACITOR

NOTES

1. REPLACEMENT WIRE MUST BE THE SAME SIZE AND TYPE OF INSULATION AS ORIGINAL. (USE COPPER CONDUCTOR ONLY).
2. FOR 208 VOLT TRANSFORMER OPERATION MOVE BLACK WIRE FROM TERMINAL (3) TO TERMINAL (2) ON TRANSFORMER.
3. FOR DIFFERENT THAN FACTORY SPEED TAP, CHANGE COOLING SPEED AT COOL TERMINAL. CHANGE HEATING SPEED AT HEAT TERMINAL ON CONTROL BOARD
   3 SPEED MOTOR
   RD - LOW SPEED
   BL - MED. SPEED
   BK - HIGH SPEED
4. ACCESSORY ECONOMIZER PLUG ADJACENT TO BLOWER HOUSING IN RETURN AIR COMPARTMENT. REMOVE MALE PLUG AND ATTACH FEMALE PLUG TO ECONOMIZER ACCESSORY.
5. USE COPPER CONDUCTORS ONLY.
   ++ USE NEC CLASS 2 WIRE.
6. PURPLE WIRE CONNECTS TO TRANSFORMER (PIN 1).
7. SPEED TAP TERMINATIONS SHOWN ON DIAGRAM ARE REPRESENTATIVE, BUT ACTUAL FACTORY SETTING MAY BE DIFFERENT BASED ON HEATING VALUE AND CAPACITY OF UNIT.
8. TO RUN DIFFERENT SPEED FOR HEATING AND COOLING, DISCONNECT GREEN JUMPER FROM "COOL" TERMINAL AND REPLACE WITH APPROPRIATE SPEED TAP. THEN PLACE DISCONNECTED END OF JUMPER ON "UNUSED" TERMINAL LEFT OPEN BY MOVING THE SPEED TAP.
9. FOR LOW STAGE OPERATION ONLY, REMOVE WHITE JUMPER. FOR 2 STAGE OPERATION, REMOVE JUMPER AND CONNECT W2 TO W1 ON THERMOSTAT.

SEE UNIT RATING PLATE FOR TYPE AND SIZE OF OVERCURRENT PROTECTION.

208-240/3/60 0140L02899-A

FACTORY WIRING
- LINE VOLTAGE
- LOW VOLTAGE
- OPTIONAL HIGH VOLTAGE

FIELD WIRING
- HIGH VOLTAGE
- LOW VOLTAGE

WIRE CODE

BK	BLACK
BL	BLUE
BR	BROWN
GR	GREEN
OR	ORANGE
PK	PINK
PU	PURPLE
RD	RED
WH	WHITE
YL	YELLOW
BL/PK	BLUE WITH PINK STRIP
YL/PK	YELLOW WITH PINK STRIP

THERMOSTAT FIELD WIRING ++

NO ECONOMIZER

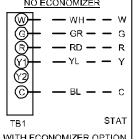

WITH ECONOMIZER OPTION

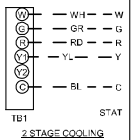

2 STAGE COOLING

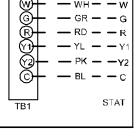

WARNING

HIGH VOLTAGE!
DISCONNECT ALL POWER BEFORE SERVICING OR INSTALLING THIS UNIT. MULTIPLE POWER SOURCES MAY BE PRESENT. FAILURE TO DO SO MAY CAUSE PROPERTY DAMAGE, PERSONAL INJURY OR DEATH.

Wiring is subject to change. Always refer to the wiring diagram on the unit for the most up-to-date wiring.

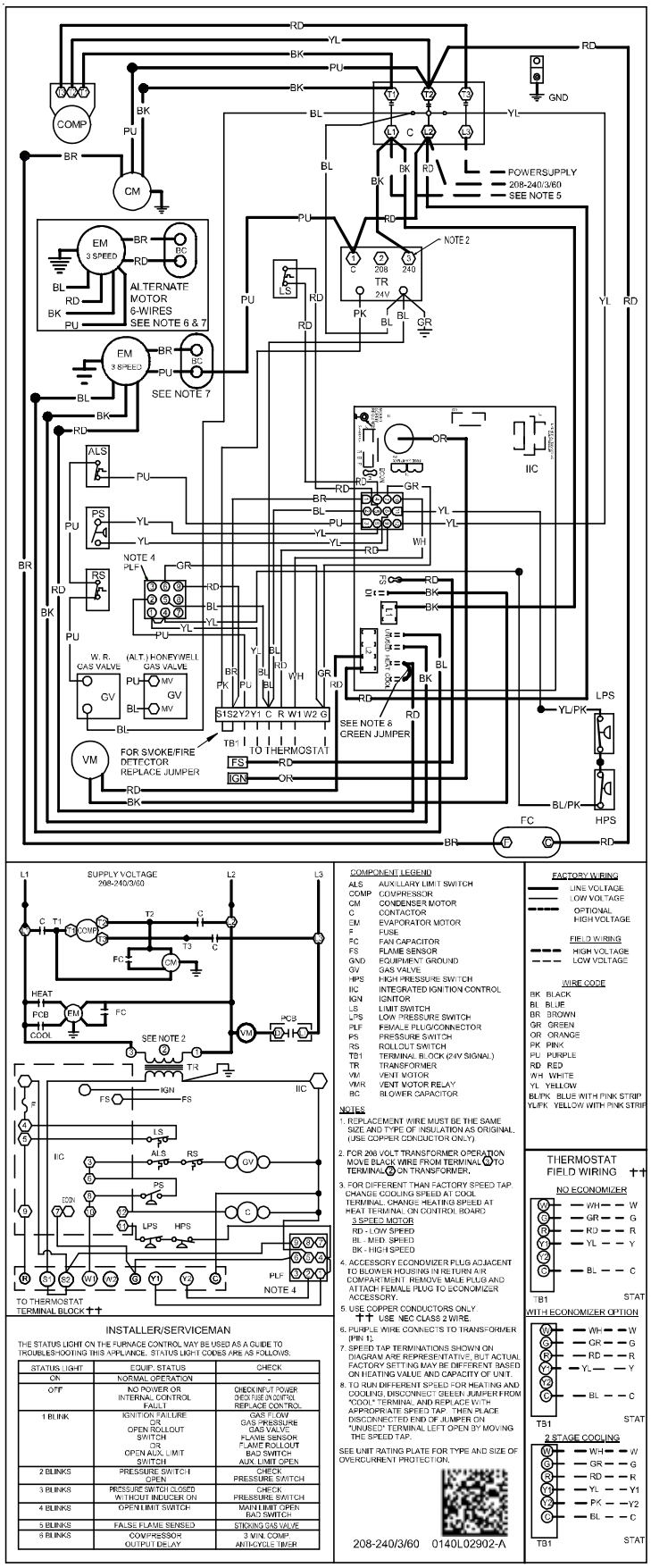

INSTALLER/SERVICEMAN

THE STATUS LIGHT ON THE FURNACE CONTROL MAY BE USED AS A GUIDE TO TROUBLESHOOTING THIS APPLIANCE. STATUS LIGHT CODES ARE AS FOLLOWS.

STATUS LIGHT	EQUIP. STATUS	CHECK
ON	NORMAL OPERATION	-
OFF	NO POWER OR INTERNAL CONTROL FAULT	CHECK INPUT POWER CHECK FUSE IN CONTROL REPLACE CONTROL
1 BLINK	IGNITION FAILURE OR OPEN ROLLOUT SWITCH OR OPEN AUX. LIMIT SWITCH	GAS FLOW GAS PRESSURE GAS VALVE FLAME SENSOR FLAME ROLLOUT BAD SWITCH AUX. LIMIT OPEN
2 BLINKS	PRESSURE SWITCH OPEN	CHECK PRESSURE SWITCH
3 BLINKS	PRESSURE SWITCH CLOSED WITHOUT INDUCER ON	CHECK PRESSURE SWITCH
4 BLINKS	OPEN LIMIT SWITCH	MAIN LIMIT OPEN BAD SWITCH
5 BLINKS	FALSE FLAME SENSED	STICKING GAS VALVE
6 BLINKS	COMPRESSOR OUTPUT DELAY	3 MIN. COMP. ANTI-CYCLE TIMER

WARNING

HIGH VOLTAGE! DISCONNECT ALL POWER BEFORE SERVICING OR INSTALLING THIS UNIT. MULTIPLE POWER SOURCES MAY BE PRESENT. FAILURE TO DO SO MAY CAUSE PROPERTY DAMAGE, PERSONAL INJURY OR DEATH.

Wiring is subject to change. Always refer to the wiring diagram on the unit for the most up-to-date wiring.

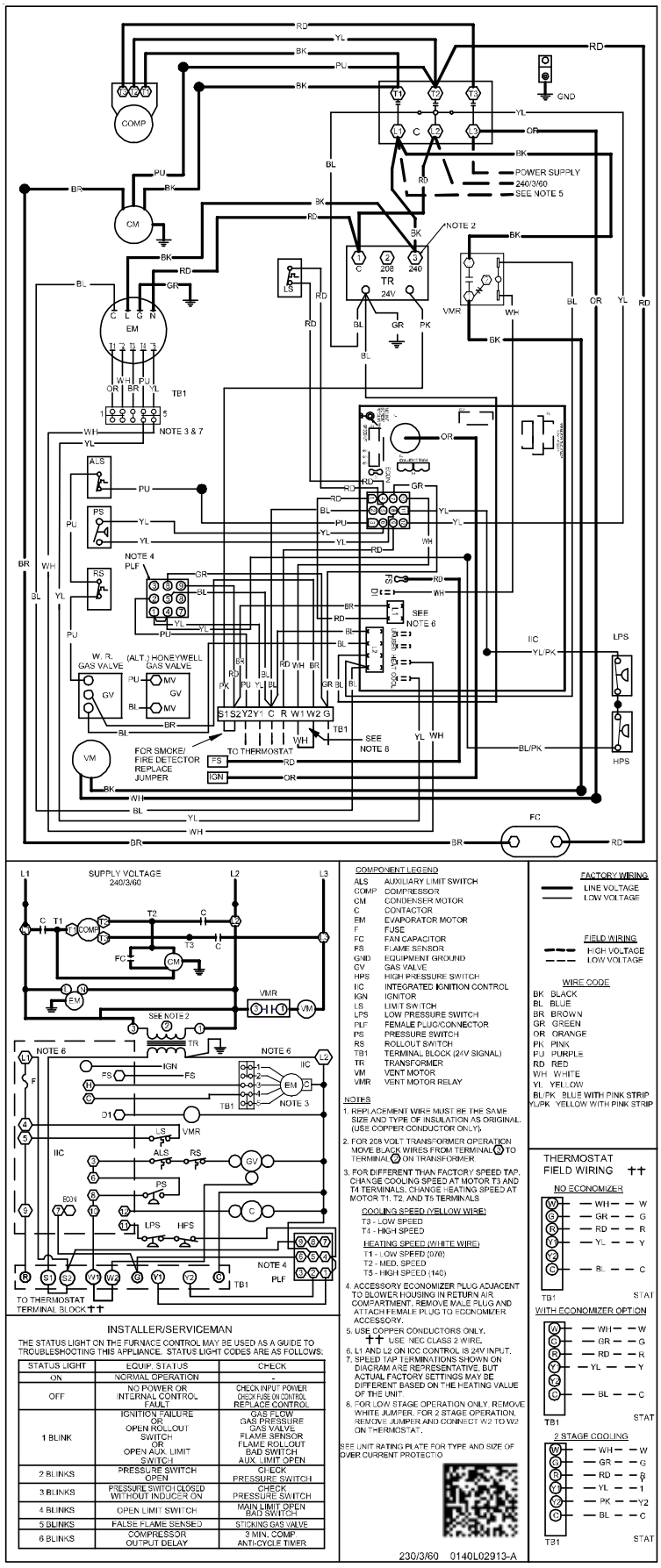

COMPONENT LEGEND

ALS	AUXILIARY LIMIT SWITCH
COMP	COMPRESSOR
CM	CONDENSER MOTOR
C	CONTACTOR
EM	EVAPORATOR MOTOR
F	FUSE
FC	FAN CAPACITOR
FS	FLAME SENSOR
GND	EQUIPMENT GROUND
GV	GAS VALVE
HPS	HIGH PRESSURE SWITCH
IIC	INTEGRATED IGNITION CONTROL
IGN	IGNITOR
LS	LIMIT SWITCH
LPS	LOW PRESSURE SWITCH
PLF	FEMALE PLUG/CONNECTOR
PS	PRESSURE SWITCH
RS	ROLLOUT SWITCH
TB1	TERMINAL BLOCK (24V SIGNAL)
TR	TRANSFORMER
VM	VENT MOTOR
VMR	VENT MOTOR RELAY

NOTES

1. REPLACEMENT WIRE MUST BE THE SAME SIZE AND TYPE OF INSULATION AS ORIGINAL. (USE COPPER CONDUCTOR ONLY).
2. FOR 208 VOLT TRANSFORMER OPERATION MOVE BLACK WIRES FROM TERMINAL (2) TO TERMINAL (3) ON TRANSFORMER.
3. FOR DIFFERENT THAN FACTORY SPEED TAP, CHANGE COOLING SPEED AT MOTOR T3 AND T4 TERMINALS. CHANGE HEATING SPEED AT MOTOR T1, T2, AND T5 TERMINALS

   COOLING SPEED (YELLOW WIRE)
   T3 - LOW SPEED
   T4 - HIGH SPEED

   HEATING SPEED (WHITE WIRE)
   T1 - LOW SPEED (70%)
   T2 - MED. SPEED
   T5 - HIGH SPEED (140)
4. ACCESSORY ECONOMIZER PLUG ADJACENT TO BLOWER HOUSING IN RETURN AIR COMPARTMENT. REMOVE MALE PLUG AND ATTACH FEMALE PLUG TO ECONOMIZER ACCESSORY.
5. USE COPPER CONDUCTORS ONLY.
   †† USE NEC CLASS 2 WIRE.
6. L1 AND L2 ON ICC CONTROL IS 24V INPUT.
7. SPEED TAP TERMINATIONS SHOWN ON DIAGRAM ARE REPRESENTATIVE, BUT ACTUAL FACTORY SETTINGS MAY BE DIFFERENT BASED ON THE HEATING VALUE OF THE UNIT.
8. FOR LOW STAGE OPERATION ONLY, REMOVE WHITE JUMPER. FOR 2 STAGE OPERATION, REMOVE JUMPER AND CONNECT W2 TO W2 ON THERMOSTAT.

SEE UNIT RATING PLATE FOR TYPE AND SIZE OF OVER CURRENT PROTECTIO

230/3/60 0140L02913-A

FACTORY WIRING
LINE VOLTAGE
LOW VOLTAGE

FIELD WIRING
HIGH VOLTAGE
LOW VOLTAGE

WIRE CODE

BK	BLACK
BL	BLUE
BR	BROWN
GR	GREEN
OR	ORANGE
PK	PINK
PU	PURPLE
RD	RED
WH	WHITE
YL	YELLOW
BL/PK	BLUE WITH PINK STRIP
YL/PK	YELLOW WITH PINK STRIP

THERMOSTAT FIELD WIRING ††

INSTALLER/SERVICEMAN

THE STATUS LIGHT ON THE FURNACE CONTROL MAY BE USED AS A GUIDE TO TROUBLESHOOTING THIS APPLIANCE. STATUS LIGHT CODES ARE AS FOLLOWS:

STATUS LIGHT	EQUIP. STATUS	CHECK
ON	NORMAL OPERATION	-
OFF	NO POWER OR INTERNAL CONTROL FAULT	CHECK INPUT POWER CHECK FUSE ON CONTROL REPLACE CONTROL
1 BLINK	IGNITION FAILURE OR OPEN ROLLOUT SWITCH OR OPEN AUX. LIMIT SWITCH	GAS FLOW GAS PRESSURE GAS VALVE FLAME SENSOR FLAME ROLLOUT BAD SWITCH AUX. LIMIT OPEN
2 BLINKS	PRESSURE SWITCH OPEN	CHECK PRESSURE SWITCH
3 BLINKS	PRESSURE SWITCH CLOSED WITHOUT INDUCER ON	CHECK PRESSURE SWITCH
4 BLINKS	OPEN LIMIT SWITCH	MAIN LIMIT OPEN BAD SWITCH
5 BLINKS	FALSE FLAME SENSED	STICKING GAS VALVE
6 BLINKS	COMPRESSOR OUTPUT DELAY	3 MIN. COMP ANTI-CYCLE TIMER

WARNING

HIGH VOLTAGE!
DISCONNECT ALL POWER BEFORE SERVICING OR INSTALLING THIS UNIT. MULTIPLE POWER SOURCES MAY BE PRESENT. FAILURE TO DO SO MAY CAUSE PROPERTY DAMAGE, PERSONAL INJURY OR DEATH.

Wiring is subject to change. Always refer to the wiring diagram on the unit for the most up-to-date wiring.

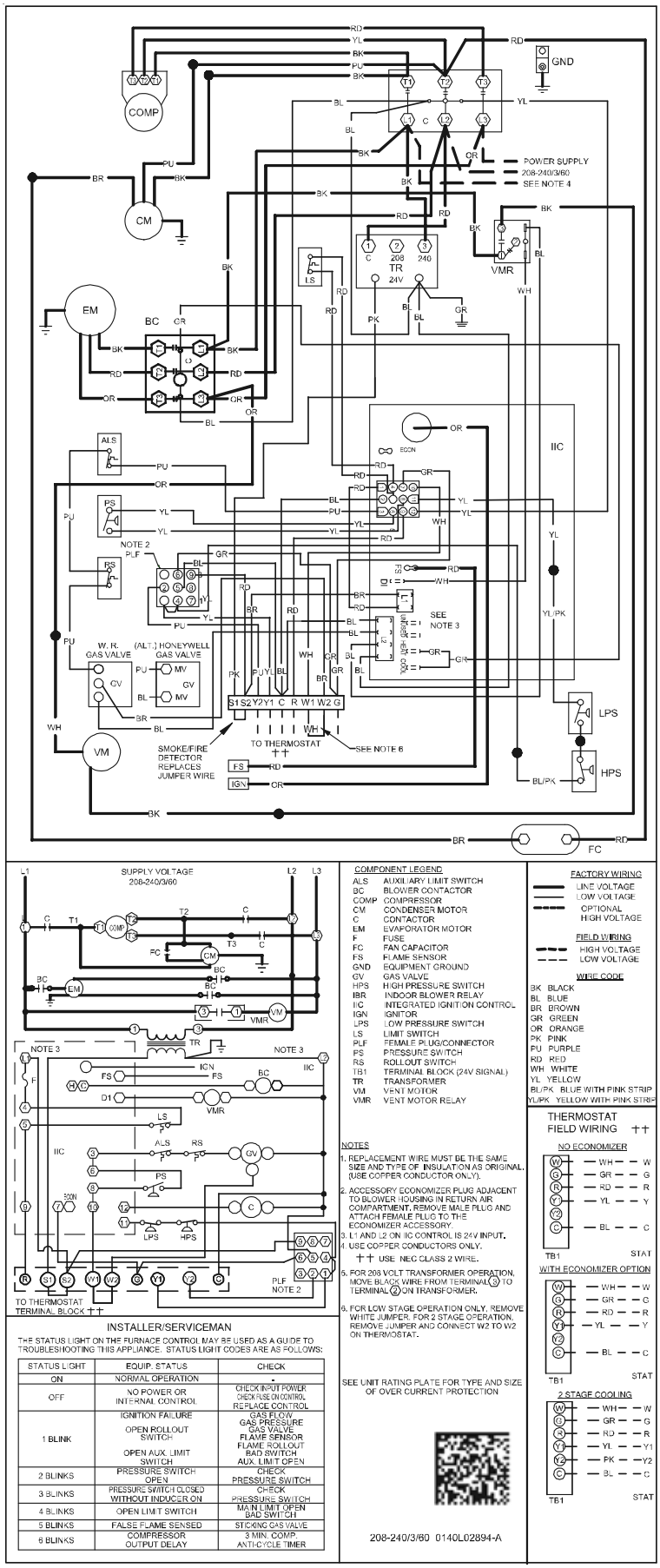

INSTALLER/SERVICEMAN

THE STATUS LIGHT ON THE FURNACE CONTROL MAY BE USED AS A GUIDE TO TROUBLESHOOTING THIS APPLIANCE. STATUS LIGHT CODES ARE AS FOLLOWS:

STATUS LIGHT	EQUIP. STATUS	CHECK
ON	NORMAL OPERATION	
OFF	NO POWER OR INTERNAL CONTROL	CHECK INPUT POWER CHECK FUSE ON CONTROL REPLACE CONTROL
1 BLINK	IGNITION FAILURE OPEN ROLLOUT SWITCH OPEN AUX. LIMIT SWITCH	GAS FLOW GAS PRESSURE GAS VALVE FLAME SENSOR FLAME ROLLOUT BAD SWITCH AUX. LIMIT OPEN
2 BLINKS	PRESSURE SWITCH OPEN	CHECK PRESSURE SWITCH
3 BLINKS	PRESSURE SWITCH CLOSED WITHOUT INDUCER ON	CHECK PRESSURE SWITCH
4 BLINKS	OPEN LIMIT SWITCH	MAIN LIMIT OPEN BAD SWITCH
5 BLINKS	FALSE FLAME SENSED	STICKING GAS VALVE
6 BLINKS	COMPRESSOR OUTPUT DELAY	3 MIN. COMP. ANTI-CYCLE TIMER

WARNING

HIGH VOLTAGE!
DISCONNECT ALL POWER BEFORE SERVICING OR INSTALLING THIS UNIT. MULTIPLE POWER SOURCES MAY BE PRESENT. FAILURE TO DO SO MAY CAUSE PROPERTY DAMAGE, PERSONAL INJURY OR DEATH.

Wiring is subject to change. Always refer to the wiring diagram on the unit for the most up-to-date wiring.

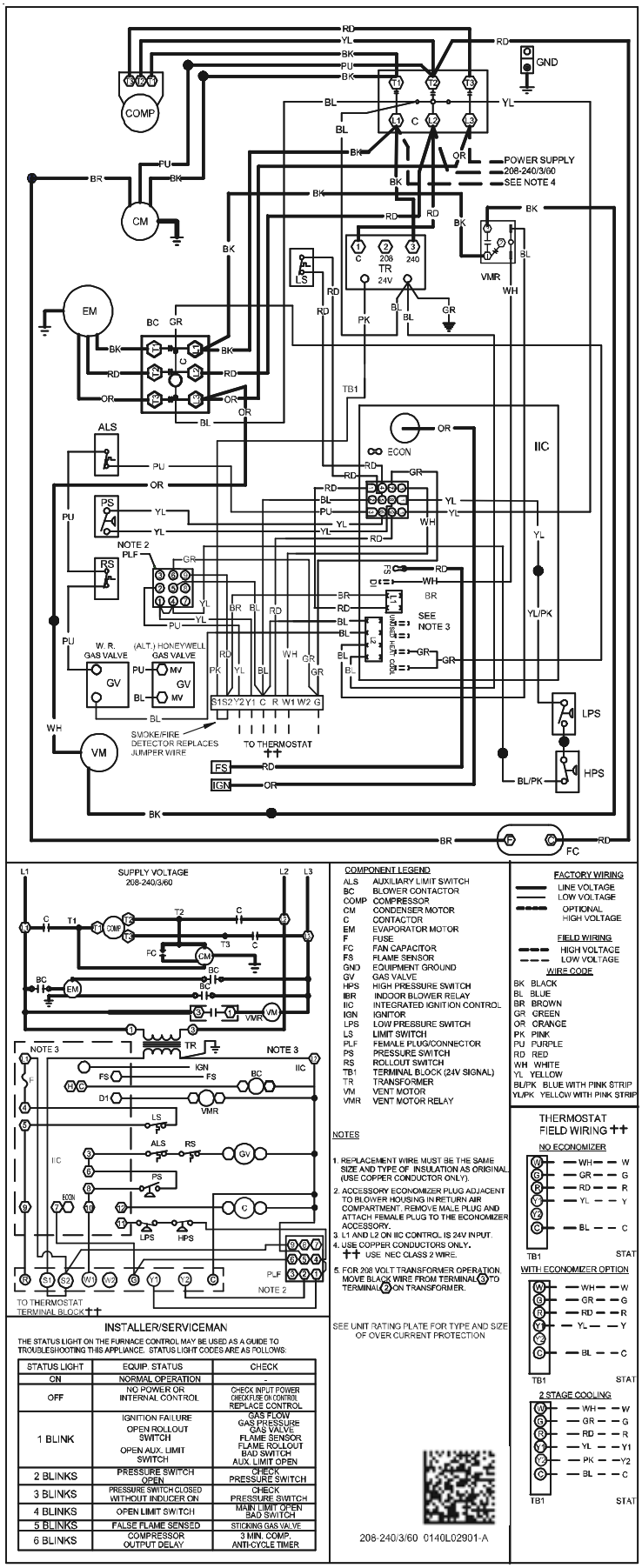

INSTALLER/SERVICEMAN

THE STATUS LIGHT ON THE FURNACE CONTROL MAY BE USED AS A GUIDE TO TROUBLESHOOTING THIS APPLIANCE. STATUS LIGHT CODES ARE AS FOLLOWS:

STATUS LIGHT	EQUIP. STATUS	CHECK
ON	NORMAL OPERATION	-
OFF	NO POWER OR INTERNAL CONTROL	CHECK INPUT POWER CHECK FUSE ON CONTROL REPLACE CONTROL
1 BLINK	IGNITION FAILURE OPEN ROLLOUT SWITCH OPEN AUX. LIMIT SWITCH	GAS FLOW GAS PRESSURE GAS VALVE FLAME SENSOR FLAME ROLLOUT BAD SWITCH AUX. LIMIT OPEN
2 BLINKS	PRESSURE SWITCH OPEN	CHECK PRESSURE SWITCH
3 BLINKS	PRESSURE SWITCH CLOSED WITHOUT INDUCER ON	CHECK PRESSURE SWITCH
4 BLINKS	OPEN LIMIT SWITCH	MAIN LIMIT OPEN BAD SWITCH
5 BLINKS	FALSE FLAME SENSED	STICKING GAS VALVE
6 BLINKS	COMPRESSOR OUTPUT DELAY	3 MIN. COMP. ANTI-CYCLE TIMER

WARNING

HIGH VOLTAGE! DISCONNECT ALL POWER BEFORE SERVICING OR INSTALLING THIS UNIT. MULTIPLE POWER SOURCES MAY BE PRESENT. FAILURE TO DO SO MAY CAUSE PROPERTY DAMAGE, PERSONAL INJURY OR DEATH.

Wiring is subject to change. Always refer to the wiring diagram on the unit for the most up-to-date wiring.

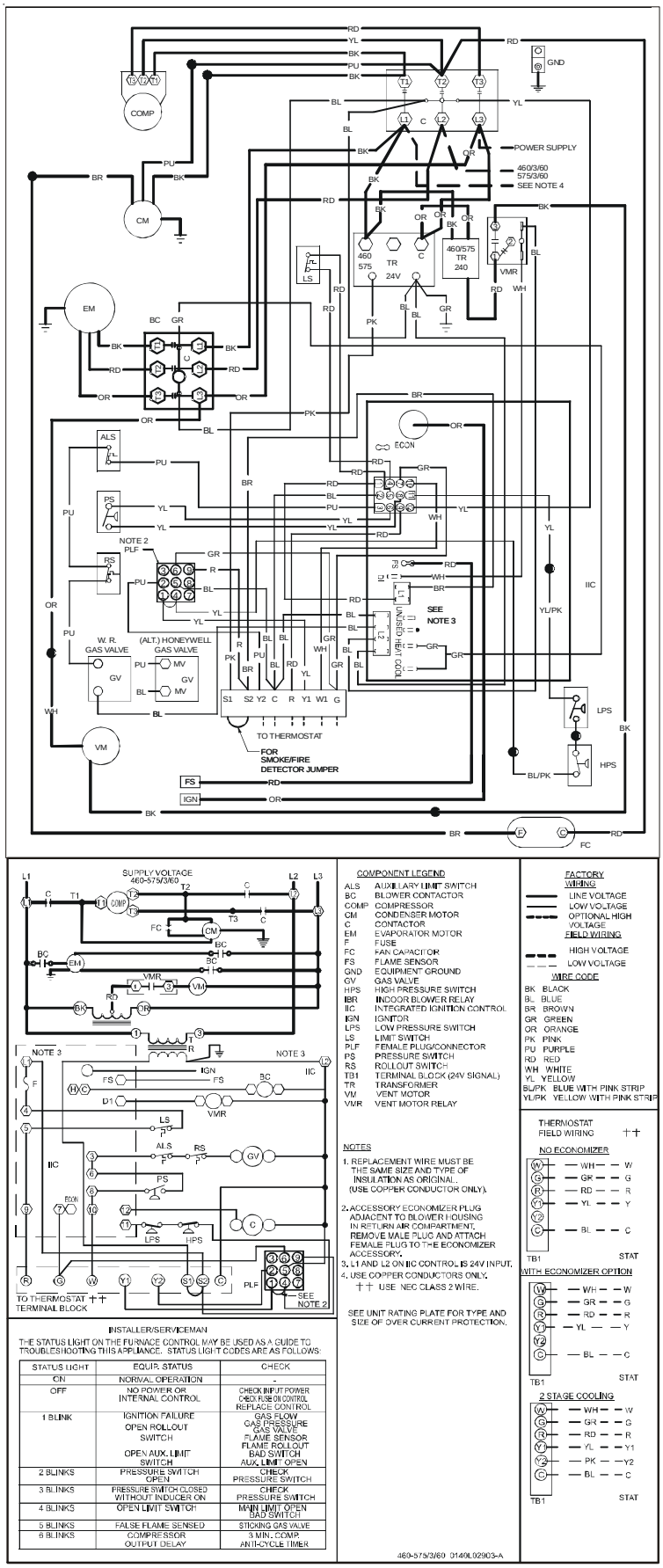

COMPONENT LEGEND

ALS	AUXILIARY LIMIT SWITCH
BC	BLOWER CONTACTOR
COMP	COMPRESSOR
CM	CONDENSER MOTOR
C	CONTACTOR
EM	EVAPORATOR MOTOR
F	FUSE
FC	FAN CAPACITOR
FS	FLAME SENSOR
GND	EQUIPMENT GROUND
GV	GAS VALVE
HPS	HIGH PRESSURE SWITCH
IBR	INDOOR BLOWER RELAY
IIC	INTEGRATED IGNITION CONTROL
IGN	IGNITOR
LPS	LOW PRESSURE SWITCH
LS	LIMIT SWITCH
PLF	FEMALE PLUG/CONNECTOR
PS	PRESSURE SWITCH
RS	ROLLOUT SWITCH
TB1	TERMINAL BLOCK (24V SIGNAL)
TR	TRANSFORMER
VM	VENT MOTOR
VMR	VENT MOTOR RELAY

NOTES

1. REPLACEMENT WIRE MUST BE THE SAME SIZE AND TYPE OF INSULATION AS ORIGINAL. (USE COPPER CONDUCTOR ONLY).
2. ACCESSORY ECONOMIZER PLUG ADJACENT TO BLOWER HOUSING IN RETURN AIR COMPARTMENT. REMOVE MALE PLUG AND ATTACH FEMALE PLUG TO THE ECONOMIZER ACCESSORY.
3. L1 AND L2 ON IIC CONTROL IS 24V INPUT.
4. USE COPPER CONDUCTORS ONLY.

†† USE NEC CLASS 2 WIRE.

SEE UNIT RATING PLATE FOR TYPE AND SIZE OF OVER CURRENT PROTECTION.

FACTORY WIRING
- LINE VOLTAGE
- LOW VOLTAGE
- OPTIONAL HIGH VOLTAGE

FIELD WIRING
- HIGH VOLTAGE
- LOW VOLTAGE

WIRE CODE

BK	BLACK
BL	BLUE
BR	BROWN
GR	GREEN
OR	ORANGE
PK	PINK
PU	PURPLE
RD	RED
WH	WHITE
YL	YELLOW
BL/PK	BLUE WITH PINK STRIP
YL/PK	YELLOW WITH PINK STRIP

THERMOSTAT FIELD WIRING ††

NO ECONOMIZER

W — WH — W
G — GR — G
R — RD — R
Y1 — YL — Y
Y2
C — BL — C
TB1 STAT

WITH ECONOMIZER OPTION

W — WH — W
G — GR — G
R — RD — R
Y1 — YL — Y
Y2
C — BL — C
TB1 STAT

2 STAGE COOLING

W — WH — W
G — GR — G
R — RD — R
Y1 — YL — Y1
Y2 — PK — Y2
C — BL — C
TB1 STAT

INSTALLER/SERVICEMAN

THE STATUS LIGHT ON THE FURNACE CONTROL MAY BE USED AS A GUIDE TO TROUBLESHOOTING THIS APPLIANCE. STATUS LIGHT CODES ARE AS FOLLOWS:

STATUS LIGHT	EQUIP. STATUS	CHECK
ON	NORMAL OPERATION	-
OFF	NO POWER OR INTERNAL CONTROL	CHECK INPUT POWER CHECK FUSE ON CONTROL REPLACE CONTROL
1 BLINK	IGNITION FAILURE OPEN ROLLOUT SWITCH OPEN AUX. LIMIT SWITCH	GAS FLOW GAS PRESSURE GAS VALVE FLAME SENSOR FLAME ROLLOUT BAD SWITCH AUX. LIMIT OPEN
2 BLINKS	PRESSURE SWITCH OPEN	CHECK PRESSURE SWITCH
3 BLINKS	PRESSURE SWITCH CLOSED WITHOUT INDUCER ON	CHECK PRESSURE SWITCH
4 BLINKS	OPEN LIMIT SWITCH	MAIN LIMIT OPEN BAD SWITCH
5 BLINKS	FALSE FLAME SENSED	STICKING GAS VALVE
6 BLINKS	COMPRESSOR OUTPUT DELAY	3 MIN. COMP. ANTI-CYCLE TIMER

WARNING

HIGH VOLTAGE! DISCONNECT ALL POWER BEFORE SERVICING OR INSTALLING THIS UNIT. MULTIPLE POWER SOURCES MAY BE PRESENT. FAILURE TO DO SO MAY CAUSE PROPERTY DAMAGE, PERSONAL INJURY OR DEATH.

Wiring is subject to change. Always refer to the wiring diagram on the unit for the most up-to-date wiring.

UNIT WIRING DIAGRAMS DCG036-072XXX[4,7]B***A*

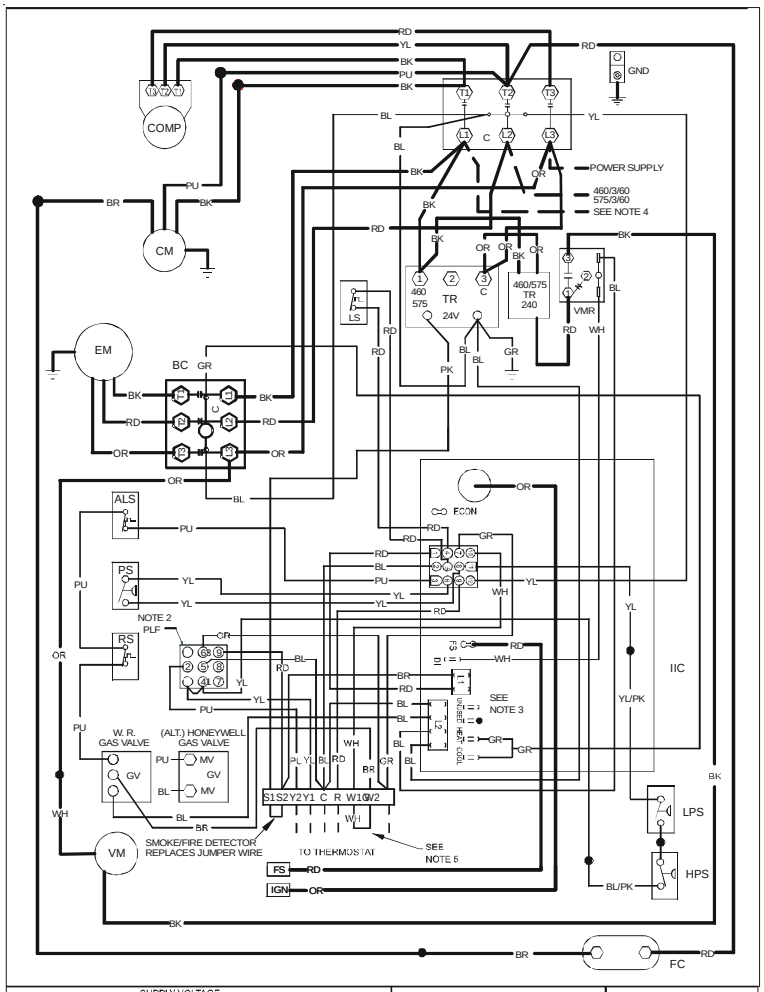

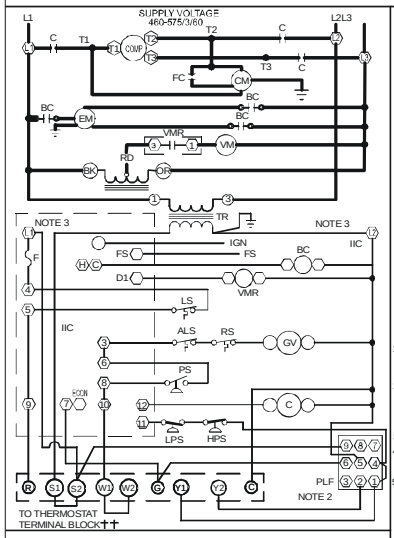

COMPONENT LEGEND

ALS	AUXILLARY LIMIT SWITCH
BC	BLOWER CONTACTOR
COMP	COMPRESSOR
CM	CONDENSER MOTOR
C	CONTACTOR
EM	EVAPORATOR MOTOR
F	FUSE
FC	FAN CAPACITOR
FS	FLAME SENSOR
GND	EQUIPMENT GROUND
GV	GAS VALVE
HPS	HIGH PRESSURE SWITCH
IBR	INDOOR BLOWER RELAY
IIC	INTEGRATED IGNITION CONTROL
IGN	IGNITOR
LPS	LOW PRESSURE SWITCH
LS	LIMIT SWITCH
PLF	FEMALE PLUG/CONNECTOR
PS	PRESSURE SWITCH
RS	ROLLOUT SWITCH
TB1	TERMINAL BLOCK (24V SIGNAL)
TR	TRANSFORMER
VM	VENT MOTOR
VMR	VENT MOTOR RELAY

NOTES

1. REPLACEMENT WIRE MUST BE THE SAME SIZE AND TYPE OF INSULATION AS ORIGINAL (USE COPPER CONDUCTOR ONLY).
2. ACCESSORY ECONOMIZER PLUG ADJACENT TO BLOWER HOUSING IN RETURN AIR COMPARTMENT. REMOVE MALE PLUG AND ATTACH FEMALE PLUG TO THE ECONOMIZER ACCESSORY.
3. L1 AND L2 ON IIC CONTROL IS 24V INPUT.
4. USE COPPER CONDUCTORS ONLY.
   †† USE NEC CLASS 2 WIRE.
5. FOR LOW STAGE OPERATION ONLY, REMOVE WHITE JUMPER. FOR 2 STAGE OPERATION, REMOVE JUMPER AND CONNECT W2 TO W2 ON THERMOSTAT.

SEE UNIT RATING PLATE FOR TYPE AND SIZE OF OVER CURRENT PROTECTION.

460-575/3/60 0140L02895-A

FACTORY WIRING
- LINE VOLTAGE
- LOW VOLTAGE
- OPTIONAL HIGH VOLTAGE

FIELD WIRING
- HIGH VOLTAGE
- LOW VOLTAGE

WIRE CODE

BK	BLACK
BL	BLUE
BR	BROWN
GR	GREEN
OR	ORANGE
PK	PINK
PU	PURPLE
RD	RED
WH	WHITE
YL	YELLOW
BL/PK	BLUE WITH PINK STRIP
YL/PK	YELLOW WITH PINK STRIP

THERMOSTAT FIELD WIRING ††

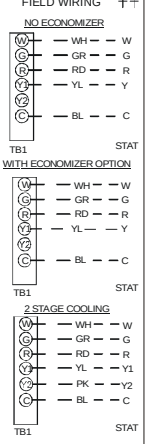

INSTALLER/SERVICEMAN

THE STATUS LIGHT ON THE FURNACE CONTROL MAY BE USED AS A GUIDE TO TROUBLESHOOTING THIS APPLIANCE. STATUS LIGHT CODES ARE AS FOLLOWS:

STATUS LIGHT	EQUIP. STATUS	CHECK
ON	NORMAL OPERATION	-
OFF	NO POWER OR INTERNAL CONTROL	CHECK INPUT POWER CHECK FUSE ON CONTROL REPLACE CONTROL
1 BLINK	IGNITION FAILURE OPEN ROLLOUT SWITCH OPEN AUX. LIMIT SWITCH	GAS FLOW GAS PRESSURE GAS VALVE FLAME SENSOR FLAME ROLLOUT BAD SWITCH AUX. LIMIT OPEN
2 BLINKS	PRESSURE SWITCH OPEN	CHECK PRESSURE SWITCH
3 BLINKS	PRESSURE SWITCH CLOSED WITHOUT INDUCER ON	CHECK PRESSURE SWITCH
4 BLINKS	OPEN LIMIT SWITCH FALSE FLAME	MAIN LIMIT OPEN BAD SWITCH
5 BLINKS	SENSED	STICKING GAS VALVE
6 BLINKS	COMPRESSOR OUTPUT DELAY	3 MIN. COMP. ANTICYCLE TIMER

WARNING

HIGH VOLTAGE!
DISCONNECT ALL POWER BEFORE SERVICING OR INSTALLING THIS UNIT. MULTIPLE POWER SOURCES MAY BE PRESENT. FAILURE TO DO SO MAY CAUSE PROPERTY DAMAGE, PERSONAL INJURY OR DEATH.

Wiring is subject to change. Always refer to the wiring diagram on the unit for the most up-to-date wiring.

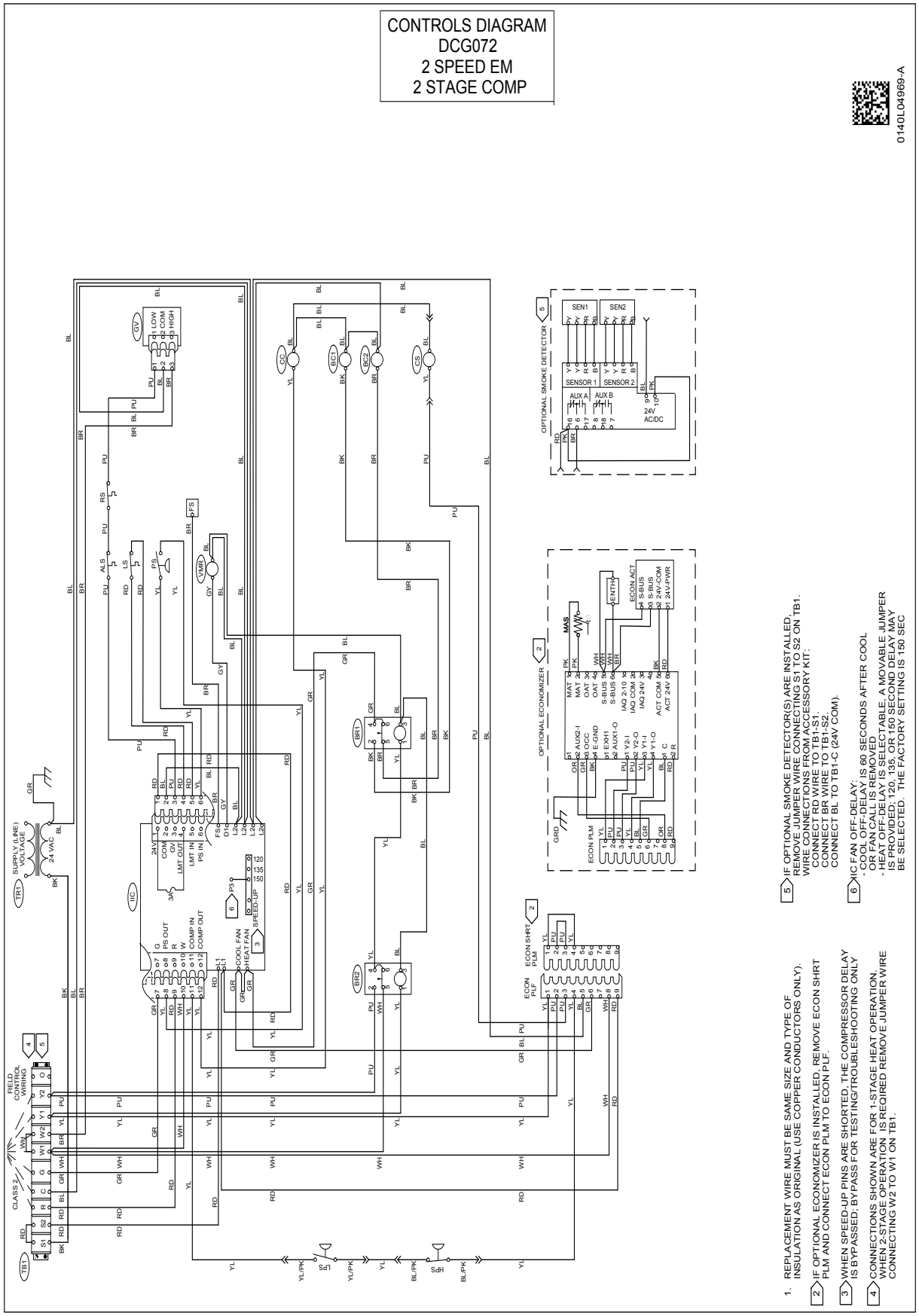

WARNING

HIGH VOLTAGE!
DISCONNECT ALL POWER BEFORE SERVICING OR INSTALLING THIS UNIT. MULTIPLE POWER SOURCES MAY BE PRESENT. FAILURE TO DO SO MAY CAUSE PROPERTY DAMAGE, PERSONAL INJURY OR DEATH.

Wiring is subject to change. Always refer to the wiring diagram on the unit for the most up-to-date wiring.

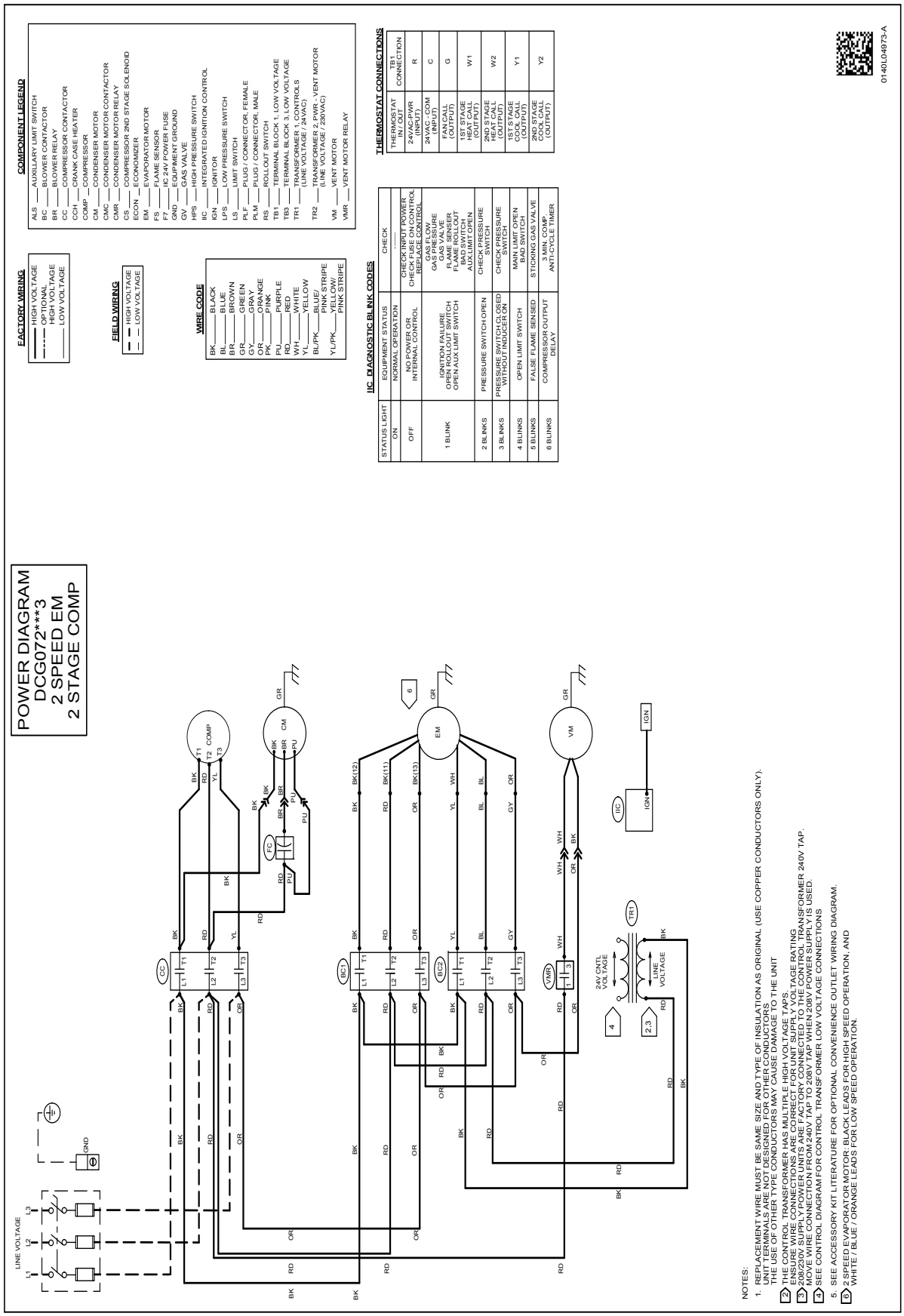

Wiring is subject to change. Always refer to the wiring diagram on the unit for the most up-to-date wiring.

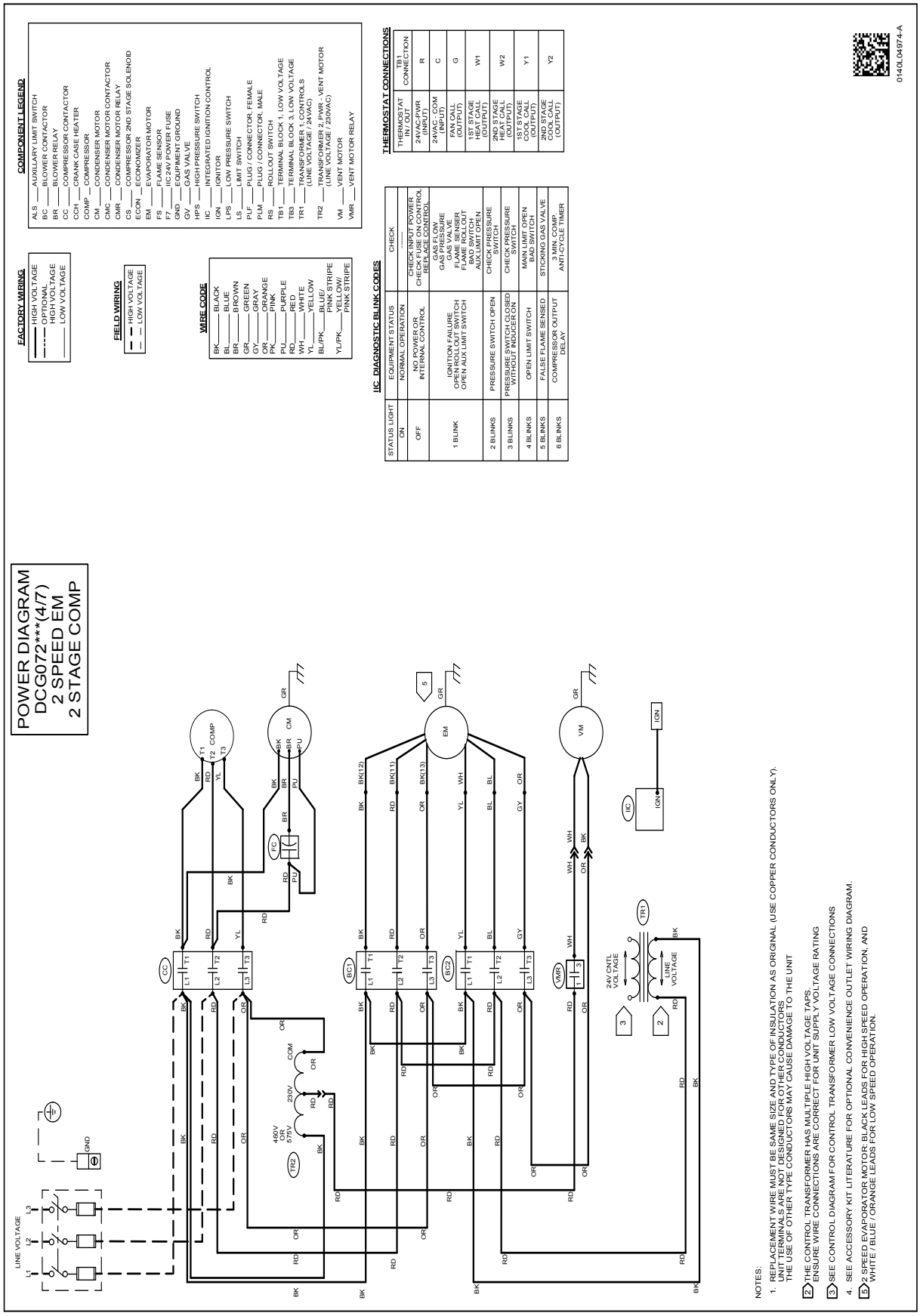

NOTES:

1. REPLACEMENT WIRE MUST BE SAME SIZE AND TYPE OF INSULATION AS ORIGINAL (USE COPPER CONDUCTORS ONLY). UNIT TERMINALS ARE NOT DESIGNED FOR OTHER CONDUCTORS. THE USE OF OTHER TYPE CONDUCTORS MAY CAUSE DAMAGE TO THE UNIT
2. THE CONTROL TRANSFORMER HAS MULTIPLE HIGH VOLTAGE TAPS. ENSURE WIRE CONNECTIONS ARE CORRECT FOR UNIT SUPPLY VOLTAGE RATING
3. SEE CONTROL DIAGRAM FOR CONTROL TRANSFORMER LOW VOLTAGE CONNECTIONS
4. SEE ACCESSORY KIT LITERATURE FOR OPTIONAL CONVENIENCE OUTLET WIRING DIAGRAM.
5. 2 SPEED EVAPORATOR MOTOR: BLACK LEADS FOR HIGH SPEED OPERATION, AND WHITE / BLUE / ORANGE LEADS FOR LOW SPEED OPERATION.

WARNING

HIGH VOLTAGE!
DISCONNECT ALL POWER BEFORE SERVICING OR INSTALLING THIS UNIT. MULTIPLE POWER SOURCES MAY BE PRESENT. FAILURE TO DO SO MAY CAUSE PROPERTY DAMAGE, PERSONAL INJURY OR DEATH.

Wiring is subject to change. Always refer to the wiring diagram on the unit for the most up-to-date wiring.

DCH COMMERCIAL
3-6 Ton Packaged Heat Pump Unit
WIRING DIAGRAMS

For units with DDC control see manual RSD6412018* for wiring diagrams

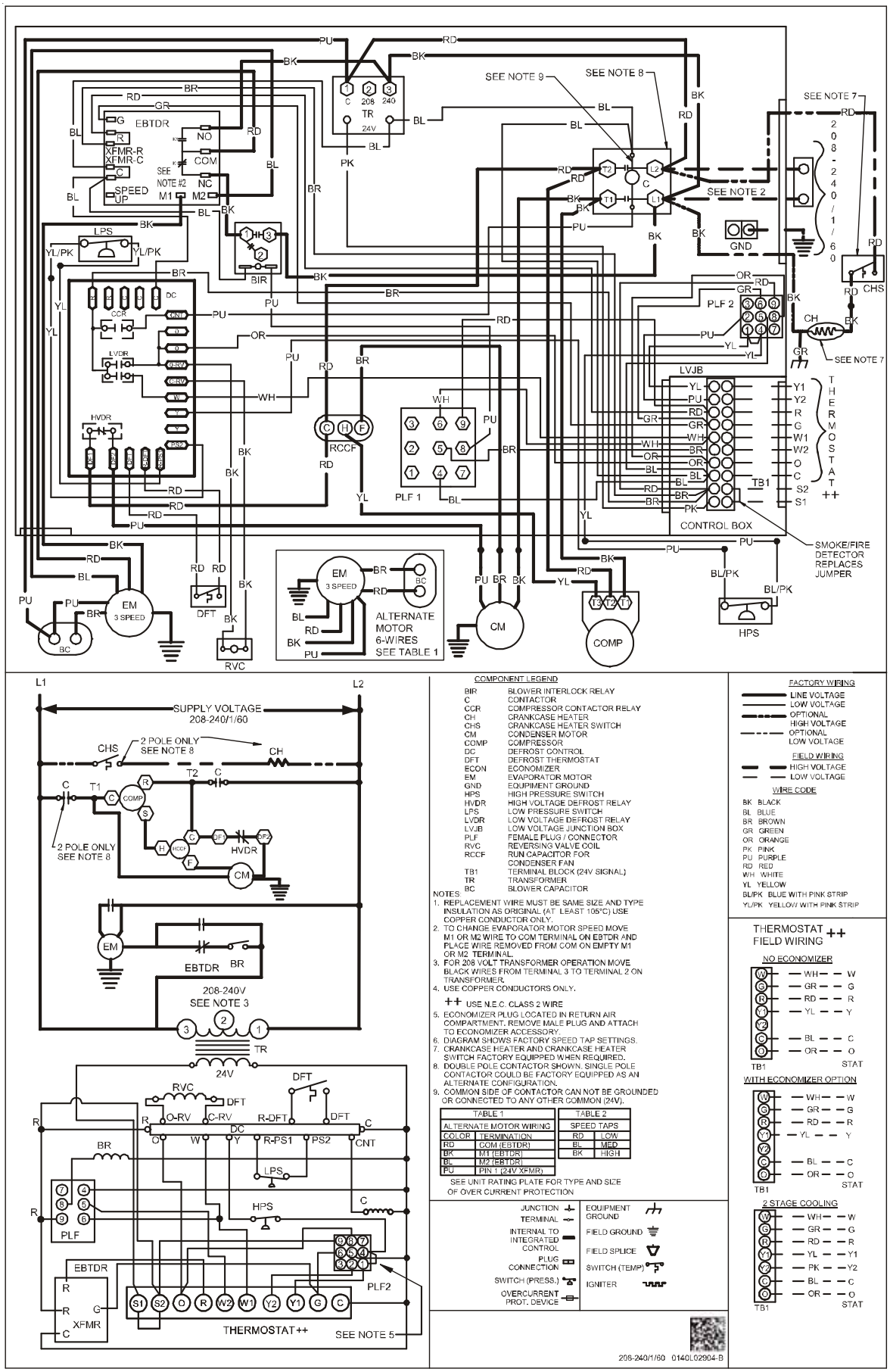

WARNING

HIGH VOLTAGE! DISCONNECT ALL POWER BEFORE SERVICING OR INSTALLING THIS UNIT. MULTIPLE POWER SOURCES MAY BE PRESENT. FAILURE TO DO SO MAY CAUSE PROPERTY DAMAGE, PERSONAL INJURY OR DEATH.

Wiring is subject to change. Always refer to the wiring diagram on the unit for the most up-to-date wiring.

UNIT WIRING DIAGRAMS DCH060XXX1D***A*

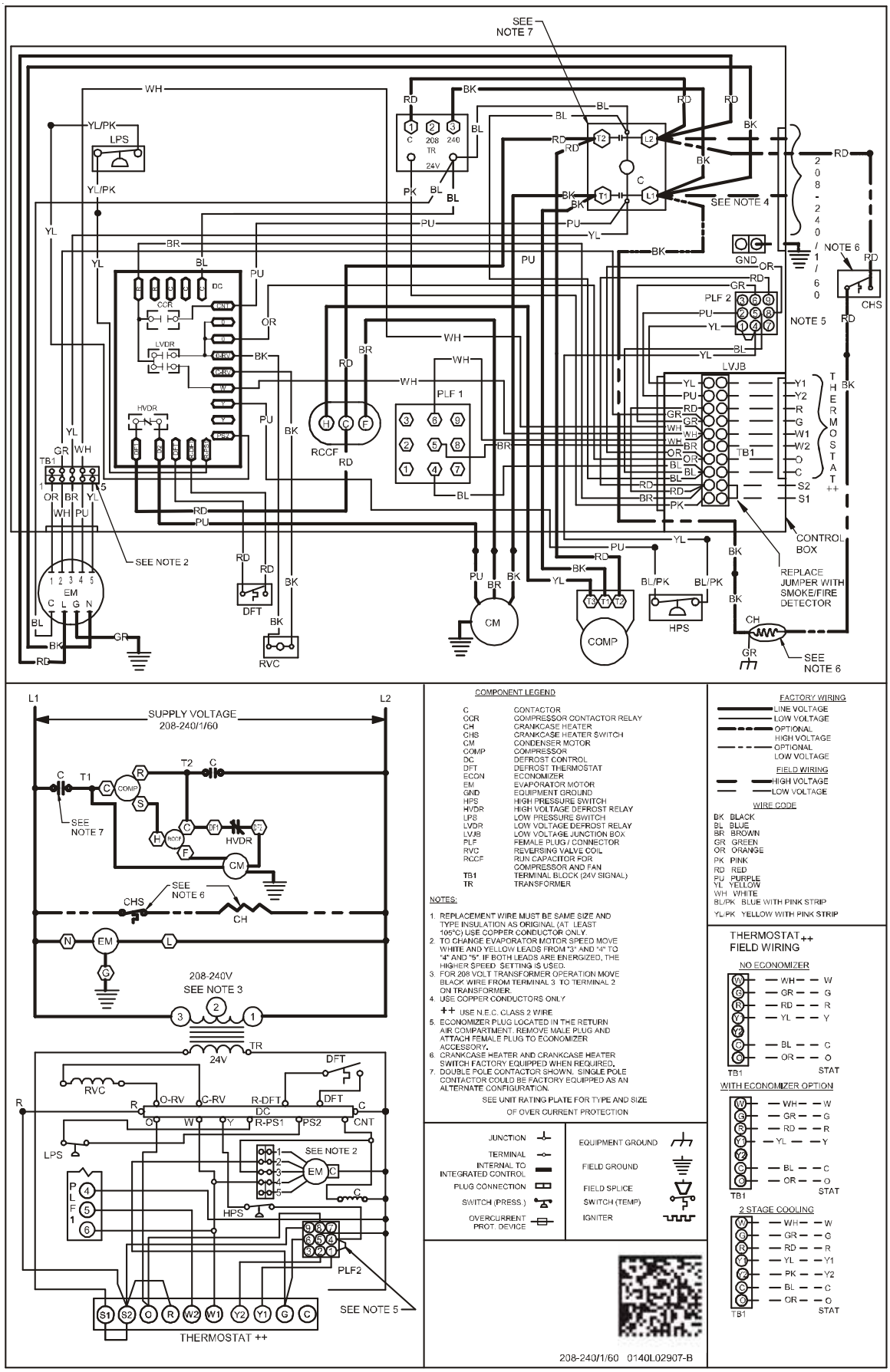

COMPONENT LEGEND

C	CONTACTOR
CCR	COMPRESSOR CONTACTOR RELAY
CH	CRANKCASE HEATER
CHS	CRANKCASE HEATER SWITCH
CM	CONDENSER MOTOR
COMP	COMPRESSOR
DC	DEFROST CONTROL
DFT	DEFROST THERMOSTAT
ECON	ECONOMIZER
EM	EVAPORATOR MOTOR
GND	EQUIPMENT GROUND
HPS	HIGH PRESSURE SWITCH
HVDR	HIGH VOLTAGE DEFROST RELAY
LPS	LOW PRESSURE SWITCH
LVDR	LOW VOLTAGE DEFROST RELAY
LVJB	LOW VOLTAGE JUNCTION BOX
PLF	FEMALE PLUG / CONNECTOR
RVC	REVERSING VALVE COIL
RCCF	RUN CAPACITOR FOR COMPRESSOR AND FAN
TB1	TERMINAL BLOCK (24V SIGNAL)
TR	TRANSFORMER

NOTES:

1. REPLACEMENT WIRE MUST BE SAME SIZE AND TYPE INSULATION AS ORIGINAL (AT LEAST 105°C) USE COPPER CONDUCTOR ONLY.
2. TO CHANGE EVAPORATOR MOTOR SPEED MOVE WHITE AND YELLOW LEADS FROM "3" AND "4" TO "4" AND "5" IF BOTH LEADS ARE ENERGIZED, THE HIGHER SPEED SETTING IS USED.
3. FOR 208 VOLT TRANSFORMER OPERATION MOVE BLACK WIRE FROM TERMINAL 3 TO TERMINAL 2 ON TRANSFORMER.
4. USE COPPER CONDUCTORS ONLY

++ USE N.E.C. CLASS 2 WIRE

5. ECONOMIZER PLUG LOCATED IN THE RETURN AIR COMPARTMENT. REMOVE MALE PLUG AND ATTACH FEMALE PLUG TO ECONOMIZER ACCESSORY.
6. CRANKCASE HEATER AND CRANKCASE HEATER SWITCH FACTORY EQUIPPED WHEN REQUIRED.
7. DOUBLE POLE CONTACTOR SHOWN. SINGLE POLE CONTACTOR COULD BE FACTORY EQUIPPED AS AN ALTERNATE CONFIGURATION.

SEE UNIT RATING PLATE FOR TYPE AND SIZE OF OVER CURRENT PROTECTION

JUNCTION
TERMINAL
INTERNAL TO INTEGRATED CONTROL
PLUG CONNECTION
SWITCH (PRESS.)
OVERCURRENT PROT. DEVICE
EQUIPMENT GROUND
FIELD GROUND
FIELD SPLICE
SWITCH (TEMP)
IGNITER

208-240/1/60 0140L02907-B

FACTORY WIRING
LINE VOLTAGE
LOW VOLTAGE
OPTIONAL HIGH VOLTAGE
OPTIONAL LOW VOLTAGE

FIELD WIRING
HIGH VOLTAGE
LOW VOLTAGE

WIRE CODE

BK	BLACK
BL	BLUE
BR	BROWN
GR	GREEN
OR	ORANGE
PK	PINK
RD	RED
PU	PURPLE
YL	YELLOW
WH	WHITE
BL/PK	BLUE WITH PINK STRIP
YL/PK	YELLOW WITH PINK STRIP

THERMOSTAT++ FIELD WIRING

NO ECONOMIZER

WITH ECONOMIZER OPTION

2 STAGE COOLING

WARNING

HIGH VOLTAGE! DISCONNECT ALL POWER BEFORE SERVICING OR INSTALLING THIS UNIT. MULTIPLE POWER SOURCES MAY BE PRESENT. FAILURE TO DO SO MAY CAUSE PROPERTY DAMAGE, PERSONAL INJURY OR DEATH.

Wiring is subject to change. Always refer to the wiring diagram on the unit for the most up-to-date wiring.

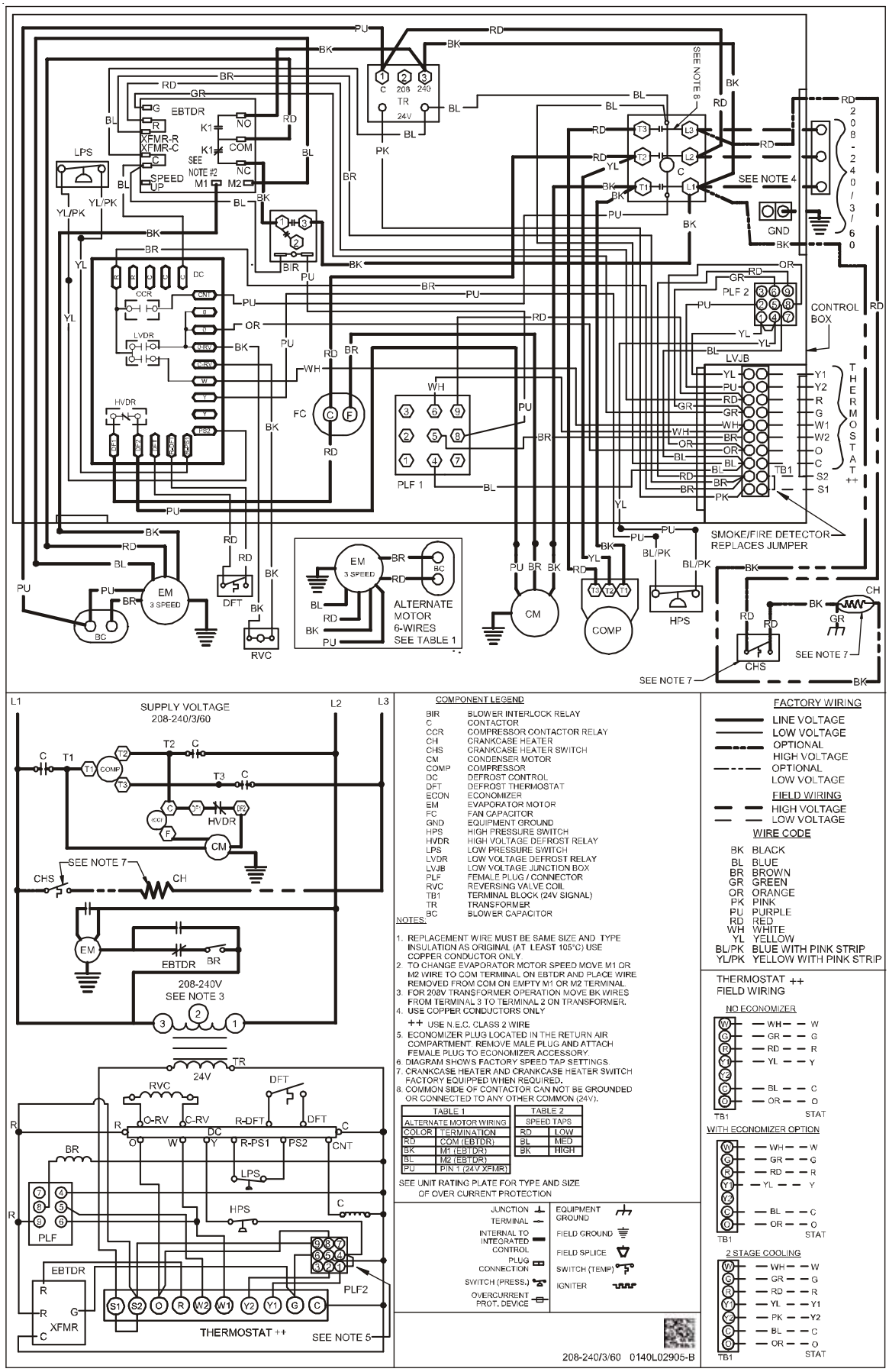

WARNING

HIGH VOLTAGE! DISCONNECT ALL POWER BEFORE SERVICING OR INSTALLING THIS UNIT. MULTIPLE POWER SOURCES MAY BE PRESENT. FAILURE TO DO SO MAY CAUSE PROPERTY DAMAGE, PERSONAL INJURY OR DEATH.

Wiring is subject to change. Always refer to the wiring diagram on the unit for the most up-to-date wiring.

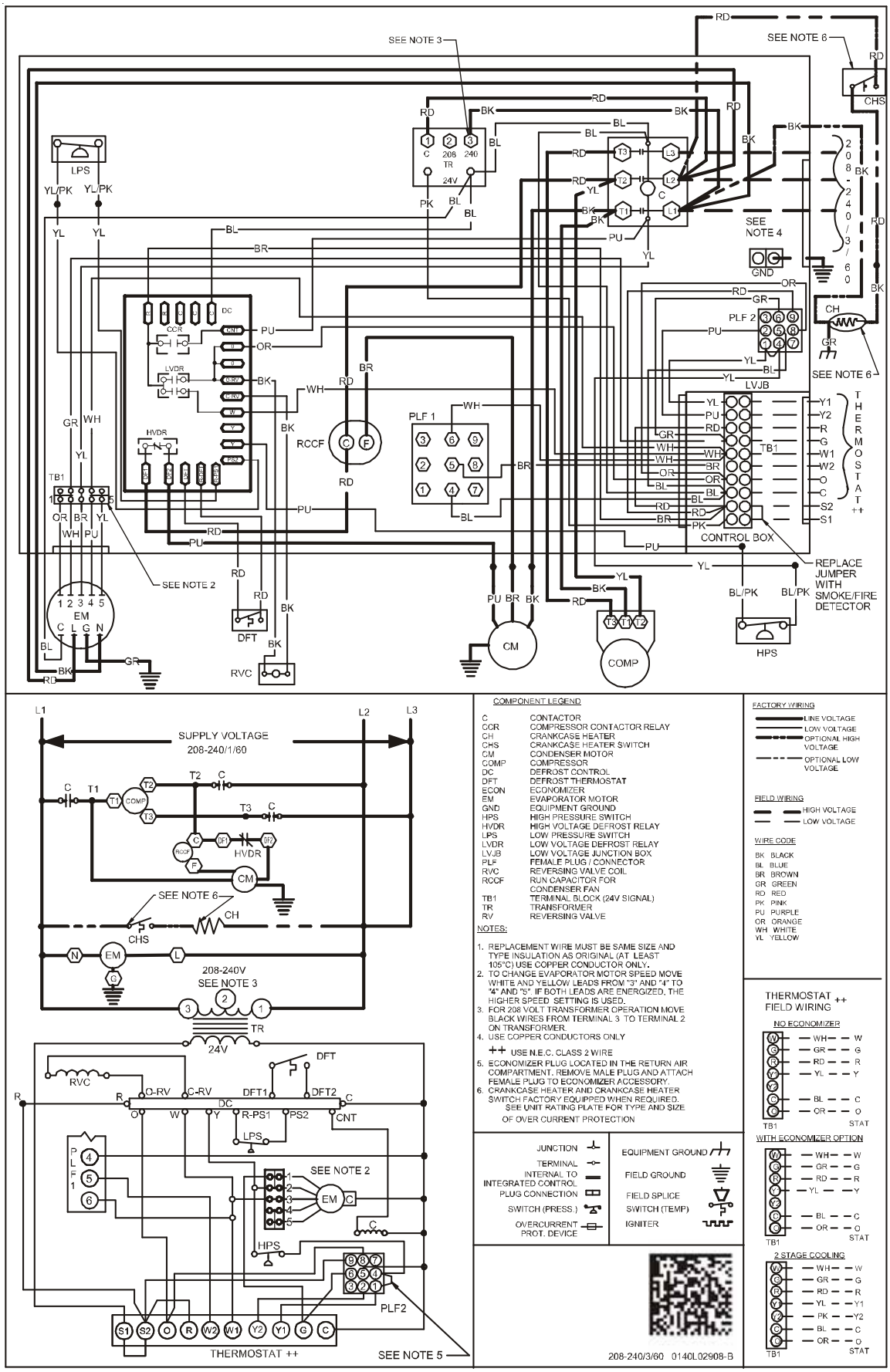

COMPONENT LEGEND

C	CONTACTOR
CCR	COMPRESSOR CONTACTOR RELAY
CH	CRANKCASE HEATER
CHS	CRANKCASE HEATER SWITCH
CM	CONDENSER MOTOR
COMP	COMPRESSOR
DC	DEFROST CONTROL
DFT	DEFROST THERMOSTAT
ECON	ECONOMIZER
EM	EVAPORATOR MOTOR
GND	EQUIPMENT GROUND
HPS	HIGH PRESSURE SWITCH
HVDR	HIGH VOLTAGE DEFROST RELAY
LPS	LOW PRESSURE SWITCH
LVDR	LOW VOLTAGE DEFROST RELAY
LVJB	LOW VOLTAGE JUNCTION BOX
PLF	FEMALE PLUG / CONNECTOR
RVC	REVERSING VALVE COIL
RCCF	RUN CAPACITOR FOR CONDENSER FAN
TB1	TERMINAL BLOCK (24V SIGNAL)
TR	TRANSFORMER
RV	REVERSING VALVE

NOTES:

1. REPLACEMENT WIRE MUST BE SAME SIZE AND TYPE INSULATION AS ORIGINAL (AT LEAST 105°C) USE COPPER CONDUCTOR ONLY.
2. TO CHANGE EVAPORATOR MOTOR SPEED MOVE WHITE AND YELLOW LEADS FROM "3" AND "4" TO "4" AND "5" IF BOTH LEADS ARE ENERGIZED, THE HIGHER SPEED SETTING IS USED.
3. FOR 208 VOLT TRANSFORMER OPERATION MOVE BLACK WIRES FROM TERMINAL 3 TO TERMINAL 2 ON TRANSFORMER.
4. USE COPPER CONDUCTORS ONLY

   ++ USE N.E.C. CLASS 2 WIRE
5. ECONOMIZER PLUG LOCATED IN THE RETURN AIR COMPARTMENT. REMOVE MALE PLUG AND ATTACH FEMALE PLUG TO ECONOMIZER ACCESSORY.
6. CRANKCASE HEATER AND CRANKCASE HEATER SWITCH FACTORY EQUIPPED WHEN REQUIRED. SEE UNIT RATING PLATE FOR TYPE AND SIZE OF OVER CURRENT PROTECTION

FACTORY WIRING

- LINE VOLTAGE
- LOW VOLTAGE
- OPTIONAL HIGH VOLTAGE
- OPTIONAL LOW VOLTAGE

FIELD WIRING

- HIGH VOLTAGE
- LOW VOLTAGE

WIRE CODE

BK	BLACK
BL	BLUE
BR	BROWN
GR	GREEN
RD	RED
PK	PINK
PU	PURPLE
OR	ORANGE
WH	WHITE
YL	YELLOW

THERMOSTAT ++ FIELD WIRING

NO ECONOMIZER

TB1	STAT
W	W
G	G
R	R
Y	Y
C	C
O	O

WITH ECONOMIZER OPTION

TB1	STAT
W	W
G	G
R	R
Y	Y
C	C
O	O

2 STAGE COOLING

TB1	STAT
W	W
G	G
R	R
Y	Y1
Y2	Y2
C	C
O	O

JUNCTION
TERMINAL
INTERNAL TO INTEGRATED CONTROL
PLUG CONNECTION
SWITCH (PRESS.)
OVERCURRENT PROT. DEVICE
EQUIPMENT GROUND
FIELD GROUND
FIELD SPLICE
SWITCH (TEMP)
IGNITER

208-240/3/60 0140L02908-B

WARNING

HIGH VOLTAGE! DISCONNECT ALL POWER BEFORE SERVICING OR INSTALLING THIS UNIT. MULTIPLE POWER SOURCES MAY BE PRESENT. FAILURE TO DO SO MAY CAUSE PROPERTY DAMAGE, PERSONAL INJURY OR DEATH.

Wiring is subject to change. Always refer to the wiring diagram on the unit for the most up-to-date wiring.

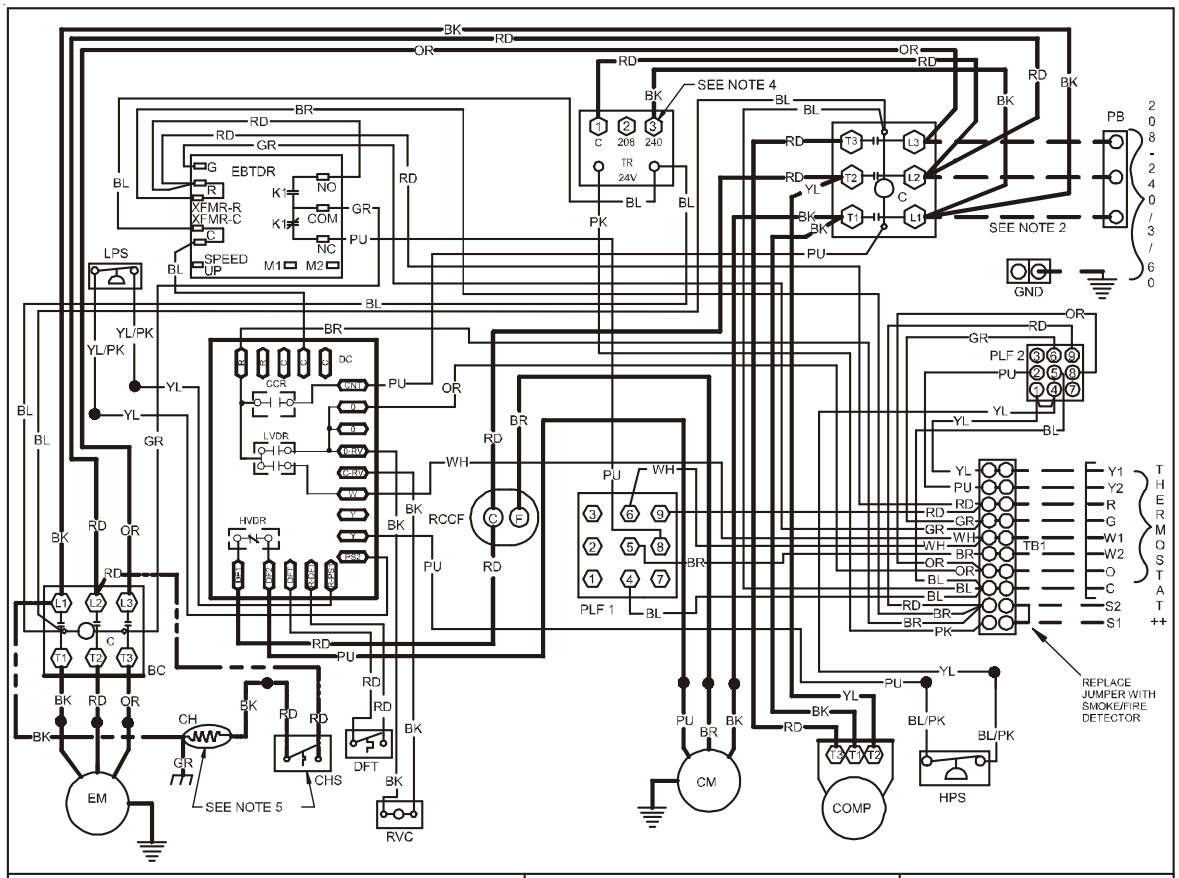

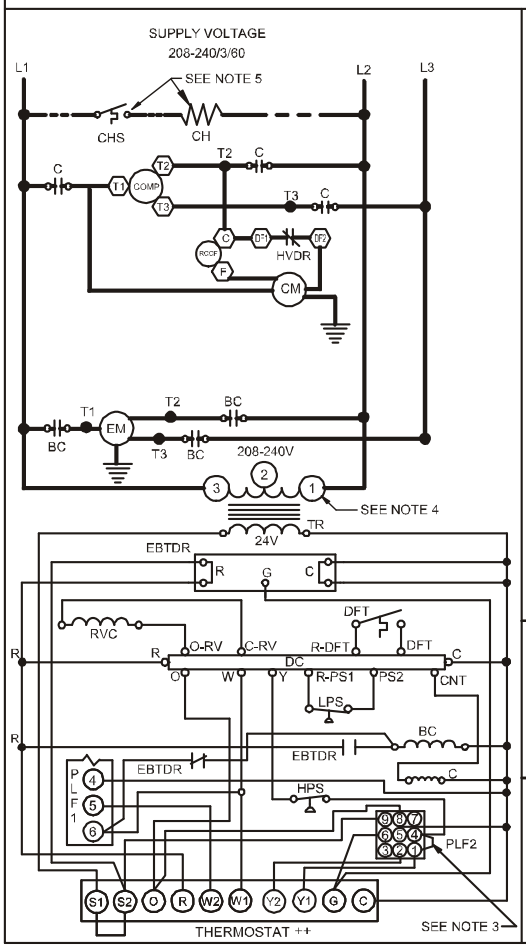

COMPONENT LEGEND

BC	BLOWER CONTACTOR
C	COMPRESSOR CONTACTOR RELAY
CCR	CONTACTOR
CH	CRANKCASE HEATER
CHS	CRANKCASE HEATER SWITCH
CM	CONDENSER MOTOR
COMP	COMPRESSOR
DC	DEFROST CONTROL
DFT	DEFROST THERMOSTAT
ECON	ECONOMIZER
EBTDE	ELECTRONIC BLOWER TIME DELAY
MR	EVAPORATOR MOTOR RELAY
EM	EVAPORATOR MOTOR
GND	EQUIPMENT GROUND
HPS	HIGH PRESSURE SWITCH
HVDR	HIGH VOLTAGE DEFROST RELAY
LPS	LOW PRESSURE SWITCH
LVDR	LOW VOLTAGE DEFROST RELAY
PLF	FEMALE PLUG / CONNECTOR
RVC	REVERSING VALVE COIL
RCCF	RUN CAPACITOR FOR CONDENSER FAN
TB1	TERMINAL BLOCK (24V SIGNAL)
TR	TRANSFORMER

NOTES:

1. REPLACEMENT WIRE MUST BE SAME SIZE AND TYPE INSULATION AS ORIGINAL (AT LEAST 105°C) USE COPPER CONDUCTOR ONLY.
2. USE COPPER CONDUCTORS ONLY

   ++ USE N.E.C. CLASS 2 WIRE
3. ECONOMIZER PLUG LOCATED IN THE RETURN AIR COMPARTMENT. REMOVE MALE PLUG AND ATTACH FEMALE PLUG TO THE ECONOMIZER ACCESSORY.
4. FOR 208 VOLT TRANSFORMER OPERATION MOVE BLACK WIRE FROM TERMINAL 3 TO TERMINAL 2 ON TRANSFORMER.
5. CRANKCASE HEATER AND CRANKCASE HEATER SWITCH FACTORY EQUIPPED WHEN REQUIRED.

SEE UNIT RATING PLATE FOR TYPE AND SIZE OF OVER CURRENT PROTECTION

JUNCTION
TERMINAL
INTERNAL TO INTEGRATED CONTROL
PLUG CONNECTION
SWITCH (PRESS.)
OVERCURRENT PROT. DEVICE
EQUIPMENT GROUND
FIELD GROUND
FIELD SPLICE
SWITCH (TEMP)
IGNITER

208-240/3/60 0140L02909-B

FACTORY WIRING
- LINE VOLTAGE
- LOW VOLTAGE
- OPTIONAL HIGH VOLTAGE
- OPTIONAL LOW VOLTAGE

FIELD WIRING
- HIGH VOLTAGE
- LOW VOLTAGE

WIRE CODE

BK	BLACK
BL	BLUE
BR	BROWN
GR	GREEN
OR	ORANGE
PK	PINK
PU	PURPLE
RD	RED
WH	WHITE
YL	YELLOW
BL/PK	BLUE WITH PINK STRIP
YL/PK	YELLOW WITH PINK STRIP

THERMOSTAT ++ FIELD WIRING

NO ECONOMIZER

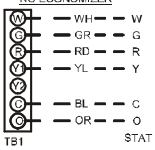

WITH ECONOMIZER OPTION

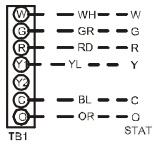

2 STAGE COOLING

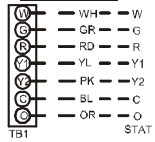

WARNING

HIGH VOLTAGE! DISCONNECT ALL POWER BEFORE SERVICING OR INSTALLING THIS UNIT. MULTIPLE POWER SOURCES MAY BE PRESENT. FAILURE TO DO SO MAY CAUSE PROPERTY DAMAGE, PERSONAL INJURY OR DEATH.

Wiring is subject to change. Always refer to the wiring diagram on the unit for the most up-to-date wiring.

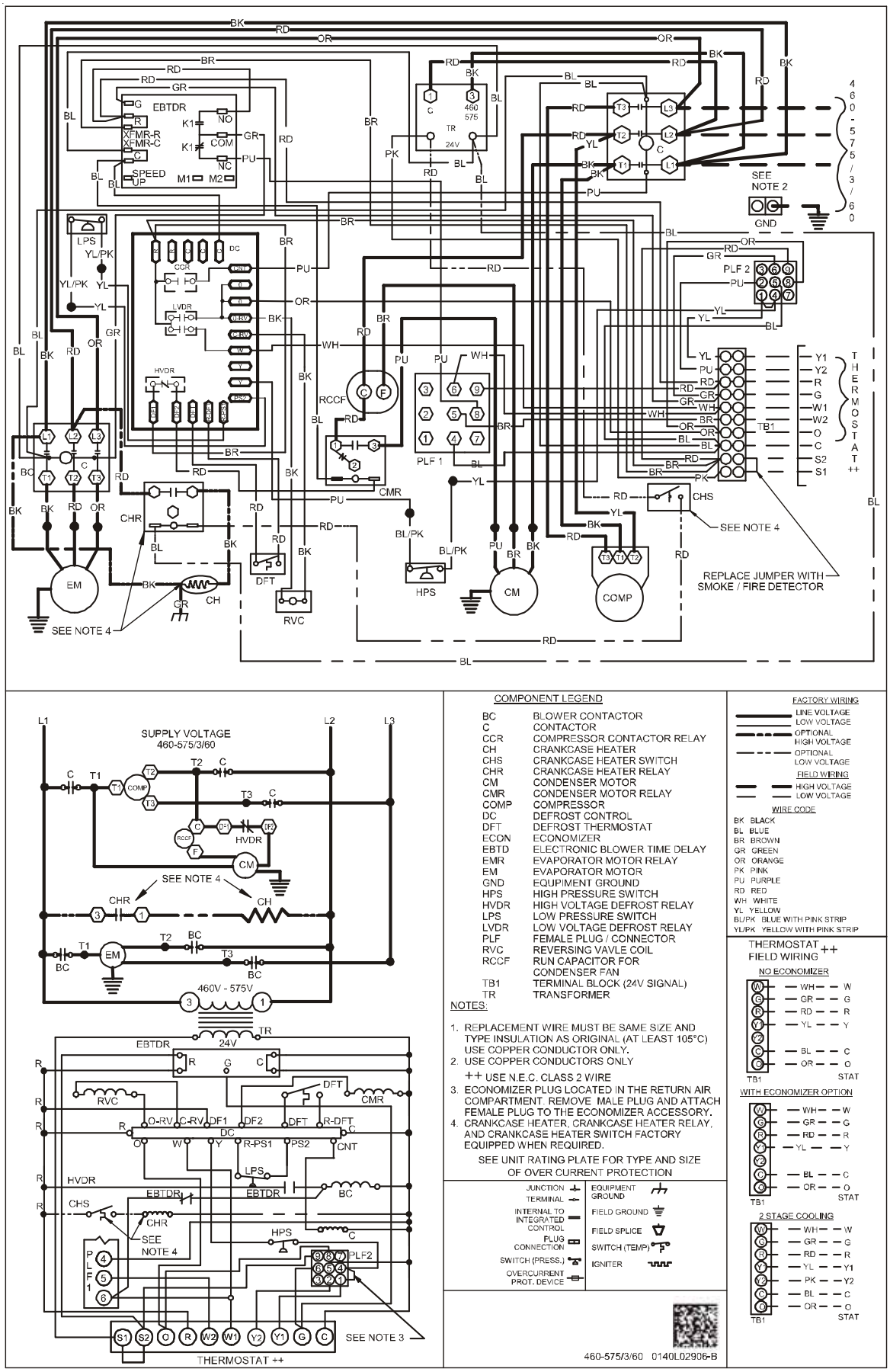

Wiring is subject to change. Always refer to the wiring diagram on the unit for the most up-to-date wiring.

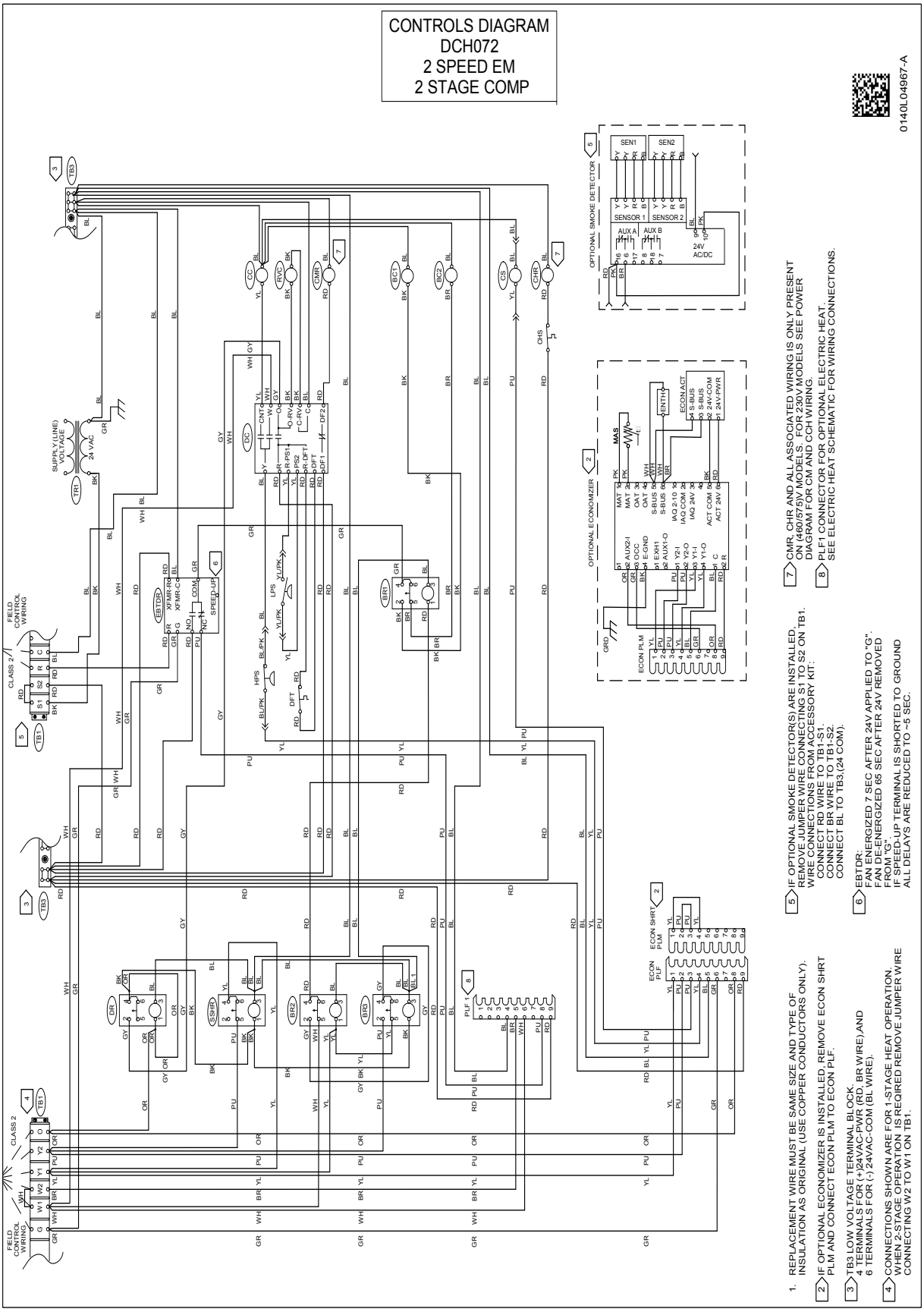

WARNING

HIGH VOLTAGE!
DISCONNECT ALL POWER BEFORE SERVICING OR INSTALLING THIS UNIT. MULTIPLE POWER SOURCES MAY BE PRESENT. FAILURE TO DO SO MAY CAUSE PROPERTY DAMAGE, PERSONAL INJURY OR DEATH.

Wiring is subject to change. Always refer to the wiring diagram on the unit for the most up-to-date wiring.

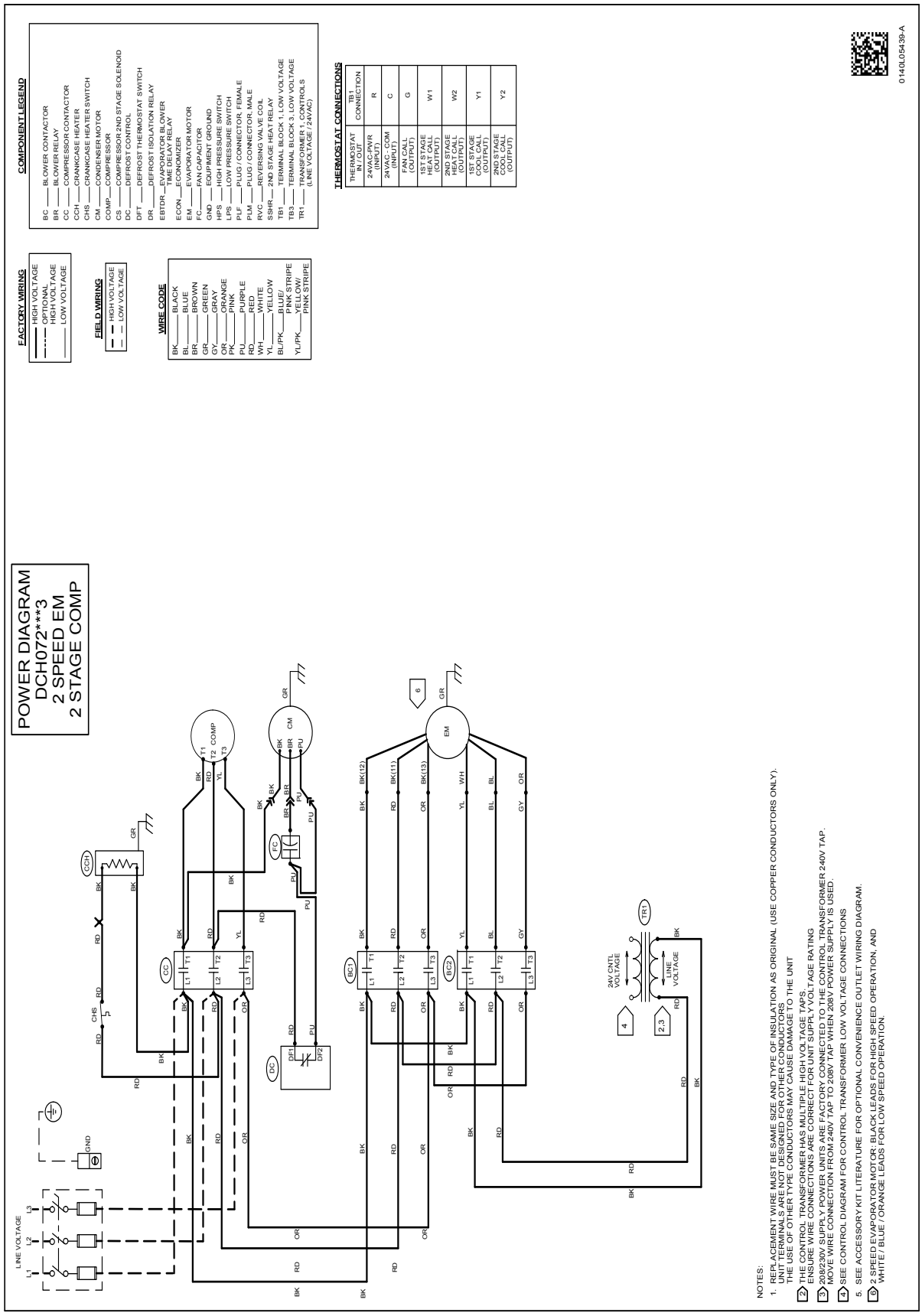

Wiring is subject to change. Always refer to the wiring diagram on the unit for the most up-to-date wiring.

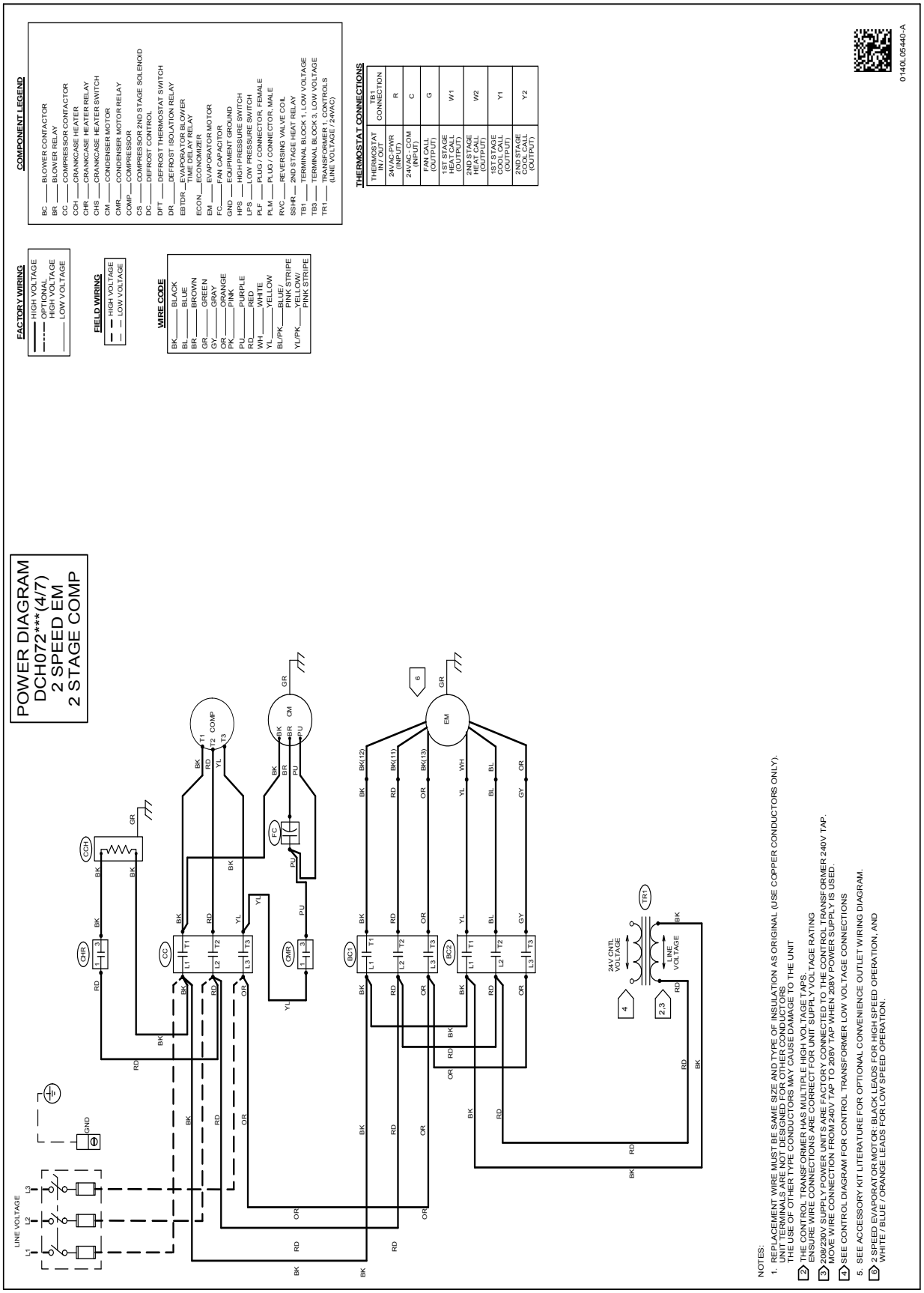

WARNING

HIGH VOLTAGE!
DISCONNECT ALL POWER BEFORE SERVICING OR INSTALLING THIS UNIT. MULTIPLE POWER SOURCES MAY BE PRESENT. FAILURE TO DO SO MAY CAUSE PROPERTY DAMAGE, PERSONAL INJURY OR DEATH.

Wiring is subject to change. Always refer to the wiring diagram on the unit for the most up-to-date wiring.