DAIKIN Service Instructions

DP3GM & DP5GM SEER2 Gas Electric Package Units with R-410A Refrigerant & Accessories

WARNING

ONLY PERSONNEL THAT HAVE BEEN TRAINED TO INSTALL, ADJUST, SERVICE, MAINTENANCE OR REPAIR (HEREINAFTER, "SERVICE") THE EQUIPMENT SPECIFIED IN THIS MANUAL SHOULD SERVICE THE EQUIPMENT.

THIS EQUIPMENT IS NOT INTENDED FOR USE BY PERSONS (INCLUDING CHILDREN) WITH REDUCED PHYSICAL, SENSORY OR MENTAL CAPABILITIES, OR LACK OF EXPERIENCE AND KNOWLEDGE, UNLESS THEY HAVE BEEN GIVEN SUPERVISION OR INSTRUCTION CONCERNING USE OF THE APPLIANCE BY A PERSON RESPONSIBLE FOR THEIR SAFETY.

CHILDREN SHOULD BE SUPERVISED TO ENSURE THAT THEY DO NOT PLAY WITH THE EQUIPMENT.

THE MANUFACTURER WILL NOT BE RESPONSIBLE FOR ANY INJURY OR PROPERTY DAMAGE ARISING FROM IMPROPER SUPERVISION, SERVICE OR SERVICE PROCEDURES. IF YOU SERVICE THIS UNIT, YOU ASSUME RESPONSIBILITY FOR ANY INJURY OR PROPERTY DAMAGE WHICH MAY RESULT. IN ADDITION, IN JURISDICTIONS THAT REQUIRE ONE OR MORE LICENSES TO SERVICE THE EQUIPMENT SPECIFIED IN THIS MANUAL, ONLY LICENSED PERSONNEL SHOULD SERVICE THE EQUIPMENT. IMPROPER SUPERVISION, INSTALLATION, ADJUSTMENT, SERVICING, MAINTENANCE OR REPAIR OF THE EQUIPMENT SPECIFIED IN THIS MANUAL, OR ATTEMPTING TO INSTALL, ADJUST, SERVICE OR REPAIR THE EQUIPMENT SPECIFIED IN THIS MANUAL WITHOUT PROPER SUPERVISION OR TRAINING MAY RESULT IN PRODUCT DAMAGE, PROPERTY DAMAGE, PERSONAL INJURY OR DEATH.

WARNING

DO NOT BYPASS SAFETY DEVICES.

TABLE OF CONTENTS

IMPORTANT INFORMATION 2
NOMENCLATURE 5
SYSTEM OPERATION 6
SERVICING TABLE OF CONTENTS 13
SERVICING 15
BLOWER PERFORMANCE DATA 49
TROUBLESHOOTING 55
MAINTENANCE 59
WIRING DIAGRAMS 80
SCHEDULED MAINTENANCE 88

This manual is to be used by qualified, professionally trained HVAC technicians only. Daikin does not assume any responsibility for property damage or personal injury due to improper service procedures or services performed by an unqualified person.

RSD6300012r10
March 2023

Copyright © 2023 DAIKIN COMFORT TECHNOLOGIES MANUFACTURING, L.P.

IMPORTANT INFORMATION

Pride and workmanship go into every product to provide our customers with quality products. It is possible, however, that during its lifetime a product may require service. Products should be serviced only by a qualified service technician who is familiar with the safety procedures required in the repair and who is equipped with the proper tools, parts, testing instruments and the appropriate service manual. **REVIEW ALL SERVICE INFORMATION IN THE APPROPRIATE SERVICE MANUAL BEFORE BEGINNING REPAIRS.**

IMPORTANT NOTICES

RECOGNIZE SAFETY SYMBOLS, WORDS AND LABELS

WARNING

This unit should not be connected to, or used in conjunction with, any devices that are not design certified for use with this unit or have not been tested and approved by the manufacturer. Serious property damage or personal injury, reduced unit performance and/or hazardous conditions may result from the use of devices that have not been approved or certified by the manufacturer.

WARNING

Do not store combustible materials or use gasoline or other flammable liquids or vapors in the vicinity of this appliance as property damage or personal injury could occur. Have your contractor point out and identify the various cut-off devices, switches, etc., that serves your comfort equipment.

WARNING

HIGH VOLTAGE
Disconnect all power before servicing or installing this unit. Multiple power sources may be present. Failure to do so may cause property damage, personal injury or death.

To locate an authorized servicer, please consult your telephone book or the dealer from whom you purchased this product. For further assistance, please contact:

CONSUMER INFORMATION LINE - DAIKIN BRAND PRODUCTS

TOLL FREE 1-855-770-5678 (U.S. only)
email us at: customerservice@daikincomfort.com
fax us at: **(713) 856-1821**
(Not a technical assistance line for dealers.)

Outside the U.S., call **1-713-861-2500**
(Not a technical assistance line for dealers.)
Your telephone company will bill you for the call.

SAFE REFRIGERANT HANDLING

While these items will not cover every conceivable situation, they should serve as a useful guide.

WARNING

Refrigerants are heavier than air. They can "push out" the oxygen in your lungs or in any enclosed space. To avoid possible difficulty in breathing or death:

- **Never purge refrigerant into an enclosed room or space. By law, all refrigerants must be reclaimed.**
- **If an indoor leak is suspected, thoroughly ventilate the area before beginning work.**
- **Liquid refrigerant can be very cold. To avoid possible frostbite or blindness, avoid contact with refrigerant and wear gloves and goggles. If liquid refrigerant does contact your skin or eyes, seek medical help immediately.**
- **Always follow EPA regulations. Never burn refrigerant, as poisonous gas will be produced.**

WARNING

To avoid possible injury, explosion or death, practice safe handling of refrigerants.

WARNING

The compressor POE oil for R-410A units is extremely susceptible to moisture absorption and could cause compressor failure. Do not leave system open to atmosphere any longer than necessary for installation.

IMPORTANT INFORMATION

WARNING

To avoid possible explosion:

- **Never apply flame or steam to a refrigerant cylinder. If you must heat a cylinder for faster charging, partially immerse it in warm water.**
- **Never fill a cylinder more than 80% full of liquid refrigerant.**
- **Never add anything other than R-22 to an R-22 cylinder or R-410A to an R-410A cylinder. The service equipment used must be listed or certified for the type of refrigerant used.**
- **Store cylinders in a cool, dry place. Never use a cylinder as a platform or a roller.**

WARNING

To avoid possible explosion, use only returnable (not disposable) service cylinders when removing refrigerant from a system.

- **Ensure the cylinder is free of damage which could lead to a leak or explosion.**
- **Ensure the hydrostatic test date does not exceed 5 years.**
- **Ensure the pressure rating meets or exceeds 400 lbs.**

When in doubt, do not use cylinder.

WARNING

System contaminants, improper service procedure and/or physical abuse affecting hermetic compressor electrical terminals may cause dangerous system venting.

The successful development of hermetically sealed refrigeration compressors has completely sealed the compressor's moving parts and electric motor inside a common housing, minimizing refrigerant leaks and the hazards sometimes associated with moving belts, pulleys or couplings.

Fundamental to the design of hermetic compressors is a method whereby electrical current is transmitted to the compressor motor through terminal conductors which pass through the compressor housing wall. These terminals are sealed in a dielectric material which insulates them from the housing and maintains the pressure tight integrity of the hermetic compressor. The terminals and their dielectric embedment are strongly constructed, but are vulnerable to careless compressor installation or maintenance procedures and equally vulnerable to internal electrical short circuits caused by excessive system contaminants.

In either of these instances, an electrical short between the terminal and the compressor housing may result in the loss of integrity between the terminal and its dielectric embedment. This loss may cause the terminals to be expelled, thereby venting the vaporous and liquid contents of the compressor housing and system.

A venting compressor terminal normally presents no danger to anyone, providing the terminal protective cover is properly in place.

If, however, the terminal protective cover is not properly in place, a venting terminal may discharge a combination of

a. hot lubricating oil and refrigerant
b. flammable mixture (if system is contaminated with air)

in a stream of spray which may be dangerous to anyone in the vicinity. Death or serious bodily injury could occur.

Under no circumstances is a hermetic compressor to be electrically energized and/or operated without having the terminal protective cover properly in place.

See Service Section S-17 for proper servicing.

IMPORTANT INFORMATION

WARNING

FIRE OR EXPLOSION HAZARD

Failure to follow the safety warnings exactly could result in serious injury, death or property damage.

Never test for gas leaks with an open flame. Use a commercially available soap solution made specifically for the detection of leaks to check all connections. A fire or explosion may result causing property damage, personal injury or loss of life.

AVERTISSEMENT

RISQUE D'INCENDIE OU D'EXPLOSION

Si les consignes de sécurité ne sont pas suivies à la lettre, cela peut entraîner la mort, de graves blessures ou des dommages matériels.

Ne jamais vérifier la présence de fuites de gaz au moyen d'une flamme nue. Vérifier tous les raccords en utilisant une solution savonneuse commerciale conçue spécialement pour la détection de fuites. Un incendie ou une explosion risque de se produire, ce qui peut entraîner la mort, des blessures ou des dommages matériels.

AVERTISSEMENT

RISQUE D'INCENDIE OU D'EXPLOSION

Si les consignes de sécurité ne sont pas suivies à la lettre,cela peut entraîner la mort, de graves blessures ou des dommages matériels.

— Ne pas entreposer ni utiliser d'essence ni autres vapeurs ou liquides inflammables à proximité de cet appareil ou de tout autre appareil.

— QUE FAIRE SI UNE ODEUR DE GAZ EST DÉTECTÉE

- Ne mettre en marche aucun appareil.
- Ne toucher aucun interrupteur électrique; ne pas utiliserde téléphone dans le bâtiment.
- Quitter le bâtiment immédiatement.
- Appeler immédiatement le fournisseur de gaz en utilisant le téléphone d'un voisin. Suivre les instructions du fournisseur de gaz.
- Si le fournisseur de gaz n'est pas accessible, appeler leservice d'incendie.

— L'installation et l'entretien doivent être effectués par uninstallateur ou une entreprise d'entretien qualifié, ou le fournisseur de gaz.

WARNING

CARBON MONOXIDE POISONING HAZARD

Failure to follow instructions could result in severe personal injury or death due to carbon-monoxide poisoning, if combustion products infiltrate into the building. Check that all openings in the outside wall around the vent (and air intake) pipe(s) are sealed to prevent infiltration of combustion products into the building. Check that furnace vent (and air intake) terminal(s) are not obstructed in any way during all seasons.

AVERTISSEMENT

RISQUE D'INTOXICATION AU MONOXYDE DE CARBONE

Si ces directives ne sont pas suivies, cela peut entraîner des blessures graves ou une intoxication au monoxyde de carbone pouvant causer la mort, si des produits de combustion s'infiltrent dans le bâtiment. Vérifier que toutes les ouvertures pratiquées dans le mur extérieur autour du ou des tuyaux d'évent (et de la prise d'air) sont scellées de manière à empêcher l'infiltration de produits de combustion dans le bâtiment. Veiller à ce que la ou les sorties de l'évent de l'appareil de chauffage (et la prise d'air) ne soient, en aucune façon, obstruées, quelle que soit la saison.

PRODUCT IDENTIFICATION

NOMENCLATURE

D	P	3	G	M	36	080	4	1	A	A
1	2	3	4	5	6,7	8,9,10	11	12	13	14

Brand

D- Daikin

Product Category

P- Packaged Unit

Efficiency

3- 13.4 SEER2

5- 15.2 SEER2

Unit Type

G- Gas/Electric

Airflow

M- Multi-position

Tonnage Nominal

24- 2 tons

30- 2½ tons

36- 3 tons

42- 3½ tons

48- 4 tons

61- 5 tons

Heat Input

040 40 MBTU/H

060 60 MBTU/H

080 80 MBTU/H

100 100 MBTU/H

120 120 MBTU/H

Refrigerant

4- R-410A

Electrical

1- 208/230V single-phase, 60 Hz

Major Revision

A

Minor Revision

A

PCBAG123 IGNITION CONTROL SEQUENCE OF OPERATION

Continuous Fan

1. When the thermostat calls for continuous fan (G) with out a call for heat or cooling, the indoor the fan has a 7 second delay on make and energizes the "HEAT" speed. The fan remains energized as long as the call for fan remains without a call for heat or cooling. The fan call "G" has a 60 second delay on break. Note: When the Configuration tab is broken, the continuous fan mode "G" will have a 7 second delay on make and a 60 second delay on break and the "COOL" speed tap will be energized.
2. If a call for cool (Y) occurs during continuous fan, the blower will switch over to "COOL" speed.
3. If a call for heat (W) occurs during continuous fan, the blower will remain energized through the heat cycle or until "G" is de-energized.
4. The continuous fan operation will function while the control is in heat mode lockout.

Cool Mode

1. When the thermostat calls for cooling ("Y"), the control energizes the cooling speed fan after a 7 second on delay. The control provides a 3 minute anti-short cycle protection for the compressor. If the compressor has been off for 3 or more minutes, the compressor immediately energizes when the thermostat calls for cool. If the compressor has not been off for at least 3 minutes when a call for cool occurs, the control waits until 3 minutes has elapsed from the time the compressor was last de-energized before re-energizing the compressor.
2. When the thermostat removes the call for cooling ("Y") the compressor is deenergized and the control deenergizes the cooling speed fan after a cooling off delay period of 60 seconds.

NOTE: A call for cooling has priority over continuous fan. If G is energized while Y is energized, during the cooling fan on delay, the fan will remain off until the delay is over.

NOTE: The cooling fan operation will continue to function while the control is in heat lockout.

NOTE: If a call for heat exist with a call for cooling, the call for heat shall proceed as normal except the fan remains energized on cool speed.

Heat Mode

1. CALL FOR HEAT - The thermostat calls for heat by energizing the "W" terminal. The control checks to see if the pressure switch is open. If the pressure switch is closed, the control will flash code "3" on the LED and wait indefinitely for the pressure switch to open. The control will lockout the call for heat if the pressure switch is closed before the induced draft motor is energized.
2. PRE-PURGE - The control energizes the induced draft motor, flashes code "2" on LED, and waits for the pressure switch to close. When the pressure switch has closed, the control stops flashing the LED and begins timing the 15 second pre-purge period. NOTE: Under normal operation, the LED will not flash if the pressure switch closes immediately after energizing the induced draft motor.
3. IGNITION - The control energizes the gas valve and spark. If flame is not established within 7 seconds, the gas valve and spark is de-energized and the control goes to an inter-purge. If flame is established, the spark is de-energized and the control goes to heat blower on delay.
4. Heat Blower On Delay - The control waits for 30 second heat fan on delay and then energizes the indoor blower heat speed. If the blower is already energized by a call for cooling or continuous fan, or in a blower off delay period, the on delay is skipped and control goes to steady heat.
5. STEADY HEAT - Control inputs are continuously monitored to ensure limit and pressure switches are closed, flame is established, and the thermostat call for heat remains.
6. POST PURGE - When the thermostat demand for heat is satisfied, the control immediately deenergizes the gas valve. The inducer output remains on for a 29 second post-purge period.
7. Heat Blower Off Delay - The indoor blower motor is de-energized after the selected blower off delay time. Blower timing begins when the thermostat is satisfied.

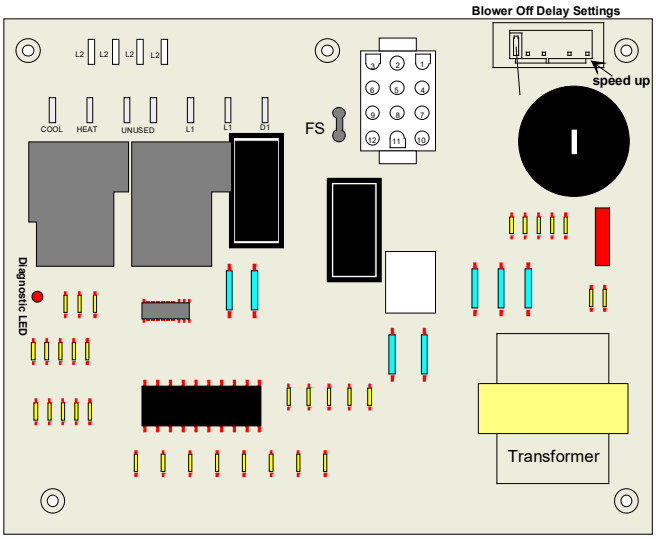

Pin	Voltage	Function
1	24VAC	24VAC Input (from Transformer)
2	24VAC	24VAC Common (Chassis Ground)
3	24VAC	Gas Valve Output
4	24VAC	Limit Switch Output
5	24VAC	Limit Switch Input (Common with Pin 9)
6	24VAC	Pressure Switch Input
7	24VAC	Thermostat Fan (G) Input
8	24VAC	Pressure Switch Output (Common with Pin 10)
9	24VAC	Thermostat "R" (Common with Pin 5)
10	24VAC	Thermostat Heat Input (W) (Common with Pin 8)
11	24VAC	Thermostat Cool Input (Y)
12	24VAC	Compressor Contactor Output

Table 1
PCBAG123 Single Stage Control Circuit Definitions for 12-Circuit Connector

Terminal	Label
230VAC Line 1 Input (x2)	L1
230VAC Line 2 Input (x4)	L2
Indoor Blower Heat Speed	HEAT
Indoor Blower Cool Speed	COOL
Induced Drafter Blower Output	DI
Unused/Motor Speed Park Terminals (x2)	UNUSED
Flame Sensor	FS
Continuous Fan (G) / Economizer	ECON
Spark Igniter Output	SPARK

Table 2
PCBAG123 Single Stage Control Terminal Definitions

Period	Timing
Pre-Purge	15 Seconds
Inter-Purge	15 Seconds
Post Purge	29 Seconds
Trial-for-Ignition (TFI)	7 Seconds
Flame Stabilization Period	10 Seconds
Heat ON Delay	30 Seconds
Heat OFF Delay	Selectable 120, 135 or 150 Seconds
Cool ON Delay	7 Seconds
Cool OFF Delay	60 Seconds
Ignition Attempts	3 Attempts
Recycles Infinite	4 Recycles (5 Flame Losses)
Automatic Restart	60 Minutes
Compressor Short Cycle Delay	3 Minutes

Table 3
PCBAG123 Single Stage Control Timings

System Status	LED Flashes
Normal	On
Internal Fault/Gas Valve Fault	Off
Ignition Lockout	1
Pressure Switch Stuck Open	2
Pressure Switch Stuck Closed	3
Open High Temperature Limit	4
Flame Detected with Gas Valve De-Energized	5
Compressor Short Cycle Delay Active	6

Table 4
PCBAG123 Single Stage Control LED Status Codes

PCBAG127 IGNITION CONTROL SEQUENCE OF OPERATION

A. Heating Operation: Low Stage Heat

1. Thermostat type is set to two-stage.
2. Thermostat "W1" input initiates low stage heating.
3. Induced draft blower is energized at high speed for the pre-purge period. Pre-purge timer begins after control recognizes pressure switch has closed.
4. Trial-for-ignition period begins after pre-purge period expires. Low and high stage gas valves are energized along with the igniter for trial-for-ignition period. Igniter is de-energized when flame is detected.
5. Flame is achieved and detected during trial-for-ignition period. Flame stabilization period begins when flame is detected.
6. De-energize high stage gas valve and switch induced draft blower to low speed within five seconds of flame detection.
7. Air circulating blower is energized at low heat speed after heat ON delay time expires. Heat ON delay timer begins when flame is detected.
8. Control monitors thermostat, flame, limit, and pressure switch inputs during low stage heating.
9. Thermostat "W1" input is removed.
10. Low stage gas valve is de-energized.
11. Induced draft blower remains energized at low speed for post purge period.
12. Air circulating blower remains energized at low heat speed for heat OFF delay. Heat OFF delay begins when "W1" input is removed.
13. Control returns to Standby and awaits next thermostat request.

B. Heating Operation: High Stage Heat

1. Thermostat type is set to two-stage.
2. Thermostat "W1" and "W2" inputs initiate high stage heating.
3. Induced draft blower is energized at high speed for the pre-purge period. Pre-purge timer begins after control recognizes pressure switch has closed.
4. Trial-for-ignition period begins after pre-purge period expires. Low and high stage gas valves are energized along with the igniter for trial-for-ignition period. Igniter is de-energized when flame is detected.
5. Flame is achieved and detected during trial-for-ignition period. Flame stabilization period begins when flame is detected.
6. Gas valve and induced draft blower remain at high stage and high speed.
7. Air circulating blower is energized at high heat speed after heat ON delay time expires. Heat ON delay timer begins when flame is detected.
8. Control monitors thermostat, flame, limit, and pressure switch inputs during high stage heating.
9. Thermostat "W1" and "W2" inputs are removed.
10. High and low stage gas valves are de-energized.
11. Induced draft blower switches from high speed to low speed and remains energized for post purge period.
12. Air circulating blower remains energized at high heat speed for High Stage Heat OFF Delay period then switches to low heat speed for the remainder of the selected heat OFF delay. Heat OFF delay begins when "W1" and "W2" inputs are removed.
13. Control returns to Standby and awaits next thermostat request.

A. Cooling Operation: Low Stage Cool

1. Thermostat type is set to two-stage.
2. Thermostat "Y1" or thermostat "Y1" and "G" input initiates low stage cooling.
3. IDT/ODT/Pressure/Loss of Charge Switch circuits are checked for closed condition. Cooling operation can proceed only if these circuits are closed.
4. Low stage compressor output is energized.
5. Condenser fan motor is energized at low speed.
6. Air circulating blower is energized at low cool speed after cool ON delay expires. Cool ON delay timer begins when thermostat inputs are detected.
7. Control monitors thermostat, gas valve, flame, and IDT/ODT/Pressure/Loss of Charge Switches during low stage cooling.
8. Thermostat "Y1" or "Y1" and "G" inputs are removed.
9. Low stage compressor output is de-energized. Low speed condenser fan motor is de-energized.
10. Air circulating blower remains energized at low cool speed for the cool OFF delay. Cool OFF delay timer begins when thermostat input is removed.
11. Control returns to Standby and awaits next thermostat request.

B. Cooling Operation: High Stage Cool

Thermostat type is set to two-stage.

Thermostat "Y1" and "Y2" or "Y1", "Y2" and "G" inputs initiate high stage cooling.

IDT/ODT/Pressure/Loss of Charge Switch circuits are checked for closed condition. Cooling operation can proceed only if these circuits are closed.

1. Low and high stage compressor outputs are energized.
2. Condenser fan motor is energized at high speed.
3. Air circulating blower is energized at high cool speed after cool ON delay expires. Cool ON delay timer begins when thermostat inputs are detected.

Control monitors thermostat, gas valve, flame, and IDT/ODT/Pressure/Loss of Charge Switches during high stage cooling operation.

Thermostat "Y1" and "Y2" or "Y1", "Y2" and "G" inputs are removed.

Low and high stage compressor outputs are de-energized.

High speed condenser fan motor is de-energized.

4. Air circulating blower switches to low cool speed for the cool OFF delay. Cool OFF delay timer begins when thermostat input is removed.

Control returns to Standby and awaits next thermostat request.

A. Continuous Fan Operation

1. Thermostat "G" input initiates Continuous Fan operation.
2. Air circulation blower shall be immediately energized at the continuous fan speed. For purposes of this specification, the continuous fan speed shall be the low heat speed.
3. Thermostat "G" input is removed.
4. Air circulation blower is immediately de-energized.
5. Control returns to Standby and awaits next thermostat request.

PCBAG127 CONTROL BOARD

Description

The ignition control is designed for use in gas heating/electric cooling package equipment (rooftop applications) and operates with a two stage heat and two stage cooling system. It is a direct spark ignition system that uses a 22,000 volt spark to ignite the burners. A flame sensor is used to monitor the flame.

The board has the option of using a single or two stage thermostat. The board also controls the indoor blower and has an adjustable heat fan off delay.

There is also a fault recall button for recalling the last 5 fault codes. To recall the fault codes, depress the fault recall button for at least 2 seconds but not more than 4 seconds. To clear the fault code memory, depress the fault recall button for at least 5 seconds.

The following tables list the functions for the connectors and terminals, the timings, and the fault codes for the PCBAG127 control board.

WARNING

High voltage
Disconnect all power before servicing or installing this unit. Multiple power sources may be present. Failure to do so may cause property damage, personal injury or death.

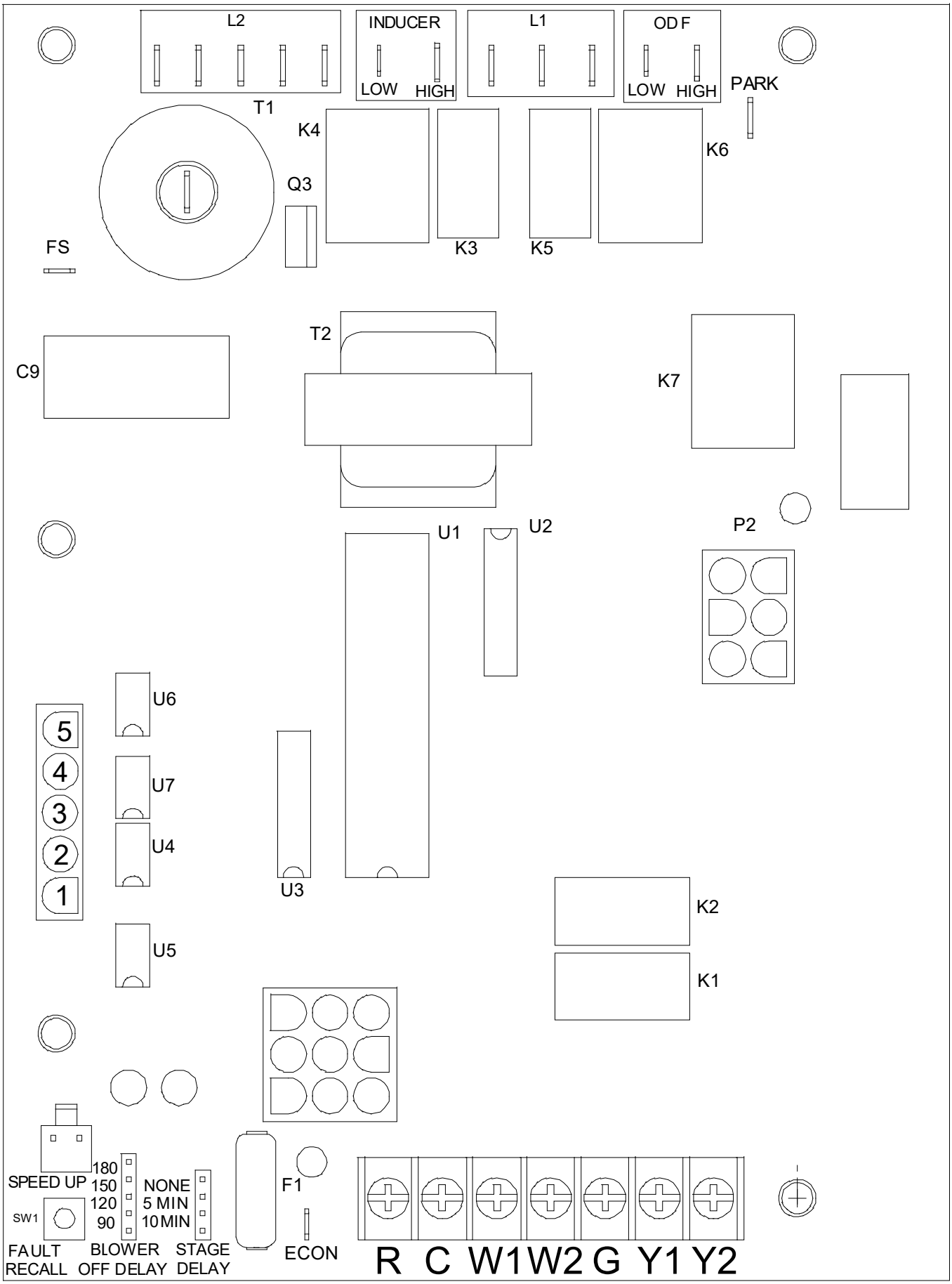
L2
INDUCER
LOW
HIGH
L1
ODF
LOW
HIGH
PARK
T1
K4
K6
Q3
FS
K3
K5
T2
C9
K7
U1
U2
P2
U6
5
4
3
2
1
U7
U4
U3
K2
U5
K1
SPEED UP
SW1
180
150
120
90
NONE
5 MIN
10MIN
F1
FAULT
RECALL
BLOWER
OFF DELAY
STAGE
DELAY
ECON
R C W1 W2 G Y1 Y2

SYSTEM OPERATION

Pin	Voltage	Function
1	24VAC	Indoor/Outdoor Thermostat (IDT/ODT) Output
2	24VAC	High Stage Compressor Output
3	24VAC	Pressure Switch/Loss of Charge Switch Input
4	24VAC	Indoor/Outdoor Thermostat (IDT/ODT) Input
5	24VAC	Pressure Switch/Loss of Charge Switch Output
6	24VAC	Low Stage Compressor Output

Table 1
Circuit Definitions And Voltage Ratings For The 6-Circuit Connector Circuits

Pin	Voltage	Function
1	24VAC	Limit Switch Output
2	24VAC	24VAC Input to Control
3	24VAC	Limit Switch Input
4	24VAC	Unused
5	24VAC	24VAC Common
6	24VAC	Pressure Switch Output
7	24VAC	Main Valve High Output
8	24VAC	Pressure Switch Input
9	Unused	Main Valve Low Output

Table 2
Circuit Definitions And Voltage Ratings For The 9-Circuit Connector Circuits

Terminal	Label
Line Voltage L1	L1
Transformer Line L1	L1
Air Circulating Blower Line 1	L1
Induced Draft Blower Low Speed	DI Low or "Inducer Low"
Induced Draft Blower High Speed	DI High or "Inducer High"
Condenser Fan Motor Low Speed	ODF Low
Condenser Fan Motor High Speed	ODF High
Line Voltage L2	L2
Transformer Line L2	L2
Air Circulating Blower Line 2	L2
Induced Draft Blower Line 2	L2
Condenser Fan Motor Line 2	L2
Direct Spark Igniter	T1
Flame Detection	FS

Table 3
High Voltage Terminals

Period	Timing
Pre-Purge	15 Seconds
Inter-Purge	30 Seconds
Post Purge	30 Seconds
Trial-for-Ignition (TFI)	7 Seconds
Flame Stabilization Period	10 Seconds
Flame Failure Response Time	2 Seconds within Flame Stabilization Period
	2 Seconds or Per ANSI Z21.20 Outside of Flame Stabilization Period
Low to High Stage Delay	Selectable 5 minutes or 10 minutes (Default = 10 minutes)
Heat ON Delay	30 Seconds
Heat OFF Delay	Selectable 90, 120, 150, or 180 Seconds (Default = 150 Seconds)
High Stage Heat OFF Delay	30 Seconds
Cool ON Delay	6 Seconds
Cool OFF Delay	45 Seconds
Continuous Fan ON Delay	0 Seconds
Continuous Fan OFF Delay	0 Seconds
Ignition Attempts	3
Recycles	Infinite
Automatic Restart	60 Minutes
Pressure Switch Lockout Delay	5 Minutes
Factory Test Mode Active Time	2 Minutes Maximum

Table 4
Control Timings

Color	Function	LED Flashes/Status
Red	Normal	On
	Intrnal/Gas Valve Fault	Off
	Lockout	1
	Pressure Switch Stuck Open	2
	Pressure Switch Stuck Closed	3
	Open High Temperature Limit	4
	Flame Detected with Gas Valve De-Energized	5
	Compressor Short Cycle Delay Active	6
	Limit Opened 5 Times in Same Call For Heat	7
	Indoor Thermostat/Outdoor Thermostat is Open	8
	Pressure Switch/Loss of Charge Switch is Open	9
Amber	Normal Flame	On
	No Flame Present	Off
	Low Flame Current	1
	Flame Detected with Gas Valve De-energized	2

Table 5
LED Status Codes and Corresponding System Conditions

SYSTEM OPERATION

Typical Package Cooling or Package Gas

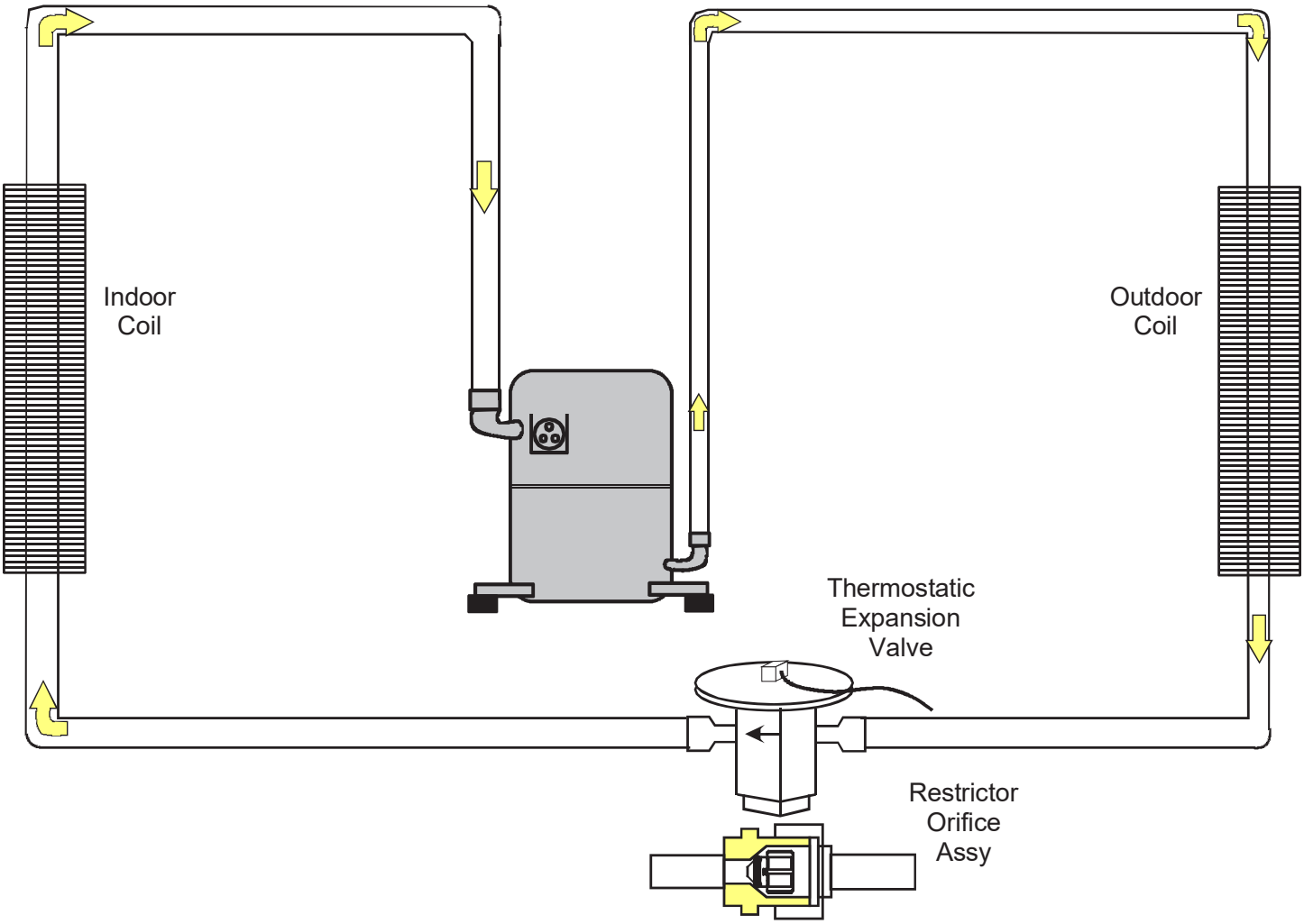

Either a thermostatic expansion valve or restrictor orifice assembly may be used depending on model, refer to the parts catalog for the model being serviced.

Restrictor Orifice Assembly in Cooling Operation

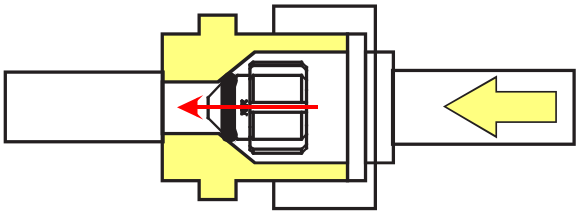

In the cooling mode the orifice is pushed into its seat forcing refrigerant to flow through the metered hole in the center of the orifice.

SERVICING TABLE OF CONTENTS

S-1 Checking Voltage....16
S-2 Checking Wiring....17
S-3 Checking Thermostat, Wiring, And Anticipator....17
S-3A Thermostat and Wiring....17
S-4 Checking Transformer and Control Circuit....18
S-7 Checking Contactor And/Or Relays....19
S-8 Checking Contactor Contacts....19
S-9 Checking Fan Relay Contacts....20
S-12 Checking High Pressure Control....20
S-13 Checking Low Pressure Control....20
S-15 Checking Capacitor....20
Testing Star Relay Kits....21
S-15B Capacitance Check (MFD)....22
S-16A Checking Fan And Blower Motor Windings (PSC Motors)....22
S-16C Checking ECM Motor Windings....22
S-16D Checking EEM Motors....23
S-17 Checking Compressor....24
S-17A Resistance Test....25
S-17B Ground Test....25
S-17D Operation Test....27
S-18 Testing crankcase heater....27
S-100 Refrigeration Repair Practice....28
S-101 Standard Pressure Test (Recommended Before System Evacuation....28
S-103 Charging....30
Superheat....31
S-104 Checking Compressor Efficiency....32
S-105B Thermostatic Expansion Valve....32
S-106 Overfeeding....32
S-107 Underfeeding....32
S-110 Checking expansion valve operation (TXV)....35
S-111 Fixed Orifice Restrictor Devices....35
S-112 Checking Restricted Liquid Line....35
S-113 Overcharge Of Refrigerant....35
S-114 Non-Condensables....36
S-115 Compressor Burnout....36
S-200 Checking External Static Pressure....37
S-201 Checking Temperature Rise....38
S-300 Testing Primary Limit Control....38
S-301 Testing Auxiliary Limit....39
S-302 Checking Flame Rollout Switch....40
S-303 Testing Inducer Motor....41
S-304 Testing Gas Valve....41
S-305 Checking Main Burners....42
S-306 Checking Orifices....42
S-307 Checking Gas Pressure....43
S-308 Checking For Delayed Ignition....44
S-309 Checking For Flashback....44
S-310 Checking Pressure Control....44
S-311 High Altitude Application....46
S-313 Testing Ignition Control Module....46
S-314 Checking Flame Sensor....48

COOLING ANALYSIS CHART

Complaint	No Cooling							Unsatisfactory Cooling					System Operating Pressures				Test Method Remedy	See Service Procedure Ref.
POSSIBLE CAUSE DOTS IN ANALYSIS GUIDE INDICATE "POSSIBLE CAUSE" SYMPTOM	System will not start	Compressor will not start - fan runs	Comp. and Cond. Fan will not start	Evaporator fan will not start	Condenser fan will not start	Compressor runs - goes off on overload	Compressor cycles on overload	System runs continuously - little cooling	Too cool and then too warm	Not cool enough on warm days	Certain areas too cool, others too warm	Compressor is noisy	Low suction pressure	Low head pressure	High suction pressure	High head pressure		
Power Failure	●																Test Voltage	S-1
Blown Fuse	●		●	●													Inspect Fuse Size & Type	S-4
Loose Connection	●			●		●											Inspect Connection - Tighten	S-2
Shorted or Broken Wires	●	●	●	●	●	●											Test Circuits With Ohmmeter	S-3
Open Overload		●		●	●												Test Continuity of Overload	S-17A
Faulty Thermostat	●			●					●	●							Test continuity of Thermostat & Wiring	S-3
Faulty Transformer	●		●														Check control circuit with voltmeter	S-4
Shorted or Open Capacitor		●			●	●											Test Capacitor	S-15
Shorted or Grounded Compressor		●				●											Test Motor Windings	S-17B
Compressor Stuck	●					●											Use Test Cord	S-17D
Faulty Compressor Contactor	●	●			●	●											Test continuity of Coil & Contacts	S-7, S-8
2nd Stage Compressor Not Energized								●		●				●	●		Test Unloader Solenoid (2 stage compressor only)	S-17C
Faulty Ignition Control				●													Test Ignition Control	S-313
Open Control Circuit				●													Test Control Circuit with Voltmeter	S-4
Low Voltage		●				●	●										Test Voltage	S-1
Faulty Evap. Fan Motor				●									●				Repair or Replace	S-16
Shorted or Grounded Fan Motor					●											●	Test Motor Windings	S-16
Improper Cooling Anticipator							●		●								Check resistance of Anticipator	S-3
Shortage of Refrigerant							●	●					●	●			Test For Leaks, Add Refrigerant	S-103
Restricted Liquid Line							●	●					●	●			Replace Restricted Part	S-112
Dirty Air Filter								●		●	●		●				Inspect Filter-Clean or Replace	
Dirty Indoor Coil								●		●	●		●				Inspect Coil - Clean	
Not enough air across Indoor Coil								●		●	●		●				Speed Blower, Check Duct Static Press	S-200
Too much air across Indoor Coil															●		Reduce Blower Speed	S-200
Overcharge of Refrigerant						●	●					●			●	●	Recover Part of Charge	S-113
Dirty Outdoor Coil						●	●			●						●	Inspect Coil - Clean	
Noncondensibles							●			●						●	Recover Charge, Evacuate, Recharge	S-114
Recirculation of Condensing Air							●			●						●	Remove Obstruction to Air Flow	
Infiltration of Outdoor Air								●		●	●						Check Windows, Doors, Vent Fans, Etc.	
Improperly Located Thermostat						●			●								Relocate Thermostat	
Air Flow Unbalanced									●		●						Readjust Air Volume Dampers	
System Undersized								●		●							Refigure Cooling Load	
Broken Internal Parts												●					Replace Compressor	
Inefficient Compressor								●						●	●		Test Compressor Efficiency	S-104
High Pressure Control Open			●														Reset And Test Control	S-12
Unbalanced Power, 3PH		●				●	●										Test Voltage	
Wrong Type Expansion Valve						●	●	●		●			●	●			Replace Valve	
Expansion Device Restricted						●	●	●		●			●	●			Remove restriction or replace expansion device	
Expansion Valve Bulb Loose												●					Tighten Bulb Bracket	
Inoperative Expansion Valve						●		●					●				Check Valve Operation	S-110
Loose Hold-down Bolts												●					Tighten Bolts	

GAS HEATING ANALYSIS CHART

Complaint	No Heat			Unsatisfactory Heat							
POSSIBLE CAUSE **DOTS IN ANALYSIS GUIDE INDICATE "POSSIBLE CAUSE"**	System Will Not Start	Burner Won't Ignite	Burner Ignites-Locks Out	Burner Shuts Off prior to T'Stat being Satisfied	Short Cycles	Long Cycles	Soot and /or Fumes	To Much Heat	Not Enough Heat	**Test Method Remedy**	**See Service Procedure Reference**
Power Failure	●									Test Voltage	S-1
Blown Fuse	●									Test Voltage	S-4
Loose Connection	●									Check Wiring	S-2
Shorted or Broken Wires	●									Check Wiring	S-3
No Low Voltage	●									Check Transformer	S-4
Faulty Thermostat	●				●	●		●		Check Thermostat	S-3
Faulty Transformer	●									Check Transformer	S-4
Poor or High Resistance Ground			●							Measure Ground Resistance	S-313
Improper Heat Anticipator Setting					●	●		●	●	Adjust Heat Anticipator Setting	S-3
Improper Thermostat Location					●	●		●	●	Relocate Thermostat	
Faulty Limit or Roll Out Switch		●		●					●	Test Control	S-300,S-301,S-302
Faulty Flame Sensor			●							Test Flame Sensor	S-314
Faulty Ignition Control	●	●	●							Test Control	S-313
Gas Valve or Gas Supply Shut Off		●								Turn Valves to On Position	S-304
Faulty Induced Draft Blower	●	●					●			Test Blower	S-303
Dirty Flame Sensor, Low uA			●							Clean Flame Sensor	S-314
Flame Sensor not in Flame, Low uA			●							Test/Adjust Position of Flame Sensor	S-314
Faulty Gas Valve		●					●		●	Replace Gas Valve	S-304
No High Stage Heat (2 Stage Only)						●			●	Check Thermostat, Control, Gas Valve	S-3,S-313,S-304
Open Auxillary Limit		●		●						Reset Control	S-301
Improper Air Flow or Distribution				●					●	Check Duct Static	
Locking out on Main Limit			●	●					●	Check Controls, Gas Press., & Temp. Rise	S-300
Delayed Ignition							●			Test for Delayed Ignition	S-308
Flashback							●			Test for Flashback	S-309
Orifice Size							●	●	●	Check Orifices	S-306
Gas Pressure		●					●	●	●	Check Gas Pressure	S-307
Cracked Heat Exchanger							●			Check Burner Flames	S-302
Stuck Gas Valve		●					●	●		Replace Gas Valve	S-304
Furnace Undersized									●	Replace with Proper Size Furnace	
Faulty Pressure Switch		●	●	●						Test Pressure Switch	S-310
Blocked or Restricted Flue							●			Check Flue/Draw down Pressure	S-310
Open Roll Out Switch		●	●							Test Control	S-302
Bouncing On Pressure Switch			●						●	Test Negative Pressure	S-310

SERVICING

S-1 Checking Voltage

WARNING

HIGH VOLTAGE
Disconnect all power before servicing or installing this unit. Multiple power sources may be present. Failure to do so may cause property damage, personal injury or death.

1. Remove doors, control panel cover, etc. from unit being tested.

With power ON:

WARNING

Line voltage now present.

2. Using a voltmeter, measure the voltage across terminals L1 and L2 of the contactor for single phase units, and L3, for 3 phase units.
3. No reading - indicates open wiring, open fuse(s) no power or etc. from unit to fused disconnect service. Repair as needed.
4. With ample voltage at line voltage connectors, energize the unit.
5. Measure the voltage with the unit starting and operating, and determine the unit Locked Rotor Voltage.
   Locked Rotor Voltage is the actual voltage available at the compressor during starting, locked rotor, or a stalled condition. Measured voltage should be above minimum listed in chart below.
   To measure Locked Rotor Voltage attach a voltmeter to the run "R" and common "C" terminals of the compressor, or to the T1 and T2 terminals of the contactor. Start the unit and allow the compressor to run for several seconds, then shut down the unit. Immediately attempt to restart the unit while measuring the Locked Rotor Voltage.
6. Voltmeter should read within the voltage tabulation as shown. If the voltage falls below the minimum voltage, check the line wire size. Long runs of undersized wire can cause low voltage. If wire size is adequate, notify the local power company in regards to either low or high voltage.

Unit Voltage

Rated Voltage	Minimum Supply Voltage	Maximum Supply Voltage
208/230V	197	253

Three phase units require a balanced 3 phase power supply to operate. If the percentage of voltage imbalance exceeds 3% the unit must not be operated until the voltage condition is corrected.

$$\text{\% Voltage Imbalance} = \frac{\text{Max. Voltage Deviation From Average Voltage}}{\text{Average Voltage}} \times 100$$

To find the percentage of imbalance, measure the incoming power supply.

L1 - L2 = 240V
L1 - L3 = 232V
L2 - L3 = 238V
Total 710V

$$\text{Avg. V} = \frac{710}{3} = \mathbf{236.7}$$

To find Max. deviation: 240 - 236.7 = +3.3
232 - 236.7 = **-4.7**
238 - 236.7 = +1.3

Max deviation was 4.7V

$$\text{\% Voltage Imbalance} = \frac{4.7}{236.7} = \mathbf{1.99\%}$$

If the percentage of imbalance had exceeded 3%, it must be determined if the imbalance is in the incoming power supply or the equipment. To do this rotate the legs of the incoming power and retest voltage as shown below.

SERVICING

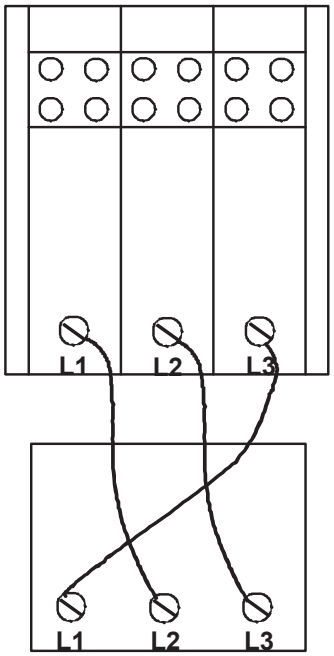

L1 - L2 = 240V
L1 - L3 = 227V
L2 - L3 = 238V

Rotate all 3 incoming legs as shown.

L1 - L2 = 227V
L1 - L3 = 238V
L2 - L3 = 240V

By the voltage readings we see that the imbalance rotated or traveled with the switching of the incoming legs. Therefore the imbalance lies within the incoming power supply.

If the imbalance had not changed then the problem would lie within the equipment. Check for current leakage, shorted motors, etc.

S-2 Checking Wiring

WARNING

HIGH VOLTAGE
Disconnect all power before servicing or installing this unit. Multiple power sources may be present. Failure to do so may cause property damage, personal injury or death.

1. Check wiring visually for signs of overheating, damaged insulation and loose connections.
2. Use an ohmmeter to check continuity of any suspected open wires.
3. If any wires must be replaced, replace with comparable gauge and insulation thickness.

BRANCH CIRCUIT AMPACITY	15	20	25	30	35	40	45	50
SUPPLY WIRE LENGTH - FEET								
200	6	4	4	4	3	3	2	2
150	8	6	6	4	4	4	3	3
100	10	8	8	6	6	6	4	4
50	14	12	10	10	8	8	6	6

Wiring Table

S-3 Checking Thermostat, Wiring

S-3A Thermostat and Wiring

Thermostat Wiring: The maximum wire length for 18 AWG thermostat wire is 100 feet.

Thermostat Wiring - Single Stage Models

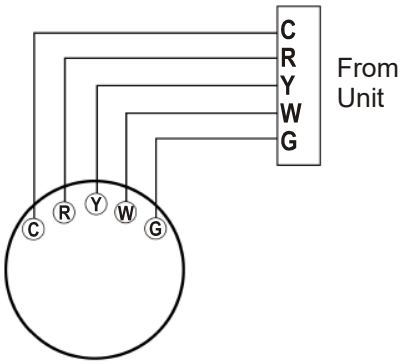

Single Stage Heating & Cooling Thermostat Diagram

Thermostat Wiring - Two Stage Models

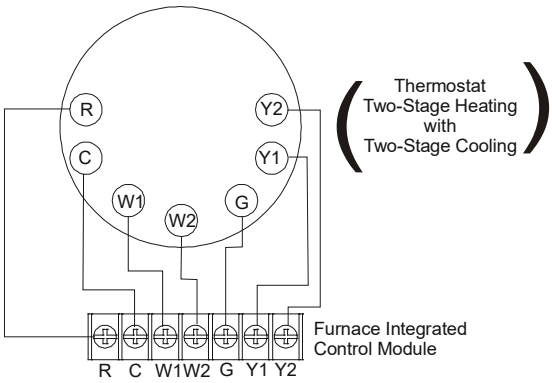

Two-Stage Heating with Two-Stage Cooling Thermostat Diagram

SERVICING

Single Stage Thermostat - Two-Stage Models

To use a single stage thermostat, move jumper located to the left of the terminal strip labeled “Stage Delay” from NONE to “5” or “10” minutes. This selection will cause the control to run on low stage for the selected time (5 or 10 minutes) then shift to HIGH STAGE. This option controls both cooling and heating modes. If the jumper is not moved, only low-stage cool and low-stage heat will operate.

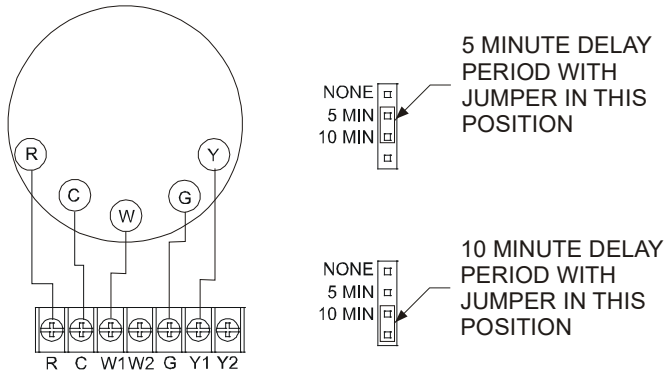

Two-Stage Heating (Timed) and Two-Stage Cooling (timed) with Single Stage Thermostat Diagram

NOTE: DP5GM[60]*41 models have a low voltage terminal block for thermostat connections.**

DP5GM(60)*41 Low Voltage Terminal Block Wiring**

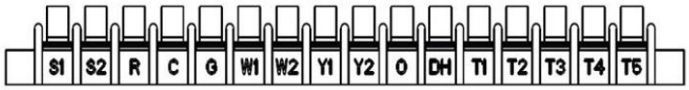

R - 24VAC Power
C - 24 VAC Common
G - Blower
O - Reversing valve
W1 - 1st Stage Heat
W2 - 2nd Stage Heat
NOTE: Remove jumper between W1 and W2 to utilize both stages of heat independently.
Y1 - 1st Stage Cooling
Y2 - 2nd Stage Cooling

T1 - T5 - Speed taps used for the **5-ton direct drive EEM** motors only. Power in will land on only 2 of the 5.
NOTE: If the unit is equipped with factory installed smoke detectors, the red jumper between S1 and S2 will not be present.
S1 and S2 are connected between the smoke detector terminals to break the red low voltage transformer wire.

WARNING

Line voltage now present.

With power ON, thermostat calling for cooling

1. Use a voltmeter to check for 24 volts at thermostat wires C and Y in the condensing unit control panel.
2. No voltage indicates trouble in the thermostat, wiring or external transformer source.
3. Check the continuity of the thermostat and wiring. Repair or replace as necessary.

Indoor Blower Motor

With power ON:

WARNING

Line voltage now present.

1. Set fan selector switch at thermostat to “ON” position.
2. With voltmeter, check for 24 volts at wires C and G.
3. No voltage indicates the trouble is in the thermostat or wiring.
4. Check the continuity of the thermostat and wiring. Repair or replace as necessary.

S-4 Checking Transformer and Control Circuit

WARNING

HIGH VOLTAGE
Disconnect all power before servicing or installing this unit. Multiple power sources may be present. Failure to do so may cause property damage, personal injury or death.

A step-down transformer (208/240 volt primary to 24 volt secondary) is provided with each indoor unit. This allows ample capacity for use with resistance heaters. The outdoor sections do not contain a transformer.

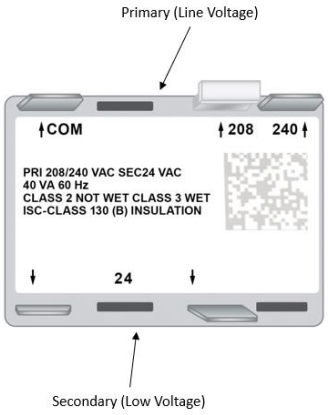

SERVICING

WARNING

Disconnect ALL power before servicing.

1. Remove control panel cover, or etc., to gain access to transformer.

With power ON:

WARNING

Line voltage now present.

2. Using a voltmeter, check voltage across secondary voltage side of transformer (R to C).
3. No voltage indicates faulty transformer, bad wiring, or bad splices.
4. Check transformer primary voltage at incoming line voltage connections and/or splices.
5. If line voltage available at primary voltage side of transformer and wiring and splices good, transformer is inoperative. Replace.

S-7 Checking Contactor And/Or Relays

WARNING

HIGH VOLTAGE
Disconnect all power before servicing or installing this unit. Multiple power sources may be present. Failure to do so may cause property damage, personal injury or death.

The compressor contactor and other relay holding coils are wired into the low or line voltage circuits. When the control circuit is energized, the coil pulls in the normally open contacts or opens the normally closed contacts. When the coil is de-energized, springs return the contacts to their normal position.

NOTE: Most single phase contactors break only one side of the line (L1), leaving 115 volts to ground present at most internal components.

1. Remove the leads from the holding coil.
2. Using an ohmmeter, test across the coil terminals.

If the coil does not test continuous, replace the relay or contactor.

S-8 Checking Contactor Contacts

Single Phase

WARNING

HIGH VOLTAGE
Disconnect all power before servicing or installing this unit. Multiple power sources may be present. Failure to do so may cause property damage, personal injury or death.

1. Disconnect the wire leads from the terminal (T) side of the contactor.
2. With power ON, energize the contactor.

WARNING

Line voltage now present.

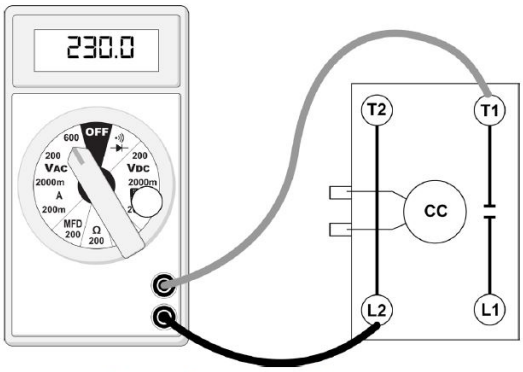

Testing Compressor Contactor (Single Phase)

3. Using a voltmeter, test across terminals.
   a. L1 - L2 - No voltage. Check breaker or fuses on main power supply.
   b. T1 to T2 - Meter should read the same as L1 to L2 in step A. If voltage readings are not the same as step A, replace contactor.

If a no voltage reading is obtained - replace the contactor.

Three Phase

Using a voltmeter, test across terminals.

a. L1-L2, L1-L3, and L2-L3 - If voltage is present, proceed to B. If voltage is not present, check breaker or fuses on main power supply.
b. T1-T2, T1-T3, and T2-T3 - If voltage readings are not the same as in “A”, replace contactor.

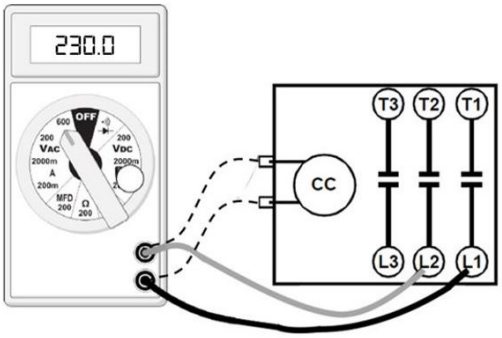

Testing Compressor Contactor (Three Phase)

S-9 Checking Fan Relay Contacts

The fan relays are incorporated into the control board. See section S-313 for checking control board.

S-12 Checking High Pressure Control

WARNING

HIGH VOLTAGE
Disconnect all power before servicing or installing this unit. Multiple power sources may be present. Failure to do so may cause property damage, personal injury or death.

The high pressure control senses the pressure in the liquid line. If abnormally high condensing pressures develop, the contacts of the control open, breaking the control circuit before the compressor motor overloads. This control is automatically reset.

1. Using an ohmmeter, check across terminals of high pressure control, with wire removed. If not continuous, the contacts are open.
2. Attach a gauge to the dill valve port on the base valve.

With power ON:

WARNING

Line voltage now present.

3. Start the system and place a piece of cardboard in front of the condenser coil, raising the condensing pressure.
4. Check pressure at which the high pressure control cuts-out.

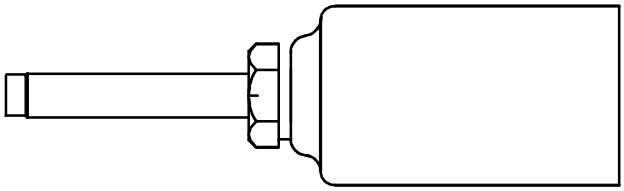

If it cuts-out at 660 PSIG ± 10 PSIG, it is operating normally (See causes for high head pressure in Service Problem Analysis Guide). If it cuts out below this pressure range, replace the control. The control should reset at 420 PSIG ± 25 PSIG.

S-13 Checking Low Pressure Control

The low pressure control senses the pressure in the suction line and will open its contacts on a drop in pressure. The low pressure control will automatically reset itself with a rise in pressure.

The low pressure control is designed to cut-out (open) at approximately 7 PSIG ± 3 PSIG. It will automatically cut-in (close) at approximately 25 PSIG ± 5 PSIG.

Test for continuity using a VOM and if not as above, replace the control.

S-15 Checking Capacitor

Capacitor, Run

A run capacitor is wired across the auxiliary and main windings of a single phase permanent split capacitor motor. The capacitors primary function is to reduce the line current while greatly improving the torque characteristics of a motor. This is accomplished by using the 90° phase relationship between the capacitor current and voltage in conjunction with the motor windings so that the motor will give two phase operation when connected to a single phase circuit. The capacitor also reduces the line current to the motor by improving the power factor.

Capacitor, Start
Scroll Compressor Models

Hard start components are not required on Scroll compressor equipped units due to a non-replaceable check valve located in the discharge line of the compressor. However hard start kits are available and may improve low voltage starting characteristics.

SERVICING

This check valve closes off high side pressure to the compressor after shut down allowing equalization through the scroll flanks. Equalization requires only about one or two seconds during which time the compressor may turn backwards.

Your unit comes with a 180-second anti-short cycle to prevent the compressor from starting and running backwards.

Models Equipped With A Hard Start Device
A start capacitor is wired in parallel with the run capacitor to increase the starting torque. The start capacitor is of the electrolytic type, rather than metallized polypropylene as used in the run capacitor.

A switching device must be wired in series with the capacitor to remove it from the electrical circuit after the compressor starts to run. Not removing the start capacitor will overheat the capacitor and burn out the compressor windings.

These capacitors have a 15,000 ohm, 2 watt resistor wired across its terminals. The object of the resistor is to discharge the capacitor under certain operating conditions, rather than having it discharge across the closing of the contacts within the switching device such as the Start Relay, and to reduce the chance of shock to the servicer. See the Servicing Section for specific information concerning capacitors.

Relay, Start
A potential or voltage type relay is used to take the start capacitor out of the circuit once the motor comes up to speed. This type of relay is position sensitive. The normally closed contacts are wired in series with the start capacitor and the relay holding coil is wired parallel with the start winding. As the motor starts and comes up to speed, the increase in voltage across the start winding will energize the start relay holding coil and open the contacts to the start capacitor.

TESTING START RELAY KITS

Testing Coil Relay

1. Disconnect power to unit.
2. Disconnect all wiring.
3. Measure the resistance of the coil between terminals 2 & 5.
4. If the coil reads open or shorted, replace the relay.

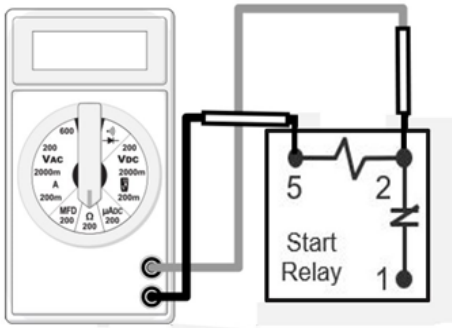

Testing Start Relay Coil Resistance

Testing Relay Contacts

Testing Contacts Resistance

a. Disconnect power to unit.
b. Disconnect all wiring to the start relay.
c. Measure the resistance of the contacts between terminals 1 & 2.
d. If the contacts read open, replace the relay.

Testing Contacts Voltage

a. With power on, provide a call for cool to energize the compressor.
b. With the compressor running, use a voltmeter to measure the voltage between terminals 1 & 2.
c. Voltage reading of zero indicates that the relay's contacts are stuck, replace the relay.

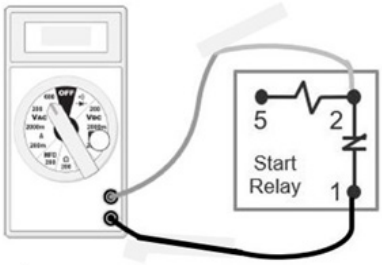

Testing Start Relay Contacts

WARNING

HIGH VOLTAGE
Disconnect all power before servicing or installing this unit. Multiple power sources may be present. Failure to do so may cause property damage, personal injury or death.

SERVICING

WARNING

Discharge capacitor through a 20 to 30 OHM resistor before handling.

S-15B Capacitance Check (MFD)

1. Turn power off to unit
2. Discharge capacitor through a 20Ω - 30Ω resistor
3. Remove wires from capacitor
4. Use multi-meter check micro-farads (MFD) of the capacitor.
5. Place leads from C – HERM
6. Place leads from C – FAN
7. Compare to capacitor rating label.

   If the reading is within the tolerance listed on rating label the capacitor is good. If the reading is lower, the capacitor is bad and must be replaced.

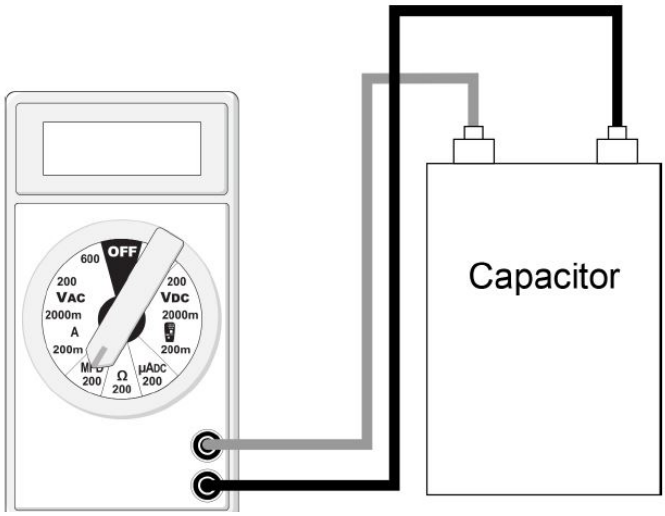

Testing Capacitance

WARNING

Discharge capacitor through a 20 to 30 OHM resistor before handling.

S-16A Checking Fan And Blower Motor Windings (PSC Motors)

The auto reset fan motor overload is designed to protect the motor against high temperature and high amperage conditions by breaking the common circuit within the motor, similar to the compressor internal overload. However, heat generated within the motor is faster to dissipate than the compressor, allow at least 45 minutes for the overload to reset, then retest.

WARNING

HIGH VOLTAGE
Disconnect all power before servicing or installing this unit. Multiple power sources may be present. Failure to do so may cause property damage, personal injury or death.

1. Remove the motor leads from its respective connection points and capacitor (if applicable).
2. Check the continuity between each of the motor leads.
3. Touch one probe of the ohmmeter to the motor frame (ground) and the other probe in turn to each lead.

If the windings do not test continuous or a reading is obtained from lead to ground, replace the motor.

S-16C Checking ECM Motor Windings

WARNING

HIGH VOLTAGE
Disconnect all power before servicing or installing this unit. Multiple power sources may be present. Failure to do so may cause property damage, personal injury or death.

1. Disconnect the 5-pin and the 16-pin connectors from the ECM power head.
2. Remove the 2 screws securing the ECM power head and separate it from the motor.
3. Disconnect the 3-pin motor connector from the power head and lay it aside.
4. Using an ohmmeter, check the motor windings for continuity to ground (pins to motor shell). If the ohmmeter indicates continuity to ground, the motor is defective and must be replaced.
5. Using an ohmmeter, check the windings for continuity (pin to pin). If no continuity is indicated, the thermal limit (over load) device may be open. Allow motor to cool and retest.

SERVICING

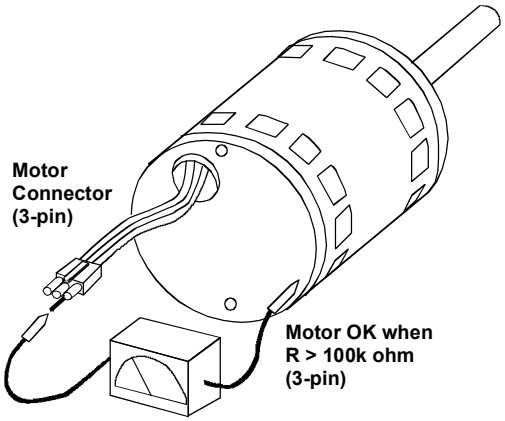

WINDING TEST

S-16D CHECKING EEM MOTORS

The EEM motor is a one piece, fully encapsulated, 3 phase brushless DC (single phase AC input) motor with ball bearing construction. The EEM motor features an integral control module.

1. Using a voltmeter, check for 230 volts to the motor connections L and N. If 230 volts is present, proceed to step 2. If 230 volts is not present, check the line voltage circuit to the motor.
2. Using a voltmeter, check for 24 volts from terminal C to either terminal 1, 2, 3, 4, or 5, depending on which tap is being used, at the motor. If voltage present, proceed to step 3. If no voltage, check 24 volt circuit to motor.
3. If voltage was present in steps 1 and 2, the motor has failed and will need to be replaced.

NOTE: When replacing motor, ensure the belly band is between the vents on the motor and the wiring has the proper drip loop to prevent condensate from entering the motor.

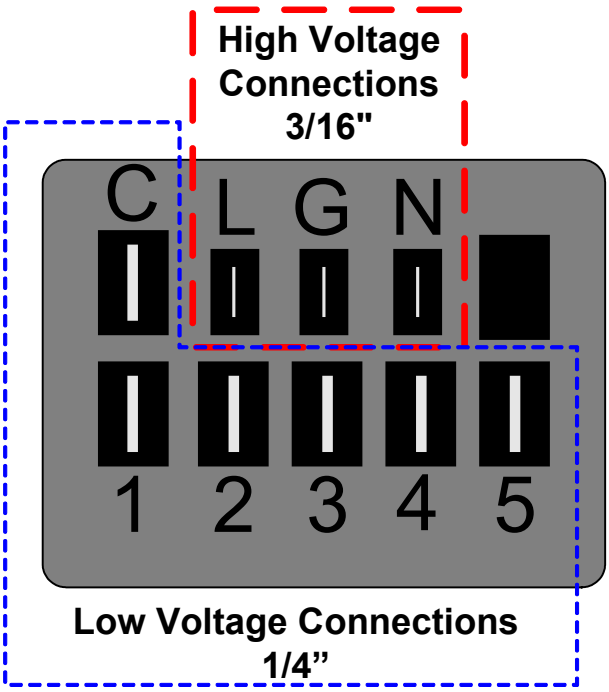

EEM MOTOR CONNECTIONS

CHECKING ECM MOTORS

An ECM is an *Electronically Commutated Motor* which offers many significant advantages over PSC motors. The ECM has near zero rotor loss, synchronous machine operation, variable speed, low noise, and programmable air flow. Because of the sophisticated electronics within the ECM motor, some technicians are intimated by the ECM motor; however, these fears are unfounded. GE/ Regal Beloit offers two ECM motor testers, and with a VOM meter, one can easily perform basic troubleshooting on ECM motors. An ECM motor requires power (line voltage) and a signal (24 volts) to operate. The ECM motor stator contains permanent magnet. As a result, the shaft feels “rough” when turned by hand. This is a characteristic of the motor, not an indication of defective bearings.

WARNING

LINE VOLTAGE NOW PRESENT.

1. Disconnect the 5-pin connector from the motor.
2. Using a volt meter, check for line voltage at terminals #4 & #5 at the power connector. If no voltage is present:
3. Check the unit for incoming power.
4. Check the control board.

5. If line voltage is present, reinsert the 5-pin connector and remove the 16-pin connector.
6. Check for signal (24 volts) at the transformer.
7. Check for signal (24 volts) from the thermostat to the "G" terminal at the 16-pin connector.
8. Using an ohmmeter, check for continuity from the #1 & #3 (common pins) to the transformer neutral or "C" thermostat terminal. If you do not have continuity, the motor may function erratically. Trace the common circuits, locate and repair the open neutral.
9. Set the thermostat to "Fan-On". Using a voltmeter, check for 24 volts between pin #15 (G) and common.
10. Disconnect power to compressor. Set thermostat to call for cooling. Using a voltmeter, check for 24 volts at pin #6 and or #14.
11. Set the thermostat to a call for heating. Using a voltmeter, check for 24 volts at pin #2 and/or #11.

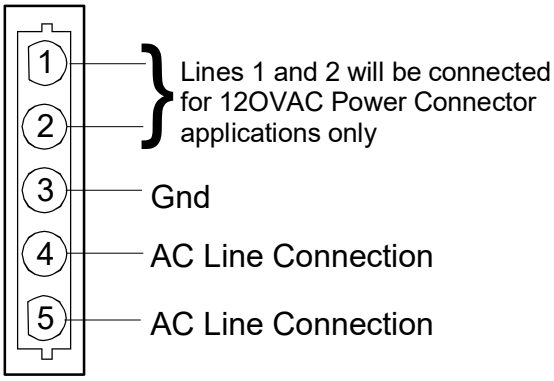

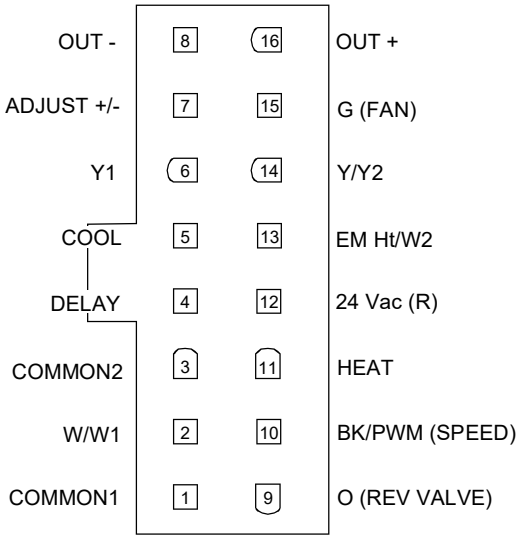

16-PIN ECM HARNESS CONNECTOR

If you do not read voltage and continuity as described, the problem is in the control or interface board, but not the motor. If you register voltage as described, the ECM power head is defective and must be replaced.

Checking ECM Motor Windings

WARNING

High Voltage!
Disconnect all power before servicing or installing. Multiple power sources may be present. Failure to do so may cause property damage, personal injury or death.

1. Disconnect the 5-pin and the 16-pin connectors from the ECM power head.
2. Remove the 2 screws securing the ECM power head and separate it from the motor.
3. Disconnect the 3-pin motor connector from the power head and lay it aside.
4. Using an ohmmeter, check the motor windings for continuity to ground (pins to motor shell). If the ohmmeter indicates continuity to ground, the motor is defective and must be replaced.
5. Using an ohmmeter, check the windings for continuity (pin to pin). If no continuity is indicated, the thermal limit (over load) device may be open. Allow motor to cool and retest.

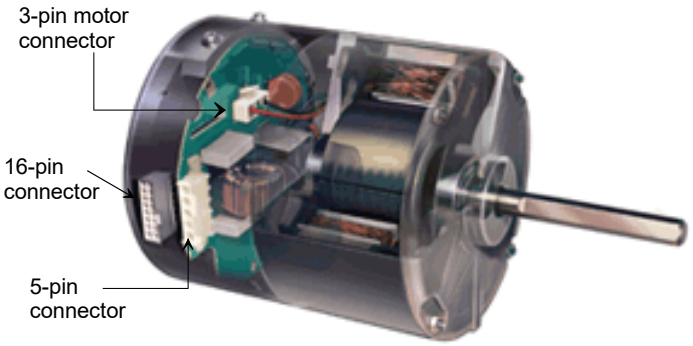

S-17 Checking Compressor

WARNING

Hermetic compressor electrical terminal venting can be dangerous. When insulating material which supports a hermetic compressor or electrical terminal suddenly disintegrates due to physical abuse or as a result of an electrical short between the terminal and the compressor housing, the terminal may be expelled, venting the vapor and liquid contents of the compressor housing and system.

SERVICING

If the compressor terminal PROTECTIVE COVER and gasket (if required) are not properly in place and secured, there is a remote possibility if a terminal vents, that the vaporous and liquid discharge can be ignited, spouting flames several feet, causing potentially severe or fatal injury to anyone in its path.

This discharge can be ignited external to the compressor if the terminal cover is not properly in place and if the discharge impinges on a sufficient heat source.

Ignition of the discharge can also occur at the venting terminal or inside the compressor, if there is sufficient contaminant air present in the system and an electrical arc occurs as the terminal vents.

Ignition cannot occur at the venting terminal without the presence of contaminant air, and cannot occur externally from the venting terminal without the presence of an external ignition source.

Therefore, proper evacuation of a hermetic system is essential at the time of manufacture and during servicing.

To reduce the possibility of external ignition, all open flame, electrical power, and other heat sources should be extinguished or turned off prior to servicing a system.

S-17A Resistance Test

Each compressor is equipped with an internal overload.

The line break internal overload senses both motor amperage and winding temperature. High motor temperature or amperage heats the disc causing it to open, breaking the common circuit within the compressor on single phase units.

Heat generated within the compressor shell, usually due to recycling of the motor, high amperage or insufficient gas to cool the motor, is slow to dissipate. Allow at least three to four hours for it to cool and reset, then retest.

Fuse, circuit breaker, ground fault protective device, etc. has not tripped -

WARNING

HIGH VOLTAGE
Disconnect all power before servicing or installing this unit. Multiple power sources may be present. Failure to do so may cause property damage, personal injury or death.

1. Remove the leads from the compressor terminals.

WARNING

See warnings S-17 before removing compressor terminal cover.

2. Using an ohmmeter, test continuity between terminals S-R, C-R, and C-S, on single phase units or terminals T1, T2 and T3, on 3 phase units.

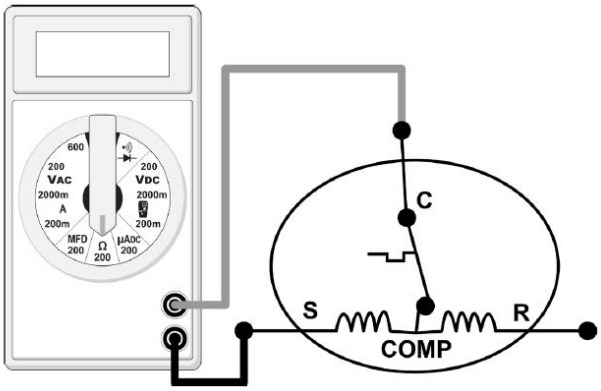

Testing Compressor Windings

If either winding does not test continuous, replace the compressor.

NOTE: If an open compressor is indicated, allow ample time for the internal overload to reset before replacing compressor.

S-17B Ground Test

If fuse, circuit breaker, ground fault protective device, etc., has tripped, this is a strong indication that an electrical problem exists and must be found and corrected. The circuit protective device rating must be checked, and its maximum rating should coincide with that marked on the equipment nameplate.

SERVICING

With the terminal protective cover in place, it is acceptable to replace the fuse or reset the circuit breaker ONE TIME ONLY to see if it was just a nuisance opening. If it opens again, DO NOT continue to reset.

WARNING

Disconnect all power before servicing.

Disconnect all power to unit, making sure that all power legs are open.

1. Carefully remove the compressor terminal protective cover and inspect for loose leads or insulation breaks in the lead wires.
2. Disconnect the three leads going to the compressor terminals at the compressor or nearest point to the compressor.
3. Check for a ground separately between each of the three terminals and ground (such as an unpainted tube on the compressor). If there is any reading of continuity to ground on the meter, the compressor should be considered defective.
4. If ground is indicated, replace the compressor.

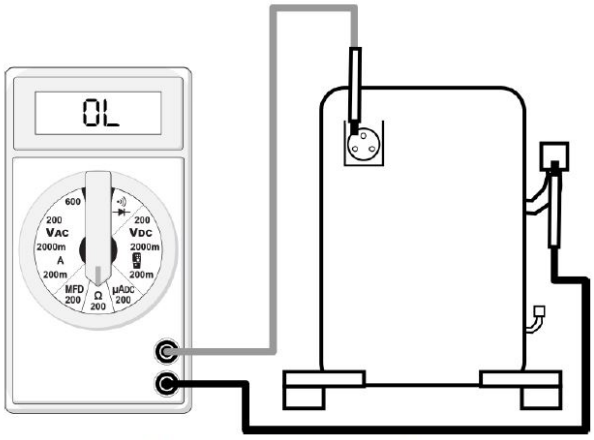

Compressor Ground Test

WARNING

Damage can occur to the glass embedded terminals if the leads are not properly removed. This can result in terminal and hot oil discharging.

Unloader Test Procedure (2 Stage Compressor Only)

A nominal 24-volt direct current coil activates the compressor internal unloader solenoid. The input control circuit voltage must be 18 to 28 volt ac (remove). The coil power requirement is 5 VA. The external electrical connection is made with a molded plug assembly. This plug contains a full wave rectifier to supply direct current to the unloader coil. The measured DC voltage at the connectors in the plug should be 15 to 27 volt dc.

Unloader Test Procedure

If it is suspected that the unloader is not working, the following methods may be used to verify operation.

1. Operate the system and measure compressor amperage. Cycle the unloader ON and OFF at 10 second intervals. The compressor amperage should increase when switching from part-load to full-load and decrease when switching from full-load to part-load. The percent change depends on the operating conditions and voltage, but should be at least 25 percent.
2. If step one does not give the expected results, shut unit off. Apply 18 to 28 volt ac to the unloader molded plug leads and listen for a click as the solenoid pulls in. Remove power and listen for another click as the unloader returns to its original position.
3. If clicks can't be heard, shut off power to the unit and remove the control circuit molded plug from the compressor and measure the unloader coil resistance (connections on the compressor). The solenoid coil should have continuity and not be grounded or have infinite resistance. If the coil resistance is infinite, zero, or grounded, the compressor must be replaced.
4. Next check the molded plug.
   a. Voltage check: Apply control voltage to the plug wires (18 to 28 volt ac). The measured dc voltage at the female connectors in the plug should be around 15 to 27 vdc.
   b. Resistance check: Measure the resistance from the end of one molded plug lead to either of the two female connectors in the plug. One of the connectors should read close to zero ohms while the other should read infinity. Repeat with other wire. The same female connector as before should read zero while the other connector again reads infinity. Reverse polarity on the ohmmeter leads and repeat. The female connector that read infinity previously should now read close to zero ohms.
   c. Replace plug if either of these test methods doesn't show the desired results.

SERVICING

Operation Test

If the voltage, capacitor, overload and motor winding test fail to show the cause for failure:

WARNING

High Voltage!
Disconnect all power before servicing or installing. Multiple power sources may be present. Failure to do so may cause property damage, personal injury or death.

1. Remove unit wiring from disconnect switch and wire a test cord to the disconnect switch.

NOTE: The wire size of the test cord must equal the line wire size and the fuse must be of the proper size and type.

2. With the protective terminal cover in place, use the three leads to the compressor terminals that were disconnected at the nearest point to the compressor and connect the common, start and run clips to the respective leads.
3. Connect good capacitors of the right MFD and voltage rating into the circuit as shown.
4. With power ON, close the switch.

WARNING

Line voltage now present.

a. If the compressor starts and continues to run, the cause for failure is somewhere else in the system.
b. If the compressor fails to start - replace.

Locked Rotor Test

If fuse, circuit breaker, ground fault protective device, etc. has tripped, this is a strong indication that an electrical problem exists and must be found and corrected. The circuit protective device rating must be checked and its maximum rating should coincide with that marked on the equipment nameplate.

Before checking for locked rotor, the compressor terminals should be checked for open windings (see Resistance Test) and the run capacitor and start capacitor (if used) should be checked thoroughly (see Checking Capacitor).

S-17D Operation Test

If the voltage, capacitor, overload and motor winding test fail to show the cause for failure:

WARNING

HIGH VOLTAGE
Disconnect all power before servicing or installing this unit. Multiple power sources may be present. Failure to do so may cause property damage, personal injury or death.

1. Remove unit wiring from disconnect switch and wire a test cord to the disconnect switch.

NOTE: The wire size of the test cord must equal the line wire size and the fuse must be of the proper size and type.

2. With the protective terminal cover in place, use the three leads to the compressor terminals that were disconnected at the nearest point to the compressor and connect the common, start and run clips to the respective leads.
3. Connect good capacitors of the right MFD and voltage rating into the circuit as shown.
4. With power ON, close the switch.

WARNING

Line voltage now present.

a. If the compressor starts and continues to run, the cause for failure is somewhere else in the system.
b. If the compressor fails to start - replace.

S-18 Testing crankcase heater (Optional Item)

The crankcase heater must be energized a minimum of four (4) hours before the unit is operated.

Crankcase heaters are used to prevent migration or accumulation of refrigerant in the compressor crankcase during the off cycles and prevents liquid slugging or oil pumping on start up.

SERVICING

A crankcase heater will not prevent compressor damage due to a floodback or over charge condition.

WARNING

Disconnect All power before servicing.

1. Disconnect the heater lead in wires.
2. Using an ohmmeter, check heater continuity - should test continuous. If not, replace.

S-100 Refrigeration Repair Practice

DANGER

Always remove the refrigerant charge in a proper manner before applying heat to the system.

When repairing the refrigeration system:

WARNING

Disconnect All power before servicing.

1. Never open a system that is under vacuum. Air and moisture will be drawn in.
2. Plug or cap all openings.
3. Remove all burrs and clean the brazing surfaces of the tubing with sand cloth or paper. Brazing materials do not flow well on oxidized or oily surfaces.
4. Clean the inside of all new tubing to remove oils and pipe chips.
5. When brazing, sweep the tubing with dry nitrogen to prevent the formation of oxides on the inside surfaces.
6. Complete any repair by replacing the liquid line drier in the system, evacuate and charge.

BRAZING MATERIALS

Copper to Copper Joints - Sil-Fos used without flux (alloy of 15% silver, 80% copper, and 5% phosphorous). Recommended heat 1400°F.

Copper to Steel Joints - Silver Solder used without a flux (alloy of 30% silver, 38% copper, 32% zinc). Recommended heat - 1200°F.

Aluminum to Aluminum & Copper to Aluminum Joints – ZA-1 Brazing Rods use Flux System Cesium-Based Polymer System (alloy of 78% Zinc and 22% Aluminum). Melting point 826°F Flow point 905°F.

S-101 Standing Pressure Test (Recommended Before System Evacuation)

WARNING

To avoid the risk of fire or explosion, never use oxygen, high pressure air or flammable gases for leak testing of a refrigeration system.

WARNING

To avoid possible explosion, the line from the nitrogen cylinder must include a pressure regulator and a pressure relief valve. The pressure relief valve must be set to open at no more than 450 psig.

Using dry nitrogen, pressurize the system to 450 PSIG. Allow the pressure to stabilize and hold for 15 minutes (minimum). If the pressure does not drop below 450 PSIG, the system is considered leak free. Proceed to system evacuation using the Deep Vacuum Method. If after 15 minutes the pressure drops below 450 PSIG, follow the procedure outlined below to identify system leaks. Repeat the Standing Pressure Test.

Leak Testing (nitrogen or nitrogen-traced)

WARNING

To avoid the risk of fire or explosion, never use oxygen, high pressure air or flammable gases for leak testing of a refrigeration system.

WARNING

To avoid possible explosion, the line from the nitrogen cylinder must include a pressure regulator and a pressure relief valve. The pressure relief valve must be set to open at no more than 450 psig.

SERVICING

Leak test the system using dry nitrogen and soapy water to identify leaks. If you prefer to use an electronic leak detector, charge the system to 10 PSIG with the appropriate system refrigerant (See Serial Data Plate for refrigerant identification). Using dry nitrogen, finish charging the system to 450 PSIG. Apply the leak detector to all suspect areas. When leaks are discovered, repair the leaks, and repeat the pressure test. If leaks have been eliminated proceed to system evacuation.

System Evacuation

Condensing unit liquid and suction valves are closed to contain the charge within the unit. The unit is shipped with the valve stems closed and caps installed. Do not open valves until the system is evacuated.

WARNING

REFRIGERANT UNDER PRESSURE!
Failure to follow proper procedures may cause property damage, personal injury or death.

NOTE: Scroll compressors should never be used to evacuate or pump down a heat pump or air conditioning system.

CAUTION

Prolonged operation at suction pressures less than 20 PSIG for more than 5 seconds will result in overheating of the scrolls and permanent damage to the scroll tips, drive bearings and internal seal.

WARNING

Do not front seat the service valve(s) with the compressor open, with the suction line of the compressor closed or severely restricted.

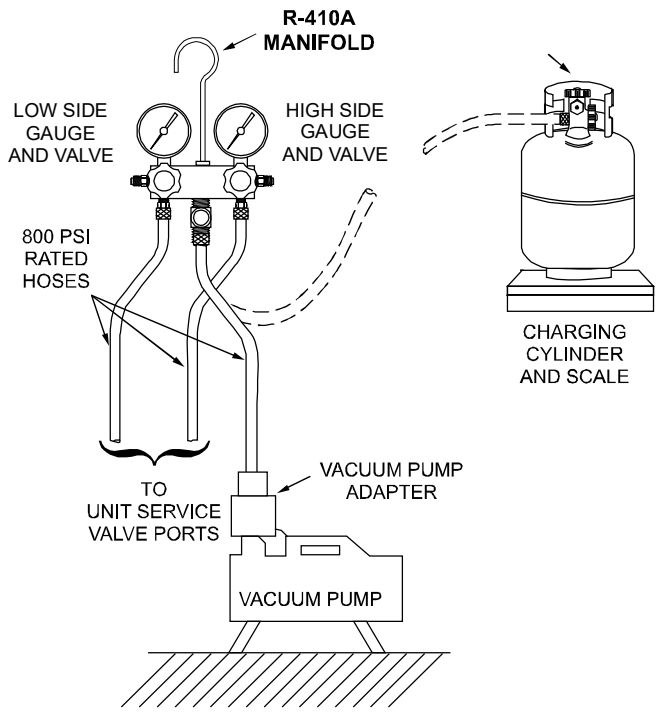

Evacuation

Deep Vacuum Method (Recommended)

The Deep Vacuum Method requires a vacuum pump rated for 500 microns or less. This method is an effective and efficient way of assuring the system is free of non-condensable air and moisture. As an alternative, the Triple Evacuation Method is detailed in the Service Manual for this product model.

It is recommended to remove the Schrader Cores from the service valves using a core-removal tool to expedite the evacuation procedure.

1. Connect the vacuum pump, micron gauge, and vacuum rated hoses to both service valves. Evacuation must use both service valves to eliminate system mechanical seals.
2. Evacuate the system to less than 500 microns.
3. Isolate the pump from the system and hold vacuum for 10 minutes (minimum). Typically, pressure will rise slowly during this period. If the pressure rises to less than 1000 microns and remains steady, the system is considered leak-free; proceed to system charging and startup.
4. If pressure rises above 1000 microns but holds steady below 2000 microns, non-condensable air or moisture may remain or small leak is present. Return to step 2: If the same result is achieved, check for leaks and repair. Repeat the evacuation procedure.

5. If pressure rises above 2000 microns, a leak is present. Check for leaks and repair. Repeat the evacuation procedure.

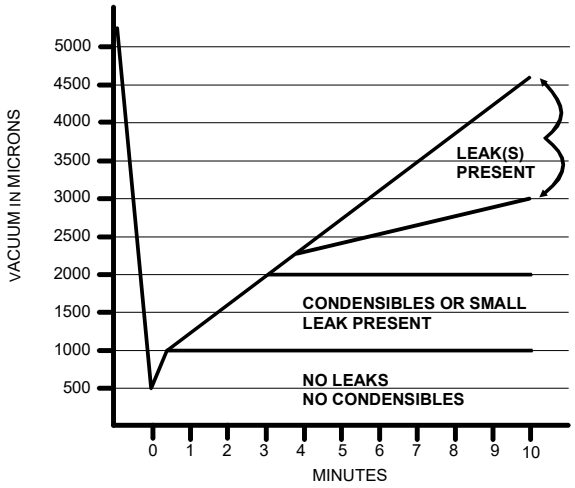

Triple Evacuation Method (Alternate)

1. Evacuate the system to 4000 microns and hold for 15 minutes. Break the vacuum with dry nitrogen, bring the system pressure to 2-3 PSIG, and hold for 20 minutes. Release the nitrogen,
2. Evacuate to 1500 microns and hold for 20 minutes. Break the vacuum with dry nitrogen again, bring the system pressure back to 2-3 PSIG, and hold for 20 minutes.
3. Evacuate the system to 500 microns and hold for 60 minutes.
4. If the pressure rises to 1000 microns or less and remains steady the system is considered leak free; proceed to start-up.

S-103 Charging

WARNING

Refrigerant under pressure!
- **Do not overcharge system with refrigerant.**
- **Do not operate unit in a vacuum or at negative pressure.**

Failure to follow proper procedures may cause property damage, personal injury or death.

CAUTION

Damage to the unit caused by operating the compressor or with the suction valve closed is not covered under the warranty and may cause serious compressor damage.

CAUTION

Only use refrigerant certified to AHRI standards. Used refrigerant may cause compressor damage. The manufacturer is not responsible for damage or the need for repairs resulting from the use of unapproved refrigerant types or used or recycled refrigerant. Most portable machines cannot clean used refrigerant to meed AHRI standards.

Charge the system with the exact amount of refrigerant.

See the unit nameplate for the correct refrigerant charge amount.

An inaccurately charged system will cause future problems.

1. Using a charging scale, weigh in the refrigerant charge amount listed on unit nameplate. Allow liquid refrigerant only to enter the high side.
2. After the system will take all it will take, close the valve on the high side of the charging manifold.
3. Start the system and charge the balance of the refrigerant through the low side.

NOTE: R410A should be drawn out of the storage container or drum in liquid form due to its fractionation properties, but should be "Flashed" to its gas state before entering the system. There are commercially available restriction devices that fit into the system charging hose set to accomplish this. DO NOT charge liquid R410A into the compressor.

4. With the system still running, close the valve on the charging cylinder. At this time, you may still have some liquid refrigerant in the charging cylinder hose and will definitely have liquid in the liquid hose. Reseat the liquid line core. Slowly open the high side manifold valve and transfer the liquid refrigerant from the liquid line hose and charging cylinder hose into the suction service valve port. **CAREFUL**: Watch so that liquid refrigerant does not enter the compressor.

Due to their design, Scroll compressors are inherently more tolerant of liquid refrigerant.

Refrigerant Charge Check (Units with Fixed Orifice Devices)

After completing airflow measurements and adjustments the unit's refrigerant charge must be checked. All package units with fixed orifice devices are charged using the super heat method at the compressor suction line.

SERVICING

After superheat is adjusted it is recommended to check unit subcooling at the condenser coil liquid line out.

Superheat

Before checking the superheat or replacing the valve, perform all the procedures outlined under Air Flow, Refrigerant Charge, Expansion Valve - Overfeeding, Underfeeding. These are the most common causes for evaporator malfunction.

Checking Superheat

Refrigerant gas is considered superheated when its temperature is higher than the saturation temperature corresponding to its pressure. The degree of superheat equals the degrees of temperature increase above the saturation temperature at existing pressure.

Procedure:

1. Run system at least 15 -20 minutes to allow pressure to stabilize.
2. Install a low side pressure gauge on the suction line access fitting.
3. Temporarily install thermometer on suction (large) line near compressor with adequate contact and insulate for best possible reading.
4. Record the gauge pressure corresponding temperature and the temperature of the suction line.
5. Refer to the superheat table for proper system superheat. Add charge to lower superheat recover charge to raise superheat.

Ambient Condenser Inlet Temp (°F Drybulb)	Return Air Temp. (°F Drybulb)				
	65	70	75	80	85
100	-	-	-	10	10
95	-	-	10	10	10
90	-	-	12	15	18
85	-	10	13	17	20
80	-	10	15	21	26
75	10	13	17	25	29
70	10	17	20	28	32
65	13	19	26	32	35
60	17	25	30	33	37

Superheat Table

EXAMPLE:

a. Suction Pressure = 143
b. Corresponding Temp. °F. = 50
c. Thermometer on Suction Line = 59°F

To obtain the degrees temperature of superheat, subtract 50.0 from 59.0°F. The difference is 9° Superheat. The 9° Superheat would fall in the ± range of allowable superheat.

SUPERHEAT = SUCTION LINE TEMP - SAT. SUCTION TEMP.

(Units with TXV Devices)

All package units with TXV devices are charged using the SUBCOOLING method at the liquid line. After subcooling is checked it is recommended to check unit superheat at the evaporator coil suction line.

Checking Subcooling

Refrigerant liquid is considered subcooled when its temperature is lower than the saturation temperature corresponding to its pressure. The degree of subcooling equals the degrees of temperature decrease below the saturation temperature at the existing pressure.

Procedure:

1. Attach an accurate thermometer or preferably a thermocouple type temperature tester to the liquid line close to the pressure switch.
2. Install a high side pressure gauge on the liquid access fitting.
3. Record the gauge pressure and the temperature of the line.
4. The difference between the thermometer reading and pressure to temperature conversion is the amount of subcooling.

SUBCOOLING FORMULA = SAT. LIQUID TEMP. - LIQUID LINE TEMP.

EXAMPLE:

a. Liquid Line Pressure = 417
b. Corresponding Temp. °F. = 120°
c. Thermometer on Liquid line = 109°F.
To obtain the amount of subcooling, subtract 109°F from 120°F. The difference is 11° subcooling. See the specification sheet or technical information manual for the design subcooling range for your unit.

See R410A Pressure vs. Temperature chart.

Expansion Valve (TXV) System
Two Speed Application (DP3GM[60])

Run the unit on high stage cooling for 15-20 minutes until refrigerant pressures stabilize. Check charge with unit on high stage.

SERVICING

Follow checking subcooling instructions

NOTE: The TXV provided is designed to meet the specification requirements for optimum product operation. "NO ADJUSTMENTS NEEDED TO TXV".

NOTE: Even though the compressor section of a Scroll compressor is more tolerant of liquid refrigerant, continued floodback or flooded start conditions may wash oil from the bearing surfaces causing premature bearing failure.

S-104 Checking Compressor Efficiency

The reason for compressor inefficiency is broken or damaged scroll flanks on Scroll compressors, reducing the ability of the compressor to pump refrigerant vapor. The condition of the scroll flanks is checked in the following manner:

1. Attach gauges to the high and low side of the system.
2. Start the system and run a "Cooling Performance Test.

If the test shows:

a. Below normal high side pressure.
b. Above normal low side pressure.
c. Low temperature difference across coil.
d. Low amp draw at compressor.

And the charge is correct. The compressor is faulty - replace the compressor.

S-105B Thermostatic Expansion Valve

The expansion valve is designed to control the rate of liquid refrigerant flow into an evaporator coil in exact proportion to the rate of evaporation of the refrigerant in the coil. The amount of refrigerant entering the coil is regulated since the valve responds to temperature of the refrigerant gas leaving the coil (feeler bulb contact) and the pressure of the refrigerant in the coil.

This regulation of the flow prevents the return of liquid refrigerant to the compressor.

The three forces which govern the operation of the valve are: (1) the pressure created in the power assembly by the feeler bulb, (2) evaporator pressure, and (3) the equivalent pressure of the superheat spring in the valve.

0% bleed type expansion valves are used on the indoor coils. The 0% valve will not allow the system pressures (High and Low side) to equalize during the shut down period. The valve will shut off completely at approximately 100 PSIG Pressure.

Good thermal contact between the feeler bulb and the suction line is essential to satisfactory valve control and performance.

The bulb must be securely fastened to a clean straight section of the suction line. Application of the bulb to a horizontal run of line is preferred. If a vertical installation cannot be avoided the bulb should be mounted so that the capillary tubing comes out at the top.

THE VALVES PROVIDED ARE DESIGNED TO MEET THE SPECIFICATION REQUIREMENTS FOR OPTIMUM PRODUCT OPERATION. **DO NOT USE SUBSTITUTES.**

S-106 Overfeeding

Overfeeding by the expansion valve results in high suction pressure, cold suction line, and possible liquid slugging of the compressor.

If these symptoms are observed:

1. Check for an overcharged unit by referring to the cooling performance charts in the servicing section.
2. Check the operation of the power element in the valve as explained in S-110 Checking Expansion Valve Operation.
3. Check for restricted or plugged equalizer tube.

S-107 Underfeeding

Underfeeding by the expansion valve results in low system capacity and low suction pressures.

If these symptoms are observed:

1. Check for a restricted liquid line or drier. A restriction will be indicated by a temperature drop across the drier.
2. Check the operation of the power element of the valve as described in S-110 Checking Expansion Valve Operation.

Pressure vs. Temperature Chart

R-410A

PSIG	°F	PSIG	°F	PSIG	°F	PSIG	°F	PSIG	°F	PSIG	°F
12	-37.7	114.0	37.8	216.0	74.3	318.0	100.2	420.0	120.7	522.0	137.6
14	-34.7	116.0	38.7	218.0	74.9	320.0	100.7	422.0	121.0	524.0	137.9
16	-32.0	118.0	39.5	220.0	75.5	322.0	101.1	424.0	121.4	526.0	138.3
18	-29.4	120.0	40.5	222.0	76.1	324.0	101.6	426.0	121.7	528.0	138.6
20	-36.9	122.0	41.3	224.0	76.7	326.0	102.0	428.0	122.1	530.0	138.9
22	-24.5	124.0	42.2	226.0	77.2	328.0	102.4	430.0	122.5	532.0	139.2
24	-22.2	126.0	43.0	228.0	77.8	330.0	102.9	432.0	122.8	534.0	139.5
26	-20.0	128.0	43.8	230.0	78.4	332.0	103.3	434.0	123.2	536.0	139.8
28	-17.9	130.0	44.7	232.0	78.9	334.0	103.7	436.0	123.5	538.0	140.1
30	-15.8	132.0	45.5	234.0	79.5	336.0	104.2	438.0	123.9	540.0	140.4
32	-13.8	134.0	46.3	236.0	80.0	338.0	104.6	440.0	124.2	544.0	141.0
34	-11.9	136.0	47.1	238.0	80.6	340.0	105.1	442.0	124.6	548.0	141.6
36	-10.1	138.0	47.9	240.0	81.1	342.0	105.4	444.0	124.9	552.0	142.1
38	-8.3	140.0	48.7	242.0	81.6	344.0	105.8	446.0	125.3	556.0	142.7
40	-6.5	142.0	49.5	244.0	82.2	346.0	106.3	448.0	125.6	560.0	143.3
42	-4.5	144.0	50.3	246.0	82.7	348.0	106.6	450.0	126.0	564.0	143.9
44	-3.2	146.0	51.1	248.0	83.3	350.0	107.1	452.0	126.3	568.0	144.5
46	-1.6	148.0	51.8	250.0	83.8	352.0	107.5	454.0	126.6	572.0	145.0
48	0.0	150.0	52.5	252.0	84.3	354.0	107.9	456.0	127.0	576.0	145.6
50	1.5	152.0	53.3	254.0	84.8	356.0	108.3	458.0	127.3	580.0	146.2
52	3.0	154.0	54.0	256.0	85.4	358.0	108.8	460.0	127.7	584.0	146.7
54	4.5	156.0	54.8	258.0	85.9	360.0	109.2	462.0	128.0	588.0	147.3
56	5.9	158.0	55.5	260.0	86.4	362.0	109.6	464.0	128.3	592.0	147.9
58	7.3	160.0	56.2	262.0	86.9	364.0	110.0	466.0	128.7	596.0	148.4
60	8.6	162.0	57.0	264.0	87.4	366.0	110.4	468.0	129.0	600.0	149.0
62	10.0	164.0	57.7	266.0	87.9	368.0	110.8	470.0	129.3	604.0	149.5
64	11.3	166.0	58.4	268.0	88.4	370.0	111.2	472.0	129.7	608.0	150.1
66	12.6	168.0	59.0	270.0	88.9	372.0	111.6	474.0	130.0	612.0	150.6
68	13.8	170.0	59.8	272.0	89.4	374.0	112.0	476.0	130.3	616.0	151.2
70	15.1	172.0	60.5	274.0	89.9	376.0	112.4	478.0	130.7	620.0	151.7
72	16.3	174.0	61.1	276.0	90.4	378.0	112.6	480.0	131.0	624.0	152.3
74	17.5	176.0	61.8	278.0	90.9	380.0	113.1	482.0	131.3	628.0	152.8
76	18.7	178.0	62.5	280.0	91.4	382.0	113.5	484.0	131.6	632.0	153.4
78	19.8	180.0	63.1	282.0	91.9	384.0	113.9	486.0	132.0	636.0	153.9
80	21.0	182.0	63.8	284.0	92.4	386.0	114.3	488.0	132.3	640.0	154.5
82	22.1	184.0	64.5	286.0	92.8	388.0	114.7	490.0	132.6	644.0	155.0
84	23.2	186.0	65.1	288.0	93.3	390.0	115.0	492.0	132.9	648.0	155.5
86	24.3	188.0	65.8	290.0	93.8	392.0	115.5	494.0	133.3	652.0	156.1
88	25.4	190.0	66.4	292.0	94.3	394.0	115.8	496.0	133.6	656.0	156.6
90	26.4	192.0	67.0	294.0	94.8	396.0	116.2	498.0	133.9	660.0	157.1
92	27.4	194.0	67.7	296.0	95.2	398.0	116.6	500.0	134.0	664.0	157.7
94	28.5	196.0	68.3	298.0	95.7	400.0	117.0	502.0	134.5	668.0	158.2
96	29.5	198.0	68.9	300.0	96.2	402.0	117.3	504.0	134.8	672.0	158.7
98	30.5	200.0	69.5	302.0	96.6	404.0	117.7	506.0	135.2	676.0	159.2
100	31.2	202.0	70.1	304.0	97.1	406.0	118.1	508.0	135.5	680.0	159.8
102	32.2	204.0	70.7	306.0	97.5	408.0	118.5	510.0	135.8	684.0	160.3
104	33.2	206.0	71.4	308.0	98.0	410.0	118.8	512.0	136.1	688.0	160.8
106	34.1	208.0	72.0	310.0	98.4	412.0	119.2	514.0	136.4	692.0	161.3
108	35.1	210.0	72.6	312.0	98.9	414.0	119.6	516.0	136.7	696.0	161.8
110	35.5	212.0	73.2	314.0	99.3	416.0	119.9	518.0	137.0		
112	36.9	214.0	73.8	316.0	99.7	418.0	120.3	520.0	137.3		

*Based on ALLIED SIGNAL Data

REQUIRED LIQUID LINE TEMPERATURE						
LIQUID PRESSURE AT SERVICE VALVE (PSIG)	REQUIRED SUBCOOLING TEMPERATURE (°F)					
	8	10	12	14	16	18
189	58	56	54	52	50	48
195	60	58	56	54	52	50
202	62	60	58	56	54	52
208	64	62	60	58	56	54
215	66	64	62	60	58	56
222	68	66	64	62	60	58
229	70	68	66	64	62	60
236	72	70	68	66	64	62
243	74	72	70	68	66	64
251	76	74	72	70	68	66
259	78	76	74	72	70	68
266	80	78	76	74	72	70
274	82	80	78	76	74	72
283	84	82	80	78	76	74
291	86	84	82	80	78	76
299	88	86	84	82	80	78
308	90	88	86	84	82	80
317	92	90	88	86	84	82
326	94	92	90	88	86	84
335	96	94	92	90	88	86
345	98	96	94	92	90	88
354	100	98	96	94	92	90
364	102	100	98	96	94	92
374	104	102	100	98	96	94
384	106	104	102	100	98	96
395	108	106	104	102	100	98
406	110	108	106	104	102	100
416	112	110	108	106	104	102
427	114	112	110	108	106	104
439	116	114	112	110	108	106
450	118	116	114	112	110	108
462	120	118	116	114	112	110
474	122	120	118	116	114	112
486	124	122	120	118	116	114
499	126	124	122	120	118	116
511	128	126	124	122	120	118

SERVICING

S-110 Checking Expansion Valve Operation (TXV)

1. Remove the remote bulb of the expansion valve from the suction line.
2. Start the system and cool the bulb in a container of ice water, closing the valve. As you cool the bulb, the suction pressure should fall and the suction temperature will rise.
3. Next warm the bulb in your hand. As you warm the bulb, the suction pressure should rise and the suction temperature will fall.
4. If a temperature or pressure change is noticed, the expansion valve is operating. If no change is noticed, the valve is restricted, the power element is faulty, or the equalizer tube is plugged.
5. Capture the charge, replace the valve and drier and evacuate.

S-111 Fixed Orifice Restrictor Devices

The fixed orifice restrictor device (flowrator) used in conjunction with the indoor coil is a predetermined bore (I.D.).

It is designed to control the rate of liquid refrigerant flow into an evaporator coil.

The amount of refrigerant that flows through the fixed orifice restrictor device is regulated by the pressure difference between the high and low sides of the system.

In the cooling cycle when the outdoor air temperature rises, the high side condensing pressure rises. At the same time, the cooling load on the indoor coil increases, causing the low side pressure to rise, but at a slower rate.

Since the high side pressure rises faster when the temperature increases, more refrigerant flows to the evaporator, increasing the cooling capacity of the system.

When the outdoor temperature falls, the reverse takes place. The condensing pressure falls, and the cooling loads on the indoor coil decreases, causing less refrigerant flow.

A strainer is placed on the entering side of the tube to prevent any foreign material from becoming lodged inside the fixed orifice restriction device.

If a restriction should become evident, proceed as follows:

1. Recover refrigerant charge.
2. Remove the orifice or tube strainer assembly and replace.
3. Replace liquid line drier, evacuate and recharge.

Checking Equalization Time

During the “OFF” cycle, the high side pressure bleeds to the low side through the fixed orifice restriction device. Check equalization time as follows:

1. Attach a gauge manifold to the suction and liquid line dill valves.
2. Start the system and allow the pressures to stabilize.
3. Stop the system and check the time it takes for the high and low pressure gauge readings to equalize.

If it takes more than seven (7) minutes to equalize, the restrictor device is inoperative. Replace, install a liquid line drier, evacuate and recharge.

S-112 Checking Restricted Liquid Line

When the system is operating, the liquid line is warm to the touch. If the liquid line is restricted, a definite temperature drop will be noticed at the point of restriction. In severe cases, frost will form at the restriction and extend down the line in the direction of the flow.

Discharge and suction pressures will be low, giving the appearance of an undercharged unit. However, the unit will have normal to high subcooling.

Locate the restriction, replace the restricted part, replace drier, evacuate and recharge.

S-113 Overcharge Of Refrigerant

An overcharge of refrigerant is normally indicated by an excessively high head pressure.

An evaporator coil, using an expansion valve metering device, will basically modulate and control a flooded evaporator and prevent liquid refrigerant return to the compressor.

An evaporator coil, using a fixed orifice restrictor device (flowrator) metering device, could allow liquid refrigerant to return to the compressor under extreme overcharge conditions.

Also with a fixed orifice restrictor device (flowrator) metering device, extreme cases of insufficient indoor air can cause icing of the indoor coil and liquid refrigerant return to the compressor, but the head pressure would be lower.

There are other causes for high head pressure which may be found in the “Service Problem Analysis Guide”.

If other causes check out normal, an overcharge or a system containing non-condensables would be indicated.

If this system is observed:

1. Start the system.
2. Remove and capture small quantities of refrigerant as from the suction line access fitting until the head pressure is reduced to normal.
3. Observe the system while running a cooling performance test. If a shortage of refrigerant is indicated, then the system contains non-condensables.

S-114 Non-Condensables

If non-condensables are suspected, shut down the system and allow the pressures to equalize. Wait at least 15 minutes. Compare the pressure to the temperature of the coldest coil since this is where most of the refrigerant will be. If the pressure indicates a higher temperature than that of the coil temperature, non-condensables are present.

Non-condensables are removed from the system by first removing the refrigerant charge, replacing and/or installing liquid line drier, evacuating and recharging.

Air Conditioning Diagnostic Chart

Issue	Discharge Pressure	Suction Pressure	(Orifice) Superheat	(TXV) Subcooling	Temperature Split
Liquid Line Restriction	↓	↓	↑	↑	↓
System Undercharge	↓	↓	↑	↓	↓
System Overcharge	↑	↑	↓	↑	↓
Non Condensible	↑	↑	↑	↑	↓
Low Indoor Airflow	↓	↓	↓	↑	↑
Inefficient Compressor	↓	↑	↑	↓	↓

S-115 Compressor Burnout

When a compressor burns out, high temperature develops causing the refrigerant, oil and motor insulation to decompose forming acids and sludge.

If a compressor is suspected of being burned-out, attach a refrigerant hose to the liquid line dill valve and properly remove and dispose of the refrigerant.

NOTICE

Violation of EPA regulations may result in fines or other penalties.

Now determine if a burn out has actually occurred. Confirm by analyzing an oil sample using a Sporlan Acid Test Kit, AK-3 or its equivalent.

Remove the compressor and obtain an oil sample from the suction stub. If the oil is not acidic, either a burnout has not occurred or the burnout is so mild that a complete clean-up is not necessary.

If acid level is unacceptable, the system must be cleaned by using the clean-up drier method.

CAUTION

Do not allow the sludge or oil to contact the skin. Severe burns may result.

NOTE: The Flushing Method using R-11 refrigerant is no longer approved.

Suction Line Drier Clean-Up Method

The POE oils used with R410A refrigerant is an excellent solvent. In the case of a burnout, the POE oils will remove any burnout residue left in the system. If not captured by the refrigerant filter, they will collect in the compressor or other system components, causing a failure of the replacement compressor and/or spread contaminants throughout the system, damaging additional components.

The suction line filter drier should be installed as close to the compressor suction fitting as possible. The filter must be accessible and be rechecked for a pressure drop after the system has operated for a time. It may be necessary to use new tubing and form as required.

NOTE: At least twelve (12) inches of the suction line immediately out of the compressor stub must be discarded due to burned residue and contaminates.

1. Remove compressor discharge line strainer.
2. Remove the liquid line drier and expansion valve.
3. Purge all remaining components with dry nitrogen or carbon dioxide until clean.

4. Install new components including liquid line drier.
5. Braze all joints, leak test, evacuate, and recharge system.
6. Start up the unit and record the pressure drop across the drier.
7. Continue to run the system for a minimum of twelve (12) hours and recheck the pressure drop across the drier. Pressure drop should not exceed 6 PSIG.
8. Continue to run the system for several days, repeatedly checking pressure drop across the suction line drier. If the pressure drop never exceeds the 6 PSIG, the drier has trapped the contaminants. Remove the suction line drier from the system.
9. If the pressure drop becomes greater, then it must be replaced and steps 5 through 9 repeated until it does not exceed 6 PSIG.

NOTE: Regardless, the cause for burnout must be determined and corrected before the new compressor is started.

S-200 Checking External Static Pressure

The minimum and maximum allowable duct static pressure is found in the Technical Information Manual.

Too great of an external static pressure will result in insufficient air that can cause icing of the coil, whereas too much air can cause poor humidity control, and condensate to be pulled off the evaporator coil causing condensate leakage. Too much air can cause motor overloading and in many cases this constitutes a poorly designed system. To determine proper air movement, proceed as follows:

External Static Pressure Check

The total external static pressure must be checked on this unit to determine if the airflow is proper.

Total External Static Testing

1. Using a digital manometer measure the static pressure of the return duct at the inlet of the unit (Negative Pressure).

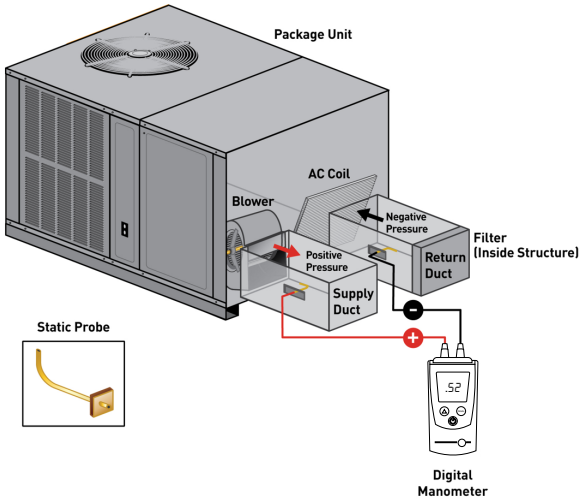

Total External Static

2. Measure the static pressure of the supply duct (Positive Measure).
3. Add the two readings together.

NOTE: Both readings may be taken simultaneously and read directly on the manometer if so desired

4. Consult proper table for quantity of air.

If the external static pressure exceeds the minimum or maximum allowable statics. Check for closed dampers, dirty filters, undersized or poorly laid out ductwork.

Adjusting Airflow

DP3GM models are equipped with EEM motors. This motor is energized by 24V. Adjust the CFM for the unit by changing the 24V low voltage leads to the speed terminal block on the motor.

NOTE: Heating airflow must be adjusted to provide the temperature rise shown on rating plate.

Heating-White Lead	Cooling-Yellow Lead
T1 - Low Speed	T4 - Low Speed
T2 - Medium Speed	T5 - High Speed
T3 - High Speed	

SERVICING

HEATING			COOLING		
Speed Tap	Definition	Lead Color	Speed Tap	Definition	Lead Color
T1	Low Speed Heat	White	T3	Low Speed Cool	Purple
T2	High Speed Heat	Brown	T4	High Speed Cool	Yellow
			T5	High Speed Cool Hi-Static	

The DP5GM models are equipped with ECM circulating blower motors. The ECM motor is controlled by DIP Switch settings on the motor control board

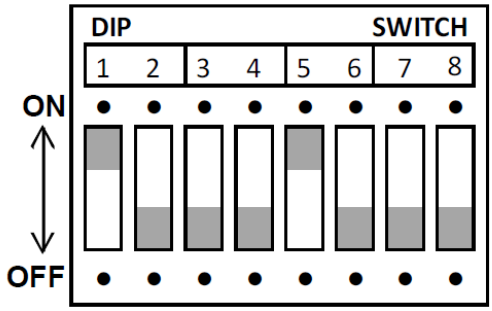

Factory DIP Switch Settings

Switches	Function
1, 2	Heating Speeds
3	Unused
4	OFF for Two-Stage
5, 6	Cooling Speeds
7, 8	Airflow Adjust

DIP Switch Functions

S-201 Checking Temperature Rise

Temperature rise is related to the BTUH output of the unit and the amount of air (CFM) circulated over the heat exchanger.

All units are designed for a given range of temperature increase. This is the temperature of the air leaving the unit minus the temperature of the air entering the unit.

The more air (CFM) being delivered through a given unit the less the rise will be; so the less air (CFM) being delivered, the greater the rise. The temperature rise should be adjusted in accordance to a given unit specifications and its external static pressure.

1. Check BTUH input to unit do not exceed input rating stamped on rating plate.
2. Take entering and leaving air temperatures.
3. Select the proper speed tap or dip switch setting for direct drive units.
4. Take motor amperage draw to determine that the motor is not overloaded during adjustments.

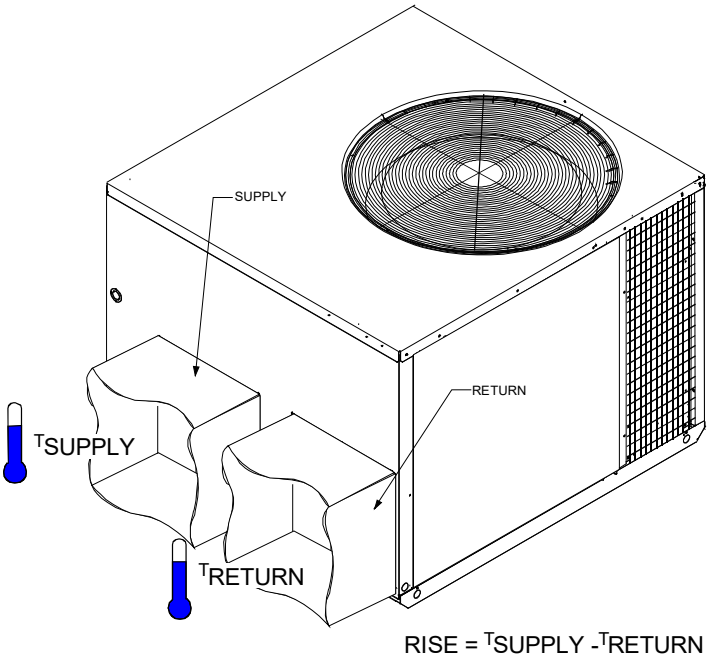

Checking Temperature Rise

S-300 Testing Primary Limit Control

DPGM units use a snap-disk type primary limit device. Sometimes referred to as “stat on a stick”. The limit setting is fixed and must not be readjusted in the field.

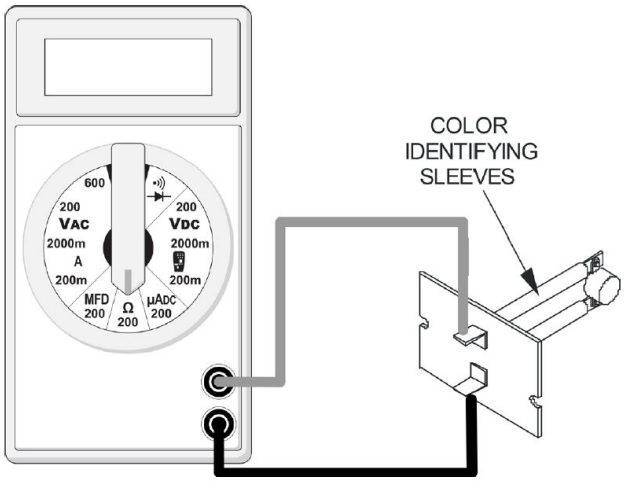

Testing Primary Limit Control

SERVICING

Refer to the specification section to determine the proper limit cutout temperature for the model being serviced.

In all instances the limit control is wired in series with the ignition control.

If the temperature within the furnace should exceed this setting, the control will open, de-energizing the ignition control which in turn will open the electrical circuit to the gas valve.

The control will automatically reset when the temperature within the combustion chamber is sufficiently lowered.

WARNING

HIGH VOLTAGE
Disconnect all power before servicing or installing this unit. Multiple power sources may be present. Failure to do so may cause property damage, personal injury or death.

1. Remove electrical power to unit. Some units may have more than one source of power.
2. Remove the wires from the limit control terminals.
3. Using an ohmmeter, test for continuity across the two terminals.
4. If limit test open allow unit to cool and retest.
5. If still open, replace the control.

S-301 Testing Auxiliary Limit

The auxiliary limit control is a preset nonadjustable control mounted in the blower compartment area.

It is connected in series with the rollout switch wiring to the gas valve. If its temperature should be exceeded, it will open, interrupting the voltage to the gas valve causing it to open.

An additional limit (primary limit) control is required for safety control of high temperature within the furnace or ductwork.

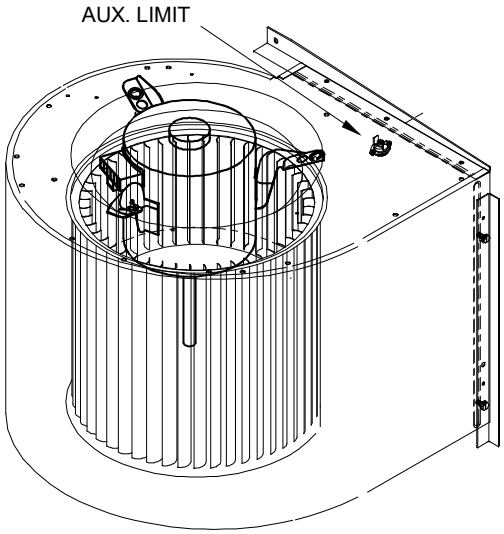

WARNING

HIGH VOLTAGE
Disconnect all power before servicing or installing this unit. Multiple power sources may be present. Failure to do so may cause property damage, personal injury or death.

1. Remove the wires from the auxiliary limit control terminals.
2. Using an ohmmeter, test for continuity across the two terminals. No reading indicates the control is open. Allow unit to cool and retest. If still open, replace the control.

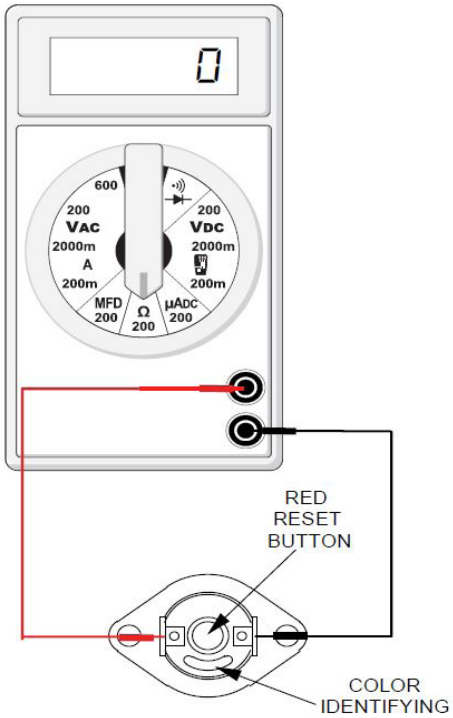

Testing Auxiliary Limit Control

S-302 Checking Flame Rollout Switch

DP3GM units are equipped with a temperature-activated manual reset control. This control is mounted to the manifold assembly and is wired in series with the auxiliary limit and gas valve. The control is designed to open should a flame roll out occur. An over firing condition or flame impingement on the heat shield can also cause the control to open.

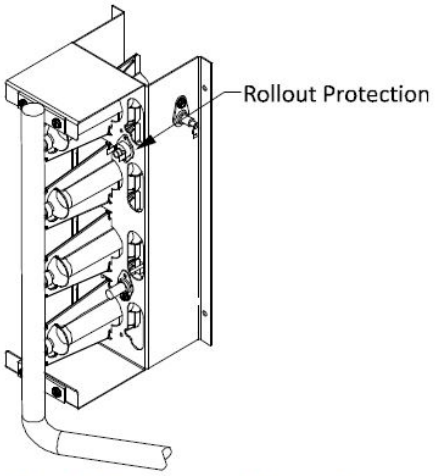

Rollout Protection on Burner Bracket

If the rollout control has opened, the circuit between the ignition control and gas valve will be interrupted and the ignition control module will go into lockout. The servicer should reset the ignition control by opening and closing the thermostat circuit. The servicer should look for the ignitor sparking which indicates there is power to the ignition control. The servicer should measure the voltage between each side of the rollout control and ground while the ignition control is try to power the gas valve.

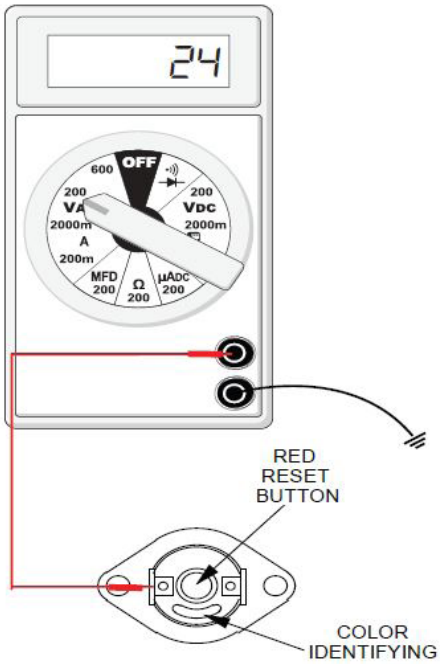

Checking Flame Rollout Switch

Limit Switch Operation (Applies to Primary, auxiliary, and Rollout Limits) DSI Systems.

If a limit switch opens, the indoor blower is energized on heat speed and the induced draft blower is energized. The LED on the control flashes “4” to indicate an open limit switch. The blower and inducer remain on while the limit switch is open. The gas valve is de-energized. Power to the thermostat “R” is removed while the limit switch is open.

When the limit switch re-closes, the induced draft motor runs through its post purge and the indoor blower goes through the heat off delay.

If a call for heat exists when the limit switch re-closes, the control goes through a pre-purge period and then makes an ignition attempt. The indoor blower remains on (for the delay off time) during the re-ignition attempt.

1. If no voltage is measured on either side of control it indicates ignition control or wiring to control problem.

2. If voltage is measured on one side of the control and not the other, it indicates the control is open.
3. If voltage is measured on both sides of the control the wiring to gas valve or valve is at fault.

Servicing Procedure With Furnace Not Firing

1. Confirm that the outer door was in place and all screws tightened (No leaks under the door).
2. Check to see if any damage was done to the furnace especially the wiring.
3. Confirm that heat exchanger is not obstructed by feeling for discharge air from the flue hood when the combustion blower is running but the unit is not firing.

If the above steps do not suggest the reason the control has tripped the furnace should be fired.

1. Remove the heating compartment door.
2. Turn of the power or open the thermostat circuit.
3. Reset the rollout control.
4. Turn power on and put the unit into a call for heating.

CAUTION

Flame rollout could occur. Keep face and hands a safe distance from burner area.

5. Look under the heat shield as the unit is running. Flames should be drawn into firing tubes.
   a. If only one burners flame is not drawn into the tube, that tube is restricted.
   b. If, without the air circulation blower running, all flames are not drawn into the tubes either the collector box, combustion blower, or flue outlet is obstructed. If the combustion blower or flue outlet is obstructed, the pressure switch should have opened preventing the unit from firing, also inspect the unit pressure switch and wiring.
   c. If the burner flame is not drawn into the tube only when the air circulation blower is running, then a cracked heat exchanger tube is present.

S-303 Testing Inducer Motor

WARNING

HIGH VOLTAGE
Disconnect all power before servicing or installing this unit. Multiple power sources may be present. Failure to do so may cause property damage, personal injury or death.

1. Disconnect the motor wire leads from its connection point at integrated ignition control module.
2. Using and ohmmeter, test for continuity between each of the motor leads.
3. Touch one probe of the ohmmeter to the motor frame (ground) and the other probe in turn to each lead.
   If the windings do not test continuous or a reading is obtained to ground, replace the motor.
4. After completing check and/or replacement of induced draft blower motor.
5. Turn on electrical power and verify proper unit operation.

S-304 Testing Gas Valve

Direct Spark Ignition (DSI) Systems

A combination redundant operator type gas valve which provides all manual and automatic control functions required for gas fired heating equipment is used on 13 SEER models.

A two-stage combination redundant operator type gas valve which provides all manual and automatic control functions required for gas fired heating equipment is used on 15 SEER models.

The valve provides control of main burner gas flow, pressure regulation, and 100 percent safety shut-off.

WARNING

HIGH VOLTAGE
Disconnect all power before servicing or installing this unit. Multiple power sources may be present. Failure to do so may cause property damage, personal injury or death.

SERVICING

1. Ensure gas valve and main gas supply are on.
2. Using a voltmeter, check for 24 volts as noted below for 1- and 2-stage gas valves.
   a. For 1-stage gas valves, check from the purple and blue wires.
   b. For 2-stage gas valves, check from C and M terminals on the valve.
3. If 24 volts are present and no gas flows through the valve, replace valve.

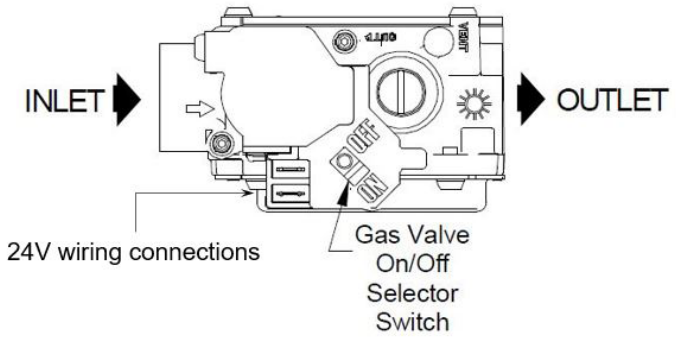

W/R36J22-202
White Rogers Model 36G22 1-Stage Gas Valve

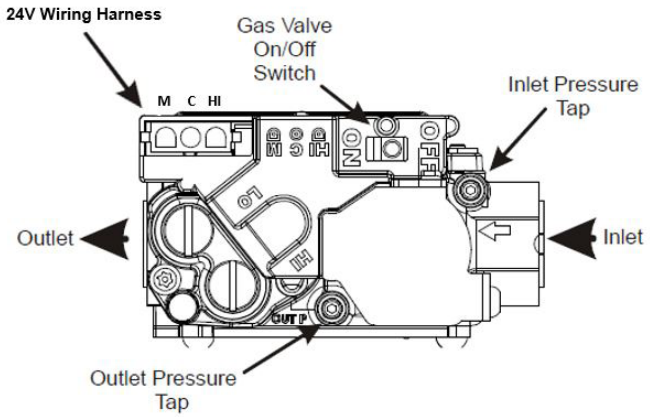

W/R36G54-238
White Rogers Model 36G 2-Stage Gas Valve

S-305 Checking Main Burners

The main burners are used to provide complete combustion of various fuels in a limited space, and transfer this heat of the burning process to the heat exchanger.

Proper ignition, combustion, and extinction are primarily due to burner design, orifice sizing, gas pressure, primary and secondary air, vent and proper seating of burners.

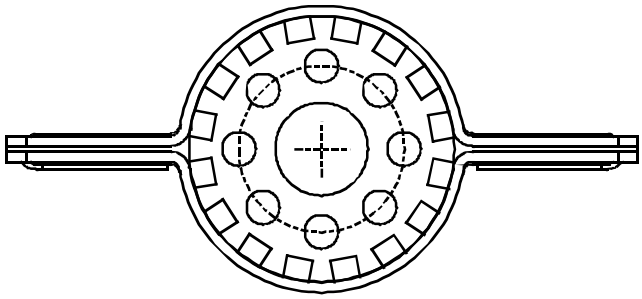

Beckett Burner

WARNING

Disconnect gas and electrical power supply.

In checking main burners, look for signs of rust, oversized and undersized carry-over ports restricted with foreign material, etc.

S-306 Checking Orifices

A predetermined fixed gas orifice is used in all of these furnaces. That is an orifice which has a fixed bore and position.

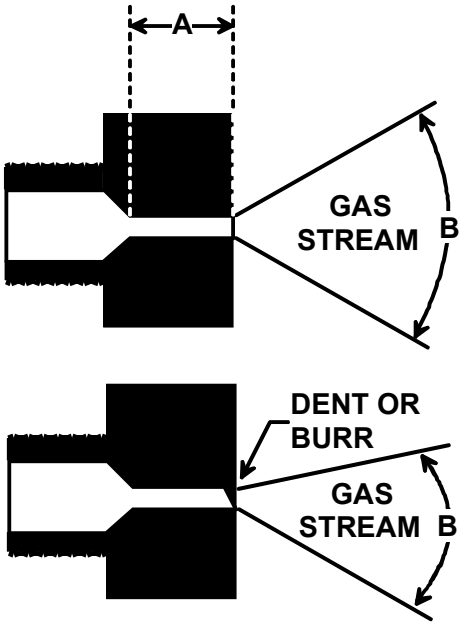

The length of Dimension “A” determines the angle of Gas Stream Defraction, “B”.

A dent or burr will cause severe deflection of gas stream.

SERVICING

No resizing should be attempted until all factors are taken into consideration such as inlet manifold gas pressure, alignment, and positioning, specific gravity and BTU content of the gas being consumed.

The only time resizing is required is when a reduction in firing rate is required for an increase in altitude.

Orifices should be treated with care in order to prevent damage. They should be removed and installed with a box-end wrench in order to prevent distortion. In no instance should an orifice be peened over and redrilled. This will change the angle or deflection of the vacuum effect or entraining of primary air, which will make it difficult to adjust the flame properly. This same problem can occur if an orifice spud of a different length is substituted.

WARNING

Disconnect gas and electrical power supply.

1. Check orifice visually for distortion and/or burrs.
2. Check orifice size with orifice sizing drills.
3. If resizing is required, a new orifice of the same physical size and angle with proper drill size opening should be installed.

S-307 Checking Gas Pressure

Gas inlet and manifold pressures should be checked and adjusted in accordance to the type of fuel being consumed.

NOTE: Use adapter kit #0151K00000S to measure gas pressure on White-Rodgers 36J22 and 36G54 gas valves.

WARNING

Disconnect gas and electrical power supply.

1. Connect a water manometer or adequate gauge to the inlet pressure fitting of the gas valve.
2. Remove the pressure tap fitting at the manifold if provided or check at the gas valve outlet fitting and connect another manometer or gauge.

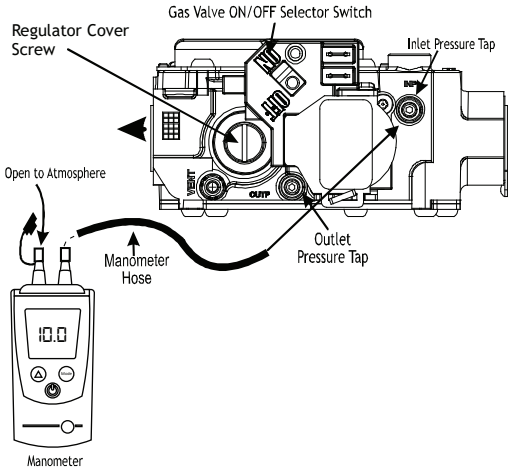

White Rogers Model 36J 1-Stage Gas Valve

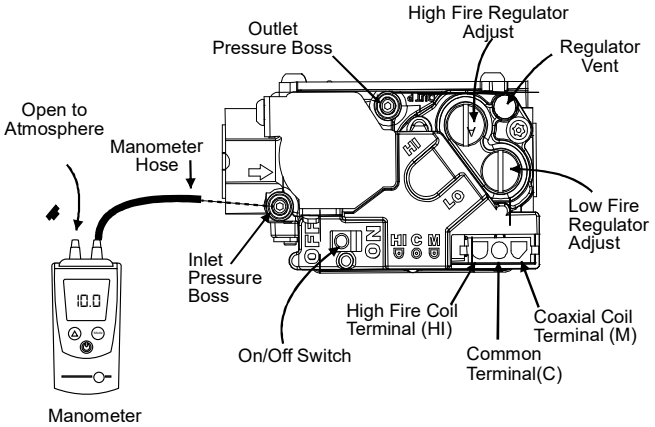

White Rogers Model 36G 2-Stage Gas Valve

Measuring Inlet and Manifold Gas Pressure

With Power on:

WARNING

Line voltage now present.

3. Put furnace into heating cycle and turn on all other gas consuming appliances.

For **NATURAL GAS**:

a. Inlet pressure should be a nominal 7” w.c.
b. (2 stage heat models only) Manifold pressure on low stage should be 2.0” w.c. ± .3”w.c.
c. Manifold pressure for 1 stage heat models and high stage for 2 stage heat models should be 3.5” ± .3”w.c.

SERVICING

For **PROPANE GAS**:

a. Inlet pressure should be a nominal 11” w.c.
b. (2 stage heat models only) Manifold pressure on low stage should be 6” w.c.
c. Manifold pressure for 1 stage heat models and high stage for 2 stage heat models should be 10” w.c.

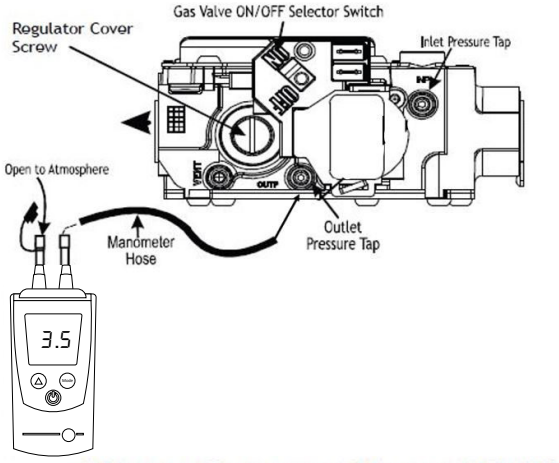

White-Rogers Model 36J22 Connected to Manometer

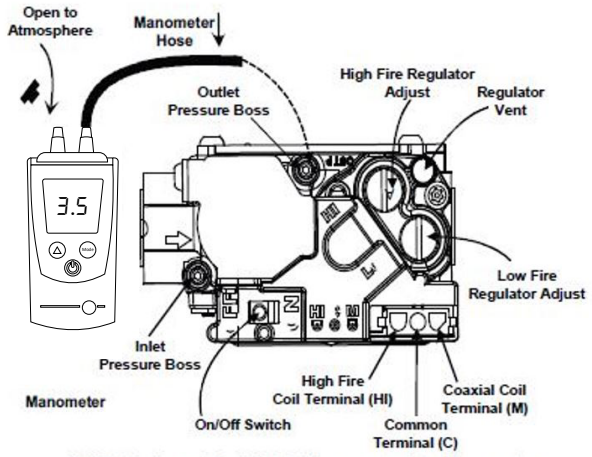

White-Rogers Model 36J54 Connected to Manometer

Manifold Gas Pressure	
Natural Gas	3.5" w.c.
Propane Gas	10.0" w.c.

Single Stage

Manifold Gas Pressure			
Gas		Range	Nominal
Natural	Low Stage	1.6 - 2.2" w.c.	2.0" w.c.
	High Stage	3.2 - 3.8" w.c.	3.5" w.c.
Propane	Low Stage	5.7 - 6.3" w.c.	6.0" w.c.
	High Stage	9.7 - 10.3" w.c.	10.0" w.c.

Two Stage

If operating pressures differ from above, make necessary pressure regulator adjustments, check piping size, etc., and/or consult with local utility.

S-308 Checking For Delayed Ignition

Delayed ignition is a delay in lighting a combustible mixture of gas and air which has accumulated in the combustion chamber.

When the mixture does ignite, it may explode and/or rollout causing burning in the burner venturi.

If delayed ignition should occur, the following should be checked:

1. Improper gas pressure - adjust to proper pressure. (See S-307)
2. Improper burner positioning - burners should be in locating slots, level front to rear and left to right.
3. Carry over (lighter tube or cross lighter) obstructed - clean.
4. Main burner orifice(s) deformed, or out of alignment to burner - replace.

S-309 Checking For Flashback

Flashback will also cause burning in the burner venturi, but is caused by the burning speed being greater than the gas-air flow velocity coming from a burner port.

Flashback may occur at the moment of ignition, after a burner heats up or when the burner turns off. The latter is known as extinction pop.

Since the end results of flashback and delayed ignition can be the same (burning in the burner venturi) a definite attempt should be made to determine which has occurred.

If flashback should occur, check for the following:

1. Improper gas pressure - adjust to proper pressure. See S-307.
2. Check burner for proper alignment and/or replace burner.
3. Improper orifice size - check orifice for obstruction.

S-310 Checking Pressure Control

A pressure control device is used to measure negative pressure at the induced draft blower motor inlet to detect a partial or blocked flue.

Pressure Switch Operation (DSI Direct Spark System)

The pressure switch is ignored unless there is a call for heat. When the control receives a call for heat, the control

checks to see that the pressure switch is open. If the control sees that the pressure switch is closed before the induced draft blower is energized, the LED will flash a code of “2” (to indicate the pressure switch is stuck closed) and the inducer will remain off until the pressure switch opens.

If the pressure switch opens before the ignition period, the induced draft blower will remain on and the control will stay in pre-purge until the pressure switch is closed for an entire 15 second pre-purge period. The LED will flash a code of “3” to indicate open pressure switch.

If the pressure switch opens after the gas valve has been energized, the control will de-energize the gas valve and run the indoor blower through the heat off delay. The inducer stays on until the pressure switch re-closes. Then the control makes another ignition attempt.

WARNING

HIGH VOLTAGE
Disconnect all power before servicing or installing this unit. Multiple power sources may be present. Failure to do so may cause property damage, personal injury or death.

1. Remove wires from the electrical terminals.
2. Using a VOM check from Common to NO (Normally Open) - should read open.
   If switch reads as noted proceed to Step 3, otherwise replace control.
3. Remove the pressure control hose from the control and interconnect with an inclined manometer as shown:

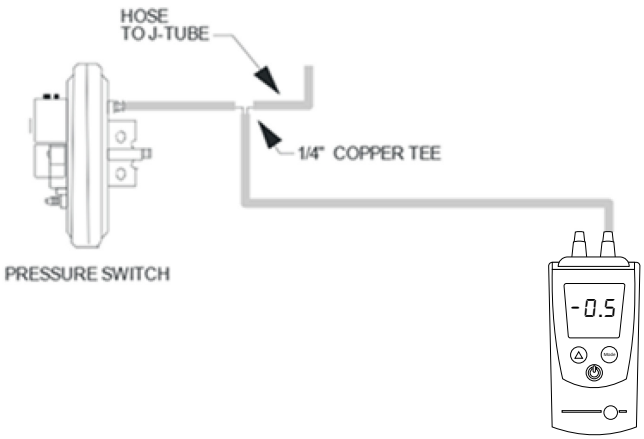

Reconnect wires to the Common and NO terminals.

With Power ON:

WARNING

Line voltage now present.

4. Energize furnace for heating cycle. The induced draft blower motor will begin to run. The inclined manometer should read approximately -1.2” ± 0.3” W.C with no combustion.
5. Remove and check the two electrical wires and using the VOM check from Common to NO (Normally Open), it should read closed (with I.D. motor running). If not as above, replace pressure control.
6. Reconnect all wires to the control and place in heating cycle.
7. As the unit fires on high stage, the inclined manometer negative pressure will drop to -1.0” ± 0.3” W.C.
8. If not as listed, replace control.

INPUT/BURNER	HIGH ALTITUDE KIT	20,000 BTUH NAT/18,OOO BTUH LP							
		ELEVATION ABOVE SEA-LEVEL (FEET)							
		2000	3000	4000	4500	5000	6000	7000	8000
U.S. BURNER ORIFICE	HA-03	46/1.25MM	47/1.25MM	47/56	-	48/56	48/57	49/57	49/57
CANADA BURNER ORIFICE		-	-	-	48/56	-	-	-	-

Natural Gas and LP Gas Installations at Altitudes >2000ft

SERVICING

NOTE: The pressure switch must be mounted with the diaphragm in a vertical position.

S-311 High Altitude Application

High Altitude Derate - U.S. Installations Only

IMPORTANT NOTE: The gas/electric units naturally derate with altitude. Do not attempt to increase the firing rate by changing orifices or increasing the manifold pressure. This can cause poor combustion and equipment failure. At all altitudes, the manifold pressure must be within 0.3 inches W.C. of that listed on the nameplate for the fuel used. At all altitudes and with either fuel, the air temperature rise must be within the range listed on the unit nameplate. Refer to the Installation Manual provided with the LP kit for conversion from natural gas to propane gas and for altitude adjustments.

When this package unit is installed at high altitude, the appropriate High Altitude orifice kit must be installed. As altitude increases, there is a natural reduction in the density of both the gas fuel and combustion air. This kit will provide the proper design certified input rate within the specified altitude range. High altitude kits are not approved for use in Canada. For installations above 2,000 feet, use kit HA-03. The HA-03 kit is used for both Natural and LP gas at high altitudes.

Use LPM-08 (2 stage heat models) or LPM-07 (1 stage heat models) propane conversion kit for propane conversions at altitudes below 2000 feet. Natural gas installations below 2000 feet do not require a kit.

For propane conversions above 2000 feet, high altitude kit HA-03 is required in addition to the propane conversion kit.

S-313 Testing Ignition Control Module

NOTE: Failure to earth ground the unit, or a high resistance connection in the ground may cause the control to lockout due to failure to flame sense.

WARNING

To avoid personal injury or death due to electric shock, wiring to the unit must be properly grounded. Disconnect power before installing or servicing.

Testing Direct Spark Ignition (DSI) systems

Thermostat calling for heat (15 second prepurge time and 7 second trial for ignition).

9. Check for 230 VAC from L1 terminal of control module to L2. No voltage - check wire connections, continuity, etc.
10. Check for 24 VAC at “R” to “C” thermostat terminals.
    a. No voltage - check 3 amp automotive type fuse on control board. A blown fuse would indicate a short in the 24 VAC circuit (thermostat or limit circuit).
    b. Voltage Present - check limit, auxiliary limit and rollout (S-300, S-301 and S-302). If limit, auxiliary limit and rollout are closed, then check for 24 VAC at the gas valve terminals.
    No 24 VAC at gas valve - replace Control board.

PCBAG123 Ignition Board Fault Codes

Status Light	Equipment Status	Check
On	Normal Operation	
Off	No Power or Internal Control Fault	Check Input Power, Check Fuse on Control, Replace Control
1 Blink	Ignition Failure, Open Rollout Switch, or Open Aux. Limit Switch	Check Gas Flow, Check Gas Pressure, Check Gas Valve, Check Flame Sensor, Check Flame Rollout, Check Aux. Limit.
2 Blinks	Pressure Switch Open	Check Pressure Switch
3 Blinks	Pressure Switch Closed	Check Pressure Switch
4 Blinks	Open Main Limit Switch	Main Limit Switch Open
5 Blinks	False Flame Sensed	Sticking Gas Valve
6 Blinks	Compressor Output Delay	3 Minute Compressor Anti Cycle Timer

NOTE: The flash rate is 0.25 seconds on, 0.25 seconds off, with a 2 second pause between codes.

SERVICING

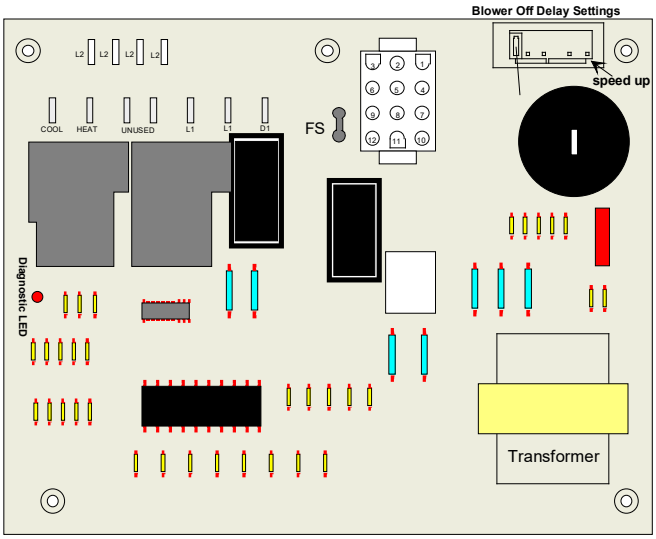

PCBAG123 DSI Control Board

TESTING DIRECT SPARK IGNITION (DSI) SYSTEMS PCBAG127 BOARD

Heating Mode

Indoor thermostat calling for heat (15 second prepurge time and 7 second trial for ignition).

1. Check for 230 volts from L1 terminal of control module to L2. No voltage - check wire connections, continuity, etc.
2. Check for 24 volts at “R” to “C” thermostat terminals.
   a. No voltage - check 3 amp automotive type fuse on control board. A blown fuse could indicate a short in the 24 volt circuit (thermostat or limit circuit).
   b. Voltage Present - check limit and rollout (S-301 and S-302). If limit and rollout are closed, then check for 24 VAC at the gas valve terminals.
   c. No 24 VAC at gas valve - check 9 pin connector and wires from ignition control to gas valve. If wires and connections at 9 pin connector check good, replace ignition control.
   d. Voltage present at gas valve - replace gas valve.

LED Flashes/Status	System Condition
Off	Internal Control Fault, Micro Controller Detected Hardware Failure, or Gas Valve Detected Energized When it Should be De-energized
1	Lockout Due to Excessive Retries
2	Pressure Switch Stuck Open
3	Pressure Switch Stuck Closed
4	Open High Temperature Limit
5	Flame Present Outside the Flame Detect Mode
6	Compressor Short Cycle Delay Active
7	Limit Opened Five Times within the Same Call for Heat
8	Indoor Thermostat/Outdoor Thermostat is Open
9	Pressure Switch/Loss of Charge Switch is Open
Steady ON	Normal

Red LED Fault Codes

LED Flashes/Status	Flame Condition
2	Flame Present Outside the Flame Detect Mode
1	Low Flame Signal Current
Steady ON	Normal Flame
OFF	No Flame Present

Amber LED Flame Status Codes

SERVICING

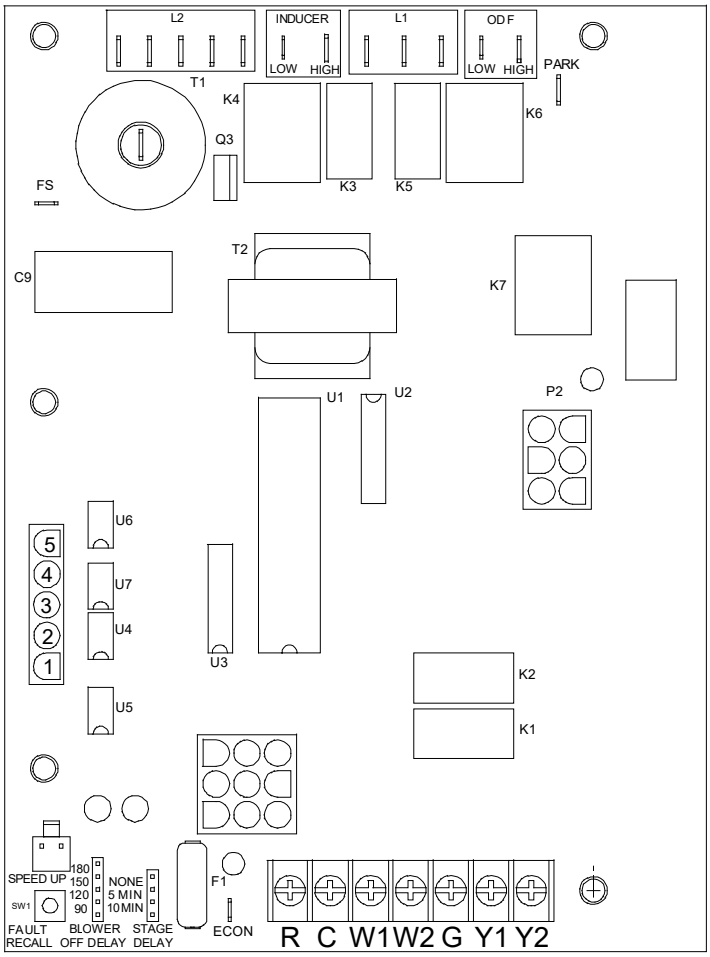

PCBAG127 DSI Control Board

S-314 Checking Flame Sensor

A flame sensing device is used in conjunction with the ignition control module to prove combustion. If a microamp signal is not present the control will de-energize the gas valve and "retry" for ignition or lockout.

DSI Direct Spark Ignition Systems

WARNING

HIGH VOLTAGE
Disconnect all power before servicing or installing this unit. Multiple power sources may be present. Failure to do so may cause property damage, personal injury or death.

1. Disconnect the flame sensor wire from terminal FS of the ignition control module.

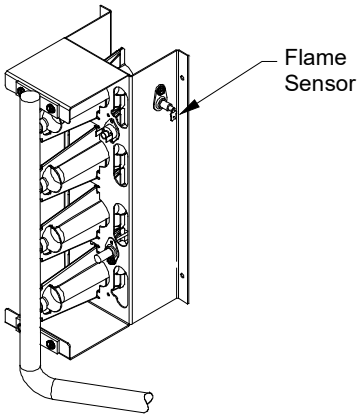

Flame Sensor

2. Connect a microamp meter in series with this wire and terminal FS.
3. Be sure the negative side of the meter is to the wire and the positive of the meter is to terminal FS.
4. Turn on Power.

WARNING

Line voltage now present.

5. With Power ON, Place the unit into a heating cycle.
6. As soon as flame is established a microamp reading should be evident once proof of flame (microamp reading) is established, the hot surface ignitor will be de-energized.
7. The nominal microamp reading is 4 microamps.
8. If the microamp current is less than 0.5 microamp the control will lockout and flash a code of 1 flash after attempting to reestablish flame sense.
9. If the microamp reading is less than the minimum specified, check for high resistance wiring connections, the distance (3/16") between the sensor and burner, flame sensor connections, dirty flame sensor or poor grounding.
10. If no reading, check for continuity on all components and if good - replace ignition control module.

NOTE: Contaminated fuel or combustion air can create a nearly invisible coating on the flame sensor. This coating works as an insulator causing a loss in the flame sense signal. If this situation occurs the flame sensor must be cleaned with steel wool. Do not use sand paper, the silicone in sand paper will further contaminate the sensor.

BLOWER PERFORMANCE DATA

SINGLE PHASE

DP3GM2404041** - Rise Range: 25° - 55°													
E.S.P.	T1 HEATING SPEED			T2 HEATING SPEED			T3 HEATING SPEED			T4 COOLING SPEED		T5 COOLING SPEED	
	CFM	WATTS	RISE	CFM	WATTS	RISE	CFM	WATTS	RISE	CFM	WATTS	CFM	WATTS
0.1	695	62	44	820	93	37	1050	167	29	1020	153	1119	208
0.2	650	71	47	785	100	39	1010	180	30	985	160	1110	216
0.3	605	77	51	745	108	41	970	186	32	946	168	1083	222
0.4	565	89	54	700	117	44	935	192	33	905	175	1052	229
0.5	480	99	X	665	127	46	890	203	35	863	183	1017	237
0.6	415	106	X	575	138	53	850	208	36	813	190	979	243
0.7	365	110	X	510	146	X	815	216	38	759	199	934	250
0.8	320	119	X	455	155	X	755	222	41	701	206	879	259

DP3GM2406041** - Rise Range: 30° - 60°													
E.S.P.	T1 HEATING SPEED			T2 HEATING SPEED			T3 HEATING SPEED			T4 COOLING SPEED		T5 COOLING SPEED	
	CFM	WATTS	RISE	CFM	WATTS	RISE	CFM	WATTS	RISE	CFM	WATTS	CFM	WATTS
0.1	695	62	X	820	93	56	1050	167	44	1020	153	1119	208
0.2	650	71	X	785	100	59	1010	180	46	985	160	1110	216
0.3	605	77	X	745	108	X	970	186	48	946	168	1083	222
0.4	565	89	X	700	117	X	935	192	49	905	175	1052	229
0.5	480	99	X	665	127	X	890	203	52	863	183	1017	237
0.6	415	106	X	575	138	X	850	208	54	813	190	979	243
0.7	365	110	X	510	146	X	815	216	57	759	199	934	250
0.8	320	119	X	455	155	X	755	222	X	701	206	879	259

DP3GM3004041** - Rise Range: 25° - 55°													
E.S.P.	T1 HEATING SPEED			T2 HEATING SPEED			T3 HEATING SPEED			T4 COOLING SPEED		T5 COOLING SPEED	
	CFM	WATTS	RISE	CFM	WATTS	RISE	CFM	WATTS	RISE	CFM	WATTS	CFM	WATTS
0.1	680	61	45	840	103	37	1035	174	30	1202	246	1225	276
0.2	640	72	48	795	109	39	995	184	31	1173	251	1185	275
0.3	605	80	51	750	117	41	960	192	32	1143	258	1150	289
0.4	555	89	X	710	126	43	925	205	33	1110	265	1115	296
0.5	490	93	X	660	132	47	875	200	35	1073	272	1085	303
0.6	455	107	X	615	138	50	840	217	37	1035	278	1045	312
0.7	395	109	X	570	150	54	795	222	39	994	285	1000	315
0.8	350	119	X	515	157	X	755	226	41	947	293	960	320

DP3GM3006041** - Rise Range: 30° - 60°													
E.S.P.	T1 HEATING SPEED			T2 HEATING SPEED			T3 HEATING SPEED			T4 COOLING SPEED		T5 COOLING SPEED	
	CFM	WATTS	RISE	CFM	WATTS	RISE	CFM	WATTS	RISE	CFM	WATTS	CFM	WATTS
0.1	680	61	X	840	103	55	1035	174	45	1202	246	1225	276
0.2	640	72	X	795	109	58	995	184	46	1173	251	1185	275
0.3	605	80	X	750	117	X	960	192	48	1143	258	1150	289
0.4	555	89	X	710	126	X	925	205	50	1110	265	1115	296
0.5	490	93	X	660	132	X	875	200	53	1073	272	1085	303
0.6	455	107	X	615	138	X	840	217	55	1035	278	1045	312
0.7	395	109	X	570	150	X	795	222	58	994	285	1000	315
0.8	350	119	X	515	157	X	755	226	X	947	293	960	320

X = Heating Temperature Rise Not Recommended.

BLOWER PERFORMANCE DATA

SINGLE / THREE PHASE

DP3GM3604041** - Rise Range: 25° - 55°													
E.S.P.	T1 HEATING SPEED			T2 HEATING SPEED			T3 HEATING SPEED			T4 COOLING SPEED		T5 COOLING SPEED	
	CFM	WATTS	RISE	CFM	WATTS	RISE	CFM	WATTS	RISE	CFM	WATTS	CFM	WATTS
0.1	745	76	41	1115	206	28	1265	285	X	1448	342	1440	426
0.2	690	84	45	1075	215	29	1230	290	X	1403	343	1390	428
0.3	635	91	48	1030	221	30	1175	300	26	1358	354	1365	440
0.4	570	98	54	985	233	31	1140	303	27	1319	361	1335	440
0.5	505	107	X	940	234	33	1100	311	28	1277	366	1295	456
0.6	450	115	X	895	242	34	1055	319	29	1232	376	1255	456
0.7	395	118	X	845	248	36	1010	326	30	1176	386	1220	465
0.8	345	126	X	785	252	39	960	335	32	1120	395	1180	468

DP3GM3606041** - Rise Range: 30° - 60°													
E.S.P.	T1 HEATING SPEED			T2 HEATING SPEED			T3 HEATING SPEED			T4 COOLING SPEED		T5 COOLING SPEED	
	CFM	WATTS	RISE	CFM	WATTS	RISE	CFM	WATTS	RISE	CFM	WATTS	CFM	WATTS
0.1	745	76	X	1115	206	41	1265	285	36	1448	342	1440	426
0.2	690	84	X	1075	215	43	1230	290	37	1403	343	1390	428
0.3	635	91	X	1030	221	45	1175	300	39	1358	354	1365	440
0.4	570	98	X	985	233	47	1140	303	40	1319	361	1335	440
0.5	505	107	X	940	234	49	1100	311	42	1277	366	1295	456
0.6	450	115	X	895	242	52	1055	319	44	1232	376	1255	456
0.7	395	118	X	845	248	55	1010	326	46	1176	386	1220	465
0.8	345	126	X	785	252	59	960	335	48	1120	395	1180	468

DP3GM3608041/43** - Rise Range: 30° - 60°													
E.S.P.	T1 HEATING SPEED			T2 HEATING SPEED			T3 HEATING SPEED			T4 COOLING SPEED		T5 COOLING SPEED	
	CFM	WATTS	RISE	CFM	WATTS	RISE	CFM	WATTS	RISE	CFM	WATTS	CFM	WATTS
0.1	745	76	X	1115	206	55	1265	285	49	1448	342	1440	426
0.2	690	84	X	1075	215	57	1230	290	50	1403	343	1390	428
0.3	635	91	X	1030	221	60	1175	300	52	1358	354	1365	440
0.4	570	98	X	985	233	X	1140	303	54	1319	361	1335	440
0.5	505	107	X	940	234	X	1100	311	56	1277	366	1295	456
0.6	450	115	X	895	242	X	1055	319	58	1232	376	1255	456
0.7	395	118	X	845	248	X	1010	326	X	1176	386	1220	465
0.8	345	126	X	785	252	X	960	335	X	1120	395	1180	468

DP3GM4206041** - Rise Range: 30° - 60°													
E.S.P.	T1 HEATING SPEED			T2 HEATING SPEED			T3 HEATING SPEED			T4 COOLING SPEED		T5 COOLING SPEED	
	CFM	WATTS	RISE	CFM	WATTS	RISE	CFM	WATTS	RISE	CFM	WATTS	CFM	WATTS
0.1	1055	156	44	1380	298	33	1415	327	33	1542	392	1637	444
0.2	1000	166	46	1320	312	35	1360	335	34	1494	403	1593	454
0.3	940	173	49	1270	318	36	1305	343	35	1437	409	1541	459
0.4	880	181	52	1220	327	38	1260	353	37	1392	419	1497	473
0.5	825	189	56	1160	336	40	1200	359	38	1342	430	1450	478
0.6	760	204	X	1115	342	41	1150	371	40	1295	440	1407	485
0.7	705	207	X	1060	347	44	1110	375	42	1238	447	1357	493
0.8	625	210	X	1000	361	46	1060	381	44	1183	454	1304	502

DP3GM4208041** - Rise Range: 30° - 60°													
E.S.P.	T1 HEATING SPEED			T2 HEATING SPEED			T3 HEATING SPEED			T4 COOLING SPEED		T5 COOLING SPEED	
	CFM	WATTS	RISE	CFM	WATTS	RISE	CFM	WATTS	RISE	CFM	WATTS	CFM	WATTS
0.1	1055	156	58	1380	298	45	1415	327	43	1542	392	1637	444
0.2	1000	166	X	1320	312	47	1360	335	45	1494	403	1593	454
0.3	940	173	X	1270	318	48	1305	343	47	1437	409	1541	459
0.4	880	181	X	1220	327	50	1260	353	49	1392	419	1497	473
0.5	825	189	X	1160	336	53	1200	359	51	1342	430	1450	478
0.6	760	204	X	1115	342	55	1150	371	53	1295	440	1407	485
0.7	705	207	X	1060	347	58	1110	375	55	1238	447	1357	493
0.8	625	210	X	1000	361	X	1060	381	58	1183	454	1304	502

X = Heating Temperature Rise Not Recommended.

BLOWER PERFORMANCE DATA

SINGLE / THREE PHASE

DP3GM4806041** - Rise Range: 30° - 60°													
E.S.P.	T1 HEATING SPEED			T2 HEATING SPEED			T3 HEATING SPEED			T4 COOLING SPEED		T5 COOLING SPEED	
	CFM	WATTS	RISE	CFM	WATTS	RISE	CFM	WATTS	RISE	CFM	WATTS	CFM	WATTS
0.1	1055	156	44	1380	298	33	1415	327	33	1851	679	1780	647
0.2	1000	166	46	1320	312	35	1360	335	34	1803	688	1740	658
0.3	940	173	49	1270	318	36	1305	343	35	1754	696	1695	661
0.4	880	181	52	1220	327	38	1260	353	37	1706	702	1640	679
0.5	825	189	56	1160	336	40	1200	359	38	1665	710	1595	675
0.6	760	204	X	1115	342	41	1150	371	40	1619	719	1550	693
0.7	705	207	X	1060	347	44	1110	375	42	1573	727	1505	690
0.8	625	210	X	1000	361	46	1060	381	44	1528	739	1465	696

DP3GM4808041/43** - Rise Range: 30° - 60°													
E.S.P.	T1 HEATING SPEED			T2 HEATING SPEED			T3 HEATING SPEED			T4 COOLING SPEED		T5 COOLING SPEED	
	CFM	WATTS	RISE	CFM	WATTS	RISE	CFM	WATTS	RISE	CFM	WATTS	CFM	WATTS
0.1	1055	156	58	1380	298	45	1415	327	43	1851	679	1780	647
0.2	1000	166	X	1320	312	47	1360	335	45	1803	688	1740	658
0.3	940	173	X	1270	318	48	1305	343	47	1754	696	1695	661
0.4	880	181	X	1220	327	50	1260	353	49	1706	702	1640	679
0.5	825	189	X	1160	336	53	1200	359	51	1665	710	1595	675
0.6	760	204	X	1115	342	55	1150	371	53	1619	719	1550	693
0.7	705	207	X	1060	347	58	1110	375	55	1573	727	1505	690
0.8	625	210	X	1000	361	X	1060	381	58	1528	739	1465	696

DP3GM4810041** - Rise Range: 35° - 65°													
E.S.P.	T1 HEATING SPEED			T2 HEATING SPEED			T3 HEATING SPEED			T4 COOLING SPEED		T5 COOLING SPEED	
	CFM	WATTS	RISE	CFM	WATTS	RISE	CFM	WATTS	RISE	CFM	WATTS	CFM	WATTS
0.1	1055	156	X	1380	298	56	1570	327	49	1851	679	1780	647
0.2	1000	166	X	1320	312	58	1520	335	51	1803	688	1740	658
0.3	940	173	X	1270	318	61	1480	343	52	1754	696	1695	661
0.4	880	181	X	1220	327	63	1425	353	54	1706	702	1640	679
0.5	825	189	X	1160	336	X	1380	359	56	1665	710	1595	675
0.6	760	204	X	1115	342	X	1335	371	58	1619	719	1550	693
0.7	705	207	X	1060	347	X	1285	375	60	1573	727	1505	690
0.8	625	210	X	1000	361	X	1235	381	62	1528	739	1465	696

X = Heating Temperature Rise Not Recommended.

BLOWER PERFORMANCE DATA

SINGLE / THREE PHASE

DP3GM6108041/43** - Rise Range: 30° - 60°												
E.S.P.	T1 LOW STAGE HEATING SPEED			T2 HIGH STAGE HEATING SPEED			T3 LOW STAGE HEATING SPEED		T4 HIGH STAGE COOLING		T5 COOLING SPEED	
	CFM	WATTS	RISE	CFM	WATTS	RISE	CFM	WATTS	CFM	WATTS	CFM	WATTS
0.1	1285	252	36	1370	297	45	1420	284	2044	757	2107	831
0.2	1235	259	37	1330	304	46	1371	294	1996	770	2060	837
0.3	1180	272	39	1280	314	48	1318	302	1955	779	2015	850
0.4	1130	272	41	1220	321	50	1268	313	1913	785	1972	858
0.5	1085	280	42	1180	341	52	1217	326	1871	796	1930	864
0.6	1035	294	45	1135	339	54	1163	341	1828	803	1888	875
0.7	975	297	47	1085	347	57	1101	347	1788	809	1850	885
0.8	910	319	51	1035	359	59	1041	358	1742	822	1805	889

DP3GM6110041** - Rise Range: 35° - 65°												
E.S.P.	T1 LOW STAGE HEATING SPEED			T2 HIGH STAGE HEATING SPEED			T3 LOW STAGE HEATING SPEED		T4 HIGH STAGE COOLING		T5 COOLING SPEED	
	CFM	WATTS	RISE	CFM	WATTS	RISE	CFM	WATTS	CFM	WATTS	CFM	WATTS
0.1	1175	169	49	1485	311	52	1420	284	2044	757	2107	831
0.2	1115	178	52	1425	317	54	1371	294	1996	770	2060	837
0.3	1045	183	55	1385	331	55	1318	302	1955	779	2015	850
0.4	985	194	59	1350	341	57	1268	313	1913	785	1972	858
0.5	905	199	64	1295	351	59	1217	326	1871	796	1930	864
0.6	840	215	X	1235	359	62	1163	341	1828	803	1888	875
0.7	770	218	X	1180	371	X	1101	347	1788	809	1850	885
0.8	700	229	X	1125	386	X	1041	358	1742	822	1805	889

DP3GM6112041/43** - Rise Range: 35° - 65°												
E.S.P.	T1 LOW STAGE HEATING SPEED			T2 HIGH STAGE HEATING SPEED			T3 LOW STAGE HEATING SPEED		T4 HIGH STAGE COOLING		T5 COOLING SPEED	
	CFM	WATTS	RISE	CFM	WATTS	RISE	CFM	WATTS	CFM	WATTS	CFM	WATTS
0.1	1,345	281	51	1,745	558	53	1420	284	2044	757	2107	831
0.2	1,300	286	53	1,705	567	54	1371	294	1996	770	2060	837
0.3	1,255	295	55	1,660	572	56	1318	302	1955	779	2015	850
0.4	1,205	308	57	1,620	582	57	1268	313	1913	785	1972	858
0.5	1,165	322	59	1,580	589	58	1217	326	1871	796	1930	864
0.6	1,110	335	62	1,535	604	60	1163	341	1828	803	1888	875
0.7	1,055	334	X	1,485	613	62	1101	347	1788	809	1850	885
0.8	1,010	346	X	1,435	606	64	1041	358	1742	822	1805	889

X = Heating Temperature Rise Not Recommended.

BLOWER PERFORMANCE DATA

DP5GM2406041** - Rise Range: 25° - 55°						
Tap	Low Cool	High Cool	Low Heat		High Heat	
			CFM	Rise	CFM	Rise
A-	505	675	540	63	720	63
A	565	750	600	56	800	56
A+	620	825	660	51	880	51
B-	540	720	610	55	810	56
B	600	800	675	50	900	50
B+	660	880	745	45	990	45
C-	560	745	660	51	880	51
C	620	825	735	46	980	46
C+	685	910	810	42	1075	42
D-	575	765	x	x	x	x
D	640	850	x	x	x	x
D+	700	935	x	x	x	x

DP5GM3008041** - Rise Range: High Fire 35° - 65° Low Fire 25° - 55°						
Tap	Low Cool	High Cool	Low Heat		High Heat	
			CFM	Rise	CFM	Rise
A-	545	810	720	63	960	63
A	605	900	800	56	1065	56
A+	665	990	880	51	1170	51
B-	605	900	810	56	1075	56
B	670	1000	900	50	1195	50
B+	735	1100	990	45	1315	46
C-	650	970	900	50	1195	50
C	720	1075	1000	45	1330	45
C+	795	1185	1100	41	1465	41
D-	665	990	x	x	x	x
D	735	1100	x	x	x	x
D+	810	1210	x	x	x	x

DP5GM3608041** - Rise Range: 35° - 65°						
Tap	Low Cool	High Cool	Low Heat		High Heat	
			CFM	Rise	CFM	Rise
A-	680	1015	720	63	960	63
A	755	1125	800	56	1065	56
A+	830	1240	880	51	1170	51
B-	725	1080	810	56	1075	56
B	805	1200	900	50	1195	50
B+	885	1320	990	45	1315	46
C-	755	1125	900	50	1195	50
C	840	1250	1000	45	1330	45
C+	920	1375	1100	41	1465	41
D-	800	1195	x	x	x	x
D	890	1325	x	x	x	x
D+	980	1460	x	x	x	x

DP5GM4210041** - Rise Range: 35° - 65°						
Tap	Low Cool	High Cool	Low Heat		High Heat	
			CFM	Rise	CFM	Rise
A-	970	1170	915	61	1215	62
A	1080	1300	1015	55	1350	56
A+	1185	1430	1115	50	1485	51
B-	1045	1260	1015	55	1350	56
B	1160	1400	1125	50	1495	50
B+	1280	1540	1240	45	1650	45
C-	1085	1305	1125	50	1495	50
C	1205	1450	1250	45	1665	45
C+	1325	1595	1375	41	1830	41
D-	1120	1350	x	x	x	x
D	1245	1500	x	x	x	x
D+	1370	1650	x	x	x	x

DP5GM54810041** - Rise Range: 35°- 65°						
Tap	Low Cool	High Cool	Low Heat		High Heat	
			CFM	Rise	CFM	Rise
A-	1150	1305	900	63	1195	63
A	1275	1450	1000	56	1330	56
A+	1405	1595	1100	51	1465	51
B-	1190	1350	1015	55	1350	56
B	1320	1500	1125	50	1495	50
B+	1450	1650	1240	45	1650	45
C-	1230	1395	1125	50	1495	50
C	1365	1550	1250	45	1665	45
C+	1500	1705	1375	41	1830	41
D-	1265	1440	x	x	x	x
D	1410	1600	x	x	x	x
D+	1550	1760	x	x	x	x

X = Outside of Temperature Rise Range - Not Recommended.

BLOWER PERFORMANCE DATA

DP5GM CFM Output and dip switch settings

		CFM Output for DIP Switches 1-2 / Heating				CFM Output for DIP Switches 5-6 / Cooling			
MODEL	**SPEED TAP**	**Switch 1**	**Switch 2**	**Low Heat CFM**	**High Heat CFM**	**Switch 5**	**Switch 6**	**Low Cool CFM**	**High Cool CFM**
DP5GM2406041**	A	Off	OFF	600	800	OFF	OFF	565	750
	B	On	off	675	900	on	off	600	800
	C	off	on	735	980	off	on	620	825
	D	on	on	x	x	on	on	640	850
DP5GM3008041**	a	off	off	800	1065	off	off	605	900
	b	on	off	900	1195	on	off	670	1000
	c	off	on	1000	1330	off	on	720	1075
	d	on	on	x	x	on	on	735	1100
DP5GM3608041**	a	off	off	800	1065	off	off	755	1125
	b	on	off	900	1195	on	off	805	1200
	c	off	on	1000	1330	off	on	840	1250
	d	on	on	x	x	on	on	890	1325
DP5GM4210041**	A	off	off	1015	1350	off	off	1080	1300
	b	on	off	1125	1495	on	off	1160	1400
	c	off	on	1250	1665	off	on	1205	1450
	d	on	on	x	x	on	on	1245	1500
DP5GM4810041**	a	off	off	1015	1350	off	off	1275	1450
	b	on	off	1125	1495	on	off	1320	1500
	c	off	on	1250	1665	off	on	1365	1550
	d	on	on	x	x	on	on	1410	1600

x = Not recommended for heating application

DIP Switch Settings for Single and Two-Stage Thermostats

MODEL	Switch 3	Switch 4	Thermostat
DP5GM**	N/A	on	Single Stage
	n/a	off	Two-Stage

Adjustments Through Dip Switch Combinations 7-8

CFM	Switch 7	switch 8
+10%	on	off
Normal	off	off
-10%	off	on

TROUBLESHOOTING

TROUBLESHOOTING

Ignition Control Error Codes

The following presents probable causes of questionable unit operation. Refer to Diagnostic Indicator Chart for an interpretation of the signal and to this section for an explanation.

Remove the control box access panel and note the number of diagnostic LED flashes. Refer to Diagnostic Indicator Chart for an interpretation of the signal and to this section for an explanation.

Fault Recall (Two-Stage Models ONLY)

The ignition control is equipped with a momentary push-button switch that can be used to display on the diagnostic LED the last five faults detected by the control. The control must be in Standby Mode (no thermostat inputs) to use the feature. Depress the push-button switch for approximately 2 seconds. **NOTE:** Do not hold for longer than 4 seconds. Holding the button for 4 seconds or higher will erase the memory! Release the switch when the LED is turned off. The diagnostic LED will then display the flash codes associated with the last five detected faults. The order of display is the most recent fault to the least recent fault.

Abnormal Operation - Heating

Internal Control Failure

If the integrated ignition control in this unit encounters an internal fault, it will go into a "hard" lockout and turn off the diagnostic LED. If diagnostic LED indicates an internal fault, check power supply to unit for proper voltage, check all fuses, circuit breakers and wiring. Disconnect electric power for five seconds. If LED remains off after restoring power, replace control.

External Lockout

An external lockout occurs if the integrated ignition control determines that a measurable combustion cannot be established within three (3) consecutive ignition attempts. If flame is not established within the seven (7) second trial for ignition, the gas valve is de-energized, 15 second inter-purge cycle is completed, and ignition is reattempted. The control will repeat this routine three times if a measurable combustion is not established. The control will then shut off the induced draft blower and go into a lockout state. If flame is established but lost, the control will energize the circulator blower at the heat speed and then begin a new ignition sequence. If flame is established then lost on subsequent attempts, the control will recycle for four (4) consecutive ignition attempts (five attempts total) before locking out.

The diagnostic fault code is 1 flash for a lockout due to failed ignition attempts or flame dropouts. The integrated control will automatically reset after one hour, or it can be reset by removing the thermostat signal or disconnecting the electrical power supply for over five seconds. If the diagnostic LED indicates an external lockout, perform the following checks:

- *Check the supply and manifold pressures*
- *Check the gas orifices for debris*
- *Check gas valve for proper operation*
- *Check secondary limit*

A dirty filter, excessive duct static, insufficient air flow, a faulty limit, or a failed circulator blower can cause this limit to open. Check filters, total external duct static, circulator blower motor, blower motor speed tap (see wiring diagram), and limit. An interruption in electrical power during a heating cycle may also cause the auxiliary limit to open. The automatic reset secondary limit is located on top of the circulator blower assembly.

- *Check rollout limit*

If the burner flames are not properly drawn into the heat exchanger, the flame rollout protection device will open. Possible causes are restricted or blocked flue passages, blocked or cracked heat exchanger, a failed induced draft blower, or insufficient combustion air. The rollout protection device is a manual reset limit located on the burner bracket. The cause of the flame rollout must be determined and corrected before resetting the limit.

- *Check flame sensor*

A drop in flame signal can be caused by nearly invisible coating on the sensor. Remove the sensor and carefully clean with steel wool.

- *Check wiring*
  Check wiring for opens/shorts and miswiring.

IMPORTANT: If you have to frequently reset your gas/electric package unit, it means that a problem exists that should be corrected. Contact a qualified servicer for further information.

Pressure Switch Stuck Open

A pressure switch stuck open can be caused by a faulty pressure switch, faulty wiring, a disconnected or damaged hose, a blocked or restricted flue, or a faulty induced draft blower.

If the control senses an open pressure switch during the pre-purge cycle, the induced draft blower only will be energized. If the pressure switch opens after ignition has begun the gas valve is de-energized, the circulator blower heat off cycle begins, and the induced draft blower remains on. The diagnostic fault code is two flashes.

TROUBLESHOOTING

Pressure Switch Stuck Closed
A stuck closed pressure switch can be caused by a faulty pressure switch or faulty wiring. If the control encounters a pressure switch stuck closed, the induced draft blower remains off. The diagnostic LED code for this fault is three (3) flashes.

Open Thermal Protection Device
If the primary limit switch opens, the gas valve is immediately de-energized, the induced draft and air circulating blowers are energized. The induced draft and air circulator blowers remain energized until the limit switch recloses. The diagnostic fault code for an open limit is four (4) flashes.

A primary limit will open due to excessive supply air temperatures. This can be caused by a dirty filter, excessive duct static, insufficient air flow, or a faulty limit. Check filters, total external duct static, blower motor, blower motor speed tap (see wiring diagram), and limit. This limit will automatically reset once the temperature falls below a preset level.

Primary Limit
A primary limit will open due to excessive supply air temperatures. This can be caused by a dirty filter, excessive duct static, insufficient air flow, or a faulty limit. Check filters, total external duct static, blower motor, blower motor speed tap (see wiring diagram), and limit. This limit will automatically reset once the temperature falls below a preset level.

Auxiliary/Secondary Limit
A dirty filter, excessive duct static, insufficient air flow, a faulty limit, or a failed circulator blower can cause this limit to open. Check filters, total external duct static, circulator blower motor, blower motor speed tap (see wiring diagram), and limit. An interruption in electrical power during a heating cycle may also cause the auxiliary limit to open. The automatic reset secondary limit is located on top of the circulator blower assembly.

Rollout Limit
If the burner flames are not properly drawn into the heat exchanger, the flame rollout protection device will open. Possible causes are restricted or blocked flue passages, blocked or cracked heat exchanger, a failed induced draft blower, or insufficient combustion air. The rollout protection device is a manual reset limit located on the burner bracket. The cause of the flame rollout must be determined and corrected before resetting the limit.

Flame Detected with Gas Valve Closed
If flame is detected with the gas valve de-energized, the combustion and air circulator blowers are energized. The diagnostic fault code is five (5) flashes for this condition. The control can be reset by removing the power supply to the unit or it will automatically reset after one hour. Miswiring is the probable cause for this fault.

Low Flame Signal (Two-Stage Models ONLY)
Under some conditions, the fuel or air supply can create a nearly invisible coating on the flame sensor. This coating acts as an insulator causing a drop in the flame signal. If the flame signal drops below a predetermined value, the ignition control will display an error code of (1) flash on the amber diagnostic LED. The unit will continue to operate until the control can no longer detect flame.

Abnormal Operation - Cooling

Short Cycle Compressor Delay
The automatic ignition control has a built-in feature that prevents damage to the compressor in short cycling situations. In the event of intermittent power losses or intermittent thermostat operation, the ignition control will delay output to the compressor contactor for three minutes from the time power is restored. (Compressor is off a total of three minutes). The diagnostic LED will flash six (6) times to indicate the compressor contactor output is being delayed.

NOTE: Some electronic thermostats also have a built-in compressor short cycle timer that may be longer than the three minute delay given above. If you are using an electronic thermostat and the compressor has not started after three minutes, wait an additional five minutes to allow the thermostat to complete its short cycle delay time.

High Pressure Switch/Low Pressure Switch
(5-Ton Models ONLY)
Some models include a high pressure cutout switch and/or a loss of charge cutout switch. The high pressure cutout switch protects the refrigeration system from excessive operating pressures. The loss of charge cutout switch protects the refrigeration system from very low operating pressures due to a loss of refrigerant. Compressor operation will be disabled if either of these devices opens. If either device opens, the diagnostic red LED will flash (9) times to indicate that a refrigeration system pressure switch is open.

TROUBLESHOOTING

IGNITION CONTROL DIAGNOSTIC INDICATOR CHART (SINGLE STAGE MODELS ONLY)

Red Light Signal	Refer to Abnormal Heating or Cooling Operation Sections of this Manual
Off	Internal Control Failure
1 Flash	External Lockout
2 Flashes	Pressure Switch Stuck Open
3 Flashes	Pressure Switch Stuck Closed
4 Flashes	Thermal Protection Device Open
5 Flashes	Flame Detected with Gas Valve Closed
6 Flashes	Short Cycle Compressor Delay (Cooling Only)

HEATING TIMING CHART

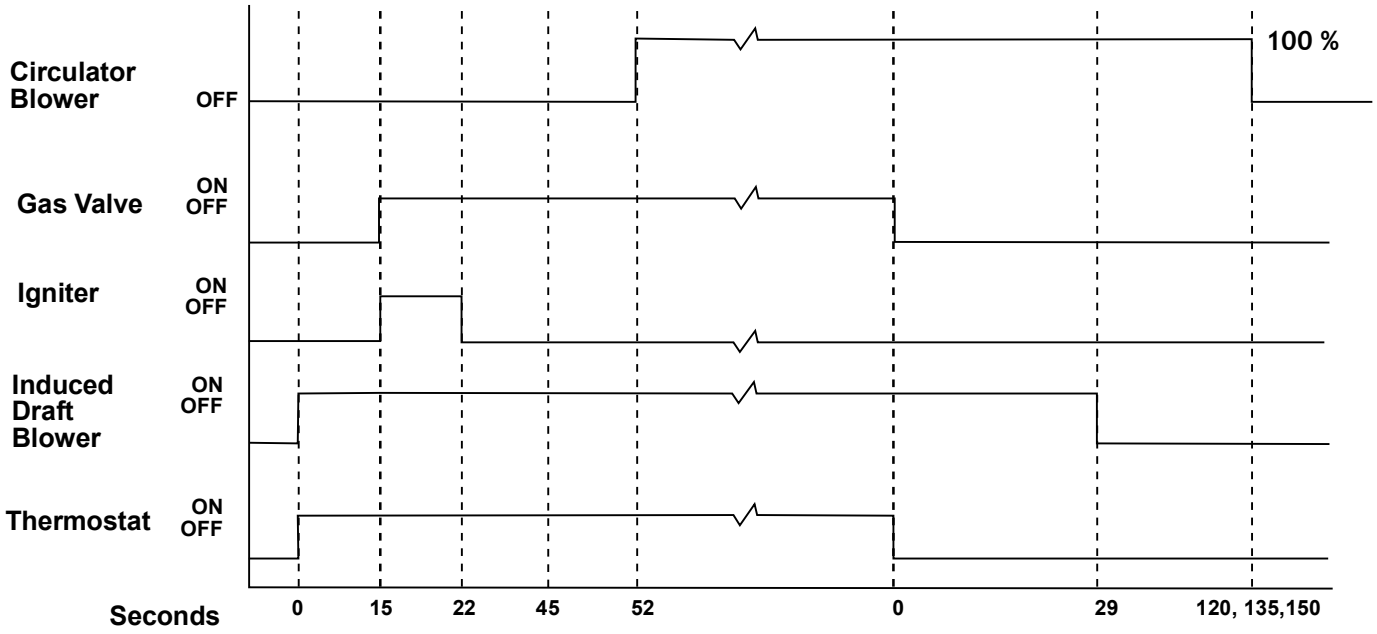

COOLING TIMING CHART

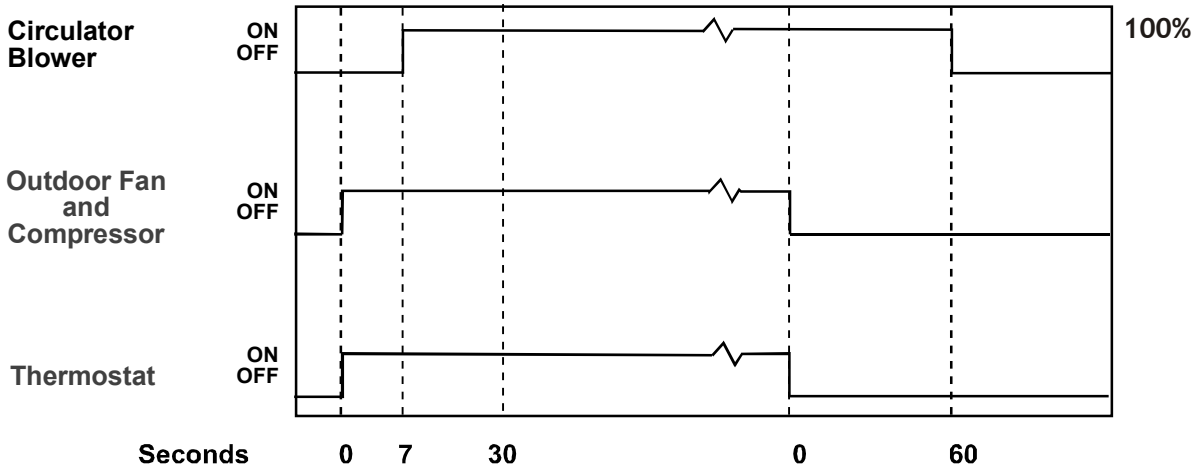

TROUBLESHOOTING

IGNITION CONTROL DIAGNOSTIC INDICATOR CHART (TWO-STAGE MODELS ONLY)

Red Light Signal	Refer to Abnormal Heating or Cooling Operation Sections of this Manual
Off	Internal Control Failure
1 Flash	External Lockout
2 Flashes	Pressure Switch Stuck Open
3 Flashes	Pressure Switch Stuck Closed
4 Flashes	Thermal Protection Device Open
5 Flashes	Flame Detected with Gas Valve Closed
6 Flashes	Short Cycle Compressor Delay (Cooling Only)
7 Flashes	Limit Opened Five (5) Times Within The Same Call For Heat
8 Flashes	Indoor/Outdoor Thermostat Open (Cooling Only; Devices Not present On All Models)
9 Flashes	High Pressure/Loss of Charge Switch Open (Cooling Only; Devices Not Present On All Models)

Amber Light Signal	Refer to Abnormal Heating or Cooling Operation Sections of this Manual
Off	No Flame Present
On	Normal Flame
1 Flash	Low Flame Current
2 Flashes	Flame Detected with Gas Valve De-energized.

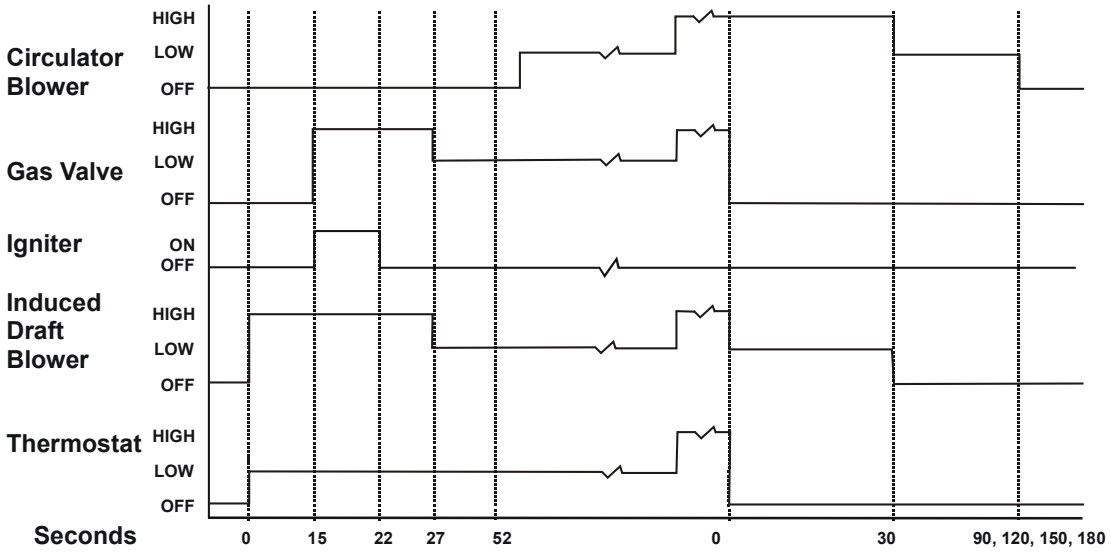

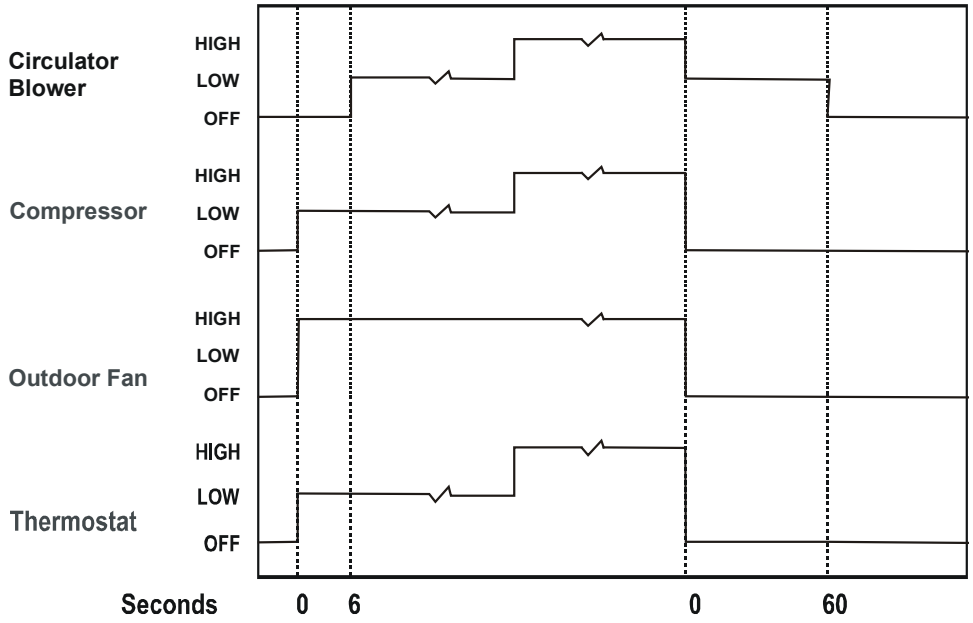

MAINTENANCE

MAINTENANCE

WARNING

High Voltage!
Disconnect all power before servicing or installing. Multiple power sources may be present. Failure to do so may cause property damage, personal injury or death.

Have the gas heating section of the unit checked at least once a year before the heating season begins, to be sure that the combustion air inlet and flue outlet hoods are not blocked by debris, which would prevent adequate combustion air and a properly operating vent system.

Filter Replacement or Cleaning

A return air filter is not supplied with this unit; however, there must be a means of filtering all of the return air. The filter(s) may be located in the return air duct(s), or return air filter grille(s). Consult with your installing dealer for the actual location of the return air filter(s) for your unit. Dirty filters are the most common cause of inadequate heating or cooling performance. Filter inspection should be made at least every two months; more often if necessary because of local conditions and usage.

Dirty throwaway filters should be discarded and replaced with a new, clean filter. Dirty permanent filters should be washed with water, thoroughly dried and sprayed with a filter adhesive before being reinstalled (Filter adhesives may be found at many hardware stores). Permanent filters should last several years. However, should one become torn or uncleanable, it should be replaced.

Cabinet Finish Maintenance

Use a fine grade automotive wax on the cabinet finish to maintain the finish's original high luster. This is especially important in installations with extended periods of direct sunlight.

Clean Outside Coil (Qualified Servicer Only)

The coil with the outside air flowing over it should be inspected annually and cleaned as frequently as necessary to keep the finned areas free of lint, hair and debris.

Condenser, Evaporator, and Induced Draft Motors

Bearings on the air circulating blower motor, condenser motor and the combustion fan motor are permanently lubricated. No additional oiling is required.

Flame Sensor (Qualified Servicer Only)

A drop in the flame current can be caused by a nearly invisible coating on the flame sensor. This coating, created by the fuel or combustion air supply, can be removed by carefully cleaning the flame sensor with steel wool. **NOTE:** After cleaning, the microamp signal should be stable and in the range of 4 - 6 microamps DC.

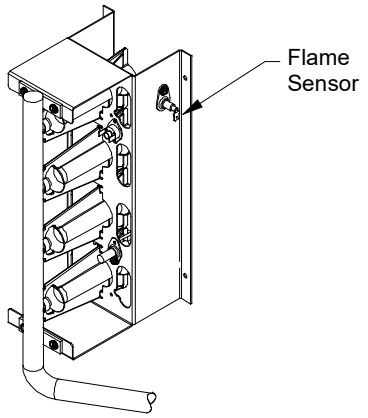

Flame Sensor

Flue Passages (Qualified Servicer Only)

At the start of each heating season, inspect and, if necessary, clean the unit flue passage.

Cleaning Flue Passages (Qualified Servicer Only)

1. Shut off electric power and gas supply to the unit.
2. Remove burner assembly by disconnecting the gas line and removing the manifold bracket from the partition panel.
3. Remove the flue from the induced draft blower and the collector box cover from the partition panel.
4. The primary heat exchanger tubes can be cleaned using a round wire brush attached to a length of high grade stainless steel cable, such as drain cleanout cable. Attach a variable speed reversible drill to the other end of the spring cable. Slowly rotate the cable with the drill and insert it into one of the primary heat exchanger tubes. While reversing the drill, work the cable in and out several times to obtain sufficient cleaning. Use a large cable for the large tube, and then repeat the operation with a small cable for the smaller tube. Repeat for each tube.

5. When all heat exchanger tubes have been cleaned, replace the parts in the reverse order in which they were removed.
6. To reduce the chances of repeated fouling of the heat exchanger, perform the steps listed in “Startup, Adjustments, and Checks”.

Main Burner Flame (Qualified Servicer Only)

Flames should be stable, soft and blue (dust may cause orange tips but must not be yellow). The flames must extend directly outward from the burner without curling, floating or lifting off.

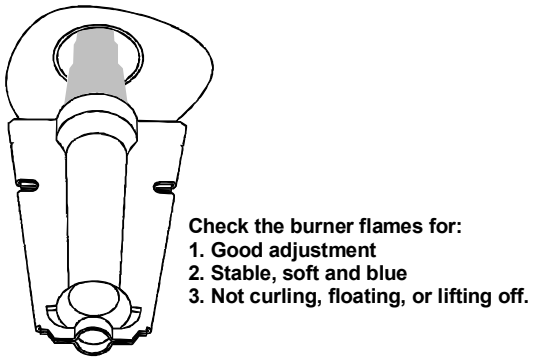

Burner Flame

WARNING

To avoid personal injury or death due to electrical shock, do not remove any internal compartment covers or attempt any adjustment. Contact a qualified servicer at once if an abnormal flame should develop.

At least once a year, prior to or during the heating season, make a visual check of the burner flames.

NOTE: This will involve removing and reinstalling the heat exchanger door on the unit, which is held by two screws. If you are uncertain about your ability to do this, contact a qualified servicer.

If a strong wind is blowing, it may alter the airflow pattern within the unit enough that an inspection of the burner flames is not possible.

Cleaning Burners

1. Shut off electric power and gas supply to the unit.
2. Remove the screws securing the manifold to the burner retention bracket. Remove the manifold and rotate each burner counterclockwise to remove.

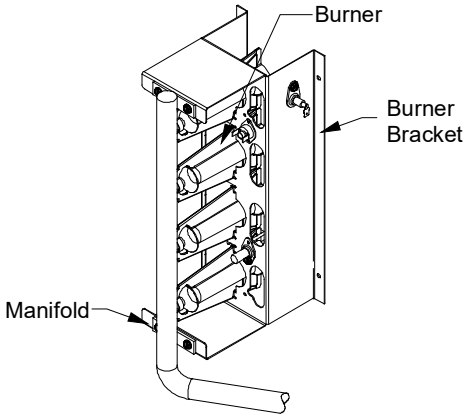

Manifold Assembly

3. Remove the burners.
4. Use a bottle brush to clean burner insert and inside of the burners.
5. Replace burners and manifold, inspect the burner assembly for proper seating of burners in retention slots.
6. Reconnect electrical power and gas supply.

CAUTION

Label all wires prior to disconnection when servicing controls. Wiring errors can cause improper and dangerous operation.

CAUTION

Always verify proper operation after servicing.

For further information on the yearly inspection, consult the User Manual. It is recommended that a qualified servicer inspect and service the unit at least once each year.

Turn the unit on at the thermostat. Wait a few minutes, since any dislodged dust will alter the normal flame appearance. Flames should be predominantly blue and directed into the tubes. They should not be yellow. They should extend directly outward from the burner ports without curling downward, floating or lifting off the ports.

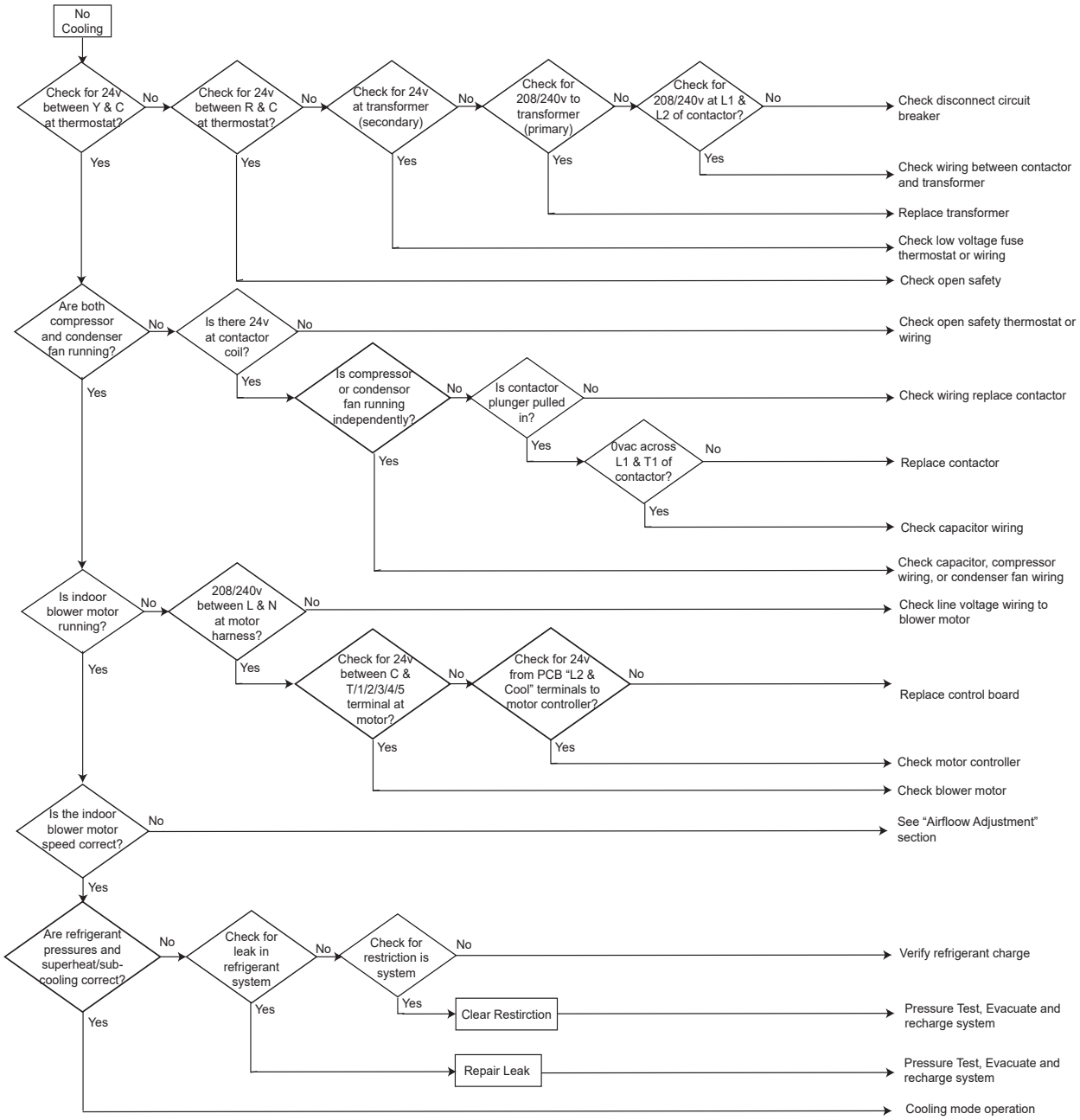
No Cooling
Check for 24v between Y & C at thermostat?
No
Yes
Check for 24v between R & C at thermostat?
No
Yes
Check for 24v at transformer (secondary)
No
Yes
Check for 208/240v to transformer (primary)
No
Yes
Check for 208/240v at L1 & L2 of contactor?
No
Yes
Check disconnect circuit breaker
Check wiring between contactor and transformer
Replace transformer
Check low voltage fuse thermostat or wiring
Check open safety
Are both compressor and condenser fan running?
No
Yes
Is there 24v at contactor coil?
No
Yes
Check open safety thermostat or wiring
Is compressor or condensor fan running independently?
No
Yes
Is contactor plunger pulled in?
No
Yes
Check wiring replace contactor
0vac across L1 & T1 of contactor?
No
Yes
Replace contactor
Check capacitor wiring
Check capacitor, compressor wiring, or condenser fan wiring
Is indoor blower motor running?
No
Yes
208/240v between L & N at motor harness?
No
Yes
Check line voltage wiring to blower motor
Check for 24v between C & T/1/2/3/4/5 terminal at motor?
No
Yes
Check for 24v from PCB "L2 & Cool" terminals to motor controller?
No
Yes
Replace control board
Check motor controller
Check blower motor
Is the indoor blower motor speed correct?
No
Yes
See "Airfloow Adjustment" section
Are refrigerant pressures and superheat/sub-cooling correct?
No
Yes
Check for leak in refrigerant system
No
Yes
Check for restriction is system
No
Yes
Verify refrigerant charge
Clear Restirction
Pressure Test, Evacuate and recharge system
Repair Leak
Pressure Test, Evacuate and recharge system
Cooling mode operation

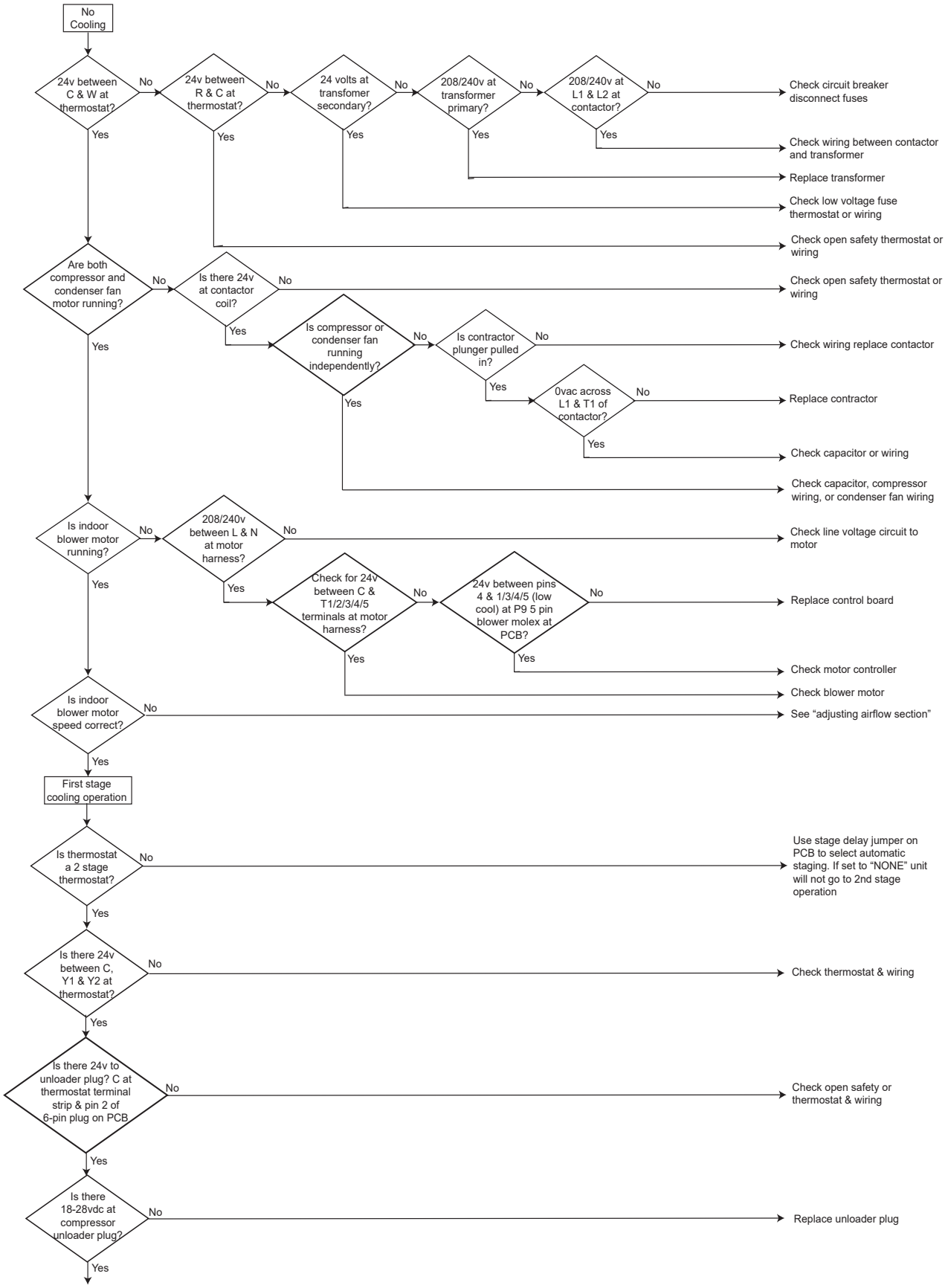
No Cooling
24v between C & W at thermostat?
24v between R & C at thermostat?
24 volts at transfomer secondary?
208/240v at transformer primary?
208/240v at L1 & L2 at contactor?
Check circuit breaker disconnect fuses
Check wiring between contactor and transformer
Replace transformer
Check low voltage fuse thermostat or wiring
Check open safety thermostat or wiring
Are both compressor and condenser fan motor running?
Is there 24v at contactor coil?
Check open safety thermostat or wiring
Is compressor or condenser fan running independently?
Is contractor plunger pulled in?
Check wiring replace contactor
0vac across L1 & T1 of contactor?
Replace contractor
Check capacitor or wiring
Check capacitor, compressor wiring, or condenser fan wiring
Is indoor blower motor running?
208/240v between L & N at motor harness?
Check line voltage circuit to motor
Check for 24v between C & T1/2/3/4/5 terminals at motor harness?
24v between pins 4 & 1/3/4/5 (low cool) at P9 5 pin blower molex at PCB?
Replace control board
Check motor controller
Check blower motor
Is indoor blower motor speed correct?
See “adjusting airflow section”
First stage cooling operation
Is thermostat a 2 stage thermostat?
Use stage delay jumper on PCB to select automatic staging. If set to “NONE” unit will not go to 2nd stage operation
Is there 24v between C, Y1 & Y2 at thermostat?
Check thermostat & wiring
Is there 24v to unloader plug? C at thermostat terminal strip & pin 2 of 6-pin plug on PCB
Check open safety or thermostat & wiring
Is there 18-28vdc at compressor unloader plug?
Replace unloader plug
Yes
No

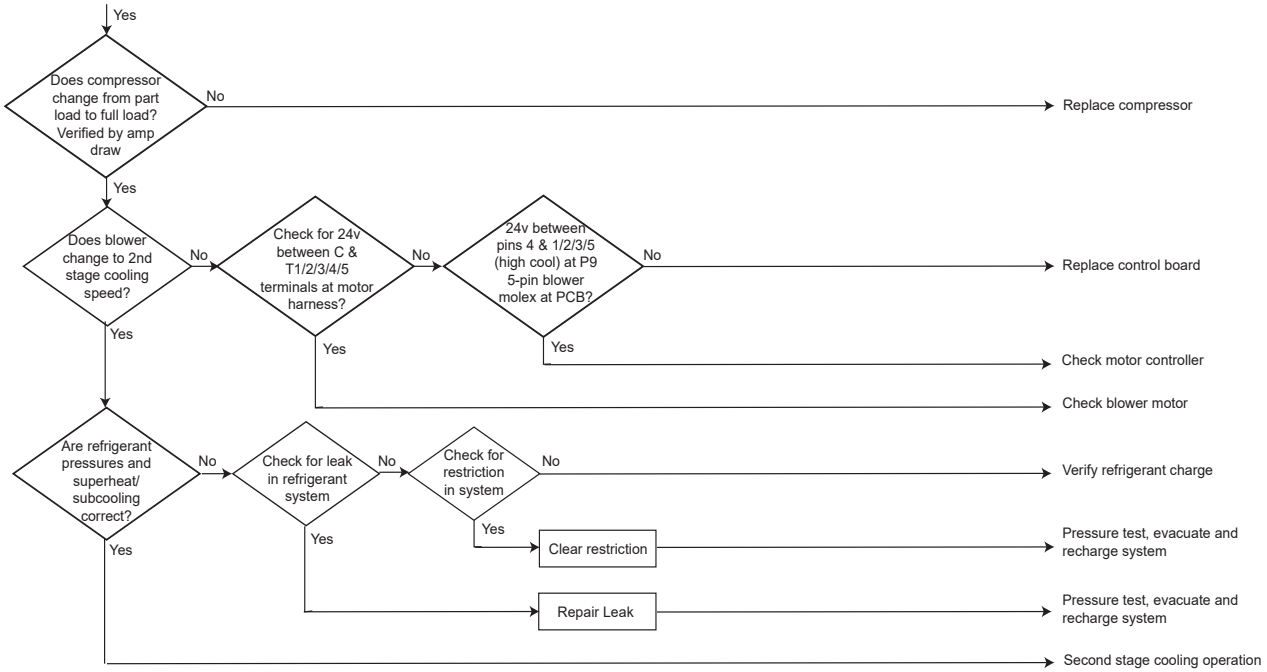
Yes
Does compressor change from part load to full load? Verified by amp draw
No
Replace compressor
Yes
Does blower change to 2nd stage cooling speed?
No
Check for 24v between C & T1/2/3/4/5 terminals at motor harness?
No
24v between pins 4 & 1/2/3/5 (high cool) at P9 5-pin blower molex at PCB?
No
Replace control board
Yes
Yes
Check motor controller
Yes
Check blower motor
Are refrigerant pressures and superheat/ subcooling correct?
No
Check for leak in refrigerant system
No
Check for restriction in system
No
Verify refrigerant charge
Yes
Yes
Clear restriction
Pressure test, evacuate and recharge system
Yes
Repair Leak
Pressure test, evacuate and recharge system
Second stage cooling operation

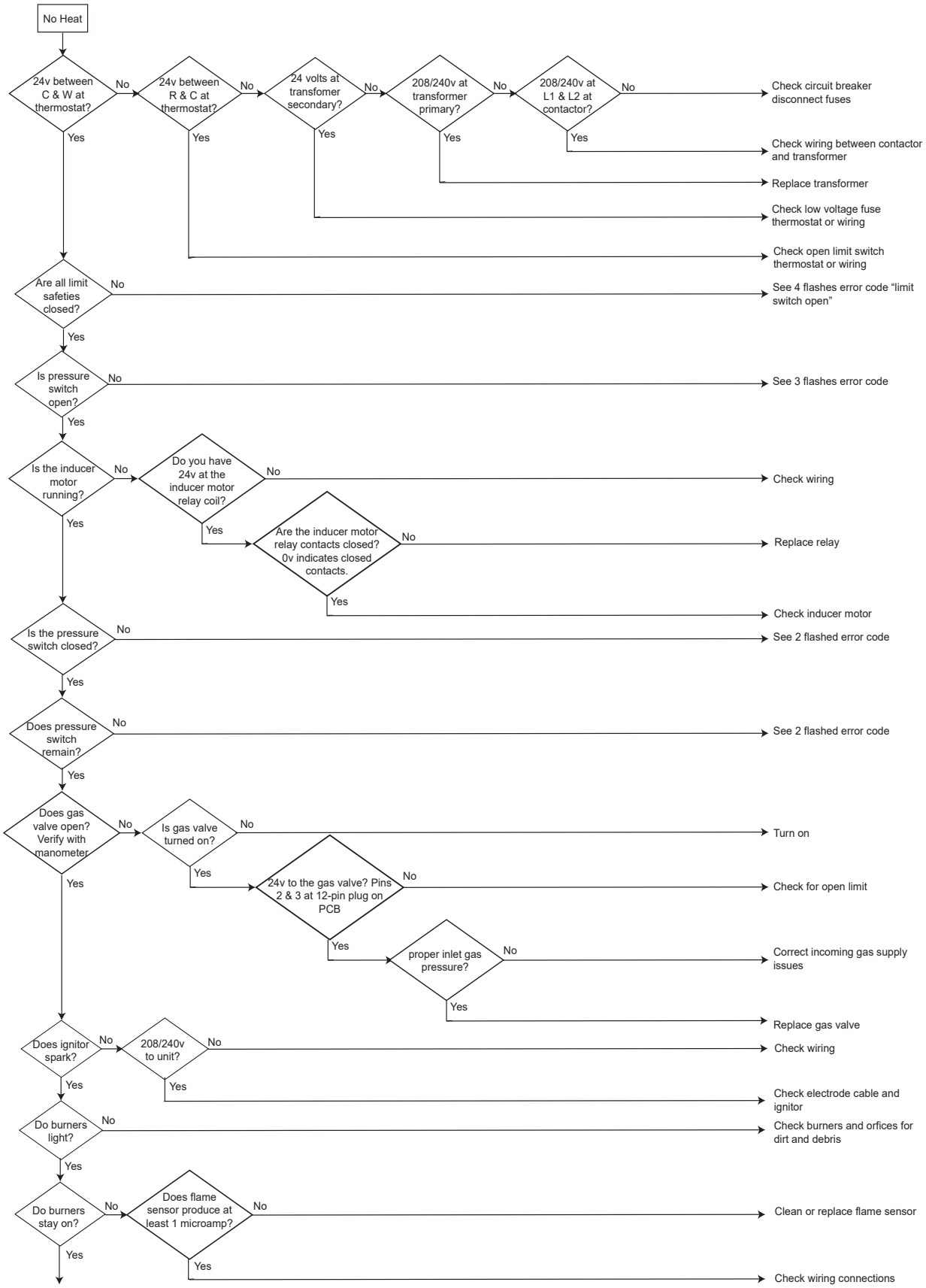
No Heat
24v between C & W at thermostat?
No
24v between R & C at thermostat?
No
24 volts at transfomer secondary?
No
208/240v at transformer primary?
No
208/240v at L1 & L2 at contactor?
No
Check circuit breaker disconnect fuses
Yes
Yes
Yes
Yes
Yes
Check wiring between contactor and transformer
Replace transformer
Check low voltage fuse thermostat or wiring
Check open limit switch thermostat or wiring
Are all limit safeties closed?
No
See 4 flashes error code "limit switch open"
Yes
Is pressure switch open?
No
See 3 flashes error code
Yes
Is the inducer motor running?
No
Do you have 24v at the inducer motor relay coil?
No
Check wiring
Yes
Yes
Are the inducer motor relay contacts closed? 0v indicates closed contacts.
No
Replace relay
Yes
Check inducer motor
Is the pressure switch closed?
No
See 2 flashed error code
Yes
Does pressure switch remain?
No
See 2 flashed error code
Yes
Does gas valve open? Verify with manometer
No
Is gas valve turned on?
No
Turn on
Yes
Yes
24v to the gas valve? Pins 2 & 3 at 12-pin plug on PCB
No
Check for open limit
Yes
proper inlet gas pressure?
No
Correct incoming gas supply issues
Yes
Replace gas valve
Does ignitor spark?
No
208/240v to unit?
No
Check wiring
Yes
Yes
Check electrode cable and ignitor
Do burners light?
No
Check burners and orfices for dirt and debris
Yes
Do burners stay on?
No
Does flame sensor produce at least 1 microamp?
No
Clean or replace flame sensor
Yes
Yes
Check wiring connections

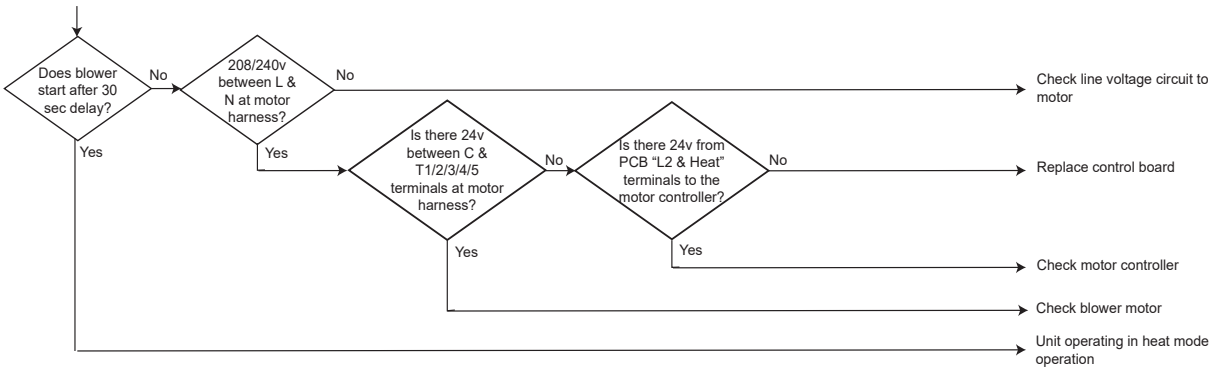
Does blower start after 30 sec delay?
No
Yes
208/240v between L & N at motor harness?
No
Yes
Check line voltage circuit to motor
Is there 24v between C & T1/2/3/4/5 terminals at motor harness?
No
Yes
Is there 24v from PCB "L2 & Heat" terminals to the motor controller?
No
Yes
Replace control board
Check motor controller
Check blower motor
Unit operating in heat mode operation

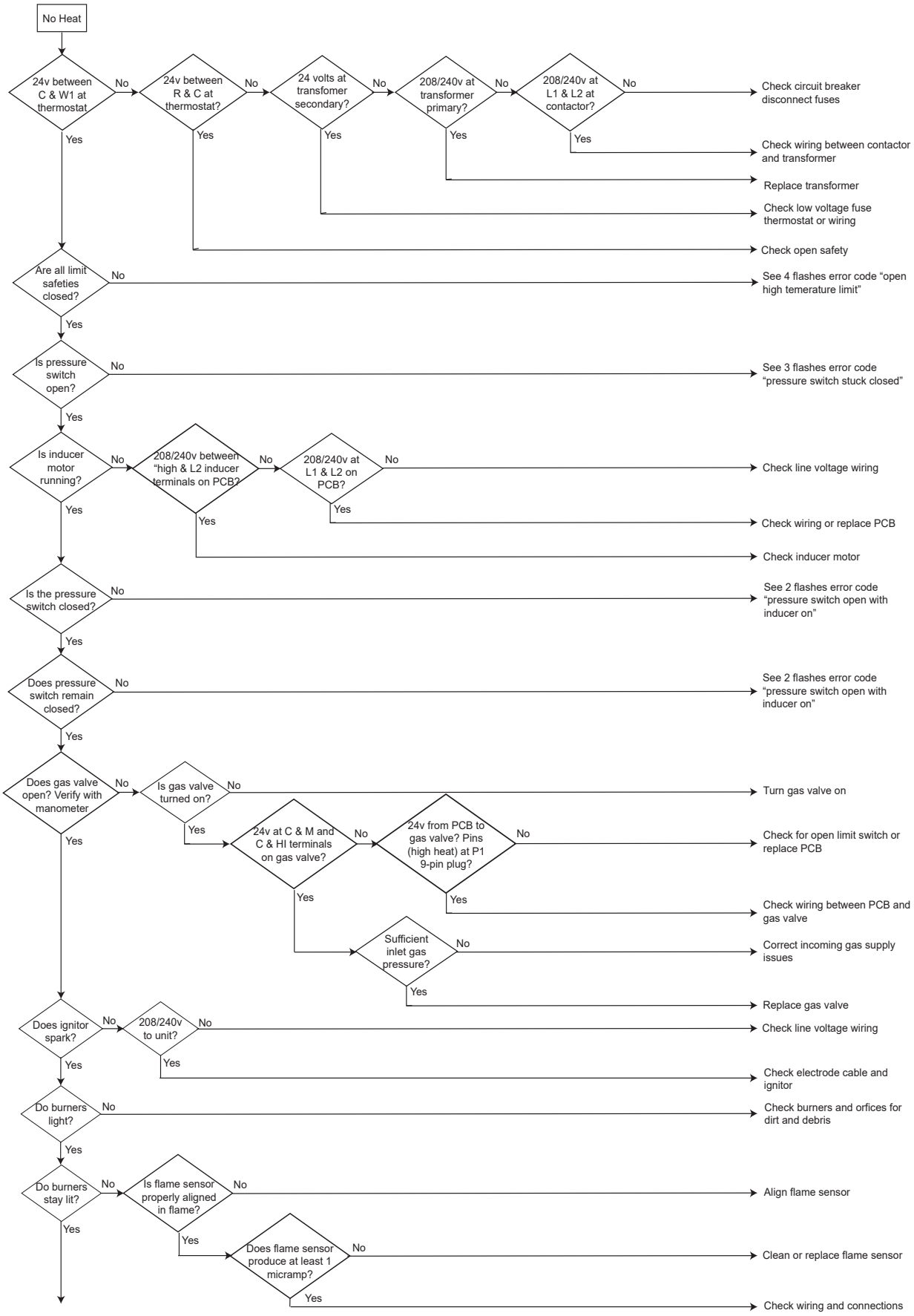
No Heat
24v between C & W1 at thermostat
No
24v between R & C at thermostat?
No
24 volts at transfomer secondary?
No
208/240v at transformer primary?
No
208/240v at L1 & L2 at contactor?
No
Check circuit breaker disconnect fuses
Yes
Check wiring between contactor and transformer
Yes
Replace transformer
Yes
Check low voltage fuse thermostat or wiring
Yes
Check open safety
Yes
Are all limit safeties closed?
No
See 4 flashes error code "open high temerature limit"
Yes
Is pressure switch open?
No
See 3 flashes error code "pressure switch stuck closed"
Yes
Is inducer motor running?
No
208/240v between "high & L2 inducer terminals on PCB?
No
208/240v at L1 & L2 on PCB?
No
Check line voltage wiring
Yes
Check wiring or replace PCB
Yes
Check inducer motor
Yes
Is the pressure switch closed?
No
See 2 flashes error code "pressure switch open with inducer on"
Yes
Does pressure switch remain closed?
No
See 2 flashes error code "pressure switch open with inducer on"
Yes
Does gas valve open? Verify with manometer
No
Is gas valve turned on?
No
Turn gas valve on
Yes
24v at C & M and C & HI terminals on gas valve?
No
24v from PCB to gas valve? Pins (high heat) at P1 9-pin plug?
No
Check for open limit switch or replace PCB
Yes
Check wiring between PCB and gas valve
Yes
Sufficient inlet gas pressure?
No
Correct incoming gas supply issues
Yes
Replace gas valve
Yes
Does ignitor spark?
No
208/240v to unit?
No
Check line voltage wiring
Yes
Check electrode cable and ignitor
Yes
Do burners light?
No
Check burners and orfices for dirt and debris
Yes
Do burners stay lit?
No
Is flame sensor properly aligned in flame?
No
Align flame sensor
Yes
Does flame sensor produce at least 1 micramp?
No
Clean or replace flame sensor
Yes
Check wiring and connections

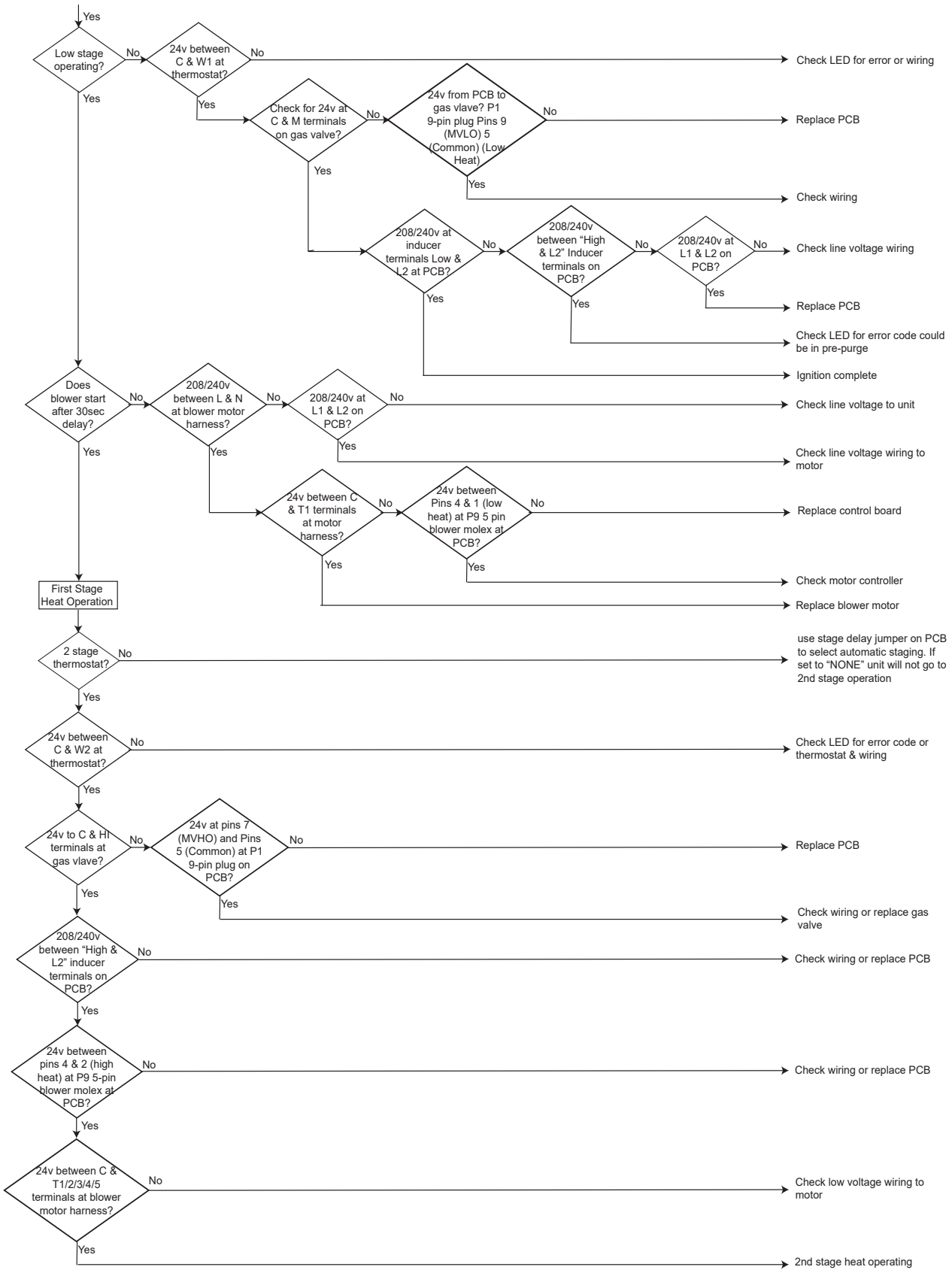
Yes
Low stage operating?
No
24v between C & W1 at thermostat?
No
Check LED for error or wiring
Yes
Yes
Check for 24v at C & M terminals on gas valve?
No
24v from PCB to gas vlave? P1 9-pin plug Pins 9 (MVLO) 5 (Common) (Low Heat)
No
Replace PCB
Yes
Yes
Check wiring
208/240v at inducer terminals Low & L2 at PCB?
No
208/240v between "High & L2" Inducer terminals on PCB?
No
208/240v at L1 & L2 on PCB?
No
Check line voltage wiring
Yes
Yes
Yes
Replace PCB
Check LED for error code could be in pre-purge
Ignition complete
Does blower start after 30sec delay?
No
208/240v between L & N at blower motor harness?
No
208/240v at L1 & L2 on PCB?
No
Check line voltage to unit
Yes
Yes
Yes
Check line voltage wiring to motor
24v between C & T1 terminals at motor harness?
No
24v between Pins 4 & 1 (low heat) at P9 5 pin blower molex at PCB?
No
Replace control board
Yes
Yes
Check motor controller
Replace blower motor
First Stage Heat Operation
2 stage thermostat?
No
use stage delay jumper on PCB to select automatic staging. If set to "NONE" unit will not go to 2nd stage operation
Yes
24v between C & W2 at thermostat?
No
Check LED for error code or thermostat & wiring
Yes
24v to C & HI terminals at gas vlave?
No
24v at pins 7 (MVHO) and Pins 5 (Common) at P1 9-pin plug on PCB?
No
Replace PCB
Yes
Yes
Check wiring or replace gas valve
208/240v between "High & L2" inducer terminals on PCB?
No
Check wiring or replace PCB
Yes
24v between pins 4 & 2 (high heat) at P9 5-pin blower molex at PCB?
No
Check wiring or replace PCB
Yes
24v between C & T1/2/3/4/5 terminals at blower motor harness?
No
Check low voltage wiring to motor
Yes
2nd stage heat operating

Gas Electric (Single Stage) 1 Flashes (Red)

Error Code:
1 Flashes (Red) - Ignition Lockout

Applicable Models:
DP3GM*****41

Method of Error Detection:
3 Failed Ignition Trials

Error Decision Conditions:
An external lockout occurs if the integrated ignition control determines that a measurable combustion
cannot be established within three (3) consecutive ignition attempts. If flame is not established within the seven (7) second trial for ignition, the gas valve is deenergized, 15 second inter-purge cycle is completed, and ignition is reattempted. The control will repeat this routine three times if a measurable combustion is not established. The control will then shut off the induced draft blower and go into a lockout state.

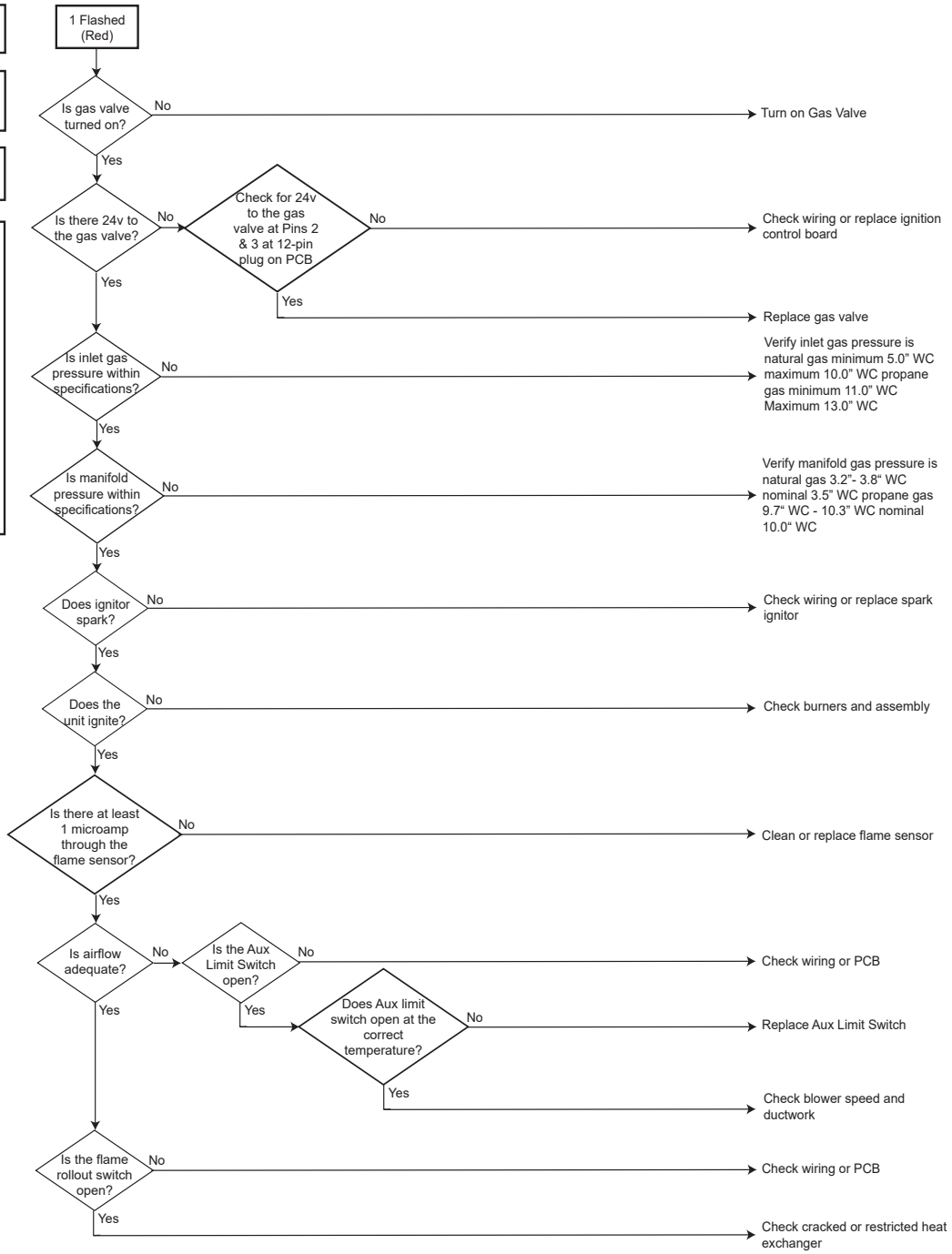

Gas Electric (Single Stage) 2 Flashes (Red)

Error Code:
2 Flashes (Red) - Pressure switch stuck open with inducer running

Applicable Models:
DP3GM*****41

Method of Error Detection:
Pressure switch is open with inducer motor running

Error Decision Conditions:
If the control senses an open pressure switch during the pre-purge cycle, the induced draft blower only will be energized. If the pressure switch opens after ignition has begun the gas valve is deenergized, the circulator blower heat off cycle begins, and the induced draft blower remains on. The diagnostic fault code is two flashes.

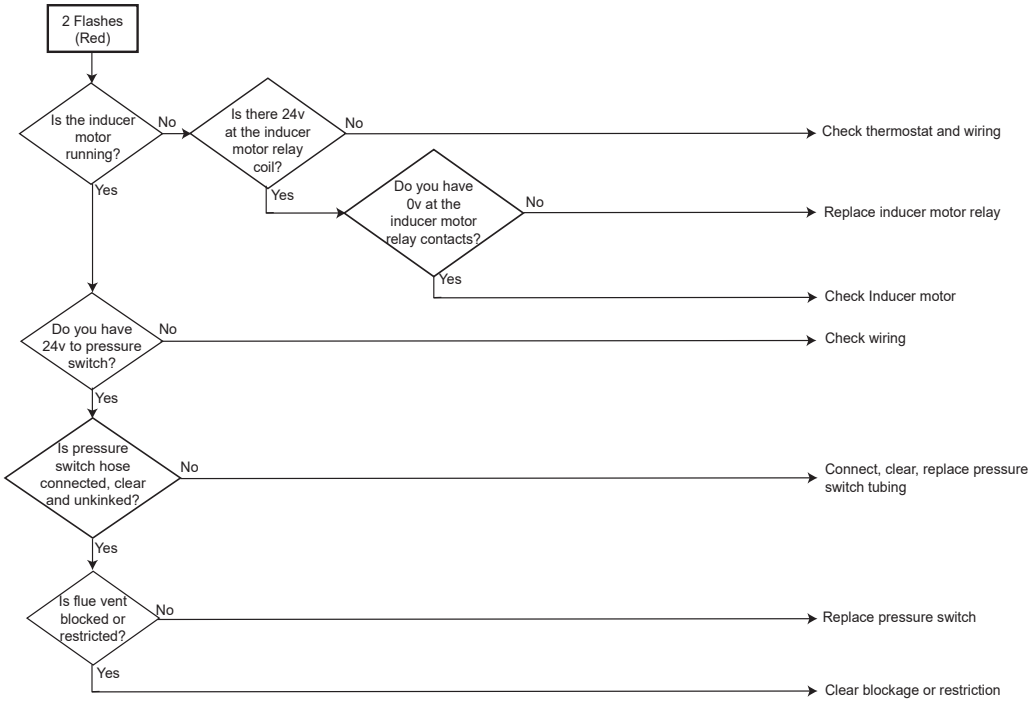

Error Code:
3 Flashes (Red) - Pressure Switch Stuck Closed

Applicable Models:
DP3GM*****41

Method of Error Detection:
Pressure switch is closed with inducer motor off

Error Decision Conditions:
If the control sense the pressure switch is closed before the inducer is energized, the inducer will remain off and the control will flash an error code of 3 flash on the LED until the pressure switch opens.

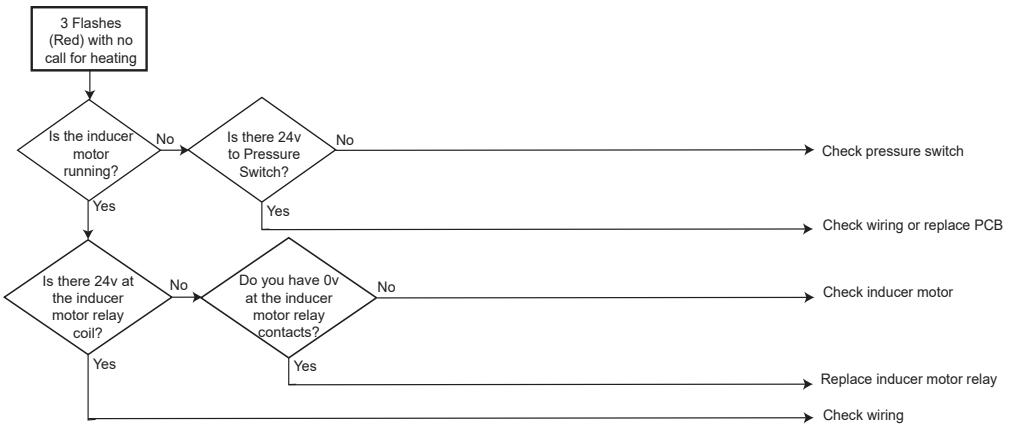

Error Code:
4 Flashes (Red) - Open main limit switch

Applicable Models:
DP3GM*****41

Method of Error Detection:
Open thermal protection device (Primary Limit, Auxiliary Limit, Flame Roll Out)

Error Decision Conditions:
If the control senses that a limit switch has opened, the gas valve is immediately deenergized, the induced draft and air circulating blowers are energized. The induced draft and air circulator blowers remain energized until the limit switch recloses.
The diagnostic fault code for an open limit is four (4) flashes.

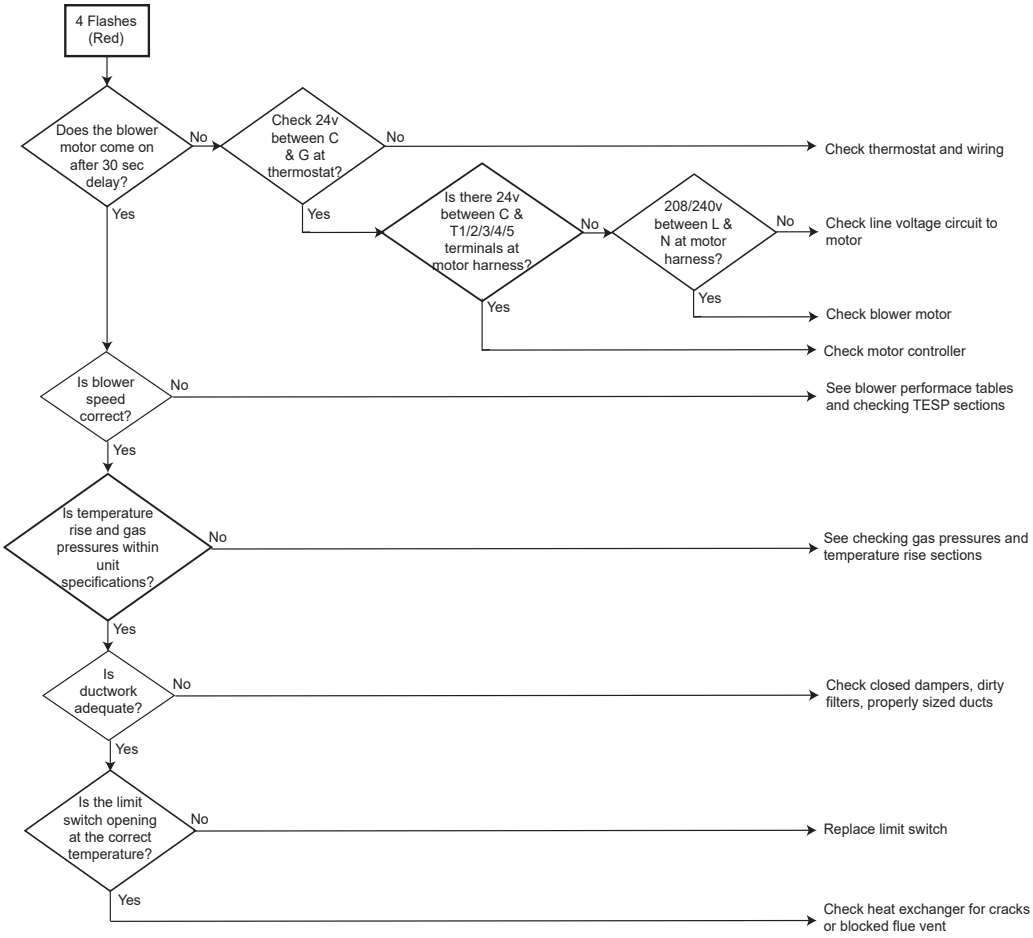

Error Code:
5 Flashes (Red) - Flame detected with gas valve closed

Applicable Models:
DP3GM*****41

Method of Error Detection:
Flame detected with gas valve de-energized

Error Decision Conditions:
The control senses a flame present when the gas valve is off. If flame is detected with the gas valve de-energized, the combustion and air circulator blowers are energized. The diagnostic fault code is five (5) flashes for this condition.

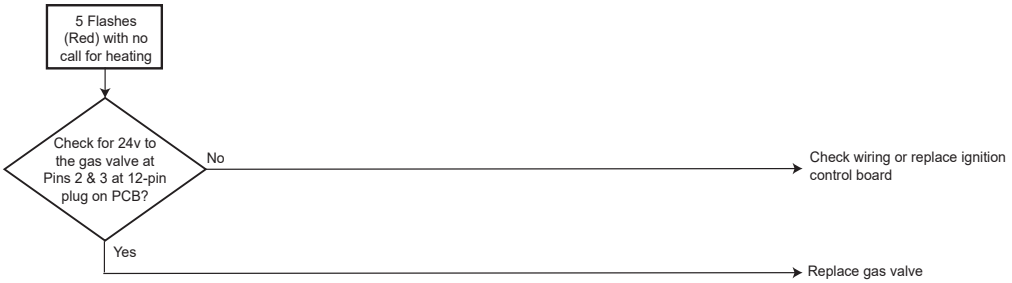

Error Code:
1 Flashes (Amber) - Low flame sense

Applicable Models:
DP3GM*****41

Method of Error Detection:
Flame signal drops below a predetermined value

Error Decision Conditions:
Control senses less than 1 microamp current during call for heating

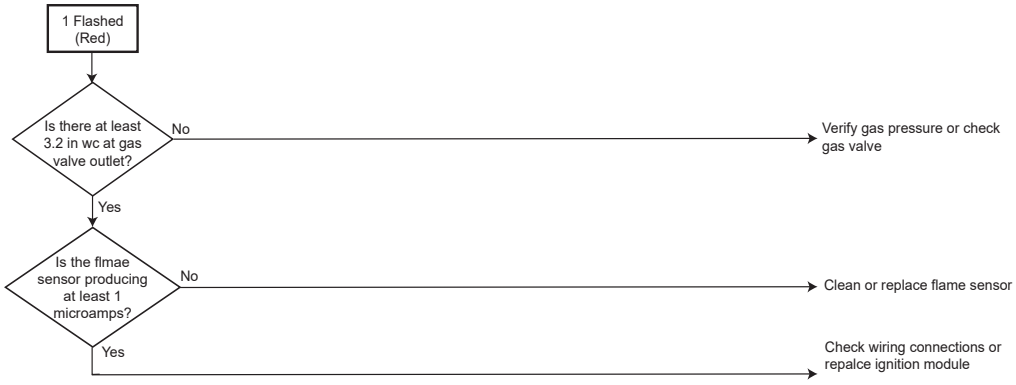

Error Code:
1 Flashes (Red) - Ignition Lockout

Applicable Models:
DP5GM*****41

Method of Error Detection:
3 Failed Ignition Trials

Error Decision Conditions:
An external lockout occurs if the integrated ignition control determines that a measurable combustion
cannot be established within three (3) consecutive ignition attempts. If flame is not established within the seven (7) second trial for ignition, the gas valve is deenergized, 15 second inter-purge cycle is completed, and ignition is reattempted. The control will repeat this routine three times if a measurable combustion is not established. The control will then shut off the induced draft blower and go into a lockout state.

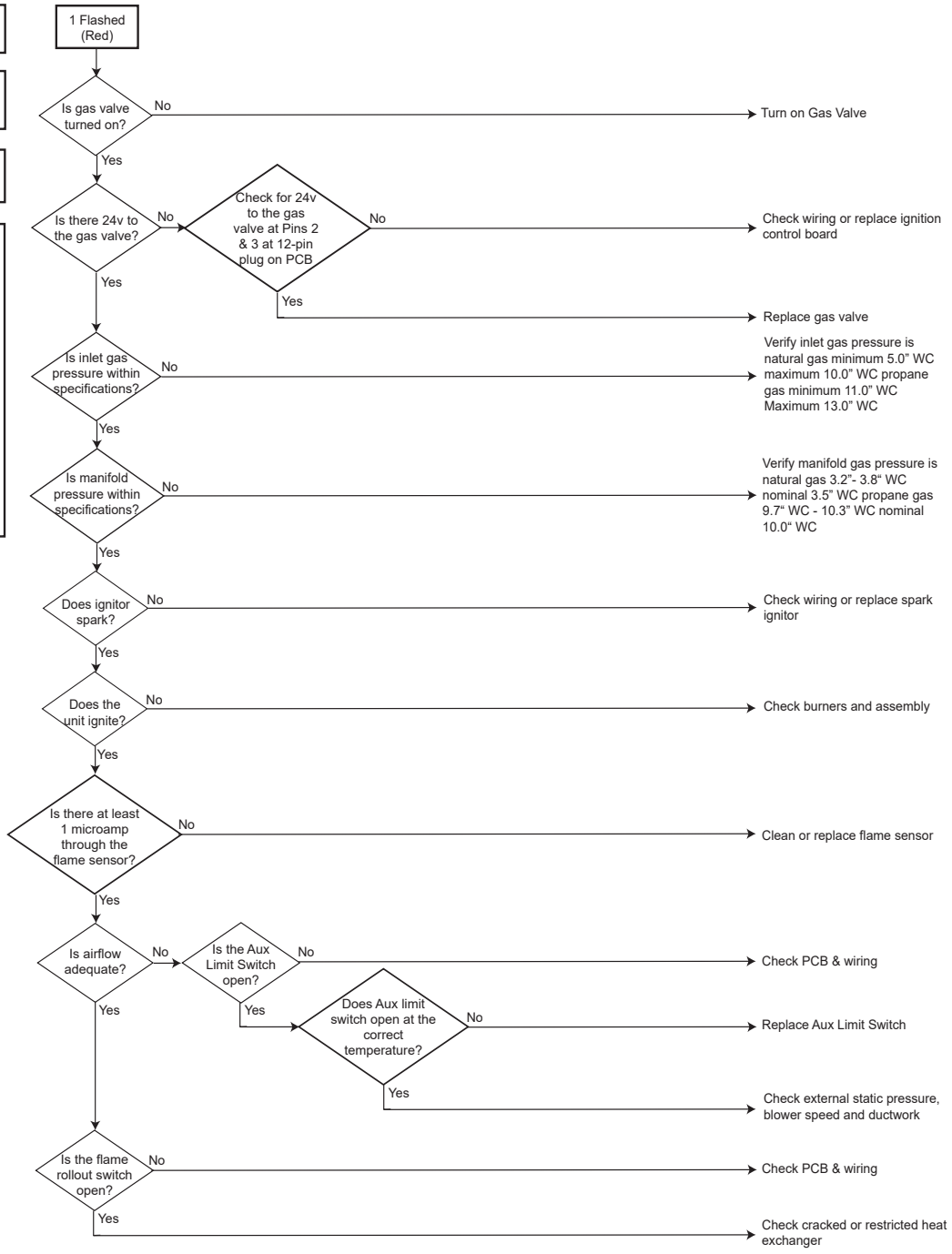

Error Code:
2 Flashes (Red) - Pressure switch stuck open with inducer running

Applicable Models:
DP5GM*****41

Method of Error Detection:
Pressure switch is open with inducer motor running

Error Decision Conditions:
If the control senses an open pressure switch during the pre-purge cycle, the induced draft blower only will be energized. If the pressure switch opens after ignition has begun the gas valve is deenergized, the circulator blower heat off cycle begins, and the induced draft blower remains on. The diagnostic fault code is two flashes.

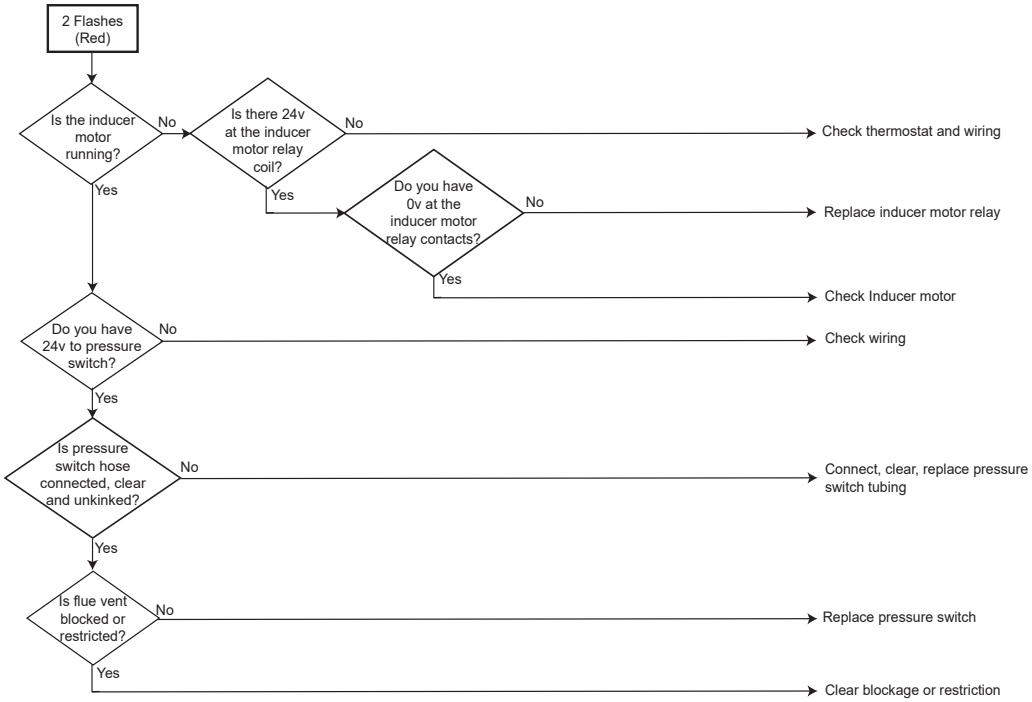

Error Code:
3 Flashes (Red) - Pressure Switch Stuck Closed

Applicable Models:
DP5GM*****41

Method of Error Detection:
Pressure switch is closed with inducer motor off

Error Decision Conditions:
If the control sense the pressure switch is closed before the inducer is energized, the inducer will remain off and the control will flash an error code of 3 flash on the LED until the pressure switch opens.

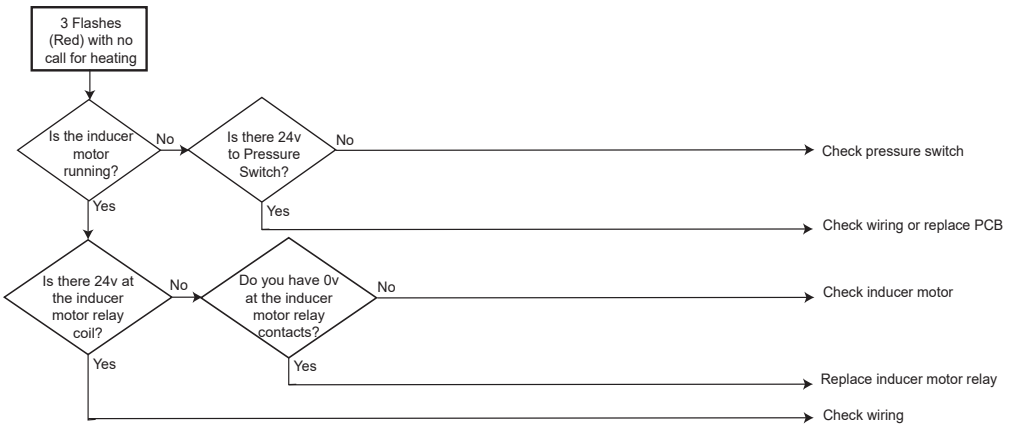

Error Code:
4 Flashes (Red) - Open high temperature limit switch (Primary limit, Aux Limit, Flame rollout)

Applicable Models:
DP3GM*****41

Method of Error Detection:
Open thermal protection device

Error Decision Conditions:
If the control senses that a limit switch has opened, the gas valve is immediately deenergized, the induced draft and air circulating blowers are energized. The induced draft and air circulator blowers remain energized until the limit switch recloses.
The diagnostic fault code for an open limit is four (4) flashes.

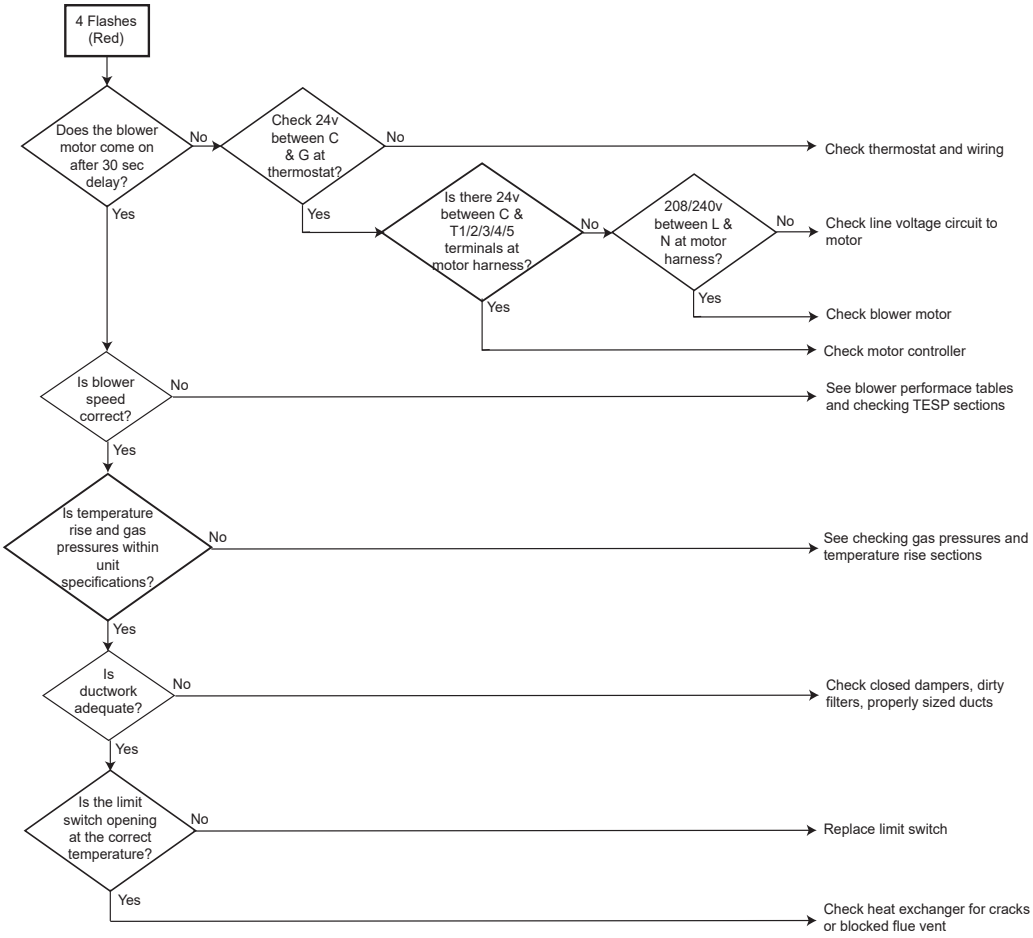

Gas Electric (Two Stage) 5 Flashes (Red)

Error Code:
5 Flashes (Red) - Flame detected with no call for heat

Applicable Models:
DP5GM*****41

Method of Error Detection:
Flame detected with gas valve de-energized

Error Decision Conditions:
If flame is detected with the gas valve de-energized, the combustion and air circulator blowers are energized. The diagnostic fault code is five (5) flashes for this condition.

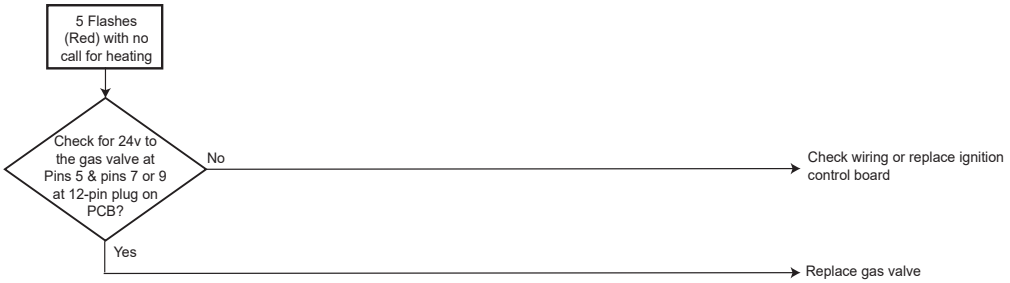

Error Code:
7 Flashes (Red) - Limit switch has tripped too many times (Primary Limit, Aux limit, Flame rollout)

Applicable Models:
DP5GM*****41

Method of Error Detection:
A limit switch has tripped 5 times in same heating cycle

Error Decision Conditions:
If the control senses that a limit switch has opened 5 times within the same call for heat, the gas valve is immediately deenergized, the induced draft and air circulating blowers are energized. The induced draft and air circulator blowers remain energized until the limit switch recloses. The diagnostic fault code for Limit Switch Opened 5 times in the same call for heat is four (7) flashes.

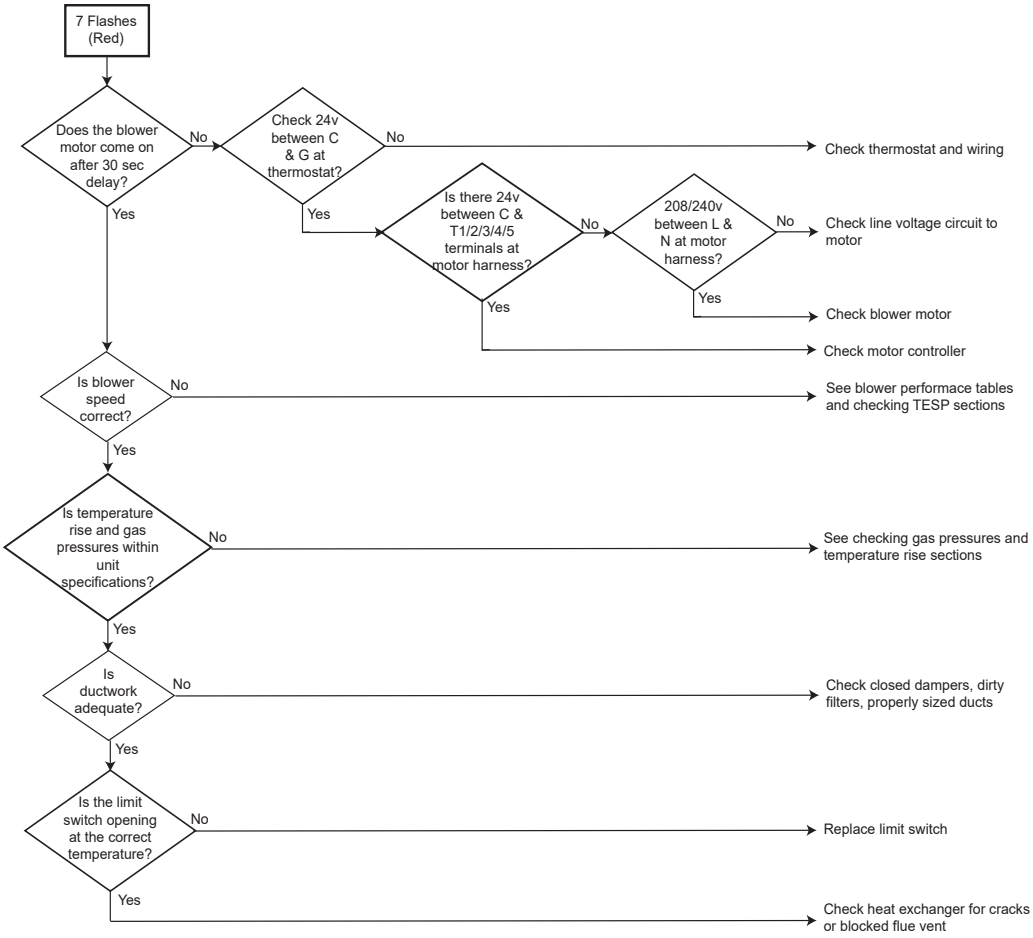

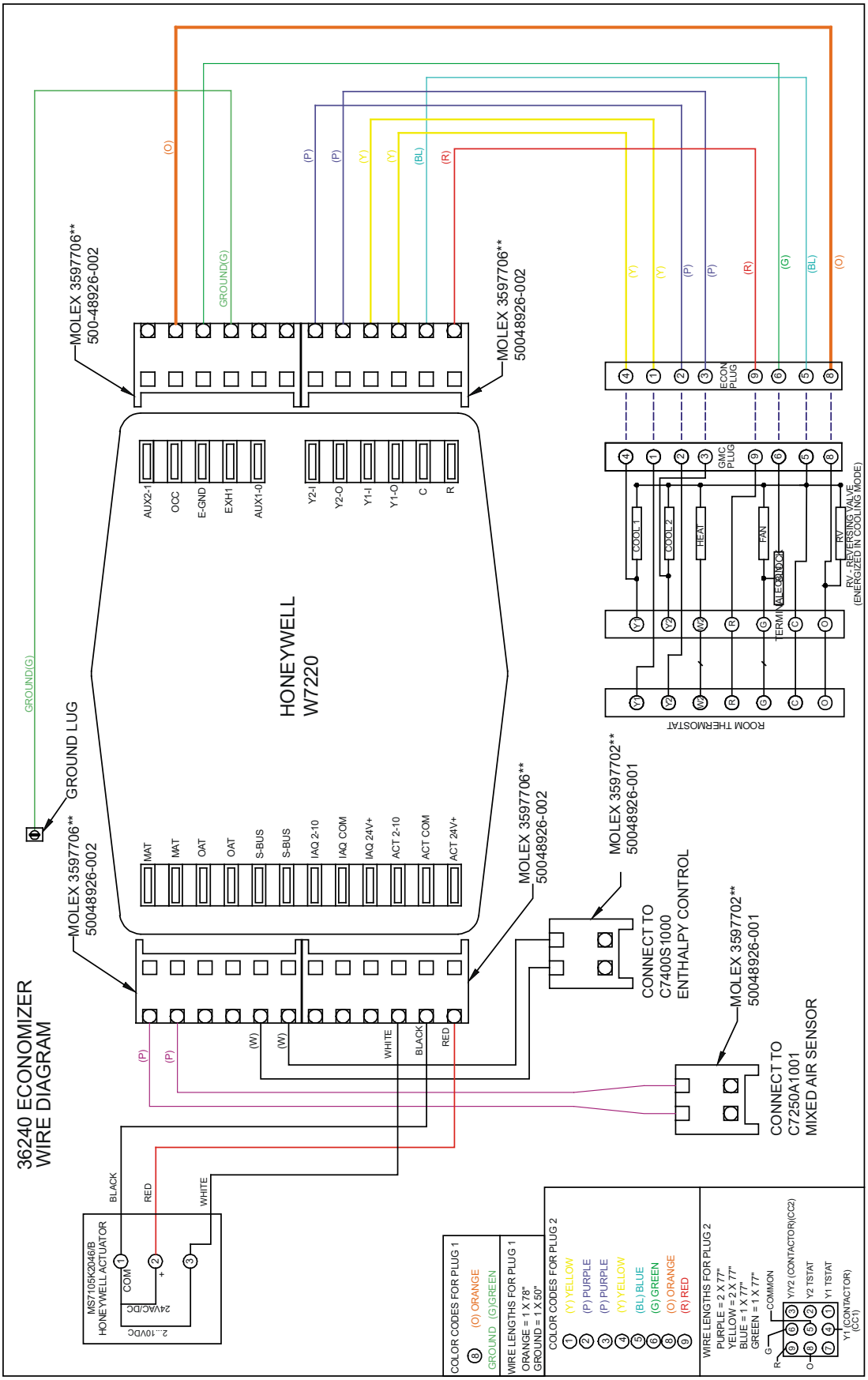

Wiring is subject to change. Always refer to the wiring diagram on the unit for the most up-to-date wiring.

WARNING

HIGH VOLTAGE!
DISCONNECT ALL POWER BEFORE SERVICING OR INSTALLING THIS UNIT. MULTIPLE POWER SOURCES MAY BE PRESENT. FAILURE TO DO SO MAY CAUSE PROPERTY DAMAGE, PERSONAL INJURY OR DEATH.

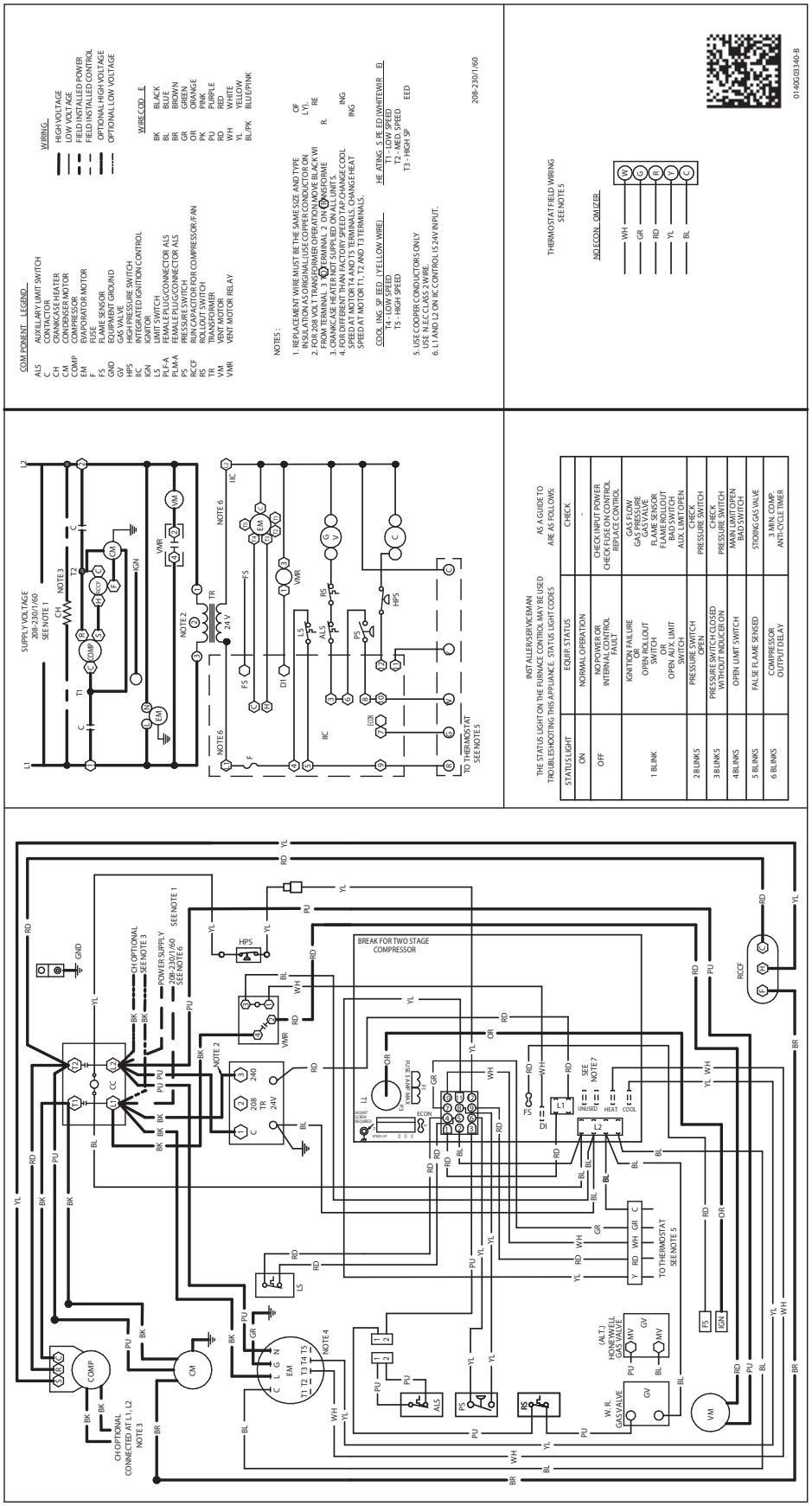

Wiring is subject to change. Always refer to the wiring diagram on the unit for the most up-to-date wiring.

WARNING

HIGH VOLTAGE!
DISCONNECT ALL POWER BEFORE SERVICING OR INSTALLING THIS UNIT. MULTIPLE POWER SOURCES MAY BE PRESENT. FAILURE TO DO SO MAY CAUSE PROPERTY DAMAGE, PERSONAL INJURY OR DEATH.

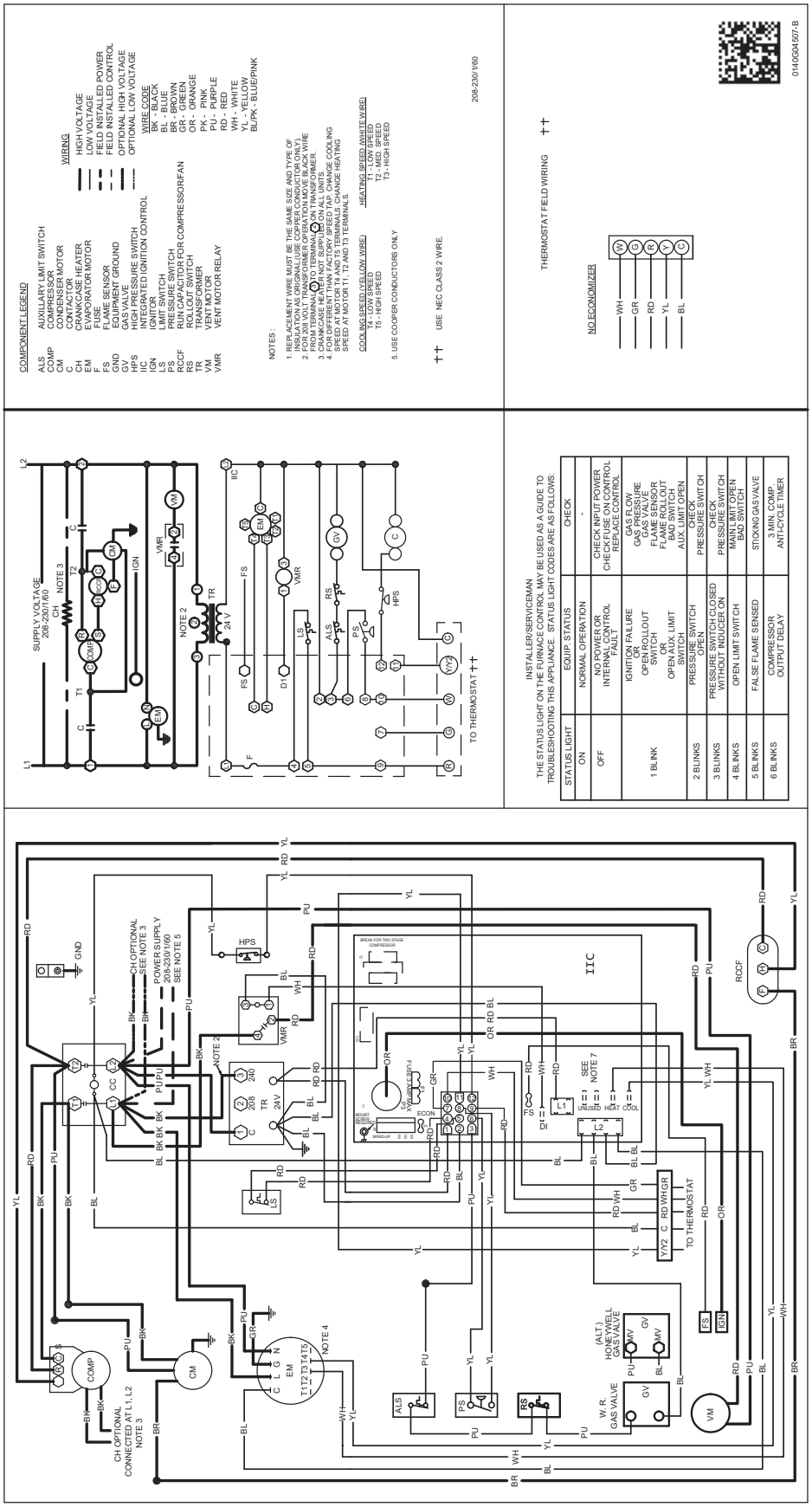

Wiring is subject to change. Always refer to the wiring diagram on the unit for the most up-to-date wiring.

WARNING

HIGH VOLTAGE!
DISCONNECT ALL POWER BEFORE SERVICING OR INSTALLING THIS UNIT. MULTIPLE POWER SOURCES MAY BE PRESENT. FAILURE TO DO SO MAY CAUSE PROPERTY DAMAGE, PERSONAL INJURY OR DEATH.

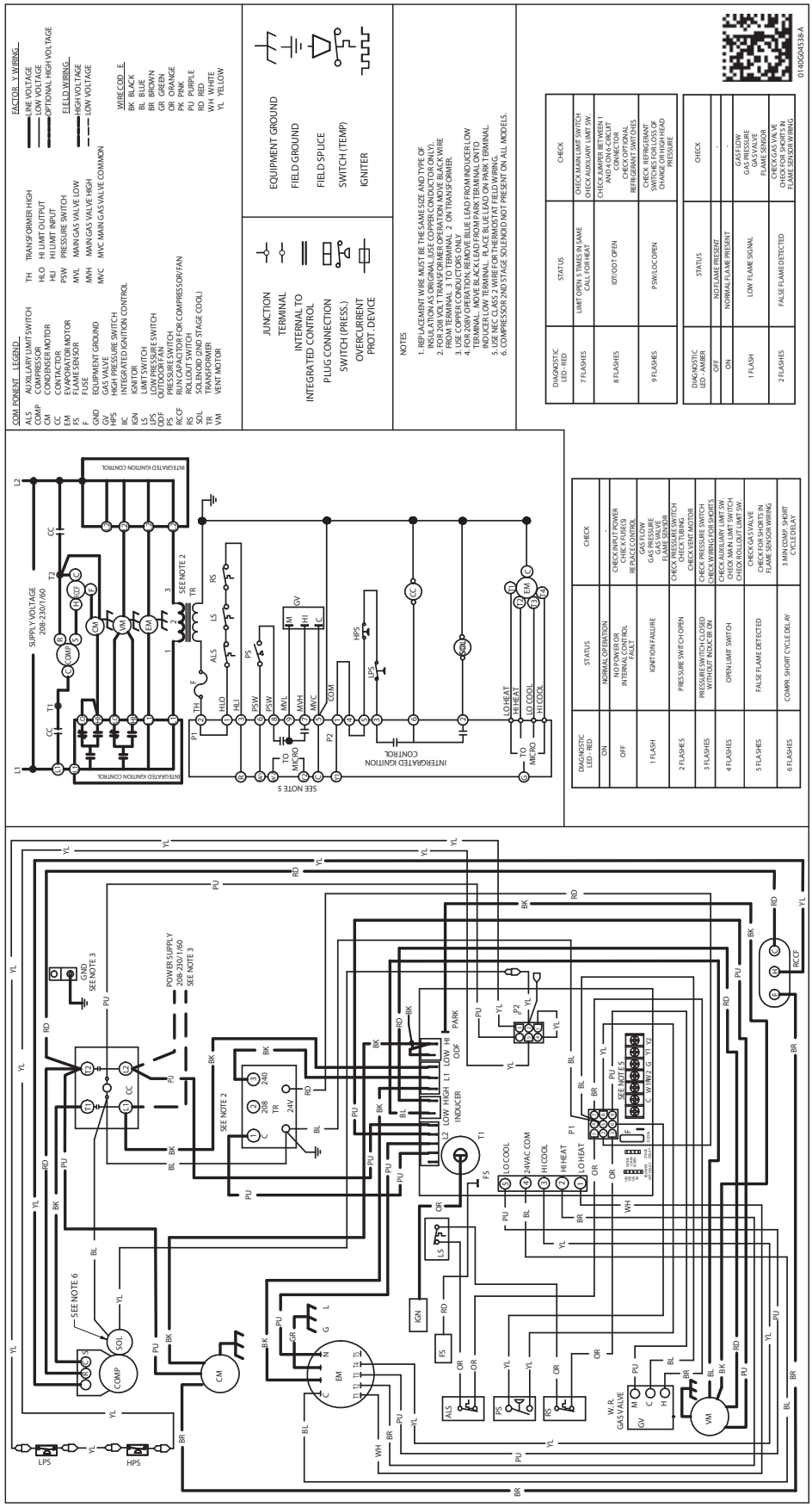

Wiring is subject to change. Always refer to the wiring diagram on the unit for the most up-to-date wiring.

WARNING

HIGH VOLTAGE!
DISCONNECT ALL POWER BEFORE SERVICING OR INSTALLING THIS UNIT. MULTIPLE POWER SOURCES MAY BE PRESENT. FAILURE TO DO SO MAY CAUSE PROPERTY DAMAGE, PERSONAL INJURY OR DEATH.

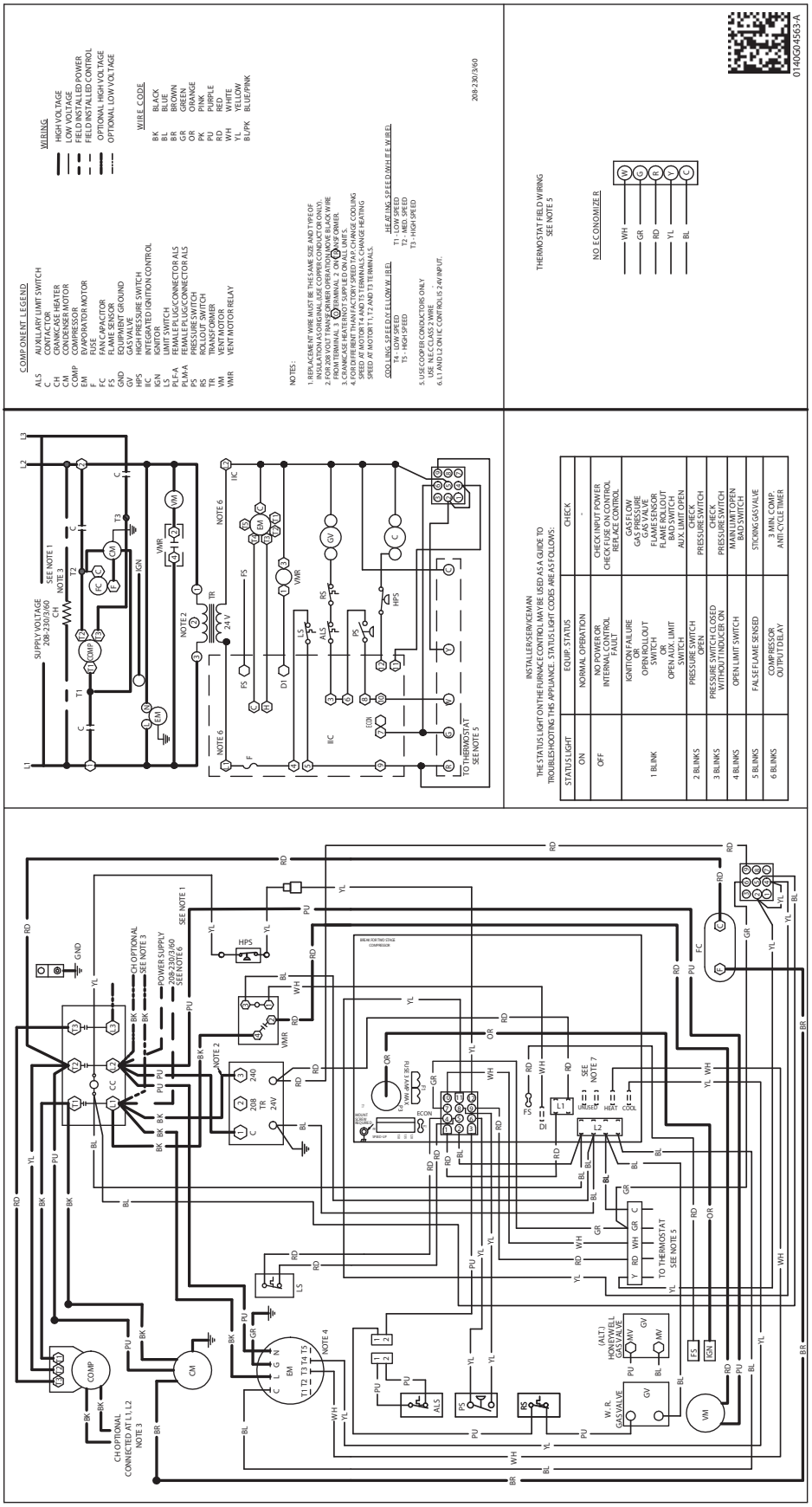

Wiring is subject to change. Always refer to the wiring diagram on the unit for the most up-to-date wiring.

WARNING

HIGH VOLTAGE!
DISCONNECT ALL POWER BEFORE SERVICING OR INSTALLING THIS UNIT. MULTIPLE POWER SOURCES MAY BE PRESENT. FAILURE TO DO SO MAY CAUSE PROPERTY DAMAGE, PERSONAL INJURY OR DEATH.

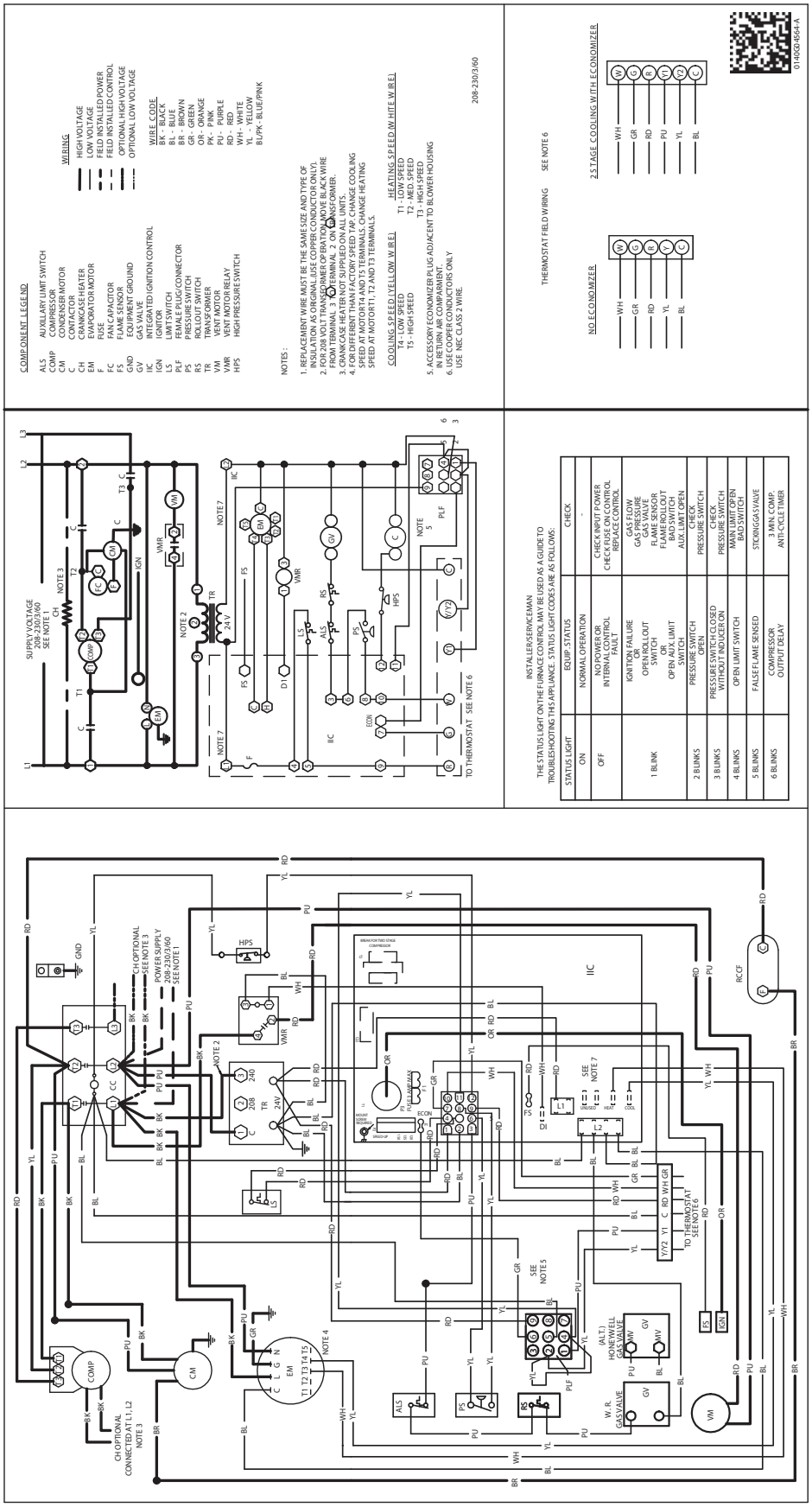

Wiring is subject to change. Always refer to the wiring diagram on the unit for the most up-to-date wiring.

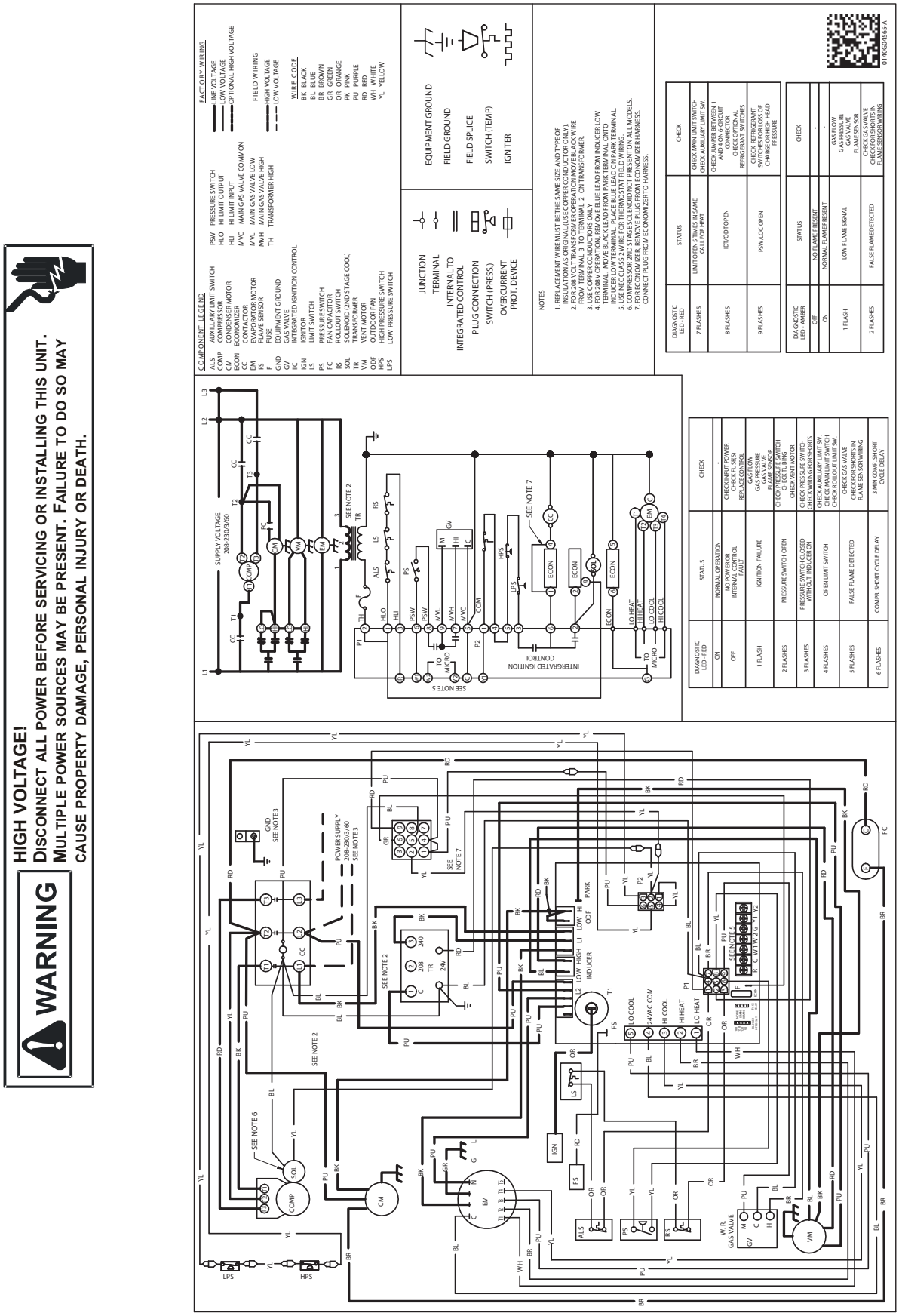

Wiring is subject to change. Always refer to the wiring diagram on the unit for the most up-to-date wiring.

WARNING

HIGH VOLTAGE!
DISCONNECT ALL POWER BEFORE SERVICING OR INSTALLING THIS UNIT. MULTIPLE POWER SOURCES MAY BE PRESENT. FAILURE TO DO SO MAY CAUSE PROPERTY DAMAGE, PERSONAL INJURY OR DEATH.

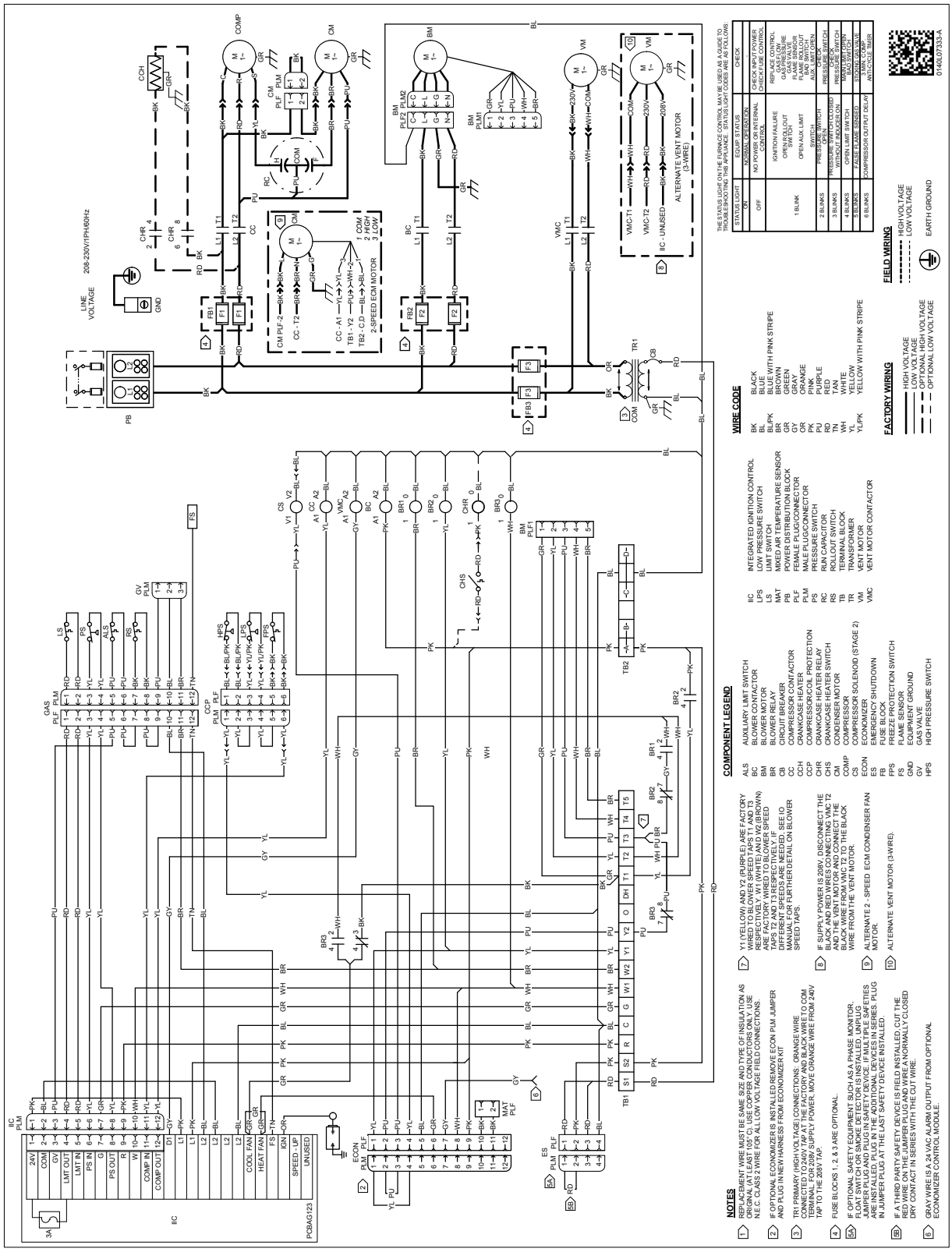

Wiring is subject to change. Always refer to the wiring diagram on the unit for the most up-to-date wiring.

SCHEDULED MAINTENANCE

Package gas units require regularly scheduled maintenance to preserve high performance standards, prolong the service life of the equipment, and lessen the chances of costly failure.

In many instances the owner may be able to perform some of the maintenance; however, the advantage of a service contract, which places all maintenance in the hands of a trained serviceman, should be pointed out to the owner.

WARNING

HIGH VOLTAGE
Disconnect all power before servicing or installing this unit. Multiple power sources may be present. Failure to do so may cause property damage, personal injury or death.

ONCE A MONTH

1. Inspect the return filters of the evaporator unit and clean or change if necessary. **NOTE:** Depending on operation conditions, it may be necessary to clean or replace the filters more often. If permanent type filters are used, they should be washed with warm water and dried.
2. When operating on the cooling cycle, inspect the condensate line piping from the evaporator coil. Make sure the piping is clear for proper condensate flow.

ONCE A YEAR

Qualified Service Personnel Only

1. Clean the indoor and outdoor coils.
2. Clean the cabinet inside and out.
3. Motors are permanently lubricated and do not require oiling. TO AVOID PREMATURE MOTOR FAILURE, DO NOT OIL.
4. Manually rotate the outdoor fan and indoor blower to be sure they run freely.
5. Inspect the control panel wiring, compressor connections, and all other component wiring to be sure all connections are tight. Inspect wire insulation to be certain that it is good.
6. Check the contacts of the compressor contactor. If they are burned or pitted, replace the contactor.
7. Using a halide or electronic leak detector, check all piping and etc. for refrigerant leaks.
8. Check the combustion chamber (Heat Exchanger) for soot, scale, etc. Inspect all burners for lint and proper positioning.
9. Start the system, using the proper instrumentation check gas inlet and manifold pressures, burner flame and microamp signal. Adjust if necessary.
10. Start the system and run a Heating Performance Test. If the results of the test are not satisfactory, see the “Service Problem Analysis” Guide for the possible cause.

TEST EQUIPMENT

Proper test equipment for accurate diagnosis is as essential as regular hand tools.

The following is a must for every service technician and service shop:

1. Thermocouple type temperature meter - measure dry bulb temperature.
2. Sling psychrometer - measure relative humidity and wet bulb temperature.
3. Amprobe - measure current.
4. Volt-Ohm Meter - testing continuity, capacitors, motor windings and voltage.
5. Accurate Leak Detector - testing for refrigerant leaks.
6. High Vacuum Pump - evacuation.
7. Electric Vacuum Gauge, Manifold Gauges and high vacuum hoses - to measure and obtain proper vacuum.
8. Accurate Charging Cylinder or Electronic Scale - measure proper refrigerant charge.
9. Inclined Manometer - measure static pressure and pressure drop across coils.

Other recording type instruments can be essential in solving abnormal problems, however, in many instances they may be rented from local sources.

Proper equipment promotes faster, more efficient service, and accurate repairs with less call backs.

SCHEDULED MAINTENANCE

HEATING PERFORMANCE TEST

Before attempting to diagnose an operating fault, run a Heating Performance Test and apply the results to the Service Problem Analysis Guide.

To conduct a heating performance test, the BTU input to the package gas unit must be calculated.

After the heating cycle has been in operation for at least fifteen minutes and with all other gas appliances turned off, the gas meter should be clocked.

To find the BTU input, multiply the number of cubic feet of gas consumed per hour by the heating value of the gas being used. (The calorific value of the gas being used is found by contacting your local utility.)

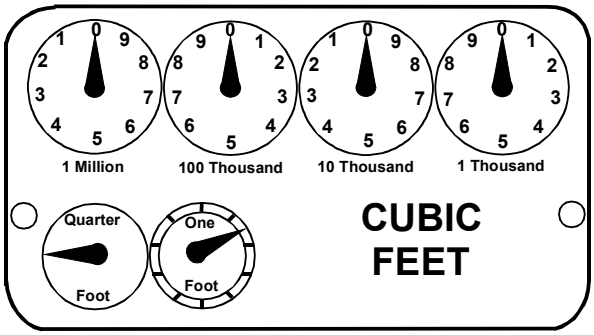

GAS RATE -- CUBIC FEET PER HOUR

Seconds for One Revolution	Size of Test Dial 1/4 cu/ft	1/2 cu/ft	1 cu/ft	2 cu/ft	5 cu/ft	Seconds for One Revolution	Size of Test Dial 1/4 cu/ft	1/2 cu/ft	1 cu/ft	2 cu/ft	5 cu/ft
10	90	180	360	720	1800	36	25	50	100	200	500
11	82	164	327	655	1636	37	--	--	97	195	486
12	75	150	300	600	1500	38	23	47	95	189	474
13	69	138	277	555	1385	39	--	--	92	185	462
14	64	129	257	514	1286	40	22	45	90	180	450
15	60	120	240	480	1200	41	--	--	--	176	439
16	56	113	225	450	1125	42	21	43	86	172	429
17	53	106	212	424	1059	43	--	--	--	167	419
18	50	100	200	400	1000	44	--	41	82	164	409
19	47	95	189	379	947	45	20	40	80	160	400
20	45	90	180	360	900	46	--	--	78	157	391
21	43	86	171	343	857	47	19	38	76	153	383
22	41	82	164	327	818	48	--	--	75	150	375
23	39	78	157	313	783	49	--	--	--	147	367
24	37	75	150	300	750	50	18	36	72	144	360
25	36	72	144	288	720	51	--	--	--	141	355
26	34	69	138	277	692	52	--	--	69	138	346
27	33	67	133	265	667	53	17	34	--	136	340
28	32	64	129	257	643	54	--	--	67	133	333
29	31	62	124	248	621	55	--	--	--	131	327
30	30	60	120	240	600	56	16	32	64	129	321
31	--	--	116	232	581	57	--	--	--	126	316
32	28	56	113	225	563	58	--	31	62	124	310
33	--	--	109	218	545	59	--	--	--	122	305
34	26	53	106	212	529	60	15	30	60	120	300
35	--	--	103	206	514						

SCHEDULED MAINTENANCE

Example:
It takes forty-five (45) seconds on the gas meter for the hand on the cubic foot dial to make one complete revolution, with all appliances off, except the unit. Using the gas rate chart, observe the forty-five (45) seconds, locate and read across to the one (1) cubic foot dial column. There you will find the number 80, which shows that eighty (80) cubic feet of gas will be consumed in one (1) hour.

Let's assume the local gas utility has stated that the calorific value of the gas is 1025 BTU per cubic foot.

Multiplying the eighty (80) cubic feet by 1025 BTU/ft3 gives us an input of 82,000 BTU/HR.

Checking the BTU input on the rating plate of the unit being tested.

EXAMPLE: DP14GM3608041**
INPUT: 80,000 BTU/HR
OUTPUT CAP: 63,400 BTU/HR

Should the figure you calculated not fall within five (5) percent of the nameplate rating of the unit, adjust the gas valve pressure regulator or resize orifices. **In no case should the input exceed that shown on the rating plate**.

CAUTION

ALWAYS CONNECT A MANOMETER TO THE 1/8" PIPE TAP AT THE GAS VALVE BEFORE ADJUSTING THE PRESSURE REGULATOR. IN NO CASE SHOULD THE FINAL MANIFOLD PRESSURE VARY MORE THAN PLUS OR MINUS .3 INCHES WATER COLUMN FROM 3.5 INCHES WATER COLUMN FOR NATURAL GAS OR 10 INCHES WATER COLUMN FOR PROPANE GAS.

To adjust the pressure regulator on the gas valve, turn down (clockwise) to increase pressure and input, and out (counterclockwise) to decrease pressure and input.

Since propane gas is not normally installed with a gas meter, clocking will be virtually impossible. The gas orifices used with propane are calculated for 2500 BTU gas per cubic foot and with proper inlet pressures and correct piping size, full capacity will be obtained.

With propane gas, no unit gas valve regulator is used; however, the second stage supply line pressure regulator should be adjusted to give 11" water column with all other gas consuming appliances running.

The dissipation of the heat transferred to the heat exchanger is now controlled by the amount of air circulated over its surface.

The flow rate (CFM) of air circulated is governed by the external static pressure in inches of water column of duct work, cooling coil, registers and etc., applied externally to the unit versus the motor speed tap.

A properly operating unit must have the BTU input and flow rate (CFM) of air, within the limits shown to prevent short cycling of the equipment. As the external static pressure goes up, the temperature rise will also increase. Consult the proper tables for temperature rise limitation.