Service and Troubleshooting

Goodman® Brand GM9C80/GC9C80 & Amana® Brand AM9C80/AC9C80 Two Stage Furnace with nine speed ECM Motor

Pride and workmanship go into every product to provide our customers with quality products. It is possible, however, that during its lifetime a product may require service. Products should be serviced only by a qualified service technician who is familiar with the safety procedures required in the repair and who is equipped with the proper tools, parts, testing instruments and the appropriate service manual. **REVIEW ALL SERVICE INFORMATION IN THE APPROPRIATE SERVICE MANUAL BEFORE BEGINNING REPAIRS.**

WARNING

ONLY PERSONNEL THAT HAVE BEEN TRAINED TO INSTALL, ADJUST, SERVICE, MAINTENANCE OR REPAIR (HEREINAFTER, "SERVICE") THE EQUIPMENT SPECIFIED IN THIS MANUAL SHOULD SERVICE THE EQUIPMENT.

THIS EQUIPMENT IS NOT INTENDED FOR USE BY PERSONS (INCLUDING CHILDREN) WITH REDUCED PHYSICAL, SENSORY OR MENTAL CAPABILITIES, OR LACK OF EXPERIENCE AND KNOWLEDGE, UNLESS THEY HAVE BEEN GIVEN SUPERVISION OR INSTRUCTION CONCERNING USE OF THE APPLIANCE BY A PERSON RESPONSIBLE FOR THEIR SAFETY.

CHILDREN SHOULD BE SUPERVISED TO ENSURE THAT THEY DO NOT PLAY WITH THE EQUIPMENT.

THE MANUFACTURER WILL NOT BE RESPONSIBLE FOR ANY INJURY OR PROPERTY DAMAGE ARISING FROM IMPROPER SUPERVISION, SERVICE OR SERVICE PROCEDURES. IF YOU SERVICE THIS UNIT, YOU ASSUME RESPONSIBILITY FOR ANY INJURY OR PROPERTY DAMAGE WHICH MAY RESULT. IN ADDITION, IN JURISDICTIONS THAT REQUIRE ONE OR MORE LICENSES TO SERVICE THE EQUIPMENT SPECIFIED IN THIS MANUAL, ONLY LICENSED PERSONNEL SHOULD SERVICE THE EQUIPMENT. IMPROPER SUPERVISION, INSTALLATION, ADJUSTMENT, SERVICING, MAINTENANCE OR REPAIR OF THE EQUIPMENT SPECIFIED IN THIS MANUAL, OR ATTEMPTING TO INSTALL, ADJUST, SERVICE OR REPAIR THE EQUIPMENT SPECIFIED IN THIS MANUAL WITHOUT PROPER SUPERVISION OR TRAINING MAY RESULT IN PRODUCT DAMAGE, PROPERTY DAMAGE, PERSONAL INJURY OR DEATH.

TABLE OF CONTENTS

IMPORTANT INFORMATION 2
PRODUCT IDENTIFICATION 4
SYSTEM OPERATION 5
SCHEDULED MAINTENANCE 13
SERVICING 16
- CHECKING VOLTAGE 17
- CHECKING WIRING 17
- CHECKNG THERMOSTAT, WIRING 17
- CHECKING TRANSFORMER AND CONTROL CIRCUIT 17
- CHECKING AIR CIRCULATOR BLOWER MOTOR 18
- CHECKING DUCT STATIC 18
- CHECKING TEMPERATURE RISE 19
- CHECKING PRIMARY LIMIT CONTROL 19
- CHECKING AUXILIARY LIMIT CONTROL 20
- CHECKING FLAME ROLLOUT CONTROL 21
- INDUCED DRAFT BLOWER MOTOR 21
- CECKING GAS VALVE (REDUNDANT) 22
- CHECKING MAIN BURNERS 22
- CHECKING ORIFICES 22
- CHECKING GAS PRESSURE 23
- CHECKING HOT SURFACE IGNITOR 25
- CHECKING FOR FLASHBACK 25
- CHECKING PRESSURE SWITCH 25
- CHECKING FOR DELAYED IGNITION 26
- CHECKING INTERGRATED IGNITION CONTROL BOARDS 26
- CHECKING FLAME SENSOR 26

AIRFLOW TABLES 27
TROUBLESHOOTING CHART 32
WIRING DIAGRAMS 38

WARNING

DO NOT BYPASS SAFETY DEVICES

RS6621007r3
September 2026

©2026 Daikin Comfort Technologies Manufacturing, Inc.
AMANA HEATING & AIR CONDITIONING is a registered trademark of Whirlpool Corporation or its related companies and is used under license.
All rights reserved.

IMPORTANT INFORMATION

IMPORTANT NOTICES FOR CONSUMERS AND SERVICERS

RECOGNIZE SAFETY SYMBOLS, WORDS AND LABELS

WARNING

ELECTRICAL SHOCK, FIRE OR EXPLOSION HAZARD

Failure to follow safety warnings exactly could result in dangerous operation, serious injury, death or property damage.

Improper servicing could result in dangerous operation, serious injury, death or property damage.

- **Before servicing, disconnect all electrical power to furnace.**
- **When servicing controls, label all wires prior to disconnecting.**
  Reconnect wires correctly.
- **Verify proper operation after servicing.**

WARNING

FIRE, EXPLOSION OR CARBON MONOXIDE POISONING HAZARD

Failure to replace with proper control could result in fire, explosion or carbon monoxide poisoning.

This appliance uses NEGATIVE PRESSURE REGULATED gas control.

Replace ONLY with the same model number or as specified by the manufacturer.

AVERTISSEMENT

RISQUE D'ÉLECTROCUTION, D'INCENDIE OU D'EXPLOSION

Si les consignes de sécurité ne sont pas suivies à la lettre, cela peut entraîner la mort, de graves blessures, un fonctionnement dangereux ou des dommages matériels.

Un entretien inadéquat peut entraîner la mort, de graves blessures, un fonctionnement dangereux ou des dommages matériels.

- **Avante de faire l'entretien de l'appareil de chauffage, le débrancher de l'alimentation électrique.**
- **Avant l'entretien des commandes, étiqueter tous les fils avant de les déconnecter. Rebrancher correctement les fils.**
- **Vérifier que l'appareil fonctionne correctement après l'entretien.**

AVERTISSEMENT

RISQUE D'INCENDIE, D'EXPLOSION OU D'INTOXICATION AU MONOXYDE DE CARBONE

Le remplacement de ce dispositif par une commande no conforme risque de provoquer un incendie, un explosion ou une intoxication au monoxyde de carbone.

Cet appareil utilise une commande de gaz À RÉGULATION DE PRESSION NÉGATIVE.

La remplacer UNIQUEMENT par un dispositif portant le même numéro de modèle ou conforme aux spécifications du fabricant.

DANGER

CARBON MONOXIDE POISONING HAZARD

Special Warning for Installation of Furnace or Air Handling Units in Enclosed Areas such as Garages, Utility Rooms or Parking Areas

Carbon monoxide producing devices (such as an automobile, space heater, gas water heater, etc.) should not be operated in enclosed areas such as unventilated garages, utility rooms or parking areas because of the danger of carbon monoxide (CO) poisoning resulting from the exhaust emissions. If a furnace or air handler is installed in an enclosed area such as a garage, utility room or parking area and a carbon monoxide producing device is operated therein, there must be adequate, direct outside ventilation.

This ventilation is necessary to avoid the danger of CO poisoning which can occur if a carbon monoxide producing device continues to operate in the enclosed area. Carbon monoxide emissions can be (re)circulated throughout the structure if the furnace or air handler is operating in any mode.

CO can cause serious illness including permanent brain damage or death.

B10259-216

DANGER
PELIGRO

RIESGO DE INTOXICACIÓN POR MONÓXIDO DE CARBONO

Advertencia especial para la instalación de calentadores ó manejadoras de aire en áreas cerradas como estacionamientos ó cuartos de servicio.

Los equipos ó aparatos que producen monóxido de carbono (tal como automóvil, calentador de gas, calentador de agua por medio de gas, etc) no deben ser operados en áreas cerradas debido al riesgo de envenenamiento por monóxido de carbono (CO) que resulta de las emisiones de gases de combustión. Si el equipo ó aparato se opera en dichas áreas, debe existir una adecuada ventilación directa al exterior.

Esta ventilación es necesaria para evitar el peligro de envenenamiento por CO, que puede ocurrir si un dispositivo que produce monóxido de carbono sigue operando en el lugar cerrado.

Las emisiones de monóxido de carbono pueden circular a través del aparato cuando se opera en cualquier modo.

El monóxido de carbono puede causar enfermedades severas como daño cerebral permanente ó muerte.

B10259-216

DANGER

RISQUE D'EMPOISONNEMENT AU MONOXYDE DE CARBONE

Advertencia especial para la instalación de calentadores ó manejadoras de aire en áreas cerradas como estacionamientos ó cuartos de servicio.

Avertissement special au sujet de l'installation d'appareils de hauffage ou de traitement d'air dans des endroits clos, tets les garages, les locaux d'entretien et les stationnements. Evitez de mettre en marche les appareils produisant du monoxyde de carbone (tels que les automobile, les appareils de chauffage autonome,etc.) dans des endroits non ventilés tels que les d'empoisonnement au monoxyde de carbone. Si vous devez faire fonctionner ces appareils dans un endroit clos, assures-vous qu'il y ait une ventilation directe provenant de l'exterier.

Cette ventilation est nécessaire pour éviter le danger d'intoxication au CO pouvant survenir si un appareil produisant du monoxyde de carbone continue de fonctionner au sein de la zone confinée.

Les émissions de monoxyde de carbone peuvent etre recircules dans les endroits clos, si l'appareil de chauffage ou de traitement d'air sont en marche.

Le monoxyde de carbone peut causer des maladies graves telles que des dommages permanents au cerveau et meme la mort.

B10259-216

OUTSIDE THE U.S., **call 1-713-861-2500**.
(Not a technical assistance line for dealers.) Your telephone company will bill you for the call.

IMPORTANT INFORMATION

FOR YOUR SAFETY READ BEFORE OPERATING

WARNING

WARNING: If you do not follow these instructions exactly, a fire or explosion may result causing property damage, personal injury or loss of life.

ADVERTENCIA: En caso de no seguir estas instrucciones cuidadosamente, se podría producir un incendio o explosión que ocasionaría daños a la propiedad, lesiones personales e incluso la muerte.

A. This appliance does not have a pilot. It is equipped with an ignition device which automatically lights the burners. Do not try to light the burners by hand.

B. BEFORE OPERATING smell all around the appliance area for gas. Be sure to smell next to the floor because some gas is heavier than air and will settle on the floor.

WHAT TO DO IF YOU SMELL GAS
-Do not try to light any appliance.
-Do not touch any electric switch;
do not use any telephone in your building.
-Immediately call your gas supplier from a neighbor's phone. Follow the gas suppliers instructions.

If you cannot reach your gas supplier, call the fire department.

C. Use only your hand to move the gas control switch or knob. Never use tools. If the gas control switch or knob will not operate, don't try to repair it, call a qualified service technician. Force or attempted repair may result in a fire or explosion.

D. Do not use this appliance if any part has been under water. Immediately call a qualified service technician to inspect the appliance and to replace any part of the control system and any gas control which has been under water.

OPERATING INSTRUCTIONS

1. STOP! Read the safety information above on this label.
2. Set the thermostat to lowest setting.
3. Turn off all electric power to the appliance.
4. This appliance is equipped with an automatic ignition system which automatically lights the burners. Do not try to light the burners by hand.
5. Remove control access panel.
6. Move the gas control switch or knob to "OFF".
7. Wait five (5) minutes to clear out any gas. Then smell for gas, including near the floor. If you smell gas, STOP! Follow "B" in the safety information above on this label. If you don't smell gas, go to the next step.
8. Move the gas control switch or knob to "ON".
9. Replace control access panel.
10. Turn on all electric power to the appliance.
11. Set the thermostat to the desired setting.
12. If the appliance will not operate, follow the instructions "To Turn Off Gas To Appliance" and call your service technician or gas supplier.

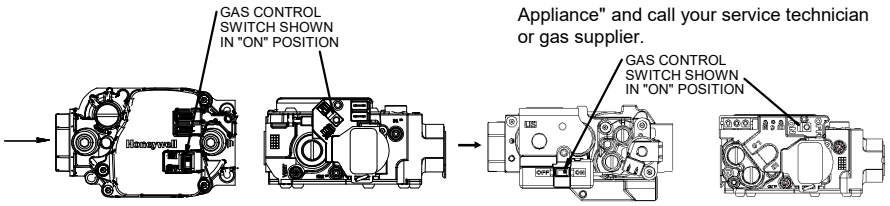

TO TURN OFF GAS TO APPLIANCE

1. Set the thermostat to its lowest setting.
2. Turn off all electric power to the appliance if service is to be performed.
3. Remove control access panel.
4. Move the gas control switch or knob to "OFF". Do not force.
5. Replace control access panel.

WARNING: Improper installation, adjustment, alteration, service or maintenance can cause injury or property damage. Refer to the user's information manual provided with this furnace. For assistance or additional information consult a qualified installer, service agency or the gas supplier.

ADVERTENCIA: La instalación, el ajuste, la alteración, el servicio o el mantenimiento inadecuados pueden causar lesiones o daños a la propiedad. consulte el manual de información del usuario que acompaña a este horno. Para obtener ayuda o información adicional, consulte con un instalador calificado, una agencia de servicio o el proveedor de gas.

This furnace must be installed in accordance with the manufacturers instructions and local codes. In the absence of local codes, follow the National Fuel Gas Code, ANSI Z223.1.

WARNING: If not installed, operated and maintained in accordance with the manufacturer's instructions, this product could expose you to substances during fuel combustion which can cause death or serious illness. This product contains fiberglass insulation.

ADVERTENCIA: Si no se instala, se activa y se mantiene conforme a las instrucciones del fabricante, este producto podría exponerlo a sustancias durante la combustión del carburante, lo que puede causar la muerte o enfermedades severas. Este producto contiene aislante de fibra de vidrio.

FOR YOUR SAFETY:

Do not store or use gasoline or other flammable vapors and liquids in the vicinity of this or any other appliance.

PARA SU SEGURIDAD:

No almacene ni use gasolina u otros vapores y líquidos inflamables cerca de este o cualquier otro aparato.

0140F02503-A

PRODUCT IDENTIFICATION NOMENCLATURE

The model and manufacturing number are used for positive identification of component parts used in manufacturing. Please use these numbers when requesting service or parts information.

G	M	9	C	80	040	4	C	*	**
1	2	3	4	5,6	7,8,9	10	11	12	13,14

BRAND
G- Goodman® Brand

CONFIGURATION
M- Upflow/Horizontal
C- Downflow/Horizontal

MOTOR
9 - Nine Speed ECM

GAS VALVE
C- 2 Stage

AFUE
80- 80% AFUE 92- 92% AFUE
96- 96% AFUE 97- 97% AFUE

MBTU/H
030- 30,000 BTU/h 080- 80,000 BTU/h
040- 40,000 BTU/h 100- 100,000 BTU/h
060- 60,000 BTU/h 120- 120,000 BTU/h

MAXIMUM CFM
3- 1200 CFM 4- 1600 CFM
5- 2000 CFM

CABINET WIDTH
A- 14" C- 21"
B- 17½" D- 24½"

NOx
N = > 40 NG/J NOx
X = < 40 NG/J NOx

ENGINEERING
Major/Minor Revisions
A - Initial Release
B - 1st Revision

SYSTEM OPERATION

WARNING

IF THE INFORMATION IN THESE INSTRUCTIONS IS NOT FOLLOWED EXACTLY, A FIRE OR EXPLOSION MAY RESULT CAUSING PROPERTY DAMAGE, PERSONAL INJURY OR LOSS OF LIFE.

– DO NOT STORE OR USE GASOLINE OR OTHER FLAMMABLE VAPORS AND LIQUIDS IN THE VICINITY OF THIS OR ANY OTHER APPLIANCE.

– **WHAT TO DO IF YOU SMELL GAS**:

- DO NOT TRY TO LIGHT ANY APPLIANCE.
- DO NOT TOUCH ANY ELECTRICAL SWITCH; DO NOT USE ANY PHONE IN YOUR BUILDING.
- IMMEDIATELY CALL YOUR GAS SUPPLIER FROM A NEIGHBOR'S PHONE. FOLLOW THE GAS SUPPLIER'S INSTRUCTIONS.
- IF YOU CANNOT REACH YOUR GAS SUPPLIER, CALL THE FIRE DEPARTMENT.

– INSTALLATION AND SERVICE MUST BE PERFORMED BY A QUALIFIED INSTALLER, SERVICE AGENCY OR THE GAS SUPPLIER.

ELECTRICAL CONNECTIONS

WARNING

TO AVOID THE RISK OF ELECTRICAL SHOCK, WIRING TO THE UNIT MUST BE PROPERLY POLARIZED AND GROUNDED.

WARNING

HIGH VOLTAGE
DISCONNECT ALL POWER BEFORE SERVICING OR INSTALLING THIS UNIT. MULTIPLE POWER SOURCES MAY BE PRESENT. FAILURE TO DO SO MAY CAUSE PROPERTY DAMAGE, PERSONAL INJURY OR DEATH.

CAUTION

LABEL ALL WIRES PRIOR TO DISCONNECTION WHEN SERVICING CONTROLS. WIRING ERRORS CAN COUSE IMPROPER AND DANGEROUS OPERATION. VERIFY PROPER OPERATION AFTER SERVICING.

WIRING HARNESS

The wiring harness is an integral part of this furnace. Field alteration to comply with electrical codes should not be required. Wires are color coded for identification purposes. Refer to the wiring diagram for wire routings. If any of the original wire as supplied with the furnace must be replaced, it must be replaced with wiring material having a temperature rating of at least 105° C. Any replacement wiring must be copper conductor.

115 VOLT LINE CONNECTIONS

Before proceeding with electrical connections, ensure that the supply voltage, frequency, and phase correspond to that specified on the unit rating plate. Power supply to the furnace must be N.E.C. Class 1, and must comply with all applicable codes. The furnace must be electrically grounded in accordance with local codes or, in their absence, with the latest edition of The National Electric Code, ANSI NFPA 70 and/or The Canadian Electric Code CSA C22.1.

An electrical disconnect must be provided at the furnace location.

NOTE: Line polarity must be observed when making field connections.

Connect hot, neutral, and ground wires as shown in the wiring diagram located on the unit's blower door. Metal conduit is not considered a substitute for an actual ground wire to the unit. Line polarity must be observed when making field connections. Line voltage connections can be made through either the right or left side panel.

The furnace is shipped configured for a right side (left side for counterflow) electrical connection with the junction box located inside the burner compartment. To make electrical connections through the opposite side of the furnace, the junction box must be relocated to the other side of the burner compartment prior to making electrical connections.

CAUTION

EDGES OF SHEET METAL HOLES MAY BE SHARP. USE GLOVES AS PRECAUTION WHEN REMOVING HOLE PLUGS.

N**OTE:** Wire routing must not interfere with circulator blower operation, filter removal, or routine maintenance.

WARNING

TO AVOID THE RISK OF ELECTRICAL SHOCK, INJURY, OR DEATH, THE FURNACE MUST BE ELECTRICALLY GROUNDED IN ACCORDANCE WITH LOCAL CODES OR, IN THEIR ABSENCE, WITH THE LATEST EDITION OF THE NATIONAL ELECTRIC CODE.

115 VOLT LINE CONNECTION OF ACCESSORIES (ELECTRONIC AIR CLEANER)

WARNING

HIGH VOLTAGE
DISCONNECT ALL POWER BEFORE SERVICING OR CHANGING ANY ELECTRICAL WIRING. MULTIPLE POWER SOURCES MAY BE PRESENT. FAILURE TO DO SO MAY CAUSE PROPERTY DAMAGE, PERSONAL INJURY OR DEATH.

ACCESSORY LOAD SPECIFICATIONS	
Electronic Air Cleaner	1.0 Amp maximum at 120 VAC
Humidifier	1.0 Amp maximum at 24 VAC

Turn OFF power to the furnace before installing any accessories. Follow the humidifier or air cleaner manufacturers' instructions for locating, mounting, grounding, and controlling these accessories.

If it is necessary for the installer to supply additional line voltage wiring to the inside of the furnace, the wiring must conform to all local codes, and have a minimum temperature rating of 105°C. All line voltage wire splices must be made inside the furnace junction box.

SYSTEM OPERATION

The integrated control module electronic air cleaner terminals (EAC) are energized with 115 volts whenever the circulator blower is energized.

24 VOLT THERMOSTAT WIRING

NOTE: Low voltage connections can be made through either the right or left side panel. Wire routing must not interfere with circulator blower operation, filter removal, or routine maintenance.

A 40 V.A. transformer and an integrated electronic control are built into the furnace to allow use with most cooling equipment. Consult the wiring diagram located in this manual, the installation manual, or on the blower door for further details of 115 Volt and 24 Volt wiring.

Thermostat Wiring Diagrams

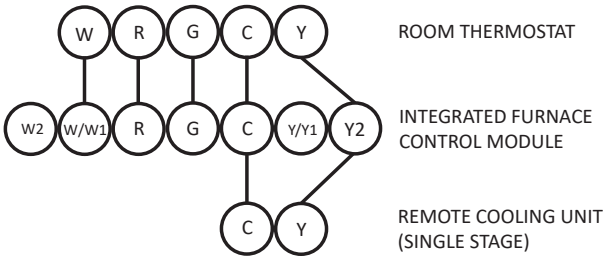

Thermostat - Single -Stage Heating with Single-Stage Cooling

NOTE: To apply a single-stage Heating Thermostat, the staging option *must* be set on single-stage.

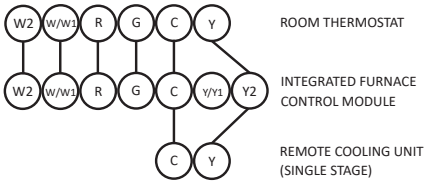

Thermostat - Two-Stage Heating with Single-Stage Cooling

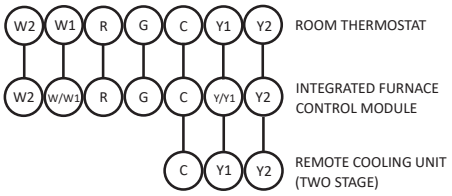

Thermostat - Two-Stage Heating with Two-Stage Cooling

USING A SINGLE-STAGE HEATING THERMOSTAT

A single-stage heating thermostat may be used to control this furnace; however, the furnace is setup by default to use a two-stage heating thermostat. To use a single stage heating thermostat the installer must make the desired selections in the user menus using the push button switches on the control board. When a single stage heating thermostat is used there are two options for controlling the timed transition from low to high fire: 1) Auto 2) Fixed Time.

- Press the Left or Right menu switches to get to the A H S menu.
- The menu will display these options: no 10 20 30 60 AUt
- Fixed time options are expressed in minutes on the display as: 10 20 30 60.
- If AUt (Automatic) is selected, the actual timing for the transition to 2nd stage heat will be calculated by the control board based on length of run time of previous heating cycles (duty cycle).
- Press the center switch to save the selection.

In Auto mode, the transition to 2nd stage heat will vary between 1 to 12 minutes.

Duty Cycle %	Heating Stage Timing	Demand
0-38	1st Stage, 12 minute 2nd Stage	Light
39-50	1st Stage, 10 minute 2nd Stage	Light to Average
51-62	1st Stage, 7 minute 2nd Stage	Average
63-75	1st Stage, 5 minute 2nd Stage	Average to Heavy
76-88	1st Stage, 3 minute 2nd Stage	Heavy
89-100	1st Stage, 1 minute 2nd Stage	Heavy

Using a Two Stage Heating Thermostat

- The furnace is setup by default to use a two-stage heating thermostat.
- The menu may be accessed by pressing the Left or Right menu switches to get to the A H S menu.
- The menu will display these options: no 10 20 30 60 AUt.
- Select no.
- Press the center switch to save the selection.
- In this mode only a W2 signal on the control board will bring on 2nd stage heat.

Fossil Fuel Applications

This furnace can be used in conjunction with a heat pump in a fossil fuel application. A fossil fuel application refers to a combined gas furnace and heat pump installation which uses an outdoor temperature sensor to determine the most cost efficient means of heating (heat pump or gas furnace).

A heat pump thermostat with *three stages of heat* is required to properly use a two-stage furnace in conjunction with a heat pump. Refer to the fossil fuel kit installation instructions for additional thermostat requirements.

Strictly follow the wiring guidelines in the fossil fuel kit installation instructions. All furnace connections must be made to the furnace two-stage integrated control module and the “FURNACE” terminal strip on the fossil fuel control board.

SYSTEM OPERATION

Twinning

Two furnaces of the same model may be twinned. The integrated control board has a 3/16” terminal labeled “TWIN” located beside the low voltage thermostat connection strip. Twinning allows simultaneous operation of two furnaces and forces the indoor blower motors of each furnace to operate synchronously into a common duct system. Using the twinning function will require only field installed wiring with no external kits or parts. The staging and speed tap options must be set the same on both furnaces.

NOTE: Each furnace must be connected to it’s own 115 VAC power supply. The L1 connection to each furnace must be in phase (connected to circuit breakers on the same 115 VAC service panel phase leg). To verify that the furnaces are in phase, check from L1 to L1 on each furnace with a voltmeter. If the furnaces are in phase, the voltage between both furnaces will be ZERO.

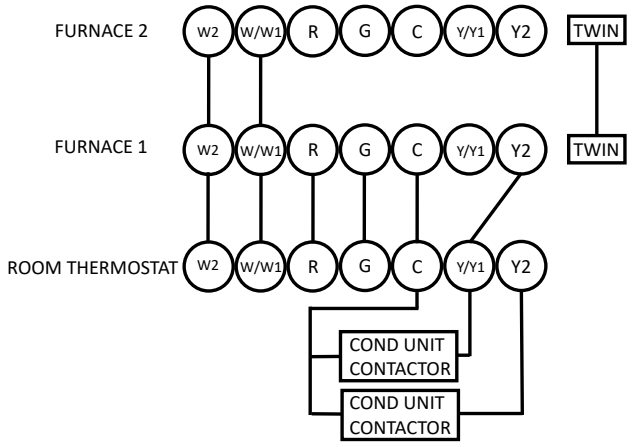

115 Volt Line Connection of Accessories (Humidifier and Electronic Air Cleaner)

The furnace integrated control module is equipped with line voltage accessory terminals for controlling power to an optional field-supplied humidifier and/or electronic air cleaner.

The accessory load specifications are noted in the chart below:

Humidifier	1.0 Amp maximum at 120 VAC
Electronic Air Cleaner	1.0 Amp maximum at 120 VAC

Turn OFF power to the furnace before installing any accessories. Follow the humidifier or air cleaner manufacturers’ instructions for locating, mounting, grounding, and controlling these accessories. Accessory wiring connections are to be made through the 1/4” quick connect terminals provided on the furnace integrated control module. The humidifier and electronic air cleaner hot terminals are identified as HUM H and EAC H. The humidifier and electronic air cleaner neutral terminals are identified as NEUTRAL. All field wiring must conform to applicable codes. Connections should be made as shown.

If it is necessary for the installer to supply additional line voltage wiring to the inside of the furnace, the wiring must conform to all local codes, and have a minimum temperature rating of 105°C. All line voltage wire splices must be made inside the furnace junction box.

The integrated control module humidifier terminal (HUM H) is energized with 115 volts whenever the induced draft blower is energized. The integrated control module electronic air cleaner terminal (EAC H) is energized with 115 volts whenever the circulator blower is energized. This terminal can also be used to provide 115 volt power to a humidifier transformer. The remaining primary transformer wire would be connected to the Line N on the control board.

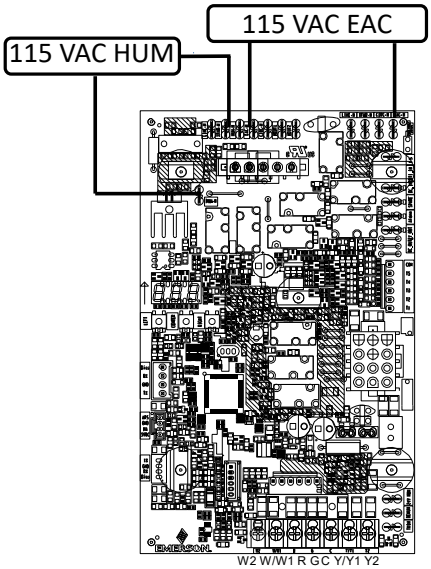

Accessories - Accessories Wiring

Low Voltage Humidifier

The furnace integrated control module is equipped with a low voltage terminal for providing power to an optional field-supplied 24 volt humidifier. The 24V HUM terminal is energized any time the draft inducer is powered. See connection diagram below.

NOTE: This is a 24 volt circuit only, the common connection must be on C terminal of the low voltage terminal strip (where thermostat wires are connected). Wiring for this circuit must NOT be connected to the line N location where line voltage neutral wires are connected.

SYSTEM OPERATION

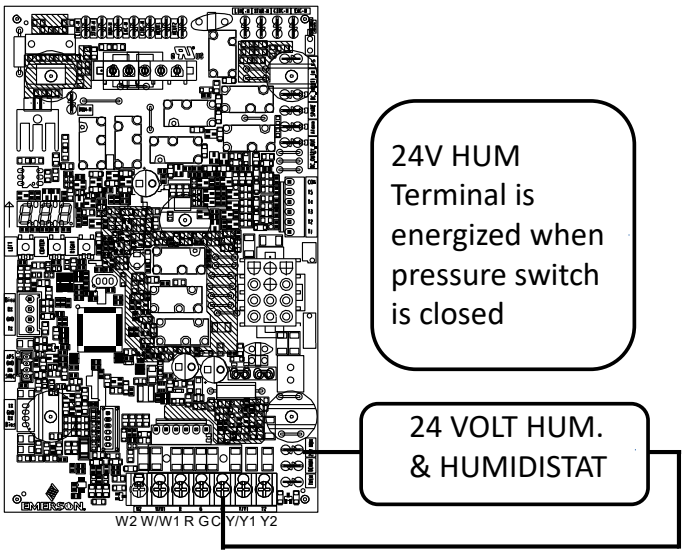

24 Volt Humidifier Connection

Gas Heat Sequence of Operation

Call for 1st Stage Heat

- On a call for heat, the thermostat contacts close & the control board receives 24 VAC on the W1 terminal.
- The control board microcomputer runs its self-check routine.
- The control verifies the limit switch is closed (24 VAC on Pin 8 of the 12 Pin connector).
- The control verifies that pressure switch circuit is open (0 VAC on Pin 5).
- The control module performs a gas valve circuitry check to verify gas valve relay state and presence of voltage at the valve.
- The system will energize the Induced draft blower.
- The pre-purge period begins once the low fire pressure switch is detected closed (24 VAC on Pin 5).
- After the completion of pre-purge, the control will energize the igniter.
- After completion of the ignitor warm-up period:
- The gas valve is energized.
- The ignitor is de-energized as soon as flame is sensed.
- After 30 seconds the indoor blower is energized on heating speed.
- When using a single-stage heating thermostat, the furnace will transition to 2nd stage gas heat by either a fixed time or auto mode depending on menu selections made by the installer.
- The inducer motor is enabled at high speed.
- Closure of the 2nd stage pressure switch will energize the high fire stage of the gas valve.
- The 2nd stage gas heat speed of the indoor blower is energized
- When the thermostat is satisfied:
- The gas valve is de-energized.
- The inducer remains energized for the post purge period (15 seconds).
- The indoor blower runs for the selected off delay period (90 seconds by default, adjustable from 30 – 180 seconds).

Call for 2nd Stage Heat During 1st Stage Heat Operation

- The control board receives a 24 VAC signal on the W2 terminal.
- The inducer motor is enabled at high speed.
- Closure of the 2nd stage pressure switch will energize the high fire stage of the gas valve.
- The 2nd stage gas heat speed of the indoor blower is energized.

Heating Mode Speed Selection

To change the main blower speed in HEATING mode, follow the following steps:

Press the left or right switch until LED displays “gA1” (for single-stage HEATING) or “gA2” (for two-stage HEATING). Press the center switch and LED will display the selected speed number as Fxx (xx: Blower speed number).

The control will rotate available speed number every time left / right switches are pressed. The table below shows the available speeds for low & high heat mode.

Press the center switch to save the selection.

NOTE: Always refer to the Heating Chart to choose from available heating speeds

THERMOSTAT CALL	AVAILABLE SPEEDS
W/W1	F01 (DEFAULT)
	F03
	F04
W2	F02 (DEFAULT)
	F04
	F05

One and Two-Stage Heating Speed Table for 2 Stage IFC

Continuous Fan Mode Speed Selection

To change the main blower speed in circulation mode, follow the following steps:

Press the left or right switch until LED displays “FSd”. Press the center switch and LED will display the selected speed number as Fxx (xx: Blower speed number from 1 to 9). F03 is the default speed for circulation.

SYSTEM OPERATION

The control will rotate available speed number every time left/right switches are pressed. All 9 speeds are available for circulation.

When the center switch is pressed, the current displayed speed will be selected, and control will immediately apply that speed setting.

THERMOSTAT CALL	AVAILABLE SPEEDS
G	F01
	F02
	F03 (DEFAULT)
	F04
	F05
	F06
	F07
	F08
	F09

Circulation Speed Table for 2 Stage IFC

Cooling Mode Sequence of Operation

Low Stage Cooling Mode Sequence:

On a call for low stage cooling, the Y/Y1 or Y/Y1 and G thermostat contacts close signaling the furnace control board with 24 VAC on Y/Y1 or Y/Y1 and G terminals.

- The 7-Segment will display the cool mode: 1 A C
- The compressor and condenser fan are energized.
- The circulator fan is energized at low cool speed after a cool on delay. The electronic air cleaner will also be energized.
- After the thermostat is satisfied, the compressor is de-energized and the Cool Mode Fan Off Delay period begins.
- Following the Cool Mode Fan Off Delay period, the cool circulator and air cleaner relay are de-energized.

2nd Stage Cooling Mode Sequence:

On a call for 2nd stage cooling, the Y2 or Y2 and G thermostat contacts close signaling the furnace control board with 24 VAC on Y2 or Y2 and G terminals.

- The 7-Segment will display the cool mode: 2 A C
- The compressor and condenser fan are energized.
- The circulator fan is energized at cool speed after a cool on delay. The electronic air cleaner will also be energized.
- After the thermostat is satisfied, the compressor is de-energized and the Cool Mode Fan Off Delay period begins.
- Following the Cool Mode Fan Off Delay period, the cool circulator and air cleaner relay are de-energized

Cooling Mode Speed Selection

To change the main blower speed in COOLING mode, follow the following steps:

Press the left or right switch until LED displays “AC1 “(for single stage COOLING) or “AC2 “(for two-stage COOLING). Press the center switch and LED will display the selected speed number as Fxx (xx: Blower speed number from 1 to 9).

The control will rotate available speed number every time left/right switches are pressed. All 9 speeds are available for both Single and Two Stage cooling.

When the center switch is pressed, the current displayed speed will be selected, and control will apply the newly selected speed in next cooling call.

THERMOSTAT CALL	AVAILABLE SPEEDS
Y/Y1	F01
	F02
	F03
	F04 (DEFAULT)
	F05
	F06
	F07
	F08
	F09

Single-Stage Cooling Speed Table for 2 Stage IFC

THERMOSTAT CALL	AVAILABLE SPEEDS
Y2	F01
	F02
	F03
	F04
	F05 (DEFAULT)
	F06
	F07
	F08
	F09

Two-Stage Cooling Speed Table for 2 Stage IFC

CIRCULATING AIR AND FILTERS

DUCTWORK - AIR FLOW

Duct systems and register sizes must be properly designed for the C.F.M. and external static pressure rating of the furnace. Ductwork should be designed in accordance with the recommended methods of “Air Conditioning Contractors of America” manual D.

A duct system should be installed in accordance with Standards of the National Board of Fire Underwriters for the Installation of Air Conditioning, Warm Air Heating and Ventilating Systems, Pamphlets No. 90A and 90B.

A return air filter is not supplied with the furnace. The installer

must supply a means of filtering all of the return air. Filter(s) shall comply with UL900 or CAN/ULC-S111 Standards. If the furnace is installed without filters, and is not covered by the warranty.

Upflow furnaces with air delivery of less than 1800 CFM:

Use one side return or one bottom return ductwork connection.

Upflow furnaces with air delivery of 1800 CFM or higher:

Use two side returns or one side return and one bottom return connection.

Counterflow Furnaces must have a return air duct connection attached to the end of the furnace (top of the furnace when installed vertically) whether the furnace is installed vertically of horizontally. Filters must be installed externally to the furnace cabinet, in the return air plenum or centrally located.

Guide dimples locate the side and bottom return cutout locations. Use a straight edge to scribe lines connecting the dimples. Cut out the opening on these lines. An undersized opening will cause reduced airflow. For bottom return connection, remove the bottom of the cabinet before setting the furnace on the raised platform or return air duct.

A closed return duct system must be used, with the return duct connected to the furnace. ***NOTE:*** *Ductwork must never be attached to the back of the furnace.* Supply and return connections to the furnace may be made with flexible joints to reduce noise transmission, if desired. If a central return is used, a connecting duct must be installed between the unit and the utility room wall so the blower will not interfere with combustion air or draft. The room, closet, or alcove must not be used as a return air chamber.

When the furnace is used in connection with a cooling unit, the furnace should be installed in parallel with or on the upstream side of the cooling unit to avoid condensation in the heating element. With a parallel flow arrangement, the dampers or other means used to control the flow of air must be adequate to prevent chilled air from entering the furnace and, if manually operated, must be equipped with means to prevent operation of either unit unless the damper is in the full heat or cool position.

When the furnace is heating, the temperature of the return air entering the furnace must be between **55°F** and **100°F**

WARNING

TO AVOID PERSONAL INJURY OR DEATH DUE TO ELECTRICAL SHOCK, TURN OFF POWER TO THE FURNACE BEFORE CHANGING SPEED TAPS.

CIRCULATING AIR AND FILTERS
DUCTWORK - AIR FLOW

Duct systems and register sizes must be properly designed for the C.F.M. and external static pressure rating of the furnace. Ductwork should be designed in accordance with the recommended methods of “Air Conditioning Contractors of America” manual D.

A duct system should be installed in accordance with Standards of the National Board of Fire Underwriters for the Installation of Air Conditioning, Warm Air Heating and Ventilating Systems, Pamphlets No. 90A and 90B.

A return air filter is not supplied with the furnace. The installer must supply a means of filtering all of the return air. Filter(s) shall comply with UL900 or CAN/ULC-S111 Standards. If the furnace is installed without filters, and is not covered by the warranty.

Upflow furnaces with air delivery of less than 1800 CFM:

Use one side return or one bottom return ductwork connection.

Upflow furnaces with air delivery of 1800 CFM or higher:

Use two side returns or one side return and one bottom return connection.

Guide dimples locate the side and bottom return cutout locations. Use a straight edge to scribe lines connecting the dimples. Cut out the opening on these lines. An undersized opening will cause reduced airflow. For bottom return connection, remove the bottom of the cabinet before setting the furnace on the raised platform or return air duct.

A closed return duct system must be used, with the return duct connected to the furnace. ***NOTE:*** *Ductwork must never be attached to the back of the furnace.* Supply and return connections to the furnace may be made with flexible joints to reduce noise transmission, if desired. If a central return is used, a connecting duct must be installed between the unit and the utility room wall so the blower will not interfere with combustion air or draft. The room, closet, or alcove must not be used as a return air chamber.

When the furnace is used in connection with a cooling unit, the furnace should be installed in parallel with or on the upstream side of the cooling unit to avoid condensation in the heating element. With a parallel flow arrangement, the dampers or other means used to control the flow of air must be adequate to prevent chilled air from entering the furnace and, if manually operated, must be equipped with means to prevent operation of either unit unless the damper is in the full heat or cool position.

When the furnace is heating, the temperature of the return air entering the furnace must be between **55°F** and **100°F**.

SYSTEM OPERATION

2 Stage Status Codes

Menu Description	LED Display		Notes
	Main Menu	Option Menu	
Active Alarm menu	Err	Exx	(xx: code numbers)
Last 6 Faults	LGF	Exx	(xx: code numbers)
Code Release Number	Cr	CR Number	
Reset to Factory Default	rFd	yes, no	
Blower Speed for Continous Fan Mode	FSd	Fxx	(xx: Blower Speed Number F01, F02..)
Blower Speed for 1st Stage Compressor Mode	AC1	Fxx	(xx: Blower Speed Number F01, F02..)
Blower Speed for 2nd Stage Compressor Mode	AC2	Fxx	(xx: Blower Speed Number F01, F02..)
Cool On Delay	Cnd	Delay, Seconds	Default set at 7 Secs, Adjustments can be made in 7 Secs increments from 0 to 35 Secs
Cool Off Delay	CFd	Delay, Seconds	Default set at 65 Secs, Adjustments can be made in 5 Secs increments from 0 to 120 Secs
Blower Speed for 1st Stage Gas Heat Mode	GA1	Fxx	(xx: Blower Speed Number F01, F02..)
Blower Speed for 2nd Stage Gas Heat Mode	GA2	Fxx	(xx: Blower Speed Number F01, F02..)
Gas Heat On Delay	Gnd	Delay, Seconds	Default set at 30 Secs, Adjustments can be made in 5 Secs increments from 5 to 30 Secs
Gas heat Off Delay	GFd	Delay, Seconds	Default set at 90 Secs, Adjustments can be made in 30 Secs increments from 30 to 180 Secs
Automatic Heat Staging - For Two Stage Control	AHS	no, 10, 20, 30, 60, AUt	Refer to Section "CHANGING HEATING MODE SETTING"

2 Stage Status Codes

Mode	Main Menu
Idle	IdL
Continous Fan	FAn
Compressor Cooling, Low Stage	1AC
Compressor Cooling, High Stage	2AC
Gas heat, Low Stage	9H1
Gas heat, High Stage	9H2
OEM test Mode	EOL

SCHEDULED MAINTENANCE

WARNING

HIGH VOLTAGE
DISCONNECT ALL POWER BEFORE SERVICING OR CHANGING ANY ELECTRICAL WIRING. MULTIPLE POWER SOURCES MAY BE PRESENT. FAILURE TO DO SO MAY CAUSE PROPERTY DAMAGE, PERSONAL INJURY OR DEATH.

CAUTION

IF YOU MUST HANDLE THE IGNITOR, HANDLE WITH CARE. TOUCHING THE IGNITOR BODY WITH BARE FINGERS, ROUGH HANDLING, OR VIBRATION COULD RESULT IN EARLY IGNITOR FAILURE. ONLY A QUALIFIED SERVICER SHOULD EVER HANLDE THE IGNITOR.

ANNUAL INSPECTION

The furnace should be inspected by a qualified installer, or service agency at least once per year. This check should be performed at the beginning of the heating season. This will ensure that all furnace components are in proper working order and that the heating system functions appropriately. Pay particular attention to the following items. Repair or service as necessary.

- Flue pipe system. Check for blockage and/or leakage. Check the outside termination and the connections at and internal to the furnace.
- Combustion air intake pipe system (where applicable). Check for blockage and/or leakage. Check the outside termination and the connection at the furnace.
- Heat exchanger. Check for corrosion and/or buildup within the heat exchanger passageways.
- Burners. Check for proper ignition, burner flame, and flame sense.
- Drainage system. Check for blockage and/or leakage. Check hose connections at and internal to furnace.
- Wiring. Check electrical connections for tightness and/or corrosion. Check wires for damage.
- Filters.

AIR FILTER

WARNING

NEVER OPERATION FURNACE WITHOUT A FILTER INSTALLED AS DUST AND LINT WILL BUILD UP ON INTERNAL PARTS RESULTING IN LOSS OF EFFICIENCY, EQUIPMENT DAMAGE, AND POSSIBLE FIRE.

Filters must be used with this furnace. Filters do not ship with these furnaces but must be provided by the installer for proper furnace operation.

Remember that dirty filters are the most common cause of inadequate heating or cooling performance.

WARNING

HIGH VOLTAGE
DISCONNECT ALL POWER BEFORE SERVICING, REMOVING THE FILTER OR PERFORMING ANY MAINTENANCE. MULTIPLE POWER SOURCES MAY BE PRESENT. FAILURE TO DO SO MAY CAUSE PROPERTY DAMAGE, PERSONAL INJURY OR DEATH.

MAINTENANCE

Improper filter maintenance is the most common cause of inadequate heating or cooling performance. Filters should be cleaned (permanent) or replaced (disposable) every two months or as required. It is the owner's responsibility to keep air filters clean. When replacing a filter, it must be replaced with a filter of the same type and size.

FILTER REMOVAL

Depending on the installation, differing filter arrangements can be applied. Filters can be installed in the central return register, the bottom of the blower compartment (upflow only), a side panel external filter rack kit (upflow only), or the ductwork above a counterflow furnace. A media air filter or electronic air cleaner can be used as an alternate filter. The filter sizes given in the *Product Design* section of this manual or the product *Specification Sheet* must be followed to ensure proper unit performance. Refer to the following information for removal and installation of filters.

FILTER REMOVAL PROCEDURE

MEDIA AIR FILTER OR ELECTRONIC AIR CLEANER REMOVAL

Follow the manufacturer's directions for service.

UPRIGHT COUNTERFLOW FILTER REMOVAL

To remove filters from the ductwork above an upright counterflow installation:

Turn off electrical power to furnace.

Remove access door in ductwork above furnace.

Remove filters.

Remove blower compartment door. Vacuum compartment. Replace blower compartment door.

Replace filters opposite of removal.

Replace access door in ductwork.

HORIZONTAL UNIT FILTER REMOVAL

Filters in horizontal installations are located in the central return register.

SCHEDULED MAINTENANCE

Induced Draft and Circulation Blowers

The bearings in the induced draft blower and circulator blower motors are permanently lubricated by the manufacturer. No further lubrication is required. Check motor windings for accumulation of dust which may cause overheating. Clean as necessary.

Flame Sensor (Qualified Servicer Only)

Under some conditions, the fuel or air supply can create a nearly invisible coating on the flame sensor. This coating acts as an insulator, causing a drop in the flame sensing signal. If this occurs, a qualified servicer must carefully clean the flame sensor with steel wool. After cleaning, the flame sensor output should be as listed on the specification sheet.

Burners

WARNING

HIGH VOLTAGE
Electrical components are contained in both compartments. To avoid electrical shock, injury or death, do not remove any internal compartment covers or attempt any adjustment. Contact a qualified service agent at once if an abnormal flame appearance should develop.

Periodically during the heating season make a visual check of the burner flames. Turn the furnace on at the thermostat. Wait a few minutes since any dislodged dust will alter the normal flame appearance. Flames should be stable, quiet, soft and blue with slightly orange tips. They should not be yellow. They should extend directly outward from the burner ports without curling downward, floating or lifting off the ports.

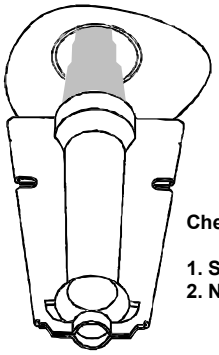

Check the burner flames for:

1. Stable, soft and blue
2. Not curling, floating, or lifting off.

Burner Flame

Test Equipment

Proper test equipment for accurate diagnosis is as essential as regular hand tools.

The following is a must for every service technician and service shop.

- Thermometers or thermocouple meter (optional) - To measure temperatures.
- Multi-Meter - To measure amperage and voltage, to test continuity, capacitors, and motor windings.
- Manometer - To measure static pressure, pressure drop across coils, filters and draft, and to measure inlet and manifold gas pressures.

Other recording type instruments can be essential in solving abnormal problems, however, in many instances they may be rented from local sources.

Proper equipment promotes faster, more efficient service and accurate repairs resulting in fewer call backs.

Heating Performance Test

Before attempting to diagnose an operating fault code, run a Heating Performance Test to determine if the heating system is performing within 5% of the BTU input found on the rating plate of the unit being tested. To conduct a heating performance test, the BTU input to the unit must be calculated (see Clocking a Gas Meter). Before clocking a gas meter, contact your local utility to provide the caloric value (BTU content) of the natural gas in the area.

It is also important to confirm the airflow (CFM) is within the temperature rise range (see Airflow Data in spec sheet) and external static pressure range (approximately 0.5” water column). How-to instructions can be found in the service manual under Checking External Static Pressure and Checking Temperature Rise.

SCHEDULED MAINTENANCE

CLOCKING A GAS METER

1. Turn off all gas appliances in the home.
2. Turn on the furnace. Ensure the furnace is operating at a 100% firing rate on 2 stage and modulating furnace product.
3. Once heating cycle is at a steady state (typically 15 minutes of operation), use a stopwatch to time how long it takes the smallest unit of measure dial on the gas meter to make a full revolution. In Table 1, one cubic foot is selected. The smallest unit of measure will vary depending on the gas meter.

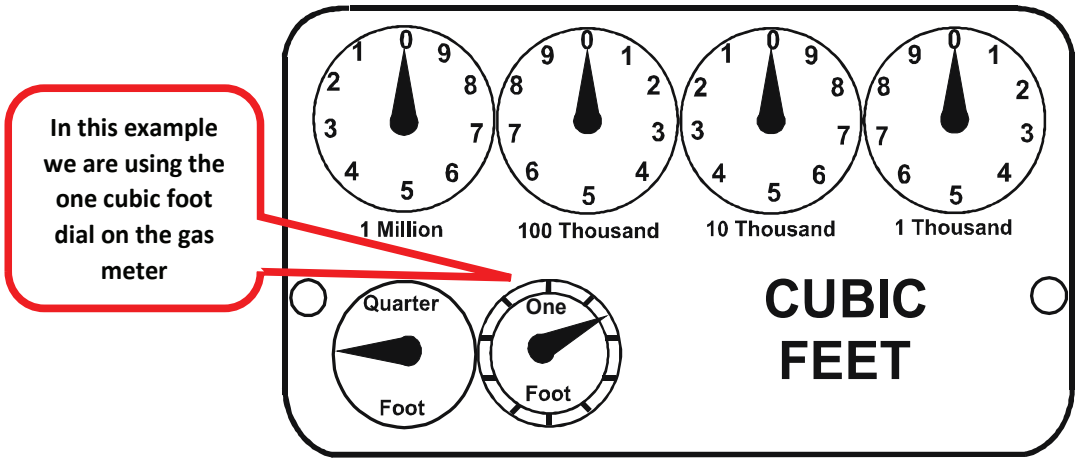

TABLE 1

4. Using Table 2 below, find the number of seconds it took for the dial to make a full revolution. To the right of that number of seconds and below the Size of Test Dial (selected in step 3 and shown in Table 1) will be the Cubic Feet per Hour (CFH).

Locate 40 seconds for one revolution in the chart below

Then locate the 1 cu ft dial column and select the corresponding CFH from the 40 seconds for one revolution row

GAS RATE -- CUBIC FEET PER HOUR											
Seconds for One Revolution	Size of Test Dial					Seconds for One Revolution	Size of Test Dial				
	1/4 cu/ft	1/2 cu/ft	1 cu/ft	2 cu/ft	5 cu/ft		1/4 cu/ft	1/2 cu/ft	1 cu/ft	2 cu/ft	5 cu/ft
10	90	180	360	720	1800	36	25	50	100	200	500
11	82	164	327	655	1636	37	--	--	97	195	486
12	75	150	300	600	1500	38	23	47	95	189	474
13	69	138	277	555	1385	39	--	--	92	185	462
14	64	129	257	514	1286	40	22	45	90	180	450
15	60	120	240	480	1200	41	--	--		176	439
16	56	113	225	450	1125	42	21	43	86	172	429
17	53	106	212	424	1059	43	--	--	--	167	419
18	50	100	200	400	1000	44	--	41	82	164	409
19	47	95	189	379	947	45	20	40	80	160	400
20	45	90	180	360	900	46	--	--	78	157	391
21	43	86	171	343	857	47	19	38	76	153	383
22	41	82	164	327	818	48	--	--	75	150	375
23	39	78	157	313	783	49	--	--	--	147	367
24	37	75	150	300	750	50	18	36	72	144	360
25	36	72	144	288	720	51	--	--	--	141	355
26	34	69	138	277	692	52	--	--	69	138	346
27	33	67	133	265	667	53	17	34	--	136	340
28	32	64	129	257	643	54	--	--	67	133	333
29	31	62	124	248	621	55	--	--	--	131	327
30	30	60	120	240	600	56	16	32	64	129	321
31	--	--	116	232	581	57	--	--	--	126	316
32	28	56	113	225	563	58	--	31	62	124	310
33	--	--	109	218	545	59	--	--	--	122	305
34	26	53	106	212	529	60	15	30	60	120	300
35	--	--	103	206	514						

TABLE 2

SCHEDULED MAINTENANCE

5. Use this formula to verify the Cubic Feet per Hour (CFH) input determined in step 4 is correct:

(3600 x Gas Meter Dial Size) / Time (seconds) = Cubic Feet per Hour (CFH)

3600 is used as there are 60 seconds in a minute and 60 minutes in an hour. 60x60=3600

6. Check with your local utility for actual BTU content (caloric value) of natural gas in the area (the average is 1025 BTU's).
7. Use this formula to calculate the BTU/HR input (See BTU/HR Calculation Example):

Cubic Feet per Hour (CFH) x BTU content of your natural gas = BTU/HR input

8. Should the figure you calculated not fall within five (5) percent of the nameplate rating of the unit, adjust the gas valve pressure regulator or resize orifices. To adjust the pressure regulator on the gas valve, turn downward (clockwise) to increase pressure and input, and upward (counterclockwise) to decrease pressure and input. A properly operating unit must have the BTU per hour input and CFM of air, within the limits shown to prevent short cycling of the equipment. As the external static pressure goes up, the temperature rise will also increase. Consult the proper tables for temperature rise limitation.

BTU/HR Calculation Example:

The unit being tested takes 40 seconds for the 1 cubic foot dial to make one complete revolution. Using the chart, this translates to 90 cubic feet per hour. Based upon the assumption that one cubic foot of natural gas has 1,025 BTU's (Check with your local utility for actual BTU content), the **calculated input is 92,250 BTU's per hour.**

Furnace Nameplate Input in this example: 90,000 BTU/HR

Calculated Gas Input in this example: 92,250 BTU/HR

This example is within the 5% tolerance input and does not need adjustment.

SERVICING

As more and more electronic's are introduced to the Heating Trade, Polarization of incoming power and phasing of primary to secondary voltage on transformers becomes more important.

Polarization has been apparent in the Appliance industry since the introduction of the three prong plug, however, the Heating Industry does not use a plug for incoming power, but is hard wired.

Some of the electronic boards being used today, with flame rectification, will not function properly and/or at all without polarization of incoming power. Some also require phasing between the primary and secondary sides of step-down transformers.

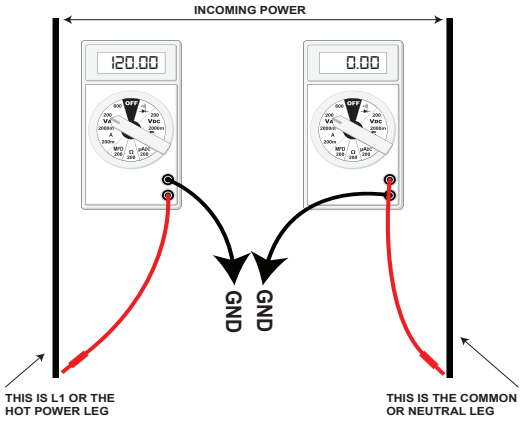

These then should be wired to the furnace accordingly.

CHECKING FOR PHASING - PRIMARY TO SECONDARY OF UNMARKED TRANSFORMERS*

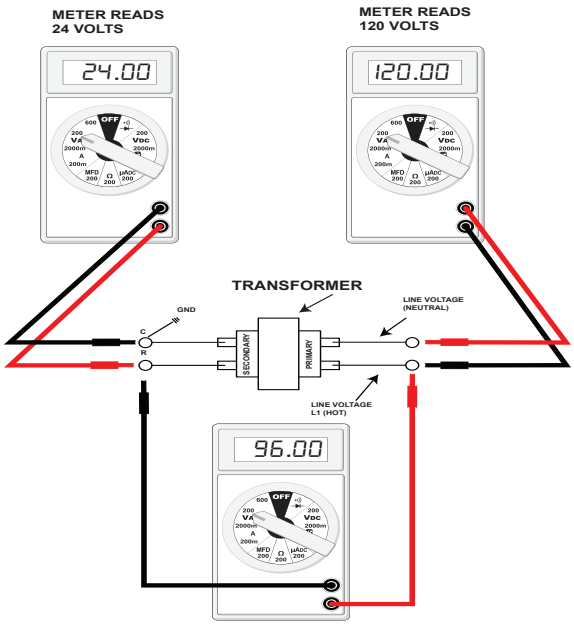

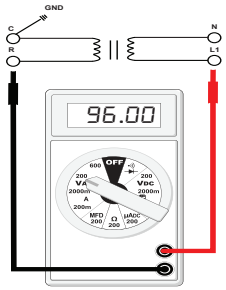

READS 96 VOLTS - IN PHASE

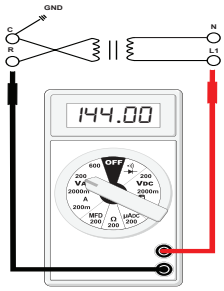

READS 144 VOLTS - OUT OF PHASE

If meter reads approximately 96 volts - the primary to secondary are in phase - if reads approximately 144 volts out of phase - reverse low voltage wires.

***NOTE:** For flame rectification the common side of the secondary voltage (24 V) is cabinet grounded. If you were to bench test a transformer the primary neutral and secondary common must be connected together for testing purposes.

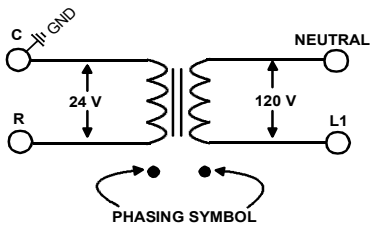

Some transformers will display phasing symbols as shown in the illustration to the left to assist in determining proper transformer phasing.

Checking for polarization and phasing should become a habit in servicing. Let's start now.

NOTE: PCBBF139 ignition control has a diagnostic flash code for reversed polarity.

SERVICING

CHECKING VOLTAGE

WARNING

HIGH VOLTAGE
DISCONNECT ALL POWER BEFORE SERVICING OR CHANGING ANY ELECTRICAL WIRING. MULTIPLE POWER SOURCES MAY BE PRESENT. FAILURE TO DO SO MAY CAUSE PROPERTY DAMAGE, PERSONAL INJURY OR DEATH.

1. Remove cover from the Junction Box and gain access to incoming power lines.

With Power ON:

WARNING

LINE VOLTAGE NOW PRESENT

2. Using a voltmeter, measure the voltage across the hot and neutral connections.

NOTE: To energize the furnace, the Door Interlock Switch must be engaged at this point.

3. No reading - indicates open wiring, open fuse, no power, or faulty Door Interlock Switch from unit to fused disconnect service. Repair as needed.
4. With ample voltage at line voltage connectors, energize the furnace blower motor by jumpering terminals R to G on the integrated ignition control.
5. With the blower motor in operation, the voltage should be 115 volts ± 10 percent.
6. If the reading falls below the minimum voltage, check the line wire size. Long runs of undersized wire can cause low voltage. If wire size is adequate, notify the local power company of the condition.
7. After completing check and/or repair, replace Junction Box cover and reinstall the service panel doors.
8. Turn on electrical power and verify proper unit operation.

CHECKING WIRING

WARNING

DISCONNECT ALL POWER BEFORE SERVICING.

1. Check wiring visually for signs of overheating, damaged insulation and loose connections.
2. Use an ohmmeter to check continuity of any suspected open wires.
3. If any wires must be replaced, replace with AWM, 105°C. 2/64 thick insulation of the same gauge or its equivalent.

CHECKING THERMOSTAT, WIRING

WARNING

DISCONNECT ALL POWER BEFORE SERVICING.

1. Remove the blower compartment door to gain access to the thermostat low voltage wires located at the furnace integrated control module terminals.
2. Remove the thermostat low voltage wires at the furnace control panel terminal board.
3. Jumper terminals R to W (or W1 and W2 for two-stage models) on the integrated ignition control.

With Power On (and Door Interlock Switch closed):

WARNING

LINE VOLTAGE NOW PRESENT

4. Induced Draft Motor must run and pull in pressure switch.
5. If the hot surface ignitor heats and at the end of the ignitor warm-up period the gas valve opens and the burners ignite, the trouble is in the thermostat or wiring.
6. With power off, check the continuity of the thermostat and wiring. Repair or replace as necessary.

If checking the furnace in the air conditioning mode, proceed as follows.

7. With power off, Jumper terminals R to Y
8. Turn on the power.
9. If the furnace blower motor starts and the condensing unit runs, then the trouble is in the thermostat or wiring. Repair or replace as necessary.
10. After completing check and/or repair of wiring and check and/or replacement of thermostat, reinstall blower compartment door.
11. Turn on electrical power and verify proper unit operation.

CHECKING TRANSFORMER AND CONTROL CIRCUIT

A step-down transformer 120 volt primary to 24 volt secondary, 40 VA (Heating and Cooling Models) supplies ample capacity of power for either operation.

WARNING

HIGH VOLTAGE
DISCONNECT ALL POWER BEFORE SERVICING OR CHANGING ANY ELECTRICAL WIRING. MULTIPLE POWER SOURCES MAY BE PRESENT. FAILURE TO DO SO MAY CAUSE PROPERTY DAMAGE, PERSONAL INJURY OR DEATH.

1. Remove blower compartment door to gain access to the thermostat low voltage wires located at the furnace integrated control module.

SERVICING

2. Remove the thermostat low voltage wires at the furnace integrated control module terminals.

With Power On (and Door Interlock Switch closed):

WARNING

LINE VOLTAGE NOW PRESENT

3. Use a voltmeter, check voltage across terminals R and C. Must read 24 VAC.
4. No voltage indicates faulty transformer, open fuse, bad wiring, bad splice, or open door interlock switch.
5. Check transformer primary voltage at incoming line voltage connections, fuse, splices, and blower door interlock switch.
6. If line voltage is available to the primary side of transformer and not at secondary side, the transformer is inoperative. Replace.
7. After completing check and/or replacement of transformer and check and/or repair of control circuit, reinstall blower compartment door.
8. Turn on electrical power and verify proper unit operation.

WARNING

LINE VOLTAGE NOW PRESENT

WARNING

HIGH VOLTAGE
DISCONNECT ALL POWER BEFORE SERVICING OR INSTALLING THIS UNIT. MULTIPLE POWER SOURCES MAY BE PRESENT. FAILURE TO DO SO MAY CAUSE PROPERTY DAMAGE, PERSONAL INJURY OR DEATH.

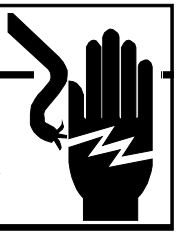

CHECKING AIR CIRCULATOR BLOWER MOTOR (MULTI-SPEED ECM MOTOR)

WARNING

DISCONNECT ALL POWER BEFORE SERVICING.

1. Remove blower compartment door to gain access to the circulator blower motor and integrated ignition control.
2. Check for any obstruction that would keep the fan wheel / fan motor from turning.
3. Check wiring, the motor has two wiring harnesses, a main harness and a control harness. The main pin harness has:

   White neutral wire connected to the Neutral terminal on the control board.

   Black wire connected to the CIRC H terminal on the control board.

   Red wire connected to the COM terminal, which is a female spade connection next to the T1 – T5 wires on the control board.

   Green ground wire connected to cabinet ground

   The control harness has:

   The nine speed ECM motor requires a line voltage power supply (black connected to CIRC H and white connected to neutral on the control board) as well as a signal on one or two of the speed taps (T1-T5).

   The speed tap voltage is 6-17 vDC and can vary depending speed selection. The voltage reading from any one of the speed taps is referenced between the female COM terminal of the motor speed tap harness.

CONNECTOR ID	DESCRIPTION	CONNECTOR VOLTAGE (REFERENCE)
L	LINE, L1	LINE, L1
G	GROUND	CHASSIS GROUND
N	LINE, L2	LINE, L2
C	SIGNAL COMMON	COMMON
1	TAP 1	6 - 17 VDC
2	TAP 2	6 - 17 VDC
3	TAP 3	6 - 17 VDC
4	TAP 4	6 - 17 VDC
5	TAP 5	6 - 17 VDC

Speed	9-Tap Mode (Energized Tap Signal)				
	1	2	3	4	5
1	ON	OFF	OFF	OFF	OFF
2	OFF	ON	OFF	OFF	OFF
3	OFF	x	ON	OFF	OFF
4	OFF	x	x	ON	OFF
5	OFF	x	x	x	ON
6	ON	ON	OFF	OFF	OFF
7	ON	x	ON	OFF	OFF
8	ON	x	x	ON	OFF
9	ON	x	x	x	ON

ON = The tap is energized (6 - 17vDC)

OFF = The tap is not energized

x = The tap can be either ON or OFF

SERVICING

CHECKING DUCT STATIC

The maximum and minimum allowable external static pressures are found in the specification section. These tables also show the amount of air being delivered at a given static by a given motor speed or pulley adjustment.

The furnace motor cannot deliver proper air quantities (CFM) against statics other than those listed.

Too great of an external static pressure will result in insufficient air that can cause excessive temperature rise, resulting in limit tripping, etc. Whereas not enough static may result in motor overloading.

To determine proper air movement, proceed as follows:

1. With clean filters in the furnace, use a manometer to measure the static pressure of the return duct at the inlet of the furnace. (Negative Pressure)
2. Measure the static pressure of the supply duct. (Positive Pressure)
3. Add the two (2) readings together for total external static pressure.

NOTE: Both readings may be taken simultaneously and read directly on the manometer if so desired. If an air conditioner coil or Electronic Air Cleaner is used in conjunction with the furnace, the readings must also include theses components, as shown in the following drawing.

4. Consult proper tables for the quantity of air.

If the total external static pressure exceeds the minimum or maximum allowable statics, check for closed dampers, registers, undersized and/or oversized poorly laid out duct work

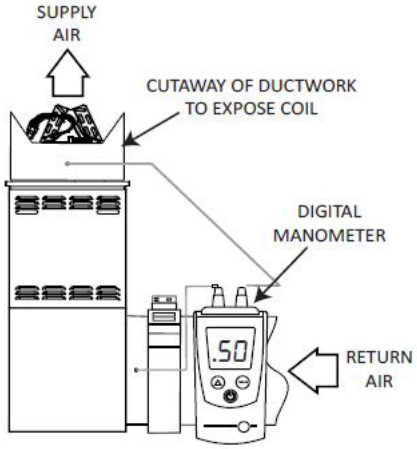

Checking Static Pressure

CHECKING TEMPERATURE RISE

The more air (CFM) being delivered through a given furnace, the less the rise will be; so the less air (CFM) being delivered, the greater the rise. The temperature rise should be adjusted in accordance to a given furnace specifications and its external static pressure. An incorrect temperature rise may result in condensing in or overheating of the heat exchanger. An airflow and temperature rise table is provided in the blower performance specification section. Determine and adjust temperature rise as follows:

1. Operate furnace with burners firing for approximately ten minutes. Check BTU input to furnace - do not exceed input rating stamped on rating plate. Ensure all registers are open and all duct dampers are in their final (fully or partially open) position.
2. Place thermometers in the return and supply ducts as close to the furnace as possible. Thermometers must not be influenced by radiant heat by being able to “see” the heat exchanger.

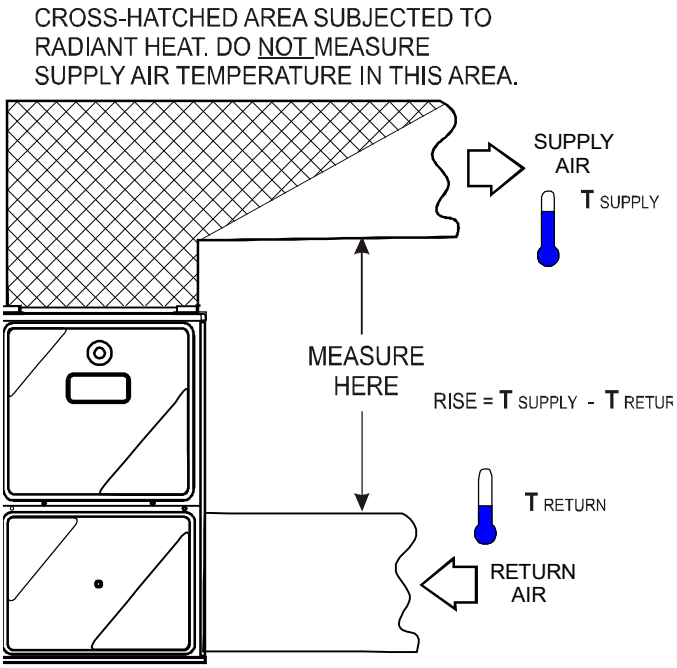

Checking Temperature Rise

3. Subtract the return air temperature from the supply air temperature to determine the air temperature rise. Allow adequate time for thermometer readings to stabilize.
4. Adjust temperature rise by adjusting the circulator blower speed. Increase blower speed to reduce temperature rise. Decrease blower speed to increase temperature rise. Refer to *Circulator Blower Speed* section in the Product Design section of this manual for speed changing details. Temperature rise is related to the BTUH output of the furnace and the amount of air (CFM) circulated over the heat exchanger. Measure motor current draw to determine that the motor is not overloaded during adjustments.

SERVICING

CHECKING PRIMARY LIMIT CONTROL

All primary limit controls are nonadjustable, automatic reset, bi-metal type limit control. Refer to the following drawing for the location of the primary limit.

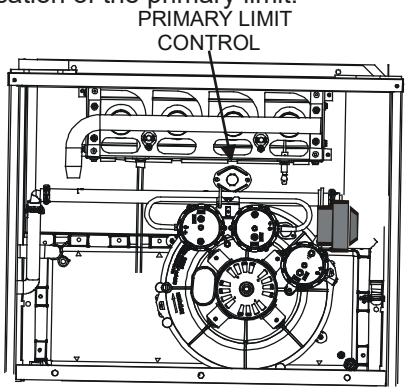

Primary Limit Control Location (90% Upflow Furnace Shown)

The following drawing illustrates the style of limit switches used on the 90% furnaces.

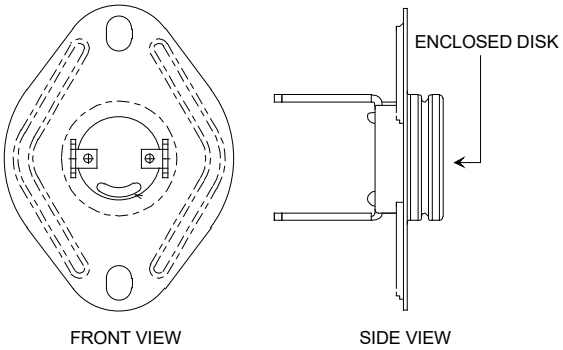

Primary Limit Control Style

WARNING

HIGH VOLTAGE

DISCONNECT ALL POWER BEFORE SERVICING OR CHANGING ANY ELECTRICAL WIRING. MULTIPLE POWER SOURCES MAY BE PRESENT. FAILURE TO DO SO MAY CAUSE PROPERTY DAMAGE, PERSONAL INJURY OR DEATH.

1. Remove burner compartment door to gain access to the primary limit.
2. Remove low voltage wires at limit control terminals.
3. With an ohmmeter, test between these two terminals as shown in the following drawing. The ohmmeter should read continuous unless heat exchanger temperature is above limit control setting. If not as above, replace the control.

LIMIT FAULT CODES

If the control detects the high limit circuit open, the RED LED will flash FOUR times and energize the inducer and indoor blower.

If the limit circuit opens five times within a single call for heat, the furnace will go into lockout for one hour. The RED LED will display a FOUR flash code during this time. The control board can be reset by cycling 115 volt power to the furnace.

If the limit circuit opens and does not close within five minutes, the control assumes the blower has failed the RED LED will flash ELEVEN times.

If the limit circuit opens and does not close within fifteen minutes, the control assumes the manual rollout or fuse has opened and the RED LED will flash FIVE times. The control will enter a one hour lockout and the inducer will run continuously.

In an open limit condition the red LED will flash as described above but the error code will not be stored in memory until the limit resets or until 15 minutes has elapsed. So if the limit resets in less than 5 minutes a four flash code will be stored. If the limit resets in more than 5 but less than 15 minutes, an eleven flash code will be stored. If the limit is still open after 15 minutes, a five flash code will be stored.

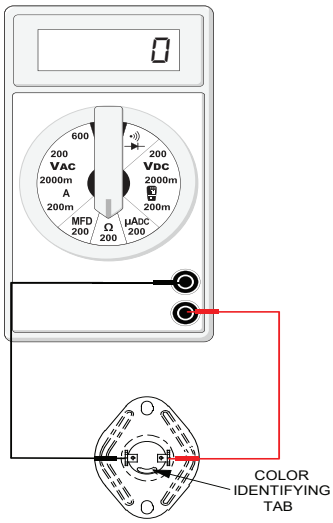

Testing Primary Limit Control

4. After completing check and/or replacement of primary limit control, reinstall burner compartment door.
5. Turn on electrical power and verify proper unit operation.

CHECKING AUXILIARY LIMIT CONTROL

The auxiliary limit control is designed to prevent furnace operation in case of main blower failure in horizontal installations. It may also open if the power supply is interrupted while the furnace is firing.

The auxiliary limit control is suitable for both horizontal right and horizontal left installations. Regardless of airflow direction, it does not need to be relocated. The (2) two auxiliary limits are located on the blower housing (one on each side), as shown in the following illustration.

SERVICING

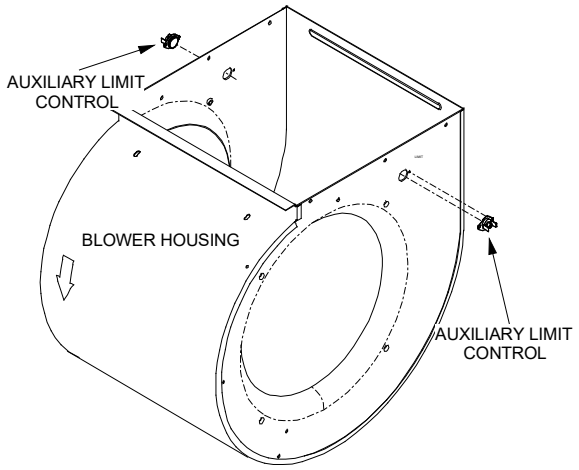

Auxiliary Limit Control Location

WARNING

HIGH VOLTAGE
DISCONNECT ALL POWER BEFORE SERVICING OR INSTALLING THIS UNIT. MULTIPLE POWER SOURCES MAY BE PRESENT. FAILURE TO DO SO MAY CAUSE PROPERTY DAMAGE, PERSONAL INJURY OR DEATH.

1. Remove blower compartment door to gain access to the auxiliary.
2. Remove the wires from the auxiliary limit control terminals.
3. Using an ohmmeter, test for continuity across the two terminals.

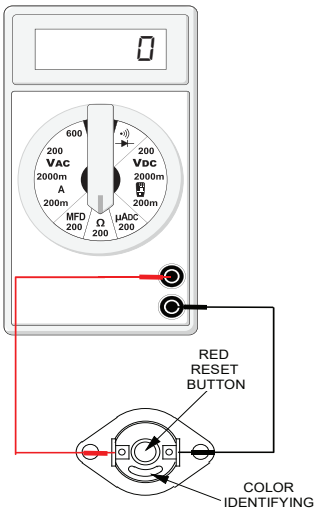

Testing Auxiliary Limit Control

WARNING

TO AVOID POSSIBLE FIRE, ONLY RESET THE AUXILIARY LIMIT CONTROL ONCE. IF IT SHOULD OPEN A SECOND TIME, A QUALIFIED SERVICER MUST DETERMINE WHY THE AUXILIARY LIMIT OPENED BEFORE RESETTING AGAIN.

CHECKING FLAME ROLLOUT CONTROL

A temperature activated manual reset control is mounted to the manifold assembly as shown in the following illustration.

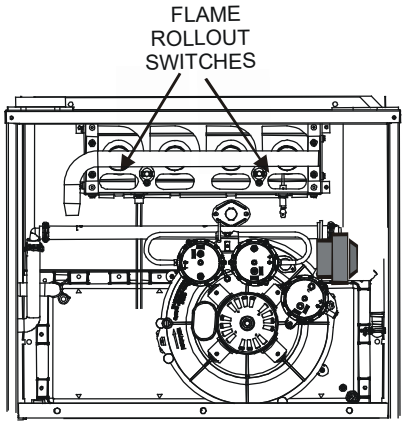

Flame Rollout Switch Location
(90% Upflow Furnace Shown, Counterflow Similar)

The control is designed to open should a flame roll out occur. An over firing condition or flame impingement on the heat shield may also cause the control to open. If the rollout control opens, the air circulation blower will run continuously.

WARNING

LINE VOLTAGE NOW PRESENT

1. Remove the burner compartment door to gain access to the rollout switch(es) mounted to burner bracket.
2. Reset the manual roll out switch
3. Remove wires from roll out switch
4. Using an ohmmeter, check for continuity across the switch.
5. If the switch will not close after manually resetting, it must be replaced.
6. Measure the voltage between each side of the rollout control and ground during the ignition attempt. If a roll out switch has tripped, it is important to find out why. Possible causes could be flame impingement, orifice plate out of position, burners with excessive cross-over slot dimension, over-firing, improper orifices, improper gas pressure, air leaking from around the heat exchanger into the burner compartment, air leaking through the heat exchanger itself.
7. After check and/or replacement of rollout switch, reinstall burner compartment door and verify proper unit operation.

SERVICING

INDUCED DRAFT BLOWER MOTOR

WARNING

HIGH VOLTAGE
DISCONNECT ALL POWER BEFORE SERVICING OR INSTALLING THIS UNIT. MULTIPLE POWER SOURCES MAY BE PRESENT. FAILURE TO DO SO MAY CAUSE PROPERTY DAMAGE, PERSONAL INJURY OR DEATH.

1. Remove burner compartment door to gain access to the induced draft blower motor.
2. Disconnect the motor wire leads from its connection point at the induced draft motor.
3. Using a ohmmeter, test for continuity between each of the motor leads.
4. Touch one probe of the ohmmeter to the motor frame (ground) and the other probe in turn to each lead.

   If the windings do not test continuous or a reading is obtained to ground, replace the motor.
5. If the windings have a continuity reading, reconnect wires. Turn power on to the furnace and turn the thermostat on in the heating mode. Check voltage for 115V at the induced draft motor terminals during the trial for ignition. If you have 115V and the motor does not run, replace the induced draft motor.
6. After completing check and/or replacement of induced draft motor, reinstall burner compartment door.
7. Turn on electrical power and verify proper unit operation.

CHECKING GAS VALVE (Redundant)

A combination redundant operator type gas valve which provides all manual and automatic control functions required for gas fired heating equipment is used.

The valve provides control of main burner gas flow, pressure regulation, and 100 percent safety shut-off.

WARNING

DISCONNECT ALL POWER BEFORE SERVICING

Two stage gas valves always require 24 volts between common and low fire (main coil) to open. Also, the furnace front cover pressure switch is wired in series with the low (main) solenoid of the gas valve. In the event of a non functioning gas valve, always check the front cover pressure switch.

CHECKING MAIN BURNERS

Burners have been redesigned for 34.5” chassis furnaces. Overall length and width dimensions remain the same as 40” model burners. The burners used 34.5” models have burner head insert with larger diameter center hole and a larger number of surrounding holes.

The main burners are used to provide complete combustion of various fuels in a limited space, and transfer this heat of the burning process to the heat exchanger.

Proper ignition, combustion, and extinction are primarily due to burner design, orifice sizing, gas pressure, primary and secondary air, vent and proper seating of burners.

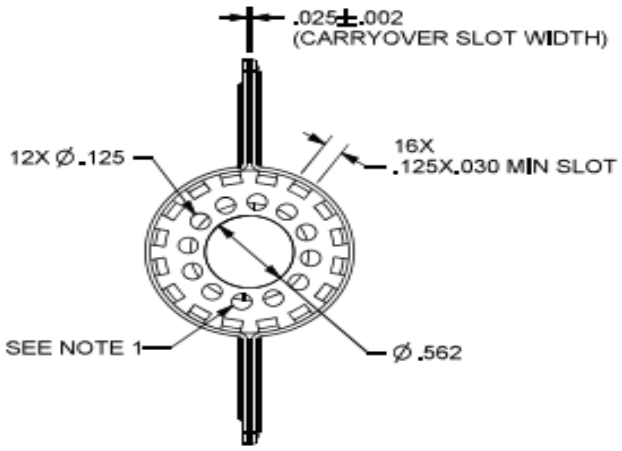

34.5” Burner

WARNING

DISCONNECT ALL GAS AND ELECTRICAL POWER SUPPLY.

In checking main burners, look for signs of rust, oversized and undersized carry over ports restricted with foreign material, etc, burner cross-over slots should not be altered in size.

CHECKING ORIFICES

*M9C80/*C9C80 model furnaces have factory installed #45 natural gas orifices.

The only time resizing is required is when a reduction in firing rate is required for an increase in altitude or a furnace is being converted for use with LP gas.

Orifices should be treated with care in order to prevent damage. They should be removed and installed with a box-end wrench in order to prevent distortion. In no instance should an orifice be peened over and redrilled. This will change the angle or deflection of the vacuum effect or entraining of primary air, which will make it difficult to adjust the flame properly. This same problem can occur if an orifice spud of a different length is substituted.

WARNING

DISCONNECT ALL GAS AND ELECTRICAL POWER SUPPLY.

1. Check orifice visually for distortion and/or burrs.
2. Check orifice size with orifice sizing drills.

SERVICING

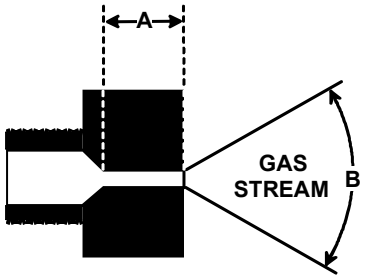

The length of Dimension “A” determines the angle of Gas Stream “B”.

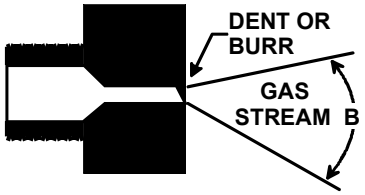

A dent or burr will cause a severe deflection of the gas stream.

CHECKING GAS PRESSURE

Gas Supply Pressure Measurement

Gas Pressure Test

The line pressure supplied to the gas valve must be within the range specified below. The supply pressure can be measured at the gas valve inlet pressure tap or at a hose fitting installed in the gas piping drip leg. The supply pressure must be measured with the burners operating. To measure the gas supply pressure, use the following procedure.

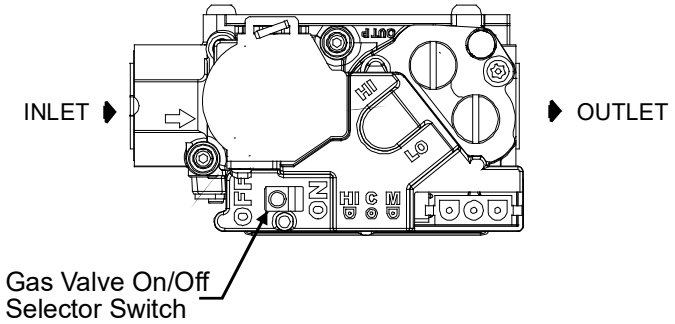

White-Rodgers Model 36J54 (Two-Stage)

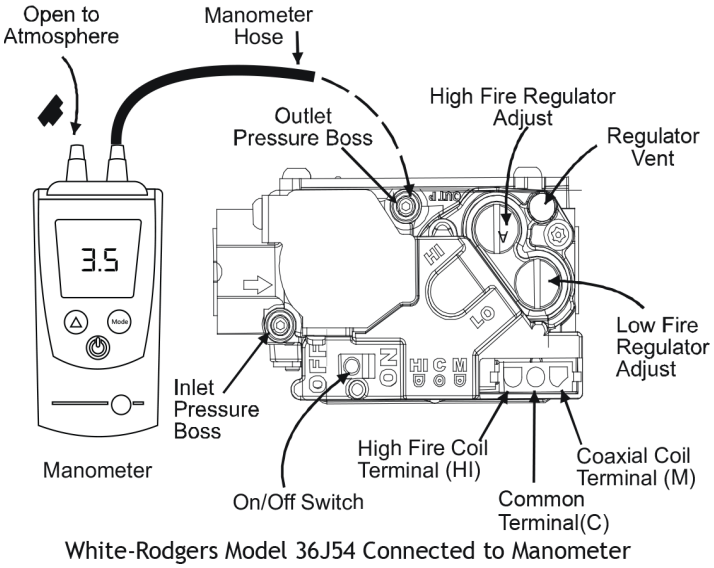

White-Rodgers Model 36J54 Connected to Manometer

1. Turn OFF gas to furnace at the manual gas shutoff valve external to the furnace.
2. Connect a calibrated manometer (or appropriate gas pressure gauge) at either the gas valve inlet pressure tap or the gas piping drip leg. See White-Rodgers 36J54 gas valve figure for location of inlet pressure tap.

INLET GAS SUPPLY PRESSURE		
Natural Gas	Minimum: 4.5" w.c.	Maximum: 10.0" w.c.
Propane Gas	Minimum: 11.0" w.c.	Maximum: 13.0" w.c.

NOTE: If measuring gas pressure at the drip leg, a field-supplied hose barb fitting must be installed prior to making the hose connection. If using the inlet pressure tap on the White-Rodgers 36J54 gas valve, then use the 36G/J Valve Pressure Check Kit, Part No. 0151K00000S.

3. Turn ON the gas supply and operate the furnace and all other gas consuming appliances on the same gas supply line.
4. Measure furnace gas supply pressure with burners firing. Supply pressure must be within the range specified in the *Inlet Gas Supply Pressure* table.

If supply pressure differs from table, make the necessary adjustments to pressure regulator, gas piping size, etc., and/or consult with local gas utility.

5. Turn OFF gas to furnace at the manual shutoff valve and disconnect manometer. Reinstall plug before turning on gas to furnace.
6. Turn OFF any unnecessary gas appliances stated in step 3.

SERVICING

Gas Manifold Pressure Measurement and Adjustment

Only small variations in gas pressure should be made by adjusting the gas valve pressure regulator. The manifold pressure must be measured with the burners operating. To measure and adjust the manifold pressure, use the following procedure.

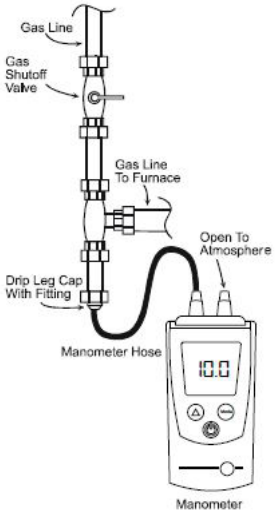

Measuring Inlet Gas Pressure (Alt. Method)

CAUTION

To prevent unreliable operation or equipment damage, the inlet gas supply pressure must be as specified on the unit rating plate with all other household gas fired appliances operating.

1. Turn OFF gas to furnace at the manual gas shutoff valve external to the furnace.
2. Turn off all electrical power to the system.
3. Outlet pressure tap connections:

   White-Rodgers 36J54 valve: Back outlet pressure test screw (inlet/outlet pressure tap) out one turn (counterclockwise, not more than one turn).
4. Attach a hose and manometer to the outlet pressure tap (White-Rodgers valve).
5. Turn ON the gas supply.
6. Turn on power and close thermostat “R” and “W1” contacts to provide a call for low stage heat.
7. Measure the gas manifold pressure with burners firing. Adjust manifold pressure using the *Manifold Gas Pressure* table shown below.
8. Remove regulator cover screw from the low (LO) outlet pressure regulator adjust tower and turn screw clockwise to increase pressure or counterclockwise to decrease pressure. Replace regulator cover screw.
9. Close thermostat “R”, “W1” and “W2” contacts to provide a call for high stage heat.
10. Remove regulator cover screw from the high (HI) outlet pressure regulator adjust tower and turn screw clockwise to increase pressure or counterclockwise to decrease pressure. Replace regulator cover screw.
11. Turn off all electrical power and gas supply to the system.
12. Remove the manometer hose from the hose barb fitting or outlet pressure tap.
13. Replace outlet pressure tap:

    White-Rodgers 36J54 valve: Turn outlet pressure test screw in to seal pressure port (clockwise, 7 in-lb minimum).
14. Turn on electrical power and gas supply to the system.
15. Close thermostat contacts “R” and “W1/W2” to energize the valve.

Manifold Gas Pressure			
Gas		Range	Nominal
Natural	Low Stage	1.6 - 2.2" w.c.	1.9" w.c.
	High Stage	3.2 - 3.8" w.c.	3.5" w.c.
Propane	Low Stage	5.7 - 6.3" w.c.	6.0" w.c.
	High Stage	9.7 - 10.3" w.c.	10.0" w.c.

Using a leak detection solution or soap suds, check for leaks at screw (White-Rodgers valve). Bubbles forming indicate a leak. SHUT OFF GAS AND REPAIR ALL LEAKS IMMEDIATELY!

NOTE: For gas to gas conversion, consult your dealer for appropriate conversion.

CAUTION

To prevent unreliable operation or equipment damage, the inlet gas supply pressure must be as specified on the unit rating plate with all other household gas fired appliances operating.

1. Remove regulator cover screw from the low (LO) outlet pressure regulator adjust tower and turn screw clockwise to increase pressure or counterclockwise to decrease pressure. Replace regulator cover screw.
   a. Close thermostat “R” and “W” contacts to provide a call for heat.
   b. Remove regulator cover screw from the high (HI) outlet pressure regulator adjust tower and turn screw clockwise to increase pressure or counterclockwise to decrease pressure. Replace regulator cover screw.
   c. Turn off all electrical power and gas supply to the system.
   d. Remove the manometer hose from the outlet pressure boss.
   e. Remove the 1/8” NPT hose barb fitting from the outlet pressure tap. Replace the outlet pressure boss plug and seal with a high quality thread sealer.

SERVICING

WARNING

HIGH VOLTAGE
DISCONNECT ALL ELECTRICAL POWER AND SHUT OFF GAS SUPPLY BEFORE SERVICING OR INSTALLING.

2. Turn on gas to furnace and check for leaks. If leaks are found, repair and then reinstall burner compartment door.
3. Turn on electrical power and verify proper unit operation. Make sure furnace operates at the proper manifold pressure at both high and low stage outputs.

Manifold Gas Pressure			
Gas	**Rate**	**Range**	**Nominal**
Natural Gas	High Stage	3.2 to 3.8" w.c.	3.5" w.c.
	Low Stage	1.6 to 2.2" w.c.	1.9" w.c.

WARNING

HIGH VOLTAGE
DISCONNECT ALL POWER BEFORE SERVICING OR INSTALLING THIS UNIT. MULTIPLE POWER SOURCES MAY BE PRESENT. FAILURE TO DO SO MAY CAUSE PROPERTY DAMAGE, PERSONAL INJURY OR DEATH.

WARNING

HIGH VOLTAGE
DISCONNECT ALL ELECTRICAL POWER AND SHUT OFF GAS SUPPLY BEFORE SERVICING OR INSTALLING.

Manifold Gas Pressure			
Gas	**Rate**	**Range**	**Nominal**
Propane Gas	High Stage	9.7 to 10.3" w.c.	10.0" w.c.
	Low Stage	5.7 to 6.3" w.c.	6.0" w.c.

CHECKING HOT SURFACE IGNITOR

120V Silicon Nitride Ignitor - *M/CEC80 use a 120V silicon nitride ignitor for ignition. The normal operating temperature is approximately 2156°F - 2678°F. At room temperature the igniter ohm reading should be from 37-68 ohms.

7. Place unit in heating cycle, measure current draw of ignitor during preheat cycle.

   The steady state current at 120V is 0.37 to 0.68 amps.
8. After checking and/or replacing of hot surface ignitor, reinstall burner compartment door and verify proper unit operation.

CHECKING FOR FLASHBACK

Flashback will also cause burning in the burner venturi, but is caused by the burning speed being greater than the gas-air flow velocity coming from a burner port.

Flashback may occur at the moment of ignition, after a burner heats up or when the burner turns off. The latter is known as extinction pop.

Since the end results of flashback and delayed ignition can be the same (burning in the burner venturi) a definite attempt should be made to determine which has occurred.

If flashback should occur, check for the following:

1. Improper gas pressure - adjust to proper pressure.
2. Check burner for proper alignment and/or replace burner.
3. Improper orifice size - check orifice for obstruction.

CHECKING PRESSURE SWITCH

The pressure control is a safety device to prevent the combustion cycle from occurring with inadequate venting caused by a restricted or blocked vent pipe.

WARNING

HIGH VOLTAGE
DISCONNECT ALL POWER BEFORE SERVICING OR INSTALLING THIS UNIT. MULTIPLE POWER SOURCES MAY BE PRESENT. FAILURE TO DO SO MAY CAUSE PROPERTY DAMAGE, PERSONAL INJURY OR DEATH.

1. Remove burner compartment door to gain access to pressure switch(es).
2. Remove wires from the pressure switch(es) electrical terminals.
3. Remove the pressure control hose from the control and interconnect with an manometer as shown in the following figures.
4. With an ohm meter connected across the pressure switch terminals; with the inducer running the switch should close and the ohm meter should show a complete circuit across the pressure switch. If the switch is not closed, compare the negative pressure to the closing point specified for the particular switch. Either the switch is defective or the inducer / venting system is inadequate.

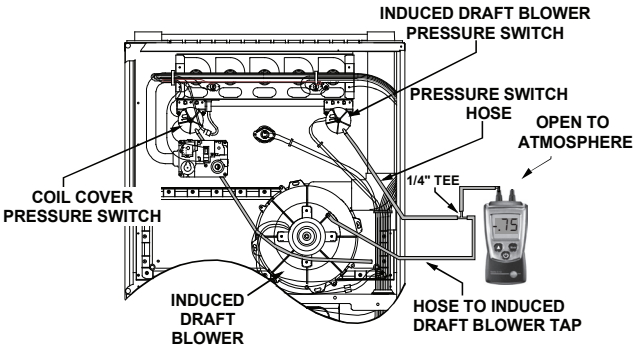

Blower Pressure Switch
Negative Pressure Measurement

SERVICING

CHECKING FOR DELAYED IGNITION

Delayed ignition is a delay in lighting a combustible mixture of gas and air which has accumulated in the combustion chamber.

Furnace design makes this extremely unlikely unless safety controls have been by-passed or tampered with. Never by-pass or alter furnace controls.

If delayed ignition should occur, the following should be checked:

1. Improper gas pressure - adjust to proper pressure.
2. Improper burner positioning - burners should be in locating slots, level front to rear and left to right.
3. Carry over (lighter tube or cross lighter) obstructed - clean.
4. Main burner orifice(s) deformed, or out of alignment to burner - replace.

CHECKING INTEGRATED IGNITION CONTROL BOARDS

NOTE: Failure to earth ground the furnace, reversing the neutral and hot wire connection to the line (polarity), or a high resistance connection in the neutral line may cause the control to lockout due to failure to sense flame.

WARNING

TO AVOID THE RISK OF ELECTRICAL SHOCK, WIRING TO THE UNIT MUST BE PROPERLY POLARIZED AND GROUNDED. DISCONNECT POWER BEFORE PERFORMING SERVICE LISTED BELOW.

The ground wire must run from the furnace all the way back to the electrical panel. Proper grounding can be confirmed by disconnecting the electrical power and measuring resistance between the neutral (white) connection and the burner closest to the flame sensor. Resistance should be less than 2 ohms.

The ignition control is a combination electronic and electromechanical device and is not field repairable. Complete unit must be replaced.

WARNING

LINE VOLTAGE NOW PRESENT

CHECKING FLAME SENSOR

A flame sensing device is used in conjunction with the ignition control module to prove combustion. If proof of flame is not present the control will de-energize the gas valve and “retry” for ignition or lockout.

WARNING

HIGH VOLTAGE

DISCONNECT ALL POWER BEFORE SERVICING OR INSTALLING THIS UNIT. MULTIPLE POWER SOURCES MAY BE PRESENT. FAILURE TO DO SO MAY CAUSE PROPERTY DAMAGE, PERSONAL INJURY OR DEATH.

Flame current can be measured by putting a D.C. microamp meter in series with the flame rod.

WARNING

LINE VOLTAGE NOW PRESENT

3. As soon as flame is established a micro-amp reading should be evident once proof of flame (micro-amp reading) is established, the hot surface ignitor will be de-energized.
4. The Integrated Ignition controls will have 1 to 4 micro-amps. If the micro-amp reading is less than the minimum specified, check for high resistance wiring connections, sensor to burner gap, dirty flame sensor, or poor grounding.
5. If absolutely no reading, check for continuity on all components and if good - replace ignition control module.

NOTE: Contaminated fuel or combustion air can create a nearly invisible coating on the flame sensor. This coating works as an insulator causing a loss in the flame sense signal. If this situation occurs the flame sensor must be cleaned with steel wool.

WARNING

HIGH VOLTAGE

DISCONNECT ALL POWER BEFORE SERVICING OR INSTALLING THIS UNIT. MULTIPLE POWER SOURCES MAY BE PRESENT. FAILURE TO DO SO MAY CAUSE PROPERTY DAMAGE, PERSONAL INJURY OR DEATH.

CAUTION

IF YOU MUST HANDLE THE ITNITOR, HANDLE WITH CARE. TOUCHING THE IGNITOR BODY WITH BARE FINGERS, ROUGH HANDLING, OR VIBRATION COULD RESULT IN EARLY IGNITOR FAILURE. ONLY A QUALIFIED SERVICER SHOULD EVER HANDLE THE IGNITOR.

AIRFLOW TABLES

***M9C80**

COOLING & CIRCULATION AIFLOW										
MODEL	T.STAT CALL	TAP #	EXTERNAL STATIC PRESSURE, (INCHES WATER COLUMN)							
			0.1	0.2	0.3	0.4	0.5	0.6	0.7	0.8
			CFM	CFM	CFM	CFM	CFM	CFM	CFM	CFM
M9C800403A	Y/Y1, Y2 , G	F01	749	697	652	607	554	509	459	406
		F02	1130	1090	1059	1022	991	957	926	895
		F03	584	553	501	447	395	335	N/A	N/A
		F04	882	841	800	760	719	678	641	602
		F05	1158	1113	1090	1057	1024	996	964	935
		F06	925	881	840	800	760	721	681	645
		F07	1270	1235	1208	1179	1147	1119	1088	1060
		F08	1330	1295	1273	1251	1223	1195	1168	1142
		F09	1417	1380	1359	1336	1314	1288	1261	1238
M9C800603A	Y/Y1, Y2 , G	F01	880	837	794	756	717	678	641	602
		F02	1268	1221	1188	1154	1122	1091	1060	1029
		F03	659	599	542	490	437	383	320	N/A
		F04	1026	982	943	906	869	834	799	765
		F05	1308	1262	1224	1197	1167	1141	1117	1089
		F06	1118	1070	1033	997	963	929	896	865
		F07	1087	1044	1008	973	938	905	871	841
		F08	1382	1341	1311	1291	1263	1234	1206	1177
		F09	1492	1448	1409	1381	1354	1332	1310	1288
M9C800603B	Y/Y1, Y2 , G	F01	1125	1089	1052	1013	973	947	909	863
		F02	1413	1386	1360	1330	1302	1270	1242	1211
		F03	720	660	614	542	468	413	359	313
		F04	1146	1113	1076	1039	1002	969	933	891
		F05	1370	1345	1317	1286	1260	1224	1187	1168
		F06	922	872	830	786	736	683	616	565
		F07	1252	1198	1153	1110	1069	1028	990	953
		F08	1289	1260	1232	1194	1161	1125	1087	1073
		F09	1544	1500	1459	1419	1387	1349	1317	1286
M9C800803B	Y/Y1, Y2 , G	F01	1036	985	940	895	848	799	751	705
		F02	1391	1352	1314	1278	1241	1209	1175	1140
		F03	710	646	580	515	432	367	314	274
		F04	1138	1091	1045	1001	959	920	876	832
		F05	1209	1166	1124	1083	1045	1005	964	923
		F06	977	931	880	836	785	734	683	626
		F07	1298	1255	1216	1178	1140	1102	1067	1028
		F08	1456	1414	1376	1341	1302	1270	1238	1200
		F09	1533	1488	1452	1415	1383	1350	1317	1286
M9C800804B	Y/Y1, Y2 , G	F01	1104	1056	1010	968	925	880	831	784
		F02	1395	1347	1309	1270	1233	1199	1164	1125
		F03	841	657	595	522	439	367	N/A	N/A
		F04	1311	1267	1226	1189	1150	1114	1072	1034
		F05	1490	1447	1407	1373	1336	1303	1269	1237
		F06	1553	1510	1469	1435	1401	1368	1335	1300
		F07	1776	1735	1695	1661	1628	1601	1570	1542
		F08	1593	1548	1508	1474	1440	1409	1376	1343
		F09	1853	1812	1773	1739	1708	1679	1650	1623
M9C800804C	Y/Y1, Y2 , G	F01	1214	1158	1103	1045	989	936	883	823
		F02	1518	1465	1418	1372	1328	1284	1237	1195
		F03	831	750	671	588	501	405	348	300
		F04	1303	1249	1191	1136	1081	1028	974	928
		F05	1588	1539	1494	1447	1401	1358	1313	1267
		F06	1426	1375	1324	1277	1229	1177	1124	1078
		F07	1785	1751	1717	1675	1639	1596	1557	1516
		F08	1710	1666	1632	1595	1554	1512	1473	1431
		F09	1845	1805	1771	1733	1695	1655	1618	1576

AIRFLOW TABLES

***M9C80**

COOLING & CIRCULATION AIFLOW										
MODEL	T.STAT CALL	TAP #	EXTERNAL STATIC PRESSURE, (INCHES WATER COLUMN)							
			0.1	0.2	0.3	0.4	0.5	0.6	0.7	0.8
			CFM	CFM	CFM	CFM	CFM	CFM	CFM	CFM
M9C800805C	Y/Y1, Y2 , G	F01	1420	1359	1301	1254	1206	1152	1100	1044
		F02	1825	1769	1718	1673	1629	1584	1540	1497
		F03	826	744	661	573	485	399	339	N/A
		F04	1623	1567	1516	1468	1423	1374	1328	1281
		F05	1697	1644	1596	1551	1505	1457	1413	1367
		F06	1741	1686	1639	1592	1550	1504	1462	1417
		F07	1906	1855	1809	1763	1722	1682	1641	1597
		F08	1966	1914	1869	1825	1782	1745	1703	1660
		F09	2201	2152	2107	2073	2034	1996	1962	1925
M9C800805D	Y/Y1, Y2 , G	F01	1175	1109	1044	977	905	830	750	681
		F02	1828	1778	1731	1687	1643	1597	1556	1512
		F03	972	899	822	741	659	574	503	438
		F04	1401	1338	1290	1234	1179	1126	1073	1014
		F05	1627	1574	1526	1479	1428	1370	1326	1285
		F06	1863	1810	1772	1726	1683	1638	1596	1547
		F07	1920	1873	1835	1795	1751	1704	1673	1633
		F08	2026	1980	1932	1894	1852	1816	1777	1737
		F09	2183	2140	2095	2057	2020	1978	1947	1917
M9C801004C	Y/Y1, Y2 , G	F01	1405	1356	1308	1262	1210	1155	1102	1057
		F02	1846	1807	1762	1731	1685	1646	1615	1574
		F03	802	724	637	551	468	389	342	294
		F04	1260	1207	1156	1103	1037	982	932	878
		F05	1811	1769	1730	1686	1649	1610	1572	1525
		F06	1541	1487	1440	1395	1353	1310	1251	1203
		F07	1587	1545	1494	1451	1409	1367	1316	1266
		F08	1703	1659	1613	1579	1537	1495	1451	1401
		F09	1892	1850	1805	1774	1735	1692	1658	1621
M9C801005C	Y/Y1, Y2 , G	F01	1589	1539	1498	1459	1417	1377	1334	1293
		F02	2153	2119	2073	2044	2003	1971	1939	1907
		F03	1034	745	642	550	462	374	329	287
		F04	1579	1525	1483	1443	1400	1358	1313	1260
		F05	1891	1843	1804	1767	1730	1698	1660	1626
		F06	1824	1784	1739	1700	1667	1624	1592	1555
		F07	1731	1677	1637	1600	1556	1518	1474	1439
		F08	1944	1901	1864	1823	1786	1748	1719	1680
		F09	2219	2175	2134	2106	2071	2039	2008	1982
M9C801205D	Y/Y1, Y2 , G	F01	1355	1301	1249	1196	1142	1078	1023	970
		F02	1806	1764	1729	1688	1654	1615	1578	1535
		F03	851	774	692	615	535	470	411	359
		F04	1154	1098	1043	983	932	874	819	755
		F05	1712	1660	1614	1580	1540	1501	1461	1417
		F06	1617	1568	1525	1481	1439	1402	1354	1309
		F07	1869	1816	1773	1731	1693	1661	1629	1589
		F08	1947	1903	1865	1833	1802	1769	1743	1708
		F09	2107	2066	2030	1996	1963	1932	1899	1867

NOTE:

Y/Y1 default speed is F04
Y2 default speed is F05
G default speed is F01

RECOMMENDED AIRFLOW SPEEDS FOR CONNECTION WITH 2 STAGE OUTDOOR MODELS		
FURNACE MODEL	Y2	Y1
M9C800805D	F02	F01
M9C801205D	F08	F01

NOTE: For a single-stage outdoor unit, the Y connection from the thermostat can be connected to the Y/Y1 Y1 or Y2 connection on the furnace control module. A call for cooling will energize that connection on the furnace control module. The desired cooling fan speed should be adjusted for the furnace control module connection used (Y1 or Y2) to provide the correct cooling airflow.

AIRFLOW TABLES

***M9C80**

MODEL	T.STAT CALL	TAP #	HEATING AIFLOW													TEMP RANGE
			EXTERNAL STATIC PRESSURE, (INCHES WATER COLUMN)													
			0.1		0.2		0.3		0.4		0.5		0.6	0.7	0.8	
			CFM	RISE	CFM	RISE	CFM	RISE	CFM	RISE	CFM	RISE	CFM	CFM	CFM	
M9C800403A	W/W1	F01^	749	28	697	30	652	32	607	34	554	37	509	459	406	15 - 45
		F03^^	584	N/A	553	N/A	501	N/A	447	N/A	395	N/A	335	N/A	N/A	
		F04	882	24	841	25	800	26	760	27	719	29	678	641	602	
	W2	F02^	1130	26	1090	27	1059	28	1022	29	991	30	957	926	895	
		F04	882	34	841	35	800	37	760	39	719	41	678	641	602	
		F05	1158	26	1113	27	1090	27	1057	28	1024	29	996	964	935	
M9C800603A	W/W1	F01^	880	35	837	37	794	39	756	41	717	43	678	641	602	20 - 50
		F03^^	659	N/A	599	N/A	542	N/A	490	N/A	437	N/A	383	320	N/A	
		F04	1026	30	982	32	943	33	906	34	869	36	834	799	765	
	W2	F02^	1268	35	1221	36	1188	37	1154	38	1122	40	1091	1060	1029	
		F04^^	1026	N/A	982	N/A	943	N/A	906	N/A	869	N/A	834	799	765	
		F05	1308	34	1262	35	1224	36	1197	37	1167	38	1141	1117	1089	
M9C800603B	W/W1	F01^	1125	28	1089	29	1052	30	1013	31	973	32	947	909	863	15 - 45
		F03^^	720	N/A	660	N/A	614	N/A	542	N/A	468	N/A	413	359	313	
		F04	1146	27	1113	28	1076	29	1039	30	1002	31	969	933	891	
	W2	F02^	1413	31	1386	32	1360	33	1330	33	1302	34	1270	1242	1211	
		F04	1146	39	1113	40	1076	41	1039	43	1002	44	969	933	891	
		F05	1370	32	1345	33	1317	34	1286	35	1260	35	1224	1187	1168	
M9C800803B	W/W1	F01^	1036	40	985	42	940	44	895	46	848	49	799	751	705	30 - 60
		F03^^	710	N/A	646	N/A	580	N/A	515	N/A	432	N/A	367	314	274	
		F04	1138	36	1091	38	1045	40	1001	41	959	43	920	876	832	
	W2	F02^	1391	43	1352	44	1314	45	1278	46	1241	48	1209	1175	1140	
		F04^^	1138	N/A	1091	N/A	1045	N/A	1001	N/A	959	N/A	920	876	832	
		F05	1209	49	1166	51	1124	53	1083	55	1045	57	1005	964	923	
M9C800804B	W/W1	F01^	1104	38	1056	39	1010	41	968	43	925	45	880	831	784	30 - 60
		F03^^	841	N/A	657	N/A	595	N/A	522	N/A	439	N/A	367	315	N/A	
		F04	1311	32	1267	33	1226	34	1189	35	1150	36	1114	1072	1034	
	W2	F02^	1395	42	1347	44	1309	45	1270	47	1233	48	1199	1164	1125	
		F04	1311	45	1267	47	1226	48	1189	50	1150	52	1114	1072	1034	
		F05	1490	40	1447	41	1407	42	1373	43	1336	44	1303	1269	1237	
M9C800804C	W/W1	F01^	1214	34	1158	36	1103	38	1045	40	989	42	936	883	823	25 - 55
		F03^^	831	N/A	750	N/A	671	N/A	588	N/A	501	N/A	405	348	300	
		F04	1303	32	1249	33	1191	35	1136	37	1081	38	1028	974	928	
	W2	F02^	1518	39	1465	40	1418	42	1372	43	1328	45	1284	1237	1195	
		F04	1303	45	1249	47	1191	50	1136	52	1081	55	1028	974	928	
		F05	1588	37	1539	39	1494	40	1447	41	1401	42	1358	1313	1267	
M9C800805C	W/W1	F01^	1420	29	1359	31	1301	32	1254	33	1206	34	1152	1100	1044	25 - 55
		F03^^	826	N/A	744	N/A	661	N/A	573	N/A	485	N/A	399	339	N/A	
		F04^^	1623	N/A	1567	N/A	1516	N/A	1468	N/A	1423	N/A	1374	1328	1281	
	W2	F02^	1825	32	1769	33	1718	34	1673	35	1629	36	1584	1540	1497	
		F04	1623	37	1567	38	1516	39	1468	40	1423	42	1374	1328	1281	
		F05	1697	35	1644	36	1596	37	1551	38	1505	39	1457	1413	1367	
M9C800805D	W/W1	F01^	1175	35	1109	37	1044	40	977	42	905	46	830	750	681	20 - 50
		F03^^	972	N/A	899	N/A	822	N/A	741	N/A	659	N/A	574	503	438	
		F04	1401	30	1338	31	1290	32	1234	34	1179	35	1126	1073	1014	
	W2	F02^	1828	32	1778	33	1731	34	1687	35	1643	36	1597	1556	1512	
		F04	1401	42	1338	44	1290	46	1234	48	1179	50	1126	1073	1014	
		F05	1627	36	1574	38	1526	39	1479	40	1428	41	1370	1326	1285	
M9C801004C	W/W1	F01^	1405	37	1356	38	1308	40	1262	41	1210	43	1155	1102	1057	25 - 55
		F03^^	802	N/A	724	N/A	637	N/A	551	N/A	468	N/A	389	342	294	
		F04	1260	41	1207	43	1156	45	1103	47	1037	50	982	932	878	
	W2	F02^	1846	40	1807	41	1762	42	1731	43	1685	44	1646	1615	1574	
		F04^^	1260	N/A	1207	N/A	1156	N/A	1103	N/A	1037	N/A	982	932	878	
		F05	1811	41	1769	42	1730	43	1686	44	1649	45	1610	1572	1525	
M9C801005C	W/W1	F01^	1589	33	1539	34	1498	35	1459	36	1417	37	1377	1334	1293	25 - 55
		F03^^	1034	N/A	745	N/A	642	N/A	550	N/A	462	N/A	374	329	287	
		F04	1579	33	1525	34	1483	35	1443	36	1400	37	1358	1313	1260	
	W2	F02^	2153	34	2119	35	2073	36	2044	36	2003	37	1971	1939	1907	
		F04	1579	47	1525	49	1483	50	1443	51	1400	53	1358	1313	1260	
		F05	1891	39	1843	40	1804	41	1767	42	1730	43	1698	1660	1626	
M9C801205D	W/W1	F01^	1355	46	1301	48	1249	50	1196	52	1142	54	1078	1023	970	40 - 70
		F03^^	851	N/A	774	N/A	692	N/A	615	N/A	535	N/A	470	411	359	
		F04	1154	54	1098	57	1043	60	983	63	932	67	874	819	755	
	W2	F02^	1806	49	1764	50	1729	51	1688	53	1654	54	1615	1578	1535	
		F04^^	1154	N/A	1098	N/A	1043	N/A	983	N/A	932	N/A	874	819	755	
		F05	1712	52	1660	54	1614	55	1580	56	1540	58	1501	1461	1417	

NOTE:
^DEFAULT & RECOMMENDED
^^NOT RECOMMENDED FOR HEATING

AIRFLOW TABLES

***C9C80**

COOLING & CIRCULATION AIFLOW										
MODEL	THERMOSTAT CALL	TAP #	EXTERNAL STATIC PRESSURE, (INCHES WATER COLUMN)							
			0.1	0.2	0.3	0.4	0.5	0.6	0.7	0.8
			CFM	CFM	CFM	CFM	CFM	CFM	CFM	CFM
C9C800403A	Y/Y1 , Y2 , G	F01	712	663	610	559	514	462	395	337
		F02	1120	1081	1053	1022	990	955	918	887
		F03	619	568	510	459	404	325	269	216
		F04	825	784	741	694	650	609	563	520
		F05	1000	963	930	893	852	816	776	745
		F06	889	844	799	758	721	684	646	601
		F07	1212	1198	1161	1138	1103	1076	1037	1007
		F08	1362	1342	1307	1273	1252	1237	1211	1185
		F09	1426	1405	1380	1359	1335	1312	1280	1254
C9C800603A	Y/Y1 , Y2 , G	F01	706	655	604	555	505	455	395	328
		F02	1035	991	951	913	876	844	807	770
		F03	630	572	521	466	411	341	269	216
		F04	897	851	808	764	725	686	646	603
		F05	1155	1113	1074	1039	1006	974	945	913
		F06	1123	1077	1041	1006	973	941	907	875
		F07	1255	1214	1181	1147	1116	1087	1056	1028
		F08	1388	1331	1298	1266	1235	1207	1179	1151
		F09	1421	1380	1348	1318	1289	1262	1233	1207
C9C800603B	Y/Y1 , Y2 , G	F01	868	811	752	692	631	510	452	399
		F02	1157	1105	1058	1014	968	924	877	827
		F03	738	672	598	510	413	360	309	N/A
		F04	967	912	861	809	755	693	609	565
		F05	1207	1158	1112	1065	1021	978	934	886
		F06	1215	1182	1146	1111	1078	1041	1007	975
		F07	1325	1294	1254	1213	1176	1137	1097	1054
		F08	1352	1324	1293	1264	1229	1199	1170	1138
		F09	1464	1430	1394	1358	1322	1302	1267	1232
C9C800804B	Y/Y1 , Y2 , G	F01	1011	958	912	866	815	763	710	642
		F02	1393	1348	1308	1270	1230	1196	1158	1123
		F03	760	697	636	569	481	402	349	300
		F04	1309	1261	1218	1182	1142	1103	1064	1025
		F05	1459	1414	1371	1336	1297	1264	1229	1193
		F06	1580	1534	1495	1459	1429	1390	1356	1324
		F07	1753	1713	1677	1642	1611	1576	1549	1518
		F08	1523	1483	1438	1403	1370	1336	1299	1266
		F09	1643	1599	1562	1525	1491	1462	1431	1394
C9C800805C	Y/Y1 , Y2 , G	F01	1176	1105	1020	935	864	797	729	673
		F02	1513	1459	1400	1335	1253	1182	1122	1067
		F03	1022	813	674	585	511	431	334	282
		F04	1640	1595	1540	1489	1436	1367	1307	1254
		F05	1843	1786	1747	1690	1643	1575	1497	1435
		F06	1859	1819	1779	1734	1691	1641	1593	1520
		F07	2028	1982	1946	1907	1861	1814	1749	1683
		F08	2096	2045	2006	1974	1927	1882	1818	1765
		F09	2203	2170	2138	2113	2074	2032	1990	1948
C9C801005C	Y/Y1 , Y2 , G	F01	1628	1571	1521	1472	1425	1380	1337	1291
		F02	2159	2116	2072	2032	1992	1953	1916	1882
		F03	956	777	675	587	468	377	324	296
		F04	1561	1499	1441	1385	1336	1289	1243	1197
		F05	2222	2174	2132	2090	2053	2013	1976	1944
		F06	1833	1784	1735	1688	1645	1605	1562	1520
		F07	1714	1659	1611	1564	1519	1473	1432	1387
		F08	1926	1894	1849	1807	1764	1720	1683	1642
		F09	1899	1853	1804	1761	1720	1681	1640	1602

NOTE:

Y/Y1 default speed is F04
Y2 default speed is F05
G default speed is F01

RECOMMENDED AIRFLOW SPEEDS FOR CONNECTION WITH 2 STAGE OUTDOOR MODELS		
FURNACE MODEL	Y2	Y1
C9C800805C	F05	F01

NOTE: For a single-stage outdoor unit, the Y connection from the thermostat can be connected to the Y/Y1 Y1 or Y2 connection on the furnace control module. A call for cooling will energize that connection on the furnace control module. The desired cooling fan speed should be adjusted for the furnace control module connection used (Y1 or Y2) to provide the correct cooling airflow.

AIRFLOW TABLES

*C9C80

HEATING AIFLOW

MODEL	T.STAT CALL	TAP #	EXTERNAL STATIC PRESSURE, (INCHES WATER COLUMN)													TEMP RANGE
			0.1		0.2		0.3		0.4		0.5		0.6	0.7	0.8	
			CFM	RISE	CFM	RISE	CFM	RISE	CFM	RISE	CFM	RISE	CFM	CFM	CFM	
C9C800403A	W/W1	F01^	712	29	663	31	610	34	559	37	514	40	514	395	337	15 - 45
		F03^^	619	N/A	568	N/A	510	N/A	459	N/A	404	N/A	325	269	216	
		F04	825	25	784	26	741	28	694	30	650	32	609	563	520	
	W2	F02^	1120	26	1081	27	1053	28	1022	29	990	30	955	918	887	
		F04	825	36	784	38	741	40	694	43	650	45	609	563	520	
		F05	1000	30	963	31	930	32	893	33	852	35	816	776	745	
C9C800603A	W/W1	F01^	706	44	655	48	604	52	555	56	505	N/A	455	395	328	25-55
		F03^^	630	N/A	572	N/A	521	N/A	466	N/A	411	N/A	341	269	216	
		F04	897	35	851	37	808	39	764	41	725	43	686	646	603	
	W2	F02^	1035	43	991	45	951	47	913	49	876	51	844	807	770	
		F04^^	897	N/A	851	N/A	808	N/A	764	N/A	725	N/A	686	646	603	
		F05	1155	38	1113	40	1074	41	1039	43	1006	44	974	945	913	
C9C800603B	W/W1	F01^	868	36	811	38	752	41	692	45	631	49	510	452	399	25-55
		F03^^	738	N/A	672	N/A	598	N/A	510	N/A	413	N/A	360	309	N/A	
		F04	967	32	912	34	861	36	809	38	755	41	693	609	565	
	W2	F02^	1157	38	1105	40	1058	42	1014	44	968	46	924	877	827	
		F04^^	967	N/A	912	N/A	861	N/A	809	N/A	755	N/A	693	609	565	
		F05	1207	37	1158	38	1112	40	1065	42	1021	44	978	934	886	
C9C800804B	W/W1	F01^	1011	41	958	43	912	46	866	48	815	51	763	710	642	30 - 60
		F03^^	760	N/A	697	N/A	636	N/A	569	N/A	481	N/A	402	349	300	
		F04	1309	32	1261	33	1218	34	1182	35	1142	36	1103	1064	1025	
	W2	F02^	1393	43	1348	44	1308	45	1270	47	1230	48	1196	1158	1123	
		F04	1309	45	1261	47	1218	49	1182	50	1142	52	1103	1064	1025	
		F05	1459	41	1414	42	1371	43	1336	44	1297	46	1264	1229	1193	
C9C800805C	W/W1	F01^	1176	35	1105	38	1020	41	935	44	864	48	797	729	673	30 - 60
		F03^^	1022	N/A	813	N/A	674	N/A	585	N/A	511	N/A	431	334	282	
		F04^^	1640	N/A	1595	N/A	1540	N/A	1489	N/A	1436	N/A	1367	1307	1254	
	W2	F02	1513	39	1459	41	1400	42	1335	44	1253	47	1182	1122	1067	
		F04	1640	36	1595	37	1540	38	1489	40	1436	41	1367	1307	1254	
		F05	1843	32	1786	33	1747	34	1690	35	1643	36	1575	1497	1435	
C9C801005C	W/W1	F01^	1628	32	1571	33	1521	34	1472	35	1425	36	1380	1337	1291	20 - 50
		F03^^	956	N/A	777	N/A	675	N/A	587	N/A	468	N/A	377	324	296	
		F04	1561	33	1499	35	1441	36	1385	37	1336	39	1289	1243	1197	
	W2	F02^	2159	34	2116	35	2072	36	2032	36	1992	37	1953	1916	1882	
		F04^^	1561	N/A	1499	N/A	1441	N/A	1385	N/A	1336	N/A	1289	1243	1197	
		F05	2222	33	2174	34	2132	35	2090	35	2053	36	2013	1976	1944	

NOTE:

^DEFAULT & RECOMMENDED

^^NOT RECOMMENDED FOR HEATING

TROUBLESHOOTING

2 Stage Troubleshooting Codes

Symptom	LED Status	Fault Description	Possible Causes	Corrective Action(s)	Notes & Cautions
Normal operation.	IdL	Idle	• Normal operation.	• None	• Normal operation.
Furnace fails to operate. Integrated control module LED display provides no signal.	nonE	No 115v power to furnace or no 24 volt power to integrated control module. Blown fuse or tripped circuit breaker. Integrated control module is non-functional.	• Manual disconnect switch turned OFF, door switch open or 24 volt wire improperly connected or loose. • Furnace electrical supply shared with other devices. • Integrated control module is non-functional.	• Check 115 volt power to furnace and integrated control module. • Check for possible shorts in 115 volt circuit. Repair as necessary. • Replace non-functional integrated control module.	• Turn power OFF prior to repair. • Read precautions in "Electrostatic Discharge" section of manual. • Replace control with correct replacement part.
Furnace fails to operate and goes into a hard lockout.	EbL	Circulator blower motor current after heat ON delay is lower than expected value.	• Loose wiring connections to and from the blower motor. • Circulator blower motor 115 volt L1 wire is not plugged into the CIRC-H connection on the integrated control board. • Circulator blower motor failure.	• Check for loose wiring connections to and from the circulator blower motor. • Check 115 volt L1 wire from blower motor is plugged into the CIRC-H connection on the integrated control board. • Check circulator blower motor operation. Replace blower motor if necessary.	• Turn power OFF prior to repair. • Replace blower motor with correct replacement part.
Furnace fails to operate and goes into a hard lockout.	EbU	Circulator blower motor current during inducer pre-purge is higher than expected value.	• Circulator blower motor power wiring reversed on integrated control board.	• Check for loose wiring connections to and from the circulator blower motor. • Check for miswired connections on the integrated control board.	• Turn power OFF prior to repair.
Furnace fails to operate.	EE0	Furnace lockout due to excessive number of ignition "retries" (3 total). Failure to establish flame. Loss of flame after establishment.	• Failure to establish flame. Cause may be no gas to burners, front cover pressure switch stuck open, bad igniter or igniter alignment, improper orifices, or coated/oxidized or improperly connected flame sensor. • Loss of flame after establshment. Cause may be interrupted gas supply, lazy burner flames (improper gas pressure or restriction in flue and/or lack of combustion air), or improper induced draft blower performance.	• Locate and correct gas interruption. • Replace or realign igniter. • Check flame sense signal. Clean sensor if coated and/or oxidized. • Check flue piping for blockage, proper length, elbows and termination. • Verify proper induced draft blower performance.	• Turn power OFF prior to repair. • Igniter is fragile, handle with care. • Clean flame sensor with steel wool. • See "Vent/Flue Pipe" section for piping details.
Furnace fails to operate.	EE1	Low-stage pressure switch circuit closed at start of heating cycle.	• Low stage pressure switch contacts sticking. • Short in pressure switch circuit wiring.	• Replace low stage pressure switch. • Repair short in wiring.	• Turn power OFF prior to repair. • Replace pressure switch with proper replacement part.
Induced draft blower runs continuously with no further furnace operation.	EE2	Low-stage pressure switch circuit open.	• Pressure switch hose blocked, pinched, or connected improperly. • Blocked flue pipe, or weak induced draft blower. • Incorrect pressure switch set point or malfunctioning switch contacts. • Loose or improperly connected wiring.	• Inspect pressure switch hose. Repair/replace if necessary. • Inspect flue piping for blockage, proper length, elbows and termination. Correct as necessary. • Check induced draft blower performance. Correct as necessary. • Check pressure switch operation. Replace as needed. • Tighten or correct wiring connections.	• Turn power OFF prior to repair. • Replace pressure switch with proper replacement part. • Replace induced draft blower with proper replacement part.
Circulator blower runs continuously with no furnace operation.	EE3	Primary limit circuit open.	• Insufficient conditioned air over the heat exchanger. • Blocked filters, restrictive ductwork. • Inproper circulator blower speed or failed circulator blower motor. • Loose or improperly connected wiring in high limit circuit.	• Check filters and ductwork for blockage. Clean filters or remove obstruction. • Check circulator blower speed and performance. Correct speed or replace blower motor if necessary. • Tighten or correct wiring connections.	• Turn power OFF prior to repair. • See Specification Sheet applicable for your model for allowable temp rise range and proper circulator speed.
Induced draft blower and circulator blower run continuously with no furnace operation.	EE4	Flame sensed with no call for heat.	• Short to ground in flame sense circuit. • Lingering burner flame. • Slow closing gas valve.	• Correct short at flame sensor or in flame sensor wiring. • Check for lingering flame. • Verify proper operation of gas valve.	• Turn power OFF prior to repair.
No furnace operation.	EE5	Open fuse.	• Short in low voltage wiring	• Locate and correct short in low voltage wiring.	• Turn power OFF prior to repair. • Replace fuse with 3-amp automotive type.
Normal furnace operation with weak flame signal.	EE6	Flame sense micro amp signal is low.	• Flame sensor is coated/oxidized. • Flame sensor incorrectly positioned in burner flame. • Lazy burner flame due to improper gas pressure or combution air.	• Clean flame sensor if coated or oxidized. • Inspect flame sensor for proper alignment. • Compare current gas pressure to rating plate and adjust as needed.	• Turn power OFF prior to repair. • Clean flame sensor with steel wool. • See "Vent/Flue Pipe" section for piping details. • See rating plate for proper gas pressure.
Furnace fails to operate.	EE7	Problem with igniter circuit.	• Improperly connected igniter. • Shorted igniter. • Poor furnace ground. • Igniter relay fault on integrated control module.	• Check and correct wiring from integrated control module to igniter. • Replace shorted igniter. • Check and correct furnace ground wiring. • Check igniter output from control. Replace if necessary.	• Turn power OFF prior to repair. • Replace ingiter with correct replacement part. • Replace control with correct replacement part.

TROUBLESHOOTING

2 Stage Troubleshooting Codes

Symptom	LED Status	Fault Description	Possible Causes	Corrective Action(s)	Notes & Cautions
Furnace fails to operate on high stage. Furnace operates normally on low stage.	EE8	High-stage pressure switch circuit closed at start of heating cycle.	• High stage pressure switch contacts sticking. • Short in pressure switch circuit wiring.	• Replace high stage pressure switch. • Repair short in wiring.	• Turn power OFF prior to repair. • Replace pressure switch with proper replacement part.
Furnace fails to operate on high stage. Furnace operates normally on low stage.	EE9	High-stage pressure switch circuit open.	• Pressure switch hose blocked, pinched, or connected improperly. • Blocked flue pipe, or weak induced draft blower. • Incorrect pressure switch set point or malfunctioning switch contacts. • Loose or improperly connected wiring.	• Inspect pressure switch hose. Repair/replace if necessary. • Inspect flue piping for blockage, proper length, elbows and termination. Correct as necessary. • Check induced draft blower performance. Correct as necessary. • Correct pressure switch set point or contact motion. • Tighten or correct wiring connections.	• Turn power OFF prior to repair. • Replace pressure switch with proper replacement part. • Replace induced draft blower with proper replacement part.
Furnace fails to operate.	E10	Grounding fault	• Poor neutral connection.	• Verify neutral wire connection to furnace and continuity to ground source.	• Turn power OFF prior to repair.
Furnace fails to operate.	E11	Open rollout switch.	• Gas pressure too high. • Burners mis-aligned. • Restricted heat exchanger or venting.	• Check and correct gas pressure. • Check and correct burner alignment. • Check and correct restriction	• Turn power OFF prior to repair.
Furnace fails to operate.	EEA	Polarity if 115 volt AC is reversed.	• Polarity of 115 volt AC power to furnace or integrated control module is reversed. • Poor furnace ground.	• Review wiring diagram to correct polarity. • Verify proper ground. Correct if necessary. • Check and correct wiring.	• Turn power OFF prior to repair.
Furnace fails to operate.	EEb	Gas valve is not energized when it should be. External gas valve error.	• Miswired gas valve circuit. • Open gas valve circuit. • Gas valve relay on integrated control board stuck open.	• Check wiring in gas valve circuit. • Replace integrated control board.	• Turn power OFF prior to repair.
Furnace fails to operate.	EEC	Gas valve is energized when it should not be. Internal gas valve error.	• Miswired gas valve circuit. • Shorted gas valve wiring. • Gas valve relay on integrated control board stuck open.	• Check wiring in gas valve circuit. • Replace integrated control board.	• Turn power OFF prior to repair.
Furnace fails to operate.	EEE	Internal Faults or IRQ Loss in integrated control board.		• Replace integrated control board.	• Turn power OFF prior to repair.
Twinning feature not working.	EEH	TWIN error.	• Both furnaces not on the same 115 volt power from breaker. • Low voltage wiring error or loose wiring connections.	• Verify 115 volt power to each furnace. • Check wiring connections. • Replace integrated control board if necessary.	• Turn power OFF prior to repair.
Furnace fails to operate.	EEJ	Inducer relay error.		• Replace integrated control board	• Turn power OFF prior to repair. • Replace the integrated control board with proper replacement part.
Furnace fails to operate.	EEL	Problem with igniter circuit.	• Improperly connected igniter. • Shorted igniter. • Poor furnace ground. • Igniter relay fault on integrated control module.	• Check and correct wiring from integrated control board to igniter. • Replace shorted igniter. • Check and correct furnace ground wiring. • Check igniter output from control. Replace if necessary.	• Turn power OFF prior to repair. • Replace igniter with correct replacement part. • Replace control with correct replacement part.
Furnace fails to operate.	EEn	Igniter open.	• Loose or incorrect wiring from integrated control board to igniter. • Damaged igniter.	• Check and correct wiring from integrated control board to igniter. • Replace igniter if necessary.	• Turn power OFF prior to repair. • Replace igniter with correct replacement part.

To View & Clear Fault Codes

- Press either the Left or Right switch until L 6 F is displayed.
- Press the center switch to view stored faults.
- Press and hold the center switch for 5 to 30 seconds.
- All stored faults will be erased, and the display will flash - - - three times and return to L 6 F.

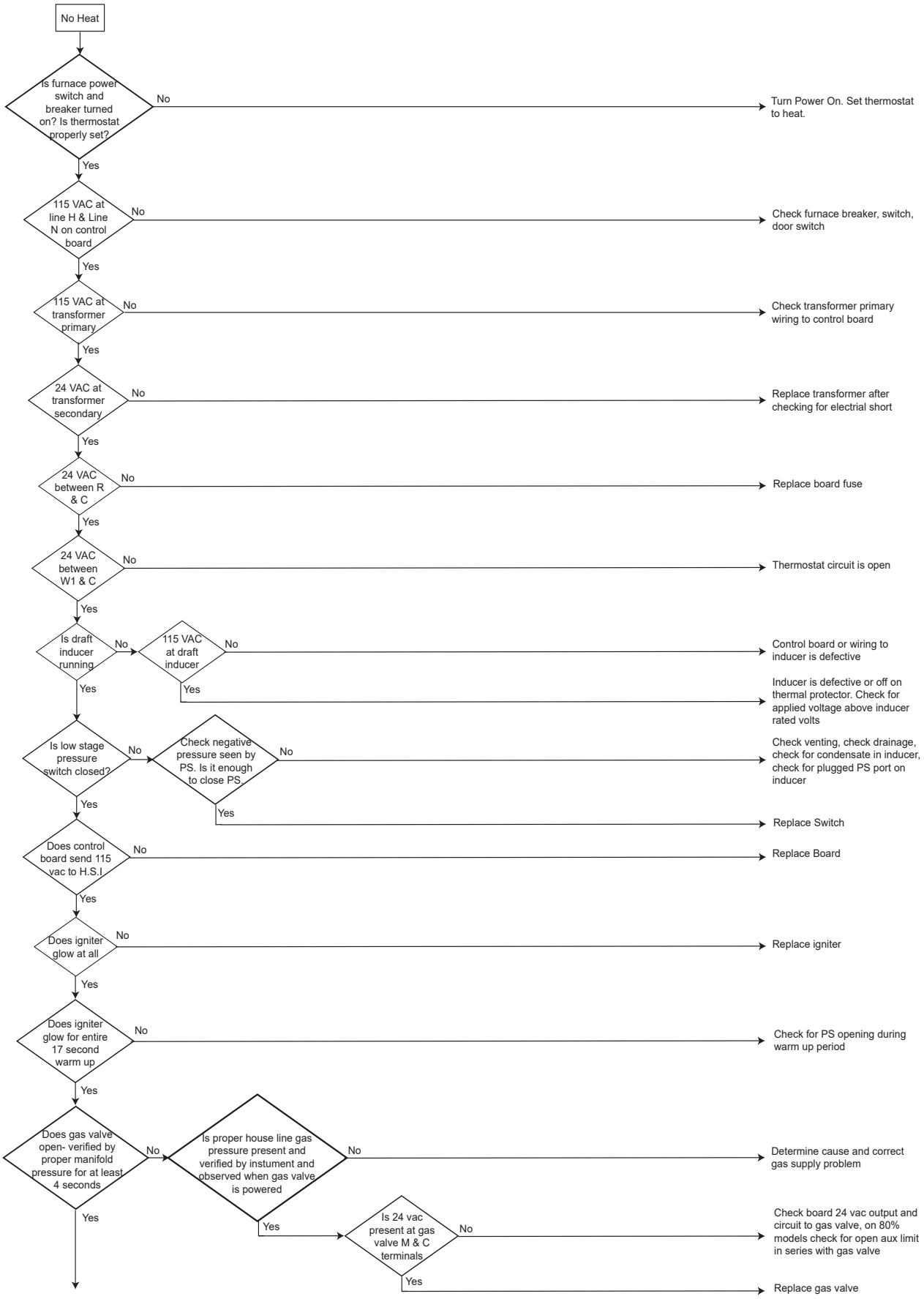
No Heat
Is furnace power switch and breaker turned on? Is thermostat properly set?
No
Turn Power On. Set thermostat to heat.
Yes
115 VAC at line H & Line N on control board
No
Check furnace breaker, switch, door switch
Yes
115 VAC at transformer primary
No
Check transformer primary wiring to control board
Yes
24 VAC at transformer secondary
No
Replace transformer after checking for electrial short
Yes
24 VAC between R & C
No
Replace board fuse
Yes
24 VAC between W1 & C
No
Thermostat circuit is open
Yes
Is draft inducer running
No
115 VAC at draft inducer
No
Control board or wiring to inducer is defective
Yes
Inducer is defective or off on thermal protector. Check for applied voltage above inducer rated volts
Yes
Is low stage pressure switch closed?
No
Check negative pressure seen by PS. Is it enough to close PS.
No
Check venting, check drainage, check for condensate in inducer, check for plugged PS port on inducer
Yes
Replace Switch
Yes
Does control board send 115 vac to H.S.I
No
Replace Board
Yes
Does igniter glow at all
No
Replace igniter
Yes
Does igniter glow for entire 17 second warm up
No
Check for PS opening during warm up period
Yes
Does gas valve open- verified by proper manifold pressure for at least 4 seconds
No
Is proper house line gas pressure present and verified by instument and observed when gas valve is powered
No
Determine cause and correct gas supply problem
Yes
Yes
Is 24 vac present at gas valve M & C terminals
No
Check board 24 vac output and circuit to gas valve, on 80% models check for open aux limit in series with gas valve
Yes
Replace gas valve

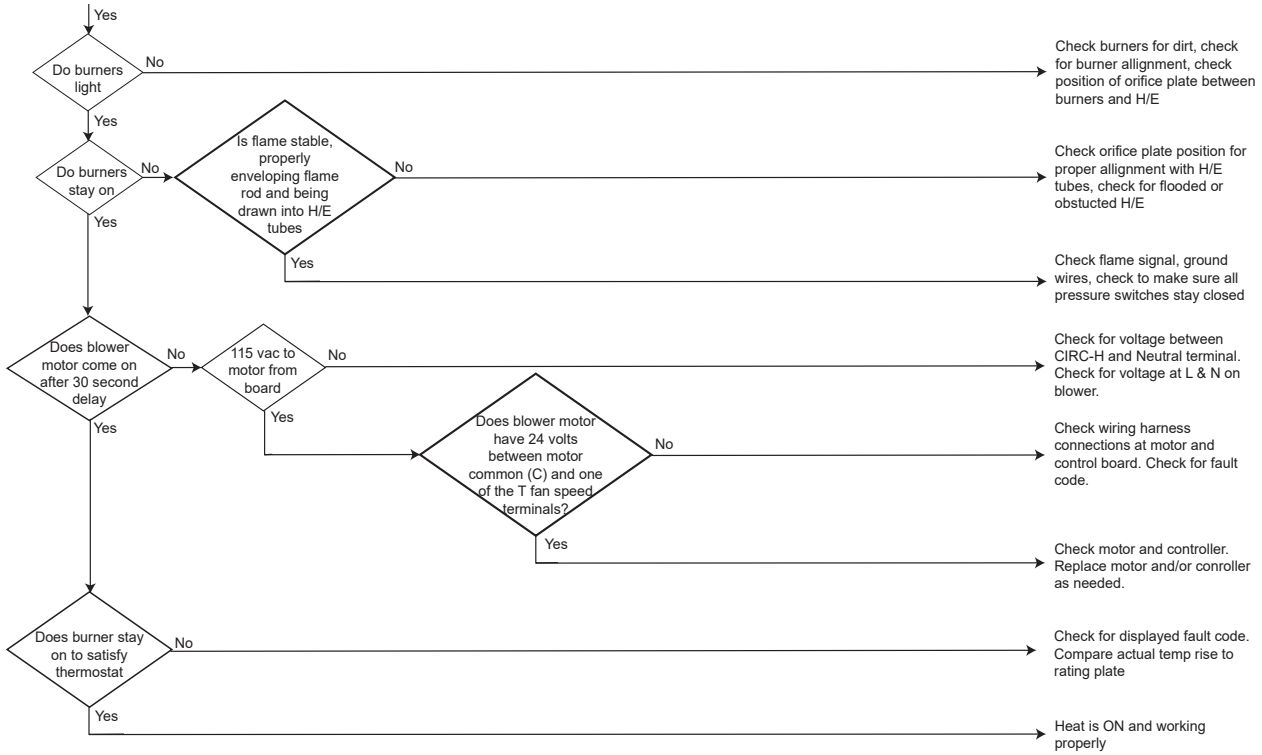
Yes
Do burners light
No
Check burners for dirt, check for burner allignment, check position of orifice plate between burners and H/E
Yes
Do burners stay on
No
Is flame stable, properly enveloping flame rod and being drawn into H/E tubes
No
Check orifice plate position for proper allignment with H/E tubes, check for flooded or obstucted H/E
Yes
Check flame signal, ground wires, check to make sure all pressure switches stay closed
Yes
Does blower motor come on after 30 second delay
No
115 vac to motor from board
No
Check for voltage between CIRC-H and Neutral terminal. Check for voltage at L & N on blower.
Yes
Does blower motor have 24 volts between motor common (C) and one of the T fan speed terminals?
No
Check wiring harness connections at motor and control board. Check for fault code.
Yes
Check motor and controller. Replace motor and/or conroller as needed.
Does burner stay on to satisfy thermostat
No
Check for displayed fault code. Compare actual temp rise to rating plate
Yes
Heat is ON and working properly

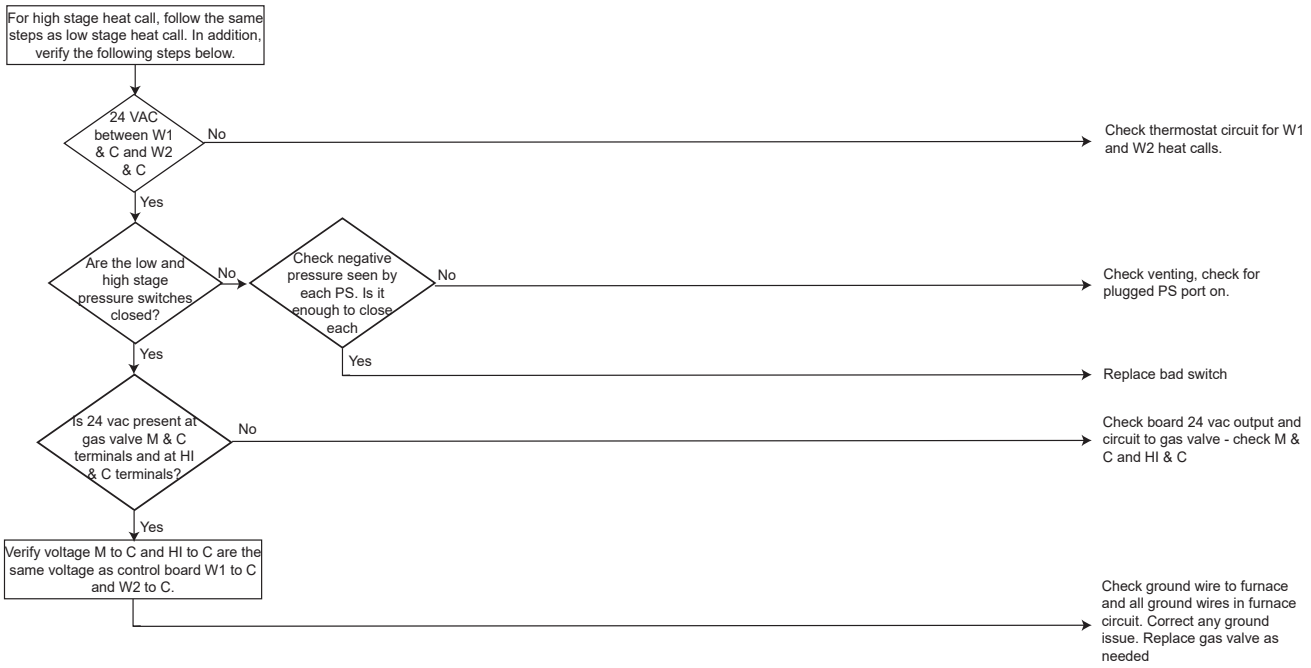
For high stage heat call, follow the same steps as low stage heat call. In addition, verify the following steps below.
24 VAC between W1 & C and W2 & C
No
Check thermostat circuit for W1 and W2 heat calls.
Yes
Are the low and high stage pressure switches closed?
No
Check negative pressure seen by each PS. Is it enough to close each
No
Check venting, check for plugged PS port on.
Yes
Replace bad switch
Yes
Is 24 vac present at gas valve M & C terminals and at HI & C terminals?
No
Check board 24 vac output and circuit to gas valve - check M & C and HI & C
Yes
Verify voltage M to C and HI to C are the same voltage as control board W1 to C and W2 to C.
Check ground wire to furnace and all ground wires in furnace circuit. Correct any ground issue. Replace gas valve as needed

Error Code:
E0 - Lockout due to an excessive number of ignition retries (3 total)

Applicable Models:
All 80% models

Method of Error Detection:
Furnace fails to ignite after 3 retires

Error Decision Conditions:
No gas or low gas pressure at manifold. Bad hot surface ignitor - not glowing, dirty flame sensor

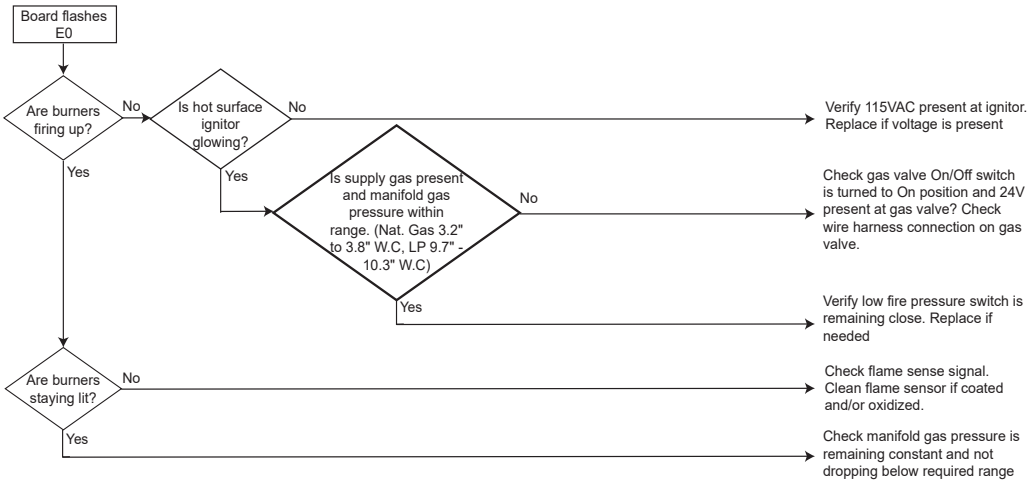

Error Code:
E1 - Low pressure switch circuit closed at the start of heating cycle.

E2 - Low pressure switch circuit is not closed.

E8 - High pressure switch circuit closed at the start of heating cycle. Furnace is operating on low stage only.

E9 - High pressure switch circuit is not closed. Furnace is operating on low stage only.

Applicable Models:
For Goodman/Amana
AM9C, GM9C

For Daikin
DM**TN

Method of Error Detection:
Pressure Switch during heating operation.

Error Decision Conditions:
Pressure switch circuit closed when it should be open.
Pressure switch circuit open when it should be closed

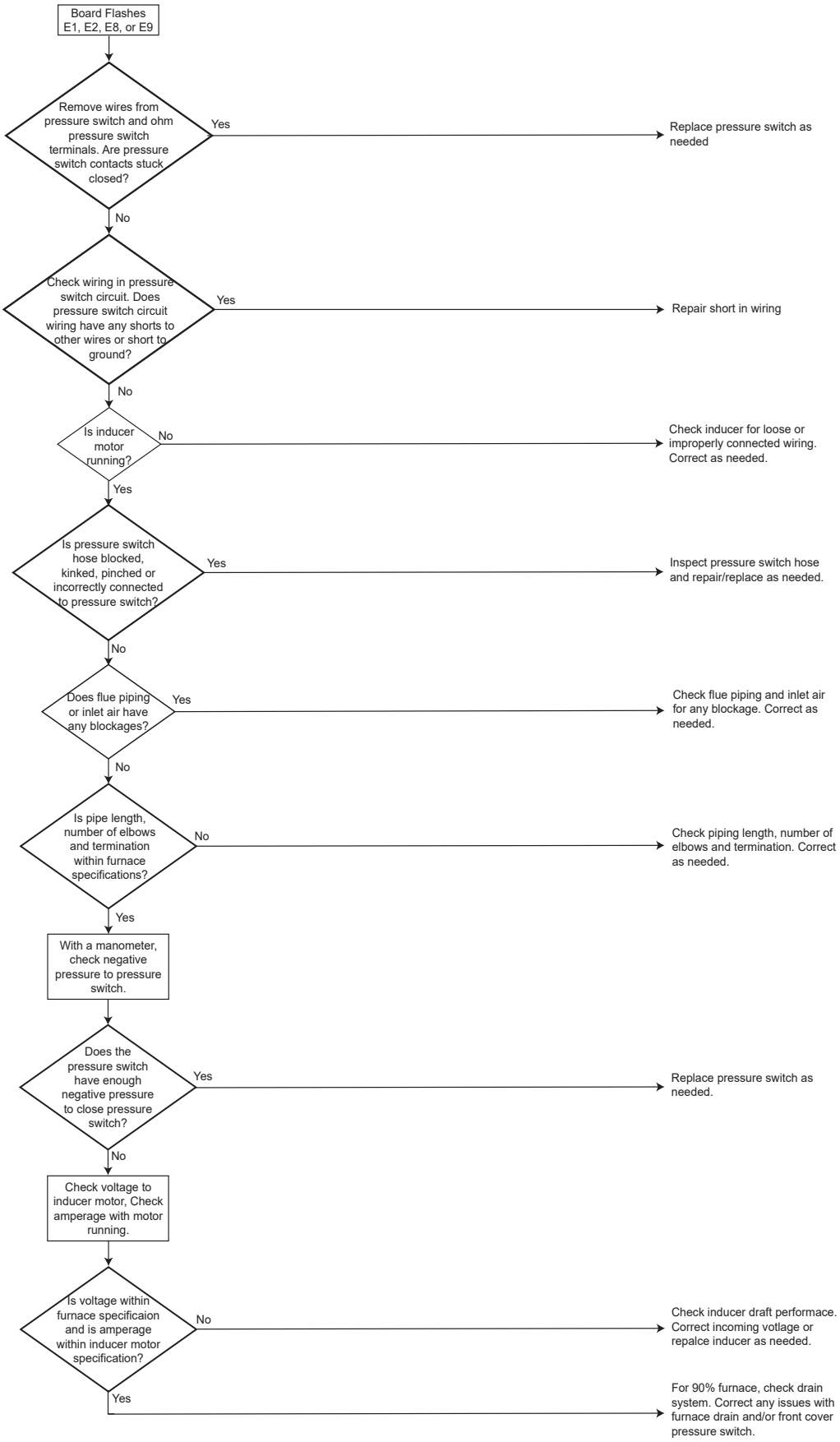

WIRING DIAGRAMS

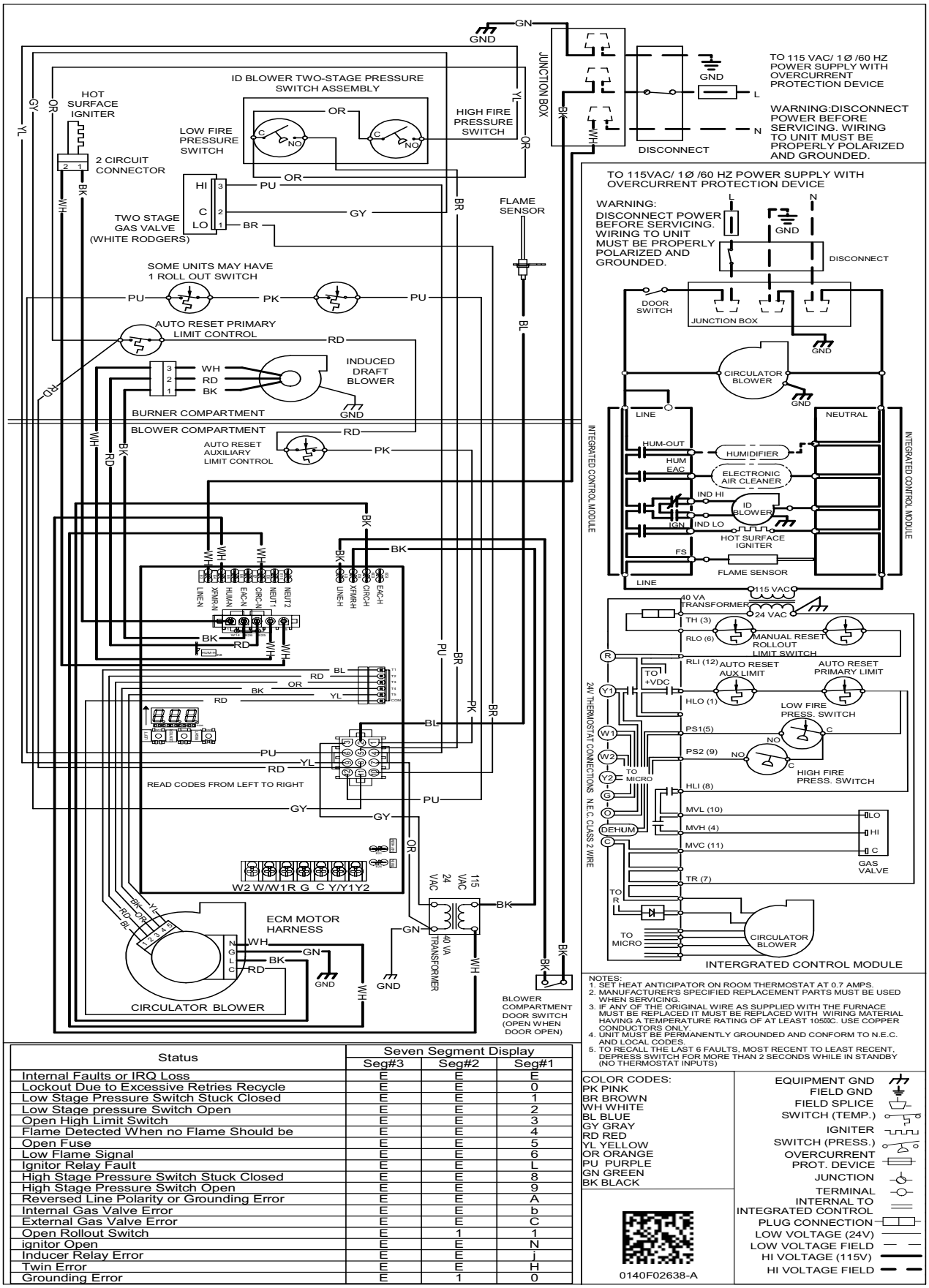

NOTES:
1. SET HEAT ANTICIPATOR ON ROOM THERMOSTAT AT 0.7 AMPS.
2. MANUFACTURER'S SPECIFIED REPLACEMENT PARTS MUST BE USED WHEN SERVICING.
3. IF ANY OF THE ORIGINAL WIRE AS SUPPLIED WITH THE FURNACE MUST BE REPLACED IT MUST BE REPLACED WITH WIRING MATERIAL HAVING A TEMPERATURE RATING OF AT LEAST 105ºC. USE COPPER CONDUCTORS ONLY.
4. UNIT MUST BE PERMANENTLY GROUNDED AND CONFORM TO N.E.C. AND LOCAL CODES.
5. TO RECALL THE LAST 6 FAULTS, MOST RECENT TO LEAST RECENT, DEPRESS SWITCH FOR MORE THAN 2 SECONDS WHILE IN STANDBY (NO THERMOSTAT INPUTS)

Status	Seven Segment Display		
	Seg#3	Seg#2	Seg#1
Internal Faults or IRQ Loss	E	E	E
Lockout Due to Excessive Retries Recycle	E	E	0
Low Stage Pressure Switch Stuck Closed	E	E	1
Low Stage pressure Switch Open	E	E	2
Open High Limit Switch	E	E	3
Flame Detected When no Flame Should be	E	E	4
Open Fuse	E	E	5
Low Flame Signal	E	E	6
Ignitor Relay Fault	E	E	L
High Stage Pressure Switch Stuck Closed	E	E	8
High Stage Pressure Switch Open	E	E	9
Reversed Line Polarity or Grounding Error	E	E	A
Internal Gas Valve Error	E	E	b
External Gas Valve Error	E	E	C
Open Rollout Switch	E	1	1
ignitor Open	E	E	N
Inducer Relay Error	E	E	j
Twin Error	E	E	H
Grounding Error	E	1	0

COLOR CODES:
PK PINK
BR BROWN
WH WHITE
BL BLUE
GY GRAY
RD RED
YL YELLOW
OR ORANGE
PU PURPLE
GN GREEN
BK BLACK

0140F02638-A

EQUIPMENT GND
FIELD GND
FIELD SPLICE
SWITCH (TEMP.)
IGNITER
SWITCH (PRESS.)
OVERCURRENT PROT. DEVICE
JUNCTION
TERMINAL
INTERNAL TO INTEGRATED CONTROL
PLUG CONNECTION
LOW VOLTAGE (24V)
LOW VOLTAGE FIELD
HI VOLTAGE (115V)
HI VOLTAGE FIELD

Wiring is subject to change. Always refer to the wiring diagram on the unit for the most up-to-date wiring.