Service Instructions

34.5" Chassis ACVM97*BA/AMVM97*BA / GCVM97*BA/GMVM97*BA Modulating Gas Furnaces *BA revision & above*

Pride and workmanship go into every product to provide our customers with quality products. It is possible, however, that during its lifetime a product may require service. Products should be serviced only by a qualified service technician who is familiar with the safety procedures required in the repair and who is equipped with the proper tools, parts, testing instruments and the appropriate service manual. **REVIEW ALL SERVICE INFORMATION IN THE APPROPRIATE SERVICE MANUAL BEFORE BEGINNING REPAIRS.**

WARNING

ONLY PERSONNEL THAT HAVE BEEN TRAINED TO INSTALL, ADJUST, SERVICE, MAINTENANCE OR REPAIR (HEREINAFTER, "SERVICE") THE EQUIPMENT SPECIFIED IN THIS MANUAL SHOULD SERVICE THE EQUIPMENT.

THIS EQUIPMENT IS NOT INTENDED FOR USE BY PERSONS (INCLUDING CHILDREN) WITH REDUCED PHYSICAL, SENSORY OR MENTAL CAPABILITIES, OR LACK OF EXPERIENCE AND KNOWLEDGE, UNLESS THEY HAVE BEEN GIVEN SUPERVISION OR INSTRUCTION CONCERNING USE OF THE APPLIANCE BY A PERSON RESPONSIBLE FOR THEIR SAFETY.

CHILDREN SHOULD BE SUPERVISED TO ENSURE THAT THEY DO NOT PLAY WITH THE EQUIPMENT.

THE MANUFACTURER WILL NOT BE RESPONSIBLE FOR ANY INJURY OR PROPERTY DAMAGE ARISING FROM IMPROPER SUPERVISION, SERVICE OR SERVICE PROCEDURES. IF YOU SERVICE THIS UNIT, YOU ASSUME RESPONSIBILITY FOR ANY INJURY OR PROPERTY DAMAGE WHICH MAY RESULT. IN ADDITION, IN JURISDICTIONS THAT REQUIRE ONE OR MORE LICENSES TO SERVICE THE EQUIPMENT SPECIFIED IN THIS MANUAL, ONLY LICENSED PERSONNEL SHOULD SERVICE THE EQUIPMENT. IMPROPER SUPERVISION, INSTALLATION, ADJUSTMENT, SERVICING, MAINTENANCE OR REPAIR OF THE EQUIPMENT SPECIFIED IN THIS MANUAL, OR ATTEMPTING TO INSTALL, ADJUST, SERVICE OR REPAIR THE EQUIPMENT SPECIFIED IN THIS MANUAL WITHOUT PROPER SUPERVISION OR TRAINING MAY RESULT IN PRODUCT DAMAGE, PROPERTY DAMAGE, PERSONAL INJURY OR DEATH.

WARNING

DO NOT BYPASS SAFETY DEVICES

TABLE OF CONTENTS

Important Information 2
Product Identificatication 5
System Operation....6
Scheduled Maintenance....21
Servicing....27
Checking Voltage....28
Checking Wiring 28
Checking Thermostat, Wiring 28
Checking Transformer and Control Circuit 29
Checking Duct Static 32
Checking Temperature Rise 32
Checking Primary Limit Control....33
Checking Auxiliary Limit Control....34
Checking Flame Rollout Control....34
Inducer Draft Blower Motor....35
Checking Modulating Gas Valve....35
Checking Main Burners 36
Checking Orifices 36
Checking Gas Pressure....36
Checking Hot Surface....38
Checking For Flashback....38
Checking Pressure Control....39
High Altitude Application (USA) 39
Checking For Delayed Ignition 40
Checking Integrated Ignition Control Boards....40
Checking Flame Sensor 41
Troubleshooting....42
Wiring Diagram....61

This manual is to be used by qualified, professionally trained HVAC technicians only. Goodman does not assume any responsibility for property damage or personal injury due to improper service procedures or services performed by an unqualified person.

The material in this manual does not supercede manufacturer's installation and operation instructions

RS6612015r9
November 2026

AMANA® HEATING & AIR CONDITIONING / TM 2026 Amana. Manufactured under license by Daikin. Limited warranty provided by the manufacturer. All trademarks are the property of their respective owners.

IMPORTANT INFORMATION

RECOGNIZE SAFETY SYMBOLS, WORDS AND LABELS

DANGER
PELIGRO



CARBON MONOXIDE POISONING HAZARD

Special Warning for Installation of Furnace or Air Handling Units in Enclosed Areas such as Garages, Utility Rooms or Parking Areas

Carbon monoxide producing devices (such as an automobile, space heater, gas water heater, etc.) should not be operated in enclosed areas such as unventilated garages, utility rooms or parking areas because of the danger of carbon monoxide (CO) poisoning resulting from the exhaust emissions. If a furnace or air handler is installed in an enclosed area such as a garage, utility room or parking area and a carbon monoxide producing device is operated therein, there must be adequate, direct outside ventilation.

This ventilation is necessary to avoid the danger of CO poisoning which can occur if a carbon monoxide producing device continues to operate in the enclosed area. Carbon monoxide emissions can be (re)circulated throughout the structure if the furnace or air handler is operating in any mode.

CO can cause serious illness including permanent brain damage or death.

810359-216

RIESGO DE INTOXICACIÓN POR MONÓXIDO DE CARBONO

Advertencia especial para la instalación de calentadores ó manejadoras de aire en áreas cerradas como estacionamientos ó cuartos de servicio.

Los equipos ó aparatos que producen monóxido de carbono (tal como automóvil, calentador de gas, calentador de agua por medio de gas, etc) no deben ser operados en áreas cerradas debido al riesgo de envenenamiento por monóxido de carbono (CO) que resulta de las emisiones de gases de combustión. Si el equipo ó aparato se opera en dichas áreas, debe existir una adecuada ventilación directa al exterior.

Esta ventilación es necesaria para evitar el peligro de envenenamiento por CO, que puede ocurrir si un dispositivo que produce monóxido de carbono sigue operando en el lugar cerrado.

Las emisiones de monóxido de carbono pueden circular a través del aparato cuando se opera en cualquier modo.

El monóxido de carbono puede causar enfermedades severas como daño cerebral permanente ó muerte.

810359-216

RISQUE D'EMPOISONNEMENT AU MONOXYDE DE CARBONE

Avertissement spécial au sujet de l'installation d'appareils de chauffage ou de traitement d'air dans des endroits clos, tels les garages, les locaux d'entretien et les stationnements.

Evitez de mettre en marche les appareils produisant du monoxyde de carbone (tels que les automobile, les appareils de chauffage autonome,etc.) dans des endroits non ventilés tels que les d'empoisonnement au monoxyde de carbone. Si vous devez faire fonctionner ces appareils dans un endroit clos, assurez-vous qu'il y ait une ventilation directe provenant de l'exterieur.

Cette ventilation est nécessaire pour éviter le danger d'intoxication au CO pouvant survenir si un appareil produisant du monoxyde de carbone continue de fonctionner au sein de la zone confinée.

Les émissions de monoxyde de carbone peuvent etre recirculés dans les endroits clos, si l'appareil de chauffage ou de traitement d'air sont en marche.

Le monoxyde de carbone peut causer des maladies graves telles que des dommages permanents au cerveau et meme la mort.

810359-216

WARNING

TO PREVENT THE RISK OF PROPERTY DAMAGE, PERSONAL INJURY, OR DEATH, DO NOT STORE COMBUSTIBLE MATERIALS OR USE GASOLINE OR OTHER FLAMMABLE LIQUIDS OR VAPORS IN THE VICINITY OF THIS APPLIANCE.

WARNING

HIGH VOLTAGE

DISCONNECT **ALL** POWER BEFORE SERVICING OR INSTALLING THIS UNIT. MULTIPLE POWER SOURCES MAY BE PRESENT. FAILURE TO DO SO MAY CAUSE PROPERTY DAMAGE, PERSONAL INJURY OR DEATH.

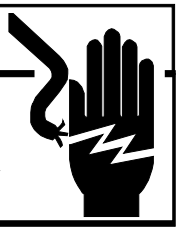

WARNING

IF THE INFORMATION IN THESE INSTRUCTIONS IS NOT FOLLOWED EXACTLY, A FIRE OR EXPLOSION MAY RESULT CAUSING PROPERTY DAMAGE, PERSONAL INJURY OR LOSS OF LIFE.

– DO NOT STORE OR USE GASOLINE OR OTHER FLAMMABLE VAPORS AND LIQUIDS IN THE VICINITY OF THIS OR ANY OTHER APPLIANCE.

– WHAT TO DO IF YOU SMELL GAS:
- DO NOT TRY TO LIGHT ANY APPLIANCE.
- DO NOT TOUCH ANY ELECTRICAL SWITCH; DO NOT USE ANY PHONE IN YOUR BUILDING.
- IMMEDIATELY CALL YOUR GAS SUPPLIER FROM A NEIGHBOR'S PHONE. FOLLOW THE GAS SUPPLIER'S INSTRUCTIONS.
- IF YOU CANNOT REACH YOUR GAS SUPPLIER, CALL THE FIRE DEPARTMENT.

– INSTALLATION AND SERVICE MUST BE PERFORMED BY A QUALIFIED INSTALLER, SERVICE AGENCY OR THE GAS SUPPLIER.

WARNING

SHOULD OVERHEATING OCCUR OR THE GAS SUPPLY FAIL TO SHUT OFF, TURN OFF THE MANUAL GAS SHUTOFF VALVE EXTERNAL TO THE FURNACE BEFORE TURNING OFF THE ELECTRICAL SUPPLY.

OUTSIDE THE U.S., **call 1-713-861-2500**.
(Not a technical assistance line for dealers.) Your telephone company will bill you for the call.

IMPORTANT INFORMATION

FOR YOUR SAFETY READ BEFORE OPERATING

WARNING

If you do not follow these instructions exactly, a fire or explosion may result causing property damage, personal injury or loss of life.

A. This appliance does not have a pilot. It is equipped with an ignition device which automatically lights the burners. Do not try to light the burners by hand.

B. BEFORE OPERATING smell around the appliance area for gas. Be sure to smell next to the floor because some gas is heavier than air and will settle on the floor.

WHAT TO DO IF YOU SMELL GAS

- Do not try to light any appliance.
- Do not touch any electric switch; do not use any telephone in your building.
- Immediately call your supplier from a neighbor's phone. Follow the gas suppliers instructions.
- If you cannot reach your gas supplier, call the fire department.

C. Use only your hand to move the gas control switch or knob. Never use tools. If the gas control switch or knob will not operate, don't try to repair it, call a qualified service technician. Force or attempted repair may result in a fire or explosion.

D. Do not use this appliance if any part has been under water. Immediately call a qualified service technician to inspect the appliance and to replace any part of the control system and any gas control which has been under water.

OPERATING INSTRUCTIONS

1. STOP! Read the safety information above on this label.
2. Set the thermostat to lowest setting.
3. Turn off all electric power to the appliance.
4. This appliance is equipped with an automatic ignition system which automatically lights the burners. Do not try to light the burners by hand.
5. Remove control access panel.
6. Move the gas control switch or knob to "OFF".

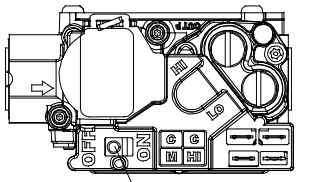

GAS CONTROL SWITCH SHOWN IN "ON" POSITION

7. Wait five (5) minutes to clear out any gas. If you then smell gas, STOP! Follow "B" in the safety information above on this label. If you don't smell gas, go to the next step.
8. Move the gas control switch or knob to "ON".
9. Replace control access panel.
10. Turn on all electric power to the appliance.
11. Set the thermostat to the desired setting.
12. If the appliance will not operate, follow the instructions "To Turn Off Gas To Appliance" and call your service technician or gas supplier.

TO TURN OFF GAS TO APPLIANCE

1. Set the thermostat to its lowest setting.
2. Turn off all electric power to the appliance if service is to be performed.
3. Remove control access panel.
4. Move the gas control switch or knob to "OFF". Do not force.
5. Replace control access panel.

WARNING: Improper installation, adjustment, alteration, service or maintenance can cause injury or property damage. Refer to the user's information manual provided with this furnace. For assistance or additional information consult a qualified installer, service agency or the gas supplier.

This furnace must be installed in accordance with the manufacturers instructions and local codes. In the absence of local codes, follow the National Fuel Gas Code, ANSI Z223.1.

For indoor installation.

PGB & PGJ
For outdoor installation only.

WARNING: If not installed, operated and maintained in accordance with the manufacturer's instructions, this product could expose you to substances in fuel combustion which can cause death or serious Illness.

This product contains Fiberglass insulation.

FOR YOUR SAFETY Do not store or use gasoline or other flammable vapors and liquids in the vicinity of this or any other appliance.

0140F00001P

IMPORTANT INFORMATION

⚠ WARNING

THIS UNIT SHOULD NOT BE CONNECTED TO, OR USED IN CONJUNCTION WITH, ANY DEVICES THAT ARE NOT DESIGN CERTIFIED FOR USE WITH THIS UNIT OR HAVE NOT BEEN TESTED AND APPROVED BY THE MANUFACTURER. SERIOUS PROPERTY DAMAGE OR PERSONAL INJURY, REDUCED UNIT PERFORMANCE AND/OR HAZARDOUS CONDITIONS MAY RESULT FROM THE USE OF DEVICES THAT HAVE NOT BEEN APPROVED OR CERTIFIED BY THE MANUFACTURER.

CONSIGNES DÉ SECURITÉ - LIRE AVANT D'ALLUMER L'APPAREIL

AVERTISSEMENT: Le non-respect des instructions qui suivent peut entraîner un risque d'incendie ou d'explosion causant des dommages, des blessures ou la mort.

A. Cet appareil comporte pas de veilleuse. Il est muni d'un mécanisme qui allume automatiquement le brûleur. N'allumez paz le brûleur manuellement.

B. Sentir tout autour de l'appariel AVANT D'ALLUMER afin de déceler toute fuite de gaz. Assurez-vous de sentir tout près du plancher car certains gaz sont plus lourds que l'air et se déposeront sur le plancher.

SI VOUS SENTEZ UNE ODEUR DE GAZ:

- Ne tentez d'allumer aucun appariel.
- Ne touchez pas aux interrupteurs électriques; n'utiliser aucun téléphone dans l'édifice où vous vous trouvez.
- Appelez immédiatement votre fournisseur de gaz en utilisant le téléphone d'un voisin et suivez les instructions du fournisseur.
- Appelez les pompiers si vous ne parvenez pas à rejoindre votre fournisseur de gaz.

C. N'utiliser que votre main pour pousser ou tourner le commande du gaz. N'utilisez jamais d'outils. Si vous ne parvenez pas à pousser ou à tourner la commande, ne tentez pas de la réparer; appelez un réparateur qualifié. Forcer la commande ou essayer de la réparer peut entraîner un risque d'incendie ou d'explosion.

D. N'utilisez pas cet appareil si l'une de ses parties a été dans l'eau. Si cela se produit, demandez immédiatement à un réparateur qualifié d'inspecter l'appareil et de remplacer toute pièce du systeme de contrôle et toute commande de gaz ayant été dans l'eau.

0140F00002P

INSTRUCTIONS DE SERVICE

1. UN INSTANT! Lisez d'abord les consignes de sécurité ci-dessus.
2. Réglez le thermostat à son point le plus bas.
3. Coupez l'alimentation électrique de l'appareil.
4. Cet appareil est muni d'un mécanisme qui allume automatiquement le brûleur. Ne tentez pas d'allumer le brûleur manuellement.
5. Retirez le panneau d'accès de la commande.
6. Mettez la commande de gaz à la position ARRÊT ("OFF").
7. Attendez cinq (5) minutes afin de permettre à tout gaz présent d'être évacué. Si vous sentez une odeur de gaz à ce moment, ARRETÊZ! et suivez les consignes de sécurité données au paragraphe B ci-dessus. Si vous ne sentez pas de gaz, passez à l'étape suivante.
8. Mettez la commande de gaz à la position MARCHE ("ON").
9. Remettez la panneau d'accès de la commande en place.
10. Rétablissez l'alimenation électrique de l'appareil.
11. Réglez le thermostat à le température désirée.
12. Si l'appareil ne fonctionne pas, suivez les instructions intituleés "Arrêt du gaz" et appelez un réparateur qualifie ou votre fournisseur de gaz.

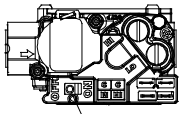

Commande de gaz en position "MARCHE"

ARRÊT DU GAZ

1. Réglez le thermostat à son point le plus bas.
2. Coupez l'alimentation électrique de l'appareil si vous devez effectuer un entretien.
3. Retirez le panneau d'accès de la commande.
4. Mettez la commande de gaz à la position ARRÊT ("OFF").
5. Remettez le panneau d'accès de la commande en place.

PRODUCT IDENTIFICATION

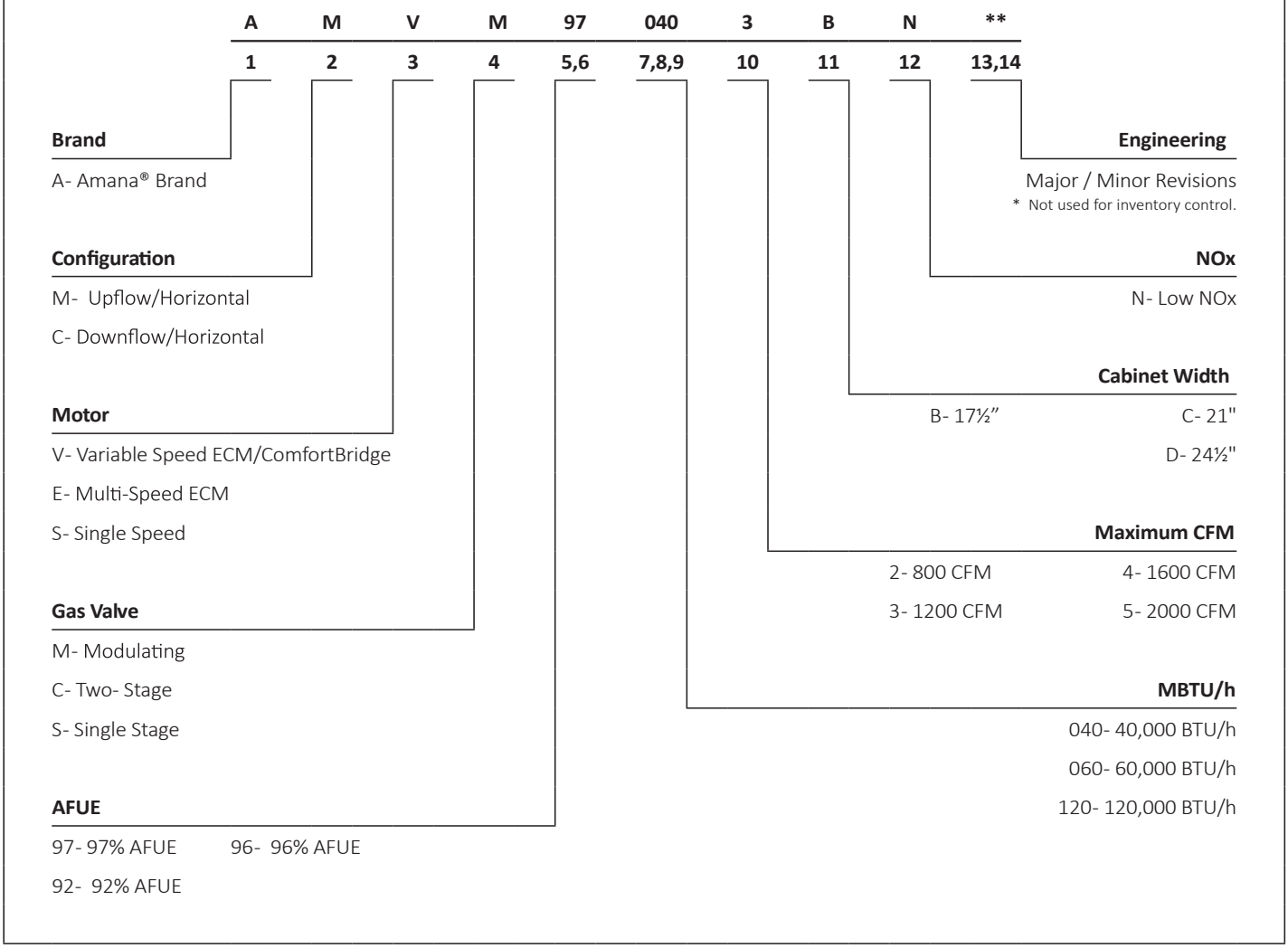

SYSTEM OPERATION

Control System – General Information

The furnace contains internal logic to control equipment staging. An adjustable target runtime is available (range from 1 to 240 minutes) and set through the appropriate system menu. The system will constantly be adjusting staging in an effort to satisfy the thermostat call for cooling (Y only) or heating (W Only) as close to the set target runtime as possible. See information below for setting options.

Comfort Setting Menu (CFS): There are 6 options available in the Comfort Setting Menu which impacts both the System Target Runtime and Dual Fuel Operation. Dual Fuel operation adjustments only apply if a communicating heat pump is installed Comfort Setting Options 1 – 5 have set values for the System Target Runtime and option 6 enables additional menus to customize all comfort settings. See list below for the System Target Run times associated with the first 5 Comfort Settings. These first 5 options are setup to help satisfy the thermostat slower or faster based on the selection where option 1, with a 10 minute Target Runtime, is attempting to satisfy much faster than option 5, with a 30 minute Target Runtime.

System Target Runtime:
Comfort Setting Option 1) 10 Minute System Target Runtime
Comfort Setting Option 2) 15 Minute System Target Runtime
Comfort Setting Option 3) 20 Minute System Target Runtime
Comfort Setting Option 4) 25 Minute System Target Runtime
Comfort Setting Option 5) 30 Minute System Target Runtime

Dual Fuel Adjustment: This system will automatically determine if the heat pump is capable of satisfying the thermostat in the selected System Target Runtime. If the heat pump is unable to satisfy in the selected time, dual fuel settings will determine how many attempts should be given to the heat pump before temporarily locking it out and using the furnace. These dual fuel settings also determine at what time the system should remove the temporary heat pump lockout and run the heat pump again. There are four adjustable items associated with Dual Fuel control. In the same way as the System Target Time, each of these items have defaulted values for Comfort Settings 1 – 5. Only when Comfort Setting 6 is selected will each item be available for full adjustment.

1. **Stage Up Percent (7 segment menu SUP): This is a value that determines how far past the target runtime the system should continue running the heat pump before transitioning to the furnace. For example, assume this menu was set to 20% with a target runtime of 20 minutes. If the thermostat did not remove the heating call after 20 minutes, the system would allow for an additional 20% heat pump run (20% of the 20 minute target is an additional 4 minutes). In this case, the system would transition to gas heat after 24 minutes if the thermostat call was still present. Each time this occurs, the system records this as a strike against the heat pump (the strike is important when looking at the Over Target Threshold)**
2. **Over Target Threshold (7 segment menu Ott): If the heat pump has consecutively transitioned to gas heat for the selected Over Target Threshold amount of times, meaning for this many consecutive cycles it has been unable to satisfy the target time by itself, then the heat pump will be temporarily locked out and the furnace will become the primary heat source.**
3. **Stage Down Percent (7 segment menu SdP): This only applies when the heat pump is in a temporary lockout condition. In this case, the system will be trying to determine when the best time is to remove the lockout and run the heat pump again. To determine the best time to remove the heat pump lockout the system looks at how easily the furnace is able to satisfy the thermostat using Low Stage Gas Heat Only. Assume this setting is 15% and the target time is 20 minutes. If Low Stage Gas Heat can satisfy the thermostat in less than 17 minutes (20 minutes - 15% = 17 minutes) then the algorithm records a strike against the gas furnace. (this strike is important when looking at the Under Target Threshold).**
4. **Under Target Threshold (7 segment menu Utt): If the furnace is able to satisfy the thermostat using Low Stage Gas Heat Only for the selected number of consecutive cycles the heat pump lockout will be temporarily removed. The heat pump will then be used during the next cycle. If the heat pump can satisfy the thermostat in less than the System Target Runtime the temporary heat pump hold will be completely removed and the heat pump will become the primary heat source again. If it fails to do so, the strike count against the furnace will be reset and the furnace will remain the temporary primary heat source until the Under Target Threshold is reached again.**

SYSTEM OPERATION

The system will automatically make adjustments in an attempt to satisfy the thermostat as close to this target runtime as possible. After a power cycle or mode change (cooling to heating or heating to cooling) the system will run full capacity for the selected mode during the first thermostat call. Based on the selected target runtime and how long the initial cycle takes to satisfy the thermostat, the control algorithm will adjust the system stage times for a 2 stage unit or the capacity demand percentage for an inverter / modulating unit for the next cycle. **NOTE**: actual run times may change depending on variations of load throughout the day.

The following table shows the default values for all Comfort Setting Options (1 – 5)

Comfort Setting Option	Target Time (Minutes)	Stage Up Percentage (%)	Stage Down Percentage (%)	Over Target Threshhold (Strike Count)	Under Target Threshhold (Strike Count)
1	10	20	20	2	10
2	15	20	20	4	8
3	20	20	20	6	6
4	25	20	20	8	4
5	30	20	20	10	2

The following table shows the ranges for each of item when the adjustable Comfort Setting Option 6 is selected. The table shows the minimum value, the maximum value and the defaulted value. All items can be adjusted up or down by increments of 1 which provides full flexibility for all items. Note: it is critical that these numbers be set properly. If Comfort Setting option 3 is desired but a target time of 60 is preferred, select Comfort Setting Option 6 to enable all the adjustable menus, set the Target Time to 60 and make sure the other menus are set to match that of Comfort Setting Option 3.

Menu	Minimum Value	Maximum Value	Default Value
Target Time (t9t)	1 minute	240 minutes	60 minutes
Stage Up Percent (SUP)	0%	100%	20%
Stage Down Percent (SdP)	0%	100%	20%
Over Target Threshold (Ott)	1 strike	254 strikes	20 strikes
Under Target Threshold (Utt)	1 strike	254 strikes	20 strikes

CIRCULATOR BLOWER SPEED

The Airflow quantity is displayed as a number on the three 7 segment displays, rounded to the nearest 100 CFM. The display alternates airflow amount and the system operating status.

Each furnace has a "Maximum CFM" it is capable of providing. All fan operations (Constant CFM, Cooling Airflow Profiles, Low and High Stage gas heat airflow, outdoor Air Conditioner / Heat Pump Airflow, etc.) are based off of multipliers which are percentages of this maximum CFM. Max CFM is as follows:

3 Ton Models 1400 CFM
4 Ton Models 1760 CFM
5 Ton Models 2200 CFM

Setup Furnace Airflow: Adjust the Gas Heating Airflow menu (gAF) setting to the desired percentage of maximum airflow. In most cases the default gas heat airflow will provide a temperature rise near the middle of the acceptable range. High Stage CFM can be calculated by the following equation: CFM = Max CFM * Selected Heating Airflow Percentage.

For Communicating Outdoor Units: Main airflow adjustment is not required. The Outdoor unit will determine the appropriate amount of indoor airflow to request. Airflow Trims can be made if desired.

For Non-Communicating outdoor units, determine the proper airflow (based off tonnage of) the outdoor unit. Most cooling systems are designed to work with airflow between 350 and 450 CFM per ton. 400 CFM/TON is the industry standard. Once desired airflow has been determined, see Tonnage / Airflow table to identify the Tonnage Selection that is closest to the desired airflow. This table is based on 400 CFM per ton where Airflow = (400 CFM) x (Selected Tonnage).

Example: if 1520 CFM is the desired airflow the Tonnage Selection that matches this is 3.8

Enter the Tonnage (ton) menu either by using the on board push buttons or phone application and select the Tonnage Selection you identified. Note: Trim is also available if additional adjustment is required.

Tonnage Selection	Airflow	Tonnage Selection	Airflow	Tonnage Selection	Airflow	Tonnage Selection	Airflow
1	400	2.3	920	3.6	1440	4.9	1960
1.1	440	2.4	960	3.7	1480	5	2000
1.2	480	2.5	1000	3.8	1520	5.1	2040
1.3	520	2.6	1040	3.9	1560	5.2	2080
1.4	560	2.7	1080	4	1600	5.3	2120
1.5	600	2.8	1120	4.1	1640	5.4	2160
1.6	640	2.9	1160	4.2	1680	5.5	2200
1.7	680	3	1200	4.3	1720	5.6	2240
1.8	720	3.1	1240	4.4	1760	5.7	2280
1.9	760	3.2	1280	4.5	1800	5.8	2320
2	800	3.3	1320	4.6	1840	5.9	2360
2.1	840	3.4	1360	4.7	1880	6	2400
2.2	880	3.5	1400	4.8	1920		

COOLING AIRFLOW RAMPING PROFILES

The multi-circulator blower also offers several custom ON/OFF ramping profiles. These profiles may be used to enhance cooling performance and increase comfort level. The ramping profiles are selected using the Cooling Airflow Profile menu (if push buttons are used, use the CAP menu to select the desired profile). Refer to the bullet points below for a description of each ramping profile.

SYSTEM OPERATION

HEATING CFM

MODEL & TEMP RISE RANGE (MID RISE)	*CVM970603BNB* 35-65 (50)		*CVM970803BNB* 35-65 (50)		*CVM970804CNB* 35-65 (50)		*CVM971005CNB* 35-65 (50)		
	CFM	RISE	CFM	RISE	CFM	RISE	CFM	RISE	
RECOMMENDED CFM FOR 100% FIRING RATE & EXPECTED TEMPERATURE RISE	1080	50	1400	51	1430	50	1800	50	
LOWEST RECOMMENDED CFM FOR 100% FIRING RATE & EXPECTED TEMPERATURE RISE	830	65	1100	65	1100	65	1380	65	
MAXIMUM CFM FOR100% FIRING RATE & EXPECTED TEMPERATURE RISE	1400	38	1400	51	1760	41	2200	41	
MODEL & TEMP RISE RANGE (MID RISE)	***MVM970603BNB*** 25-55 (40)		***MVM970803BNB*** 30-60 (45)		***MVM970804CNB*** 25-55 (40)		***MVM971005CNB*** 35-65 (50)		***MVM971205DNB*** 35-65 (50)	
	CFM	RISE	CFM	RISE	CFM	RISE	CFM	RISE	CFM	RISE
RECOMMENDED CFM FOR 100% FIRING RATE & EXPECTED TEMPERATURE RISE	1370	40	1400	51	1760	41	1780	50	1950	55
LOWEST RECOMMENDED CFM FOR 100% FIRING RATE & EXPECTED TEMPERATURE RISE	990	55	1200	60	1320	55	1380	65	1670	65
MAXIMUM CFM FOR 100% FIRING RATE & EXPECTED TEMPERATURE RISE	1400	39	1400	51	1760	41	2200	41	2200	49

- **Profile A(1)** provides only an OFF delay of one (1) minute at 100% of the cooling demand

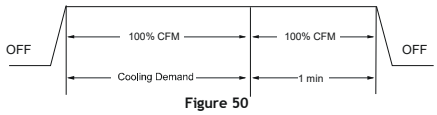

Figure 50

- **Profile B(2)** ramps up to full cooling demand airflow by first stepping up to 50% of the full demand for 30 seconds. The motor then ramps to 100% of the required airflow. A one (1) minute OFF delay at 100% of the cooling airflow is provided.

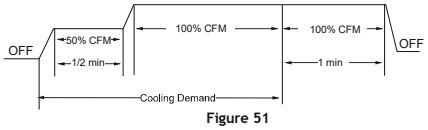

Figure 51

- **Profile C(3)** ramps up to 85% of the full cooling demand airflow and operates there for approximately 7 1/2 minutes. The motor then steps up to the full demand airflow. Profile C also has a one (1) minute 100% OFF delay.

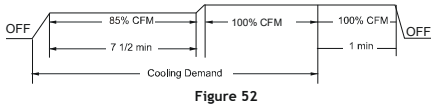

Figure 52

- **Profile D(4 or 5)** ramps up to 50% of the demand for 1/2 minute, then ramps to 85% of the full cooling demand airflow and operates there for approximately 7 1/2 minutes. The motor then steps up to the full demand airflow. Profile D has a 1/2 minute at 50% airflow OFF delay.

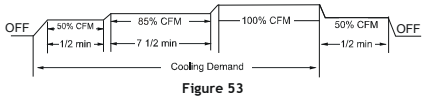

Figure 53

In general lower heating speeds will: reduce electrical consumption, lower operating sound levels of the blower, and increase the outlet air temperature delivered to the home if heat mode is running. If cooling mode is running the same airflow adjustment will decrease the outlet air temperature delivered to the home. The speeds available allow the blower performance to be optimized for the particular homeowner's needs.

LOW VOLTAGE WIRING - GENERAL INFORMATION

The Furnace functions with any thermostat that can be configured to provide 24VAC on Y for cooling calls and 24VAC on W for Heating calls. Based on these simple inputs, internal algorithms will decide how to control two stages of furnace heat in addition to any single or multi stage outdoor heating / cooling operation (the algorithms will handle dual fuel multistage systems as well). The thermostat must be setup to provide only a Y call when cooling is required and only a W call when heating is required. This is generally accomplished by selecting single stage heat / single stage cool mode during setup (if setup is required). Do not set thermostat to heat pump operation as system will not operate properly.

NOTE: The only exception is if a single stage non-communicating Heat Pump is connected to the furnace. Refer to Non-Communicating Single Stage Heat Pump diagram for details.

SYSTEM OPERATION

Thermostat connections to the control board are R, C, G, W, Y & Dehum. Provided the thermostat does not require a common wire as few as two thermostat wires may be used for heat only (R and W) or cool only (R and Y) systems. A minimum three thermostat wires may be used for heating and cooling systems (R, W and Y). Refer to thermostat wiring diagrams below for your system configuration.

Low voltage connections can be made through either the right or left side panel of the furnace. Thermostat wiring entrance holes are located in the blower compartment.

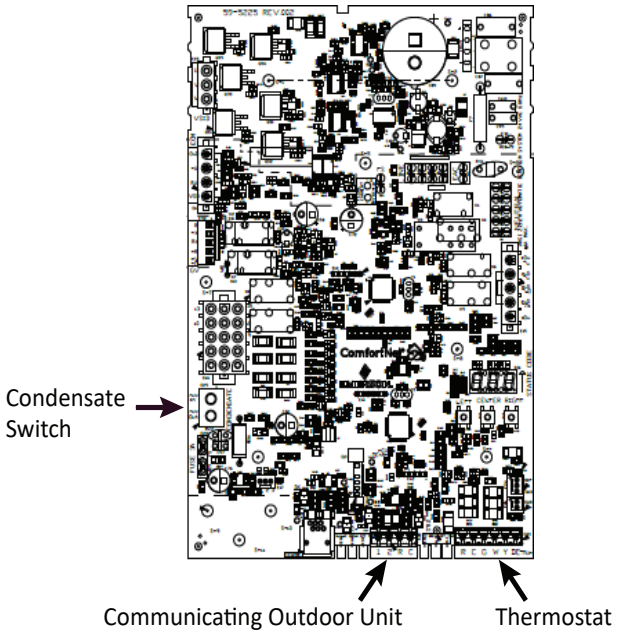

MAIN CONTROL BOARD

For gas heat only operations (no outdoor unit installed) the thermostat must be setup to provide a single stage W call when heating is required. See Gas Heat Only wiring diagram for wiring instructions.

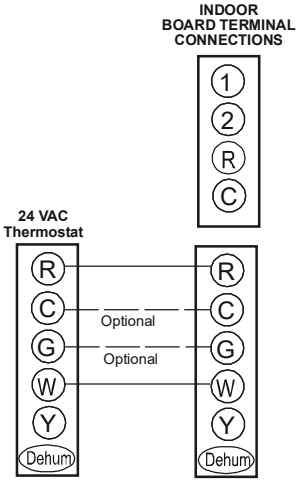

GAS HEAT ONLY

LOW VOLTAGE WIRING - COMMUNICATING OUTDOOR UNIT

Internal logic will control staging of all multi stage equipment (2 stage AC/HP units and Inverter AC/HP units). The thermostat is only required to provide a single stage heat / cool call and fan or dehumidification call during operation.

Two wires are required between the indoor unit and outdoor unit on the 1 and 2 terminals. It is recommended to install a separate transformer with all 2 stage outdoor units to reduce the power draw on the indoor transformer.

4 wires (R,C for power and 1, 2 for communications) can be used for AC applications. See wiring images for details.

Do not connect R & C between the indoor unit and the outdoor unit if there is already a transformer installed in the outdoor unit providing 24VAC to the outdoor control. In this case, just use 1 and 2 terminals for communications.

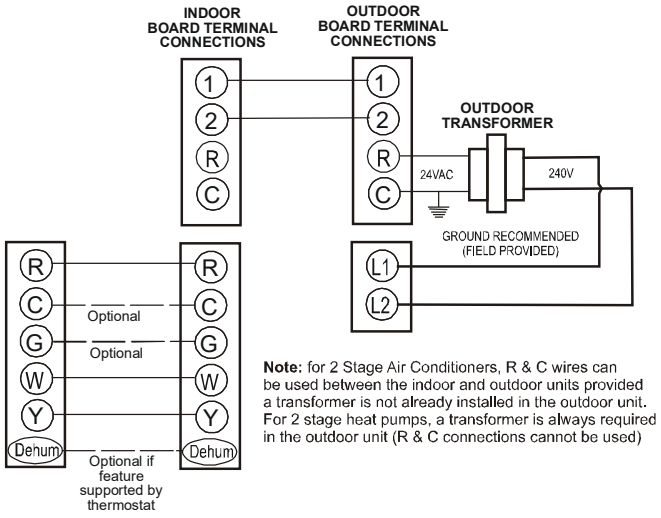

COMMUNICATING TWO STAGE AIR CONDITIONER OR HEAT PUMP

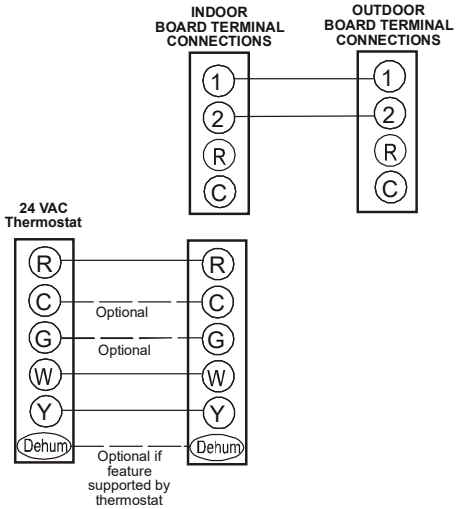

COMMUNICATING INVERTER AIR CONDITIONER OR HEAT PUMP

LOW VOLTAGE WIRING - NON-COMMUNICATING OUTDOOR UNIT

SYSTEM OPERATION

When using the furnace with a single stage non-communicating air conditioner or heat pump use the wiring methods shown. When using a single stage air conditioner, the thermostat must be setup for single stage heating and single stage cooling mode. When using a single stage heat pump, the thermostat must be setup for dual fuel operation where the reversing valve is energized in cooling mode (See Non-Communicating Single Stage Heat Pump wiring diagram). In both cases airflow must be selected using the tonnage menu where Airflow = (400 CFM) x (Selected Tonnage). Tonnage values range from 1 to 6 in 0.1 increments.

NOTE: Airflow will not go above the system Max CFM. If the tonnage value selected generates an airflow value above the Max CFM, the system will cap this value and not provide any more airflow than the Max CFM.

NOTE: When installing a non-communicating outdoor unit without using the Cool Cloud HVAC App, airflow adjustments must be made using the control push buttons. The initial version of the phone application will not be capable of making this setting change with this equipment configuration.

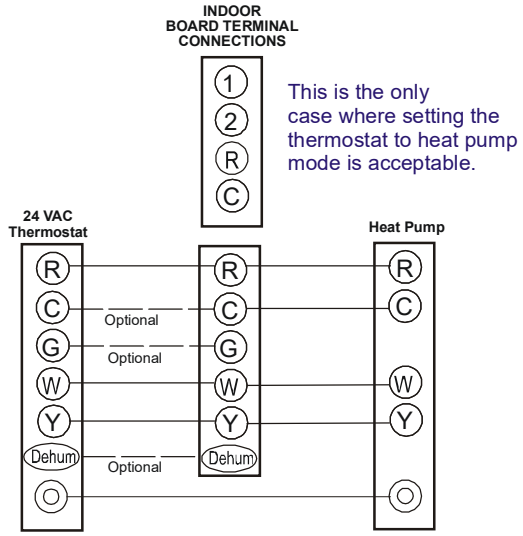

NON-COMMUNICATING SINGLE STAGE HEAT PUMP

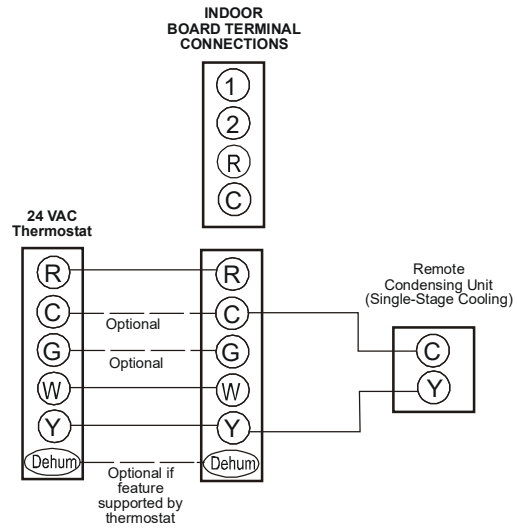

NON-COMMUNICATING SINGLE STAGE A/C

DEHUMIDIFICATION

The control board is equipped with a 24 volt dehum input in the thermostat wiring connector to be used with a thermostat or dehumidistat. Dehumidification mode allows the air handler's circulator blower to operate at a slightly lower speed (85% of calculated speed) during a combined thermostat call for cooling and thermostat call for dehumidification or dehumidistat call for dehumidification. This lower blower speed enhances dehumidification of the conditioned air as it passes through the AC coil. If using the dehum input with a thermostat, configure the thermostat to energize this terminal when dehumidification is desired. If using an external dehumidistat, connect it between the R and Dehum terminals. The dehumidistat must operate on 24 VAC and utilize a switch which *closes on humidity rise.* Refer to the low voltage wiring diagrams for additional wiring details.

Dehumidistat (close on humidity rise)

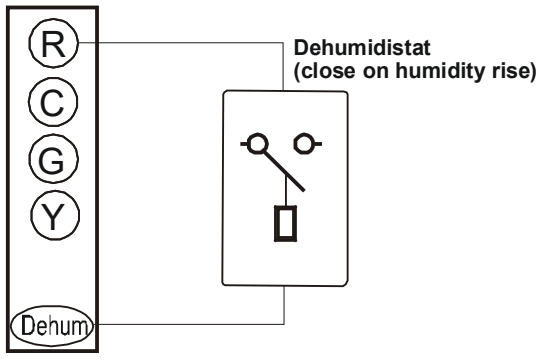

Figure 34

SYSTEM OPERATION

Dehumidification Control Options

Key Mitigations:

1. Full featured TS (dehum & overcool)
2. Connect G and dehum wire correctly
3. Dehumidistat

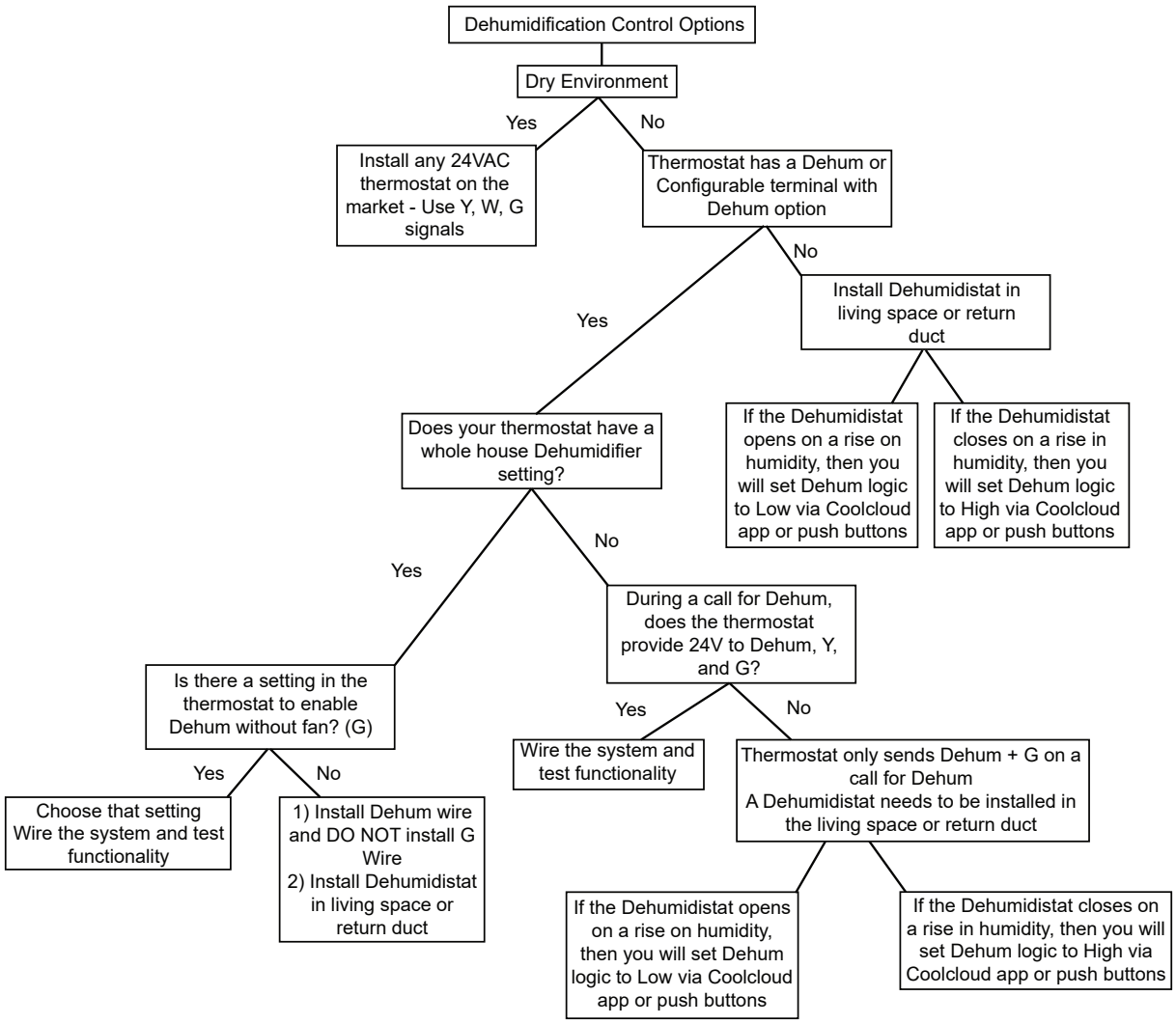

SYSTEM OPERATION

FOSSIL FUEL APPLICATIONS

This furnace can be used in conjunction with a heat pump in a fossil fuel application. A fossil fuel application refers to a combined gas furnace and heat pump installation which uses an outdoor temperature sensor to determine when to run the heat pump or gas furnace.

For non-communicating single stage heat pump installations a fossil fuel kit can be used. Follow the wiring guidelines in the fossil fuel kit installation instructions. All furnace connections must be made to the furnace integrated control module and the “FURNACE” terminal strip on the fossil fuel control board.

For Fossil Fuel systems the heat pump is given priority when a compressor balance point lockout condition is not present. Transitions from primary heat pump heating to backup gas heating will result in full capacity operation during the first thermostat call. The furnace PCB algorithms will then continuously adjust the stage times or the percent capacity after the initial call in an attempt to satisfy the thermostat at the target runtime.

Automatic Fossil Fuel Adjustment: If both compressor balance point and backup heat balance point lockouts are not present, the furnace algorithms will determine if the heat pump is capable of satisfying the thermostat in the selected target runtime. If the heat pump is not capable of this it will be locked out until the furnace can satisfy the thermostat, under the target runtime, while running completely in low stage. At that point, an attempt will be given to the heat pump and a decision made to keep using gas heat or to transition back to the heat pump.

115 VOLT LINE CONNECTION OF ELECTRONIC AIR CLEANER

⚠ WARNING

HIGH VOLTAGE !

TO AVOID PERSONAL INJURY OR DEATH DUE TO ELECTRICAL SHOCK, DISCONNECT ELECTRICAL POWER BEFORE SERVICING OR CHANGING ANY ELECTRICAL WIRING.



The accessory load specifications are as follows:

EAC	1.0 Amp maximum at 120 VAC

The furnace integrated control module is equipped with a line voltage accessory terminal for controlling power to an optional field supplied electronic air cleaner or any device required to operate in parallel with a circulating fan demand.

To connect an electronic air cleaner using the line voltage EAC terminal:

- Turn OFF power to the furnace before installing any accessories.
- Follow the air cleaner manufacturers’ instructions for locating, mounting, grounding, and controlling accessories. Utilize ¼”quick connect terminals to make accessory wiring connections to the furnace integrated control module.
- Connect the hot terminal utilized for accessory operation to the EAC terminal and the neutral side of power to NEUTRAL bus on the integrated furnace control or the neutral connection in the furnace junction box.
- All field wiring must conform to applicable codes.
- Connections should be made as shown.
- If it is necessary for the installer to supply additional line voltage wiring to the inside of the furnace, the wiring must conform to all local codes, and have a minimum temperature rating of 105°C.
- All line voltage wire splices must be made inside the furnace junction box.

AUXILIARY ALARM SWITCH:

The control is equipped with a 24VAC Aux Alarm to be used for a condensate switch install (designated by “Condensate” on the control). These contacts could also be used with compatible CO_2 sensors or Fire Alarms. By default, an AUX switch is normally closed and opens when the water level in the evaporator coil base pan reaches an undesirable level. The control will respond by turning off the outdoor condensing unit and display EEd. If the AUX switch is detected closed for 30 seconds, normal operation resumes and error messages are no longer displayed.

SYSTEM OPERATION

CoolCloudHVAC Phone Application – General Information

Examples of Cool Cloud HVAC Phone Application Screens
NOTE: Actual screen may look different based on the device being used.

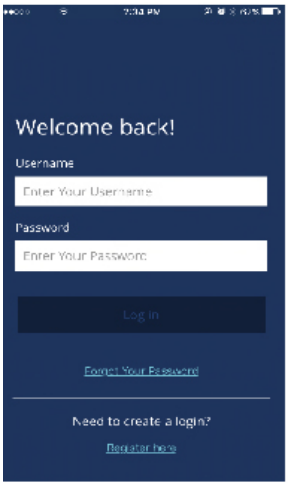

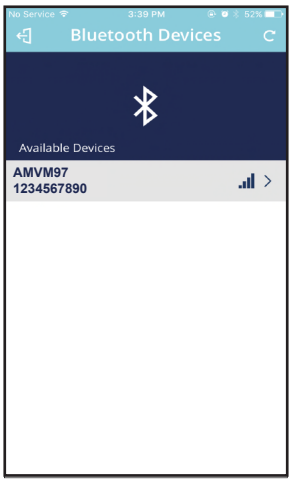

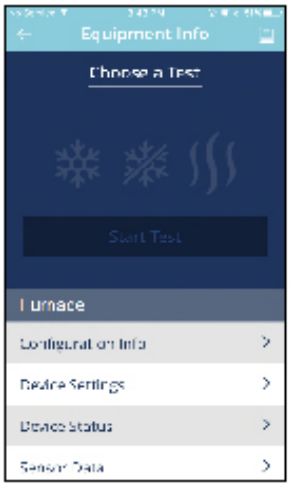

This furnace is Bluetooth ready and functions with a custom phone application designed to improve the setup / diagnostic experience of the installing contractor. Users can see specific model information, review active diagnostic error codes, observe system status during operation, make system menu adjustments such as the target runtime, add site visit notes and run system testing of all operational modes (heat / cool / fan) directly from the phone. The phone application is also capable of directly updating the furnace software anytime updates are available (the application will automatically notify the user if updates are available). Software update time could take approximately 15 minutes to complete. The phone must remain within Bluetooth range for only the download step of an update. The user will be notified once the download is completed and installation begins. At this time the phone can be removed from the Bluetooth range if necessary (NOTE: if the phone is out of range, the user will not know when the installation has completed or what the existing status of the installation is).
Download the CoolCloud Phone Application and create an account to get started. A Wi-Fi / Cellular connection will be required for account setup.

Connecting Phone Application to Furnace

When in close proximity to the furnace, the phone application will detect the Bluetooth Network being broadcasted by the system. Once the Bluetooth network is selected by the user, due to security reasons, the user will be prompted for a 3 digit access code before system information can be displayed. The 3 digit code will be displayed on the three seven segment displays of the furnace control board. A sight glass is located close to the control board that can be used to see these digits. The user must enter the access code into the phone application when prompted to do so in order to gain access to system information. 3 failed entry attempts will result in a new code being displayed on the control. If all 3 digits are not visible from the sight glass, the user has two options to connect.

Option 1) Perform thermostat task as instructed by the phone application to gain access. The following steps will explain what this task involves.

Step 1, ensure the thermostat is in an idle state (no cool, heat or fan calls). To do this, set the thermostat fan mode to Auto (not ON) and then remove any active heat / cool calls. This task needs to be completed within 5 minutes of the process beginning.

Step 2, provide any 24VAC call to the control from the thermostat (cooling, heating or fan will work). This task must occur within 8 minutes after the Step 1 is complete.

Step 3, remove the call that was provided during Step 2. This task must be completed within 1 minute after the call is provided during Step 2.

SYSTEM OPERATION

If the phone remains within Bluetooth range during the three steps, the user will be notified when each step has been completed and informed about what to do next. If the user is not within Bluetooth range during this process the phone application will still provide instruction about what tasks to complete. After all 3 steps have successfully been completed, the user will have access to system information once in range.

Option 2) Remove the furnace door, ensure the control has power and then read the 3 digits. The code will temporarily remain active after a power cycle so the door can put back on before making the connection if desirable. NOTE: power will be cycled to the control board with this option. If it is not desirable to cycle power to the unit for diagnostic purposes Option 1 may be a better method to connect.

At power-up, the furnace control will display the unit address (a two digit number) on the 2nd and 3rd characters of the three seven segment displays. After the furnace control has completed its' internal start-up routine, the furnace control will display the Status Menu.
The control board will display "Id L" while in idle (stand-by) mode waiting for a call from the thermostat. The furnace control is now ready to receive inputs from the room thermostat.
The furnace control board will detect any compatible communicating outdoor unit connected to it. Items that appear in the main menu will vary accordingly. Example, you will not see heat pump specific menus unless a compatible heat pump is detected by the furnace control.

Push Button



Three push-buttons on the control board may be used to navigate menus and select options. The three buttons are labeled Left, Center and Right. The center button is used to enter into the option menu and make the selection, the left and right buttons are used to browse the main menu and option menus. When the center button is pressed in the main menu, the furnace control will go to the option menu and display the default or previously-selected option. Pressing the left or right button will display the next available option. When the next adjustable or selectable option is displayed, the furnace control will flash the option with ½ second ON and ½ second OFF indicating the option has not yet been selected.
To select an option; press and release the center button to stop the current option from flashing. When the option has stopped flashing, press the center button again to select that option.

While navigating through options; if no buttons are pressed during a 30 second time period, the display will time-out and return to the Status Menu. Simultaneously pressing & releasing any two buttons will also return the furnace control back to the Status Menu. If the previously displayed option was not selected and a timeout occurs, the displayed option will not be stored in control memory as a selected option.
The Status Menu includes the following items;

- The operation mode
- Blower CFM (if blower is running)
- Humidification/Dehumidification mode (if active)
- Ventilator operation (if active)
- Any active fault codes

Menu items will appear in rotation as follows:

- Each item is ON for 2 seconds
- OFF for 1 second
- Then to the next item

Example of Menu Navigation & Option Change
This is an example for how to use the push buttons to make a change to the constant fan speed.

1. When looking at the Furnace Control, the three 7 Segment displays (located just above the push buttons) will be displaying system status. System status includes the current modes of operation, airflow and any active error codes.

SYSTEM OPERATION

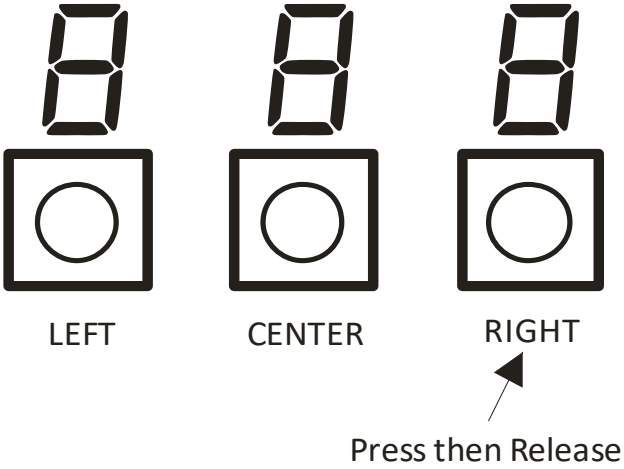

2. Press and release the Right Button (This will cycle through the menus in one direction). Pressing the Left Button would cycle through the menus in the opposite direction. For this example, the right button will be used).
3. The screen will now display Menu L6F (Last 6 Faults). Continue pressing and releasing the Right Button until you see FSd which is the menu for Constant Fan Multiplier. Before reaching the FSd menu you will scroll through Menus L6F, Lm, Cr, Sr and rFd.

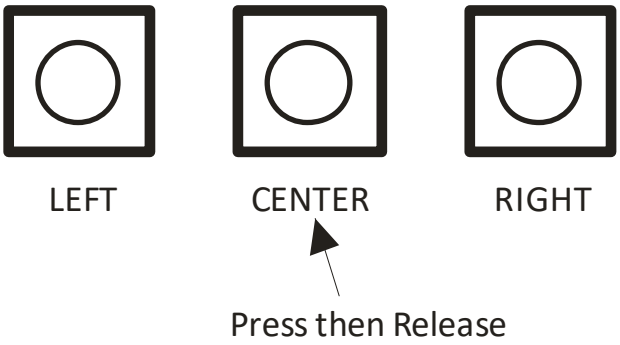

4. Press and release the Center Button. The center button is used to enter menus and make selections within menus.
5. What will be displayed is the currently selected fan only percentage. For this example the assumption is that this currently selected fan only percentage is 25% and changing this to 45% is the objective.
6. Press and Release the Right button. The screen will change to 35 and start flashing. The flashing indicates the displayed option has not been selected yet.
7. Press and Release the Right button again. The 7 segment displays will continue flashing but will now display 45.

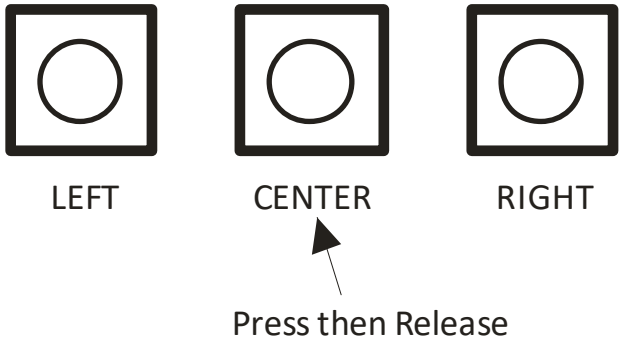

1. **Press and Release the Center Button again. The 45 being displayed will stop flashing. To then complete the selection process and make 45 the official fan only setting Press and Release the Center Button for the last time. This final step will jump the user back to the main menu list and FSd will be displayed again.**
2. **The constant fan multiplier has now been changed from 25 to 45**

<u>Airflow Display</u>

When the blower is running the CFM will be displayed in Status Menu. The first 7 segment character will display "A". The second & third characters will display the actual CFM divided by 100. The actual CFM will display rounded up or down to the nearest 100 CFM as follows;

- **550 to 649 CFM display as "**A06**"**
- **1150 to 1249 CFM display as "**A12**"**

<u>Alarm Display</u>

If an active alarm is present, the alarm code shall be reported in Status Menu starting with "E" and following with the appropriate two digit alarm code.

<u>Clearing Faults</u>

While in the Last 6 Faults option menu, push & hold the center button for 5 seconds. This will clear all non-active alarm(s) in the Last 6 Faults menu. The display will flash three times to confirm faults have been cleared.

<u>Learn Menu</u>

Using this option resets the communicating network which will cause the furnace to discover what devices are present on ClimateTalk™ network. This menu will not appear when the furnace control is connected to a Non-Comm OD unit.

<u>Code Release Number Menu</u>

This is a reference only menu to display the firmware release revision numbers for each micro-controller.

SYSTEM OPERATION

Constant Fan Speed Menu

This menu allows for adjustment of the multiplier for constant fan operation in 10% increments. Each furnace has a "Maximum CFM" determined by motor HP. All fan operations are based off of multipliers which are percentages of this number. Max CFM is shown below. The default constant fan multiplier is 25%.

Model	Max CFM
3 Ton Models	1400
4 Ton Models	1760
5 Ton Models	2200

NOTE: *MVM970803 max CFM is 1650

Gas Heat Airflow Multiplier Menu

The menu is used to change the gas heat airflow multiplier for gas heat operation. In most cases the default gas heat airflow will provide a temperature rise near the middle of the acceptable range. The multiplier will be expressed by the 2nd & 3rd characters of the display as a percentage of max CFM.

Gas Heat Fan Off Delay Menu

The default setting is 90 seconds. The available adjustment range is from 30 to 180 seconds in 30 second increments.

Gas Heat Fan On Delay Menu

The default setting is 30 seconds. The available adjustment range is from 5 to 30 seconds in 5 second increments.

Gas Heat Trim Factor Option Menu

Gas Heat airflow may be trimmed from -10% to +10% in 2% increments.

Gas Heat Stage Multiplier Menu (CFM)

This menu allows adjustment of the low fire CFM multiplier. The default CFM for low fire is 70% of high fire.

Gas Pressure Test Menu

This menu allows 100% firing rate be locked in to check gas valve pressure.

STARTUP PROCEDURE & ADJUSTMENT

Furnace must have a 115 VAC power supply properly connected and grounded. Proper polarity must be maintained for correct operation. In addition to the following start-up and adjustment items, refer to further information in *Operational Checks* section.

DRAIN TRAP PRIMING

The drain trap MUST be primed prior to furnace startup. To prime, fill both sides of the drain trap with water. This ensures proper furnace drainage upon startup and prohibits the possibility of flue gases escaping through the drain system.

FURNACE OPERATION

Purge gas lines of air prior to startup. Be sure not purge lines into an enclosed burner compartment. Follow NFPA 54, National Fuel Gas Code for proper purging methods. In Canada, follow approved purging methods in CAN/CSA B149.1-15.

Check for leaks using an approved chloride-free soap and water solution, an electronic combustible gas detector, or other approved method. Verify that all required kits (propane gas, high altitude, etc.) have been appropriately installed.

FURNACE STARTUP

1. Close the manual gas shutoff valve external to the furnace.
2. Turn off the electrical power to the furnace.
3. Set the room thermostat to the lowest possible setting.
4. Remove the burner compartment door.

NOTE: This furnace is equipped with an ignition device which automatically lights the burner. Do not try to light the burner by hand.

5. Move the furnace gas valve manual control to the OFF position.
6. Wait five minutes then smell for gas. Be sure check near the floor as some types of gas are heavier than air.
7. If you smell gas after five minutes, immediately follow the safety instructions in the *Safety Considerations* on page 3 of this manual. If you do not smell gas after five minutes, move the furnace gas valve manual control to the ON position.
8. Replace the burner compartment door.
9. Open the manual gas shutoff valve external to the furnace.
10. Turn on the electrical power to the furnace.
11. Adjust the thermostat to a setting above room temperature.
12. After the burners are lit, set the thermostat to desired temperature.

FURNACE SHUTDOWN

1. Set the thermostat to the lowest setting.

   The integrated control will close the gas valve and extinguish flame. Following a 15 second delay, the induced draft blower will be de-energized. After the blower off delay time expires, the blower de-energizes.
2. Remove the burner compartment door and move the furnace gas valve manual control to the OFF position.
3. Close the manual gas shutoff valve external to the furnace.
4. Replace the burner compartment door.

SYSTEM OPERATION

GAS SUPPLY PRESSURE MEASUREMENT

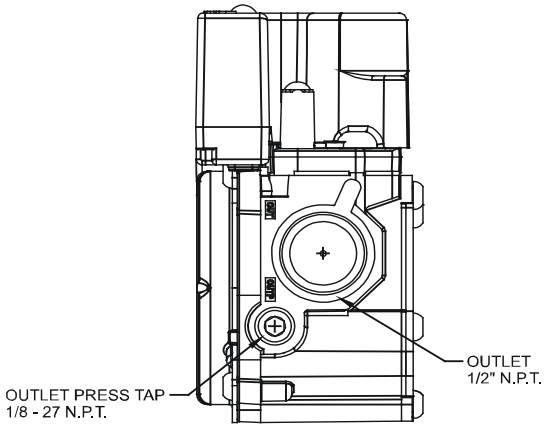

Figure 46A

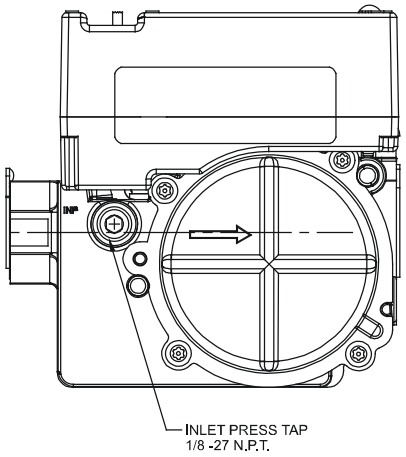

Figure 46B

INLET GAS SUPPLY PRESSURE		
Natural Gas	Minimum: 4.5" w.c.	Maximum: 10.0" w.c.
Propane Gas	Minimum: 11.0" w.c.	Maximum: 13.0" w.c.

⚠ CAUTION

TO PREVENT UNRELIABLE OPERATION OR EQUIPMENT DAMAGE, THE INLET GAS SUPPLY PRESSURE MUST BE AS SPECIFIED ON THE UNIT RATING PLATE WITH ALL OTHER HOUSEHOLD GAS FIRED APPLIANCES OPERATING.

The line pressure supplied to the gas valve must be within the range specified below. The supply pressure can be measured at the gas valve inlet pressure tap or at a hose fitting installed in the gas piping drip leg. The supply pressure must be measured with the burners operating. To measure the gas supply pressure, use the following procedure.

1. Turn OFF gas to furnace at the manual gas shutoff valve external to the furnace.
2. Connect a calibrated manometer (or appropriate gas pressure gauge) at either the gas valve inlet pressure tap or the gas piping drip leg. See White-Rodgers 36J54 gas valve figure for location of inlet pressure tap
3. Turn ON the gas supply and operate the furnace and all other gas consuming appliances on the same gas supply line.
4. Measure furnace gas supply pressure with burners firing. Supply pressure must be within the range specified in the *Inlet Gas Supply Pressure* table.

If supply pressure differs from table, make the necessary adjustments to pressure regulator, gas piping size, etc., and/or consult with local gas utility.

5. Turn OFF gas to furnace at the manual shutoff valve and disconnect manometer. Reinstall plug before turning on gas to furnace.
6. Turn OFF any unnecessary gas appliances stated in step 3.

GAS MANIFOLD PRESSURE MEASUREMENT AND ADJUSTMENT

⚠ CAUTION

TO PREVENT UNRELIABLE OPERATION OR EQUIPMENT DAMAGE, THE GAS MANIFOLD PRESSURE MUST BE AS SPECIFIED ON THE UNIT RATING PLATE. ONLY MINOR ADJUSTMENTS SHOULD BE MADE BY ADJUSTING THE GAS VALVE PRESSURE REGULATOR.

Only small variations in gas pressure should be made by adjusting the gas valve pressure regulator. The manifold pressure must be measured with the burners operating. To measure and adjust the manifold pressure, use the following procedure.

1. Turn OFF gas to furnace at the manual gas shutoff valve external to the furnace.
2. Turn off all electrical power to the system.
3. Outlet pressure tap connections:

   White-Rodgers 36J27 valve: Remove 1/8” N.P.T. plug using 5/16” Allen wrench & connect proper adapter for manometer connection.
4. Attach a hose and manometer to outlet pressure tap.
5. Turn ON the gas supply.
6. Turn on power and close thermostat “R” and “W1”contacts to provide a call for heat.
7. Measure the gas manifold pressure with burners firing. Adjust manifold pressure.
8. Use the modulation adjustment screw on the gas valve and turn clockwise one click using a pocket screwdriver to increase gas flow. Allow the gas flow to adjust approximately 15 seconds before moving the adjustment screw again. Turn the modulation adjustment screw counterclockwise with a pocket screwdriver to decrease gas flow if this adjustment is needed. Allow the gas flow to adjust approximately 15 seconds before moving the adjustment screw again. These changes should only be done to fine tune the gas flow.
9. Turn off all electrical power and gas supply to the system.

10. Remove the manometer hose and adapter from gas valve.
11. Install 1/8” N.P.T. plug using 5/16” Allen wrench.
12. Turn on electrical and gas supply to the furnace.

Follow this procedure to test the gas valve pressure at 100% firing rate.

RUN HIGH FIRE

It is recommended that the CoolCloud phone application be used for all functional tests. If a manual test is preferred there are two methods available.

Method 1 (Temporary Test):

1. **Using the on board push buttons, enter the Gas Pressure Test menu (7 segment display “gPt”) and select YES to enable the Gas Pressure Test. The system will operate in high fire for 5 minutes or until the test is terminated by pressing any of the 3 on board push buttons.**

Method 2 (Longer Term Test):

1. **Turn off the furnace**
2. **If installing a communicating fossil fuel system, make sure the 1, 2, R, C terminal is either removed or there are no wires connected.**
3. **Provide power to the furnace**
4. **Provide a thermostat W call. The system will continuously run at 100% firing rate.**
5. **When test is complete, remove the W (heat) call to the furnace. The system will shut down.**

Run Low Fire

1. **Turn off the furnace**
2. **If installing a communicating fossil fuel system, make sure the 1, 2, R, C terminal is either removed or there are no wires connected.**
3. **Provide power to the furnace**
4. **Provide a thermostat W call and allow furnace to begin its ignition sequence**
5. **Remove thermostat W call and allow furnace to enter idle state (7 segment display IdL)**
6. **Provide the thermostat W call again. The furnace will now operate in low stage for greater than 5 minutes (assuming the target runtime has been set to something greater than 10 minutes).**
7. **When test is complete, remove the W (heat) call to the furnace. The system will shut down.**

NOTE: When converting from natural gas to L.P. consult your distributor for proper conversion kit.

Manifold Gas Pressure			
Gas Type	**Gas Input**	**Nominal**	**Range**
Natural	50%	.9" w.c.	.6"w.c. - 3.8"w.c.
	100%	3.5" w.c.	
Propane	50%	2.5" w.c.	2.2"w.c. - 10.3"w.c.
	100%	10.0" w.c.	

TEMPERATURE RISE

Temperature rise must be within the range specified on the unit rating plate. An incorrect temperature rise may result in condensing in or overheating of the heat exchanger. An airflow and temperature rise table is provided in the Specification Sheet applicable to your model. Determine and adjust temperature rise as follows:

1. Operate furnace with burners firing for approximately ten minutes. Ensure all registers are open and all duct dampers are in their final (fully or partially open) position.
2. Place thermometers in the return and supply ducts as close to the furnace as possible. Thermometers must not be influenced by radiant heat by being able to “see” the heat exchanger.
3. Subtract the return air temperature from the supply air temperature to determine the air temperature rise. Allow adequate time for thermometer readings to stabilize.
4. Adjust temperature rise by adjusting the circulator blower speed. Increase blower speed to reduce temperature rise. Decrease blower speed to increase temperature rise. Refer to *Startup Procedure and Adjustment - Circulator Blower Speeds* for speed changing details.

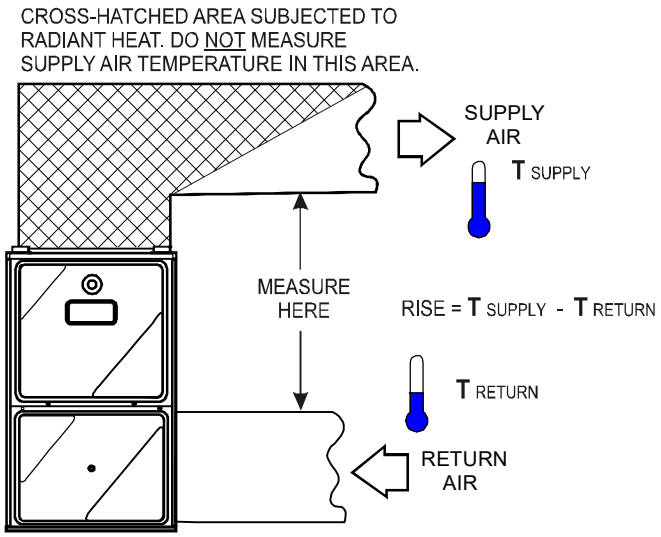

Temperature Rise Measurement

Figure 49

DIAGNOSTICS

Accessing the furnace’s diagnostic menu provides access to the last six faults detected by the furnace. Faults are stored most recent to least recent, Any consecutively repeated fault is stored a maximum of three times. Example: A clogged return air filter causes the furnace limit to trip repeatedly. The control will only store this fault the first three consecutive times the fault occurs. Navigate to the diagnostics menu as described above in the thermostat installation manual.

NOTE: It is highly recommended that the fault history be cleared when performing maintenance or servicing the furnace.

SYSTEM OPERATION

NORMAL SEQUENCE OF OPERATION

POWER UP

The normal power up sequence is as follows:

- 115 VAC power applied to furnace.
- Integrated control module performs internal checks.
- Integrated control module monitors safety circuits continuously.
- Furnace awaits call from thermostat. 7-segment LED's display LdL while awaiting call from thermostat.

HEATING MODE

NOTE: Upon power up, the gas valve stepper motor may activate to change position. During this event, a slight clicking sound from the stepper motor may be heard. This clicking sound is inherent to the stepper motor calibration and does not indicate a problem.

The normal operational sequence in heating mode is as follows:

- W thermostat contact closes, initiating a call for heat.
- Integrated control module performs safety circuit checks.
- Induced draft blower is energized on high speed for a 15-second prepurge.
- Induced draft blower steps to low speed following prepurge. Low stage pressure switch contacts are closed. Igniter warm up begins upon Inducer draft blower step to low speed and presence of closed low stage pressure switch contacts.
- Gas valve opens at end of igniter warm up period, delivering gas to burners and establishing flame.
- Low stage gas flow on Modulating product is 50% flow rate.
- Integrated control module monitors flame presence. Gas valve will remain open only if flame is detected.
- Based on the furnace internal control algorithms the gas valve and induced draft blower will modulate to provide the correct gas input needed. After a power cycle, the first gas heat call will result in high stage operation.
- Circulator blower is energized on heat speed following the selected blower on delay and will begin to ramp up. Electronic air cleaner terminal is energized with circulator blower.
- Furnace is now operating on the specified stage determined by the internal control algorithm.
- Furnace runs, integrated control module monitors safety circuits continuously.
- The W terminal thermostat contacts open, which ends the call for heat.
- The gas valve closes, extinguishing the flame.
- Induced draft blower is de-energized following a 15 second post purge.
- Circulator blower continues running for the selected heat off delay period.
- Circulator blower and electronic air cleaner terminal are de-energized.
- Circulator blower shuts off after the heat off delay period expires.
- Furnace awaits next call from thermostat.

OPERATIONAL CHECKS

The burner flames should be inspected with the burner compartment door installed. Flames should be stable, quiet, soft, and blue (dust may cause orange tips but they must not be yellow). Flames should extend directly outward from the burners without curling, floating, or lifting off. Flames must not impinge on the sides of the heat exchanger firing tubes.

SAFETY CIRCUIT DESCRIPTION

WARNING
DO NOT BYPASS SAFETY DEVICES

A number of safety circuits are employed to ensure safe and proper furnace operation. These circuits serve to control any potential safety hazards and serve as inputs in the monitoring and diagnosis of abnormal function. These circuits are continuously monitored during furnace operation by the integrated control module.

INTEGRATED CONTROL MODULE

The integrated control module is an electronic device which, if a potential safety concern is detected, will take the necessary precautions and provide diagnostic information through an LED.

PRIMARY LIMIT

The primary limit control is located on the partition panel and monitors heat exchanger compartment temperatures. It is a normally-closed (electrically), automatic reset, temperature-activated sensor. The limit guards against overheating as a result of insufficient conditioned air passing over the heat exchanger.

AUXILIARY LIMIT

The auxiliary limit controls are located on or near the circulator blower and monitors blower compartment temperatures. They are a normally-closed (electrically), manual-reset sensors. These limits guard against overheating as a result of insufficient conditioned air passing over the heat exchanger.

ROLLOUT LIMIT

The rollout limit controls are mounted on the burner/manifold assembly and monitor the burner flame. They are normally-closed (electrically), manual-reset sensors. These limits guard against burner flames not being properly drawn into the heat exchanger.

SYSTEM OPERATION

PRESSURE SWITCHES

The pressure switches are normally-open (closed during operation) negative air pressure-activated switches. They monitor the airflow (combustion air and flue products) through the heat exchanger via pressure taps located on the induced draft blower and the coil front cover. These switches guard against insufficient airflow (combustion air and flue products) through the heat exchanger and/or blocked condensate drain conditions.

FLAME SENSOR

The flame sensor is a probe mounted to the burner/manifold assembly which uses the principle of flame rectification to determine the presence or absence of flame.

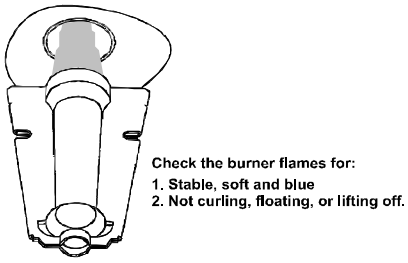

Burner Flame

Figure 57

TROUBLESHOOTING

ELECTROSTATIC DISCHARGE (ESD) PRECAUTIONS

NOTE: Discharge body's static electricity before touching unit. An electrostatic discharge can adversely affect electrical components.

Use the following precautions during furnace installation and servicing to protect the integrated control module from damage. By putting the furnace, the control, and the person at the same electrostatic potential, these steps will help avoid exposing the integrated control module to electrostatic discharge. This procedure is applicable to both installed and uninstalled (ungrounded) furnaces.

1. Disconnect all power to the furnace. Do not touch the integrated control module or any wire connected to the control prior to discharging your body's electrostatic charge to ground.
2. Firmly touch a clean, unpainted, metal surface of the furnace away from the control. Any tools held in a person's hand during grounding will be discharged.
3. Service integrated control module or connecting wiring following the discharge process in step 2. Use caution not to recharge your body with static electricity; (i.e., do not move or shuffle your feet, do not touch ungrounded objects, etc.). If you come in contact with an ungrounded object, repeat step 2 before touching control or wires.
4. Discharge your body to ground before removing a new control from its container. Follow steps 1 through 3 if installing the control on a furnace. Return any old or new controls to their containers before touching any ungrounded object.

DIAGNOSTIC CHART

⚠ WARNING

HIGH VOLTAGE !

TO AVOID PERSONAL INJURY OR DEATH DUE TO ELECTRICAL SHOCK, DISCONNECT ELECTRICAL POWER BEFORE PERFORMING ANY SERVICE OR MAINTENANCE.



Refer to the *Troubleshooting Chart* in the back of this manual for assistance in determining the source of unit operational problems. The 7-segment LED displays will display an error code that may contain a letter and number. The error code may be used to assist in troubleshooting the unit.

RESETTING FROM LOCKOUT

Furnace lockout results when a furnace is unable to achieve ignition after three attempts during a single call for heat. It is characterized by a non-functioning furnace and an E60 code displayed on the 7-segment display. If the furnace is in "lockout", it will (or can be) reset in any of the following ways.

1. Automatic reset. The integrated control module will automatically reset itself and attempt to resume normal operations following a one hour lockout period.
2. Manual power interruption. Interrupt 115 volt power to the furnace.
3. Manual thermostat cycle. Lower the thermostat so that there is no longer a call for heat for 1 -20 seconds then reset to previous setting.

NOTE: If the condition which originally caused the lockout still exists, the control will return to lockout. Refer to the *Troubleshooting Chart* for aid in determining the cause.

SCHEDULED MAINTENANCE

MAINTENANCE

ANNUAL INSPECTION

WARNING

To avoid electrical shock, injury or death, disconnect electrical power before performing any maintenance. If you must handle the igniter, handle with care. Touching the igniter element with bare fingers, rough handling or vibration could damage the igniter resulting in premature failure. Only a qualified servicer should ever handle the igniter.



The furnace should be inspected by a qualified installer, or service agency at least once per year. This check should be performed at the beginning of the heating season. This will ensure that all furnace components are in proper working order and that the heating system functions appropriately. Pay particular attention to the following items. Repair or service as necessary.

- Flue pipe system. Check for blockage and/or leakage. Check the outside termination and the connections at and internal to the furnace.
- Heat exchanger. Check for corrosion and/or buildup within the heat exchanger passageways.
- Burners. Check for proper ignition, burner flame, and flame sense.
- Drainage system. Check for blockage and/or leakage. Check hose connections at and internal to furnace.
- Wiring. Check electrical connections for tightness and/or corrosion. Check wires for damage.
- Filters.

FILTERS

FILTER MAINTENANCE

Improper filter maintenance is the most common cause of inadequate heating or cooling performance. Filters should be cleaned (permanent) or replaced (disposable) every two months or as required. When replacing a filter, it must be replaced with a filter of the same type and size.

FILTER REMOVAL

Depending on the installation, differing filter arrangements can be applied. Filters can be installed in either the central return register or a side panel external filter rack (upflow only). A media air filter or electronic air cleaner can be used as an alternate filter. Follow the filter sizes given in the Recommended Minimum Filter size table to ensure proper unit performance.
To remove filters from an external filter rack in an upright upflow installation, follow the directions provided with external filter rack kit.

Horizontal Unit Filter Removal

Filters in horizontal installations are located in the central return register or the ductwork near the furnace.

To remove:

1. Turn OFF electrical power to furnace.
2. Remove filter(s) from the central return register or ductwork.
3. Replace filter(s) by reversing the procedure for removal.
4. Turn ON electrical power to furnace.

Media Air Filter or Electronic Air Cleaner Removal

Follow the manufacturer's directions for service.

BURNERS

Visually inspect the burner flames periodically during the heating season. Turn on the furnace at the thermostat and allow several minutes for flames to stabilize, since any dislodged dust will alter the flames normal appearance. Flames should be stable, quiet, soft, and blue (dust may cause orange tips but they must not be yellow). They should extend directly outward from the burners without curling, floating, or lifting off. Flames must not impinge on the sides of the heat exchanger firing tubes.

INDUCED DRAFT AND CIRCULATOR BLOWERS

CAUTION

To ensure proper unit performance, adhere to the filter sizes given in the recommended Minimum Filter Size Table or Specification Sheet applicable to your model.

The bearings in the induced draft blower and circulator blower motors are permanently lubricated by the manufacturer. No further lubrication is required. Check motor windings for accumulation of dust which may cause overheating. Clean as necessary.

CONDENSATE TRAP AND DRAIN SYSTEM (QUALIFIED SERVICER ONLY)

Annually inspect the drain tubes, drain trap, and field-supplied drain line for proper condensate drainage. Check drain system for hose connection tightness, blockage, and leaks. Clean or repair as necessary.

FLAME SENSOR (QUALIFIED SERVICER ONLY)

Under some conditions, the fuel or air supply can create a nearly invisible coating on the flame sensor. This coating acts as an insulator causing a drop in the flame sense signal. If the flame sense signal drops too low the furnace will not sense flame and will lock out. The flame sensor should be carefully cleaned by a qualified servicer using emery cloth or steel wool. Following cleaning, the flame sense signal should be as indicated in the Specifications Sheet.

SCHEDULED MAINTENANCE

FLUE PASSAGES (QUALIFIED SERVICER ONLY)

The heat exchanger flue passageways should be inspected at the beginning of each heating season.

Before Leaving an Installation

- Cycle the furnace with the thermostat at least three times. Verify cooling and fan only operation.
- Review the Owner's Manual with the homeowner and discuss proper furnace operation and maintenance.
- Leave literature packet near furnace.

Repair and Replacement Parts

- When ordering any of the listed functional parts, be sure to provide the furnace model, manufacturing, and serial numbers with the order.
- Although only functional parts are shown in the parts list, all sheet metal parts, doors, etc. may be ordered by description.
- Parts are available from your distributor.

Functional Parts List-

Gas Valve	Blower Motor
Gas Manifold	Blower Wheel
Natural Gas Orifice	Blower Mounting Bracket
Propane Gas Orifice	Blower Cutoff
Igniter	Blower Housing
Flame Sensor	Inductor
Rollout Limit Switch	Heat Exchanger with
Primary Limit Switch	Recuperator Coil
Auxiliary Limit Switch	Coil Front Cover
Pressure Switch	Integrated Control Module
Induced Draft Blower	Transformer
Door Switch	Bluetooth Module

⚠ WARNING

HIGH VOLTAGE

DISCONNECT ALL POWER BEFORE SERVICING OR INSTALLING THIS UNIT. MULTIPLE POWER SOURCES MAY BE PRESENT. FAILURE TO DO SO MAY CAUSE PROPERTY DAMAGE, PERSONAL INJURY OR DEATH.

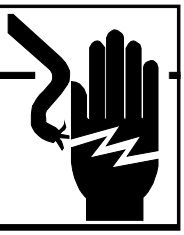

⚠ CAUTION

IF YOU MUST HANDLE THE ITNITOR, HANDLE WITH CARE. TOUCHING THE IGNITOR BODY WITH BARE FINGERS, ROUGH HANDLING, OR VIBRATION COULD RESULT IN EARLY IGNITOR FAILURE. ONLY A QUALIFIED SERVICER SHOULD EVER HANDLE THE IGNITOR.

ANNUAL INSPECTION

The furnace should be inspected by a qualified installer, or service agency at least once per year. This check should be performed at the beginning of the heating season. This will ensure that all furnace components are in proper working order and that the heating system functions appropriately. Pay particular attention to the following items. Repair or service as necessary.

- Flue pipe system. Check for blockage and/or leakage. Check the outside termination and the connections at the furnace.
- Combustion air intake pipe system (where applicable). Check for blockage and/or leakage. Check the outside termination and the connection at the furnace.
- Heat exchanger. Check for corrosion and/or buildup within the heat exchanger passageways.
- Burners. Check for proper ignition, burner flame, and flame sense.
- Drainage system. Check for blockage and/or leakage. Check hose connections at and internal to furnace.
- Wiring. Check electrical connections for tightness and/or corrosion. Check wires for damage.
- Filters.

AIR FILTER

⚠ WARNING

NEVER OPERATE FURNACE WIHTOUT A FILTER INSTALLED AS DUST AND LINT WILL BUILD UP ON INTERNAL PARTS RESULTING IN LOSS OF EFFICIENCY, EQUIPMENT DAMAMGE, AND POSSIBLE FIRE.

Filters must be used with this furnace. Filters do not ship with these furnaces but must be provided by the installer for proper furnace operation.

Remember that dirty filters are the most common cause of inadequate heating or cooling performance.

⚠ WARNING

HIGH VOLTAGE

DISCONNECT ALL POWER BEFORE SERVICING, REMOVING THE FILTER OR PREFORING ANY OTHER MAINTENEACE. MULTIPLE POWER SOURCES MAY BE PRESENT. FAILURE TO DO SO MAY CAUSE PROPERTY DAMAGE, PERSONAL INJURY OR DEATH.



MAINTENANCE

Improper filter maintenance is the most common cause of inadequate heating or cooling performance. Filters should be cleaned (permanent) or replaced (disposable) every two months or as required. It is the owner's responsibility to keep air filters clean. When replacing a filter, it must be replaced with a filter of the same type and size.

SCHEDULED MAINTENANCE

FILTER REMOVAL

Depending on the installation, differing filter arrangements can be applied. Filters can be installed in the central return register, the bottom of the blower compartment (upflow only), a side panel external filter rack kit (upflow only), or the ductwork above a counterflow furnace. A media air filter or electronic air cleaner can be used as an alternate filter. The filter sizes given in the *Product Design* section of this manual or the product *Specification Sheet* must be followed to ensure proper unit performance. Refer to the following information for removal and installation of filters.

FILTER REMOVAL PROCEDURE

MEDIA AIR FILTER OR ELECTRONIC AIR CLEANER REMOVAL

Follow the manufacturer's directions for service.

UPRIGHT COUNTERFLOW FILTER REMOVAL

To remove filters from the ductwork above an upright counterflow installation:

1. Turn off electrical power to furnace.
2. Remove access door in ductwork above furnace.
3. Remove filters.
4. Remove blower compartment door. Vacuum compartment. Replace blower compartment door.
5. Replace filters opposite of removal.
6. Replace access door in ductwork.

HORIZONTAL UNIT FILTER REMOVAL

Filters in horizontal installations are located in the central return register.

INDUCED DRAFT AND CIRCULATION BLOWERS

The bearings in the induced draft blower and circulator blower motors are permanently lubricated by the manufacturer. No further lubrication is required. Check motor windings for accumulation of dust which may cause overheating. Clean as necessary.

CONDENSATE DRAINAGE SYSTEM (QUALIFIED SERVICER ONLY)

The drain tubes, trap, and field supplied drain line must be checked annually and cleaned as often as necessary to ensure proper condensate drainage.

FLAME SENSOR (QUALIFIED SERVICER ONLY)

Under some conditions, the fuel or air supply can create a nearly invisible coating on the flame sensor. This coating acts as an insulator, causing a drop in the flame sensing signal. If this occurs, a qualified servicer must carefully clean the flame sensor with steel wool. After cleaning, the flame sensor output should be as listed on the specification sheet.

BURNERS

⚠ WARNING

HIGH VOLTAGE

ELECTRICAL COMPONENTS ARE CONTAINED IN BOTH COMPARTMENTS. TO AVOID ELECTRICAL SHOCK, INJURY OR DEATH, DO NOT REMOVE ANY INTERNAL COMPARTMENT COVERS OR ATTEMPT ANY ADJUSTMENT. CONTACT A QUALIFIED SERVICE AGENT AT ONCE IF AN ABNORMAL FLAME APPEARANCE SHOULD DEVELOP.

Periodically during the heating season make a visual check of the burner flames. Turn the furnace on at the thermostat. Wait a few minutes since any dislodged dust will alter the normal flame appearance. Flames should be stable, quiet, soft and blue with slightly orange tips. They should not be yellow. They should extend directly outward from the burner ports without curling downward, floating or lifting off the ports.

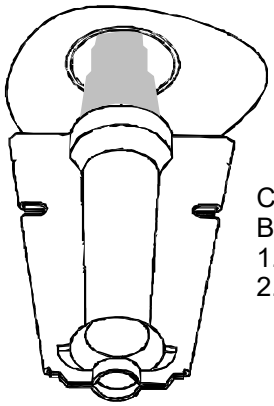

Check the
Burner Flames for:
1. Stable, soft and blue.
2. Not curling, floating or lifting off.

Burner Flame

Proper equipment promotes faster, more efficient service and accurate repairs resulting in fewer call backs.

HEATING PERFORMANCE TEST

Before attempting to diagnose an operating fault, run a heating performance test and apply the results to the *Service Problem Analysis Guide.*

To conduct a heating performance test, the BTU input to the furnace must be calculated.

After the heating cycle has been in operation for at least fifteen minutes and with all other gas appliances turned off, the gas meter should be clocked.

To find the BTU input, multiply the number of cubic feet of gas consumed per hour by the heating value of the gas being used. (The calorific value of the gas being used is found by contacting your local utility.)

EXAMPLE: It is found by the gas meter, that it takes forty (40) seconds for the hand on the cubic foot dial to make one complete revolution, with all appliances off, except the furnace. Take this information and locate it on the gas rate chart. Observe the forty (40) seconds, locate and read across to the one (1) cubic foot dial column. There we find the number 90, which shows that ninety (90) cubic feet of gas will be consumed in one (1) hour.

SCHEDULED MAINTENANCE

Let's assume the local gas utility has stated that the calorific value of the gas is 1,025 BTU per cubic foot.

Multiplying the ninety (90) cubic feet by 1,025 BTU per cubic foot gives us an input of 92,250 BTUH.

Checking the BTU input on the rating plate of the furnace being tested.

EXAMPLE:

INPUT: 92,000 BTU/HR

OUTPUT CAP: 84,000

⚠ CAUTION

ALWAYS CONNECT A MONOMETER TO THE OUTLET TAP AT THE GAS VALVE BEFORE ADJUSTING THE PRESSURE REGULATOR. IN NO CASE SHOULD THE FINAL MANIFOLD PRESSURE VARY MORE THAN PLUS OR MINUS .3 INCHES WATER COLUMN FROM 3.5 INCHES WATER COLUMN FOR NATURAL GAS OR 10 INCHES WATER COLUMN FOR PROPANE GAS.

To adjust the pressure regulator on the gas valve, turn down (clockwise) to increase pressure and input, and out (counterclockwise) to decrease pressure and input.

The dissipation of the heat transferred to the heat exchanger is now controlled by the amount of air circulated over its surface.

The amount (CFM) of air circulated is governed by the external static pressure in inches of water column of duct work, cooling coil, registers, etc., applied externally to the unit versus the motor speed tap (direct drive) or pulley adjustments of the motor and blower (belt drive).

A properly operating unit must have the BTU per hour input and CFM of air, within the limits shown to prevent short cycling of the equipment. As the external static pressure goes up, the temperature rise will also increase. Consult the proper tables for temperature rise limitation.

SCHEDULED MAINTENANCE

CLOCKING A GAS METER

1. Turn off all gas appliances in the home.
2. Turn on the furnace. Ensure the furnace is operating at 100% firing rate on 2 stage and modulating furnace product.
3. Once heating cycle is at a steady state (typically 15 minutes of operation), use a stopwatch to time how long it takes the smallest unit of measure dial on the gas meter to make a full revolution. In Table 1, one cubic foot is selected. The smallest unit of measure will vary depending on the gas meter.

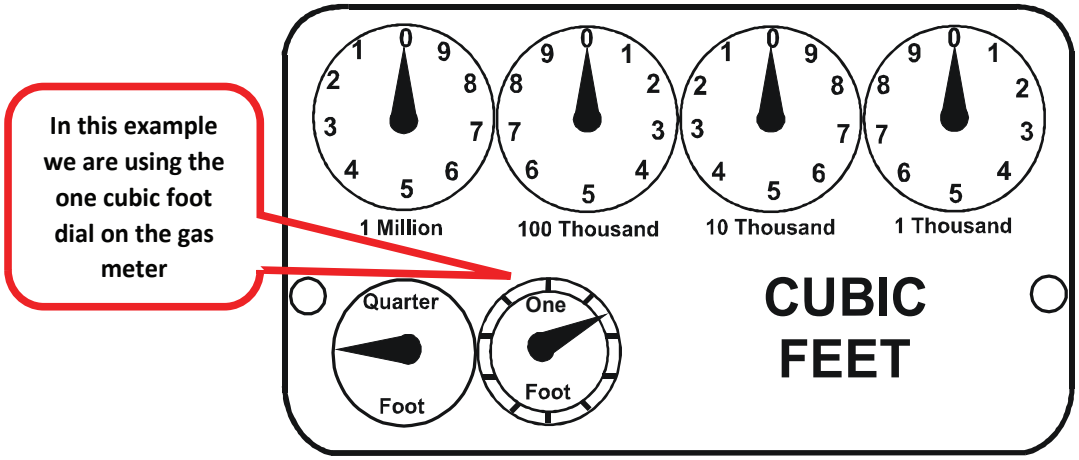

Table 1

4. Using Table 2 below, find the number of seconds it took for the dial to make a full revolution. To the right of that number of seconds and below the Size of Test Dial (selected in step 3 and shown in Table 1) will be the Cubic Feet per Hour (CFH).

Locate 40 seconds for one revolution in the chart below

Then locate the 1 cu ft dial column and select the corresponding CFH from the 40 seconds for one revolution row

GAS RATE -- CUBIC FEET PER HOUR

Seconds for One Revolution	Size of Test Dial					Seconds for One Revolution	Size of Test Dial				
	1/4 cu/ft	1/2 cu/ft	1 cu/ft	2 cu/ft	5 cu/ft		1/4 cu/ft	1/2 cu/ft	1 cu/ft	2 cu/ft	5 cu/ft
10	90	180	360	720	1800	36	25	50	100	200	500
11	82	164	327	655	1636	37	--	--	97	195	486
12	75	150	300	600	1500	38	23	47	95	189	474
13	69	138	277	555	1385	39	--	--	92	185	462
14	64	129	257	514	1286	40	22	45	90	180	450
15	60	120	240	480	1200	41	--	--		176	439
16	56	113	225	450	1125	42	21	43	86	172	429
17	53	106	212	424	1059	43	--	--	--	167	419
18	50	100	200	400	1000	44	--	41	82	164	409
19	47	95	189	379	947	45	20	40	80	160	400
20	45	90	180	360	900	46	--	--	78	157	391
21	43	86	171	343	857	47	19	38	76	153	383
22	41	82	164	327	818	48	--	--	75	150	375
23	39	78	157	313	783	49	--	--	--	147	367
24	37	75	150	300	750	50	18	36	72	144	360
25	36	72	144	288	720	51	--	--	--	141	355
26	34	69	138	277	692	52	--	--	69	138	346
27	33	67	133	265	667	53	17	34	--	136	340
28	32	64	129	257	643	54	--	--	67	133	333
29	31	62	124	248	621	55	--	--	--	131	327
30	30	60	120	240	600	56	16	32	64	129	321
31	--	--	116	232	581	57	--	--	--	126	316
32	28	56	113	225	563	58	--	31	62	124	310
33	--	--	109	218	545	59	--	--	--	122	305
34	26	53	106	212	529	60	15	30	60	120	300
35	--	--	103	206	514						

Table 2

SCHEDULED MAINTENANCE

5. Use this formula to verify the Cubic Feet per Hour (CFH) input determined in step 4 is correct:

(3600 x Gas Meter Dial Size) / Time (seconds) = Cubic Feet per Hour (CFH)

3600 is used as there are 60 seconds in a minute and 60 minutes in an hour. 60x60=3600

6. Check with your local utility for actual BTU content (caloric value) of natural gas in the area (the average is 1025 BTU's).
7. Use this formula to calculate the BTU/HR input (See BTU/HR Calculation Example):

Cubic Feet per Hour (CFH) x BTU content of your natural gas = BTU/HR input

8. Should the figure you calculated not fall within five (5) percent of the nameplate rating of the unit, adjust the gas valve pressure regulator or resize orifices. To adjust the pressure regulator on the gas valve, turn downward (clockwise) to increase pressure and input, and upward (counterclockwise) to decrease pressure and input. A properly operating unit must have the BTU per hour input and CFM of air, within the limits shown to prevent short cycling of the equipment. As the external static pressure goes up, the temperature rise will also increase. Consult the proper tables for temperature rise limitation.

BTU/HR Calculation Example:

The unit being tested takes 40 seconds for the 1 cubic foot dial to make one complete revolution. Using the chart, this translates to 90 cubic feet per hour. Based upon the assumption that one cubic foot of natural gas has 1,025 BTU's (Check with your local utility for actual BTU content), the **calculated input is 92,250 BTU's per hour.**

Furnace Nameplate Input in this example: 90,000 BTU/HR

Calculated Gas Input in this example: 92,250 BTU/HR

This example is within the 5% tolerance input and does not need adjustment.

CAUTION

Always connect a manometer to the outlet tap at the gas valve before adjusting the pressure regulator. In no case should the final manifold pressure vary more than plus or minus .2 inches water column from 3 inches water column for natural gas.

A properly operating unit must have the BTU per hour input and CFM of air, within the limits shown to prevent short cycling of the equipment. As the external static pressure goes up, the temperature rise will also increase. Consult the proper tables for temperature rise limitation.

SERVICING

Some of the electronic boards being used today, with flame rectification, will not function properly and/or at all without polarization of incoming power. Some also require phasing between the primary and secondary sides of step-down transformers.

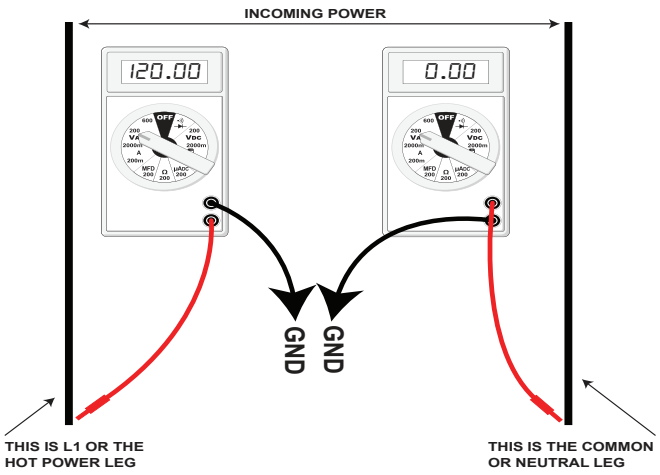

CHECKING FOR PHASING - PRIMARY TO SECONDARY OF UNMARKED TRANSFORMERS*

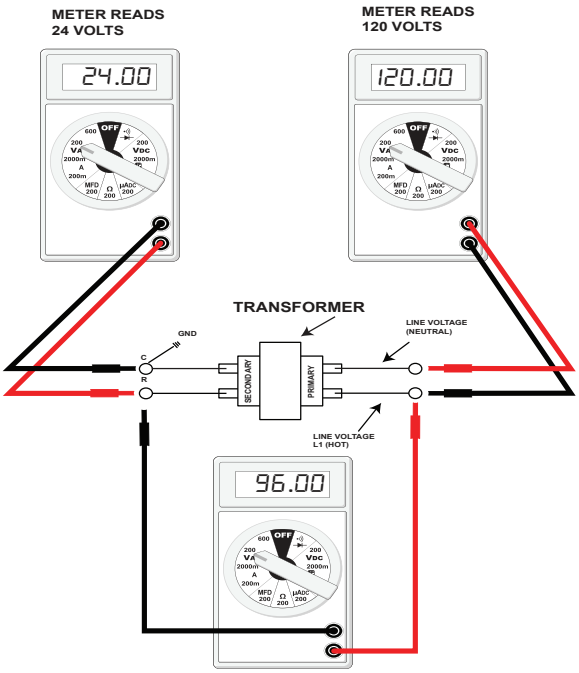

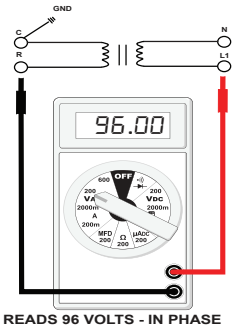

READS 96 VOLTS - IN PHASE

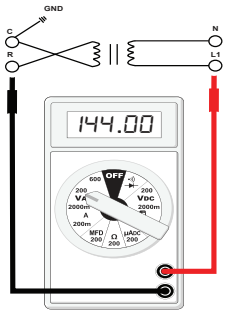

READS 144 VOLTS - OUT OF PHASE

If meter reads approximately 96 volts - the primary to secondary are in phase - if reads approximately 144 volts out of phase - reverse low voltage wires.

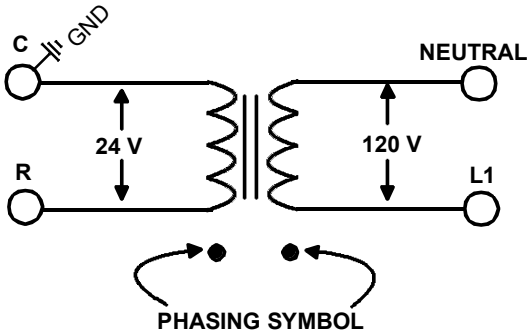

These then should be wired to the furnace accordingly.

Some transformers will display phasing symbols as shown in the illustration to the left to assist in determining proper transformer phasing.

SERVICING

CHECKING VOLTAGE

⚠ WARNING

HIGH VOLTAGE

DISCONNECT ALL POWER BEFORE SERVICING OR CHANGING ANY ELECTRICAL WIRING. MULTIPLE POWER SOURCES MAY BE PRESENT. FAILURE TO DO SO MAY CAUSE PROPERTY DAMAGE, PERSONAL INJURY OR DEATH.

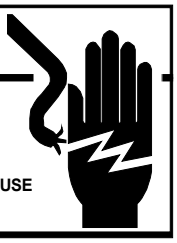

1. Remove the burner door.
2. Remove cover from the Junction Box and gain access to incoming power lines.

With Power ON:

⚠ WARNING

LINE VOLTAGE NOW PRESENT

3. Using a voltmeter, measure the voltage across the hot and neutral connections.

NOTE: To energize the furnace, the Door Interlock Switch must be engaged at this point.

4. No reading - indicates open wiring, open fuse, no power, or faulty Door Interlock Switch from unit to fused disconnect service. Repair as needed.
5. With ample voltage at line voltage connectors, energize the furnace blower motor by jumpering terminals R to G on the integrated ignition control.
6. With the blower motor in operation, the voltage should be 115 volts ± 10 percent.
7. If the reading falls below the minimum voltage, check the line wire size. Long runs of undersized wire can cause low voltage. If wire size is adequate, notify the local power company of the condition.
8. After completing check and/or repair, replace Junction Box cover and reinstall the service panel doors.
9. Turn on electrical power and verify proper unit operation.

CHECKING WIRING

⚠ WARNING

DISCONNECT ALL POWER BEFORE SERVICING.

1. Check wiring visually for signs of overheating, damaged insulation and loose connections.
2. Use an ohmmeter to check continuity of any suspected open wires.
3. If any wires must be replaced, replace with AWM, 105°C. 2/64 thick insulation of the same gauge or its equivalent.

CHECKING THERMOSTAT, WIRING

THERMOSTAT AND WIRING

⚠ WARNING

DISCONNECT ALL POWER BEFORE SERVICING.

1. Remove the blower compartment door to gain access to the thermostat low voltage wires located at the furnace integrated control module terminals.
2. Remove the thermostat low voltage wires at the furnace control panel terminal board.
3. Jumper terminals R to W on the integrated ignition control. With Power On (and Door Interlock Switch closed):

⚠ WARNING

LINE VOLTAGE NOW PRESENT

4. Induced Draft Motor must run and pull in pressure switch.
5. If the hot surface igniter heats and at the end of the igniter warm-up period the gas valve opens and the burners ignite, the trouble is in the thermostat or wiring.
6. With power off, check the continuity of the thermostat and wiring. Repair or replace as necessary.

If checking the furnace in the air conditioning mode, proceed as follows.

7. With power off, Jumper terminals R to Y to G.
8. Turn on the power.
9. If the furnace blower motor starts and the condensing unit runs, then the trouble is in the thermostat or wiring. Repair or replace as necessary.
10. After completing check and/or repair of wiring and check and/or replacement of thermostat, reinstall blower compartment door.
11. Turn on electrical power and verify proper unit operation.

SERVICING

CHECKING TRANSFORMER AND CONTROL CIRCUIT

A step-down transformer 120 volt primary to 24 volt secondary, 40 VA (Heating and Cooling Models) supplies ample capacity of power for either operation.

⚠ WARNING

HIGH VOLTAGE

DISCONNECT ALL POWER BEFORE SERVICING OR CHANGING ANY ELECTRICAL WIRING. MULTIPLE POWER SOURCES MAY BE PRESENT. FAILURE TO DO SO MAY CAUSE PROPERTY DAMAGE, PERSONAL INJURY OR DEATH.

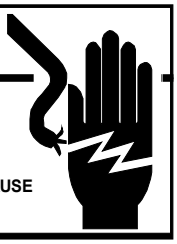

1. Remove blower compartment door to gain access to the thermostat low voltage wires located at the furnace integrated control module.
2. Remove the thermostat low voltage wires at the furnace integrated control module terminals.

With Power On (and Door Interlock Switch closed):

⚠ WARNING

LINE VOLTAGE NOW PRESENT

3. Use a voltmeter, check voltage across terminals R and C. Must read 24 VAC.
4. No voltage indicates faulty transformer, open fuse, bad wiring, bad splice, or open door interlock switch.
5. Check transformer primary voltage at incoming line voltage connections, fuse, splices, and blower door interlock switch.
6. If line voltage is available to the primary side of transformer and not at secondary side, the transformer is inoperative. Replace.
7. After completing check and/or replacement of transformer and check and/or repair of control circuit, reinstall blower compartment door.
8. Turn on electrical power and verify proper unit operation.

4-Wire ECM Motors

Description

These models utilize an Nidec US motors, 4-wire variable speed ECM blower motor. The ECM blower motor provides constant CFM.

The motor is a serially communicating variable speed motor. Only four wires are required to control the motor: +Vdc, Common, Receive, and Transmit.

The +Vdc and Common wires provide power to the motor's low voltage control circuits. Typical supply voltage is 9-15 volts DC.

ECM Control Connections

ECM control connections are made through the integrated ignition control. No other control connections are needed.

NOTE: An inductor *(Factor Power Choke Correction)* is required when powering the 3/4 and 1 horsepower motors with 115 volts (inductor pictured below). The operation of this inductor is to reduce the line current by storing the electrical energy in a magnetic field, such that the voltage AC waveform leads the current AC waveform. In other words, the inductor reduces line current which extends the life of the 3/4 and 1 horsepower motors.

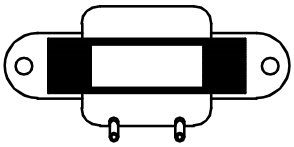

IMPORTANT: If the inductor fails, there will be no motor operation since this is the "LINE" power supply, black wire, from the integrated ignition control to the motor. To determine if the inductor is at fault, you can bypass by the inductor by disconnecting the black wire from the inductor and connecting it directly to the motor. If the motor operates then the inductor will need to be replaced.

Checking ECM Motors

ECMmotors connect directly to the AC Line Voltage. **DO NOT** insert contactors in series with the ECM Motor AC Line. The control is powered continuously to insure reliable start-up. The connector plug is polarized, verify and reverify correct connector orientation before applying power. **DO NOT** force plug into motor and make sure power is off before inserting power connector. **DO NOT** apply voltage to terminals 1 or 2.

General Checks/Considerations

1. Check power supply to the furnace. Ensure power supply is within the range specified on rating plate.
2. Check motor power harness. Ensure wires are continuous and make good contact when seated in the connectors. Repair or replace as needed.
3. Check motor control harness. Ensure wires are continuous and make good contact when seated in the connectors. Repair or replace as needed.
4. Check thermostat and thermostat wiring. Ensure thermostat is providing proper cooling/heating/continuous fan demands. Repair or replace as needed.
5. Check blower wheel. Confirm wheel is properly seated on motor shaft. Set screw must be on shaft flat and torqued to 165 in-lbs minimum. Confirm wheel has no broken or loose blades. Repair or replace as needed.
6. Ensure motor and wheel turn freely. Check for interference between wheel and housing or wheel and motor. Repair or replace as needed.

SERVICING

7. Check housing for cracks and/or corrosion. Repair or replace as needed.
8. Check motor mounting bracket. Ensure mounting bracket is tightly secured to the housing. Ensure bracket is not cracked or broken.

ULTRACHECK-EZ™ DIAGNOSTIC TOOL

The UltraCheck-EZ™ diagnostic tool is the preferred method (part # UTT-01) to diagnose the ECM motor.

WARNING

HIGH VOLTAGE!
Disconnect ALL power before servicing or installing. Multiple power sources may be present. Failure to do so may cause property damage, personal injury or death.



To use the diagnostic tool, perform the following steps:

1. Disconnect power to the furnace.
2. Disconnect the 4-circuit control harness from the motor.
3. Plug the 4-circuit connector from the diagnostic tool into the motor control connector.
4. Connect one alligator clip from the diagnostic tool to a ground source.
5. Connect the other alligator clip to a 24VAC source.

NOTE: The alligator clips are NOT polarized.

NOTE: The UltraCheck-EZ™ diagnostic tool is equipped with a non-replaceable fuse. Connecting the tool to a source other than 24VAC could damage the tool and cause the fuse to open. Doing so will render the diagnostic tool inoperable.

6. Turn on power to the furnace.

WARNING

Line Voltage now present.

7. Depress the orange power button on the diagnostic tool to send a run signal to the motor. Allow up to 5 seconds for the motor to start.

NOTE: If the orange power button does not illuminate when depressed, the tool either has an open fuse or is not properly connected to a 24VAC source.

8. The green LED on the diagnostic tool will blink indicating communications between the tool and motor. See table below for indications of tool indicators and motor actions. Replace or repair as needed.

Power Button	Green LED	Motor Action	Indication(s)
OFF	OFF	Not Rotating	Confirm 24VAC to UltraCheck-EZ™ tool. If 24VAC is confirmed, diagnostic tool is inoperable.
ON	Blinking	Rotating	Motor and control/end bell are functioning properly.
ON	OFF	Rotating	Replace motor control/end bell.
ON	Blinking	Not Rotating	Check motor (see *Motor Checks* below).
ON	OFF	Not Rotating	Replace motor control/end bell; verify motor (see *Motor Checks* below).

9. Depress the orange power button to turn off motor.
10. Disconnect power. Disconnect diagnostic tool.
11. Reconnect the 4-wire harness from control board to motor.

ELECTRICAL CHECKS - HIGH VOLTAGE POWER CIRCUITS

WARNING

HIGH VOLTAGE!
Disconnect ALL power before servicing or installing. Multiple power sources may be present. Failure to do so may cause property damage, personal injury or death.



1. Disconnect power to the furnace.
2. Disconnect the 5-circuit power connector to the ECM motor.
3. Turn on power to the furnace.

WARNING

Line Voltage now present.

4. Measure voltage between pins 4 and 5 on the 5-circuit connector. Measured voltage should be the same as the supply voltage to the furnace.

SERVICING

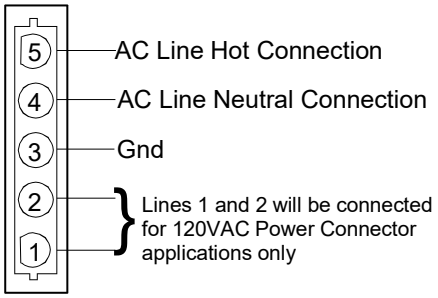

POWER CONNECTOR
(1/2 HP MOTORS)
"Motor Half"
(Viewed from Plug End)

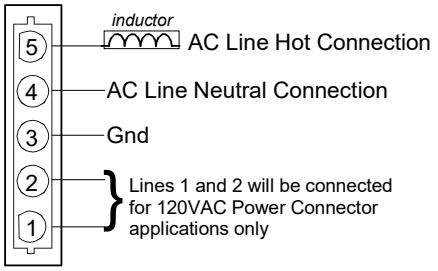

POWER CONNECTOR
(3/4 & 1 HP MOTORS)
"Motor Half"
(Viewed from Plug End)

5. Measure voltage between pins 4 and 3. Voltage should be approximately zero.
6. Measure voltage between pins 5 and 3. Voltage should be the same as the supply voltage to the furnace.
7. If no voltage is present, check supply voltage to the furnace.
8. Disconnect power to the furnace. Reconnect the 5-circuit power harness disconnected in step 2.

ELECTRICAL CHECKS - LOW VOLTAGE CONTROL CIRCUITS

1. Turn on power to the furnace.

WARNING

Line Voltage now present.

2. Check voltage between pins 1 and 4 on the 4-wire motor control harness between the motor and control board. Voltage should be between 3 and 15 VDC.
3. If no voltage is present, check control board.

MOTOR CONTROL/END BELL CHECKS

WARNING

HIGH VOLTAGE!
Disconnect ALL power before servicing or installing. Multiple power sources may be present. Failure to do so may cause property damage, personal injury or death.



1. Disconnect power to the furnace.

   NOTE: Motor contains capacitors that can hold a charge for several minutes after disconnecting power. Wait 5 minutes after removing power to allow capacitors to discharge.
2. Disconnect the motor control harness and motor power harness.
3. Remove the blower assembly from the furnace.
4. Remove the (3) screws securing the control/end bell to the motor. Separate the control/end bell. Disconnect the 3-circuit harness from the control/end bell to remove the control/end bell from the motor.
5. Inspect the NTC thermistor inside the control/end bell (see figure below). Replace control/end bell if thermistor is cracked or broken.

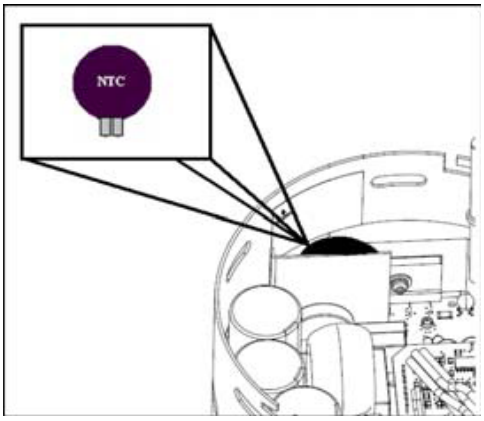

6. Inspect the large capacitors inside the control/end bell (see figure below). Replace the control/end bell if any of the capacitors are bulging or swollen.

SERVICING

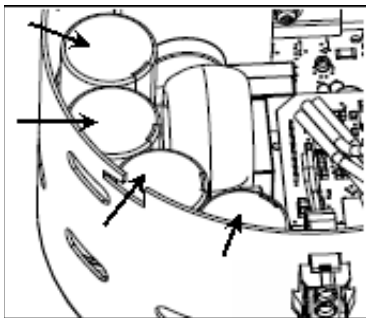

7. Locate the 3-circuit connector in the control/end bell. Using an ohmmeter, check the resistance between each terminal in the connector. If the resistance is 100kΩ or greater, the control/end bell is functioning properly. Replace the control/end bell if the resistance is lower than 100kΩ.
8. Reassemble motor and control/end bell in reverse of disassembly. Replace blower assembly into the furnace.

MOTOR CHECKS

WARNING

HIGH VOLTAGE!
Disconnect ALL power before servicing or installing. Multiple power sources may be present. Failure to do so may cause property damage, personal injury or death.

1. Disconnect power to the furnace.

NOTE: Motor contains capacitors that can hold a charge for several minutes after disconnecting power. Wait 5 minutes after removing power to allow capacitors to discharge.

2. Disassemble motor as described in steps 2 through 4 above.
3. Locate the 3-circuit harness from the motor. Using an ohmmeter, measure the resistance between each motor phase winding. The resistance levels should be equal. Replace the motor if the resistance levels are unequal, open circuited or short circuited.
4. Measure the resistance between each motor phase winding and the motor shell. Replace the motor if any phase winding is short circuited to the motor shell.
5. Reassemble motor and control/end bell in reverse of disassembly. Replace blower assembly into the furnace.

CHECKING DUCT STATIC

The maximum and minimum allowable external static pressures are found in the specification section. These tables also show the amount of air being delivered at a given static by a given motor speed or pulley adjustment.

The furnace motor cannot deliver proper air quantities (CFM) against statics other than those listed.

Too great of an external static pressure will result in insufficient air that can cause excessive temperature rise, resulting in limit tripping, etc. Whereas not enough static may result in motor overloading.

To determine proper air movement, proceed as follows:

1. With clean filters in the furnace, use a manometer to measure the static pressure of the return duct at the inlet of the furnace. (Negative Pressure)
2. Measure the static pressure of the supply duct. (Positive Pressure)
3. Add the two (2) readings together for total external static pressure.

NOTE: Both readings may be taken simultaneously and read directly on the manometer if so desired. If an air conditioner coil or Electronic Air Cleaner is used in conjunction with the furnace, the readings must also include theses components, as shown in the following drawing.

4. Consult proper tables for the quantity of air.

If the total external static pressure exceeds the minimum or maximum allowable statics, check for closed dampers, registers, undersized and/or oversized poorly laid out duct work.

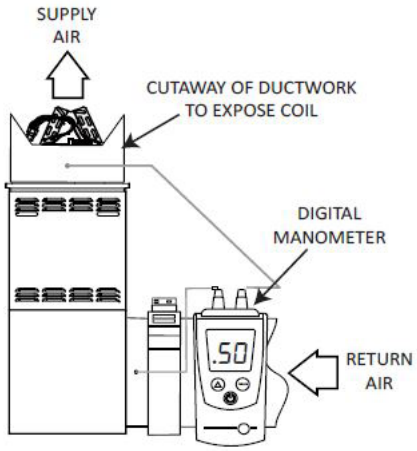

Checking Static Pressure

CHECKING TEMPERATURE RISE

The more air (CFM) being delivered through a given furnace, the less the rise will be; so the less air (CFM) being delivered, the greater the rise. The temperature rise should be adjusted in accordance to a given furnace specifications and its external static pressure. An incorrect temperature rise may result in condensing in or overheating of the heat exchanger. An airflow and temperature rise table is provided in the blower performance specification section. Determine and adjust temperature rise as follows:

SERVICING

1. Operate furnace with burners firing for approximately ten minutes. Check BTU input to furnace - do not exceed input rating stamped on rating plate. Ensure all registers are open and all duct dampers are in their final (fully or partially open) position.
2. Place thermometers in the return and supply ducts as close to the furnace as possible. Thermometers must not be influenced by radiant heat by being able to “see” the heat exchanger.

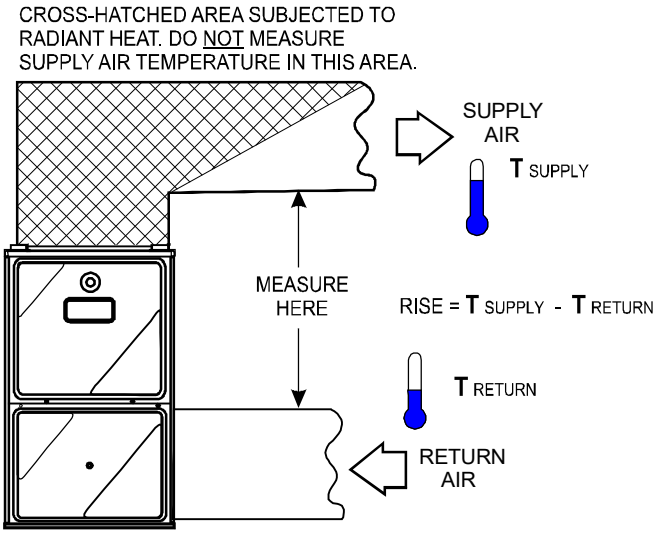

Temperature Rise Measurement

3. Subtract the return air temperature from the supply air temperature to determine the air temperature rise. Allow adequate time for thermometer readings to stabilize.
4. Adjust temperature rise by adjusting the circulator blower speed. Increase blower speed to reduce temperature rise. Decrease blower speed to increase temperature rise. Refer to *Circulator Blower Speed* section in the Product Design section of this manual for speed changing details. Temperature rise is related to the BTUH output of the furnace and the amount of air (CFM) circulated over the heat exchanger. Measure motor current draw to determine that the motor is not overloaded during adjustments.

CHECKING PRIMARY LIMIT CONTROL

Primary limit controls are nonadjustable, automatic reset, bi-metal type limit control. Refer to the following drawing for the location of the primary limit.

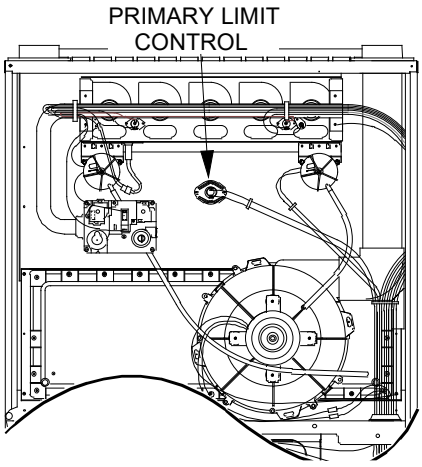

Primary Limit Control Location
(90% Upflow Furnace Shown, Counterflow Similar)

The following drawing illustrates the style of limit switches used on the 90% furnaces.

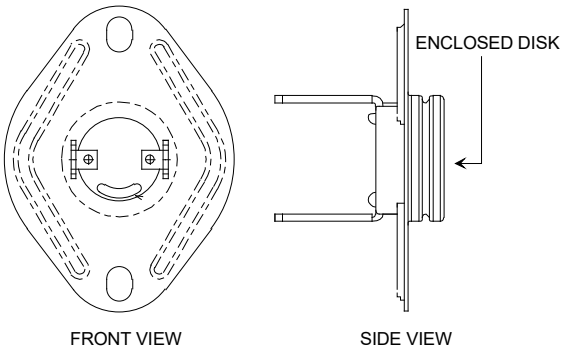

Primary Limit Control Style
(90% Furnaces)

⚠ WARNING

HIGH VOLTAGE

DISCONNECT ALL POWER BEFORE SERVICING OR CHANGING ANY ELECTRICAL WIRING. MULTIPLE POWER SOURCES MAY BE PRESENT. FAILURE TO DO SO MAY CAUSE PROPERTY DAMAGE, PERSONAL INJURY OR DEATH.

1. Remove burner compartment door to gain access to the primary limit.
2. Remove low voltage wires at limit control terminals.
3. With an ohmmeter, test between these two terminals as shown in the following drawing. The ohmmeter should read continuous unless heat exchanger temperature is above limit control setting. If not as above, replace the control.

SERVICING

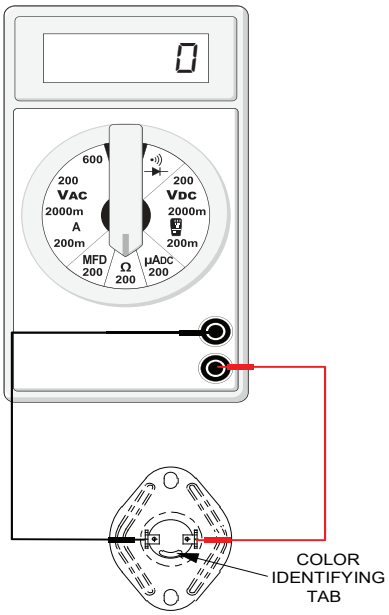

Testing Primary Limit Control (90% Furnaces)

4. After completing check and/or replacement of primary limit control, reinstall burner compartment door.
5. Turn on electrical power and verify proper unit operation.

To aid in identifying these controls, refer to the *Primary Limit Charts* in furnace Technical Manual for part number, temperature setting and color(s) code.

CHECKING AUXILIARY LIMIT CONTROL

The auxiliary limit control is designed to prevent furnace operation in case of main blower failure in horizontal or counterflow installations. It may also open if the power supply is interrupted while the furnace is firing.

The auxiliary limit control is suitable for both horizontal right and horizontal left installations. Regardless of airflow direction, it does not need to be relocated. The (2) two auxiliary limits are located on the blower housing (one on each side), as shown in the following illustration.

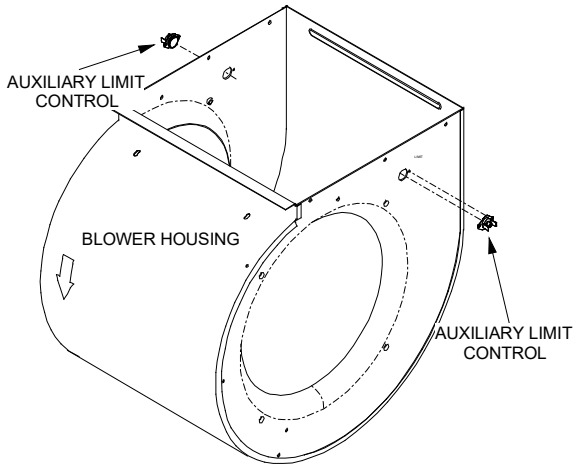

Auxiliary Limit Control Location (Select 90% / 95% Furnaces)

AUTOMATIC RESET AUXILIARY LIMITS LOCATED IN BLOWER SIDE

WARNING

HIGH VOLTAGE

DISCONNECT ALL POWER BEFORE SERVICING OR INSTALLING THIS UNIT. MULTIPLE POWER SOURCES MAY BE PRESENT. FAILURE TO DO SO MAY CAUSE PROPERTY DAMAGE, PERSONAL INJURY OR DEATH.

1. Remove the wires from the auxiliary limit control terminals.
2. Using an ohmmeter, test for continuity across the two terminals (only test when the auxiliary limit is at room temperature).

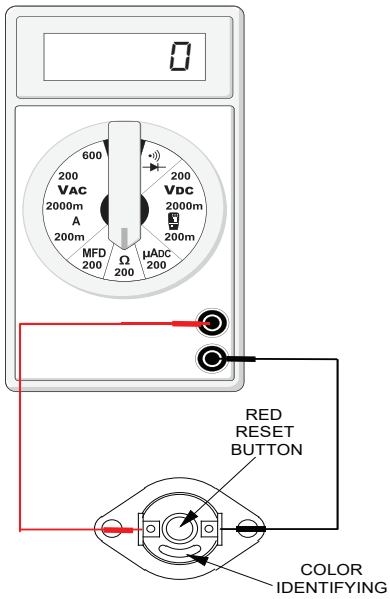

Testing Auxiliary Limit Control

WARNING

TO AVOID POSSIBLE FIRE, ONLY RESET THE AUXILIARY LIMIT CONTROL ONCE. IF IT SHOULD OPEN A SECOND TIME, A QUALIFIED SERVICER MUST DETERMINE WHY THE AUXILIARY LIMIT OPENED BEFORE RESETTING AGAIN.

CHECKING FLAME ROLLOUT CONTROL

A temperature activated manual reset control is mounted to the manifold assembly on 90% furnaces, as shown in the following illustration.

SERVICING

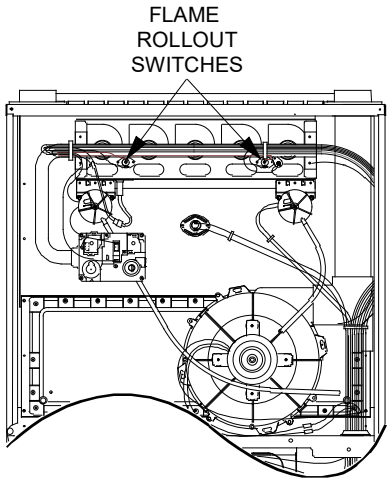

Flame Rollout Switch Location
(90% Upflow Furnace Shown, Counterflow Similar)

The control is designed to open should a flame roll out occur. An over firing condition or flame impingement on the heat shield may also cause the control to open. If the rollout control opens, the air circulation blower will run continuously.

⚠ WARNING

LINE VOLTAGE NOW PRESENT

1. Remove the burner compartment door to gain access to the rollout switch(es) mounted to burner bracket.
2. Reset the manual rollout switch.
3. Remove wires from rollout switch.
4. Using an ohmmeter, check for coninuity across the switch.
5. If the switch will not close after manually resetting, it must be replaced.

If a roll out switch has tripped, it is important to find out why. Possible causes could be flame impingement, orifice plate out of position, burners with excessive cross-over slot dimension, over-firing, improper orifices, improper gas pressure, air leaking from around the heat exchanger into the burner compartment, air leaking through the heat exchanger itself.

6. After check and/or replacement of rollout switch, reinstall burner compartment door and verify proper unit operation.

INDUCED DRAFT BLOWER MOTOR

⚠ WARNING

HIGH VOLTAGE
DISCONNECT ALL POWER BEFORE SERVICING OR INSTALLING THIS UNIT. MULTIPLE POWER SOURCES MAY BE PRESENT. FAILURE TO DO SO MAY CAUSE PROPERTY DAMAGE, PERSONAL INJURY OR DEATH.

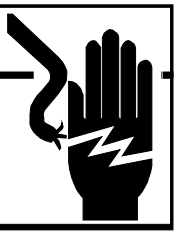

1. Remove burner compartment door to gain access to the induced draft blower motor.
2. Disconnect the motor wire leads from its connection point at the induced draft motor.
3. Using a ohmmeter, test for continuity between each of the motor leads.
4. Touch one probe of the ohmmeter to the motor frame (ground) and the other probe in turn to each lead.

   If the windings do not test continuous or a reading is obtained to ground, replace the motor.
5. If the windings have a continuity reading, reconnect wires. Turn power on to the furnace and turn the thermostat on in the heating mode. Check voltage for 115V at the induced draft motor terminals during the trial for ignition. If you have 115V and the motor does not run, replace the induced draft motor.
6. After completing check and/or replacement of induced draft motor, reinstall burner compartment door.
7. Turn on electrical power and verify proper unit operation.

CHECKING MODULATING GAS VALVE

The gas valve on ComfortBridge™ Modulating Furnace uses a 24VAC electrically stepped valve by White Rodgers. The furnace will fire at 100% firing rate for the first heating cycle. Based on the furnace internal control algorithms the gas valve and induced draft blower will modulate to provide the correct gas input needed. The valve provides control of the main burner gas flow, pressure regulation, and 100 percent safety shut off.

NOTE: Upon power up, the gas valve stepper motor may activate to change position. This actually is a calibration process for the modulating gas valve. During this event a slight clicking sound from the stepper motor may be heard. This clicking sound is inherent to the stepper motor and does not indicate a problem.

The front cover pressure switch is wired in series with Pin 5 on the gas valve (24 volt hot) so if you are not getting voltage to the valve ensure the front cover pressure switch is closed.

Recommend voltage checks on the gas valve:

PIN 5 - TH - MAIN VALVE 24 VAC

PIN 4 - TR - GROUND

PIN 3 - TX - COMMUNICATION TO IFC 3.3 VDC

PIN 2 - RX - COMMUNICATION TO STEPPER 5.0 VDC

PIN 1 - TH - BOARD 24 VAC

SERVICING

WARNING

DISCONNECT ALL POWER BEFORE SERVICING

CHECKING MAIN BURNERS

The main burners are used to provide complete combustion of various fuels in a limited space, and transfer this heat of the burning process to the heat exchanger.

Proper ignition, combustion, and extinction are primarily due to burner design, orifice sizing, gas pressure, primary and secondary air, vent and proper seating of burners.

BURNERS

Burners have been redesigned for 34.5" chassis furnaces. Overall length and width dimensions remain the same as 40" model burners. The burners used 34.5" models have burner head insert with larger diameter center hole and a larger number of surrounding holes.

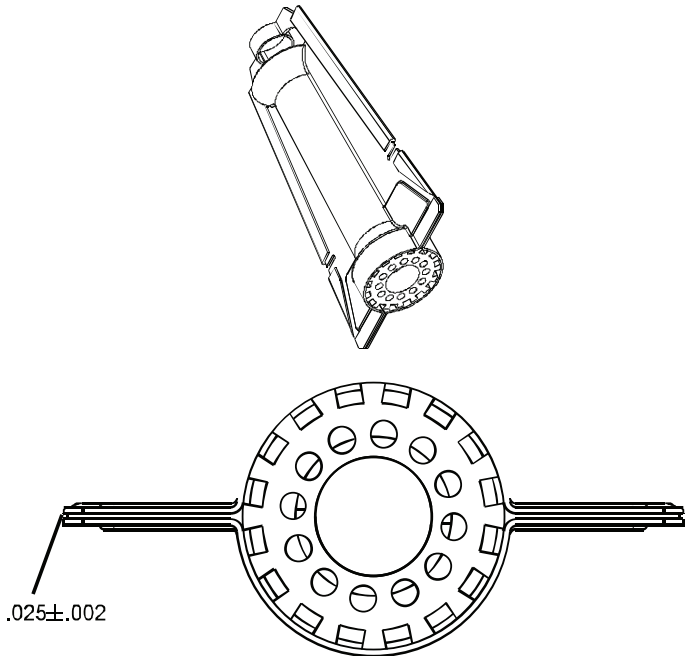

34.5 Burners

WARNING

DISCONNECT ALL GAS AND ELECTRICAL POWER SUPPLY.

In checking main burners, look for signs of rust, oversized and undersized carry over ports restricted with foreign material, etc., burner cross-over slots should not be altered in size.

CHECKING ORIFICES

A/GMVM, A/GCVM model furnaces have factory installed #45 natural gas orifices.

The only time resizing is required is when a reduction in firing rate is required for an increase in altitude or a funace is being converted for use with L.P. gas.

Orifices should be treated with care in order to prevent damage. They should be removed and installed with a box-end wrench in order to prevent distortion. In no instance should an orifice be peened over and re-drilled. This will change the angle or deflection of the vacuum effect or entraining of primary air, which will make it difficult to adjust the flame properly. This same problem can occur if an orifice spud of a different length is substituted.

WARNING

DISCONNECT ALL GAS AND ELECTRICAL POWER SUPPLY.

1. Check orifice visually for distortion and/or burrs.
2. Check orifice size by the number stamped on the orifice.

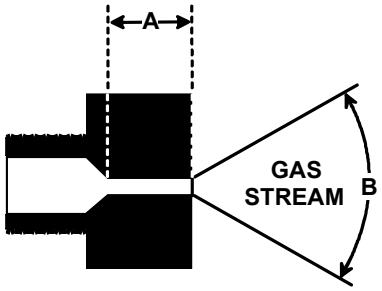

The length of Dimension "A" determines the angle of Gas Stream "B".

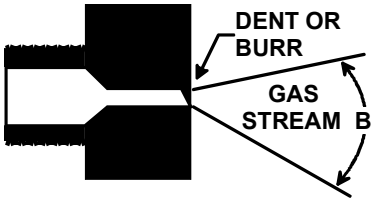

A dent or burr will cause a severe deflection of the gas stream.

CHECKING GAS PRESSURE

GAS SUPPLY PRESSURE MEASUREMENT

CAUTION

TO PREVENT UNRELIABLE OPERATION OR EQUIPMENT DAMAGE, THE INLET GAS SUPPLY PRESSURE MUST BE AS SPECIFIED ON THE UNIT RATING PLATE WITH ALL OTHER HOUSEHOLD GAS FIRED APPLIANCES OPERATING.

Gas inlet and manifold pressures should be checked and adjusted in accordance to the type of fuel being consumed.

The line pressure supplied to the gas valve must be within the range specified below. The supply pressure can be measured at the gas valve inlet pressure tap or at a hose fitting installed in the gas piping drip leg. The supply pressure must be measured with the burners operating. To measure the gas supply pressure, use the following procedure.

SERVICING

WARNING

DISCONNECT ELECTRICAL POWER AND SHUT OFF GAS SUPPLY.

1. After turning off gas to furnace at the manual gas shutoff valve external to the furnace, remove burner compartment door to gain access to the gas valve.
2. Connect a calibrated manometer (or appropriate gas pressure gauge) at either the gas valve inlet pressure tap or the gas piping drip leg as shown in the following figures.

NOTE: At either location, a hose fitting must be installed prior to making the hose connection.

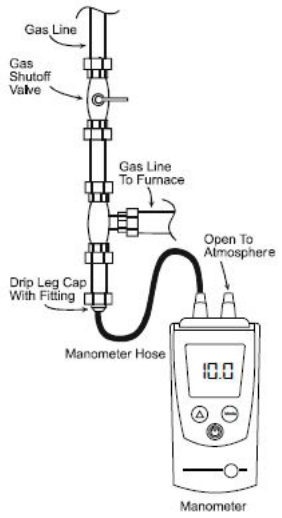

Measuring Inlet Gas Pressure (Alternate Method)

3. Turn ON the gas and electrical power supply and operate the furnace and all other gas consuming appliances on the same gas supply line.
4. Measure furnace gas supply pressure with burners firing. Supply pressure must be within the range specified in the following table.

INLET GAS SUPPLY PRESSURE		
Natural Gas	Minimum: 4.5" w.c.	Maximum: 10.0" w.c.
Propane Gas	Minimum: 11.0" w.c.	Maximum: 13.0" w.c.

If supply pressure differs from above, make necessary adjustments to pressure regulator, gas piping size, etc., and/or consult with local gas utility.

WARNING

HIGH VOLTAGE
DISCONNECT ALL ELECTRICAL POWER AND SHUT OFF GAS SUPPLY BEFORE SERVICING OR INSTALLING THIS UNIT. MULTIPLE POWER SOURCES MAY BE PRESENT. FAILURE TO DO SO MAY CAUSE PROPERTY DAMAGE, PERSONAL INJURY OR DEATH.

5. Disconnect manometer after turning off gas at manual shutoff valve. Reinstall plug before turning on gas to furnace.
6. Turn OFF any unnecessary gas appliances started in step 3.
7. Turn on gas to furnace and check for leaks. If leaks are found, repair and then reinstall burner compartment door.
8. Turn on electrical power and verify proper unit operation.

WARNING

HIGH VOLTAGE
DISCONNECT ALL ELECTRICAL POWER AND SHUT OFF GAS SUPPLY BEFORE SERVICING OR INSTALLING THIS UNIT. MULTIPLE POWER SOURCES MAY BE PRESENT. FAILURE TO DO SO MAY CAUSE PROPERTY DAMAGE, PERSONAL INJURY OR DEATH.

Gas Manifold Pressure Measurement and Adjustment
Natural Gas Adjustments

WARNING

HIGH VOLTAGE
DISCONNECT ALL ELECTRICAL POWER AND SHUT OFF GAS SUPPLY BEFORE SERVICING OR INSTALLING.

NOTE: Follow this procedure to test the gas valve pressure at 100% firing rate.

Only small variations in gas pressure should be made by adjusting the gas valve pressure regulator. The manifold pressure must be measured with the burners operating. To measure and adjust the manifold pressure, use the following procedure.

1. After turning off gas to furnace at the manual gas shutoff valve external to the furnace, remove burner compartment door to gain access to the gas valve.
2. Connect a calibrated manometer (or appropriate gas pressure gauge) at the gas valve outlet pressure tap.

WARNING

LINE VOLTAGE NOW PRESENT

3. Turn ON the gas and electrical power supply and operate the furnace.
4. White-Rodgers 36J27 Valves:
   a. Remove 1/8" N.P.T. plug using 5/16" Allen wrench & connect proper adapter for manometer connection.
   b. Attach a hose and manometer to the outlet pressure tap.
   c. Turn ON the gas supply.
   d. Turn on power and close thermostat "R" and "W1" contacts to provide a call for low stage heat.
   e. Measure the gas manifold pressure with burners firing. Adjust manifold pressure.

SERVICING

f. Use the modulation adjustment screw on the gas valve and turn clockwise one click using a pocket screwdriver to increase gas flow. Allow the gas flow to adjust approximately 15 seconds before moving the adjustment screw again. Turn the modulation adjustment screw counterclockwise with a pocket screwdriver to decrease gas flow if this adjustment is needed. Allow the gas flow to adjust approximately 15 seconds before moving the adjustment screw again. These changes should only be done to fine tune the gas flow.

g. Turn off all electrical power and gas supply to the system.

h. Remove the manometer hose and adapter from gas valve.

i. Install 1/8" N.P.T. plug using 5/16" Allen wrench.

j. Turn on electrical and gas supply to the furnace.

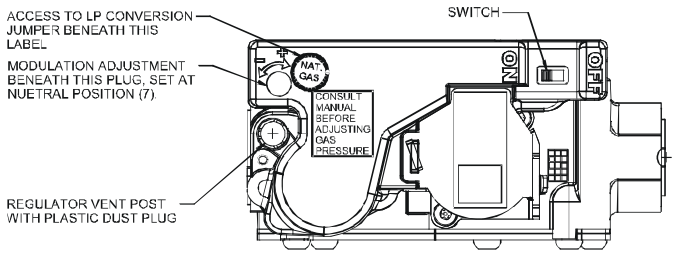

Measuring Manifold Gas Pressure (36J27 Valve)

WARNING

HIGH VOLTAGE

DISCONNECT ALL ELECTRICAL POWER AND SHUT OFF GAS SUPPLY BEFORE SERVICING OR INSTALLING.

WARNING

HIGH VOLTAGE

DISCONNECT ALL ELECTRICAL POWER AND SHUT OFF GAS SUPPLY BEFORE SERVICING OR INSTALLING THIS UNIT.

MULTIPLE POWER SOURCES MAY BE PRESENT. FAILURE TO DO SO MAY CAUSE PROPERTY DAMAGE, PERSONAL INJURY OR DEATH.

WARNING

HIGH VOLTAGE

DISCONNECT ALL ELECTRICAL POWER AND SHUT OFF GAS SUPPLY BEFORE SERVICING OR INSTALLING.

Manifold Gas Pressure			
Gas Type	**Gas Input**	**Nominal**	**Range**
Natural	50%	.9" w.c.	.6"w.c. - 3.8"w.c.
	100%	3.5" w.c.	
Propane	50%	2.5" w.c.	2.2"w.c. - 10.3"w.c.
	100%	10.0" w.c.	

CHECKING HOT SURFACE IGNITER

120V Silicon Nitride Igniter - Amana® Brand and Goodman® Brand A/GMVM97 and A/GCVM97 furnaces use a 120V silicon nitride igniter for ignition. The normal operating temperature is approximately 2156°F - 2678°F.

WARNING

DISCONNECT ALL POWER BEFORE SERVICING.

1. Remove burner compartment door to gain access to the igniter.
2. Igniter cool - approximately 70 - 77°F.
3. Disconnect the igniter from the Ignition Control.
4. Using an ohmmeter measure the resistance of the igniter:
   120 Volt Silicon Nitride: 120V Nitride Igniter should read between 37 to 68 ohms.
5. Reconnect igniter.

WARNING

LINE VOLTAGE NOW PRESENT

6. Place unit in heating cycle, measure current draw of igniter during preheat cycle.
   The steady state current at 120V is 0.37 to 0.68 amps.
7. After checking and/or replacing of hot surface igniter, reinstall burner compartment door and verify proper unit operation.

CHECKING FOR FLASHBACK

Flashback will also cause burning in the burner venturi, but is caused by the burning speed being greater than the gas-air flow velocity coming from a burner port.

Flashback may occur at the moment of ignition, after a burner heats up or when the burner turns off. The latter is known as extinction pop.

Since the end results of flashback and delayed ignition can be the same (burning in the burner venturi) a definite attempt should be made to determine which has occurred.

If flashback should occur, check for the following:

1. Improper gas pressure - adjust to proper pressure
2. Check burner for proper alignment and/or replace burner.
3. Improper orifice size - check orifice for obstruction.

SERVICING

CHECKING PRESSURE CONTROL

The pressure control is a safety device to prevent the combustion cycle from occurring with inadequate venting caused by a restricted or blocked vent pipe. In addition to the high fire and low fire pressure switches, A/GMVM97 and A/GCVM97 model furnaces have a "front cover pressure switch" wired in series with the gas valve. This pressure switch keeps the gas valve from opening in the event of condensate backing up in the secondary heat exchanger. This could occur from improperly connected drains or a plugged drain tube.

⚠ WARNING

HIGH VOLTAGE

DISCONNECT ALL POWER BEFORE SERVICING OR INSTALLING THIS UNIT. MULTIPLE POWER SOURCES MAY BE PRESENT. FAILURE TO DO SO MAY CAUSE PROPERTY DAMAGE, PERSONAL INJURY OR DEATH.

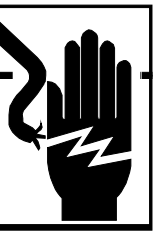

1. Remove burner compartment door to gain access to pressure switch(es).
2. Remove wires from the pressure switch(es) electrical terminals.
3. Remove the pressure control hose from the control and interconnect with a manometer as shown in the following figure.
4. With an ohm meter connected across the pressure switch terminals and with the inducer running, the switch should close and the ohm meter should show a complete circuit across the pressure switch. If the switch is not closed, compare the negative pressure to the closing point specified for the particular switch. Either the switch is defective or the inducer/venting system is inadequate.

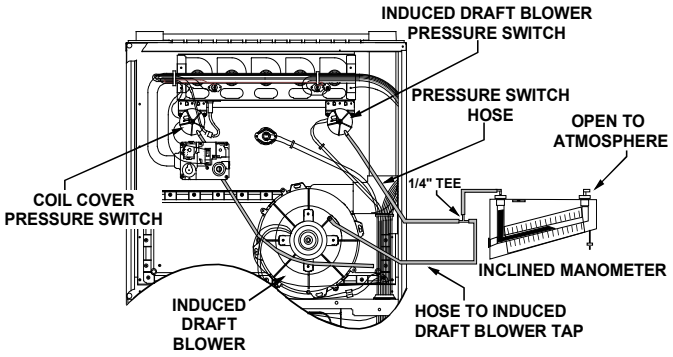

Blower Pressure Switch
Negative Pressure Measurement
(90% Upflow Furnace Shown, Counterflow Similar)

HIGH ALTITUDE APPLICATION (USA)

When furnaces are installed at high altitude, the appropriate High Altitude Orifice or Pressure Switch Kit must be applied. This is required due to the natural reduction in the density of both the gas fuel and combustion air as altitude increases. The High Altitude Orifice Kit will provide the proper design certified input rate within the specified altitude range.

High Altitude Orifice or Pressure Switch Kits are purchased according to the installation altitude and usage of either natural or propane gas. Refer to the Technical Manual or product Specification Sheet for a tabular listing of appropriate altitude ranges and corresponding manufacturer's high altitude (Natural or Propane Gas) orifice or pressure switch kits.

Do **not** derate the furnace by adjusting the manifold pressure to a lower pressure than specified on the furnace rating plate. The combination of the lower air density and a lower manifold pressure will prohibit the burner orifice from drawing the proper amount of air into the burner. This may cause incomplete combustion, flashback, and possible yellow tipping.

In some areas the gas supplier may artificially derate the gas in an effort to compensate for the effects of altitude. If the gas is artificially derated the appropriate orifice size must be determined based on the BTU/ft^3 content of the derated gas and the altitude. Refer to the National Fuel Gas Code, NFPA 54/ANSI Z223.1, and information provided by the gas supplier to determine the proper orifice size.

SERVICING

CHECKING FOR DELAYED IGNITION

Delayed ignition is a delay in lighting a combustible mixture of gas and air which has accumulated in the combustion chamber.

When the mixture does ignite, it may explode and/or rollout causing burning in the burner venturi.

If delayed ignition should occur, the following should be checked. Furnace design makes this extremely unlikely unless safety controls have been by-passed or tampered with. Never by-pass or alter furnace controls.

1. Improper gas pressure - adjust to proper pressure
2. Improper burner positioning - burners should be in locating slots, level front to rear and left to right.
3. Carry over (lighter tube or cross lighter) obstructed - clean.
4. Main burner orifice(s) deformed, or out of alignment to burner - replace.

CHECKING INTEGRATED IGNITION CONTROL BOARDS

NOTE: Failure to earth ground the furnace, reversing the neutral and hot wire connection to the line (polarity), or a high resistance connection in the neutral line may cause the control to lockout due to failure to sense flame.

⚠ WARNING

TO AVOID THE RISK OF ELECTRICAL SHOCK, WIRING TO THE UNIT MUST BE PROPERLY POLARIZED AND GROUNDED. DISCONNECT POWER BEFORE PERFORMING SERVICE LISTED BELOW.

The ground wire must run from the furnace all the way back to the electrical panel. Proper grounding can be confirmed by disconnecting the electrical power and measuring resistance between the neutral (white) connection and the burner closest to the flame sensor. Resistance should be less than 2 ohms.

The ignition control is a combination electronic and electro-mechanical device and is not field repairable. Complete unit must be replaced.

⚠ WARNING

LINE VOLTAGE NOW PRESENT

These tests must be completed within a given time frame due to the operation of the ignition control. The trial for ignition period is 4 seconds.

The ignition control is capable of diagnosing many furnace failures to help in troubleshooting. The control utilizes a dual, 7-segment LED display to indicate diagnostic codes.

When the control is powered up normally the light will be on continuously. The display will indicate **"ON"** when powered and in standby mode. This can be used to test for 120 volts and 24 volts to the control since both must be present for the light to be on. If this step fails, check for 120 volts to the control and check the transformer and its associated wiring.

If this step is successful give the control a call for heat and wait five (5) seconds or until the furnace goes into lockout. If the control detects a failure it will now be shown on the diagnostic indicator light/display. Refer to the *Abnormal Operation* section in the *Sequence of Operation* section of this manual for more detail on failure codes.

1. Check for 120 volts from Line 1 (Hot) to Line 2 (Neutral) at the ignition control. No voltage, check the door switch connections and wire harness for continuity.
2. With the thermostat calling for heat, check for 24 volts from W1 to C terminal on the ignition control. No voltage. Check transformer, room thermostat, and wiring.

   If you have 24 volts coming off the transformer but receive approximately 13 volts on the terminal board between (C) and (R), check for blown fuse.
3. Check for 120 volts to the induced draft blower (low-stage) by measuring voltage between Pin 3 and Pin 4 (on the 5-pin connector) located on circuit board. No voltage, check for loose connection in the 5-pin connector or replace ignition control.

   Check for 120 volts to the induced draft blower (high-stage) by measuring voltage between Pin 2 and Pin 4 (on the 5-pin connector) located on circuit board. No voltage, check for loose connection in the 5-pin connector, no call for high stage heat or replace ignition control.
4. If voltage is present in Steps 1 through 3 and the induced draft blower is operating, check for 120 volts to the igniter during the preheat cycle. Measure voltage between Pin 1 and Pin 5 (on the 5-pin connector) located on ignition control. No voltage, check low stage and high stage pressure switches or replace the ignition control board.
5. After the igniter warm-up time, begin checking for 24 volts to the gas valve. Voltage will be present for seven seconds only if proof of flame has been established.
6. If proof of flame was established voltage will be provided to the air circulation blower following the heat on delay period.
   a. BEFORE replacing the ECM motor assembly or the end bell, first check the motor with a Goodman #UTT-01 UltraCheck-EZ™ diagnostic tool. If the motor runs with the diagnostic tool, the motor is good. To check the end bell, see the previous variable speed testing section of this manual before replacing the end bell.
   b. The two-stage variable speed furnaces should have 120 Volts at the motor at all times, even without a call for cooling or heating. These motors receive their operational signals through the 4-pin wiring harness, connected between the motor and integrated control board.

SERVICING

CHECKING FLAME SENSOR

A flame sensing device is used in conjunction with the ignition control module to prove combustion. If proof of flame is not present the control will de-energize the gas valve and "retry" for ignition or lockout.

⚠ WARNING

HIGH VOLTAGE

DISCONNECT ALL POWER BEFORE SERVICING OR INSTALLING THIS UNIT. MULTIPLE POWER SOURCES MAY BE PRESENT. FAILURE TO DO SO MAY CAUSE PROPERTY DAMAGE, PERSONAL INJURY OR DEATH.

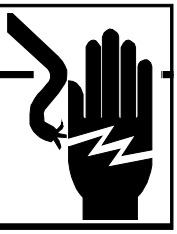

1. Disconnect the flame sensor wire from the sensor.
2. Connect a micro-amp meter in series with this wire and the sensor terminal.
3. Be sure the positive side of the meter is to the flame sensor wire and the negative side of the meter is to sensor terminal.

⚠ WARNING

LINE VOLTAGE NOW PRESENT

4. Place the unit into a heating cycle.
5. As soon as flame is established a micro-amp reading should be evident once proof of flame (micro-amp reading) is established, the hot surface igniter will be de-energized.
6. The Integrated Ignition controls will have 1 to 4 micro-amps. If the micro-amp reading is less than the minimum specified, check for high resistance wiring connections, sensor to burner gap, dirty flame sensor, or poor grounding.
7. If absolutely no reading, check for continuity on all components and if good - replace ignition control module.

NOTE: Contaminated fuel or combustion air can create a nearly invisible coating on the flame sensor. This coating works as an insulator causing a loss in the flame sense signal. If this situation occurs the flame sensor must be cleaned with steel wool.

TROUBLESHOOTING

Seven Segment Displays – Comm AC/HP			
Mode	Main Menu		
	Segment 1	Segment 2	Segment 3
Idle	I	d	L
Constant Fan	F	A	n
Compressor Cooling, Low Stage	A	C	1
Compressor Cooling, High Stage	A	C	2
Compressor Heat, Low Stage	H	P	1
Compressor Heat, High Stage	H	P	2
Gas Heat, Low Stage	9	H	1
Gas Heat, High Stage	9	H	2
Defrost, Low Stage Gas Heat	d	F	1
Defrost, High Stage Gas Heat	d	F	2

Seven Segment Displays – Inverter AC/HP			
Mode	Main Menu		
	Segment 1	Segment 2	Segment 3
Idle	I	d	L
Constant Fan	F	A	n
Compressor Cooling	u	A	C
Compressor Heat	u	H	P
Gas Heat, Low Stage	9	H	1
Gas Heat, High Stage	9	H	2
Defrost, Low Stage Gas heat	d	F	1
Defrost, High Stage Gas heat	d	F	2

Seven Segment Displays – Non Comm Single Stage or Two Stage AC/HP			
Mode	Main Menu		
	Segment 1	Segment 2	Segment 3
Idle	I	d	L
Constant Fan	F	A	n
Compressor Cooling, Low Stage	1	A	C
Compressor Cooling, High Stage	2	A	C
Compressor Cooling, Single-Stage		A	C
Compressor Heat, Low Stage	1	A	C
Compressor Heat, High Stage	2	A	C
Compressor Heat, Single-Stage		A	C
Gas Heat, Low Stage	9	H	1
Gas Heat, High Stage	9	H	2
Defrost, Low Stage Gas Heat	d	F	1
Defrost, High Stage Gas Heat	d	F	2

Seven Segment Displays – Humidifier, De-Humidifer, and Ventilator			
Mode	Main Menu		
	Segment 1	Segment 2	Segment 3
Humidifier	H	U	d
De-Humidifier	d	H	U
Ventilator	u	t	L

TROUBLESHOOTING

Alarm Code Definition Table			
Status	**Seven Segment Display**		
Internal Control Fault	E	E	E
Lockout Due to Excessive Retries or Recycles	E	E	0
Low Stage Pressure Switch Stuck Closed At the Beginning of Heating	E	E	1
Low Stage Pressure Switch Open	E	E	2
Open High Limit Switch	E	E	3
Flame Detected When no Flame Should be Present	E	E	4
Open Fuse	E	E	5
Low Flame Signal	E	E	6
Igniter Fault or Improper Grounding	E	E	7
High Stage Pressure Switch Stuck Closed at Start of Heating Cycle	E	E	8
High Stage Pressure Switch Open	E	E	9
Reversed Line Polarity	E	E	A
Internal Gas Valve Error	E	E	b
External Gas Valve Error	E	E	C
Auxiliary Limit Switch Open	E	E	d
Condensate Switch Open	E	E	F
Grounding Fault	E	1	0
Rollout Switch Open	E	1	1
Redundant Relay Open	E	1	2
Redundant Relay Stuck Closed	E	1	3

Alarm Code Definition Table			
Status	**Seven Segment Display**		
Data Not Yet on Network	E	d	0
Invalid Data on Network	E	d	1
Invalid External Shared Data	E	d	4
Invalid Downloaded Firmware	E	d	5
Un-Recognized Data ID	E	d	6
Blower Motor Not Running	E	b	0
Blower Communication Alarm	E	b	1
Blower Motor HP/ID Mismatch	E	b	2
Blower Motor Operating in Power, Temperature, or Speed Limit	E	b	3
Blower Motor Current Trip or Lost Rotor	E	b	4
Blower Motor Locked Rotor	E	b	5
Over/Under Voltage Trip or Over Temperature Trip	E	b	6
Incomplete Parameters Sent to Motor	E	b	7
Inadequate Airflow	E	b	9
Network Communication Alarm	E	C	1
E-Module Network Communication Alarm	E	C	2
Bluetooth Module Network Communication Alarm	E	C	3
Gas Valve Stepper Motor Comm Error	E	C	F

TROUBLESHOOTING

ClimateTalk Comm 2-Stage AC/HP		
Name	**7-Segment Display**	**Cloud / Phone App**
Idle	I dL	Idle
Constant Fan	FAn	Constant Fan
Compressor Cooling, Low Stage	AC 1	Compressor Cooling, Low Stage
Compressor Cooling, High Stage	AC2	Compressor Cooling, High Stage
Compressor Heat, Low Stage	HP 1	Compressor Heat, Low Stage
Compressor Heat, High Stage	HP2	Compressor Heat, High Stage
Gas Heat, Low Stage	GH 1	Gas Heat, Low Stage
Gas Heat, High Stage	GH2	Gas Heat, High Stage
Defrost, Low Stage Gas Heat	dF 1	Defrost, Low Stage Gas Heat
Defrost, High Stage Gas Heat	dF2	Defrost, High Stage Gas Heat
ClimateTalk Comm Inverter AC/HP		
Name	**7-Segment Display**	**Cloud / Phone App**
Idle	I dL	Idle
Constant Fan	FAn	Constant Fan
Compressor Cooling	uAC	Compressor Cooling
Compressor Heat	uAP	Compressor Heat
Gas Heat, Low Stage	GH 1	Gas Heat, Low Stage
Gas Heat, High Stage	GH2	Gas Heat, High Stage
Defrost, Low Stage Gas Heat	dF 1	Defrost, Low Stage Gas Heat
Defrost, High Stage Gas Heat	dF2	Defrost, High Stage Gas Heat
Single-Stage AC, Legacy 2-Stage		
Name	**7-Segment Display**	**Cloud / Phone App**
Idle	I dL	Idle
Constant Fan	FAn	Constant Fan
Compressor Cooling, Low Stage	1AC	Compressor Cooling, Low Stage
Compressor Cooling, High Stage	2AC	Compressor Cooling, High Stage
Compressor Cooling, Single Stage	AC	Compressor Cooling, Single Stage
Compressor Heat, Low Stage	1AC	Compressor Heat, Low Stage
Compressor Heat, High Stage	2AC	Compressor Heat, High Stage
Compressor Heat, Single Stage	AC	Compressor Heat, Single Stage
Gas Heat, Low Stage	GH 1	Gas Heat, Low Stage
Gas Heat, High Stage	GH2	Gas Heat, High Stage
Defrost, Low Stage Gas Heat	dF 1	Defrost, Low Stage Gas Heat
Defrost, High Stage Gas Heat	dF2	Defrost, High Stage Gas Heat
Humidifier, De-Humidifier and Ventilator		
Name	**7-Segment Display**	**Cloud / Phone App**
Humidifier	HUd	Humidifier
De-Humidifier	dHU	De-Humidifier
Ventilator	uEL	Ventilator

TROUBLESHOOTING

Furnace			
Name/Cloud/Phone App	**7 Segment Display**	**User Modifiable Options**	**Comments**
Last 6 Faults	LbF	N/A	Views the control last 6 history faults.
Learn Menu	Lrn	Yes or No.	Resets communication network.
Code Release No	Cr	N/A	Views the control firmware revision number and Shared Data number.
Shared Data Revision	Sr	N/A	Views the control Shared Data revision number and shared data upload.
Reset To Factory Default	rFd	Yes or No.	Reset the furnace setting to factory defaults.
Constant Fan Speed	FSd	Adjustable between 25% to + 100% with 10% ingrements. Default is 25%.	Select the indoor blower airflow at constant fan mode.
Gas Heating Airflow	gAF	Adjustable between Min and Max. Min, Max, Step and Default are defined in Shared Data.	Select the indoor blower airflow multiplier for gas heat operation.
Gas Heat Off Delay	gFd	Adjustable between 90 seconds to 180 seconds with 30 seconds increments. Default is 90 seconds.	Selects the indoor blower heat off delay.
Gas Heat On Delay	gnd	Adjustable between 5 seconds to 30 seconds with 5 seconds increments. Default is 30 seconds.	Selects the indoor blower heat off delay.
Gas Heat Trim Factor	gtF	Adjustable between -10% to +10% with 2% increments. Default is 0%.	Trims the heating airflow by the selected amount.
Gas Heat Stage Multiplier	gSt	Adjustable between Min and Max. Min, Max, Step and Default are defined in Shared Data.	Selects gas heat stage multiplier
Gas Pressure Test	gPt	Yes or No.	Checks gas valve pressure at 100% firing rate.
Function Enable/Disable	FEd		Not implemented in the initial
Backup Heat Balance Points	gbP	Adjustable between Min and Max. Min, Max, Step and Default are defined in Shared Data.	This menu only shows up when a communicating Heat Pump is detected.
Comfort Setting	CFS	First 5 option values are defined in Shared Data. The 6th option shall be hard-coded in the firmware with other 5 settings. The default value is Option 1.	Provides the 6 comfort setting options for the furnace staging algorithm operation, only shows up when ClimateTalk T-Stat is not connected.
Hum On Enable	HEd	1 ~ 16 options and the default option is 15.	Provides the 16 humidifier enabling options in different operation modes.
Ventilation On Time	vOt	Adjustable between 0 ~ 60 minutes. The default is 0 minute Off).	Adjusts the ventilation on time and turn it on/off.
DeHum Logic	dHL	Hi and Lo. The default is Lo.	Provides the DeHum logic input level for DeHum operation. Only applies when the legacy 24VAC input is active.
Outdoor AC/HP, Single-Stage AC/HP			
Name/Cloud/Phone App	**7 Segment Display**	**User Modifiable Options**	**Comments**
Tonnage	ton	Adjustable between 1 to 6 ton with 0.1 increments. Default is 3 ton.	Only visible when communicating outdoor unit is not detected.
Cool Trim Factor	CtF	Adjustable between -10% to +10% with 2% increments. Default is 0%.	Trims the cooling airflow by the selected amount.
Cool Airflow Profile	CAP	A(1), B(2), C(3), D(4 or 5)	Select cooling airflow profiles.
Cool On Delay	Cnd	Adjustable between 5 to 30 seconds with 5 seconds increments. Default is 5 seconds.	Selects the cooling on delay.
Cool Off Delay	CFd	Adjustable between 30 to 120 seconds with 30 seconds increments. Default is 60 seconds.	Selects the cooling off delay.
Cool Stage Multiplier	CSt	Adjustable between 60% to + 100% with 1% increments. Default is 70%.	Selects stage multiplier for 2-stage OD unit.
Defrost Gas Heat Stage	dHS	1 or 2	Selects the gas heat stage for defrost operation.
Compressor Balance Points	CbP	Adjustable and defined in Shared Data	Provides the compressor balance point options for HP operation.
HP Trim Factor	HtF	Adjustable between -10% to +10% with 2% increments. Default is 0%.	Trims the heating airflow by the selected amount.
HP On Delay	Hnd	Adjustable between 5 to 30 seconds with 5 seconds increments. Default is 5 seconds.	Selects the HP heating on delay.
HP Off Delay	HFS	Adjustable between 30 to 120 seconds with 30 seconds increments. Default is 60 seconds.	Selects the HP heating off delay
HP Stage Multiplier	HSt	Adjustable between 70% to 100% with 5% increments. Default is 70%.	Select stage multiplier for 2-stage OD unit.

TROUBLESHOOTING

Push Button Menu Options

ClimateTalk Comm Outdoor 2-Stage AC/HP			
Name/Cloud/Phone App	**7 Segment Display**	**User Modifiable Options**	**Comments**
Cool Trim Factor	CtF	-10%, -8%,-6%, -4%, -2%, 0%, 2%, 4%, 6%, 8%,10%	Trims the cooling airflow by the selected amount.
Cool Airflow Profile	CAP	A, B, C, D	Select cooling airflow profiles.
Cool On Delay	Cnd	5, 10, 20, 30	Selects the cooling on delay.
Cool Off Delay	CFd	30, 60, 90, 120	Selects the cooling off delay.
Dehumidifcation Enable	dHE	ON, OFF	Enables the dehum function for OD operation.
Defrost Gas Heat Stage	dHS	1 or 2	Selects the gas heat stage for defrost operation.
Compressor Balance Points	CbP	Adjustable and defined in Shared Data	Selects the compressor balance point options for HP operation.
HP Trim Factor	HtF	-10%, -8%,-6%, -4%, -2%, 0%, 2%, 4%, 6%, 8%,10%	Trims the heating airflow by the selcted amount
HP On Delay	Hnd	5, 10, 15	Selects the HP heating on delay.
HP Off Delay	HFd	30, 50, 70, 90	Selects the HP heating off delay.
HP Defrost Interval	Hdi	30, 60, 90, 120	Provides the defrost options for compressor heating operation.
Compressor Delay	CdL	0, 5, 15, 30	Provides the compressor delay options for heating operation.
History Fault and Clear	FCL	Yes or No.	Views the comm outdoor history and clear the outdoor unit history fault.
ClimateTalk Comm Outdoor Inverter AC/HP			
Name/Cloud/Phone App	**7 Segment Display**	**User Modifiable Options**	**Comments**
Boost Mode	bSt	On or Off	Provides the options for inverter boot operation.
Boost Temp	btt	On(Always), 70F, 75F, 80F, 85F, 90F, 95F, 100F, 105F	Provides the 9 temperature options for boot operation.
Set Max Current	SCt	OFF, 40%, 50%, 60%, 70%, 80%, 90%	Selects Max Current options
Vertical Rise	utr	SL (Same Level), OL (Outdoor Lower), IL (Indoor Lower)	Selects the level of outdoor vas indoor equipment.
System Reset Menu	Srt	Yes or No.	Reset all outdoor unit settings to factory default.
System Verification Test	Sut	On or Off	Runs System Verification Test after Installation.
Pump Down	PPd	On or Off	Enters Pump Down mode.
Charge Mode	Crg	On or Off	Enters charge mode.
Cool-Trim Factor - High	CtH	-15, -12, -9, -6, -3, 0, 3, 6, 9, 12, 15	Trims the cooling airflow by the selected amount.
Cool-Trim Factor - Intermediate	Cti	-15, -12, -9, -6, -3, 0, 3, 6, 9, 12, 15	Trims the cooling airflow by the selected amount.
Cool-Trim Factor - Low	CtL	-15, -12, -9, -6, -3, 0, 3, 6, 9, 12, 15	Trims the cooling airflow by the selected amount.
Cool Airflow Profile	CAP	A, B, C, D	Select cooling airflow profiles.
Cool On Delay	Cnd	5, 10, 20, 30	Selects the cooling on delay.
Cool Off Delay	CFd	30, 60, 90, 120	Selects the cooling off delay.
Dehum Enable	dHE	On or Off	Enables the dehum function for compressor operation.
Cool Reset Menu	CLr	Yes or No.	Resets all cooling settings to factory default.
Cool Max RPS Range	CrP	01(58 to 62.5 RPS), 02(63 to 67.5 RPS), 03(68RPS), 04(68.5 to 73 RPS), 05(73.5 to 78 RPS)	Selects the appropriate range for the installed system configuration.
Cool Max RPS Selection	CrS	10 RPS values from inverter	Selects the appropriate compressor RPS for the installed system configuration.
Defrost Gas Heat Stage	dHS	1 or 2	Selects the gas heat stage for defrost operation.
Compressor Balance Points	CbP	Adjustable and defined in Shared Data	Provides the compressor balance point options for HP operation.
Force Defrost	Fdd	On or Off	
HP Trim Factor - High	HtH	-15, -12, -9, -6, -3, 0, 3, 6, 9, 12, 15	Trims the heating airflow by the selected amount.
HP Trim Factor - Intermediate	Hti	-15, -12, -9, -6, -3, 0, 3, 6, 9, 12, 15	Trims the heating airflow by the selected amount.
HP Trim Factor - Low	HtL	-15, -12, -9, -6, -3, 0, 3, 6, 9, 12, 15	Trims the heating airflow by the selected amount.
HP On Delay	Hnd	5, 10, 20, 30	Selects the HP heating on delay.
HP Off Delay	HFd	30, 60, 90, 120	Selects the HP heating on delay.
HP Defrost Interval	dFi	Maximum amount of compressor runtime before defrost occurs.	Provides the defrost options for compressor heating operation.
HP Reset Menu	Hrt	Yes or No.	Resets all heating settings to factory default.
HP Max RPS Range	HrP	01(58 to 62.5 RPS), 02(63 to 67.5 RPS), 03(68RPS), 04(68.5 to 73 RPS), 05(73.5 to 78 RPS)	Selects the appropriate range for the installed system configuration.
HP Max RPS Selection	HrS	10 RPS values from inverter	Selects the appropriate compressor RPS for the installed system configuration.
History Fault and Clear	FCL	Yes or No.	Views the comm outdoor history and clear the outdoor unit history fault.

TROUBLESHOOTING

Symptoms of Abnormal Operation	Diagnostic / Status LED Codes	Fault Description	Possible Causes	Corrective Actions	Notes & Cautions
• Furnace fails to operate. • Integrated control module LED display provides no signal.	None	• No 115 power to furnace or no 24 volt power to integrated control module. • Blown fuse or tripped circuit breaker. • Integrated control module is nonfuntional.	• Manual disconnect switch turned OFF, door switch open or 24 volt wire improperly connected or loose sense circuit. • Furnace electrical supply shared with other devices. • Integrated control module is non-functional.	• Check 115 power to furnace and integrated control module. • Check for possible shorts in 115 circuit. Repair as necessary. • Replace non-functional integrated control module.	• Turn power OFF prior to repair. • Read precautions in "Electrostatic Discharge" section manual. • Replace control with correct replacement part.
• LED display indicates Idl	Idl	• Idle	• Normal operation	• None	• Normal operation
• Furnace fails to operate. • Integrated control module LED display provides EED error code.	EEd	• Furnace lockout due to an excessive number of ignition "retries" (3 total).	• Failure to establish flame. Cause may be no gas to burners, front cover pressure switch stuck open, bad igniter or igniter alignment, improper orifces, or coated/oxidized or improperly connected fame sensor. • Loss of fame after establishment. Cause may be interupted gas supply, lazy burner fames (improper gas pressure or restriction in fue and/or combustion air piping), front cover pressure switch opening, or improper induced draft blower performance.	• Locate and correct gas interruption. • Check front cover pressure switch operation (hose, wiring, contact operation). Correct if necessary. • Replace or realign igniter. • Check fame sense signal. Sand sensor if coated and/or oxidized. • Check fue piping for blockage, proper length, elbows, and termination. • Verify proper induced draft blower performance.	• Turn power OFF prior to repair. • Igniter is fragile, handle with care. • Clean fame sensor with steel wool. • See "Vent/Flue Pipe" section for piping details.
• Furnace fails to operate. • Integrated control module LED display provides EE1 error code.	EE 1	• Low stage pressure switch circuit is closed at start of heating cycle.	• Low stage pressure switch contacts sticking. • Shorts in pressure switch circuit wiring.	• Replace low stage pressure switch. • Repair short in wiring.	• Turn power OFF prior to repair. • Replace pressure switch with proper replacement part.
• Induced draft blower runs continously with no further furnace operation. • Integrated control module LED display provides EE2 error code.	EE2	• Low stage pressure switch circuit is not closed.	• Pressure switch hose blocked pinched, or connected improperly. • Blocked fue and/or inlet air pipe, blocked drain sytem or weak induced draft blower. • Incorrect pressure switch set point or malfunctioning switch contacts. • Loose or improperly connected wiring.	• Inspect pressure switch hose. Repair/replace if necessary. • Inspect fue and/or inlet air piping for blockage, proper length, elbows, and termination. Check drain system. Correct as necessary. • Correct pressure switch set point or contact motion. • Tighten or correct wiring connection.	• Turn power OFF prior to repair. • Replace pressure switch with proper replacement part. • Replace induced draft blower with proper replacement part.
• Circulator blower runs continuously. No furnace operation. • Integrated control module LED display provides EE3error code.	EE3	• Primary limit circuit is open.	• Insufficient conditioned air over the heat exchanger. Blocked filters, restrictive duct work, improper circulator blower speed, or failed circulator blower motor. • Loose or improperly connected wiring in high limit circuit.	• Check filters and ductwork for blockage. Clean filters or remove obstruction. • Check circulator blower speed and performance. Correct speed or replace blower motor if necessary. • Tighten or correct wiring connection.	• Turn power OFF prior to repair. • See Specification Sheet applicable to your model* for allowable rise range and proper circ lator speed.
• Induced draft blower and circulator blower runs continuously. No furnace operation. • Integrated control module LED display provides EE4 error code.	EE4	• Flame sensed with no call for heat.	• Short to ground in fame sense circuit. • Lingering burner fame. • Slow closing gas valve.	• Correct short at fame sensor or in fame sensor wiring. • Check for lingering fame. • Verify proper operation of gas valve.	• Turn power off to repair.

TROUBLESHOOTING

Symptoms of Abnormal Operation	Diagnostic / Status LED Codes	Fault Description	Possible Causes	Corrective Actions	Notes & Cautions
• No furnace operation. • Integrated control module LED display provides EE5 error code.	EE5	• Flame sensed with no call for heat.	• Short in low voltage wiring.	• Locate and correct short in low voltage wiring.	• Turn power OFF prior to repair. • Replace fuse with 3-amp automotive type.
• Normal furnace operation with weak flame signal. • Integrated control module LED display provides EE6 error code.	EE6	• Flame sense micro amp signal is low.	• Short in low voltage wiring.	• Clean flame sensor if coated/ oxidized. • Inspect for proper sensor alignment. • Check inlet air piping for blockage, proper length, elbows, and termination. • Compare current gas pressure to rating plate. Adjust as needed.	• Turn power OFF prior to repair. • Clean flame sensor with steel wool. • See "Vent/Flue Pipe" section for piping details . • See rating plate for proper gas pressure.
• Furnace fails to operate. • Integrated control module LED display provides EE7 error code.	EE7	• Problen with igniter circuit.	• Improperly connected igniter. • Shorted igniter. • Poor unit ground. • Igniter relay fault on integrated control module.	• Check and correct wiring from integrated control module to igniter. • Replace shorted igniter. • Check and correct unit ground wiring. • Check igniter output from control. Replace if necessary.	• Turn power OFF prior to repair. • Replace igniter with correct replacement part. • Replace control with correct replacement part.
• Furnace fails to operate on high stage; furnace operates normally on low stage. • Integrated control module LED display provides EE8 error code.	EE8	• High stage pressure switch circuit is closed at start of heating cycle. • Induced draft blower is operating. • Furnace is operating on low stage only.	• High stage pressure switch contacts sticking. • Shorts in pressure switch circuit wiring.	• Replace high stage pressure switch. • Repair short in wiring.	• Turn power OFF prior to repair. • Replace pressure switch with proper replacement part.
• Furnace fails to operate on high stage; furnace operates normally on low stage. • Integrated control module LED display provides EE9 error code.	EE9	• High stage pressure switch circuit is not closed. • Induced draft blower is operating. • Furnace is operating on low stage only.	• Pressure switch hose blocked pinched, or connected improperly. • Blocked flue and/or inlet air pipe, blocked drain system or weak induced draft blower. • Incorrect pressure switch set point or malfunctioning switch contacts. • Loose or improperly connected wiring.	• Inspect pressure switch hose. Repair/replace if necessary. • Inspect flue and/or inlet air piping for blockage, proper length, elbows, and termination. Check drain system. Correct as necessary. • Check induced draft blower performance. Correct as necessary. • Correct pressure switch set point or contact motion. • Tighten or correct wiring connection.	• Turn power OFF prior to repair. • Replace pressure switch with proper replacement part. • Replace induced draft blower with proper replacement part.
• Furnace fails to operate. • Integrated control module LED display provide EEr error code.	EEr	• Polarity of 115 volt AC is reversed.	• Polarity of 115 volt AC power to furnace or integrated module is revered. • Poor unit ground.	• Review wiring diagram to correct polarity. • Verify proper ground. Correct if necessary. • Check and correct wiring.	• Turn power OFF prior to repair.
• Furnace fails to operate. • Integrated control module LED display provide EEb error code.	EEb	• Gas valve is not energized when it should be. • External Gas Valve Error.	• Miswired gas valve circuit. • Open gas valve circuit. • Gas valve relay on integrated control board stuck open.	• Check wiring in gas valve circuit. • Replace integrated control board.	• Turn power OFF prior to repair.

TROUBLESHOOTING

Symptoms of Abnormal Operation	Diagnostic / Status LED Codes	Fault Description	Possible Causes	Corrective Actions	Notes & Cautions
• Furnace fails to operate. • Integrated control module LED display provides EEC error code.	EEC	• Gas valve is energized when it should not be. • Internal Gas Valve	• Miswired gas valve circuit • Shorted gas valve wiring • Gas valve relay on integrated control board stuck open	• Check wiring in gas valve circuit • Replace integrated control board	• Turn power OFF to repair.
• Furnace fails to operate. • Integrated control module LED display provides EEd error code.	EEd	• Aux limit switch open (blower compartment)	• 115 volt power supply was shut off during heat cycle. • Insuffcient conditioned air over the heat exchanger. Blocked filters, restrictive ductwork, improper circulator blower speed, or failed circulator blower motor.	• Check filters and ductwork for blockage. Clean filters or remove obstruction. • Check circulator blower speed and performance. Correct speed and replace blower motor if necessary. • Tighten or correct wiring connection.	• Turn power OFF prior to repair. • See specification Sheet applicable to your model* for allowable rise range and proper circulator speed.
• Furnace fails to operate. • Integrated control module LED display provides EEF error code.	EEF	• Aux switch (condensate switch) open	• High water level in the evaporation coil	• Check evap drain pan, trap, piping.	• Turn power OFF prior to service.
• Furnace fails to operate. • Integrated control module LED display provides E10error code.	E10	• Grounding Fault	• Poor neutral connection	• Verify neutral wire connection to furnace & continuity to ground source.	• Turn power OFF prior to service.
• Furnace fails to operate. • Integrated control module LED display provides E11error code.	E11	• Open rollout switch	• Gas pressure too high • Burners mis-aligned • Restricted heat exchanger or venting	• Check / correct gas pressure • Check / correct burner alignment • Check / correct restriction	• Turn power OFF prior to service.
• Furnace fails to operate. • Integrated control module LED display provides Ed0 error code.	Ed0	• Data not yet on network.	No Network Data	• Populate shared data set using the CoolCloudHVAC App	• Turn power OFF prior to repair. • Use the CoolCloudHVAC App to download the shared data set to the furnace. • Error code will be cleared once data is downloaded.
• Operation different than expected or no operation. • Integrated control module LED display provide Ed1 error code.	Ed1	• Invalid shared data	• Shared data set is invalid. Use the CoolCloudHVAC App to download the shared data to the furnace.	• Verify shared data set is correct for the specific model. Re-populate data using the CoolCloudHVAC App.	• Turn power OFF prior to repair. • Error code will be cleared once data is downloaded from the CoolCloudHVAC App.
• Furnace fails to operate. • Integrated control module LED display provides Eb0 error code.	Eb0	• Circulator blower motor is not running when it should be running.	• Loose wiring connection at circulator motor power leads or circulator motor power leads disconnected. • Open circuit in inductor or loose wiring connection at inductor (3/4 Hp and 1 Hp models only). • Failed circulator blower motor.	• Tighten or correct wiring connection. • Verify continuous circuit through inductor. Replace if open or short circuit. • Check circulator blower motor. Replace if necessary.	• Turn power OFF prior to repair. • Replace inductor with correct replacement part. • Replace circulator motor with correct replacement part.

TROUBLESHOOTING

Symptoms of Abnormal Operation	Diagnostic / Status LED Codes	Fault Description	Possible Causes	Corrective Actions	Notes & Cautions
• Furnace fails to operate. • Integrated control module LED display provides Eb1 error code.	Eb1	• Integrated control module has lost communications with circulator blower.	• Loose wiring connection at circulator motor control leads. • Failed circulator blower motor. • Failed integrated control module.	• Tighten or correct wiring connection. • Check circulator blower motor. Replace if necessary. • Check integrated control module. Replace if necessary.	• Turn Power OFF prior to repair. • Replace circulator motor with correct replacement part. • Replace integrated control module with correct replacement part.
• Furnace fails to operate. • Integrated control module LED display provides Eb2 error code.	Eb2	• Circulator blower motor horsepower in shared data set does not match circulator blower motor horsepower.	• Incorrect circulator blower motor in furnace. • Incorrect shared data set in integrated control module.	• Verify circulator blower if motor horsepower is the same specified for the specific furnace model. Replace if necessary. • Verify shared data set is correct for the specific model. Re-populate data using the CoolCloudHVAC App if required.	• Turn Power OFF prior to repair. • Replace motor with correct replacement part. • Error code will be cleared once shared data and motor horsepower match.
• Furnace operates at reduced performance. • Airflow delivered is less than expected. • Integrated control module LED display provides Eb3 error code.	Eb3	• Circulator blower motor is operating in a power, temperature, or speed limiting condition.	• Blocked filters • Restrictive ductwork • Undersized ductwork • High ambient temperatures	• Check filters for blockage. Clean filters or remove obstruction. • Check ductwork for blockage. Remove obstruction. Verify all registers are fully open. • Verify ductwork is appropriately sized for system. Resize/replace ductwork if necessary.	• Turn Power OFF prior to repair.
• Furnace fails to operate • Integrated Control Module LED display provides ECF error code	ECF		• No power to gas valve	• Verify voltage to Gas Valve	• Turn Power OFF prior to repair
• Furnace fails to operate. • Integrated control module LED display provides Eb4 error code.	Eb4	• Circulator blower motor senses a loss of rotor control. • Circulator blower motor senses high current.	• Abnormal motor loading, sudden change in speed or torque, sudden blockage of furnace air inlet/outlet	• Check filters, filter grills/ registers, duct system, and furnace air inlet/outlet for blockages.	• Turn pow er OFF prior to repair
• Furnace fails to operate. • Integrated control module LED display provides Eb5 error code.	Eb5	• Circulator blow er motor fails to start 10 consecutive times.	• Obstruction in circular blow housing. • Seized circular blower motor bearings • Failed circular blower motor.	• Check circular blow er for obstructions. Remove and repair/replace w heel/motor if necessary	• Turn pow er OFF prior to repair. • Replace motor with correct replacement part. • Replace wheel with correct replacement part.
• Furnace fails to operate. • Integrated control module LED display provides Eb6 error code.	Eb6	• Circulator blower motor shuts down for over or under voltage condition. • Circulator blow er motor shuts dow n due to over temperature condition on pow er module.	• High AC line voltage to furnace. • Low AC line voltace to furnace. • High ambient temperatures.	• Check pow er to furnace. Verify line voltage to furnace is within the range specified on the furnace rating plate.	• Turn pow er OFF prior to repair. • Replace motor w ith correct replacement part. • Use CoolCloud HVAC app to find the specifc model.

TROUBLESHOOTING

Symptoms of Abnormal Operation	Diagnostic / Status LED Codes	Fault Description	Possible Causes	Corrective Actions	Notes & Cautions
• Furnace fails to operate. • Integrated control module LED display provides Eb7 error code.	Eb7	Circulator blow er motor does not have enough information to operate properly. Motor fails to start 40 consecutive times.	• Error w ith integrated control module. Motor has a rotor condition.	• Check integrated control module. Verify control is populated with correct shared data set. See data errors above for details. Check for locked rotor condition (see error code above for details).	• Turn power off prior to repair.
• Furnace operates at reduced performance or operates on low stage w hen high stage is expected. • Integrated control module LED display provides Eb9 error code.	Eb9	Airflow is low er than demanded.	• Blocked filters. • Restrictive ductw ork. • Undersized ductw ork.	• Check filters for blockage. Clean filters or remove obstruction. • Check ductw ork for blockage. Remove obstruction. Verify all registers are fully open. • Verify ductw ork is appropriately sized for system. Resize/replace ductw ork if necessary.	• Turn pow er OFF prior to repair.

TROUBLESHOOTING

TROUBLESHOOTING

ELECTROSTATIC DISCHARGE (ESD) PRECAUTIONS

FOUR WIRE MOTOR TROUBLESHOOTING

Any manual testing of the 4 wire serial communicating motor should only be done with the ULTRACHECK-EZ diagnostic tool (part # UTT-01). All other methods may not be reliable or cause damage to the 4 wire motor.

DIAGNOSTIC CHART

⚠ WARNING

HIGH VOLTAGE !

TO AVOID PERSONAL INJURY OR DEATH DUE TO ELECTRICAL SHOCK, DISCONNECT ELECTRICAL POWER BEFORE PERFORMING ANY SERVICE OR MAINTENANCE.



The 3X 7-segment LED display will display an error code that may contain a letter and number. The error code may be used to assist in troubleshooting the unit.

RESETTING FROM LOCKOUT

Furnace lockout results when a furnace is unable to achieve ignition after three attempts during a single call for heat. It is characterized by a non-functioning furnace and a EE0 code displayed on the dual 7-segment display. If the furnace is in "lockout", it will (or can be) reset in any of the following ways.

1. Automatic reset. The integrated control module will automatically reset itself and attempt to resume normal operations following a one hour lockout period.
2. Manual power interruption. Interrupt 115 volt power to the furnace.
3. Manual thermostat cycle. Lower the thermostat so that there is no longer a call for heat for 1 -20 seconds then reset to previous setting.

NOTE: If the condition which originally caused the lockout still exists, the control will return to lockout. Refer to the *Diagnostic Chart* for aid in determining the cause.

Combustion Quality

Combustion quality can be affected by several factors. Major factors are venting and draining.

Venting

The venting system should be planned and installed with the following in mind;

- Should not be longer than necessary
- Use 45°elbows rather than 90° elbows when possible
- Must not sag or otherwise trap condensate
- Use longest radius fittings possible
- If using 3" venting, make the transition from 2" to 3" as close as practically possible
- Make sure there is no flue gas recirculation into the combustion air pipe

Condensate Drainage

Furnace combustion can be affected if a furnace is holding condensate. Check for proper connections of drain hoses, make sure furnace condensate trap is clean. Make sure furnace is not improperly sloped. Make sure air conditioning coil drain is not interfering with furnace drain.

Other Causes

1. Manifold Gas Pressure must be set for the gas being used, Natural or L.P., high and low firing rates. If converted to L.P. gas, check size of all orifices
2. Remove Draft Inducer, Check the integrity of the gasket between the inducer and the collector box cover, any air leak here will have a negative effect on combustion. Check the orifice hole in the collector box, it must be free of burrs on both sides
3. Make sure burners are clean, not out of position and line up correctly with exchanger tubes, including the heat exchanger orifice plate between the burners and the heat exchanger tubes, make sure it is not loose, missing a screw or hanging down between the burners and heat exchangers causing flame impingement.
4. Make sure the field installed gas line is not binding and causing distortion of burner assembly
5. If the furnace is installed as a one pipe system; make sure the surrounding area and structure are adequate to provide combustion air
6. Make sure there are no cabinet air leaks allowing supply air to affect combustion
7. If heat exchanger integrity is uncertain, follow procedures in Service Bulletin SF-041

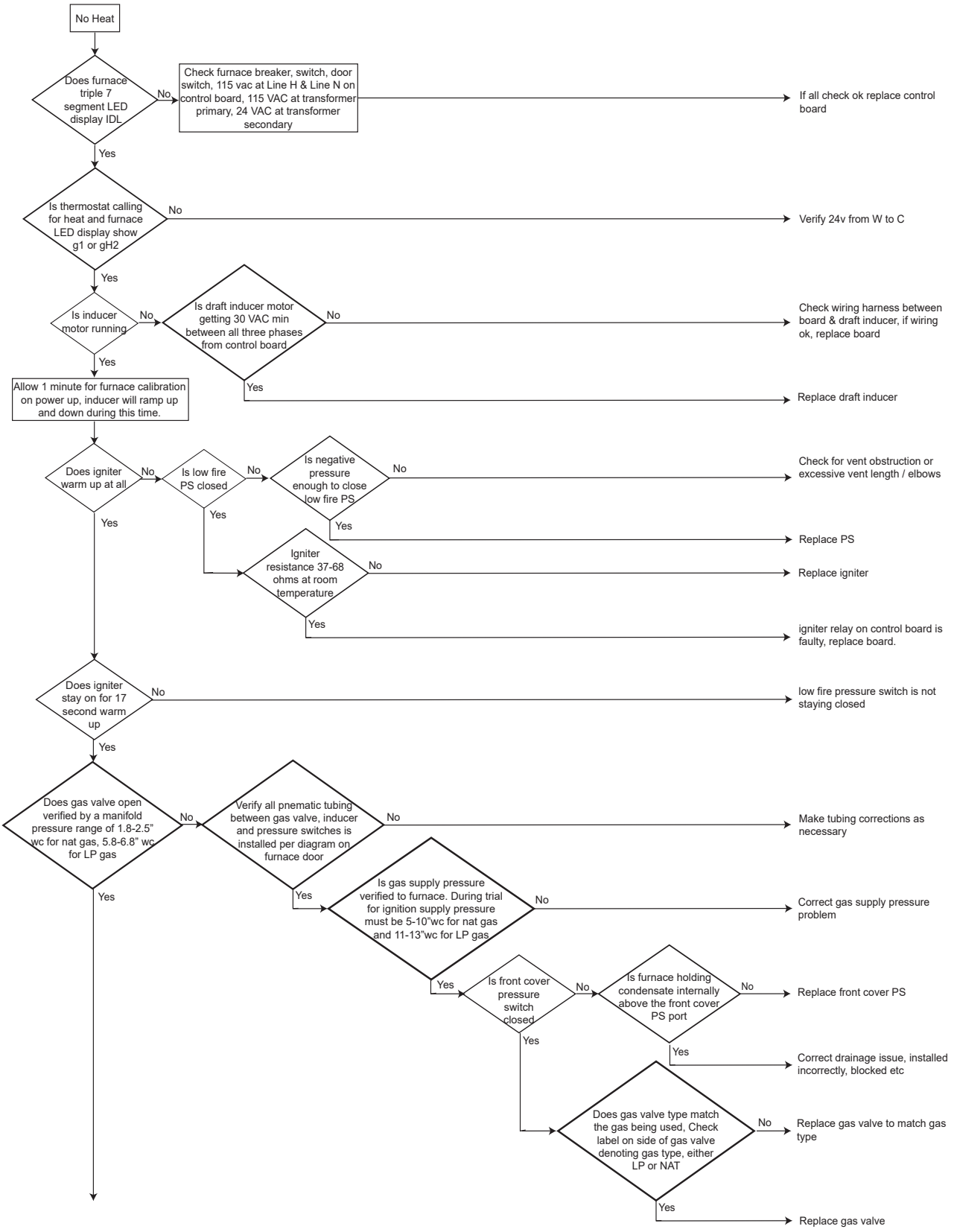
No Heat
Does furnace triple 7 segment LED display IDL
No
Check furnace breaker, switch, door switch, 115 vac at Line H & Line N on control board, 115 VAC at transformer primary, 24 VAC at transformer secondary
If all check ok replace control board
Yes
Is thermostat calling for heat and furnace LED display show g1 or gH2
No
Verify 24v from W to C
Yes
Is inducer motor running
No
Is draft inducer motor getting 30 VAC min between all three phases from control board
No
Check wiring harness between board & draft inducer, if wiring ok, replace board
Yes
Yes
Replace draft inducer
Allow 1 minute for furnace calibration on power up, inducer will ramp up and down during this time.
Does igniter warm up at all
No
Is low fire PS closed
No
Is negative pressure enough to close low fire PS
No
Check for vent obstruction or excessive vent length / elbows
Yes
Yes
Replace PS
Igniter resistance 37-68 ohms at room temperature
No
Replace igniter
Yes
igniter relay on control board is faulty, replace board.
Yes
Does igniter stay on for 17 second warm up
No
low fire pressure switch is not staying closed
Yes
Does gas valve open verified by a manifold pressure range of 1.8-2.5" wc for nat gas, 5.8-6.8" wc for LP gas
No
Verify all pnematic tubing between gas valve, inducer and pressure switches is installed per diagram on furnace door
No
Make tubing corrections as necessary
Yes
Yes
Is gas supply pressure verified to furnace. During trial for ignition supply pressure must be 5-10"wc for nat gas and 11-13"wc for LP gas
No
Correct gas supply pressure problem
Yes
Is front cover pressure switch closed
No
Is furnace holding condensate internally above the front cover PS port
No
Replace front cover PS
Yes
Yes
Correct drainage issue, installed incorrectly, blocked etc
Does gas valve type match the gas being used, Check label on side of gas valve denoting gas type, either LP or NAT
No
Replace gas valve to match gas type
Yes
Replace gas valve

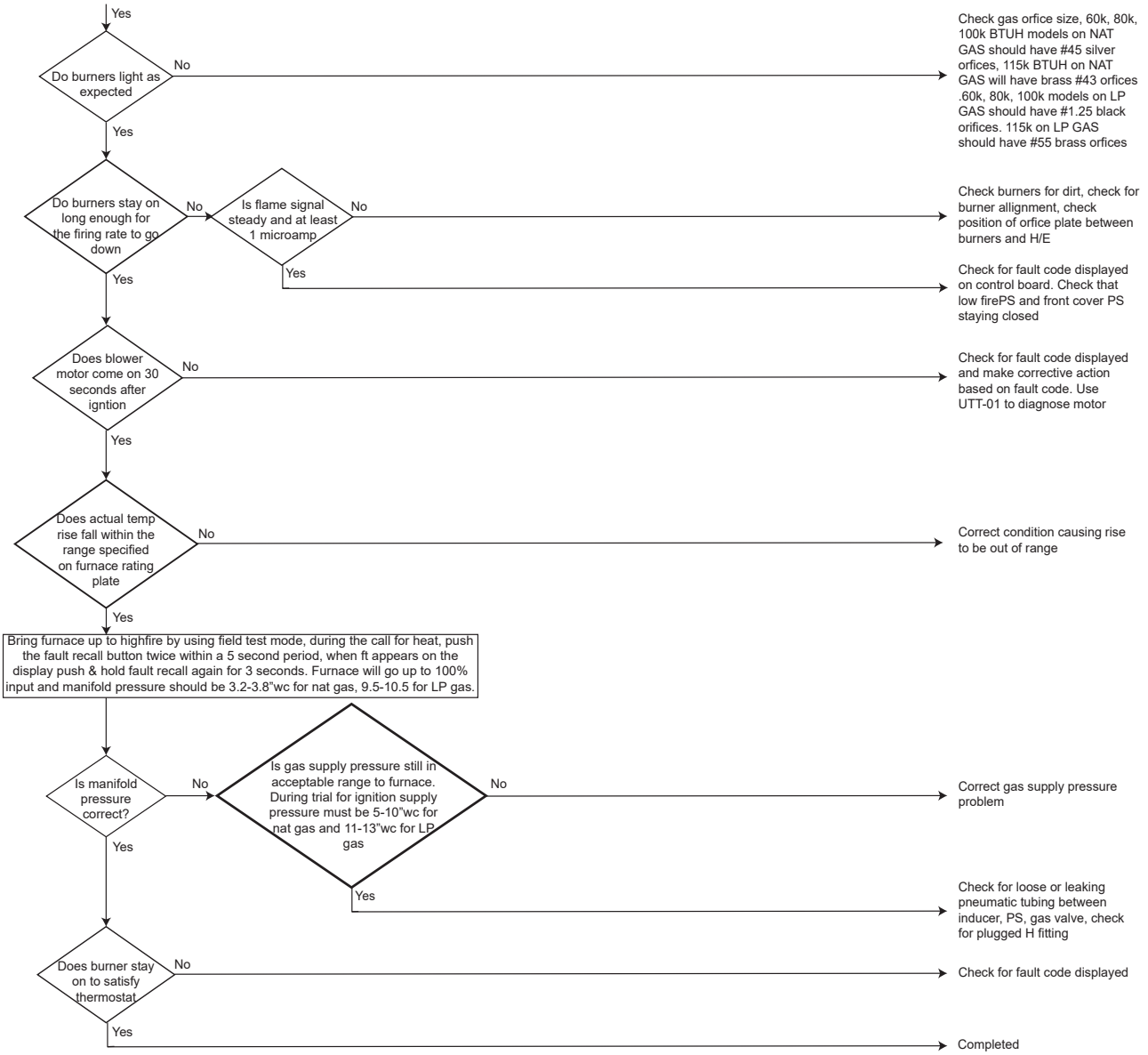
Yes
Do burners light as expected
No
Check gas orfice size, 60k, 80k, 100k BTUH models on NAT GAS should have #45 silver orfices, 115k BTUH on NAT GAS will have brass #43 orfices .60k, 80k, 100k models on LP GAS should have #1.25 black orifices. 115k on LP GAS should have #55 brass orfices
Yes
Do burners stay on long enough for the firing rate to go down
No
Is flame signal steady and at least 1 microamp
No
Check burners for dirt, check for burner allignment, check position of orfice plate between burners and H/E
Yes
Check for fault code displayed on control board. Check that low firePS and front cover PS staying closed
Yes
Does blower motor come on 30 seconds after igntion
No
Check for fault code displayed and make corrective action based on fault code. Use UTT-01 to diagnose motor
Yes
Does actual temp rise fall within the range specified on furnace rating plate
No
Correct condition causing rise to be out of range
Yes
Bring furnace up to highfire by using field test mode, during the call for heat, push the fault recall button twice within a 5 second period, when ft appears on the display push & hold fault recall again for 3 seconds. Furnace will go up to 100% input and manifold pressure should be 3.2-3.8"wc for nat gas, 9.5-10.5 for LP gas.
Is manifold pressure correct?
No
Is gas supply pressure still in acceptable range to furnace. During trial for ignition supply pressure must be 5-10"wc for nat gas and 11-13"wc for LP gas
No
Correct gas supply pressure problem
Yes
Yes
Check for loose or leaking pneumatic tubing between inducer, PS, gas valve, check for plugged H fitting
Does burner stay on to satisfy thermostat
No
Check for fault code displayed
Yes
Completed

Error Code:
B0 - Circulator blower motor not running when it should be running.

B1 - Integrated control module has lost communications with circulator blower motor.

Applicable Models:
(for Goodman Amana)
*MVS-U, *CVC, *MVC, *CVM, *MVM

(for Daikin)
DM**SC-U, DC**VC, DM**VC, DC97MC, DM97MC

Method of Error Detection:
B0 - High voltage to the motor, bad inductor coil, no DC voltage to the motor or no communication to blower motor.
B1 - Bad ground or no communication to blower motor.

Error Decision Conditions:
Primary voltage to blower motor out of range.
Missing DC voltage between pins 1 and 4.

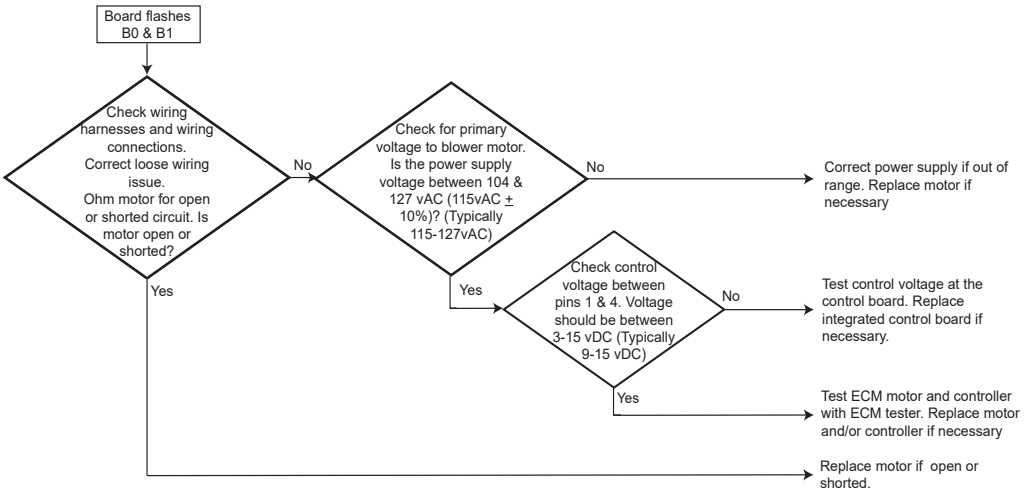

Error Code:
B2 - Circulator blower motor HP in shared data set does not match circulator blower motor HP.

B3 - Circulator blower motor is operating in a power, temperature or speed limiting condition.

B4 - Circulator blower motor senses a loss of rotor control or high current.

B5 - Circulator blower motor fails to start 10 consecutive times.

B6 - Circulator blower motor shuts down due to over or under voltage condition, or over temperature condition.

B9 - Airflow is lower than demanded.

Applicable Models:
(for Goodman/Amana)
*MVS80-U, *MVS96-U, *CVC, *MVC, *CVM97, *MVM97

(for Daikin)
DM**SC-U

Method of Error Detection:
Wrong horsepower blower motor, primary voltage to motor is out of range, high temperature, high amp draw blower motor failure.

Error Decision Conditions:
Wrong horsepower blower motor, primary voltage to motor is out of range, high temperature, high amp draw blower motor failure.

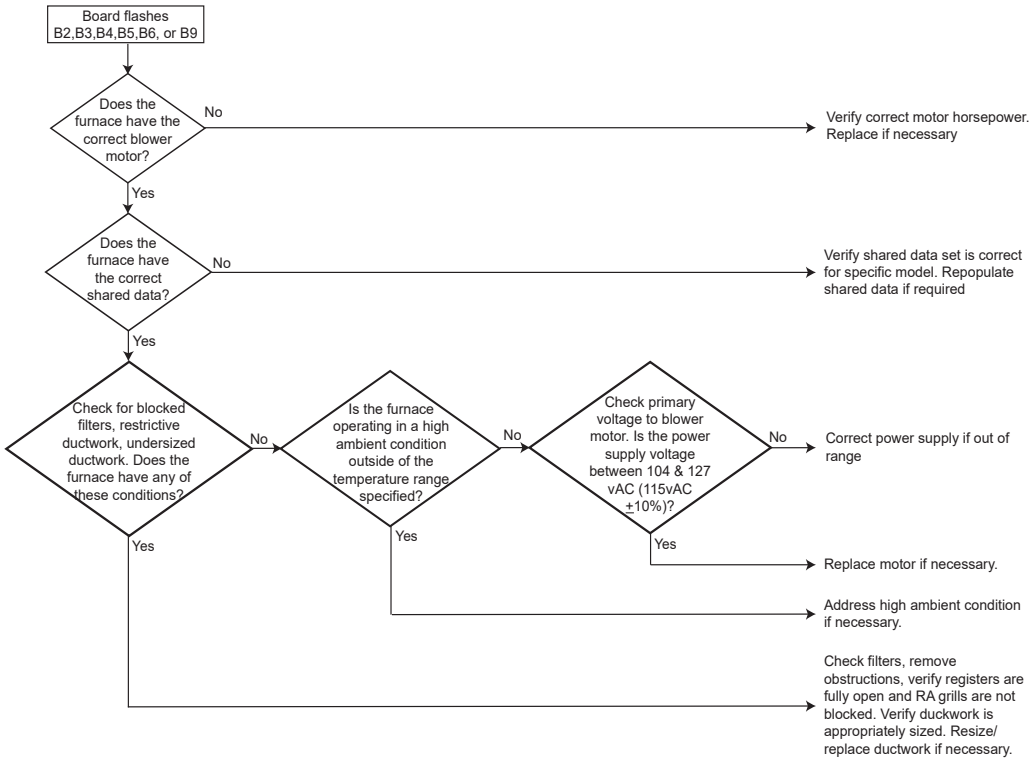

Error Code:
E0 - Lockout due to an excessive number of ignition retries (3 total)

Applicable Models:
All 90% models

Method of Error Detection:
Furnace fails to ignite after 3 retires

Error Decision Conditions:
No gas or low gas pressure at manifold. Bad hot surface ignitor - not glowing, dirty flame sensor

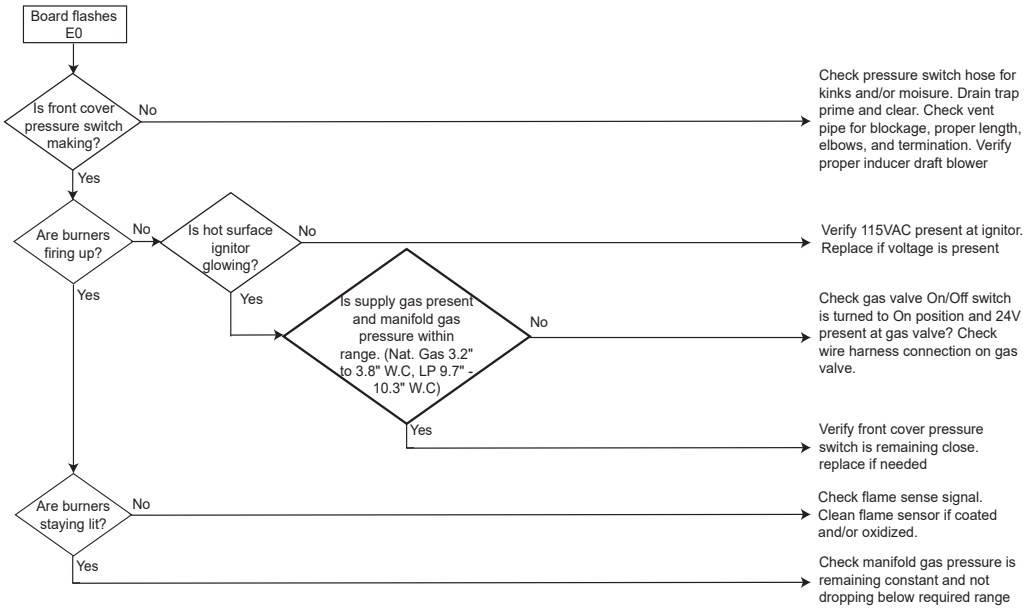

Error Code:
E3 - Primary limit circuit is open.

Applicable Models:
All furnace models

Method of Error Detection:
Temperature across primary limit during heating operation.

Error Decision Conditions:
During heating operation, primary limit break temperature has opened the primary limit circuit.

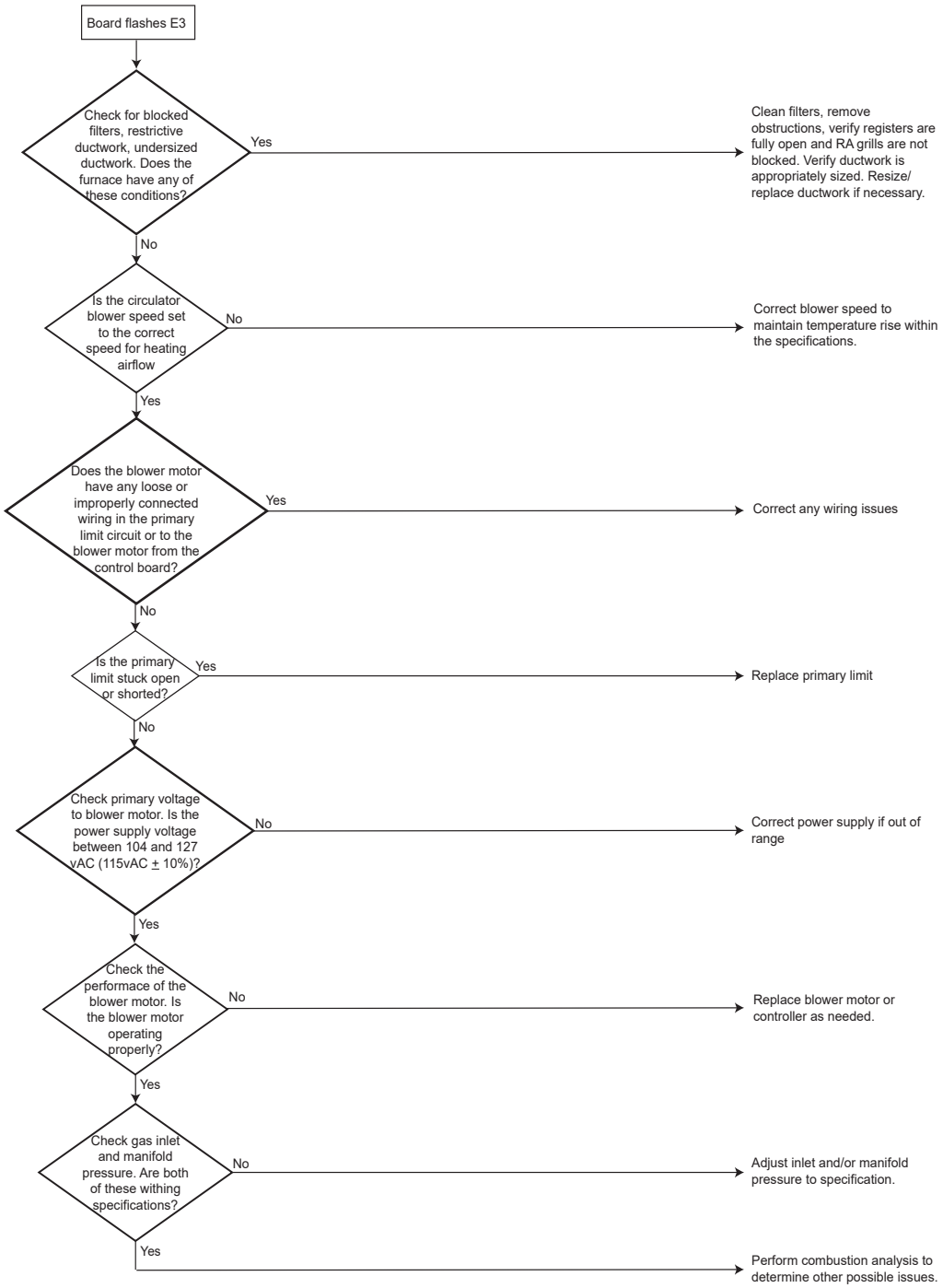

Error Code:
E4 - Flame sensed with no call for heat.

E6 - Flame sense micro amp signal is minimal.

Applicable Models:
All furnace models

Method of Error Detection:
Micro amp signal from flame sensor.

Error Decision Conditions:
Micro amp reading with no call for heat.
Low micro amp reading after furnace ignition.

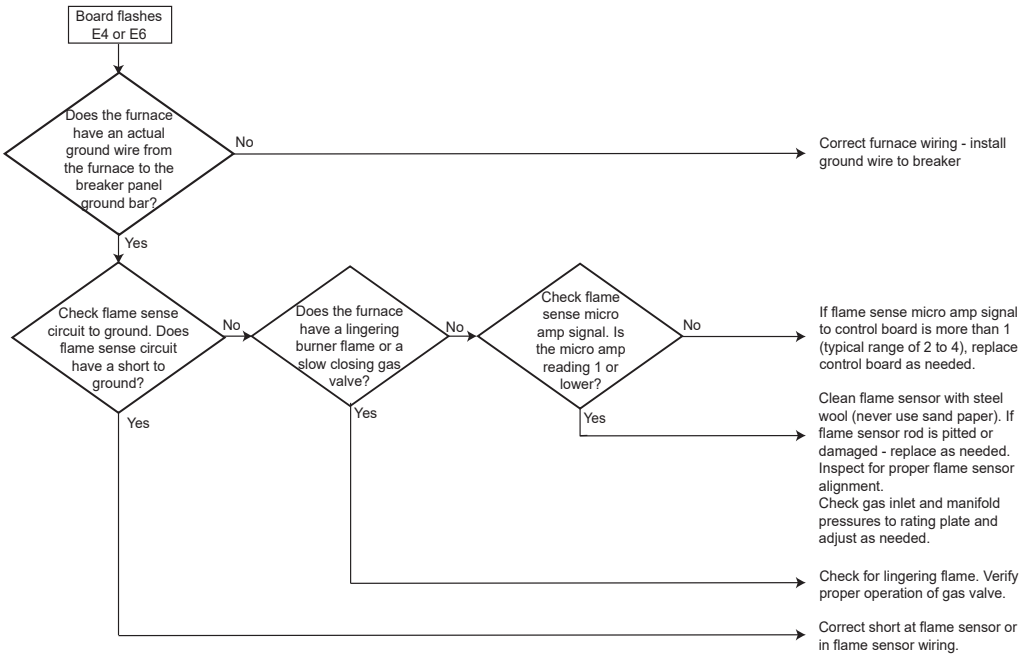

Error Code:
Eb - Gas valve is not energized when it should be. External Gas Valve Error.

EC - Gas valve is energized when it should not be. Internal Gas Valve Error.

Applicable Models:
(for Goodman/Amana)
All furnace models

(for Daikin)
All furnace models, except Daikin modulating furnaces

Method of Error Detection:
No voltage to gas valve when voltage should be present.
Voltage to gas valve with no call for heat.

Error Decision Conditions:
No voltage reading at gas valve with a call for heat.
Voltage reading at gas valve with no call for heat.

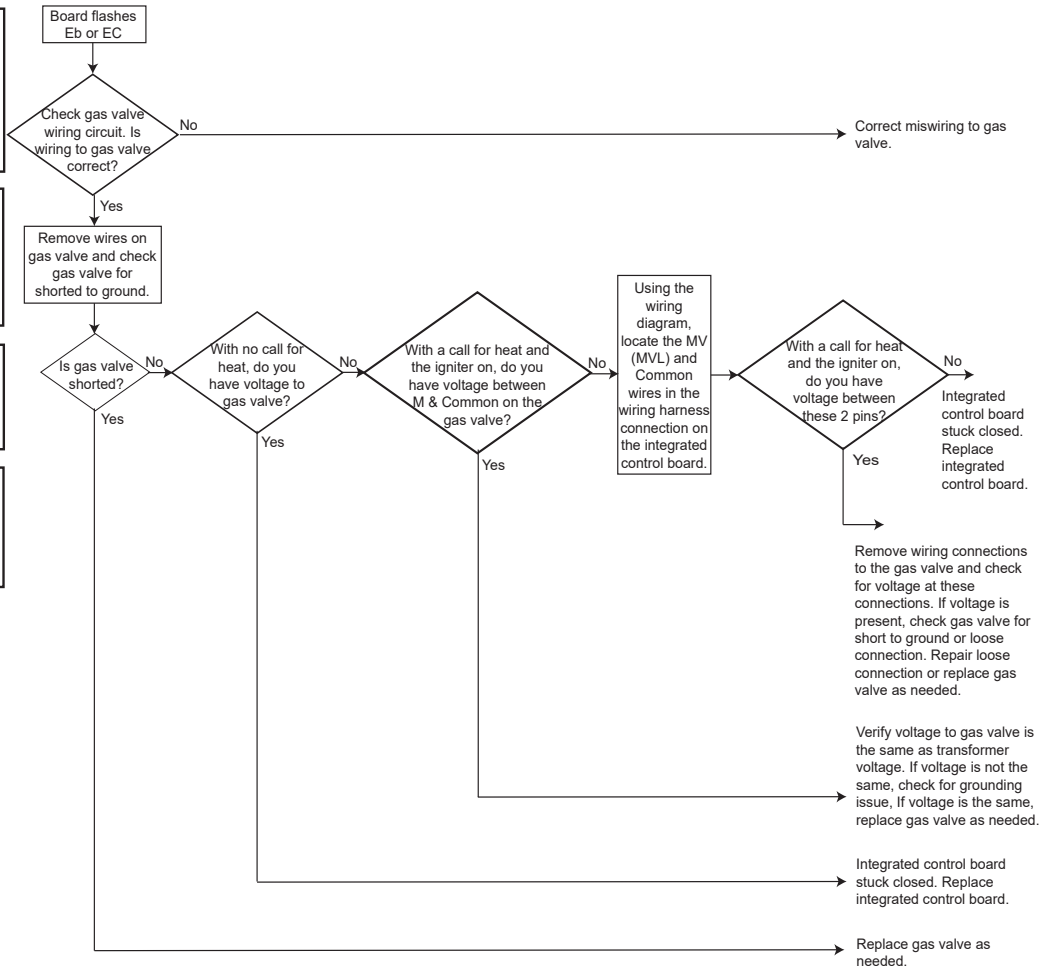

WIRING DIAGRAMS



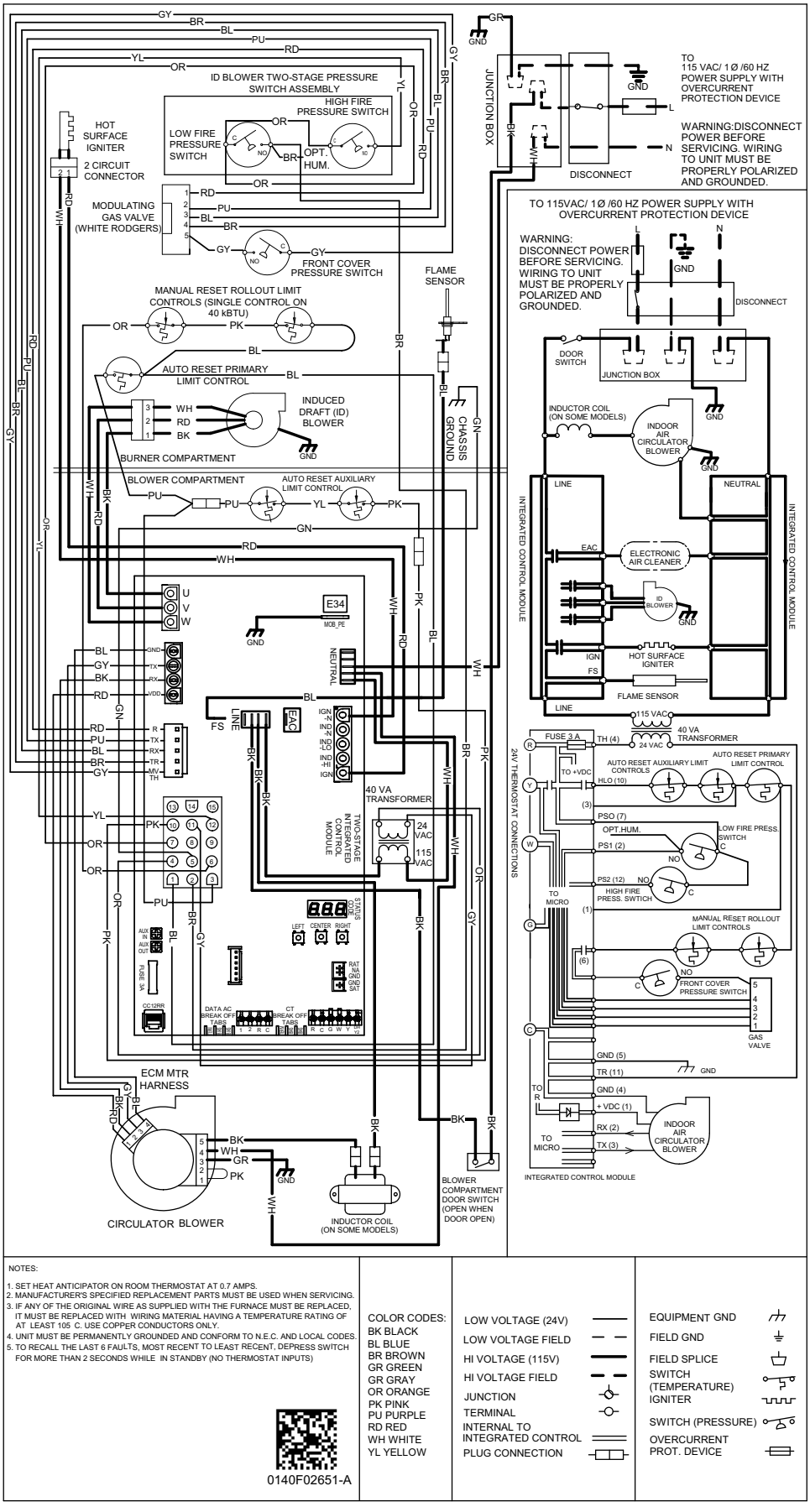

NOTES:

1. SET HEAT ANTICIPATOR ON ROOM THERMOSTAT AT 0.7 AMPS.
2. MANUFACTURER'S SPECIFIED REPLACEMENT PARTS MUST BE USED WHEN SERVICING.
3. IF ANY OF THE ORIGINAL WIRE AS SUPPLIED WITH THE FURNACE MUST BE REPLACED, IT MUST BE REPLACED WITH WIRING MATERIAL HAVING A TEMPERATURE RATING OF AT LEAST 105 C. USE COPPER CONDUCTORS ONLY.
4. UNIT MUST BE PERMANENTLY GROUNDED AND CONFORM TO N.E.C. AND LOCAL CODES.
5. TO RECALL THE LAST 6 FAULTS, MOST RECENT TO LEAST RECENT, DEPRESS SWITCH FOR MORE THAN 2 SECONDS WHILE IN STANDBY (NO THERMOSTAT INPUTS)

0140F02651-A

COLOR CODES:
BK BLACK
BL BLUE
BR BROWN
GR GREEN
GR GRAY
OR ORANGE
PK PINK
PU PURPLE
RD RED
WH WHITE
YL YELLOW

LOW VOLTAGE (24V)
LOW VOLTAGE FIELD
HI VOLTAGE (115V)
HI VOLTAGE FIELD
JUNCTION
TERMINAL
INTERNAL TO INTEGRATED CONTROL
PLUG CONNECTION

EQUIPMENT GND
FIELD GND
FIELD SPLICE
SWITCH (TEMPERATURE)
IGNITER
SWITCH (PRESSURE)
OVERCURRENT PROT. DEVICE

Wiring is subject to change. Always refer to the wiring diagram on the unit for the most up-to-date wiring.