Service Instructions

34.5" Chassis

ACVM97*BA/AMVM97*BA
GCVM97*BA/GMVM97*BA

Modulating
Gas
Furnaces

BA revision & above

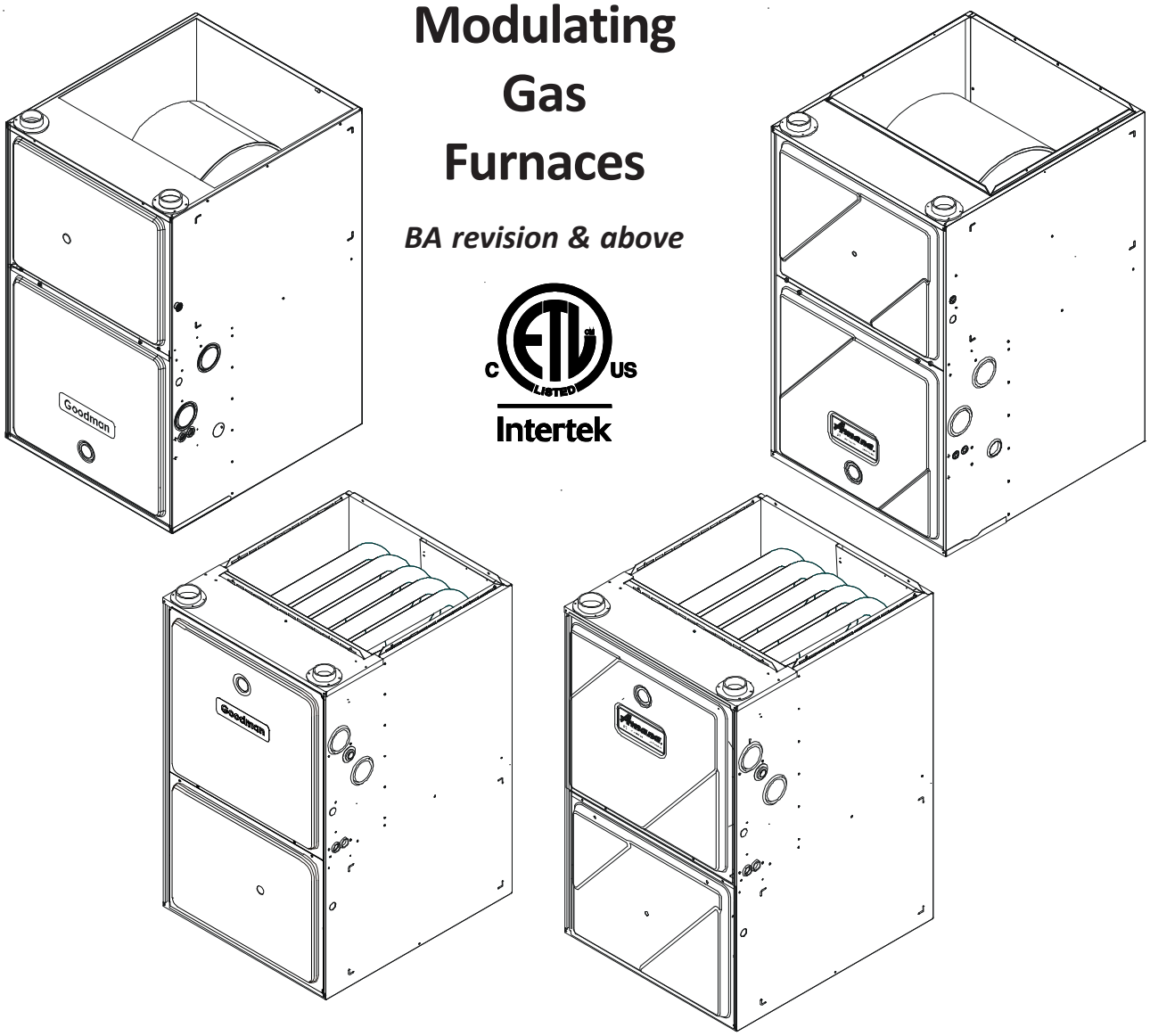

This manual is to be used by qualified, professionally trained HVAC technicians only. Goodman does not assume any responsibility for property damage or personal injury due to improper service procedures or services performed by an unqualified person.

RS6612015
October 2018

The material in this manual does not supercede manufacturer's installation and operation instructions

Amana is a registered trademark of Maytag Corporation or its related companies and is used under license. All rights reserved.

Copyright © 2017 - 2018 Goodman Company, L.P.

TABLE OF CONTENTS

IMPORTANT INFORMATION ..... 2 - 5
PRODUCT IDENITIFICATION ..... 6 - 10
ACCESSORIES ..... 11 - 14
INSTALLATION CONSIDERATIONS ..... 15 - 41
COOL CLOUD HVAC PHONE APPLICATION ..... 42 - 44
SYSTEM OPERATION ..... 45 - 58
TROUBLESHOOTING ..... 59 - 71
SERVICING ..... 72 - 89
SERVICING TABLE OF CONTENTS 75
MAINTENANCE ..... 90 - 91
ACCESSORY WIRING DIAGRAM 92
WIRING DIAGRAM 93

IMPORTANT INFORMATION

Pride and workmanship go into every product to provide our customers with quality products. It is possible, however, that during its lifetime a product may require service. Products should be serviced only by a qualified service technician who is familiar with the safety procedures required in the repair and who is equipped with the proper tools, parts, testing instruments and the appropriate service manual. **REVIEW ALL SERVICE INFORMATION IN THE APPROPRIATE SERVICE MANUAL BEFORE BEGINNING REPAIRS.**

IMPORTANT NOTICES FOR CONSUMERS AND SERVICERS

RECOGNIZE SAFETY SYMBOLS, WORDS AND LABELS

WARNING

THIS UNIT SHOULD NOT BE CONNECTED TO, OR USED IN CONJUNCTION WITH, ANY DEVICES THAT ARE NOT DESIGN CERTIFIED FOR USE WITH THIS UNIT OR HAVE NOT BEEN TESTED AND APPROVED BY THE MANUFACTURER. SERIOUS PROPERTY DAMAGE OR PERSONAL INJURY, REDUCED UNIT PERFORMANCE AND/OR HAZARDOUS CONDITIONS MAY RESULT FROM THE USE OF DEVICES THAT HAVE NOT BEEN APPROVED OR CERTIFIED BY THE MANUFACTURER.

WARNING

ONLY PERSONNEL THAT HAVE BEEN TRAINED TO INSTALL, ADJUST, SERVICE OR REPAIR (HEREINAFTER, "SERVICE") THE EQUIPMENT SPECIFIED IN THIS MANUAL SHOULD SERVICE THE EQUIPMENT. THE MANUFACTURER WILL NOT BE RESPONSIBLE FOR ANY INJURY OR PROPERTY DAMAGE ARISING FROM IMPROPER SERVICE OR SERVICE PROCEDURES. IF YOU SERVICE THIS UNIT, YOU ASSUME RESPONSIBILITY FOR ANY INJURY OR PROPERTY DAMAGE WHICH MAY RESULT. IN ADDITION, IN JURISDICTIONS THAT REQUIRE ONE OR MORE LICENSES TO SERVICE THE EQUIPMENT SPECIFIED IN THIS MANUAL, ONLY LICENSED PERSONNEL SHOULD SERVICE THE EQUIPMENT. IMPROPER INSTALLATION, ADJUSTMENT, SERVICING OR REPAIR OF THE EQUIPMENT SPECIFIED IN THIS MANUAL, OR ATTEMPTING TO INSTALL, ADJUST, SERVICE OR REPAIR THE EQUIPMENT SPECIFIED IN THIS MANUAL WITHOUT PROPER TRAINING MAY RESULT IN PRODUCT DAMAGE, PROPERTY DAMAGE, PERSONAL INJURY OR DEATH.

WARNING

TO PREVENT THE RISK OF PROPERTY DAMAGE, PERSONAL INJURY, OR DEATH, DO NOT STORE COMBUSTIBLE MATERIALS OR USE GASOLINE OR OTHER FLAMMABLE LIQUIDS OR VAPORS IN THE VICINITY OF THIS APPLIANCE.

WARNING

HIGH VOLTAGE

DISCONNECT **ALL** POWER BEFORE SERVICING OR INSTALLING THIS UNIT. MULTIPLE POWER SOURCES MAY BE PRESENT. FAILURE TO DO SO MAY CAUSE PROPERTY DAMAGE, PERSONAL INJURY OR DEATH.

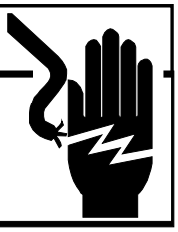

PROP 65 WARNING
FOR CALIFORNIA CONSUMERS

WARNING

Cancer and Reproductive Harm -
www.P65Warnings.ca.gov

0140M00513-A

IMPORTANT INFORMATION

FOR YOUR SAFETY READ BEFORE OPERATING

WARNING

If you do not follow these instructions exactly, a fire or explosion may result causing property damage, personal injury or loss of life.

A. This appliance does not have a pilot. It is equipped with an ignition device which automatically lights the burners. Do not try to light the burners by hand.

B. BEFORE OPERATING smell around the appliance area for gas. Be sure to smell next to the floor because some gas is heavier than air and will settle on the floor.

WHAT TO DO IF YOU SMELL GAS

- Do not try to light any appliance.
- Do not touch any electric switch; do not use any telephone in your building.
- Immediately call your supplier from a neighbor's phone. Follow the gas suppliers instructions.
- If you cannot reach your gas supplier, call the fire department.

C. Use only your hand to move the gas control switch or knob. Never use tools. If the gas control switch or knob will not operate, don't try to repair it, call a qualified service technician. Force or attempted repair may result in a fire or explosion.

D. Do not use this appliance if any part has been under water. Immediately call a qualified service technician to inspect the appliance and to replace any part of the control system and any gas control which has been under water.

WARNING: Improper installation, adjustment, alteration, service or maintenance can cause injury or property damage. Refer to the user's information manual provided with this furnace. For assistance or additional information consult a qualified installer, service agency or the gas supplier.

This furnace must be installed in accordance with the manufacturers instructions and local codes. In the absence of local codes, follow the National Fuel Gas Code, ANSI Z223.1.

OPERATING INSTRUCTIONS

1. STOP! Read the safety information above on this label.
2. Set the thermostat to lowest setting.
3. Turn off all electric power to the appliance.
4. This appliance is equipped with an automatic ignition system which automatically lights the burners. Do not try to light the burners by hand.
5. Remove control access panel.
6. Move the gas control switch or knob to "OFF".

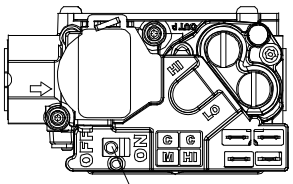

GAS CONTROL SWITCH SHOWN IN "ON" POSITION

7. Wait five (5) minutes to clear out any gas. If you then smell gas, STOP! Follow "B" in the safety information above on this label. If you don't smell gas, go to the next step.
8. Move the gas control switch or knob to "ON".
9. Replace control access panel.
10. Turn on all electric power to the appliance.
11. Set the thermostat to the desired setting.
12. If the appliance will not operate, follow the instructions "To Turn Off Gas To Appliance" and call your service technician or gas supplier.

For indoor installation.

PGB & PGJ
For outdoor installation only.

WARNING: If not installed, operated and maintained in accordance with the manufacturer's instructions, this product could expose you to substances in fuel combustion which can cause death or serious Illness.

This product contains Fiberglass insulation.

TO TURN OFF GAS TO APPLIANCE

1. Set the thermostat to its lowest setting.
2. Turn off all electric power to the appliance if service is to be performed.
3. Remove control access panel.
4. Move the gas control switch or knob to "OFF". Do not force.
5. Replace control access panel.

FOR YOUR SAFETY Do not store or use gasoline or other flammable vapors and liquids in the vicinity of this or any other appliance.

0140F00001P

IMPORTANT INFORMATION

CONSIGNES DÉ SECURITÉ - LIRE AVANT D'ALLUMER L'APPAREIL

AVERTISSEMENT: Le non-respect des instructions qui suivent peut entraîner un risque d'incendie ou d'explosion causant des dommages, des blessures ou la mort.

A. Cet appareil comporte pas de veilleuse. Il est muni d'un mécanisme qui allume automatiquement le brûleur. N'allumez paz le brûleur manuellement.

B. Sentir tout autour de l'appariel AVANT D'ALLUMER afin de déceler toute fuite de gaz. Assurez-vous de sentir tout près du plancher car certains gaz sont plus lourds que l'air et se déposeront sur le plancher.

SI VOUS SENTEZ UNE ODEUR DE GAZ:

- Ne tentez d'allumer aucun appariel.
- Ne touchez pas aux interrupteurs électriques; n'utiliser aucun téléphone dans l'édifice où vous vous trouvez.
- Appelez immédiatement votre fournisseur de gaz en utilisant le téléphone d'un voisin et suivez les instructions du fournisseur.
- Appelez les pompiers si vous ne parvenez pas à rejoindre votre fournisseur de gaz.

C. N'utiliser que votre main pour pousser ou tourner le commande du gaz. N'utilisez jamais d'outils. Si vous ne parvenez pas à pousser ou à tourner la commande, ne tentez pas de la réparer; appelez un réparateur qualifié. Forcer la commande ou essayer de la réparer peut entraîner un risque d'incendie ou d'explosion.

D. N'utilisez pas cet appareil si l'une de ses parties a été dans l'eau. Si cela se produit, demandez immédiatement à un réparateur qualifié d'inspecter l'appareil et de remplacer toute pièce du systeme de contrôle et toute commande de gaz ayant été dans l'eau.

0140F00002P

INSTRUCTIONS DE SERVICE

1. UN INSTANT! Lisez d'abord les consignes de sécurité ci-dessus.
2. Réglez le thermostat à son point le plus bas.
3. Coupez l'alimentation électrique de l'appareil.
4. Cet appareil est muni d'un mécanisme qui allume automatiquement le brûleur. Ne tentez pas d'allumer le brûleur manuellement.
5. Retirez le panneau d'accès de la commande.
6. Mettez la commande de gaz à la position ARRÊT ("OFF").
7. Attendez cinq (5) minutes afin de permettre à tout gaz présent d'être évacué. Si vous sentez une odeur de gaz à ce moment, ARRETÊZ! et suivez les consignes de sécurité données au paragraphe B ci-dessus. Si vous ne sentez pas de gaz, passez à l'étape suivante.
8. Mettez la commande de gaz à la position MARCHE ("ON").
9. Remettez la panneau d'accès de la commande en place.
10. Rétablissez l'alimenation électrique de l'appareil.
11. Réglez le thermostat à le température désirée.
12. Si l'appareil ne fonctionne pas, suivez les instructions intituleés "Arrêt du gaz" et appelez un réparateur qualifie ou votre fournisseur de gaz.

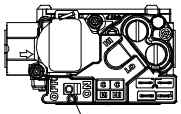

Commande de gaz en position "MARCHE"

ARRÊT DU GAZ

1. Réglez le thermostat à son point le plus bas.
2. Coupez l'alimentation électrique de l'appareil si vous devez effectuer un entretien.
3. Retirez le panneau d'accès de la commande.
4. Mettez la commande de gaz à la position ARRÊT ("OFF").
5. Remettez le panneau d'accès de la commande en place.

IMPORTANT INFORMATION

DANGER
PELIGRO

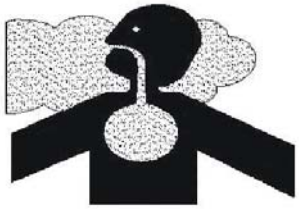

CARBON MONOXIDE POISONING HAZARD

Special Warning for Installation of Furnace or Air Handling Units in Enclosed Areas such as Garages, Utility Rooms or Parking Areas

Carbon monoxide producing devices (such as an automobile, space heater, gas water heater, etc.) should not be operated in enclosed areas such as unventilated garages, utility rooms or parking areas because of the danger of carbon monoxide (CO) poisoning resulting from the exhaust emissions. If a furnace or air handler is installed in an enclosed area such as a garage, utility room or parking area and a carbon monoxide producing device is operated therein, there must be adequate, direct outside ventilation.

This ventilation is necessary to avoid the danger of CO poisoning which can occur if a carbon monoxide producing device continues to operate in the enclosed area. Carbon monoxide emissions can be (re)circulated throughout the structure if the furnace or air handler is operating in any mode.

CO can cause serious illness including permanent brain damage or death. B10259-216

RIESGO DE INTOXICACIÓN POR MONÓXIDO DE CARBONO

Advertencia especial para la instalación de calentadores ó manejadoras de aire en áreas cerradas como estacionamientos ó cuartos de servicio.

Los equipos ó aparatos que producen monóxido de carbono (tal como automóvil, calentador de gas, calentador de agua por medio de gas, etc) no deben ser operados en áreas cerradas debido al riesgo de envenenamiento por monóxido de carbono (CO) que resulta de las emisiones de gases de combustión. Si el equipo ó aparato se opera en dichas áreas, debe existir una adecuada ventilación directa al exterior.

Esta ventilación es necesaria para evitar el peligro de envenenamiento por CO, que puede ocurrir si un dispositivo que produce monóxido de carbono sigue operando en el lugar cerrado.

Las emisiones de monóxido de carbono pueden circular a través del aparato cuando se opera en cualquier modo.

El monóxido de carbono puede causar enfermedades severas como daño cerebral permanente ó muerte. B10259-216

RISQUE D'EMPOISONNEMENT AU MONOXYDE DE CARBONE

Avertissement special au sujet de l'installation d'appareils de chauffage ou de traitement d'air dans des endroits clos, tets les garages, les locaux d'entretien et les stationnements.

Evitez de mettre en marche les appareils produisant du monoxyde de carbone (tels que les automobile, les appareils de chauffage autonome,etc.) dans des endroits non ventilés tels que les d'empoisonnement au monoxyde de carbone. Si vous devez faire fonctionner ces appareils dans un endroit clos, assures-vous qu'il y ait une ventilation directe provenant de l'exterier.

Cette ventilation est nécessaire pour éviter le danger d'intoxication au CO pouvant survenir si un appareil produisant du monoxyde de carbone continue de fonctionner au sein de la zone confinée.

Les émissions de monoxyde de carbone peuvent etre recircules dans les endroits clos, si l'appareil de chauffage ou de traitement d'air sont en marche.

Le monoxyde de carbone peut causer des maladies graves telles que des dommages permanents au cerveau et meme la mort. B10259-216

WARNING

IF THE INFORMATION IN THESE INSTRUCTIONS IS NOT FOLLOWED EXACTLY, A FIRE OR EXPLOSION MAY RESULT CAUSING PROPERTY DAMAGE, PERSONAL INJURY OR LOSS OF LIFE.

– DO NOT STORE OR USE GASOLINE OR OTHER FLAMMABLE VAPORS AND LIQUIDS IN THE VICINITY OF THIS OR ANY OTHER APPLIANCE.

– WHAT TO DO IF YOU SMELL GAS:
- DO NOT TRY TO LIGHT ANY APPLIANCE.
- DO NOT TOUCH ANY ELECTRICAL SWITCH; DO NOT USE ANY PHONE IN YOUR BUILDING.
- IMMEDIATELY CALL YOUR GAS SUPPLIER FROM A NEIGHBOR'S PHONE. FOLLOW THE GAS SUPPLIER'S INSTRUCTIONS.
- IF YOU CANNOT REACH YOUR GAS SUPPLIER, CALL THE FIRE DEPARTMENT.

– INSTALLATION AND SERVICE MUST BE PERFORMED BY A QUALIFIED INSTALLER, SERVICE AGENCY OR THE GAS SUPPLIER.

WARNING

SHOULD OVERHEATING OCCUR OR THE GAS SUPPLY FAIL TO SHUT OFF, TURN OFF THE MANUAL GAS SHUTOFF VALVE EXTERNAL TO THE FURNACE BEFORE TURNING OFF THE ELECTRICAL SUPPLY.

To locate an authorized servicer, please consult your telephone book or the dealer from whom you purchased this product. For further assistance, please contact:

CONSUMER INFORMATION LINE
AMANA® BRAND PRODUCTS
TOLL FREE
1-877-254-4729 (U.S. only)
email us at: hac.consumer.affairs@amanahvac.com
fax us at: (731) 856-1821
(Not a technical assistance line for dealers.)

CONSUMER INFORMATION LINE
GOODMAN® BRAND PRODUCTS
TOLL FREE
1-877-254-4729 (U.S. only)
email us at:
customerservice@goodmanmfg.com
fax us at: (731) 856-1821
(Not a technical assistance line for dealers.)

Outside the U.S., call 1-713-861-2500.
(Not a technical assistance line for dealers.) Your telephone company will bill you for the call.

PRODUCT IDENTIFICATION

The model and manufacturing number are used for positive identification of component parts used in manufacturing. Please use these numbers when requesting service or parts information.

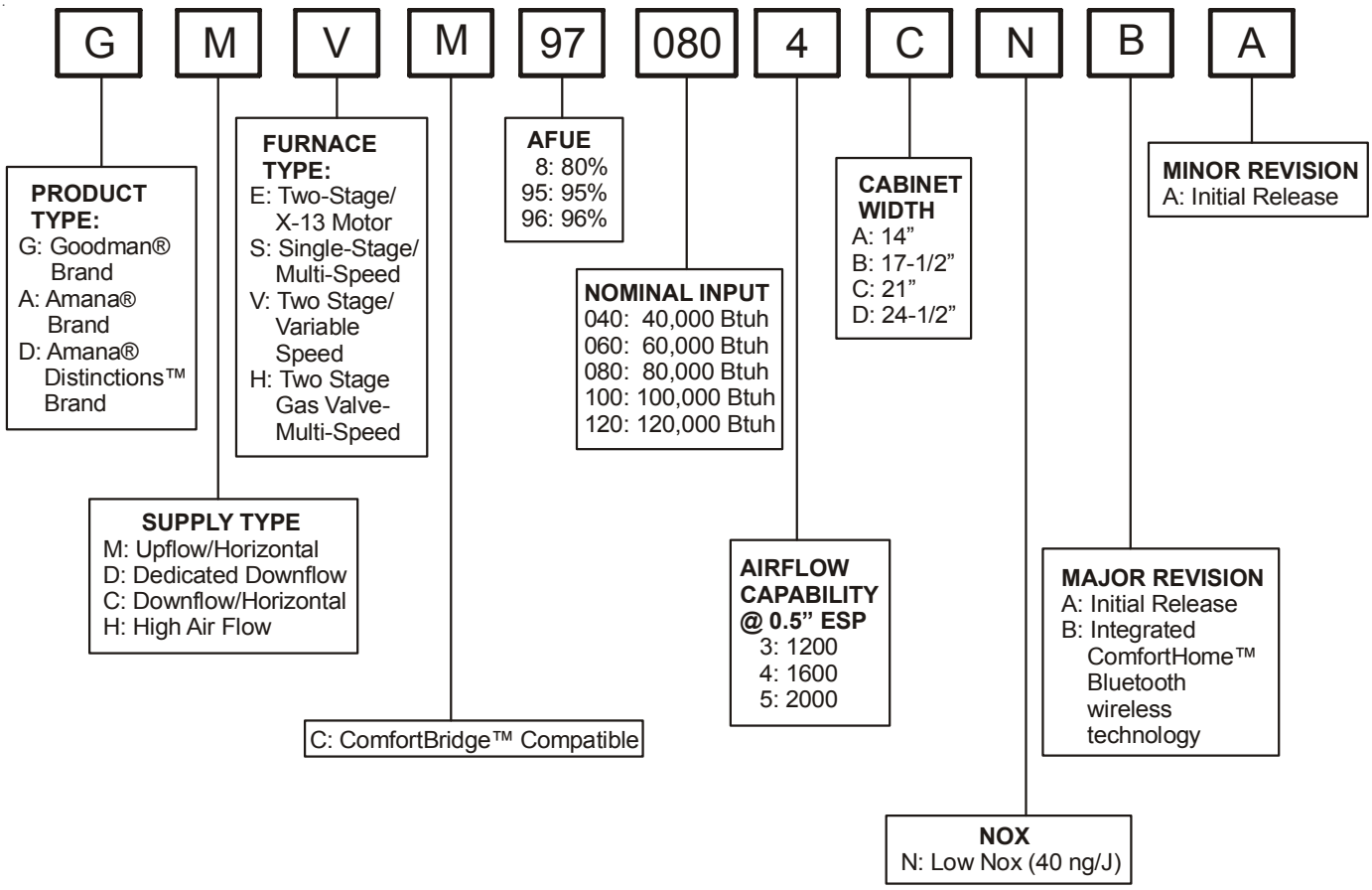

PRODUCT IDENTIFICATION

MODEL: GCVM97 REV BA

Equipment Type	Goodman Residential Gas Furnace
Heating Stages	Modulating
Cooling Stages	Two
Control Type	Conventional 24 Volt
Blower Motor Type	4 Wire Variable Speed ECM

GCVM97	0603BN	0803BN	0804CN	1005CN
Installation Positions	CF, Hor L/R	CF, Hor L/R	CF, Hor L/R	CF, Hor L/R
BTUH Input High Fire Nat Gas	60,000	80,000	80,000	100,000
BTUH Output High Fire Nat Gas	57,600	76,800	76,800	96,000
Low-Fire Steady-State Input¹	42,000	56,000	56,000	70,000
Low-Fire Steady-State Output¹	40,320	53,760	53,760	67,200
A/C Capable Tons	1.5 - 3	2 - 4	2 - 4	2 - 5
Cabinet Width "	17.5	17.5	21	21
Heating CFM @ 100% Firing Rate				
Draft Inducer	Variable Speed			
Gas Valve	Stepper			
24 VAC Heating Inputs	W			
24 VAC Cooling Inputs	Y			
Primary Heat Exchanger	Aluminized Steel			
Accessory Terminals	EAC terminal			
Gas Line Entry	Left or Right			
Revision Attributes	BlueTooth Technology. Internal algorithms adjust staging times / cooling capacities based on load changes to the conditioned space.			
Notes	¹ Natural Gas BTU/h ² DOE AFUE based upon Isolated Combustion System (ICS)			

MODEL: GMVM97 REV BA

Equipment Type	Goodman Residential Gas Furnace
Heating Stages	Modulating
Cooling Stages	Two
Control Type	Conventional 24 Volt
Blower Motor Type	4 Wire Variable Speed ECM

GMVM97	0603BN	0803BN	0804CN	1005CN	1205DN
Installation Positions	CF, Hor L/R	CF, Hor L/R	CF, Hor L/R	CF, Hor L/R	CF, Hor L/R
BTUH Input High Fire Nat Gas	60,000	80,000	80,000	100,000	100,000
BTUH Output High Fire Nat Gas	57,600	76,800	76,800	96,000	96,000
Low-Fire Steady-State Input¹	42,000	56,000	56,000	70,000	70,000
Low-Fire Steady-State Output¹	40,320	53,760	53,760	67,200	67,200
A/C Capable Tons	1.5 - 3	2 - 4	2 - 4	2 - 5	2 - 5
Cabinet Width "	17.5	17.5	21	21	21
Heating CFM @ 100% Firing Rate					
Draft Inducer	Variable Speed				
Gas Valve	Stepper				
24 VAC Heating Inputs	W				
24 VAC Cooling Inputs	Y				
Primary Heat Exchanger	Aluminized Steel				
Accessory Terminals	EAC terminal				
Gas Line Entry	Left or Right				
Revision Attributes	BlueTooth Technology. Internal algorithms adjust staging times / cooling capacities based on load changes to the conditioned space.				
Notes	¹ Natural Gas BTU/h ² DOE AFUE based upon Isolated Combustion System (ICS)				

MODEL: ACVM97 REV BA

Equipment Type	Goodman Residential Gas Furnace
Heating Stages	Modulating
Cooling Stages	Two
Control Type	Conventional 24 Volt
Blower Motor Type	4 Wire Variable Speed ECM

ACVM97	0603BN	0803BN	0804CN	1005CN
Installation Positions	CF, Hor L/R	CF, Hor L/R	CF, Hor L/R	CF, Hor L/R
BTUH Input High Fire Nat Gas	60,000	80,000	80,000	100,000
BTUH Output High Fire Nat Gas	57,600	76,800	76,800	96,000
Low-Fire Steady-State Input¹	42,000	56,000	56,000	70,000
Low-Fire Steady-State Output¹	40,320	53,760	53,760	67,200
A/C Capable Tons	1.5 - 3	2 - 4	2 - 4	2 - 5
Cabinet Width "	17.5	17.5	21	21
Heating CFM @ 100% Firing Rate				
Draft Inducer	Variable Speed			
Gas Valve	Stepper			
24 VAC Heating Inputs	W			
24 VAC Cooling Inputs	Y			
Primary Heat Exchanger	Stainless Steel			
Accessory Terminals	EAC terminal			
Gas Line Entry	Left or Right			
Revision Attributes	BlueTooth Technology. Internal algorithms adjust staging times / cooling capacities based on load changes to the conditioned space.			
Notes	¹ Natural Gas BTU/h ² DOE AFUE based upon Isolated Combustion System (ICS)			

MODEL: AMVM97 REV BA

Equipment Type	Goodman Residential Gas Furnace
Heating Stages	Modulating
Cooling Stages	Two
Control Type	Conventional 24 Volt
Blower Motor Type	4 Wire Variable Speed ECM

AMVM97	0603BN	0803BN	0804CN	1005CN	1205DN
Installation Positions	UF, Hor L/R	UF, Hor L/R	UF, Hor L/R	UF, Hor L/R	UF, Hor L/R
BTUH Input High Fire Nat Gas	60,000	80,000	80,000	100,000	100,000
BTUH Output High Fire Nat Gas	57,600	76,800	76,800	96,000	96,000
Low-Fire Steady-State Input¹	42,000	56,000	56,000	70,000	70,000
Low-Fire Steady-State Output¹	40,320	53,760	53,760	67,200	67,200
A/C Capable Tons	1.5 - 3	2 - 4	2 - 4	2 - 5	2 - 5
Cabinet Width "	17.5	17.5	21	21	21
Heating CFM @ 100% Firing Rate					
Draft Inducer	Variable Speed				
Gas Valve	Stepper				
24 VAC Heating Inputs	W				
24 VAC Cooling Inputs	Y				
Primary Heat Exchanger	Stainless Steel				
Accessory Terminals	EAC terminal				
Gas Line Entry	Left or Right				
Revision Attributes	BlueTooth Technology. Internal algorithms adjust staging times / cooling capacities based on load changes to the conditioned space.				
Notes	¹ Natural Gas BTU/h ² DOE AFUE based upon Isolated Combustion System (ICS)				

PRODUCT IDENTIFICATION

MODEL #	MFG #	DESCRIPTION
AFE18-60A	N/A	**Fossil Fuel Kit.** The AFE18-60A control is designed for use where the indoor coil is located above/downstream of a gas or fossil fuel furnace when used with a heat pump. It will operate with single and two stage heat pumps and single and two stage furnaces. The AFE18-60A control will turn the heat pump unit off when the furnace is turned on. An anti-short cycle feature initiates a 3 minute timed off delay when the compressor goes off.
AMU1620 **AMU1625** **AMU2020** **AMU2025** **GMU1620** **GMU1625** **GMU2020** **GMU2025**	P1251305F P1251306F P1251307F P1251308F N/A	**Media Air Cleaner.** For use with current architectural grey Goodman® and Amana® Brand furnace models. The Amana (AMU*) and Goodman (GMU*) Media Air Cleaner is a high efficiency air filtration device designed to remove dirt, dust, pollen and other microscopic particles from the air passing through it. Flexible performance range up to 2,000 CFM capacity. The air cleaner should be installed in the system so that all the system air is circulated through the air cleaner. The air cleaner will only remove the airborne contaminants delivered to it. Maximum performance is obtained when the system blower is set for continuous operation. Carbon filters (optional) are available.
ASAS-10 **ASAS-11** **ASAS-12** **ASAS-18**	P1251301F P1251302F P1251303F P1251304F	**Electronic Air Cleaner.** For use with current architectural grey Goodman® and Amana® Brand furnace models. The High-Efficiency Electronic Air Cleaner is designed to remove air contaminants down to .01 microns. Carbon filters (optional) remove odors. Dual indicator lights show unit operation at a glance. Electronic proving switch cycles the air cleaner On/Off with the system fan. Durable powder-coat paint finish resists corrosion.
CFSB17 **CFSB21** **CFSB24**	N/A	**Counterflow Subbase Kit.** For use with select Goodman® and Amana® Brand 34.5" furnace models ACVC9 and GCVC9. These kits are available for the following furnace widths: 17.5" wide (CFSB17), 21" wide (CFSB21) and 24" wide (CFSB24). The kits must be used to prevent excessive temperature from reaching combustible materials, if the furnace is installed on a combustible floor. This subbase effectively separated the furnace base and plenum from combustible materials. To ensure safe installation, do not install the counterflow floor base directly on carpeting, tile, or other combustible material other than wood flooring.
DCVK-20 **(CVENT-2)** **DCVK-30** **(CVENT-3)**	N/A	**Concentric Vent Kit.** For use with Amana® Brand 90% furnace models. This kit is designed to allow terminations of a direct vent furnace to be "concentrically" vented through a wall or roof. This kit allows a single penetration to support terminations for both the vent/flue and the combustion air intake pipe. The DCVK-20 (2") and DCVK-30 (3") kits are certified for models listed above. See specification sheets on future models for use of the vent kit.
0170K00000S	N/A	**Side Wall Only Concentric Vent Kit**. For use with 90% furnace models. This kit is to be used with 2" - 3" vent systems. The vent kit must terminate outside the structure. This kit is NOT intended for use with single pipe (indirect vent) installations.
0170K00001S	N/A	**Side Wall Only Concentric Vent Kit**. For use with 90% furnace models. This kit is to be used only with 2" vent systems. The vent kit must terminate outside the structure. This kit is NOT intended for use with single pipe (indirect vent) installations.

PRODUCT IDENTIFICATION

MODEL #	MFG #	DESCRIPTION
EFR02	N/A	**External Filter Rack Kit.** For use with Goodman® and Amana® Brand 90% upflow variable speed gas furnace models. This kit is intended to provide a location, external to the furnace casing, for installation of a permanent filter. The rack is mounted over the indoor air blower compartment area of either side panel, and provide filter retention as well as a location for attaching return air ductwork.
HASFK-1 **HASFK-2** **HASFK-3**	N/A	**High Altitude Natural Gas Kit & LP Kit.** Used on selected Goodman® Brand and Amana® Brand 90% two stage furnace models. These kits are required when installing the furnaces above their maximum rated altitude. The orifices in the kit have been selected as a result of testing with the American Gas Association. They will provide appropriate derating at the altitude listed in the High Altitude Charts as shown in the installations of the kit.
LPLP03	N/A	**LP Gas Low Pressure Kit.** Designed for application on Goodman® and Amana® Brand's gas furnace products installed on LP gas listed in this manual. This kit includes harness adaptors to work with White-Rodgers single & two stage gas valves,Honeywell single and two-stage gas valves, as well as modulating gas valves.
LPM-08	N/A	**LP Conversion Kit.** For use with Goodman® and Amana® Brand 34.5" 2-stage variable speed models using a White-Rodgers 36J54,, 2-stage gas valve kit. Includes regulator springs, 1.25mm orifices, instructions and a label to show the furnace has been converted to L.P.

PRODUCT IDENTIFICATION

MODEL #	MFG #	DESCRIPTION
EFR02	N/A	**External Filter Rack Kit.** For use with Goodman® and Amana® Brand 90% upflow variable speed gas furnace models. This kit is intended to provide a location, external to the furnace casing, for installation of a permanent filter. The rack is mounted over the indoor air blower compartment area of either side panel, and provide filter retention as well as a location for attaching return air ductwork.
HASFK-1 **HASFK-2** **HASFK-3**	N/A	**High Altitude Natural Gas Kit & LP Kit.** Used on selected Goodman® Brand and Amana® Brand 90% two stage furnace models. These kits are required when installing the furnaces above their maximum rated altitude. The orifices in the kit have been selected as a result of testing with the American Gas Association. They will provide appropriate derating at the altitude listed in the High Altitude Charts as shown in the installations of the kit.
LPLP03	N/A	**LP Gas Low Pressure Kit.** Designed for application on Goodman® and Amana® Brand's gas furnace products installed on LP gas listed in this manual. This kit includes harness adaptors to work with White-Rodgers single & two stage gas valves,Honeywell single and two-stage gas valves, as well as modulating gas valves.
LPM-08	N/A	**LP Conversion Kit.** For use with Goodman® and Amana® Brand 34.5" 2-stage variable speed models using a White-Rodgers 36J54,, 2-stage gas valve kit. Includes regulator springs, 1.25mm orifices, instructions and a label to show the furnace has been converted to L.P.

ACCESSORIES

96% Com Furnace Accessories

96% Com Furnace Accessories

Model Number	AFE180-60A	AMU / GMU	EFR02	ASAS / GSAS	CFSB17	CFSB21	CFSB24	RF000142
Description	Fossil Fuel Kit	Media Air Cleaners	External Filter Rack	Electronic Air Cleaner	Downflow Subbase 17.5"	Downflow Subbase 21"	Downflow Subbase 24.5"	Drain Coupling Kit
MVM970603BNB	X	X	X	X				X
MVM970803BNB	X	X	X	X				X
MVM970804CNB	X	X	X	X				X
MVM971005CNB	X	X	X	X				X
MVM971205DNB	X	X	X	X				X
CVM970603BNB	X	X		X	X			X
CVM970803BNB	X	X		X	X			X
CVM970804CNB	X	X		X		X		X
CVM971005CNB	X	X		X		X		X

Model Number	0170K00000S	0170K00001S	DCVK-20 (CVENT-2)	DCVK-30 (CVENT-3)
Description	Concentric Side Wall Vent Kit (3")	Concentric Side Wall Vent Kit (2")	Concentric Vent Kit (2")	Concentric Vent Kit (3")
MVM970403BNB	X	X	X	X
MVM970803BNB	X	X	X	X
MVM970804CNB	X	X	X	X
MVM971005CNB	X			X
MVM971205DNB	X			X
CVM970603BNB	X	X	X	X
CVM970803BNB	X	X	X	X
CVM970804CNB	X	X	X	X
CVM971005CNB	X			X

ACCESSORIES

97% Com Furnace Accessories

Model Number	TBD	LPLP03	TBD
Description	L.P. Kit	Low LP Tank Protection	High Altitude Natural Gas Kit Kit
MVM970603BNB	X	X	
MVM970803BNB	X	X	
MVM970804CNB	X	X	
MVM971005CNB	X	X	
MVM971205DNB	X	X	
CVM970603BNB	X	X	
CVM970803BNB	X	X	
CVM970804CNB	X	X	
CVM971005CNB	X	X	

ACCESSORIES

EXTERNAL FILTER RACK (EFR02)

97% Upflow Model Furnaces

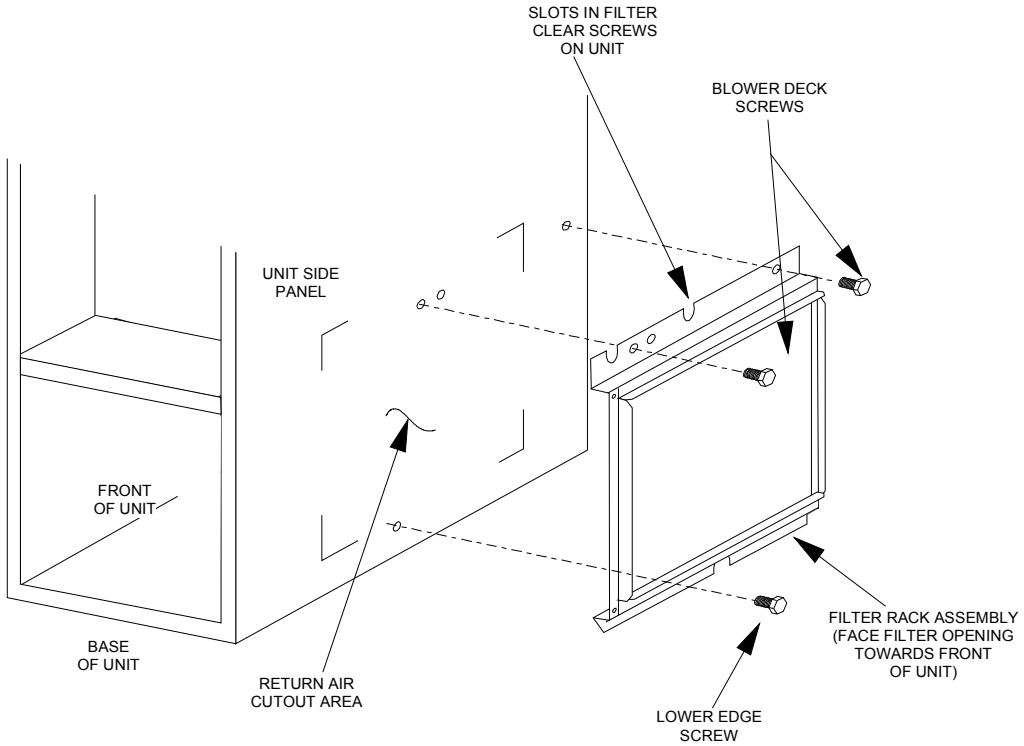

SIDE WALL VENT KITS (0170K00000S) (0170K00001S)

Description

0170K00000S

This side wall only vent kit **#0170K00000S** is to be used with 2” - 3” vent systems. This kit is **NOT intended** for use with single pipe (indirect vent) installations.

The vent kit must terminate outside the structure and may be installed with the intake and exhaust pipes located side-by-side or with one pipe above the other.

See the section in this manual under "Vent Flue and Combustion Air Pipe Terminations" for more information or consult the Installation Instructions (IO-635).

0170K00001S

This vent kit is to be used with 2” vent systems. The vent kit must terminate outside the structure and may be installed with the intake and exhaust pipes located side-by side or with one pipe above the other. This kit is NOT intended for use with single pipe (indirect vent) installations.

See the section in this manual under "Vent Flue and Combustion Air Pipe Terminations" for more information or consult the Installation Instructions (IO-805).

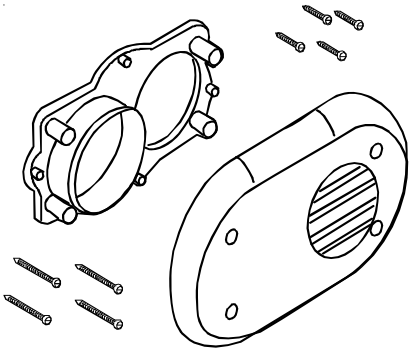

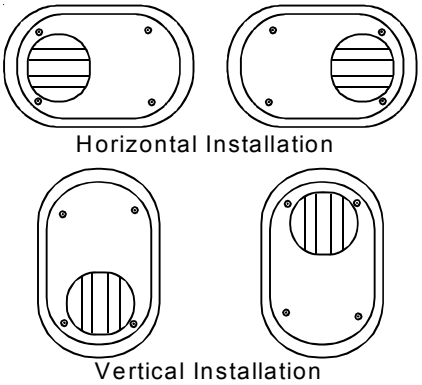

ACCESSORIES

CONCENTRIC VENT CONVERSION KIT

The CVENT-2 (DCVK20) (2") or the CVENT-3 (DCVK-30) (3") is a concentric vent kit approved with furnaces listed in this manual. This concentric vent kit allows for vertical or horizontal vent termination. The illustrations give a brief view of the kit and its application.

See the section in this manual under "Vent Flue and Combustion Air Pipe Terminations" for more information or consult the Installation and Operating Instructions (IO-619*).

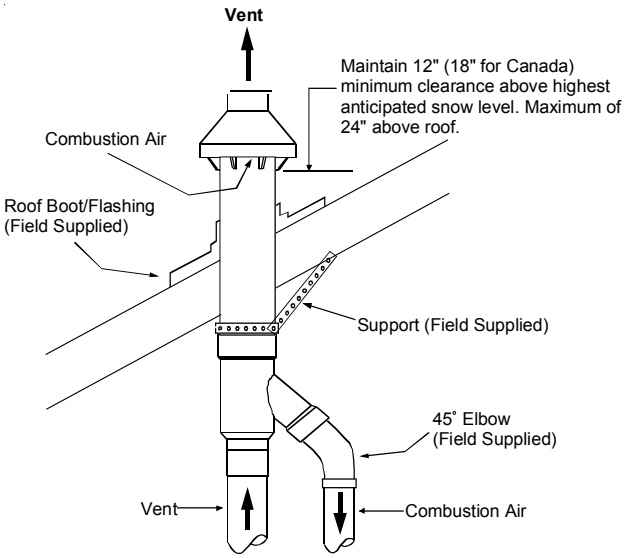

DCVK (Vertical Installation)

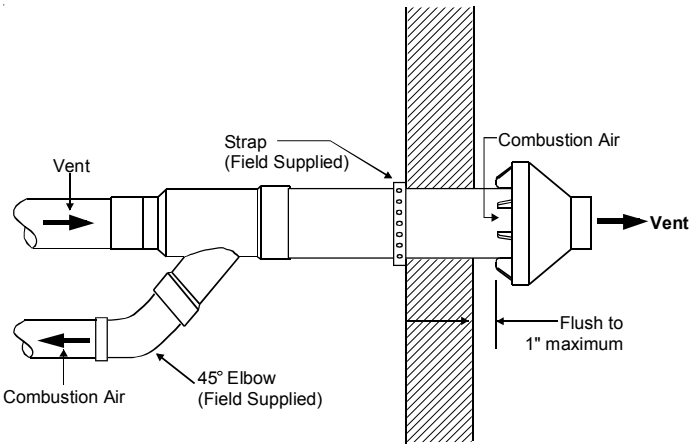

DCVK (Horizontal Installation)

AFE18-60A Dual Fuel Accessory

This control is mounted indoors near the furnace and provides terminals for thermostat, furnace, and heat pump wiring. The AFE18-60A may be used with this furnace & a single stage heat pump. See low voltage wiring section for details.

CFSB17, 21, 24 Counter Flow Base

The CFSB base must be used when installing a *CVC96 furnace in the vertical position on a combustible floor without a coil under the furnace.

LPLP03 Low LP Gas Pressure Shut-off Kit

Installation of the LPLP03 kit is recommended on every L.P. converted furnace to protect the furnace against low L.P. gas supply pressure. Low L.P. supply pressure can cause poor combustion and carbon in the heat exchanger. The LPLP03 kit will open the electrical circuit to the gas valve in the event of low supply pressure. The kit contains a pressure switch, gas fittings and electrical harness to connect the switch in series with the gas valve.

LPM-08 LP Conversion Kit

This furnace is factory equipped to operate on Natural Gas but may be field converted to operate on L.P. gas. To convert a *MVC96 or *CVC96 furnace to operate on L.P. gas, the LPM-08 conversion kit must be used. The LPM-08 kit contains a set of 1.25 mm orifices to replace the factory installed natural gas orifices and a set of springs to convert the gas valve to L.P. gas.

OT18-60A Outdoor Thermostat

For use in a legacy dual fuel installation to lock-out the heat pump at a selected temperature.

INSTALLATION CONSIDERATIONS

Safety

Please adhere to the following warnings and cautions when installing, adjusting, altering, servicing, or operating the furnace.

WARNING

TO PREVENT PERSONAL INJURY OR DEATH DUE TO IMPROPER INSTALLATION, ADJUSTMENT, ALTERATION, SERVICE OR MAINTENANCE, REFER TO THIS MANUAL. FOR ADDITIONAL ASSISTANCE OR INFORMATION, CONSULT A QUALIFIED INSTALLER, SERVICE AGENCY OR THE GAS SUPPLIER.

WARNING

THIS PRODUCT CONTAINS OR PRODUCES A CHEMICAL OR CHEMICALS WHICH MAY CAUSE SERIOUS ILLNESS OR DEATH AND WHICH ARE KNOWN TO THE STATE OF CALIFORNIA TO CAUSE CANCER, BIRTH DEFECTS OR OTHER REPRODUCTIVE HARM.

WARNING

TO PREVENT POSSIBLE PROPERTY DAMAGE, PERSONAL INJURY OR DEATH DUE TO ELECTRICAL SHOCK, THE FURNACE MUST BE LOCATED TO PROTECT THE ELECTRICAL COMPONENTS FROM WATER.

ELECTROSTATIC DISCHARGE (ESD) PRECAUTIONS

NOTE: Discharge your body's static electricity before touching unit. An electrostatic discharge can adversely affect electrical components.

Use the following precautions during furnace installation and servicing to protect the integrated control module from damage. By putting the furnace, the control, and the person at the same electrostatic potential, these steps will help avoid exposing the integrated control module to electrostatic discharge. This procedure is applicable to both installed and non-installed (ungrounded) furnaces.

1. Disconnect all power to the furnace. Do not touch the integrated control module or any wire connected to the control prior to discharging your body's electrostatic charge to ground.
2. Firmly touch a clean, unpainted, metal surface of the furnaces near the control. Any tools held in a person's hand during grounding will be discharged.
3. Service integrated control module or connecting wiring following the discharge process in step 2. Use caution not to recharge your body with static electricity; (i.e., do not move or shuffle your feet, do not touch ungrounded objects, etc.). If you come in contact with an ungrounded object, repeat step 2 before touching control or wires.
4. Discharge your body to ground before removing a new control from its container. Follow steps 1 through 3 if installing the control on a furnace. Return any old or new controls to their containers before touching any ungrounded object.

WARNING

TO PREVENT PROPERTY DAMAGE, PERSONAL INJURY OR DEATH DUE TO FIRE, DO NOT INSTALL THIS FURNACE IN A MOBILE HOME, TRAILER, OR RECREATIONAL VEHICLE.

Product Application

VALID EQUIPMENT COMBINATIONS*		
Furnace Alone	- - -	- - -
Furnace +	1 Stage Non-Communicating A/C	- - -
Furnace +	1 Stage Non-Communicating A/C +	Equipment relay Board
Furnace +	2 Stage Non-Communicating A/C +	Equipment relay Board
Furnace +	1 Stage Non-Communicating H/P +	Equipment relay Board
Furnace +	2 Stage Non-Communicating H/P +	Equipment relay Board
Furnace +	Communicating A/C	- - -
Furnace +	Communicating H/P	- - -
Furnace +	Communicating A/C Inverter	- - -
Furnace +	Communicating H/P Inverter	- - -

*All combinations assume non-communicating single stage thermostat & AHRI matched equipment.
Equipment Relay Board Pt # PCBCM101

This furnace is primarily designed for residential home-heating applications. It is NOT designed or certified for use in mobile homes, trailers or recreational vehicles. Neither is it designed or certified for outdoor applications. The furnace **must** be installed indoors (i.e., attic space, crawl space, or garage area provided the garage area is enclosed with an operating door).

This furnace can be used in the following non-industrial commercial applications:

Schools, Office buildings, Churches, Retail stores,
Nursing homes, Hotels/motels, Common or office areas

In such applications, the furnace must be installed with the following stipulations:

- It must be installed per the installation instructions provided and per local and national codes.
- It must be installed indoors in a building constructed on site.
- It must be part of a ducted system and not used in a free air delivery application.
- It must not be used as a "make-up" air unit.
- It must be installed as a two-pipe systems for combustion air.
- All other warranty exclusions and restrictions apply This furnace is an ETL dual-certified appliance and is appropriate for use with natural or propane gas (**NOTE:** If using propane, a propane conversion kit is required).

Dual certification means that the combustion air inlet pipe is optional and the furnace can be vented as a:

Non-direct vent (single pipe) central forced air furnace in which combustion air is taken from the installation area or from air ducted from the outside or,

INSTALLATION CONSIDERATIONS

Direct vent (dual pipe) central forced air furnace in which all combustion air supplied directly to the furnace burners through a special air intake system outlined in these instructions.

Gas furnaces manufactured on or after May 1, 2017 are not permitted to be used in Canada for heating of buildings or structures under construction.

In the U.S.A. this furnace may be used as a construction site heater **ONLY** if all of the following conditions are met:

- The vent system is permanently installed per these installation instructions.
- A room thermostat is used to control the furnace. Fixed jumpers that provide continuous heating CANNOT be used and can cause long term equipment damage. Bi-metal thermostats, or any thermostat affected by vibration must not be used during construction.
- Return air ducts are provided and sealed to the furnace.
- A return air temperature range between 60ºF (16ºC) and 80ºF (27ºC) is maintained.
- Air filters are installed in the system and replaced daily during construction and upon completion of construction.
- The input rate and temperature rise are set per the furnace rating plate.
- The furnace must be installed as a two pipe system, using 100% outside air for combustion during construction.
- The furnace heat exchanger, components, duct system, air filters and evaporator coils are thoroughly cleaned following final construction clean up by a qualified person.
- All furnace operating conditions (including ignition, input rate, temperature rise and venting) are verified by a qualified person according to these installation instructions.
- Furnace doors must be in place on the furnace while the furnace is operating in any mode.
- Damage or repairs due to failure to comply with these requirements are not covered under the warranty.

NOTE: The Commonwealth of Massachusetts requires that the following additional requirements must also be met:

- Gas furnaces must be installed by a licensed plumber or gas fitter.
- A T-handle gas cock must be used.
- If the unit is to be installed in an attic, the passageway to and the service area around the unit must have flooring.

To ensure proper furnace operation, install, operate and maintain the furnace in accordance with these installation and operation instructions, all local building codes and ordinances. In their absence, follow the latest edition of the National Fuel Gas Code (NFPA 54/ ANSI Z223.1), and/or CAN/CSA B149.1-15 Installation Codes, local plumbing or waste water codes, and other applicable codes.

A copy of the National Fuel Gas Code (NFPA 54/ANSI Z223.1) can be obtained from any of the following::

American National Standards Institute
25 West 43rd Street, 4th Floor
New York, NY 10036

National Fire Protection Association
1 Batterymarch Park
Quincy, MA 02169-7471

CSA International
8501 East Pleasant Valley
Independence, OH 44131

The rated heating capacity of the furnace should be greater than or equal to the total heat loss of the area to be heated. The total heat loss should be calculated by an approved method or in accordance with "ASHRAE Guide" or "Manual J-Load Calculations" published by the Air Conditioning Contractors of America.

A copy of the CAN/CSA B149.1-15 Installation Codes can also be obtained from:

CSA International
178 Rexdale Boulevard
Etobicoke, Ontario, Canada M9W 1R3

Location Requirements & Considerations

Follow the instructions listed below and the guidelines provided in the *Combustion and Ventilation Air Requirements* section when selecting a furnace location.

WARNING

TO PREVENT POSSIBLE EQUIPMENT DAMAGE, PROPERTY DAMAGE, PERSONAL INJURY OR DEATH, THE FOLLOWING BULLET POINTS MUST BE OBSERVED WHEN INSTALLING THIS UNIT.

WARNING

POSSIBLE PROPERTY DAMAGE, PERSONAL INJURY OR DEATH DUE TO FIRE, EXPLOSION, SMOKE, SOOT, CONDENSATION, ELECTRICAL SHOCK OR CARBON MONOXIDE MAY RESULT FROM IMPROPER INSTALLATION, REPAIR OPERATION, OR MAINTENANCE OF THIS PRODUCT.

- Centrally locate the furnace with respect to the proposed or existing air distribution system.
- Ensure the temperature of the return air entering the furnace is between 55°F and 100°F when the furnace is heating.
- Provide provisions for venting combustion products outdoors through a proper venting system. Special consideration should be given to vent/flue pipe routing and combustion air intake pipe when applicable. Refer to *Vent/Flue Pipe and Combustion Air Pipe -Termination Locations* for appropriate termination locations and to determine if the piping system from furnace to termination can be accomplished within the guidelines given. **NOTE:** The length of flue and/or combustion air piping can be a limiting factor in the location of the furnace.

INSTALLATION CONSIDERATIONS

- Locate the furnace so condensate flows downwards to the drain. Do not locate the furnace or its condensate drainage system in any area subject to below freezing temperatures without proper freeze protection. Refer to *Condensate Drain Lines and Trap* for further details.
- Ensure adequate combustion air is available for the furnace. Improper or insufficient combustion air can expose building occupants to gas combustion products that could include carbon monoxide. Refer to *Combustion and Ventilation Air Requirements.*
- Set the furnace on a level floor to enable proper condensate drainage. If the floor becomes wet or damp at times, place the furnace above the floor on a concrete base sized approximately 1-1/2" larger than the base of the furnace. Refer to the *Horizontal Applications and Considerations* for leveling of horizontal furnaces.
- Ensure upflow or horizontal furnaces are not installed directly on carpeting, or any other combustible material. The only combustible material allowed is wood.
- A special accessory subbase must be used for upright counterflow unit installations over any combustible material (including wood). Refer to subbase instructions for installation details. (**NOTE:** A subbase will not be required if an air conditioning coil is located beneath the furnace between the supply air opening and the combustible floor.
- Exposure to contaminated combustion air will result in safety and performance-related problems. Do not install the furnace where the combustion air is exposed to the following substances:

  permanent wave solutions
  cleaning solutions (such as perchloroethylene)
  printing inks
  chlorinated waxes or cleaners
  paint removers
  chlorine-based swimming pool chemicals
  varnishes
  water softening chemicals
  hydrochloric acid
  carbon tetrachloride
  cements and glues
  deicing salts or chemicals
  halogen type refrigerants
  antistatic fabric softeners for clothes dryers
  and masonry acid washing materials
- Isolate a *non-direct vent* furnace if it is installed near an area frequently contaminated by any of the above substances. This protects the *non-direct vent* furnace from airborne contaminants. To ensure that the enclosed *non-direct vent* furnace has an adequate supply of combustion air, vent from a nearby uncontaminated room or from outdoors. Refer to the *Combustion and Ventilation Air Requirements* for details.
- If the furnace is used in connection with a cooling coil unit, install the furnace upstream or in parallel with the cooling coil unit. Premature heat exchanger failure will result if the cooling unit is placed ahead of the furnace.

  For vertical (upflow or downflow) applications, the minimum cooling coil width shall not be less than furnace width minus 1". Additionally, a coil installed above an upflow furnace or under a counterflow furnace may be the same width as the furnace or may be one size larger than the furnace. *Example: a "C" width coil may be installed with a "B" width furnace.*

  For upflow applications, the front of the coil and furnace must face the same direction.
- If the furnace is installed in a residential garage, position the furnace so that the burners and ignition source are located not less than 18 inches (457 mm) above the floor. Protect the furnace from physical damage by vehicles.
- If the furnace is installed horizontally, ensure the access doors are not on the "up/top" or "down/bottom" side of the furnace.
- Do not connect this furnace to a chimney flue that serves a separate appliance designed to burn solid fuel.
- On Counterflow Installations, the air conditioning coil must be downstream on the supply (positive) side of the furnace heat exchanger.
- *Counterflow Installation over a noncombustible floor.* Before setting the furnace over the plenum opening, ensure the surface around the opening is smooth and level. A tight seal should be made between the furnace base and floor by using a silicone rubber caulking compound or cement grout.
- *Counterflow Installation over a combustible floor.* If installation over a combustible floor becomes necessary, use an accessory subbase (see Specification Sheet applicable for your model for details.) A special accessory subbase must be used for upright counterflow unit installations over any combustible material including wood. Refer to subbase instructions for installation details. Follow the instructions with the subbase for proper installation. Do not install the furnace directly on carpeting, tile, or other combustible material other than wood flooring. (**NOTE**: The subbase will not be required if an air conditioning coil is installed between the supply air opening on the furnace and the floor.)

*MVC96 MINIMUM CLEARANCES TO COMBUSTIBLE MATERIALS (INCHES)						
POSITION*	SIDES	REAR	FRONT	BOTTOM	FLUE	TOP
Upflow	0"	0"	3"	C	0"	1"
Horizontal	6"	0"	3"	C	0"	6"

C = If placed on combustible floor, floor MUST be wood only.

INSTALLATION CONSIDERATIONS

*CVC96 MINIMUM CLEARANCES TO COMBUSTIBLE MATERIALS (INCHES)						
POSITION*	SIDES	REAR	FRONT	BOTTOM	FLUE	TOP
Counterflow	0"	0"	3"	NC	0"	1"
Horizontal	6"	0"	3"	C	0"	6"

C = If placed on combustible floor, floor MUST be wood only.

NC = For installation on non-combustible floors only. A combustible subbase must be used for installations on combustible flooring.

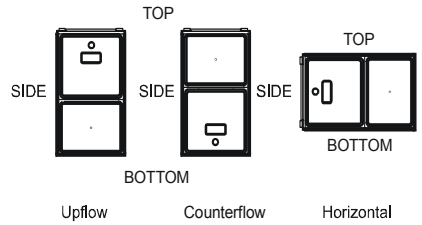

Figure 1

Clearances and Accessibility

NOTES:

- For servicing or cleaning, a 24" front clearance is required.
- Unit connections (electrical, flue and drain) may necessitate greater clearances than the minimum clearances listed above.
- In all cases, accessibility clearance must take precedence over clearances from the enclosure where accessibility clearances are greater.

Installations must adhere to the clearances to combustible materials to which this furnace has been design certified. The minimum clearance information for this furnace is provided on the unit's clearance label. These clearances must be permanently maintained. Clearances must also accommodate an installation's gas, electrical, and drain trap and drain line connections. If the alternate combustion air intake or vent/flue connections are used additional clearance must be provided to accommodate these connections. Refer to *Vent/Flue Pipe and Combustion Air Pipe* for details.

NOTE: In addition to the required clearances to combustible materials, a minimum of 24 inches service clearance must be available in front of the unit.

A furnace installed in a confined space (i.e., a closet or utility room) must have two ventilation openings with a total minimum free area of 0.25 square inches per 1,000 BTU/hr of furnace input rating. Refer to Specification Sheet applicable to your model for minimum clearances to combustible surfaces. One of the ventilation openings must be within 12 inches of the top; the other opening must be within 12 inches of the bottom of the confined space. In a typical construction, the clearance between the door and door frame is usually adequate to satisfy this ventilation requirement..

Existing Furnace Removal

NOTE: When an existing furnace is removed from a venting system serving other appliances, the venting system may be too large to properly vent the remaining attached appliances.

The following vent testing procedure is reproduced from the **American National Standard/National Standard of Canada for Gas-Fired Central Furnaces ANSI Z21.47, CSA-2.3 latest edition Section 1.23.1.**

The following steps shall be followed with each appliance connected to the venting system placed in operation, while any other appliances connected to the venting system are not in operation:

1. Seal any unused openings in the venting system.
2. Inspect the venting system for proper size and horizontal pitch, as required by the National Fuel Gas Code, ANSI Z223.1 or the Natural Gas and Propane Installation Code, CAN/CSA B149.1-15 and these instructions. Determine that there is no blockage or restriction, leakage, corrosion and other deficiencies which could cause an unsafe condition.
3. As far as practical, close all building doors and windows and all doors between the space in which the appliance(s) connected to the venting system are located and other spaces of the building.
4. Close fireplace dampers.
5. Turn on clothes dryers and any appliance not connected to the venting system. Turn on any exhaust fans, such as range hoods and bathroom exhausts, so they shall operate at maximum speed. Do not operate a summer exhaust fan.
6. Follow the lighting instructions. Place the appliance being inspected in operation. Adjust thermostat so appliance shall operate continuously.
7. Test for spillage from draft hood appliances at the draft hood relief opening after 5 minutes of main burner operation. Use the flame of a match or candle.
8. If improper venting is observed during any of the above tests, the venting system must be corrected in accordance with the National Fuel Gas Code ANSI Z223.1/NFPA 54 and/or National Gas and Propane Installation Code CAN/CSA B149.1-15.
9. After it has been determined that each appliance connected to the venting system properly vents when tested as outlined above, return doors, windows, exhaust fans, fireplace dampers and any other gas burning appliance to their previous conditions of use.

If resizing is required on any portion of the venting system, use the appropriate table in Appendix G in the latest edition of the National Fuel Gas Code ANSI Z223.1 and/or CAN/CSA B149.1-15 Installation Codes.

Thermostat Location

WARNING

To avoid property damage, personal injury or death, sufficient fresh air for proper combustion and ventilation of flue gases must be supplied. Most homes require outside air be supplied into the furnace area.

INSTALLATION CONSIDERATIONS

The thermostat should be placed approximately five feet from the floor on a vibration-free, inside wall in an area having good air circulation. Do not install the thermostat where it may be influenced by any of the following:

- Drafts, or dead spots behind doors, in corners, or under cabinets.
- Hot or cold air from registers.
- Radiant heat from the sun.
- Light fixtures or other appliances.
- Radiant heat from a fireplace.
- Concealed hot or cold water pipes, or chimneys.
- Unconditioned areas behind the thermostat, such as an outside wall.

Consult the instructions packaged with the thermostat for mounting instructions and further precautions.

Combustion & Ventilation Air Requirements

Improved construction and additional insulation in buildings have reduced heat loss by reducing air infiltration and escape around doors and windows. These changes have helped in reducing heating/cooling costs but have created a problem supplying combustion and ventilation air for gas fired and other fuel burning appliances. Appliances that pull air out of the house (clothes dryers, exhaust fans, fireplaces, etc.) increase the problem by starving appliances for air.

House depressurization can cause back drafting or improper combustion of gas-fired appliances, thereby exposing building occupants to gas combustion products that could include carbon monoxide.

If this furnace is to be installed in the same space with other gas appliances, such as a water heater, ensure there is an adequate supply of combustion and ventilation air for the other appliances. Refer to the latest edition of the National Fuel Gas Code NFPA 54/ ANSI Z223.1 or CAN/CSA B149.1-15 Installation Codes or applicable provisions of the local building codes for determining the combustion air requirements for the appliances.

Most homes will require outside air be supplied to the furnace area by means of ventilation grilles or ducts connecting directly to the outdoors or spaces open to the outdoors such as attics or crawl spaces.

Installation Positions

This furnace may be installed in an upright position or horizontal on either the left or right side panel. Do not install this furnace on its back. For *upright upflow* furnaces, return air ductwork may be attached to the side panel(s) and/or basepan. For *horizontal upflow* furnaces, return air ductwork must be attached to the basepan. For both *upright or horizontal counterflow* furnaces, return ductwork must be attached to the basepan (top end of the blower compartment). **NOTE:** Ductwork must never be attached to the back of the furnace. Contact your distributor for proper airflow requirements and number of required ductwork connections. Refer to "Recommended Installation Positions" figure for appropriate installation positions, ductwork connections, and resulting airflow arrangements.

Horizontal Applications & Considerations

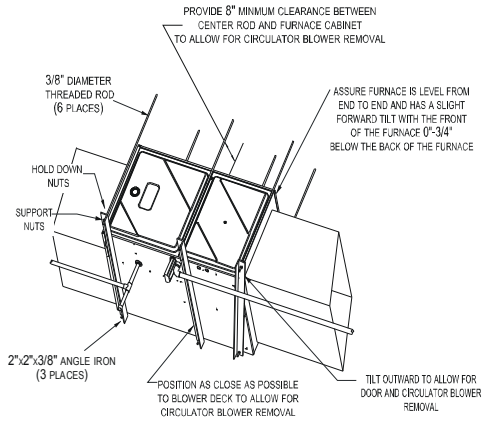

Figure 2

Figure 2

When installing a furnace horizontally, additional consideration must be given to the following:

Furnace Suspension

If suspending the furnace from rafters or joists, use 3/8" threaded rod and 2"x2"x1/8" angle iron as shown in the following diagram. The length of rod will depend on the application and the clearances necessary.

If the furnace is installed in a crawl space it must be suspended from the floor joist or supported by a concrete pad. Never install the furnace on the ground or allow it to be exposed to water.

Front Cover Pressure Switch Tube Location

When a furnace is installed horizontally with left side down the front cover pressure switch tube must be re-located to the lower port of the collector box cover.

1. Remove tube from front cover pressure switch and collector box cover.
2. Remove rubber plug from bottom collector box port and install on top collector box port.
3. Locate 24" x 1/4" tube in bag assembly.
4. Install one end on front cover pressure switch.
5. Route tube to lower port on collector box cover and cut off excess tubing.

Drain Trap and Lines

In horizontal applications the condensate drain trap is secured to the furnace side panel, suspending it below the furnace. A minimum clearance of 5 ½" below the furnace must be provided for the drain trap. Additionally, the appropriate downward piping slope must be maintained from the drain trap to the drain location. Refer to *Condensate Drain Trap and Lines* for further details. If the drain trap and drain line will be exposed to temperatures near or below freezing, adequate measures must be taken to prevent condensate from freezing.

INSTALLATION CONSIDERATIONS

Leveling

Leveling ensures proper condensate drainage from the heat exchanger. For proper flue pipe drainage, the furnace must be level lengthwise from end to end. The furnace should have a slight tilt from back to front with the access doors downhill from the back panel approximately 1/2 to 3/4 inches. The slight tilt allows the heat exchanger condensate, generated in the recuperator coil, to flow forward to the recuperator coil front cover.

Alternate Vent/Flue and Combustion Air Connections

In horizontal installations provisions for alternate flue and combustion air piping are available for upflow furnaces with left discharge and counterflow furnaces with right air discharge. This configuration allows the flue and combustion air piping to be run vertically through the side of the furnace. Refer to the "Recommended Installation Positions" figure for further detail. The standard piping connections may also be used in these positions. Refer to *Vent/Flue Pipe and Combustion Air Pipe* for details concerning the conversion to the alternate vent/flue and combustion air connections.

When using the horizontal alternate vent configuration, you must use the RF000142 vent drain kit. See following illustration.

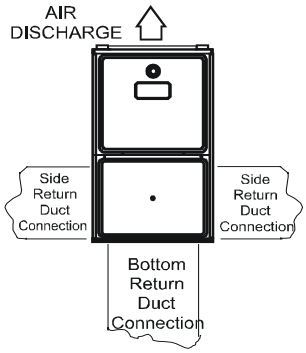

UPFLOW UPRIGHT

Alternate Vent/Flue Location

Figure 3A

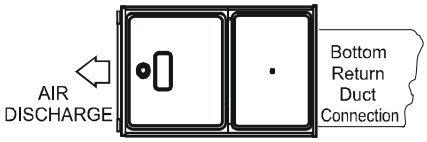

UPFLOW HORIZONTAL LEFT AIR DISCHARGE

Figure 3B

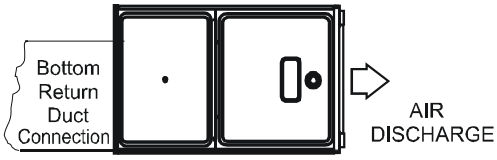

UPFLOW HORIZONTAL RIGHT AIR DISCHARGE

Figure 3C

Recommended Installation Positions

Alternate Electrical and Gas Line Connections

This furnace has provisions allowing for electrical and gas line connections through either side panel. In horizontal applications the connections can be made either through the "top" or "bottom" of the furnace.

Drain Pan

A drain pan must be provided if the furnace is installed above a conditioned area. The drain pan must cover the entire area under the furnace (and air conditioning coil if applicable).

Freeze Protection

Refer to *Horizontal Applications and Conditions - Drain Trap and Lines.*

WARNING

Possible property damage, personal injury or death may occur if the correct conversion kits are not installed. The appropriate kits must be applied to ensure safe and proper furnace operation. All conversions must be performed by a qualified installer or service agency.

Gas	Altitude	Kit	Orifice	Manifold Pressure		Pressure Switch Change
				High Stage	Low Stage	
Natural	0-7000	None	#45	3.5" w.c.	1.9" w.c.	None
Propane		LPM-08* [1]	1.25mm	10.0" w.c.	6.0" w.c.	None

[1] LPM-08* supports both Honeywell and White-Rodgers 2-stage valves

NOTE: In Canada, gas furnaces are only certified to 4500 feet.

Propane Gas/High Altitude Installations

This furnace is shipped from the factory configured for natural gas at standard altitude. Propane gas installations require an orifice change to compensate for the energy content difference between natural and propane gas.

For furnaces being converted to LP gas, it is strongly recommended that a LPLP03 kit also be installed. The use of this kit will prevent the furnace from firing when the LP gas supply pressure is too low to support proper combustion.

INSTALLATION CONSIDERATIONS

High altitude installations may require both a pressure switch and an orifice/spring change. These changes are necessary to compensate for the natural reduction in the density of both the gas fuel and the combustion air at higher altitude.

For installations above 7000 feet, please refer to the furnace Specification Sheets for required kit(s).

Contact the distributor for a tabular listing of appropriate manufacturer's kits for propane gas and/or high altitude installations. The indicated kits must be used to insure safe and proper furnace operation. All conversions must be performed by a qualified installer, or service agency.

Vent/Flue Pipe & Combustion Air Pipe

This manual will refer to the pipe that discharges products of combustion to the outdoors as the "vent" pipe or "flue" pipe. The pipe that supplies air for combustion to the furnace will be referred to as the "intake" pipe or "combustion air" pipe. A condensing gas furnace achieves its high level of efficiency by extracting almost all of the heat from the products of combustion and cooling them to the point where condensation takes place. Because of the relatively low flue gas temperature and water condensation requirements, PVC or ABS are typically used venting and intake pipe materials. In Canada ABS is not an approved vent pipe material but it is permissable to use as combustion air pipe material.

In addition to PVC and ABS pipe and fittings, Innoflue® by Centrotherm Eco Systems and PolyPro® by M&G Duravent are also approved vent and combustion air materials for installations in the U.S.A. and Canada. Manufacturers Installation instructions for these products must be followed. These products have specific instructions for installing, joining and terminating. Do not mix materials or components of one manufacturer with materials or components of another manufacturer.

All furnaces are manufactured with 2" vent / intake pipe and connectors. For furnaces requiring installation of 3" pipe, the transition from 2" to 3" should be done as close to the furnace as practically possible.

This furnace must not be connected to Type B, BW, or L vent or vent connector, and must not be vented into any portion of a factory built or masonry chimney except when used as a pathway for PVC as described later in this section. Never common vent this appliance with another appliance or use a vent which is used by a solid fuel appliance. Do not use commercially available "no hub connectors" other than those shipped with this product.

It is the responsibility of the installer to follow the manufacturers' recommendations and to verify that all vent/flue piping and connectors are compatible with furnace flue products. Additionally, it is the responsibility of the installer to ensure that all piping and connections possess adequate structural integrity and support to prevent flue pipe separation, shifting, or sagging during furnace operation.

⚠ WARNING

UPON COMPLETION OF THE FURNACE INSTALLATION, CAREFULLY INSPECT THE ENTIRE FLUE SYSTEM BOTH INSIDE AND OUTSIDE OF THE FURNACE TO ASSURE IT IS PROPERLY SEALED. LEAKS IN THE FLUE SYSTEM CAN RESULT IN SERIOUS PERSONAL INJURY OR DEATH DUE TO EXPOSURE TO FLUE PRODUCTS, INCLUDING CARBON MONOXIDE.

⚠ WARNING

FAILURE TO FOLLOW THESE INSTRUCTIONS CAN RESULT IN BODILY INJURY OR DEATH. CAREFULLY READ AND FOLLOW ALL INSTRUCTIONS GIVEN IN THIS SECTION.

DUAL CERTIFICATION: NON-DIRECT/DIRECT VENT

This furnace is dual certified and may be installed as a non-direct vent (single pipe) or direct vent (dual pipe) appliance. A *non-direct vent* installation requires only a vent/flue pipe, while a *direct vent* installation requires both a vent/flue pipe and a combustion air intake pipe. Refer to the appropriate section for details concerning piping size, length, number of elbows, furnace connections, and terminations.

MATERIALS AND JOINING METHODS

Two-three-inch nominal diameter PVC Schedule 40 pipe meeting ASTM D1785, PVC primer meeting ASTM F656, and PVC solvent cement meeting ASTM D2564 specifications must be used. Fittings must be DWV type fittings meeting ASTM D2665 and ASTM D3311. Carefully follow the manufacturer's instructions for cutting, cleaning, and solvent cementing of PVC.

The use of Schedule 40 PVC cellular core DWV meeting ASTM F891-1 or ABS cellular core (Foam Core) plastic pipe is also acceptable as a flue/vent and intake pipe material. PVC primer meeting ASTM F656 and PVC solvent cement meeting ASTM D2564 specifications must be used. Fittings must be DWV type fittings meeting ASTM D2665 and ASTM D3311. Carefully follow the manufactures instructions for cutting, cleaning and solvent cementing of PVC.

For Canadian installations; field supplied PVC venting materials must be UL S636 listed.

NOTE: Requirement does not apply to the combustion air pipe.

As an alternative to PVC pipe, primer, solvent cement, and fittings, ABS materials which are in compliance with the following specifications may be used. Two-or-three-inch ABS Schedule 40 pipe must meet ASTM D1527 and, if used in Canada, must be CSA listed. Solvent cement for ABS to ABS joints must meet ASTM D2235 and, if used in Canada, must be CSA listed. The solvent cement for the PVC to ABS transition joint must meet ASTM D3138. Fittings must be DWV type fittings meeting ASTM D2661 and ASTM D3311 and, if used in Canada, must be CSA listed. Carefully follow the manufacturers' instructions for cutting, cleaning, and solvent cementing PVC and/or ABS.

INSTALLATION CONSIDERATIONS

All 90° elbows must be medium radius (1/4 bend DWV) or long radius (Long sweep 1/4 bend DWV) types conforming to ASTM D3311. A medium radius (1/4 bend DWV) elbow measures 3 1/16" minimum from the plane of one opening to the center line of the other opening for 2" diameter pipe, and 4 9/16" minimum for 3" pipe.

Proper Vent/Flue and Combustion Air Piping Practices

Adhere to these instructions to ensure safe and proper furnace performance. The length, diameter, and number of elbows of the vent/flue pipe and combustion air pipe (when applicable) affects the performance of the furnace and must be carefully sized. All piping must be installed in accordance with local codes and these instructions.

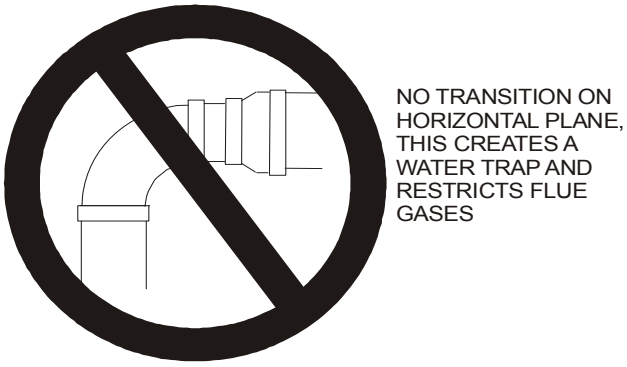

Figure 6

WARNING

To avoid bodily injury, fire or explosion, solvent cements must be kept away from all ignition sources (i.e., sparks, open flames, and excessive heat) as they are combustible liquids. Avoid breathing cement vapors or contact with skin and/or eyes.

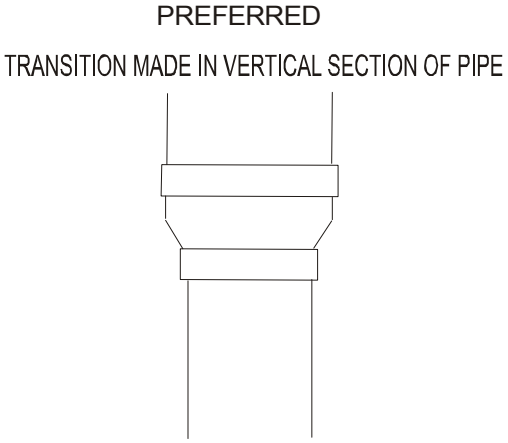

Figure 4

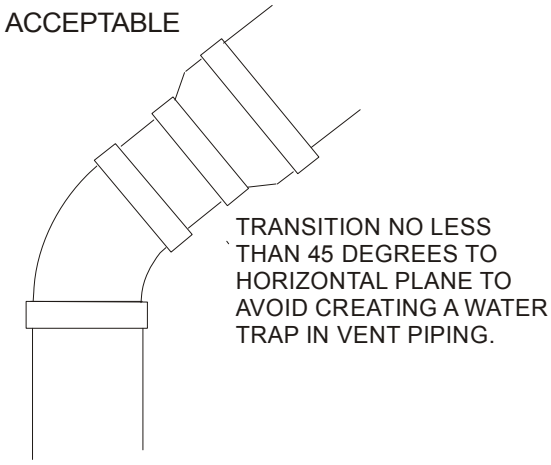

Figure 5

Some models require the use of 3" pipe. Do not transition from a 2" to 3" pipe in a horizontal section of pipe as this may create a water trap.

Piping must be adequately secured and supported to prohibit sagging, joint separation, and/or detachment from the furnace. Horizontal runs of vent/flue piping must be supported every three to five feet and must maintain a 1/4 inch per foot downward slope, back towards the furnace, to properly return condensate to the furnace's drain system. Allowances should be made for minor expansion and contraction due to temperature variations. For this reason, particular care must be taken to secure piping when a long run is followed by a short offset of less than 40 inches.

Precautions should be taken to prevent condensate from freezing inside the vent/flue pipe and/or at the vent/flue pipe termination. All vent/flue piping exposed to freezing temperatures below 35°F for extended periods of time must be insulated with 1/2" thick closed cell foam. Also all vent/flue piping exposed outdoors in excess of the terminations shown in this manual (or in unheated areas) must be insulated with ½" thick closed cell foam. Inspect piping for leaks prior to installing insulation.

Termination Locations

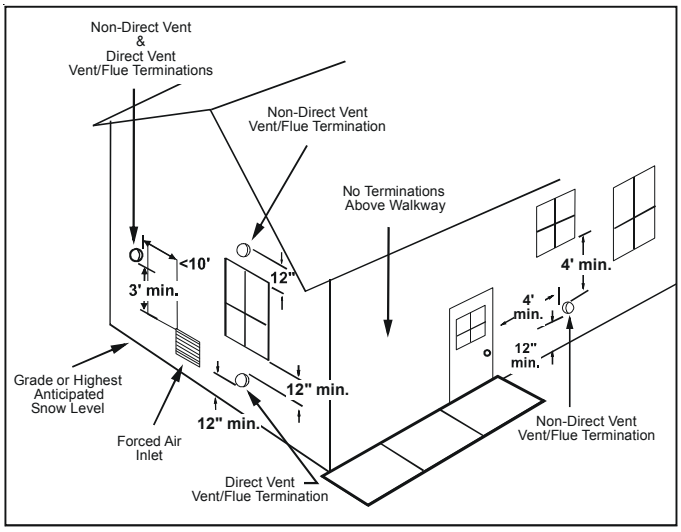

Vent Termination Clearances
Figure 7

INSTALLATION CONSIDERATIONS

NOTE: Refer to *Location Requirements and Considerations* for combustion air contaminant restrictions.

The following bullets and diagram describe the restrictions concerning the appropriate location of vent/flue pipe and combustion air intake pipe (when applicable) terminations. Refer to *Non-Direct Vent (Single Pipe) Piping* and *Direct Vent (Dual Pipe) Piping* located in this section for specific details on termination construction.

- All terminations (flue and/or intake) must be located at least 12 inches above ground level or the anticipated snow level.
- Vent terminations (non-direct and direct vent) must terminate at least 3 feet above any forced air inlet located within 10 feet.

  NOTE: This provision does not apply to the combustion air intake termination of a direct vent application.
- The vent termination of a *non-direct vent* application must terminate at least 4 feet below, 4 feet horizontally from, or 1 foot above any door, window, or gravity air inlet into any building.
- The vent termination of a *direct vent* application must terminate at least 12 inches from any opening through which flue gases may enter a building (door, window, or gravity air inlet).
- The vent termination of vent pipe run vertically through a roof must terminate at least 12 inches above the roof line (or the anticipated snow level) and be at least 12 inches from any vertical wall (including any anticipated snow build up).
- A vent termination shall not terminate over public walkways or over an area where condensate or vapor could create a nuisance or hazard or could be detrimental to the operation of regulators, relief valves, or other equipment.
- The combustion air intake termination of a direct vent application should not terminate in an area which is frequently dusty or dirty.

NOTE: **In Canada, the current edition of CAN/CSA B149.1-15 takes precedence over the preceding termination description.**

Canadian Vent Pipe & Combustion Air Pipe Requirements

All installations in Canada must conform to the requirements of CAN/CSA B149.1-15 code. All vent components, including primer and cement, must be listed to ULC S636. The certified pipe and fittings should be clearly marked with the ULC standard “S636”. The primer and cement used must be of the same manufacturer as the vent system. For Royal Pipe System 636; use GVS-65 Primer (Purple) and GVS-65 PVC Solvent Cement. For IPEX System 636, use PVC/CPVC Primer, Purple or clear. Use PVC Solvent Cement (Gray).

For Canadian installations, ABS may be used as a combustion air pipe only. ABS is not an approved vent material in Canada. If ABS is used as a combustion air pipe, it must be CSA certified. Always follow the manufacturer’s instructions in the use of primer and cement. Do not use primer and cement around potential sources of ignition. Do not use primer or cement beyond its expiration date.

The safe operation, as defined by ULC S636, of the vent system is based on following these installation instructions, the vent system manufacturer’s installation instructions, and proper use of primer and cement. It is recommended under this standard, that the vent system be checked once a year by qualified service personnel. All fire stops and roof flashings used with this system must be UL listed. Acceptability under CAN/CSA B149.1-15 is dependent upon full compliance with all installation instructions. Consult the authority having jurisdiction (gas inspection authority, municipal building department, fire department, etc.) before installation to determine the need to obtain a permit. **IPEX System 636™ is a trademark of IPEX Inc.*

Carefully follow the pipe manufacturers’ instructions for cutting, cleaning, and solvent cementing PVC and/or ABS.

The vent can be run through an existing unused chimney provided the space between the vent pipe and the chimney is insulated and closed with a weather-tight, corrosion-resistant flashing.

Standard Furnace Connections

It is the responsibility of the installer to ensure that the piping connections to the furnace are secure, airtight, and adequately supported.

Vent/Flue Pipe

The vent pipe outlet is sized to accept 2” pipe. Secure vent/flue pipe directly into the furnace fitting with the appropriate glue. Alternately, a small section of 2" pipe may be glued in the furnace socket and a rubber coupling installed to allow removal for future service. Combustion Air and Vent piping should be routed in a manner to avoid contact with refrigerant lines, metering devices, condensate drain lines, etc. If necessary, clearances may be increased by creating an offset using two 45 degree elbows. This joint can be rotated on the fitting to establish maximum clearance between refrigerant lines, metering devices, and condensate drain lines, etc. This joint is the equivalent of one 90 deg. elbow when considering elbow count. (See Figure 7)

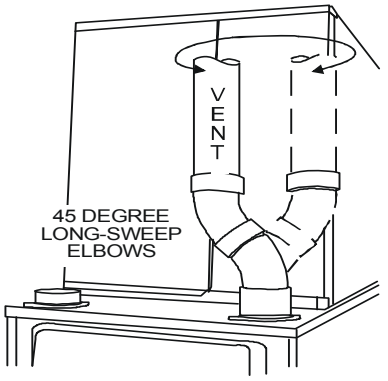

Increased Clearance Configuration
Figure 7

INSTALLATION CONSIDERATIONS

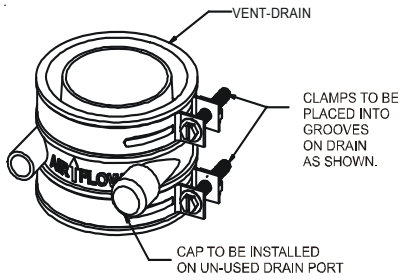

Figure 8

NOTE: For *non-direct vent* installations, a minimum of one 90° elbow should be installed on the combustion air intake coupling to guard against inadvertent blockage.

Combustion Air Pipe

Direct Vent Installations

⚠ WARNING

Edges of sheet metal holes may be sharp. Use gloves as a precaution when removing hole plugs.

On *upflow* units secure the combustion air intake pipe to the air intake coupling by using a take apart rubber coupling supplied with the furnace or a plastic coupling. Also, the intake coupling may be inverted to allow the intake pipe to be glued directly to it. After inverting the coupling, secure it to the furnace top with screws. On *counterflow* units secure the combustion air intake pipe to the air intake coupling using the rubber coupling and worm gear hose clamps provided with the unit. The counterflow rubber coupling allows service removal of air intake piping internal to the furnace blower compartment. The combustion air intake pipe can also be secured directly to the counterflow unit air intake pipe coupling.

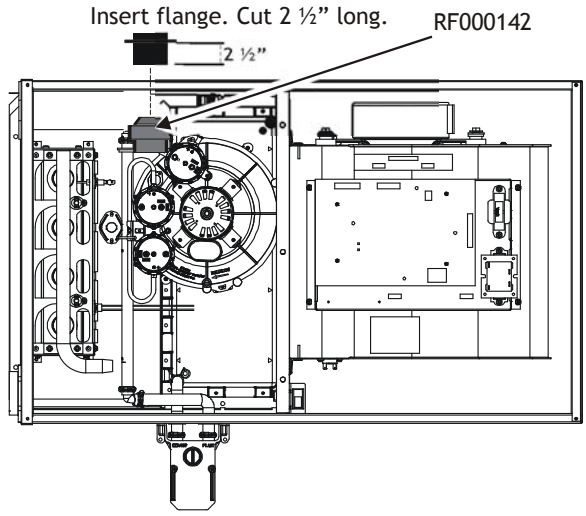

Figure 9

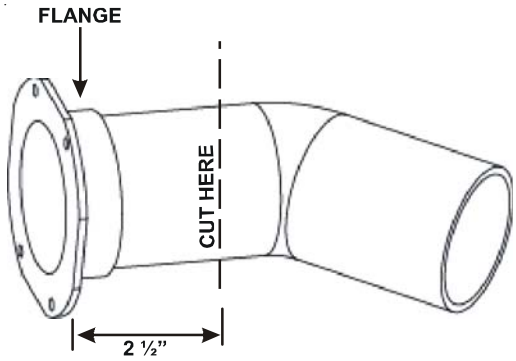

Figure 10

⚠ WARNING

The rubber elbow is not designed to support a load. When the rubber elbow is mounted externally to the furnace cabinet, extreme care must be taken to adequately support field-supplied vent/flue piping, as damage can result in leaks causing bodily injury or death due to exposure to flue gases, including carbon monoxide

COMBUSTION AIR INTAKE OPTIONS: The RF000142 coupling can be secured directly to the furnace intake coupling if condensation is a concern. If the RF000142 is used on the combustion air inlet, it must be installed with the arrow pointing up. It should be noted, the combustion air will actually be moving in a direction opposite of the arrow on the RF000142 coupling. It must have a field supplied, trapped drain tube free-draining to proper condensate disposal location. A loop in the drain tube can serve as a trap. The unused RF000142 drain fitting should be capped. A tee installed in the intake pipe is also an acceptable method of catching condensation. It must have a field supplied, trapped drain tube or pipe, free-draining to proper condensate disposal location. A loop in the drain tube can serve as a trap. (See Figure 9B)

Non-Direct Vent Installations

A minimum of one 90° elbow should be installed on the combustion air intake "coupling" to guard against inadvertent blockage.

Alternate Vent/Flue Location

The alternate vent/flue location is the large hole directly in line with the induced draft blower outlet. To use the alternate vent/flue location refer to the following steps and the "Alternate Vent/Flue Location" figure. This option is not available with counter-flow models.

NOTE: In the horizontal left installation position, a means of condensate collection must be provided to keep vent pipe condensate from entering the draft inducer housing. If the vent drain elbow is eliminated from the installation, an RF000142 kit must be used.

INSTALLATION CONSIDERATIONS

1. Remove the four screws from the vent pipe flange on top the furnace.
2. Remove the internal elbow and vent pipe.
3. Cut 2 ½" from the flange .
4. Remove plastic plug in line with the inducer outlet
5. Install cut end of the flanged section and connect to inducer with rubber coupling supplied with furnace.
6. Install screws removed in step 1 securing flange to cabinet.

CAUTION

BE SURE NOT TO DAMAGE INTERNAL WIRING OR OTHER COMPONENTS WHEN REINSTALLING COUPLING AND SCREWS.

ALTERNATE COMBUSTION AIR PROVISION

(Upflow / Horizontal models only)

When using the alternate venting location, either in a horizontal left side down installation or a vertical installation using down – venting, an alternate combustion air opening can be used. A locating dimple is located on the right side of the furnace cabinet. The locating dimple is 1 7/8" measured from the front edge of the cabinet in line with the knock out. To use the alternate combustion air location:

1. Remove screws and combustion air flange from cabinet.
2. Insert cabinet plug in unused combustion air hole.
3. Drill a pilot hole at the cabinet dimple (size indicated by knockout tool used).
4. Use a knockout tool to create a 3" diameter hole
5. Install combustion air flange and secure with screws re moved in step one.
6. Install screws removed in step 1 securing flange to cabinet.

Direct Vent (2 - Pipe) and Non-Direct Vent (1- Pipe) [6]									
Model	Pipe Size	Number of Elbows							
		1	2	3	4	5	6	7	8
MVM970603BNA	2 or 2 1/2	115	110	105	100	95	90	85	80
	3	137	130	123	116	109	102	95	88
MVM970803BNA	2 or 2 1/2	115	110	105	100	95	90	85	80
	3	147	140	133	126	119	112	105	98
MVM970804CNA	2 or 2 1/2	60	55	50	45	40	35	30	25
	3	120	113	106	99	92	85	78	71
MVM971005CNA	2 or 2 1/2	40	35	30	25	20	15	10	5
	3	144	137	130	123	116	109	102	95
MVM971205DNA	2 or 2 1/2	40	35	30	25	20	15	10	5
	3	144	137	130	123	116	109	102	95
CVM970603BNA	2 or 2 1/2	95	90	85	80	75	70	65	60
	3	144	137	130	123	116	109	102	95
CVM970803BNA	2 or 2 1/2	95	90	85	80	75	70	65	60
	3	144	137	130	123	116	109	102	95
CVM970804CNA	2 or 2 1/2	60	55	50	45	40	35	30	25
	3	120	113	106	99	92	85	78	71
CVM971005CNA	2 or 2 1/2	40	35	30	25	20	15	10	5
	3	103	96	89	82	75	68	61	54

NON-DIRECT VENT (SINGLE PIPE) PIPING

Non-direct vent installations require only a vent/flue pipe. The vent pipe can be run horizontally with an exit through the side of the building or run vertically with an exit through the roof of the building. The vent can also be run through an existing *unused* chimney; however, it must extend a minimum of 12 inches above the top of the chimney. The space between the vent pipe and the chimney must be closed with a weather-tight, corrosion-resistant flashing.

Although *non-direct vent* installations do not require a combustion air intake *pipe*, a minimum of one 90° elbow should be attached to the furnace's combustion air intake *if*: an upright installation uses the standard intake location, or a horizontal installation uses the alternate air intake location. This elbow will guard against inadvertent blockage of the air intake.

VENT/FLUE PIPE LENGTHS AND DIAMETERS

NOTE: For installations at or above 7,000 feet altitude, use 3" venting. If either a 90 degree or 45 degree elbow is used for termination, it must be pointed downward.

Refer to the following table for applicable length, elbows, and pipe diameter for construction of the vent/flue pipe system of a non-direct vent installation. In addition to the vent/flue pipe, a single 90° elbow should be secured to the combustion air intake to prevent inadvertent blockage. The tee used in the vent/flue termination must be included when determining the number of elbows in the piping system.

1) Maximum allowable limits listed on individual lengths for inlet and flue and NOT a combination.
2) Minimum requirement for each vent pipe is five (5) feet in length and one elbow/tee.
3) Tee used in the vent/flue termination must be included when determining the number of elbows in the piping system
4) 2 ½" or 3" diameter pipe can be used in place of 2" diameter pipe.
5) Increased Clearance Configurations using (2) 45 deg. Long Sweep elbows should be considered equivalent to one 90 degree elbow.
6) One 90° elbow should be secured to the combustion air intake connection.

NOTE: For installations at or above 7,000 feet altitude, use 3" venting.

INSTALLATION CONSIDERATIONS

Vent/Flue Pipe Terminations

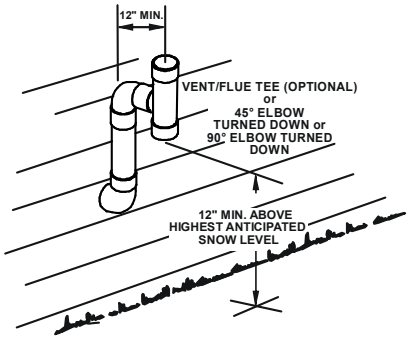

Horizontal Termination (Single Pipe)
Above Highest Anticipated Snow Level
Figure 11

NOTE: If either a 90 degree or 45 degree elbow is used for termination, it must be pointed downward.

The vent/flue pipe may terminate vertically, as through a roof, or horizontally, as through an outside wall.

Vertical vent/flue pipe terminations should be as shown in the following figure. Refer to *Vent/Flue Pipe and Combustion Air Pipe - Termination Locations* for details concerning location restrictions. The penetration of the vent through the roof must be sealed tight with proper flashing such as is used with a plastic plumbing vent.

Horizontal vent/flue pipe terminations should be as shown in the following figure. Refer to *Vent/Flue Pipe and Combustion Air Pipe.* To secure the pipe passing through the wall and prohibit damage to piping connections, a coupling should be installed on either side of the wall and solvent cemented to a length of pipe connecting the two couplings. The length of pipe should be the wall thickness plus the depth of the socket fittings to be installed on the inside and outside of the wall. The wall penetration should be sealed with silicone caulking material.

NOTE: Terminate both pipes in the same pressure zone (same side of roof, no major obstacles between pipes, etc.).

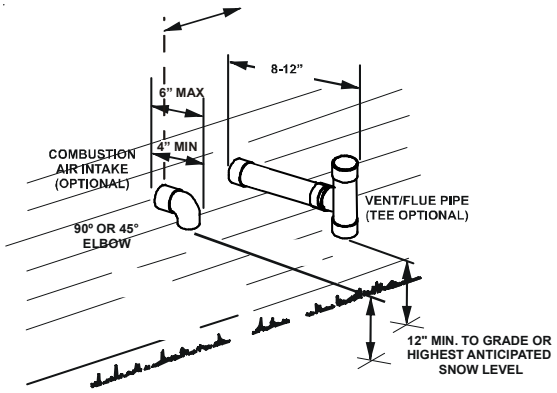

Standard Horizontal Terminations (Dual Pipe)
Figure 15

Direct Vent (Dual Pipe) Piping

Direct vent installations require both a combustion air intake and a vent/flue pipe. The pipes may be run horizontally and exit through the side of the building or run vertically and exit through the roof of the building. The pipes may be run through an existing *unused* chimney; however, they must extend a minimum of 12 inches above the top of the chimney. The space between the pipes and the chimney must be closed with a weather tight, corrosion resistant flashing. Both the combustion air intake and a vent/flue pipe terminations must be in the same atmospheric pressure zone. Refer to *Vent/Flue and Combustion Air Pipe - Termination Locations* or *Concentric Vent Termination* for specific details on termination construction. For details concerning connection of pipes to the furnace, refer to the *Vent/Flue Pipe and Combustion Pipe - Standard Furnace Connections* or *Alternate Furnace Connections.*

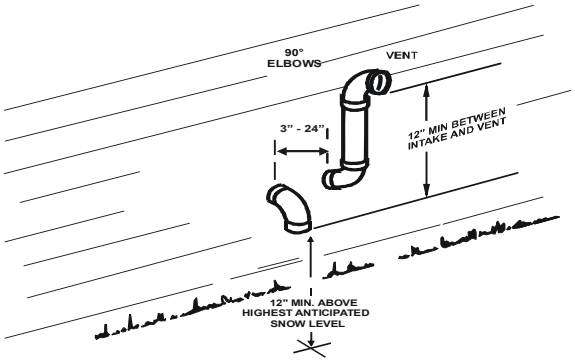

Alternate Horizontal Vent Termination (Dual Pipe)
Figure 16

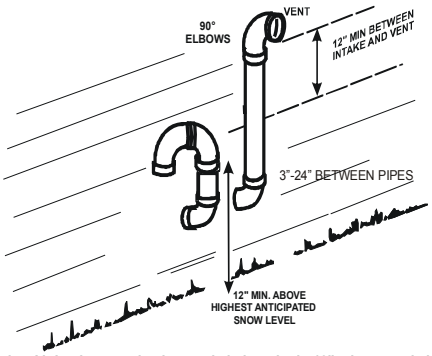

Combustion Air Intake may also be snorkeled to obtain 12" min ground clearance.
Alternate Vent Termination Above Anticipated Snow Level
(Dual Pipe)
Figure 17

If the combustion air intake pipe is to be installed above a finished ceiling or other area where dripping of condensate will be objectionable, insulation of the combustion air pipe may be required. Use ½" thick closed cell foam insulation such as Armaflex™ or Insultube™ where required.

INSTALLATION CONSIDERATIONS

DOWN VENTING UPFLOW MODEL FURNACES ONLY

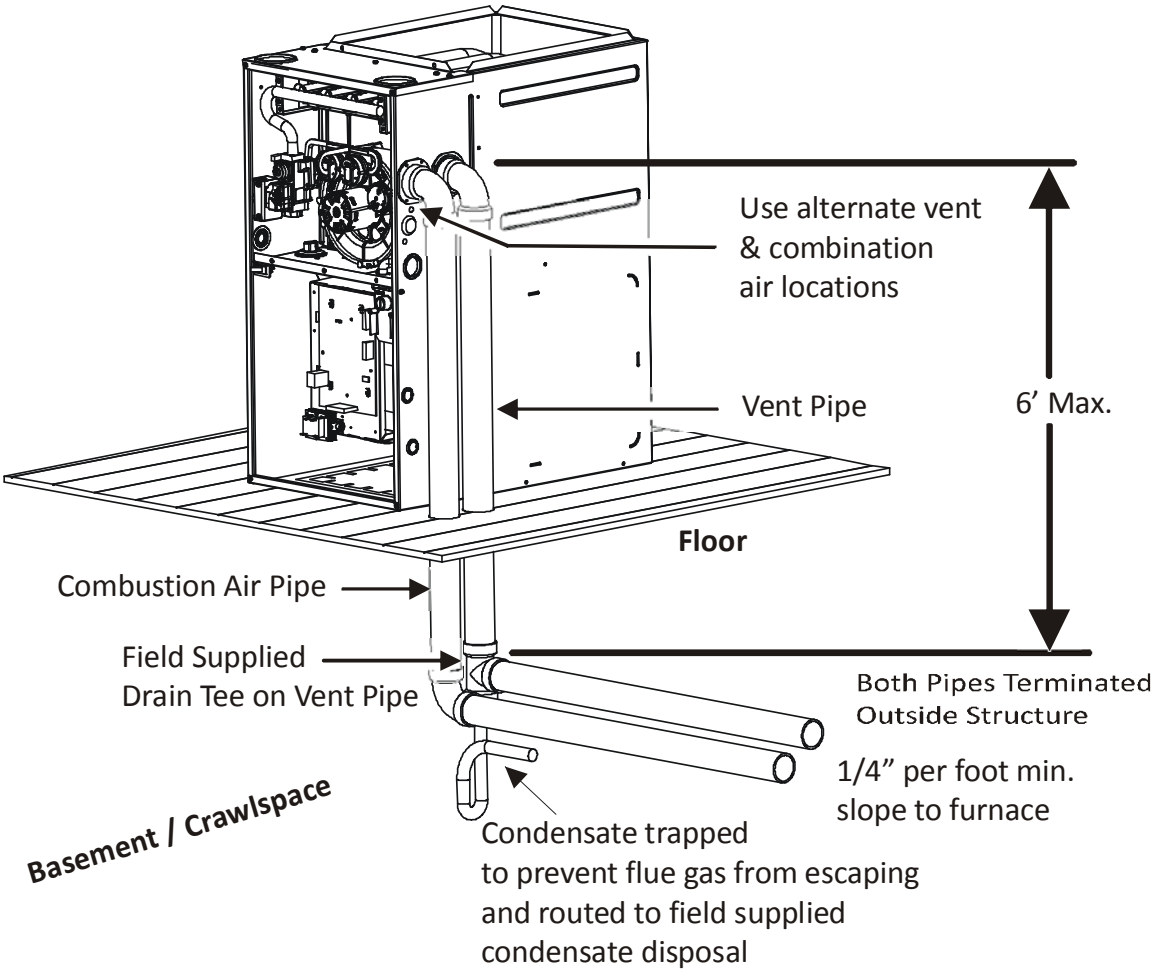

All piping and fittings must be joined per material manufacturers specifications to prevent separation and flue gas leaks.

Figure 12

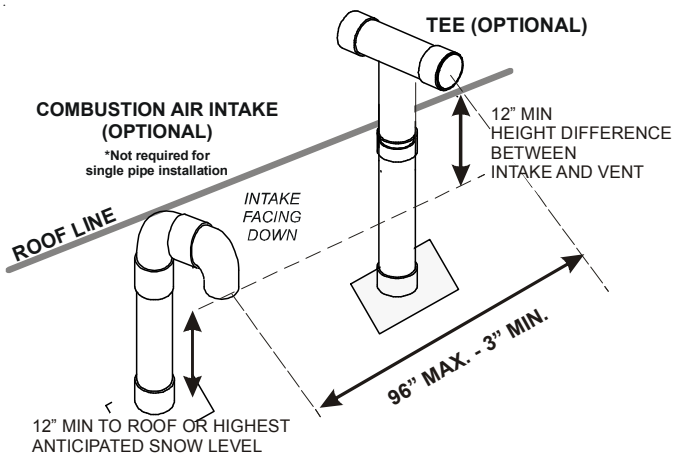

Figures 13

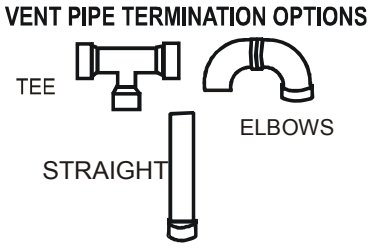

Figure 14

INSTALLATION CONSIDERATIONS

Vent/Flue and Combustion Air Pipe Terminations

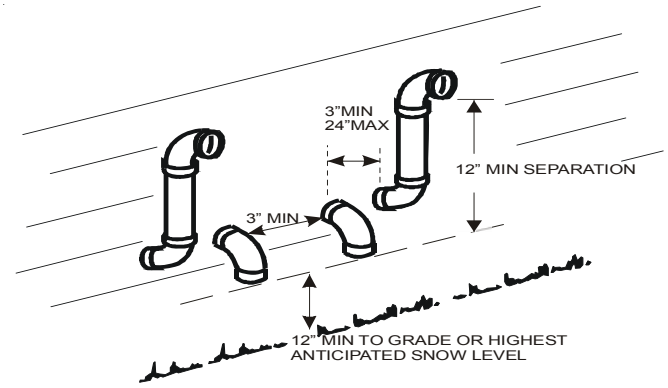

Termination of Multiple Direct Vent Furnaces
Figure 18

The vent/flue and combustion air pipes may terminate vertically, as through a roof, or horizontally, as through an outside wall.

Vent/Intake Terminations For Installation of Multiple Direct Vent Furnaces

If more than one direct vent furnace is to be installed vertically through a common roof top, maintain the same minimum clearances between the exhaust vent and air intake terminations of adjacent units as with the exhaust vent and air intake terminations of a single unit.

If more than one direct vent furnace is to be installed horizontally through a common side wall, maintain the clearances as in the following figure. Always terminate all exhaust vent outlets at the same elevation and always terminate all air intakes at the same elevation.

Concentric Vent Termination

Refer to the directions provided with the Concentric Vent Kit (DCVK) for installation specifications.

Side Wall Vent Kit

This kit is to be used with 2" or 3" direct vent systems. The vent kit must terminate outside the structure and may be installed with the intake and exhaust pipes located side-by-side or with one pipe above the other. These kits are **NOT** intended for use with single pipe (indirect vent) installations.

Refer to the directions furnished with the Side Wall Vent Kit (p/n 0170K00000S or 0170K00001S) for installation specifications.

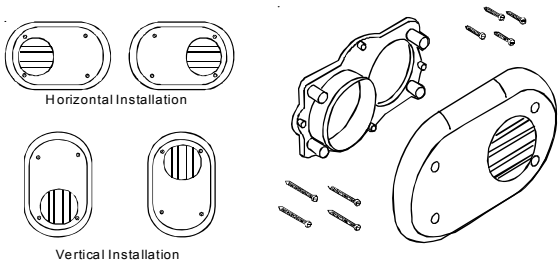

Side Wall Vent Kit
Figure 19

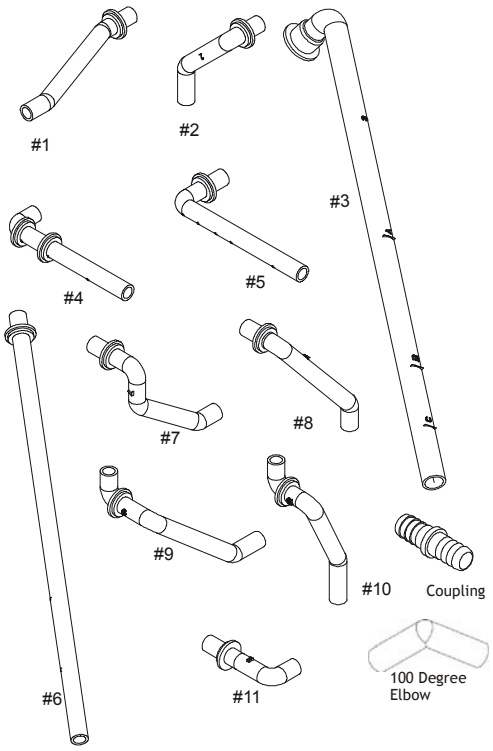

Figure 20

***NOTE:** Drain components shown for information purposes only.*

Condensate Drain Lines & Drain Trap

A condensing gas furnace achieves its high level of efficiency by extracting heat from the products of combustion to the point where condensation takes place. The condensate must be collected in the furnace drain trap and routed to an appropriate drain location in compliance with local and national codes.

INSTALLATION CONSIDERATIONS

Follow the bullets listed below when installing the drain system. Refer to the following sections for specific details concerning furnace drain trap installation and drain hose hook ups.

- The drain trap supplied with the furnace must be used.
- The drain trap must be primed at time of installation.
- The drain line between furnace and drain location must meet local and nation codes.
- The drain line between furnace and drain location must maintain a 1/4 inch per foot downward slope toward the drain.
- Do not trap the drain line in any other location than at the drain trap supplied with the furnace.
- If the drain line is routed through an area which may see temperatures near or below freezing, precautions must be taken to prevent condensate from freezing within the drain line.
- If an air conditioning coil is installed with the furnace, a common drain may be used. An open tee must be installed in the drain line, near the cooling coil, to relieve positive air pressure from the coil's plenum. This is necessary to prohibit any interference with the function of the furnace's drain trap.

NOTE: In vertical installations, air conditioning coil condensate may drain into the furnace trap as long as there is a trap between the coil and the furnace trap and the drain pipe is not terminating below the water level of the furnace trap.

General Drain Information

All furnace models come with a factory installed drain trap. For vertical installations, the trap will remain in the factory position except for a counterflow when the installer desires the drain to exit the right side. All furnace models installed horizontally require the trap to be relocated. Many drain hoses have a built–in grommet which will provide a cabinet seal when installed. See instructions below for your model and installation position. ***NOTE: Both sides of the drain trap must be primed prior to initial furnace start up***

Field Supplied Drain

Drain the furnace and air conditioning coil if applicable, in compliance with code requirements. In horizontal or counterflow installations, a field installed rubber coupling will allow the drain trap to be removed for cleaning. The drain trap must be primed before initial furnace start up. When an air conditioning coil drain is connected to the field supplied furnace drain, it must be vented, with an open tee installed at a height no higher than the bottom of the furnace collector box to prevent air conditioning condensate from backing up into the furnace if the common drain was blocked.

Upflow Model Installed Vertically

The trap and factory installed hoses remain as shipped. The furnace drain may exit either the right or left side of the furnace cabinet. Both sides of the cabinet have two .875" diameter holes which can be used interchangeably for drain and low voltage wiring purposes. If a higher drain exit is needed, a .875" diameter hole may be added in the area shown in Figure 22. Any unused cabinet opening must be sealed. Do not allow drain hose to sag or trap water.

Drain Exiting Right Side

1. Locate and Install the 45º pipe / hose drain coupling from the outside of the cabinet (barbed end goes in the cabinet) through hole in the right side of the cabinet and secure with two field supplied #8 self-tapping screws (see Figure 23).
2. Locate the long drain hose #3 and cut at line "A" .
3. Install large end of hose #3 to trap outlet and secure with 1.25" clamp.
4. Install smaller end of hose #3 on 45º elbow and secure with 1" clamp.
5. Refer to Field Supplied Drain section for instructions on field supplied / installed drain on outlet of furnace trap.

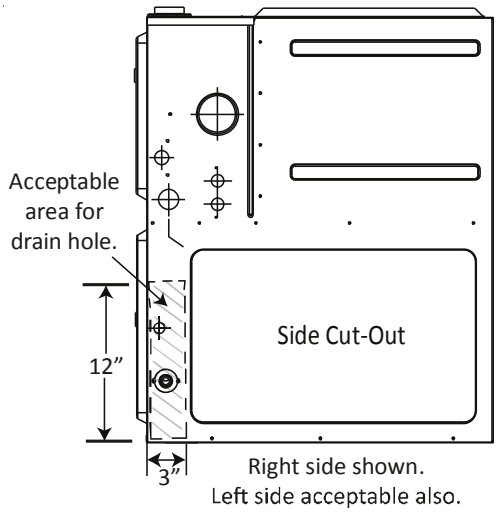

Figure 21

INSTALLATION CONSIDERATIONS

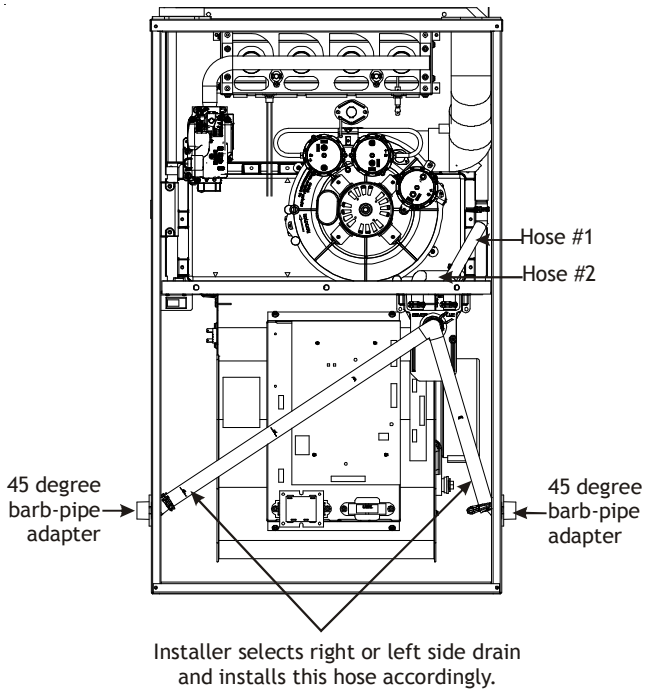

Figure 22

Drain Exiting Left Side

1. Install the 45 degree pipe / hose drain coupling from the outside of the cabinet (barbed end goes in the cabinet) through the hole in the left side of the cabinet and secure with two field supplied #8 self-tapping screws (see Figure 23).
2. Locate the long drain hose #3 and cut at “B” line for a 17.5" cabinet; cut at line “C” for a 21" cabinet; do not cut for a “D” width cabinet.
3. Install large end of hose #3 to trap outlet and secure with 1.25" clamp.
4. Install smaller end of hose #3 on 45º elbow and secure with 1" clamp.
5. Refer to Field Supplied Drain section for instructions on field supplied / installed drain on outlet of furnace trap.

Upflow Model Installed Horizontally with Right Side Down

Minimum 5 ½" clearance is required for the drain trap beneath the furnace.

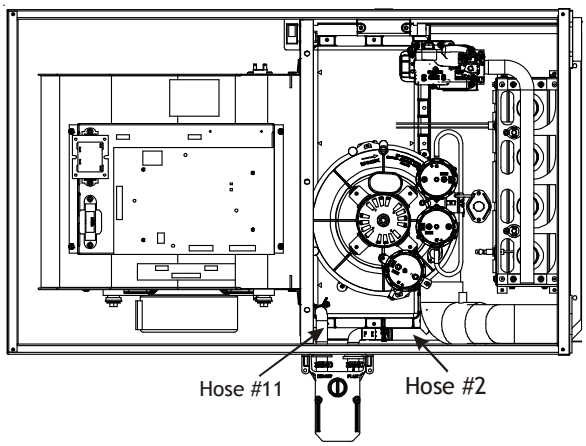

Figure 23

1. Remove the clamps from both ends of the drain hoses.
2. Remove the two screws holding the drain trap to the blower deck.
3. Remove the trap and two hoses from the blower deck
4. Remove the two plugs from the right side of the cabinet and install them in the blower deck.
5. (Draining the Vent Elbow) Locate hose #2 (factory installed) and cut 1" away from the 45 degree bend, discard the 45 degree section. Insert hose #2 from outside the cabinet through the cabinet drain hole nearest the top. Secure it to the barbed fitting in the elbow with a red clamp.
6. (Draining the Collector Box) Install the non-grommet end of hose #11 from outside the cabinet in the bottom drain hole. Install on collector box and secure with a silver clamp.
7. Use two silver clamps and secure the hoses to drain trap. The trap outlet faces the front of the furnace. Secure the trap to the cabinet using two screws removed in step 2 by inserting the two screws through the large set of holes in the top mounting tabs of the trap into the two predrilled holes in the side of the cabinet.
8. Refer to Field Supplied Drain section for instructions on field supplied / installed drain on outlet of furnace trap.

Upflow model installed horizontally with left side down

Minimum 5 ½" clearance is required for the drain trap beneath the furnace.

**Also see Front Cover Pressure Switch Tube Location on page 9.*

INSTALLATION CONSIDERATIONS

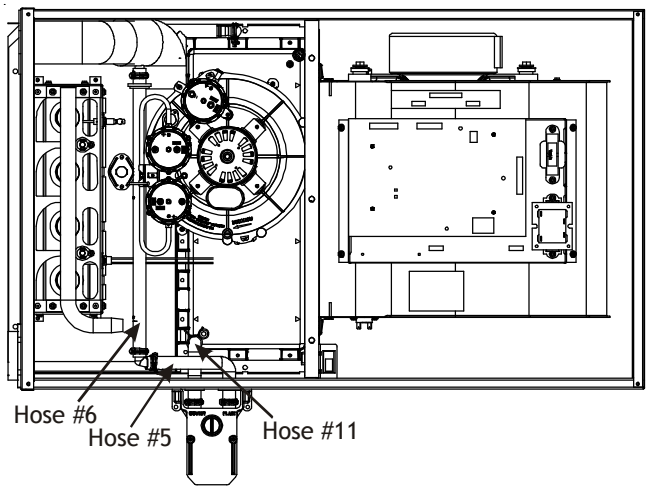

Figure 24

1. Remove the clamps from the two drain tubes on the trap.
2. Remove the two screws holding the drain trap to the blower deck.
3. Remove the trap and hoses from the blower deck .
4. Remove the two plugs from the left side of the cabinet and install them in the blower deck.
5. (Draining the Vent Elbow) Locate hose #6. Measuring from the non-grommet end; cut off and discard 1 ½" for a "D" width cabinet, 5" for a "C" width cabinet, 8 ½" for a "B" width cabinet.
6. Remove the rubber plug from vent – drain elbow side port. Place hose #6 on the vent – drain elbow side port and secure with a silver clamp .
7. **Unused vent-drain elbow drip leg port must be sealed to prevent flue gases from escaping. Insert the rubber plug removed in Step 6 into the unused elbow drain port; Inserting a blunt tool such as a 3/16" Allen wrench into the center of the rubber plug will stretch the plug and allow complete insertion.**
8. Locate hose #5 and cut 3" from the non-grommet end. Discard the section without the grommet.
9. Insert the cut end of tube #5 through the lower cabinet drain hole.
10. Connect hose #6 & hose #5 using 100º elbow and secure with two red clamps
11. (Draining the Collector Box) Remove cap from left side collector box drain port (bottom in horizontal left position) and install it on the right side (top) collector box drain port.
12. Install the non-grommet end of hose #11 from outside the cabinet in the upper drain hole. Install on collector box and secure with a silver clamp.
13. Use two silver clamps and secure the hoses to drain trap. The trap outlet faces the front of the furnace. Secure the trap to the cabinet using two screws removed in step 2 by inserting the two screws through the large set of holes in the top mounting tabs of the trap into the two predrilled holes in the side of the cabinet.
14. Refer to Field Supplied Drain section for instructions on field supplied / installed drain on outlet of furnace trap.

Upflow Model Installed Horizontally With Left Side Down - Alternate

* Also see Front Cover Pressure Switch Tube Location on page 9.

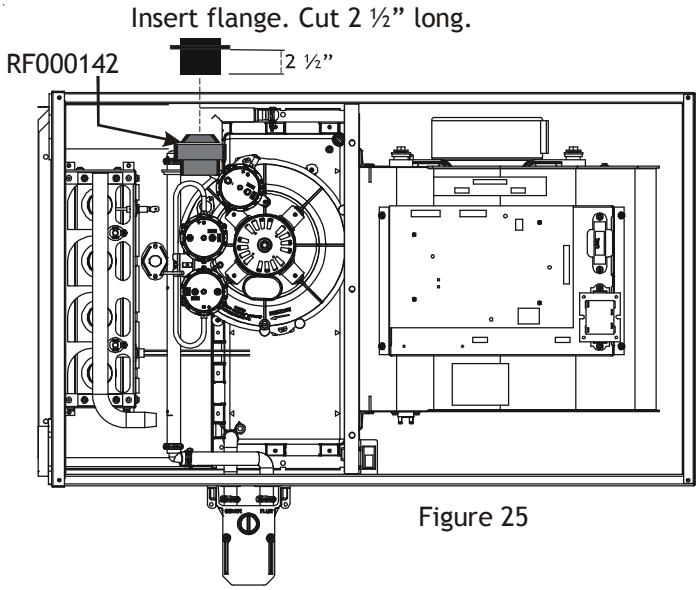

Figure 25

1. (Draining the RF000142 Coupling) Locate hose #2 (factory installed). Cut off and discard the 45°radius end.
2. Install 90°radius end of hose #2 on RF000142 drain outlet and secure with a red clamp.
3. Insert coupling in hose #2 and secure with a red clamp.
4. Locate hose #5 and cut 3" from the non-grommet end. Discard the section without the grommet.
5. Insert the cut end of tube #5 through the lower cabinet drain hole.
6. Insert 100 degree elbow in the cut end of hose #5.
7. Locate hose #6. Using red clamps, connect between the coupling and 100 degree elbow, cutting off excess tubing.
8. (Draining the Collector Box) Remove cap from left side collector box drain port (bottom in horizontal left position) and install it on right side (top) collector box drain port.
9. Install the non-grommet end of hose #11 from outside the cabinet in the upper drain hole. Install on collector box and secure with a silver clamp.
10. Use two silver clamps and secure the hoses to drain trap. The trap outlet faces the front of the furnace. Secure the trap to the cabinet using two screws removed in step 2 by inserting the two screws through the large set of holes in the top mounting tabs of the trap into the two predrilled holes in the side of the cabinet.

INSTALLATION CONSIDERATIONS

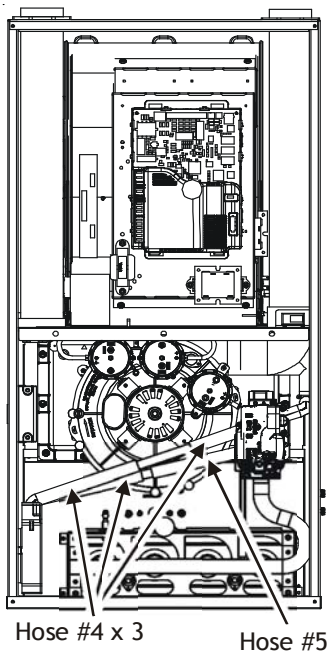

Figure 26

CounterFlow Model Installed Vertically

The furnace drain may exit the right or left side of the furnace cabinet (left side preferred) Trap and factory installed hoses remain as shipped if the drain will exit the left side of the cabinet. Draining from the right side requires re-location of the trap to outside the cabinet.

Drain Exiting Left Side

1. Install a field supplied rubber coupling secured with a 1 ¼" clamp to enable removing the trap for future cleaning. Alternately, a PVC fitting may be glued on the trap outlet.
2. Install drain per local and National codes.

Drain Exiting Right Side

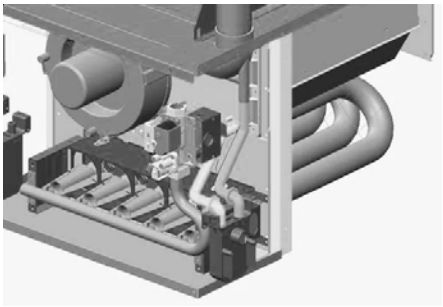

Figure 27

1. Remove hose clamps and hoses from trap.
2. Remove trap.
3. (Draining the Vent Elbow) Insert the non-grommet end hose #10 into the cabinet back drain hole. Insert a coupling into the drip leg of the vent-drain elbow and secure with a silver clamp. Secure hose #10 on vent-drain elbowbarb fitting with a silver clamp.
4. (Draining the Collector Box) Insert non-grommet end of hose #9 into the cabinet front drain hole and secure on collector box drain port with a silver clamp.
5. Mate the drain trap inlets to the hoses and secure with silver clamps.
6. Line up the trap mounting holes with the pre-drilled holes in the furnace and secure with 2 screws removed in step 2.
7. Refer to Field Supplied Drain section for instructions on field supplied / installed drain on outlet of furnace trap.

Counterflow Model Installed Horizontally with Right Side Down

Minimum 5 ½" clearance is required for the drain trap beneath the furnace.

NOTE: For horizontal installations, some of the required hoses are found in the factory-installed hose assemblies. Remove the hose clamps to obtain the respective hoses needed for installation, and install per the following directions.

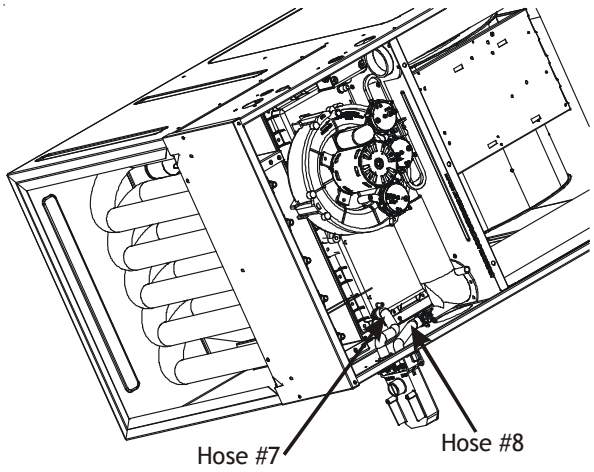

Figure 29

1. Remove the drain trap and factory installed drain tube assemblies.
2. Remove two 1" plugs from right side of cabinet
3. (Draining the Collector Box) From outside the cabinet, insert the non-grommet end hose #7 into the back drain hole and secure to collector box drain port using a silver clamp.
4. (Draining the Vent Elbow) Insert the straight barbed coupling into the vent – drain elbow drip leg and secure with a red clamp.
5. From outside the cabinet, insert the non-grommet end of

hose #8 into the front cabinet drain hole and secure on the vent - drain elbow barb fitting using a red clamp.

6. Using the two sheet metal screws provided in the cabinet, secure the trap to the furnace.
7. Refer to Field Supplied Drain section for instructions on field supplied / installed drain on outlet of furnace trap.

Counterflow Model Installed Horizontally with Left Side Down

** Also see Front Cover Pressure Switch Tube Location on page 9.*

Minimum 5 ½" clearance is required for the drain trap beneath the furnace.

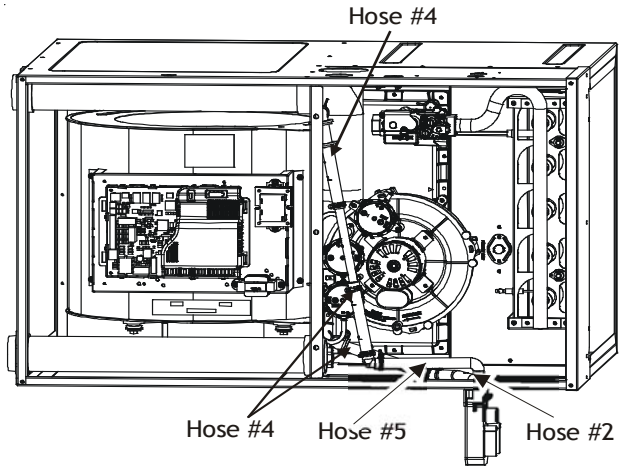

Figure 30

1. Remove the factory installed drain trap and hose assemblies. Leave the 100° elbow inserted and clamped in the vent-drain elbow.
2. Remove two 1"plugs from left side of cabinet
3. (Draining the Collector Box) Remove the cap from the left side of the collector box drain port (bottom in horizontal left position) and install it on right side drain port.
4. Place radius end of hose #4 (factory installed) on the collector box drain port and secure with a silver clamp.
5. Insert hose #2 from outside the cabinet in the front drain hole.
6. Connect hose #4 & hose #2 together using a straight barbed coupling and two gold clamps (factory installed).
7. (Draining the Vent Elbow) Remove rubber plug from vent – drain elbow side port.
8. ***The un-used vent-drain elbow drip leg port must be plugged to prevent flue gases from escaping.***

   Insert rubber plug removed in step 7 into the 100° elbow. (Inserting a blunt tool such as a 3/16" Allen wrench into the center of the rubber plug will stretch the plug and allow complete insertion).
9. Place radius end of hose #4 on the side port of vent – drain elbow and secure with a gold clamp.
10. Insert a ½" diameter PVC pipe (factory installed) into hose #4 and secure with a gold clamp.
11. Insert the non-grommet end of hose #5 (factory installed) from outside the cabinet in the back drain hole.
12. Insert 100º elbow in hose #5 and secure with a red clamp.
13. Locate hose #4 and cut a cut off a 4" straight section and discard the radius end.
14. Connect the 4" straight section of hose #4 to the 100º elbow and the PVC pipe and secure with red clamps.
15. Connect the hoses to the trap inlets and secure with silver clamps, drain trap outlet must point to the original bottom of the furnace.
16. Using the two sheet metal screws provided in the cabinet, secure the trap to the furnace.
17. Refer to Field Supplied Drain section for instructions on field supplied / installed drain on outlet of furnace trap.

Electrical Connections

WARNING

HIGH VOLTAGE !

To avoid the risk of electrical shock, wiring to the unit must be polarized and grounded.

WARNING

HIGH VOLTAGE !

To avoid personal injury or death due to electrical shock, disconnect electrical power before servicing or changing any electrical wiring.

CAUTION

Label all wires prior to disconnection when servicing controls. Wiring errors can cause improper and dangerous operation. Verify proper operation after servicing.

Wiring Harness

The wiring harness is an integral part of this furnace. Wires are color coded for identification purposes. Refer to the wiring diagram for wire routings. If any of the original wire as supplied with the furnace must be replaced, it must be replaced with wiring material having a temperature rating of at least 105° C. Any replacement wiring must be a copper conductor.

115 Volt Line Connections

Before proceeding with electrical connections, ensure that the supply voltage, frequency, and phase correspond to that specified on the unit rating plate. Power supply to the furnace must be NEC Class 1, and must comply with all applicable codes. The furnace must be electrically grounded in accordance with local codes or,

in their absence, with the latest edition of The National Electric Code, ANSI NFPA 70 and/or The Canadian Electric Code CSA C22.1.

Use a separate fused branch electrical circuit containing properly sized wire, and fuse or circuit breaker. The fuse or circuit breaker must be sized in accordance with the maximum overcurrent protection specified on the unit rating plate. An electrical disconnect must be provided at the furnace location.

Connect hot, neutral, and ground wires as shown in the wiring diagram located on the unit's blower door. For direct vent applications, the cabinet opening to the junction box must be sealed air tight using either an UL approved bushing such as Heyco Liquid Tight or by applying non-reactive UL approved sealant to bushing.

Line polarity must be observed when making field connections. Line voltage connections can be made through either the right or left side panel. The furnace is shipped configured for a left side (right side for counterflows) electrical connection with the junction box located inside the burner compartment. To make electrical connections through the opposite side of the furnace, the junction box must be relocated to the other side of the burner compartment prior to making electrical connections. To relocate the junction box, follow the steps shown below.

NOTE: Wire routing must not to interfere with circulator blower operation, filter removal, or routine maintenance.

Junction Box Relocation

WARNING

Edges of sheet metal holes may be sharp. Use gloves as a precaution when removing hole plugs.

WARNING

To prevent personal injury or death due to electric shock, disconnect electrical power before installing or servicing this unit.

Line voltage connections can be made through either the right or left side panel. The furnace is shipped configured for a left side electrical connection. To make electrical connections through the opposite side of the furnace, the junction box must be relocated to the right side prior to making electrical connections. To relocate the junction box, perform the following steps.

1. Remove the burner compartment door.
2. Remove and save the two screws securing the junction box to the side panel.
3. Relocate junction box and associated plugs and grommets to opposite side panel. Secure with screws removed in step 2.

To ensure proper unit grounding, the ground wire should run from the furnace ground screw located inside the furnace junction box all the way back to the electrical panel. **NOTE:** Do not use gas piping as an electrical ground. To confirm proper unit grounding, turn off the electrical power and perform the following check.

1. Measure resistance between the neutral (white) connection and one of the burners.
2. Resistance should measure 10 ohms or less.

This furnace is equipped with a blower door interlock switch which interrupts unit voltage when the blower door is opened for servicing. Do not defeat this switch.

EXTREMELY IMPORTANT: This system does not contain an O wire input (reversing valve signal). If a heat pump is installed, the thermostat should be setup for single stage heat/single stage cool installs (W= Heat Call and Y = Cool Call). Setting thermostat for heat pump control will result in incorrect performance.

Quick Start Guide

1) Connect all necessary thermostat wires to the thermostat connector on the furnace control (only available connections on the furnace are R & C for power, Y for Cooling Calls, W for Heating Calls, G for Fan Calls, Dehum for Dehumidification Calls. Furnace will control staging of indoor unit and outdoor unit automatically based on these inputs).
2) Make sure thermostat is set to single stage heat / single stage cool mode. When a cool call is given, 24VAC should be applied to the Y terminal (G will have 24VAC as well if a G wire is installed). When a heat call is given 24VAC should be applied to the W terminal (G may have 24VAC as well if a G wire is installed). Even if a heat pump is installed, do not setup the thermostat in heat pump mode. Single stage heat / single stage cool mode is all that is required for all applications. See rest of manual for any exceptions. Do not setup thermostat in multi stage mode either, it is not necessary.
3) For communicating 2 stage AC/HP or inverter AC/HP outdoor units, connect the 1&2 wires between the indoor and outdoor unit. It is recommended for 2 stage applications that a separate transformer be installed in the outdoor unit to provide 24VAC to the outdoor control. R&C can be used between the indoor and outdoor in 2 stage AC application but only if there isn't already a transformer installed in the outdoor unit.
4) Turn on power to Indoor and Outdoor units
5) Charging outdoor unit: Provide a cooling call (Y or Y+G) – this initial cooling call after the power is turned on will run the outdoor unit at full capacity until the call is removed. Use this mode for charging. If system is running low stage cooling just cycle power and provide a cool call again to ensure full capacity cooling.
6) System Testing: Download the CoolCloudHVAC phone application (see pages 31 and 32)and use it to test all operations of both indoor and outdoor units. Note: non-communicating outdoor units not connected to an optional Equipment Relay Board (see appropriate section of manual for details) will not be controllable by the CoolCloudHVAC phone application.

7) Confirm thermostat heat (W or W+G) and cool (Y or Y+G) function properly and the system is turning on in the correct mode. The internal algorithms will constantly be adjusting the staging times / cooling capacities based on load changes to the space.

   NOTE: If a heat pump is installed it will be treated as a priority heat for a W call. To test gas heat only, without waitng for the system to stage between the heat pump and furnace, disconnect communications between the indoor and outdoor unit before running the heating test.

Control System - General Information

The furnace contains internal logic to control equipment staging. An adjustable target runtime is available (range from 1 to 240 minutes) and set through the appropriate system menu. The system will constantly be adjusting staging in an effort to satify the thermostat call for cooling (Y only) or heating (W Only) as close to the set target runtime as possible. See information below for setting options.

Comfort Setting Menu (CFS): There are 6 options available in the Comfort Setting Menu which impacts both the System Target Runtime and Dual Fuel Operation. Dual Fuel operation adjustments only apply if a communicating heat pump is installed or a non-communicating heat pump is installed with an equipment relay board. Comfort Setting Options 1 – 5 have set values for the System Target Runtime and option 6 enables additional menus to customize all comfort settings. See list below for the System Target Runtimes associated with the first 5 Comfort Settings. These first 5 options are setup to help satisfy the thermostat slower or faster based on the selection where option 1, with a 10 minute Target Runtime, is attempting to satisfy much faster than option 5, with a 30 minute Target Runtime.

System Target Runtime:
Comfort Setting Option 1) 10 Minute System Target Runtime
Comfort Setting Option 2) 15 Minute System Target Runtime
Comfort Setting Option 3) 20 Minute System Target Runtime
Comfort Setting Option 4) 25 Minute System Target Runtime
Comfort Setting Option 5) 30 Minute System Target Runtime

Dual Fuel Adjustment: This system will automatically determine if the heat pump is capable of satisfying the thermostat in the selected System Target Runtime. If the heat pump is unable to satisfy in the selected time, dual fuel settings will determine how many attempts should be given to the heat pump before temporarily locking it out and using the furnace. These dual fuel settings also determine at what time the system should remove the temporary heat pump lockout and run the heat pump again.

There are four adjustable items associated with Dual Fuel control. In the same way as the System Target Time, each of these items have defaulted values for Comfort Settings 1 – 5. Only when Comfort Setting 6 is selected will each item be available for full adjustment.

1) **Stage Up Percent (7 segment menu SUP): This is a value that determines how far past the target runtime the system should continue running the heat pump before transitioning to the furnace. For example, assume this menu was set to 20% with a target runtime of 20 minutes. If the thermostat did not remove the heating call after 20 minutes, the system would allow for an additional 20% heat pump run (20% of the 20 minute target is an additional 4 minutes). In this case, the system would transition to gas heat after 24 minutes if the thermostat call was still present. Each time this occurs, the system records this as a strike against the heat pump (the strike is important when looking at the Over Target Threshold)**
2) **Over Target Threshold (7 segment menu Ott): If the heat pump has consecutively transitioned to gas heat for the selected Over Target Threshold amount of times, meaning for this many consecutive cycles it has been unable to satisfy the target time by itself, then the heat pump will be temporarily locked out and the furnace will become the primary heat source.**
3) **3) Stage Down Percent (7 segment menu SdP): This only applies when the heat pump is in a temporary lockout condition. In this case, the system will be trying to determine when the best time is to remove the lockout and run the heat pump again. To determine the best time to remove the heat pump lockout the system looks at how easily the furnace is able to satisfy the thermostat using Low Stage Gas Heat Only. Assume this setting is 15% and the target time is 20 minutes. If Low Stage Gas Heat can satisfy the thermostat in less than 17 minutes (20 minutes - 15% = 17 minutes) then the algorithm records a strike against the gas furnace. (this strike is important when looking at the Under Target Threshold).**
4) **4) Under Target Threshold (7 segment menu Utt): If the furnace is able to satisfy the thermostat using Low Stage Gas Heat Only for the selected number of consecutive cycles the heat pump lockout will be temporarily removed. The heat pump will then be used during the next cycle. If the heat pump can satisfy the thermostat in less than the System Target Runtime the temporary heat pump hold will be completely removed and the heat pump will become the primary heat source again. if it fails to do so, the strike count against the furnace will be reset and the furnace will remain the temporary primary heat source until the Under Target Threshold is reached again.**

The system will automatically make adjustments in an attempt to satisfy the thermostat as close to this target runtime as possible. After a power cycle or mode change (cooling to heating or heating to cooling) the system will run full capacity for the selected mode during the first thermostat call. Based on the selected target runtime and how long the initial cycle takes to satisfy the thermostat, the control algorithm will adjust the system stage times for a 2 stage unit or the capacity demand

percentage for an inverter / modulating unit for the next cycle. Note: actual runtimes may change depending on variations of load throughout the day.

The following table shows the default values for all Comfort Setting Options (1 – 5)

Comfort Setting Option	Target Time (Minutes)	Stage Up Percentage (%)	Stage Down Percentage (%)	Over Target Threshhold (Strike Count)	Under Target Threshhold (Strike Count)
1	10	20	20	2	10
2	15	20	20	4	8
3	20	20	20	6	6
4	25	20	20	8	4
5	30	20	20	10	2

The following table shows the ranges for each of item when the adjustable Comfort Setting Option 6 is selected. The table shows the minimum value, the maximum value and the defaulted value. All items can be adjusted up or down by increments of 1 which provides full flexibility for all items. Note: it is critical that these numbers be set properly. If Comfort Setting option 3 is desired but a target time of 60 is preferred, select Comfort Setting Option 6 to enable all the adjustable menus, set the Target Time to 60 and make sure the other menus are set to match that of Comfort Setting Option 3.

Menu	Minimum Value	Maximum Value	Default Value
Target Time (t9t)	1 minute	240 minutes	60 minutes
Stage Up Percent (SUP)	0%	100%	20%
Stage Down Percent (SdP)	0%	100%	20%
Over Target Threshold (Ott)	1 strike	254 strikes	20 strikes
Under Target Threshold (Utt)	1 strike	254 strikes	20 strikes

Circulator Blower Speed

The Airflow quantity is displayed as a number on the three 7 segment displays, rounded to the nearest 100 CFM. The display alternates airflow amount and the system operating status. Each furnace has a "Maximum CFM" it is capable of providing. All fan operations (Constant CFM, Cooling Airflow Profiles, Low and High Stage gas heat airflow, outdoor Air Conditioner / Heat Pump Airflow, etc.) are based off of multipliers which are percentages of this maximum CFM. Max CFM is as follows:

3 Ton Models 1400 CFM
4 Ton Models 1760 CFM
5 Ton Models 2200 CFM

Setup Furnace Airflow: adjust the Gas Heating Airflow menu (gAF) setting to the desired percentage of maximum airflow. In most cases the default gas heat airflow will provide a temperature rise near the middle of the acceptable range. High Stage CFM can be calculated by the following equation: CFM = Max CFM * Selected Heating Airfow Percentage.

For Communicating Outdoor Units: Main airflow adjustment is not required. The Outdoor unit will determine the appropriate amount of indoor airflow to request. Airflow Trims can be made if desired.
For Non-Communicating outdoor units, determine the proper airflow (based off tonnage of) the outdoor unit. Most cooling systems are designed to work with airflow between 350 and 450 CFM per ton. 400 CFM/TON is the industry standard. Once desired airflow has been determined, see Tonnage / Airflow table to identify the Tonnage Selection that is closest to the desired airflow. This table is based on 400 CFM per ton where Airflow = (400 CFM) x (Selected Tonnage).

Example: if 1520 CFM is the desired airflow the Tonnage Selection that matches this is 3.8

Enter the Tonnage (ton) menu either by using the on board push buttons or phone application and select the Tonnage Selection you identified. Note: Trim is also available if additional adjustment is required.

Tonnage Selection	Airflow	Tonnage Selection	Airflow	Tonnage Selection	Airflow	Tonnage Selection	Airflow
1	400	2.3	920	3.6	1440	4.9	1960
1.1	440	2.4	960	3.7	1480	5	2000
1.2	480	2.5	1000	3.8	1520	5.1	2040
1.3	520	2.6	1040	3.9	1560	5.2	2080
1.4	560	2.7	1080	4	1600	5.3	2120
1.5	600	2.8	1120	4.1	1640	5.4	2160
1.6	640	2.9	1160	4.2	1680	5.5	2200
1.7	680	3	1200	4.3	1720	5.6	2240
1.8	720	3.1	1240	4.4	1760	5.7	2280
1.9	760	3.2	1280	4.5	1800	5.8	2320
2	800	3.3	1320	4.6	1840	5.9	2360
2.1	840	3.4	1360	4.7	1880	6	2400
2.2	880	3.5	1400	4.8	1920		

Cooling Airflow Ramping Profiles

The multi-circulator blower also offers several custom ON/OFF ramping profiles. These profiles may be used to enhance cooling performance and increase comfort level. The ramping profiles are selected using the Cooling Airflow Profile menu (if push buttons are used, use the CAP menu to select the desired profile). Refer to the bullet points below for a description of each ramping profile.

- **Profile A(1)** provides only an OFF delay of one (1) minute at 100% of the cooling demand

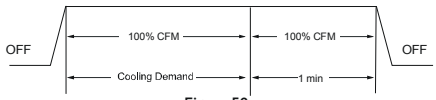

Figure 50

INSTALLATION CONSIDERATIONS

Heating CFM

MODEL & TEMP RISE RANGE (MID RISE)	*CVM970603BNB* 35-65 (50)		*CVM970803BNB* 35-65 (50)		*CVM970804CNB* 35-65 (50)		*CVM971005CNB* 35-65 (50)	
	CFM	RISE	CFM	RISE	CFM	RISE	CFM	RISE
RECOMMENDED CFM FOR 100% FIRING RATE & EXPECTED TEMPERATURE RISE	1080	50	1400	51	1430	50	1800	50
LOWEST RECOMMENDED CFM FOR 100% FIRING RATE & EXPECTED TEMPERATURE RISE	830	65	1100	65	1100	65	1380	65
MAXIMUM CFM FOR100% FIRING RATE & EXPECTED TEMPERATURE RISE	1400	38	1400	51	1760	41	2200	41

MODEL & TEMP RISE RANGE (MID RISE)	*MVM970603BNB* 25-55 (40)		*MVM970803BNB* 30-60 (45)		*MVM970804CNB* 25-55 (40)		*MVM971005CNB* 35-65 (50)		*MVM971205DNB* 35-65 (50)	
	CFM	RISE	CFM	RISE	CFM	RISE	CFM	RISE	CFM	RISE
RECOMMENDED CFM FOR 100% FIRING RATE & EXPECTED TEMPERATURE RISE	1370	40	1400	51	1760	41	1780	50	1950	55
LOWEST RECOMMENDED CFM FOR 100% FIRING RATE & EXPECTED TEMPERATURE RISE	990	55	1200	60	1320	55	1380	65	1670	65
MAXIMUM CFM FOR 100% FIRING RATE & EXPECTED TEMPERATURE RISE	1400	39	1400	51	1760	41	2200	41	2200	49

- **Profile B(2)** ramps up to full cooling demand airflow by first stepping up to 50% of the full demand for 30 seconds. The motor then ramps to 100% of the required airflow. A one (1) minute OFF delay at 100% of the cooling airflow is provided.

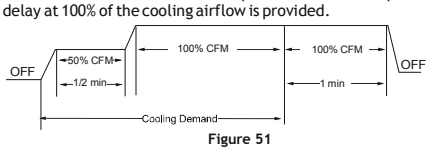

Figure 51

- **Profile C(3)** ramps up to 85% of the full cooling demand airflow and operates there for approximately 7 1/2 minutes. The motor then steps up to the full demand airflow. Profile C also has a one (1) minute 100% OFF delay.

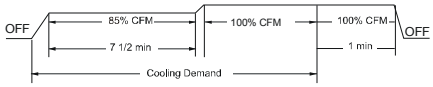

Figure 52

- **Profile D(4 or 5)** ramps up to 50% of the demand for 1/2 minute, then ramps to 85% of the full cooling demand airflow and operates there for approximately 7 1/2 minutes. The motor then steps up to the full demand airflow. Profile D has a 1/2 minute at 50% airflow OFF delay.

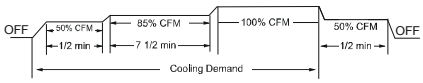

Figure 53

In general lower heating speeds will: reduce electrical consumption, lower operating sound levels of the blower, and increase the outlet air temperature delivered to the home if heatmode is running. If cooling mode is running the same airflow adjustment will decrease the outlet air temperature delivered to the home. The speeds available allow the blower performance to be optimized for the particular homeowner's needs.

Low Voltage Wiring - General Information

The Furnace functions with any thermostat that can be configured to provide 24VAC on Y for cooling calls and 24VAC on W for Heating calls. Based on these simple inputs, internal algorithms will decide how to control two stages of furnace heat in addition to any single or multi stage outdoor heating / cooling operation (the algorithms will handle dual fuel multi-stage systems as well). The thermostat must be setup to provide only a Y call when cooling is required and only a W call when heating is required. This is generally accomplished by selecting single stage heat / single stage cool mode during setup (if setup is required). Do not set thermostat to heat pump operation as system will not operate properly.

Note: The only exception is if a single stage non-communicating Heat Pump is connected to the furnace. Refer to Non-Communicating Single Stage Heat Pump diagram for details.

Thermostat connections to the control board are R, C, G, W, Y & Dehum. Provided the thermostat does not require a common wire as few as two thermostat wires may be used for heat only (R and W) or cool only (R and Y) systems. A minimum three thermostat wires may be used for heating and cooling systems (R, W and Y). Refer to thermostat wiring diagrams below for your system configuration.

Low voltage connections can be made through either the right or left side panel of the furnace. Thermostat wiring entrance holes are located in the blower compartment.

INSTALLATION CONSIDERATIONS

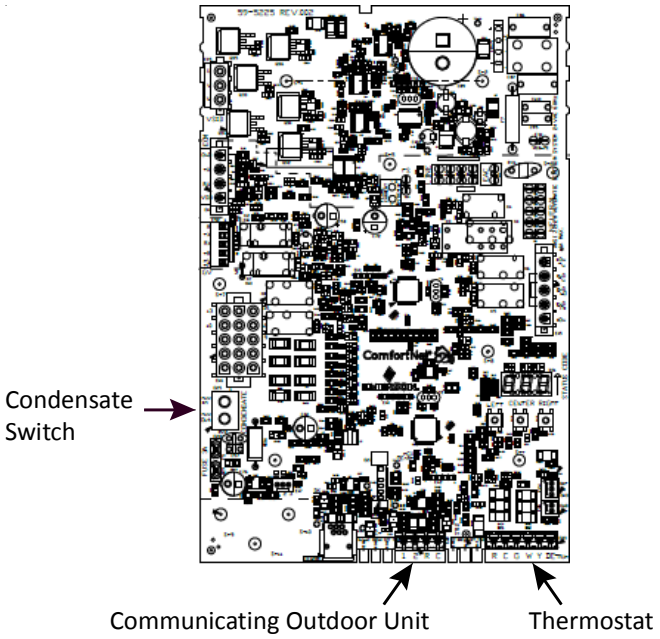

Main Control Board

For gas heat only operations (no outdoor unit installed) the thermostat must be setup to provide a single stage W call when heating is required. See Gas Heat Only wiring diagram for wiring instructions.

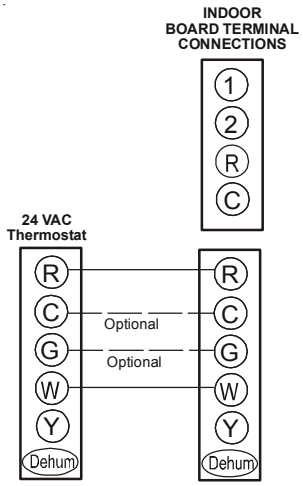

Gas Heat Only

Low Voltage Wiring - Communicating Outdoor Unit

Internal logic will control staging of all multi stage equipment (2 stage AC/HP units and Inverter AC/HP units). The thermostat is only required to provide a single stage heat / cool call and fan or dehumidification call during operation.

Two wires are required between the indoor unit and outdoor unit on the 1 and 2 terminals. It is recommended to install a separate transformer with all 2 stage outdoor units to reduce the power draw on the indoor transformer.

4 wires (R,C for power and 1, 2 for communications) can be used for AC applications. See wiring images for details.

Do not connect R & C between the indoor unit and the outdoor unit if there is already a transformer installed in the outdoor unit providing 24VAC to the outdoor control. In this case, just use 1 and 2 terminals for communcations.

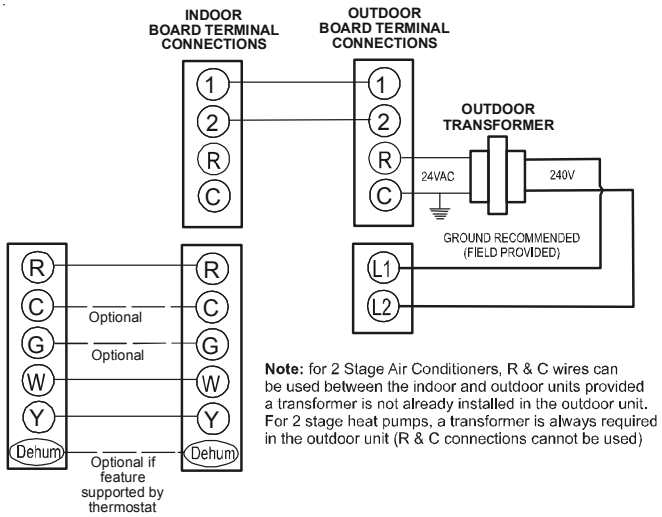

INSTALLATION CONSIDERATIONS

Communicating Two Stage

Air Conditioner or Heat Pump

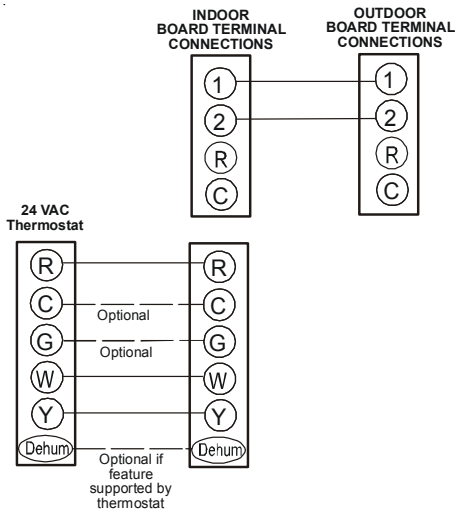

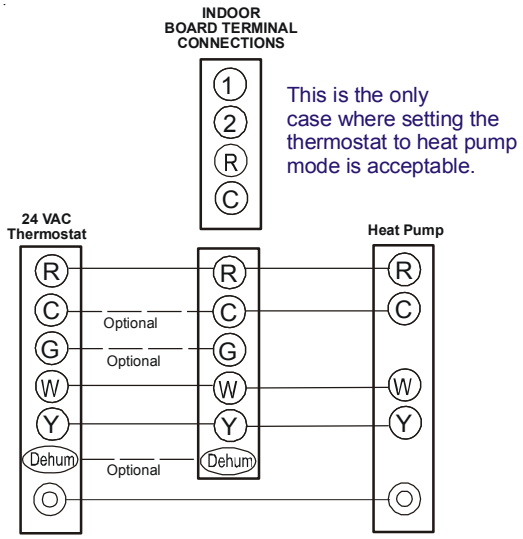

Non-Communicating Single Stage Heat Pump

Communicating Inverter Air Conditioner or Heat Pump

Low Voltage Wiring - Non-Communicating Outdoor Unit

When using the furnace with a single stage non-communicating air conditioner or heat pump use the wiring methods shown. When using a single stage air conditioner, the thermostat must be setup for single stage heating and single stage cooling mode. When using a single stage heat pump, the thermostat must be setup for dual fuel operation where the reversing valve is energized in cooling mode (see Non-Communicating Single Stage Heat Pump wiring diagram). In both cases airflow must be selected using the tonnage menu where Airflow = (400 CFM) x (Selected Tonnage). Tonnage values range from 1 to 6 in 0.1 increments.

NOTE: Airflow will not go above the system Max CFM. If the tonnage value selected generates an airflow value above the Max CFM, the system will cap this value and not provide any more airflow than the Max CFM.

NOTE: When installing a non-communicating outdoor unit without using the Equipment Relay Board, airflow adjustments must be made using the control push buttons. The initial version of the phone application will not be capable of making this setting change with this equipment configuration

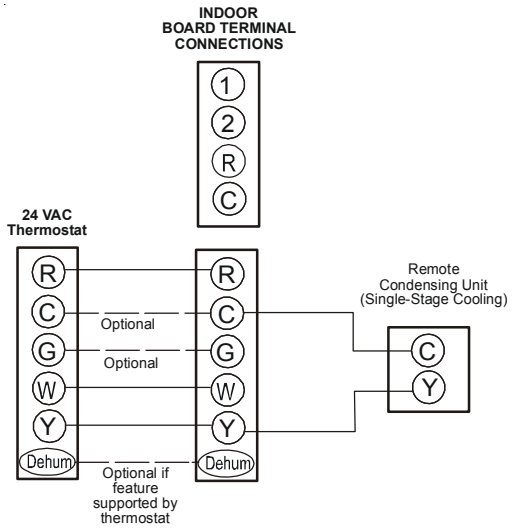

Non-Communicating Single Stage A/C

INSTALLATION CONSIDERATIONS

Dehumidification

The control board is equipped with a 24 volt dehum input in the thermostat wiring connector to be used with a thermostat or dehumidistat. Using an accessory relay board is also an option. Dehumidification mode allows the air handler's circulator blower to operate at a slightly lower speed (85% of calculated speed) during a combined thermostat call for cooling and thermostat call for dehumidification or dehumidistat call for dehumidification. This lower blower speed enhances dehumidification of the conditioned air as it passes through the AC coil. If using the dehum input with a thermostat, configure the thermostat to energize this terminal when dehumidification is desired. If using an external dehumidistat, connect it between the R and Dehum terminals. The dehumidistat must operate on 24 VAC and utilize a switch which *closes on humidity rise.* Refer to the low voltage wiring diagrams for additional wiring details. If using an accessory relay board, configure accessories through the CoolCloudHVAC phone application or push button menus.

Dehumidistat (close on humidity rise)

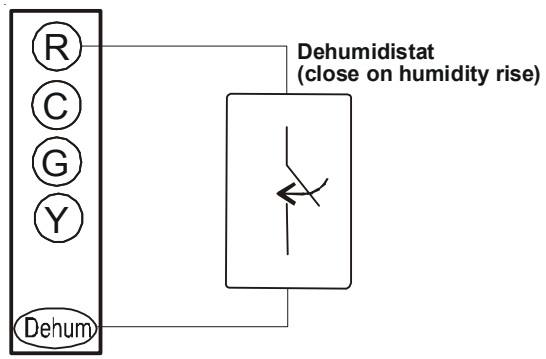

Figure 34

Fossil Fuel Applications

This furnace can be used in conjunction with a heat pump in a fossil fuel application. A fossil fuel application refers to a combined gas furnace and heat pump installation which uses an outdoor temperature sensor to determine when to run the heat pump or gas furnace.

For non-communicating single stage heat pump installations a fossil fuel kit can be used. Follow the wiring guidelines in the fossil fuel kit installation instructions. All furnace connections must be made to the furnace integrated control module and the "FURNACE" terminal strip on the fossil fuel control board.

For Fossil Fuel systems the heat pump is given priority when a compressor balance point lockout condition is not present. Transitions from primary heat pump heating to backup gas heating will result in full capacity operation during the first thermostat call. The furnace PCB algorithms will then continuously adjust the stage times or the percent capacity after the initial call in an attempt to satisfy the thermostat at the target runtime.

Automatic Fossil Fuel Adjustment: If both compressor balance point and backup heat balance point lockouts are not present, the furnace algorithms will determine if the heat pump is capable of satisfying the thermostat in the selected target runtime. If the heat pump is not capable of this it will be locked out until the furnace can satisfy the thermostat, under the target runtime, while running completely in low stage. At that point, an attempt will be given to the heat pump and a decision made to keep using gas heat or to transition back to the heat pump.

INSTALLATION CONSIDERATIONS

115 Volt Line Connection of Electronic Air Cleaner

WARNING

HIGH VOLTAGE !

To avoid personal injury or death due to electrical shock, disconnect electrical power before servicing or changing any electrical wiring.

The accessory load specifications are as follows:

EAC	1.0 Amp maximum at 120 VAC

The furnace integrated control module is equipped with a line voltage accessory terminal for controlling power to an optional field supplied electronic air cleaner or any device required to operate inparallel with a circulating fan demand.

To connect an electronic air cleaner using the line voltage EAC terminal:

- Turn OFF power to the furnace before installing any accessories.
- Follow the air cleaner manufacturers' instructions for locating, mounting, grounding, and controlling accessories. Utilize ¼"quick connect terminals to make accessory wiring connections to the furnace integrated control module.
- Connect the hot terminal utilized for accessory operation to the EAC terminal and the neutral side of power to NEUTRAL bus on the integrated furnace control or the neutral connection in the furnace junction box.
- All field wiring must conform to applicable codes.
- Connections should be made as shown.
- If it is necessary for the installer to supply additional line voltage wiring to the inside of the furnace, the wiring must conform to all local codes, and have a minimum temperature rating of 105°C.
- All line voltage wire splices must be made inside the furnace junction box.

Auxiliary Alarm Switch:

The control is equipped with a 24VAC Aux Alarm to be used for a condensate switch install (designated by "Condensate" on the control). These contacts could also be used with compatible CO_2 sensors or Fire Alarms. By default, an AUX switch is normally closed and opens when the water level in the evaporator coil base pan reaches an undesirable level. The control will respond by turning off the outdoor condensing unit and display EEd. If the AUX switch is detected closed for 30 seconds, normal operation resumes and error messages are no longer displayed.

Cool Cloud HVAC Phone Applicaton

CoolCloudHVAC Phone Application - General Information

Examples of Cool Cloud HVAC Phone Application Screens
NOTE: Actual screen may look different based on the device being used.

This furnace is Bluetooth ready and functions with a custom phone application designed to improve the setup / diagnostic experience of the installing contractor. Users can see specific model information, review active diagnostic error codes, observe system status during operation, make system menu adjustments such as the target runtime, add site visit notes and run system testing of all operational modes (heat / cool / fan) directly from the phone. The phone application is also capable of directly updating the furnace software anytime updates are available (the application will automatically notify the user if updates are available). Software update time could take approximately 15 minutes to complete. The phone must remain within Bluetooth range for only the download step of an update. The user will be notified once the download is completed and installation begins. At this time the phone can be removed from the Bluetooth range if necessary (Note: if the phone is out of range, the user will not know when the installation has completed or what the existing status of the installation is).
Download the CoolCloud Phone Application and create an account to get started. A Wi-Fi/Cellular connection will be required for account setup.

Connecting Phone Application to Furnace

When in close proximity to the furnace, the phone application will detect the Bluetooth Network being broadcasted by the system. Once the Bluetooth network is selected by the user, due to security reasons, the user will be prompted for a 3 digit access code before system information can be displayed. The 3 digit code will be displayed on the three seven segment displays of the furnace control board. A sightglass is located close to the control board that can be used to see these digits. The user must enter the access code into the phone application when prompted to do so in order to gain access to system information. 3 failed entry attempts will result in a new code being displayed on the control. If all 3 digits are not visible from the sight glass, the user has two options to connect.

Option 1) Perform thermostat task as instructed by the phone application to gain access. The following steps will explain what this task involves.

Step 1, ensure the thermostat is in an idol state (no cool, heat or fan calls). To do this, set the thermostat fan mode to Auto (not ON) and then remove any active heat / cool calls. This task needs to be completed within 5 minutes of the process beginning.

Step 2, provide any 24VAC call to the control from the thermostat (cooling, heating or fan will work). This task must occur within 8 minutes after the Step 1 is complete.

Step 3, remove the call that was provided during Step 2. This task must be completed within 1 minute after the call is provided during Step 2.

Cool Cloud HVAC Phone Applicaton

If the phone remains within Bluetooth range during the three steps, the user will be notified when each step has been completed and informed about what to do next. If the user is not within Bluetooth range during this process the phone application will still provide instruction about what tasks to complete. After all 3 steps have successfully been completed, the user will have access to system information once in range.

Option 2) Remove the furnace door, ensure the control has power and then read the 3 digits. The code will temporarily remain active after a power cycle so the door can put back on before making the connection if desirable. Note: power will be cycled to the control board with this option. If it is not desirable to cycle power to the unit for diagnostic purposes Option 1 may be a better method to connect.

At power-up, the furnace control will display the unit address (a two digit number) on the 2nd and 3rd characters of the three seven segment displays. After the furnace control has completed its' internal start-up routine, the furnace control will display the Status Menu. The control board will display "Id L" while in idle (stand-by) mode waiting for a call from the thermostat. The furnace control is now ready to receive inputs from the room thermostat.
The furnace control board will detect any compatible communicating outdoor unit connected to it. Items that appear in the main menu will vary accordingly. Example, you will not see heat pump specific menus unless a compatible heat pump is detected by the furnace control.

Push Button Switches

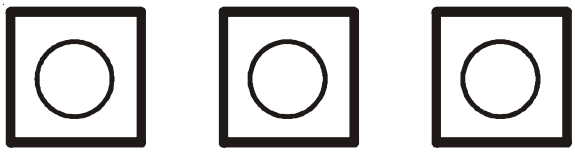

Three push-button switches on the control board may be used to navigate menus and select options. The three switches are labeled Left, Center and Right. The center switch is used to enter into the option menu and make the selection, the left and right switches are used to browse the main menu and option menus. When the center switch is pressed in the main menu, the furnace control will go to the option menu and display the default or previously-selected option. Pressing the left or right button will display the next available option. When the next adjustable or selectable option is displayed, the furnace control will flash the option with ½ second ON and ½ second OFF indicating the option has not yet been selected.
To select an option; press and release the center button to stop the current option from flashing. When the option has stopped flashing, press the center button again to select that option.

While navigating through options; if no switches are pressed during a 30 second time period, the display will time-out and return to the Status Menu. Simultaneously pressing & releasing any two switches will also return the furnace control back to the Status Menu. If the previously displayed option was not selected and a timeout occurs, the displayed option will not be stored in control memory as a selected option.

The Status Menu includes the following items;

- The operation mode
- Blower CFM (if blower is running)
- Humidification/Dehumidification mode (if active)
- Ventilator operation (if active)
- any active fault codes

Menu items will appear in rotation as follows:

- Each item is ON for 2 seconds
- OFF for 1 second
- Then to the next item

Example of Menu Navigation & Option Change

This is an example for how to use the push buttons to make a change to the constant fan speed.

1) When looking at the Furnace Control, the three 7 Segment displays (located just above the push buttons) will be displaying system status. System status includes the current modes of operation, airflow and any active error codes.

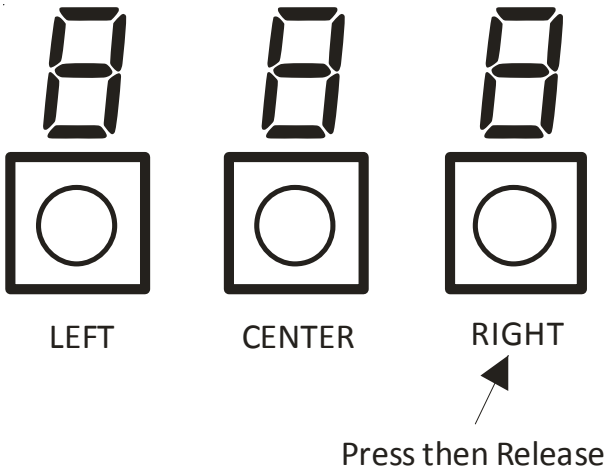

2) Press and release the Right Button (this will cycle through the menus in one direction. Pressing the Left Button would cycle through the menus in the opposite direction. For this example, the right button will be used).
3) The screen will now display Menu L6F (Last 6 Faults). Continue pressing and releasing the Right Button until you see FSd which is the menu for Constant Fan Multiplier. Before reaching the FSd menu you will scroll through Menus L6F, Lm, Cr, Sr and rFd.

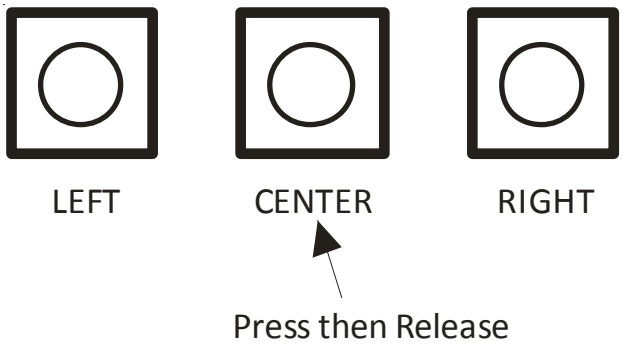

4) Press and release the Center Button. The center button is used to enter menus and make selections within menus.
5) What will be displayed is the currently selected fan only percentage. For this example the assumption is that this currently selected fan only percentage is 25% and changing this to 45% is the objective.
6) Press and Release the Right button. The screen will change to 35 and start flashing. The flashing indicates the displayed option has not been selected yet.
7) Press and Release the Right button again. The 7 segment displays will continue flashing but will now display 45.

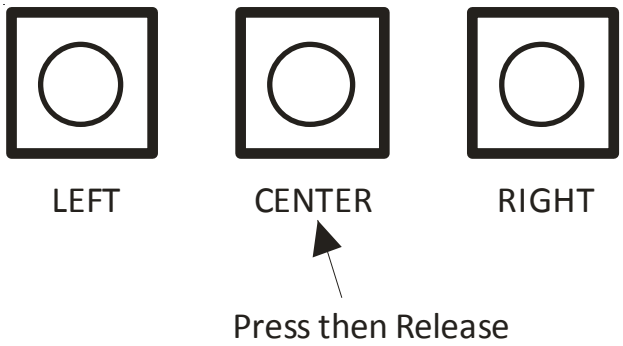

8) **Press and Release the Center Button again. The 45 being displayed will stop flashing. To then complete the selection process and make 45 the official fan only setting Press and Release the Center Button for the last time. This final step will jump the user back to the main menu list and FSd will be displayed again.**
9) **The constant fan multiplier has now been changed from 25 to 45**

Airflow Display

When the blower is running the CFM will be displayed in Status Menu. The first 7 segment character will display "A". The second & third characters will display the actual CFM divided by 100. The actual CFM will display rounded up or down to the nearest 100 CFM as follows;

- **550 to 649 CFM display as "**A06**"**
- **1150 to 1249 CFM display as "**A12**"**

Alarm Display

If an active alarm is present, the alarm code shall be reported in Status Menu starting with "E**" and following with the appropriate two digit alarm code.**

Clearing Faults

While in the Last 6 Faults option menu, push & hold the center button for 5 seconds. This will clear all non-active alarm(s) in the Last 6 Faults menu. The display will flash three times to confirm faults have been cleared.

Learn Menu

Using this option resets the communicating network which will cause the furnace to discover what devices are present on ClimateTalk™ network. This menu will not appear when the furnace control is connected to a Non-Comm OD unit.

Code Release Number Menu

This is a reference only menu to display the firmware release revision numbers for each micro-controller.

Constant Fan Speed Menu

This menu allows for adjustment of the multiplier for constant fan operation in 10% increments. Each furnace has a "Maximum CFM" determined by motor HP. All fan operations are based off of multipliers which are percentages of this number. Max CFM is shown below. The default constant fan multiplier is 25%.

Model	Max CFM
3 Ton Models	1400
4 Ton Models	1760
5 Ton Models	2200

NOTE: *MVM970803 max CFM is 1650

SYSTEM OPERATION

Gas Heat Airflow Multiplier Menu

The menu is used to change the gas heat airflow multiplier for gas heat operation. In most cases the default gas heat airflow will provide a temperature rise near the middle of the acceptable range. The multiplier will be expressed by the 2nd & 3rd characters of the display as a percentage of max CFM.

Gas Heat Fan Off Delay Menu

The default setting is 90 seconds. The available adjustment range is from 30 to 180 seconds in 30 second increments.

Gas Heat Fan On Delay Menu

The default setting is 30 seconds. The available adjustment range is from 5 to 30 seconds in 5 second increments.

Gas Heat Trim Factor Option Menu

Gas Heat airflow may be trimmed from -10% to +10% in 2% increments.

Gas Heat Stage Multiplier Menu (CFM)

This menu allows adjustment of the low fire CFM multiplier. The default CFM for low fire is 70% of high fire.

Gas Pressure Test Menu

This menu allows 100% firing rate be locked in to check gas valve pressure.

CAUTION

TO PREVENT UNRELIABLE OPERATION OR EQUIPMENT DAMAGE, THE INLET GAS SUPPLY PRESSURE MUST BE AS SPECIFIED ON THE UNIT RATING PLATE WITH ALL OTHER HOUSEHOLD GAS FIRED APPLIANCES OPERATING.

INLET GAS SUPPLY PRESSURE		
Natural Gas	Minimum: 4.5" w.c.	Maximum: 10.0" w.c.
Propane Gas	Minimum: 11.0" w.c.	Maximum: 13.0" w.c.

Gas Supply and Piping

The furnace rating plate includes the approved furnace gas input rating and gas types. The furnace must be equipped to operate on the type of gas applied. This includes any conversion kits required for alternate fuels and/or high altitude.

Inlet gas supply pressures must be maintained within the ranges specified in the following table. The supply pressure must be constant and available with all other household gas fired appliances operating. The minimum gas supply pressure must be maintained to prevent unreliable ignition. The maximum must not be exceeded to prevent unit overfiring.

High Altitude Derate

When this furnace is installed at high altitude, the appropriate High Altitude orifice kit must be applied. This is required due to the natural reduction in the density of both the gas fuel and combustion air as altitude increases. The kit will provide the proper design certified input rate within the specified altitude range.

High altitude kits are purchased according to the installation altitude and usage of either natural or propane gas. Consult the furnace Specification Sheet for appropriate kits.

Do **not** derate the furnace by adjusting the manifold pressure to a lower pressure than specified on the furnace rating plate. The combination of the lower air density and a lower manifold pressure will prohibit the burner orifice from drawing the proper amount of air into the burner. This may cause incomplete combustion, flashback, and possible yellow tipping.

In some areas the gas supplier may artificially derate the gas in an effort to compensate for the effects of altitude. If the gas is artificially derated, the appropriate orifice size must be determined based upon the BTU/ft^3 content of the derated gas and the altitude. Refer to the National Fuel Gas Code, NFPA 54/ANSI Z223.1 or CAN/CSA B149.1-15 in Canada, and information provided by the gas supplier to determine the proper orifice size.

A different pressure switch may be required at high altitude regardless of the BTU/ft^3 content of the fuel used. Consult the furnace Specification Sheet for pressure switch.

Propane Gas Conversion

WARNING

POSSIBLE PROPERTY DAMAGE, PERSONAL INJURY OR DEATH MAY OCCUR IF THE CORRECT CONVERSION KITS ARE NOT INSTALLED. THE APPROPRIATE KITS MUST BE APPLIED TO ENSURE SAFE AND PROPER FURNACE OPERATION. ALL CONVERSIONS MUST BE PERFORMED BY A QUALIFIED INSTALLER OR SERVICE AGENCY.

This unit is configured for natural gas. The appropriate manufacturer's propane gas conversion kit, must be applied for propane gas installations. Refer to the *Propane Gas and/or High Altitude Installations* for details.

Consult the furnace Specification Sheet for a listing of appropriate kits. The indicated kits must be used to insure safe and proper furnace operation. All conversions must be performed by a qualified installer, or service agency.

Gas Valve

This unit is equipped with a 24 volt gas valve controlled during furnace operation by the integrated control module. As shipped, the valve is configured for natural gas. The valve is field convertible for use with propane gas by replacing the regulator spring with a propane gas spring from an appropriate manufacturer's propane gas conversion kit. Taps for measuring the gas supply pressure and manifold pressure are provided on the valve.

SYSTEM OPERATION

The gas valve has a manual ON/OFF control located on the valve itself. This control may be set only to the "ON" or "OFF" position. Refer to the lighting instructions label or *Startup Procedure & Adjustment* for use of this control during start up and shut down periods.

WARNING

TO AVOID POSSIBLE UNSATISFACTORY OPERATION OF EQUIPMENT DAMAGE DUE TO UNDERFIRING OR EQUIPMENT, USE THE PROPER SIZE OF NATURAL/PROPANE GAS PIPING NEEDED WHEN RUNNING PIPE FROM THE METER/TANK TO THE FURNACE.

GAS PIPING CONNECTIONS

Natural Gas Capacity of Pipe
In Cubic Feet of Gas Per Hour (CFH)

Length of Pipe in Feet	Nominal Black Pipe Size				
	½"	¾"	1"	1¼"	1 ½"
10	132	278	520	1050	1600
20	92	190	350	730	1100
30	73	152	285	590	980
40	63	130	245	500	760
50	56	115	215	440	670
60	50	105	195	400	610
70	46	96	180	370	560
80	43	90	170	350	530
90	40	84	160	320	490
100	38	79	150	305	460

(Pressure 0.5 psig or less and pressure drop of 0.3" W.C.; Based on 0.60 Specific gravity Gas)

$$\text{CFH} = \frac{\text{BTUH Furnace Input}}{\text{Heating Value of Gas (BTU/Cubic Foot)}}$$

The gas piping supplying the furnace must be properly sized based on the gas flow required, specific gravity of the gas, and length of the run. The gas line installation must comply with local codes, or in their absence, with the latest edition of the National Fuel Gas Code, NFPA 54/ANSI Z223.1 or CAN/CSA B149.1-15.

To connect the furnace to the building's gas piping, the installer must supply a ground joint union, drip leg, manual shutoff valve, and line and fittings to connect to gas valve. In some cases, the installer may also need to supply a transition piece from 1/2" pipe to a larger pipe size.

The following stipulations apply when connecting gas piping. Refer to *Gas Piping Connections* figure for typical gas line connections to the furnace.

- Gas piping must be supported external to the furnace cabinet so that the weight of the gas line does not distort the burner rack, manifold or gas valve.
- Use black iron or steel pipe and fittings for building piping. Where possible, use new pipe that is properly chamfered, reamed, and free of burrs and chips. If old pipe is used, be sure it is clean and free of rust, scale, burrs, chips, and old pipe joint compound.
- Use pipe joint compound on male threads ONLY. Always use pipe joint compound (pipe dope) that is APPROVED FOR ALL GASSES. DO NOT apply compound to the first two threads.
- Use ground joint unions.
- Install a drip leg to trap dirt and moisture before it can enter the gas valve. The drip leg must be a minimum of three inches long.
- Install a 1/8" NPT pipe plug fitting, accessible for test gage connection, immediately upstream of the gas supply connection to the furnace.
- Always use a back-up wrench when making the connection to the gas valve to keep it from turning. The orientation of the gas valve on the manifold must be maintained as shipped from the factory. Maximum torque for the gas valve connection is 375 in-lbs; excessive over-tightening may damage the gas valve.
- Install a manual shutoff valve between the gas meter and unit within six feet of the unit. If a union is installed, the union must be downstream of the manual shutoff valve, between the shutoff valve and the furnace.
- Tighten all joints securely.
- Connection method must be in compliance with all local and national codes. US: National Fuel Gas Code (NFGC) NFPA 54-2015/ANSI Z223.1-2015 and the Installation Standards, Warm Air Heating and Air Conditioning Systems ANSI/NFPA 90B

  In Canada, CANADA: National Standard of Canada, Natural Gas and Propane Installtion Code (NSCNGPIC) CAN/CSA B149.1-15
- Connect the furnace to the building piping by one of the following methods:
  - Rigid metallic pipe and fittings.
  - Semi-rigid metallic tubing and metallic fittings. Aluminum alloy tubing must not be used in exterior locations. In order to seal the grommet cabinet penetration, rigid pipe must be used to reach the outside of the cabinet. A semi-rigid connector to the gas piping may be used from there.
- Use listed gas appliance connectors in accordance with their instructions. Connectors must be fully in the same room as the furnace.
- Protect connectors and semirigid tubing against physical and thermal damage when installed. Ensure aluminum-alloy tubing and connectors are coated to protect against external corrosion when in contact with masonry, plaster, or insulation, or subjected to repeated wetting by liquids such as water (except rain water), detergents, or sewage.

The gas piping may enter the left or right side of the furnace cabinet. The installer must supply rigid pipe long enough to reach the outside of the cabinet to seal the grommet cabinet penetration. A semi-rigid connector to the gas piping can be used outside the cabinet per local codes. ½" NPT pipe and fittings are required. For models with an "L" shaped manifold, a 4 ½ long nipple is required. For models with a hook shaped manifold, a 2" long nipple is required.

SYSTEM OPERATION

A semi-rigid connector to the gas piping can be used outside the cabinet per local codes. From the elbow, the length of pipe and the fittings required will vary by the side chosen, location of union and cabinet width. The union may be placed inside or outside of the cabinet.

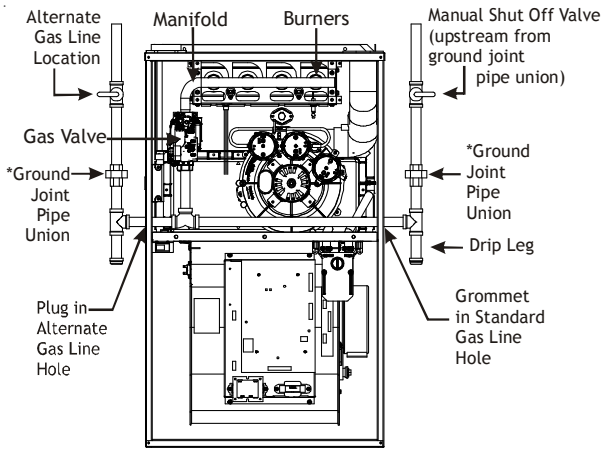

**NOTE: Union may be inside furnace cabinet where allowed by local codes.*

Figure 37

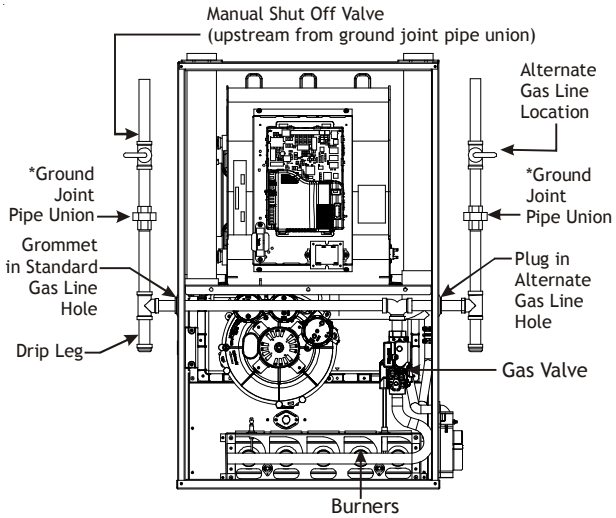

**NOTE: Union may be inside furnace cabinet where allowed by local codes.*

Figure 38

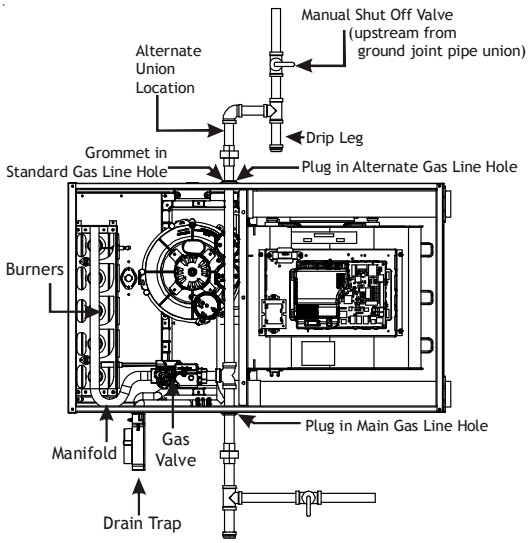

Figure 39

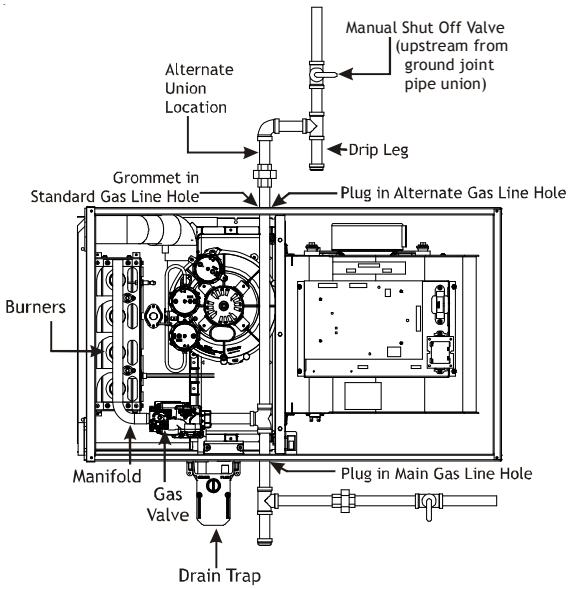

COUNTERFLOW - HORIZONTAL RIGHT
Figure 40
GAS PIPING CONNECTIONS

SYSTEM OPERATION

Gas Piping Checks

WARNING

To avoid the possibility of explosion or fire, never use a match or open flame to test for leaks.

Before placing unit in operation, leak test the unit and gas connections.

Check for leaks using an approved chloride-free soap and water solution, an electronic combustible gas detector, or other approved testing methods.

NOTE: Never exceed specified pressures for testing. Higher pressure may damage the gas valve and cause subsequent overfiring, resulting in heat exchanger failure.
Disconnect this unit and shutoff valve from the gas supply piping system before pressure testing the supply piping system with pressures in excess of ½ psig (3.48 kPa).

Isolate this unit from the gas supply piping system by closing its external manual gas shutoff valve before pressure testing supply piping system with test pressures equal to or less than ½ psig (3.48 kPA).

Propane Gas Tanks and Piping

WARNING

If the gas furnace is installed in a basement, an excavated area or confined space, it is strongly recommended to contact a propane supplier to install a gas detecting warning device in case of a gas leak.

- **Since propane gas is heavier than air, any leaking gas can settle in any low areas or confined spaces.**
- **Propane gas odorant may fade, making the gas undetectable except with a warning device.**

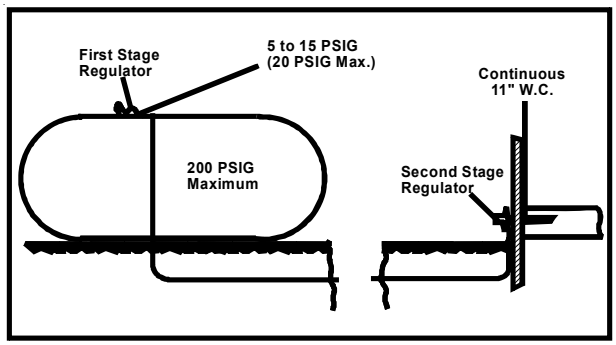

Propane Gas installation (Typ.)
Figure 41

A gas detecting warning system is the only reliable way to detect a propane gas leak. Rust can reduce the level of odorant in propane gas. Do not rely on your sense of smell. Contact a local propane gas supplier about installing a gas detecting warning system. If the presence of gas is suspected, follow the instructions listed in the *Safety Considerations* section of this manual.

All propane gas equipment must conform to the safety standards of the National Board of Fire Underwriters, NBFU Manual 58.

CANADA: National Standard of Canada, Natural Gas and Propane Installation Code (NSCNGPIC) CAN/CSA B149.1-15.

For satisfactory operation, propane gas pressure must be 10" WC at the furnace manifold with all gas appliances in operation. Maintaining proper gas pressure depends on three main factors:

1. Vaporization rate, depending on temperature of the liquid, and "wetted surface" area of the container or containers.
2. Proper pressure regulation. (Two-stage regulation is recommended for both cost and efficiency).
3. Pressure drop in lines between regulators, and between second stage regulator and the appliance. Pipe size will depend on length of pipe run and total load of all appliances.

Complete information regarding tank sizing for vaporization, recommended regulator settings, and pipe sizing is available from most regulator manufacturers and propane gas suppliers.

Since propane gas will quickly dissolve white lead and most standard commercial compounds, special pipe dope must be used. Always use a pipe thread sealant approved for all gases.

Refer to the following illustration for typical propane gas installations and piping.

Circulating Air & Filters

Duct work - Air Flow

Duct systems and register sizes must be properly designed for the CFM and external static pressure rating of the furnace. Design the ductwork in accordance with the recommended methods of "Air Conditioning Contractors of America" Manual D.

Install the duct system in accordance with Standards of the National Board of Fire Underwriters for the Installation of Air Conditioning, Warm Air Heating and Ventilating Systems. Pamphlets No. 90A and 90B.

A closed return duct system must be used, with the return duct connected to the furnace. **NOTE:** Ductwork must never be attached to the back of the furnace. For upflow installations requiring 1800 CFM or more, use either two side returns or bottom return or a combination of side /bottom. Flexible joints may be used for supply and return connections to reduce noise transmission. To prevent the blower from interfering with combustion air or draft when a central return is used, a connecting duct must be installed between the unit and the utility room wall. Never use a room, closet, or alcove as a return air chamber.

Checking Duct Static

WARNING

Never allow the products of combustion, including carbon monoxide, to enter the return duct work or circulation air supply.

Refer to your furnace rating plate for the maximum ESP (external duct static) rating.

SYSTEM OPERATION

Total external static refers to everything external to the furnace cabinet. Cooling coils, filters, ducts, grilles, registers must all be considered when reading your total external static pressure. The supply duct pressure must be read between the furnace and the cooling coil. This reading is usually taken by removing the "A" shaped block off plate from the end on the coil; drilling a test hole in it and reinstalling the block off plate. Take a duct static reading at the test hole. Tape up the test hole after your test is complete. The negative pressure must be read between the filter and the furnace blower.

Too much external static pressure will result in insufficient air that can cause excessive temperature rise. This can cause limit switch tripping and heat exchanger failure.

To determine total external duct static pressure, proceed as follows;

1. With clean filters in the furnace, use a draft gauge (inclined manometer) to measure the static pressure of the return duct at the inlet of the furnace. (Negative Pressure)
2. Measure the static pressure of the supply duct. (Positive Pressure)
3. The difference between the two numbers is .4" w.c.

Example:

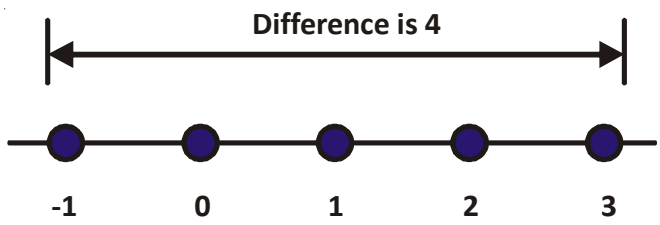

static reading from return duct = -.1" w.c.

static reading from supply duct = .3" w.c.

total external static pressure on this system = .4" w.c.

NOTE: Both readings may be taken simultaneously and read directly on the manometer if so desired. If an air conditioner coil or Electronic Air Cleaner is used in conjunction with the furnace, the readings must also include theses components, as shown in the following drawing.

4. Consult proper tables for the quantity of air.

If the total external static pressure exceeds the maximum listed on the furnace rating plate, check for closed dampers, registers, undersized and/or oversized poorly laid out duct work.

The temperature rise of the furnace must be within the temperature rise range listed on the furnace rating plate.

Bottom Return Air Opening [Upflow Models]

The bottom return air opening on upflow models utilizes a "lance and cut" method to remove sheet metal from the duct opening in the base pan. To remove, simply press out the lanced sections by hand to expose the metal strips retaining the sheet metal over the duct opening. Using tin snips, cut the metal strips and remove the sheet metal covering the duct opening. In the corners of the opening, cut the sheet metal along the scribe lines to free the duct flanges. Using the scribe line along the duct flange as a guide, unfold the duct flanges around the perimeter of the opening using a pair of seamer pliers or seamer tongs.

NOTE: Airflow area will be reduced by approximately 18% if duct flanges are left in factory position. This could cause performance issues and noise issues.

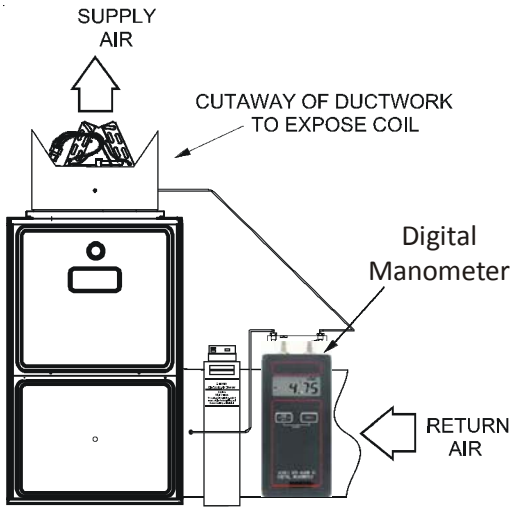

Checking Static Pressure
Figure 42

When the furnace is used in connection with a cooling unit, the furnace should be installed in parallel with or on the upstream side of the cooling unit to avoid condensation in the heating element. With a parallel flow arrangement, the dampers or other means used to control the flow of air must be adequate to prevent chilled air from entering the furnace and, if manually operated, must be equipped with means to prevent operation of either unit unless the damper is in the full heat or cool position.

WARNING

Edges of sheet metal holes may be sharp. Use gloves as a precaution when removing sheet metal from return air openings.

When the furnace is installed without a cooling coil, it is recommended that a removable access panel be provided in the outlet air duct. This opening shall be accessible when the furnace is installed and shall be of such a size that the heat exchanger can be viewed for visual light inspection or such that a sampling probe can be inserted into the airstream. The access panel must be made to prevent air leaks when the furnace is in operation.

When the furnace is heating, the temperature of the return air entering the furnace must be between 55°F and 100°F.

SYSTEM OPERATION

Filters - Read This Section Before Installing The Return Air Duct work

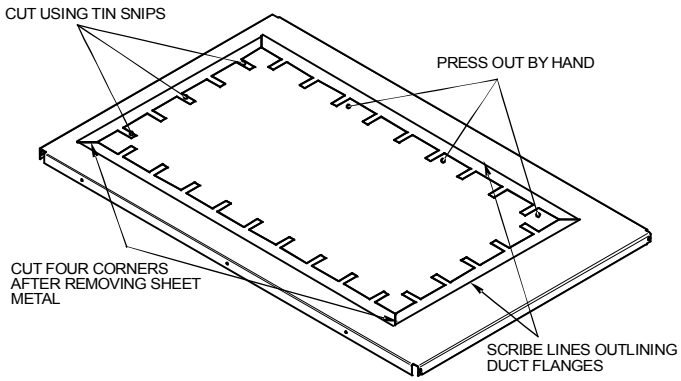

Duct Flange Cut Outs

Figure 43

Model	Minimum Recommended Filter Size^
MVC960403BN	1 - 16 X 25 Side or Bottom
MVC960603BN	1 - 16 X 25 Side or Bottom
MVC960803BN	1 - 16 X 25 Side or Bottom
MVC960804CN	1 - 16 X 25 Side or Bottom
MVC961005CN	1 - 20 X 25 Bottom / 2 - 16 X 25 Side Return
MVC961005DN	1 - 20 X 25 Bottom / 2 - 16 X 25 Side Return
MVC961205DN	1 - 20 X 25 Bottom / 2 - 16 X 25 Side Return
CVC960403BN	2 - 10 X 20 or 1 - 16 X 25 Top Return
CVC960603BN	2 - 10 X 20 or 1 - 16 X 25 Top Return
CVC960804CN	2 - 10 X 20 or 1 - 16 X 25 Top Return
CVC961005CN	2 - 14 X 20 or 1 - 20 X 25 Top Return
CVC961205DN	2 - 14 X 20 or 1 - 20 X 25 Top Return

^ Larger filters may be used, filters may also be centrally located

Filters must be used with this furnace. Discuss filter maintenance with the building owner. Filters do not ship with this furnace, but must be provided, sized and installed externally by the installer. Filters must comply with UL900 or CAN/ULCS111 standards. Damage or repairs due to the installation of the furnace without filters is not covered under the warranty.

On upflow units, guide dimples locate the side return cutout locations. Use a straight edge to scribe lines connecting the dimples. Cut out the opening on these lines. **NOTE:** An undersized opening will cause reduced airflow.

Upright Installations

Depending on the installation and/or customer preference, differing filter arrangements can be applied. Filters can be installed in the central return register or a side panel external filter rack kit (upflows). As an alternative a media air filter or electronic air cleaner can be used as the requested filter. Consider installing an air cleaner with deep-pleated media filter at the time of furnace installation. A deep-pleated filter with a MERV rating of 8 (minimum) will often provide better filtration to protect equipment and the air distribution system than a standard 1" filter and often has lower static pressure loss than a 1" filter. Also a deep-pleated filter will typically require less frequent replacement intervals. Avoid using highly restrictive 1" filters which produce static pressure loss greater than .25" W.C. In some installations the minimum filter size required will not lend itself to a filter installation on the side of the furnace. The installation of a centrally installed air cleaner cabinet or a return duct filter installation may offer more practicality.

Clean Comfort™ brand MERV 11 air cleaners have 5¼" media filters and are available in the following configurations. Consult your distributor for information on our complete line of IAQ Clean Comfort™ products.

The following figure shows possible filter locations.

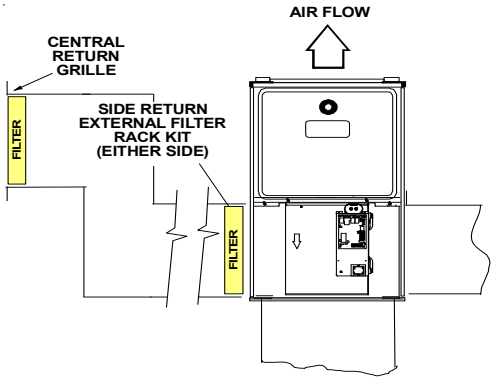

Possible Upright Upflow

Figure 44

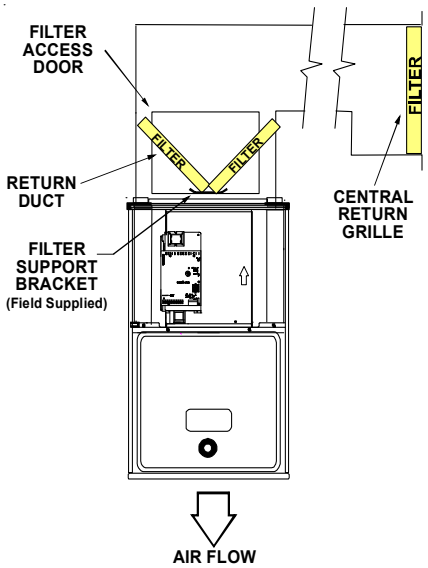

Possible Upright Counterflow Filter Locations

Figure 45

Horizontal Installations

Filters must be installed in either the central return register or in the return air duct work.

Startup Procedure & Adjustment

Furnace must have a 115 VAC power supply properly connected and grounded. Proper polarity must be maintained for correct operation. In addition to the following start-up and adjustment items, refer to further information in *Operational Checks* section.

Drain Trap Priming

The drain trap MUST be primed prior to furnace startup. To prime, fill both sides of the drain trap with water. This ensures proper furnace drainage upon startup and prohibits the possibility of flue gases escaping through the drain system.

Furnace Operation

Purge gas lines of air prior to startup. Be sure not purge lines into an enclosed burner compartment. Follow NFPA 54, National Fuel Gas Code for proper purging methods. In Canada, follow approved purging methods in CAN/CSA B149.1-15.

Check for leaks using an approved chloride-free soap and water solution, an electronic combustible gas detector, or other approved method. Verify that all required kits (propane gas, high altitude, etc.) have been appropriately installed.

Furnace Startup

1. Close the manual gas shutoff valve external to the furnace.
2. Turn off the electrical power to the furnace.
3. Set the room thermostat to the lowest possible setting.
4. Remove the burner compartment door.

NOTE: This furnace is equipped with an ignition device which automatically lights the burner. Do not try to light the burner by hand.

5. Move the furnace gas valve manual control to the OFF position.
6. Wait five minutes then smell for gas. Be sure check near the floor as some types of gas are heavier than air.
7. If you smell gas after five minutes, immediately follow the safety instructions in the *Safety Considerations* on page 3 of this manual. If you do not smell gas after five minutes, move the furnace gas valve manual control to the ON position.
8. Replace the burner compartment door.
9. Open the manual gas shutoff valve external to the furnace.
10. Turn on the electrical power to the furnace.
11. Adjust the thermostat to a setting above room temperature.
12. After the burners are lit, set the thermostat to desired temperature.

Furnace Shutdown

1. Set the thermostat to the lowest setting.

   The integrated control will close the gas valve and extinguish flame. Following a 15 second delay, the induced draft blower will be de-energized. After the blower off delay time expires, the blower de-energizes.
2. Remove the burner compartment door and move the furnace gas valve manual control to the OFF position.
3. Close the manual gas shutoff valve external to the furnace.
4. Replace the burner compartment door.

Gas Supply Pressure Measurement

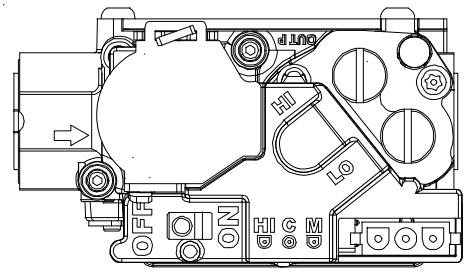

White-Rodgers Model 36J54 (Two-Stage)

Figure 46A

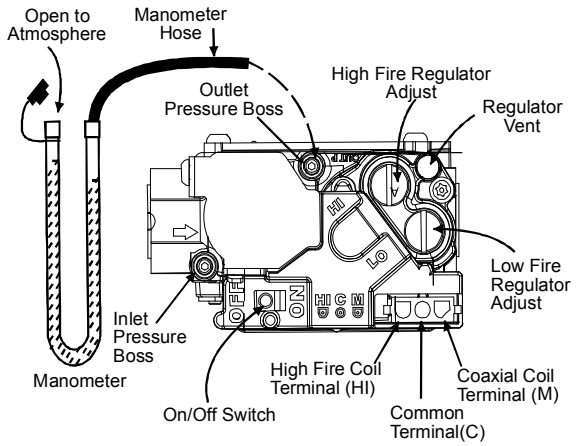

White-Rodgers Model 36J54 Connected to Manometer

Figure 46B

INLET GAS SUPPLY PRESSURE		
Natural Gas	Minimum: 4.5" w.c.	Maximum: 10.0" w.c.
Propane Gas	Minimum: 11.0" w.c.	Maximum: 13.0" w.c.

CAUTION

TO PREVENT UNRELIABLE OPERATION OR EQUIPMENT DAMAGE, THE INLET GAS SUPPLY PRESSURE MUST BE AS SPECIFIED ON THE UNIT RATING PLATE WITH ALL OTHER HOUSEHOLD GAS FIRED APPLIANCES OPERATING.

The line pressure supplied to the gas valve must be within the range specified below. The supply pressure can be measured at the gas valve inlet pressure tap or at a hose fitting installed in the gas piping drip leg. The supply pressure must be measured with the burners operating. To measure the gas supply pressure, use the following procedure.

1. Turn OFF gas to furnace at the manual gas shutoff valve external to the furnace.
2. Connect a calibrated water manometer (or appropriate gas pressure gauge) at either the gas valve inlet pressure tap or the gas piping drip leg. See White-Rodgers 36J54 gas valve figure for location of inlet pressure tap.

NOTE: If using the inlet pressure tap on the White-Rodgers 36J54 gas valve, then use the 36G/J Valve Pressure Check Kit, Part No. 0151K00000S.

3. Turn ON the gas supply and operate the furnace and all other gas consuming appliances on the same gas supply line.
4. Measure furnace gas supply pressure with burners firing. Supply pressure must be within the range specified in the *Inlet Gas Supply Pressure* table.

If supply pressure differs from table, make the necessary adjustments to pressure regulator, gas piping size, etc., and/or consult with local gas utility.

5. Turn OFF gas to furnace at the manual shutoff valve and disconnect manometer. Reinstall plug before turning on gas to furnace.
6. Turn OFF any unnecessary gas appliances stated in step 3.

GAS MANIFOLD PRESSURE MEASUREMENT AND ADJUSTMENT

CAUTION

TO PREVENT UNRELIABLE OPERATION OR EQUIPMENT DAMAGE, THE GAS MANIFOLD PRESSURE MUST BE AS SPECIFIED ON THE UNIT RATING PLATE. ONLY MINOR ADJUSTMENTS SHOULD BE MADE BY ADJUSTING THE GAS VALVE PRESSURE REGULATOR.

Only small variations in gas pressure should be made by adjusting the gas valve pressure regulator. The manifold pressure must be measured with the burners operating. To measure and adjust the manifold pressure, use the following procedure.

1. Turn OFF gas to furnace at the manual gas shutoff valve external to the furnace.
2. Turn off all electrical power to the system.
3. Outlet pressure tap connections:

   White-Rodgers 36J54 valve: Back outlet pressure test screw (inlet/outlet pressure tap) out one turn (counterclockwise, not more than one turn).
4. Attach a hose and manometer to outlet pressure tap .
5. Turn ON the gas supply.

Follow this procedure to test the gas valve pressure at 100% firing rate.

Run High Fire

It is recommended that the CoolCloud phone application be used for all functional tests. If a manual test is preferred there are two methods available.

Method 1 (Temporary Test):

1. **Using the on board push button switches, enter the Gas Pressure Test menu (7 segment display "gPt") and select YES to enable the Gas Pressure Test. The system will operate in high fire for 5 minutes or until the test is terminated by pressing any of the 3 on board push button switches.**

Method 2 (Longer Term Test):

1. **Turn off the furnace**
2. **If installing a communicating fossil fuel system, make sure the 1,2,R,C terminal is either removed or there are no wires connected. If utilizing an accessory module to control a non-communicating heat pump, disconnect the RJ12 jack from the furnace.**
3. **Provide power to the furnace**

4. **Provide a thermostat W call. The system will continuously run at 100% firing rate.**
5. **When test is complete, remove the W (heat) call to the furnace. The system will shut down.**

Run Low Fire

1. **Turn off the furnace**
2. **If installing a communicating fossil fuel system, make sure the 1,2,R,C terminal is either removed or there are no wires connected. If utilizing an accessory module to control a non-communicating heat pump, disconnect the RJ12 jack from the furnace.**
3. **Provide power to the furnace**
4. **Provide a thermostat W call and allow furnace to begin its ignition sequence**
5. **Remove thermostat W call and allow furnace to enter idol state (7 segment display IdL)**
6. **Provide the thermostat W call again. The furnace will now operate in low stage for greater than 5 minutes (assuming the target runtime has been set to something greater than 10 minutes).**
7. **When test is complete, remove the W (heat) call to the furnace. The system will shut down**

Using a leak detection

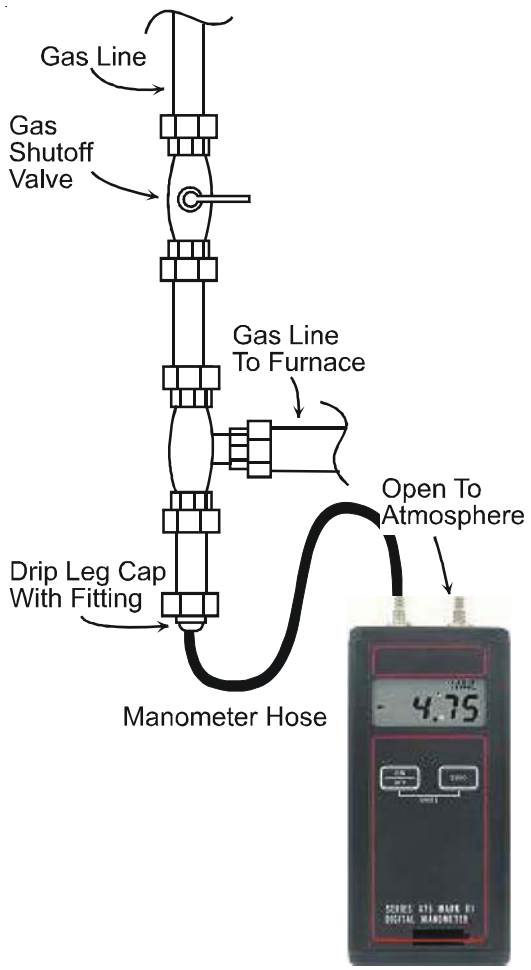

Measuring Inlet Gas Pressure (Alt. Method)
Figure 47

NOTE: When converting from natural gas to L.P. consult your distributor for proper conversion kit.

Manifold Gas Pressure			
Gas		Range	Nominal
Natural	Low Stage	1.6 - 2.2" w.c.	1.9" w.c.
	High Stage	3.2 - 3.8" w.c.	3.5" w.c.
Propane	Low Stage	5.7 - 6.3" w.c.	6.0" w.c.
	High Stage	9.7 - 10.3" w.c.	10.0" w.c.

Gas Input Rate Measurement (Natural Gas Only)

The actual gas input rate to the furnace must never be greater than that specified on the unit rating plate. To measure natural gas input using the gas meter, use the following procedure.

1. Turn OFF the gas supply to all other gas-burning appliances except the furnace.
2. While the furnace is operating at high fire rate, time and record one complete revolution of the gas meter dial, measuring the smallest quantity, usually the dial that indicates ½ cu. ft. per revolution. You will use this number to calculate the quantity of gas in cubic ft. if the furnace would consume if it ran steadily for one hour (3600 seconds).

3. If the ½ cu. ft. dial was used, multiply your number x 2.

   EXAMPLE: If it took 23 seconds to complete one revolution of the ½ ft. dial (23 x 2 = 46).

This tells us that at this rate, it would take 46 seconds to consume one cu. ft. of gas. 3600 / 46 = 78.

This tells us that in one hour, the furnace would consume 78 cu. ft. of gas.

The typical value range for 1 cu. ft. of natural gas is around 1000 BTU. Check with your gas utility, if possible. In this example, the furnace is consuming 78,000 BTUH.

NOTE: The final manifold pressure cannot vary by more than ± 0.3" w.c. for Natural and ± 0.5" for LP from the specified setting. Consult your local gas supplier if additional input rate adjustment is required.

4. Turn ON gas to and relight all other appliances turned off in step 1. Be certain that all appliances are functioning properly and that all pilot burners are operating.

Temperature Rise

Temperature rise must be within the range specified on the unit rating plate. An incorrect temperature rise may result in condensing in or overheating of the heat exchanger. An airflow and temperature rise table is provided in the Specification Sheet applicable to your model. Determine and adjust temperature rise as follows:

1. Operate furnace with burners firing for approximately ten minutes. Ensure all registers are open and all duct dampers are in their final (fully or partially open) position.
2. Place thermometers in the return and supply ducts as close to the furnace as possible. Thermometers must not be influenced by radiant heat by being able to "see" the heat exchanger.
3. Subtract the return air temperature from the supply air temperature to determine the air temperature rise. Allow adequate time for thermometer readings to stabilize.
4. Adjust temperature rise by adjusting the circulator blower speed. Increase blower speed to reduce temperature rise. Decrease blower speed to increase temperature rise. Refer to *Startup Procedure and Adjustment -Circulator Blower Speeds* for speed changing details.

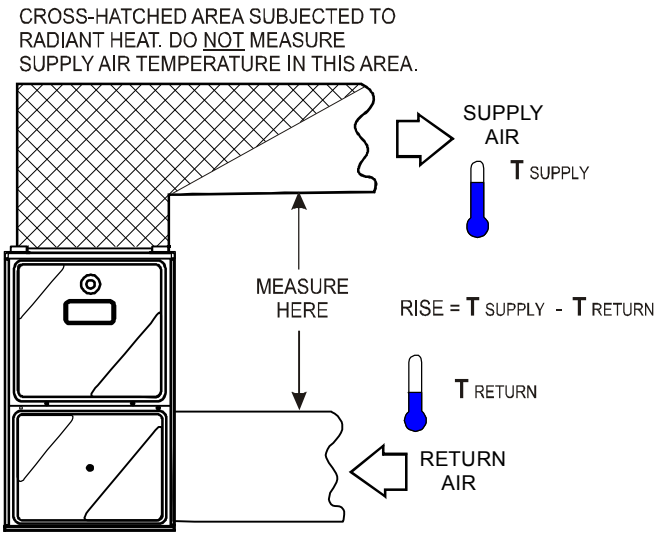

Temperature Rise Measurement

Figure 49

Diagnostics

Accessing the furnace's diagnostic menu provides access to the last six faults detected by the furnace. Faults are stored most recent to least recent, Any consecutively repeated fault is stored a maximum of three times. Example: A clogged return air filter causes the furnace limit to trip repeatedly. The control will only store this fault the first three consecutive times the fault occurs. Navigate to the diagnostics menu as described above in the thermostat installation manual.

NOTE: It is highly recommended that the fault history be cleared when performing maintenance or servicing the furnace.

Normal Sequence of Operation

Power Up

The normal power up sequence is as follows:

- 115 VAC power applied to furnace.
- Integrated control module performs internal checks.
- Integrated control module monitors safety circuits continuously.
- Furnace awaits call from thermostat. 7-segment LED's display LDL while awaiting call from thermostat.

SYSTEM OPERATION

Heating Mode

The normal operational sequence in heating mode is as follows:

- W thermostat contact closes, initiating a call for heat.
- Integrated control module performs safety circuit checks.
- Induced draft blower is energized on high speed for a 15-second prepurge.
- Induced draft blower steps to low speed following prepurge. Low stage pressure switch contacts are closed.
- Igniter warm up begins upon Inducer draft blower step to low speed and presence of closed low stage pressure switch contacts.
- Gas valve opens at end of igniter warm up period, delivering gas to burners and establishing flame.
- Integrated control module monitors flame presence. Gas valve will remain open only if flame is detected.
- Based on the furnace internal control algorithms the gas valve and induced draft blower may continue operating on low stage or both will change to high stage. After a power cycle, the first heat call will result in high stage operation.
- Circulator blower is energized on heat speed following the selected blower on delay and will begin to ramp up. Electronic air cleaner terminal is energized with circulator blower.
- Furnace is now operating on the specified stage determined by the internal control algorithm.
- Furnace runs , integrated control module monitors safety circuits continuously.
- If the internal algorithm changes the call from low heat to high heat, the integrated control module will immediately switch the induced draft blower, gas valve, and circulator blower to their high stage settings.
- If the internal algorithm changes the call from high heat to low heat, the control will immediately switch the induced draft blower and gas valve to their low stage settings. The circulator blower will remain on high heating speed for thirty (30) seconds before switching to the low heat circulating speed.
- W thermostat contacts open, completing the call for heat.
- Gas valve closes, extinguishing flame.
- Induced draft blower is de-energized following a 15 second post purge.
- Circulator blower continues running for the selected heat off delay period.

  The speed run during this period depends on the last heat call provided by the thermostat.

  If the last call for heat was a call for low heat, the air circulator motor will run on low heat speed for the duration of the heat off delay period.

  If the last call for heat was a call for high heat, the air circulating motor will run on the high heating speed for thirty (30) seconds and then switch to the low heating speed for the remainder of the heat off delay period.
- Circulator blower and electronic air cleaner terminal are de-energized.
- Circulator blower shuts off after the heat off delay period expires.
- Furnace awaits next call from thermostat.

Operational Checks

The burner flames should be inspected with the burner compartment door installed. Flames should be stable, quiet, soft, and blue (dust may cause orange tips but they must not be yellow). Flames should extend directly outward from the burners without curling, floating, or lifting off. Flames must not impinge on the sides of the heat exchanger firing tubes.

Safety Circuit Description

A number of safety circuits are employed to ensure safe and proper furnace operation. These circuits serve to control any potential safety hazards and serve as inputs in the monitoring and diagnosis of abnormal function. These circuits are continuously monitored during furnace operation by the integrated control module.

Integrated Control Module

The integrated control module is an electronic device which, if a potential safety concern is detected, will take the necessary precautions and provide diagnostic information through an LED.

Primary Limit

The primary limit control is located on the partition panel and monitors heat exchanger compartment temperatures. It is a normally-closed (electrically), automatic reset, temperature-activated sensor. The limit guards against overheating as a result of insufficient conditioned air passing over the heat exchanger.

Auxiliary Limit

The auxiliary limit controls are located on or near the circulator blower and monitors blower compartment temperatures. They are a normally-closed (electrically), manual-reset sensors. These limits guard against overheating as a result of insufficient conditioned air passing over the heat exchanger.

Rollout Limit

The rollout limit controls are mounted on the burner/manifold assembly and monitor the burner flame. They are normally-closed (electrically), manual-reset sensors. These limits guard against burner flames not being properly drawn into the heat exchanger.

SYSTEM OPERATION

Pressure Switches

The pressure switches are normally-open (closed during operation) negative air pressure-activated switches. They monitor the airflow (combustion air and flue products) through the heat exchanger via pressure taps located on the induced draft blower and the coil front cover. These switches guard against insufficient airflow (combustion air and flue products) through the heat exchanger and/or blocked condensate drain conditions.

Flame Sensor

The flame sensor is a probe mounted to the burner/manifold assembly which uses the principle of flame rectification to determine the presence or absence of flame.

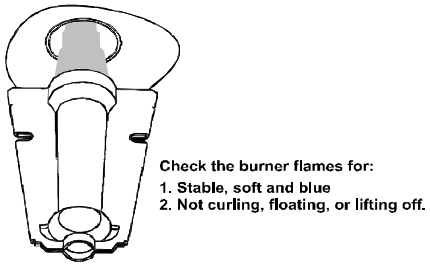

Burner Flame

Figure 57

Troubleshooting

Electrostatic Discharge (ESD) Precautions

NOTE: **Discharge body's static electricity before touching unit. An electrostatic discharge can adversely affect electrical components.**

Use the following precautions during furnace installation and servicing to protect the integrated control module from damage. By putting the furnace, the control, and the person at the same electrostatic potential, these steps will help avoid exposing the integrated control module to electrostatic discharge. This procedure is applicable to both installed and uninstalled (ungrounded) furnaces.

1. Disconnect all power to the furnace. Do not touch the integrated control module or any wire connected to the control prior to discharging your body's electrostatic charge to ground.
2. Firmly touch a clean, unpainted, metal surface of the furnace away from the control. Any tools held in a person's hand during grounding will be discharged.
3. Service integrated control module or connecting wiring following the discharge process in step 2. Use caution not to recharge your body with static electricity; (i.e., do not move or shuffle your feet, do not touch ungrounded objects, etc.). If you come in contact with an ungrounded object, repeat step 2 before touching control or wires.
4. Discharge your body to ground before removing a new control from its container. Follow steps 1 through 3 if installing the control on a furnace. Return any old or new controls to their containers before touching any ungrounded object.

Diagnostic Chart

WARNING

HIGH VOLTAGE !

To avoid personal injury or death due to electrical shock, disconnect electrical power BEFORE performing any service or maintenance.

Refer to the *Troubleshooting Chart* in the back of this manual for assistance in determining the source of unit operational problems. The 7-segment LED displays will display an error code that may contain a letter and number. The error code may be used to assist in troubleshooting the unit.

Resetting From Lockout

Furnace lockout results when a furnace is unable to achieve ignition after three attempts during a single call for heat. It is characterized by a non-functioning furnace and an EE0 code displayed on the 7-segment display. If the furnace is in "lockout", it will (or can be) reset in any of the following ways.

1. Automatic reset. The integrated control module will automatically reset itself and attempt to resume normal operations following a one hour lockout period.
2. Manual power interruption. Interrupt 115 volt power to the furnace.
3. Manual thermostat cycle. Lower the thermostat so that there is no longer a call for heat for 1 -20 seconds then reset to previous setting.

NOTE: **If the condition which originally caused the lockout still exists, the control will return to lockout. Refer to the *Troubleshooting Chart* for aid in determining the cause.**

SYSTEM OPERATION

Maintenance

Annual Inspection

WARNING

To avoid electrical shock, injury or death, disconnect electrical power before performing any maintenance. If you must handle the igniter, handle with care. Touching the igniter element with bare fingers, rough handling or vibration could damage the igniter resulting in premature failure. Only a qualified servicer should ever handle the igniter.

The furnace should be inspected by a qualified installer, or service agency at least once per year. This check should be performed at the beginning of the heating season. This will ensure that all furnace components are in proper working order and that the heating system functions appropriately. Pay particular attention to the following items. Repair or service as necessary.

- Flue pipe system. Check for blockage and/or leakage. Check the outside termination and the connections at and internal to the furnace.
- Heat exchanger. Check for corrosion and/or buildup within the heat exchanger passageways.
- Burners. Check for proper ignition, burner flame, and flame sense.
- Drainage system. Check for blockage and/or leakage. Check hose connections at and internal to furnace.
- Wiring. Check electrical connections for tightness and/or corrosion. Check wires for damage.
- Filters.

Filters

Filter Maintenance

Improper filter maintenance is the most common cause of inadequate heating or cooling performance. Filters should be cleaned (permanent) or replaced (disposable) every two months or as required. When replacing a filter, it must be replaced with a filter of the same type and size.

Filter Removal

Depending on the installation, differing filter arrangements can be applied. Filters can be installed in either the central return register or a side panel external filter rack (upflow only). A media air filter or electronic air cleaner can be used as an alternate filter. Follow the filter sizes given in the Recommended Minimum Filter size table to ensure proper unit performance. To remove filters from an external filter rack in an upright upflow installation, follow the directions provided with external filter rack kit.

Horizontal Unit Filter Removal

Filters in horizontal installations are located in the central return register or the ductwork near the furnace.

To remove:

1. Turn OFF electrical power to furnace.
2. Remove filter(s) from the central return register or ductwork.
3. Replace filter(s) by reversing the procedure for removal.
4. Turn ON electrical power to furnace.

Media Air Filter or Electronic Air Cleaner Removal

Follow the manufacturer's directions for service.

Burners

Visually inspect the burner flames periodically during the heating season. Turn on the furnace at the thermostat and allow several minutes for flames to stabilize, since any dislodged dust will alter the flames normal appearance. Flames should be stable, quiet, soft, and blue (dust may cause orange tips but they must not be yellow). They should extend directly outward from the burners without curling, floating, or lifting off. Flames must not impinge on the sides of the heat exchanger firing tubes.

Induced Draft and Circulator Blowers

CAUTION

To ensure proper unit performance, adhere to the filter sizes given in the recommended Minimum Filter Size Table or Specification Sheet applicable to your model.

The bearings in the induced draft blower and circulator blower motors are permanently lubricated by the manufacturer. No further lubrication is required. Check motor windings for accumulation of dust which may cause overheating. Clean as necessary.

Condensate Trap and Drain System (Qualified Servicer Only)

Annually inspect the drain tubes, drain trap, and field-supplied drain line for proper condensate drainage. Check drain system for hose connection tightness, blockage, and leaks. Clean or repair as necessary.

Flame Sensor (Qualified Servicer Only)

Under some conditions, the fuel or air supply can create a nearly invisible coating on the flame sensor. This coating acts as an insulator causing a drop in the flame sense signal. If the flame sense signal drops too low the furnace will not sense flame and will lock out. The flame sensor should be carefully cleaned by a qualified servicer using emery cloth or steel wool. Following cleaning, the flame sense signal should be as indicated in the Specifications Sheet.

Flue Passages (Qualified Servicer Only)

The heat exchanger flue passageways should be inspected at the beginning of each heating season.

SYSTEM OPERATION

Before Leaving an Installation

- Cycle the furnace with the thermostat at least three times. Verify cooling and fan only operation.
- Review the Owner's Manual with the homeowner and discuss proper furnace operation and maintenance.
- Leave literature packet near furnace.

Repair and Replacement Parts

- When ordering any of the listed functional parts, be sure to provide the furnace model, manufacturing, and serial numbers with the order.
- Although only functional parts are shown in the parts list, all sheet metal parts, doors, etc. may be ordered by description.
- Parts are available from your distributor.

Functional Parts List-

Gas Valve	Blower Motor
Gas Manifold	Blower Wheel
Natural Gas Orifice	Blower Mounting Bracket
Propane Gas Orifice	Blower Cutoff
Igniter	Blower Housing
Flame Sensor	Inductor
Rollout Limit Switch	Heat Exchanger with
Primary Limit Switch	Recuperator Coil
Auxiliary Limit Switch	Coil Front Cover
Pressure Switch	Integrated Control Module
Induced Draft Blower	Transformer
Door Switch	Bluetooth Module

TROUBLESHOOTING

Seven Segment Displays – Comm AC/HP			
Mode	Main Menu		
	Segment 1	Segment 2	Segment 3
Idle	I	d	L
Constant Fan	F	A	n
Compressor Cooling, Low Stage	A	C	1
Compressor Cooling, High Stage	A	C	2
Compressor Heat, Low Stage	H	P	1
Compressor Heat, High Stage	H	P	2
Gas Heat, Low Stage	9	H	1
Gas Heat, High Stage	9	H	2
Defrost, Low Stage Gas Heat	d	F	1
Defrost, High Stage Gas Heat	d	F	2

Seven Segment Displays – Inverter AC/HP			
Mode	Main Menu		
	Segment 1	Segment 2	Segment 3
Idle	I	d	L
Constant Fan	F	A	n
Compressor Cooling	u	A	C
Compressor Heat	u	H	P
Gas Heat, Low Stage	9	H	1
Gas Heat, High Stage	9	H	2
Defrost, Low Stage Gas heat	d	F	1
Defrost, High Stage Gas heat	d	F	2

Seven Segment Displays – Non Comm Single Stage or Two Stage AC/HP			
Mode	Main Menu		
	Segment 1	Segment 2	Segment 3
Idle	I	d	L
Constant Fan	F	A	n
Compressor Cooling, Low Stage	1	A	C
Compressor Cooling, High Stage	2	A	C
Compressor Cooling, Single-Stage		A	C
Compressor Heat, Low Stage	1	A	C
Compressor Heat, High Stage	2	A	C
Compressor Heat, Single-Stage			
Gas Heat, Low Stage	9	H	1
Gas Heat, High Stage	9	H	2
Defrost, Low Stage Gas Heat	d	F	1
Defrost, High Stage Gas Heat	d	F	2

Seven Segment Displays – Humidifier, De-Humidifer, and Ventilator			
Mode	Main Menu		
	Segment 1	Segment 2	Segment 3
Humidifier	H	U	d
De-Humidifier	d	H	U
Ventilator	u	t	L

Special Heat Display			
Mode	Main Menu		
	Segment #1	Segment #2	Segment #3
Special Heat Relay 1	S	H	1
Special Heat Relay 2	S	H	2

TROUBLESHOOTING

Alarm Code Definition Table			
Status	**Seven Segment Display**		
Internal Control Fault	E	E	E
Lockout Due to Excessive Retries or Recycles	E	E	0
Low Stage Pressure Switch Stuck Closed At the Beginning of Heating	E	E	1
Low Stage Pressure Switch Open	E	E	2
Open High Limit Switch	E	E	3
Flame Detected When no Flame Should be Present	E	E	4
Open Fuse	E	E	5
Low Flame Signal	E	E	6
Igniter Fault or Improper Grounding	E	E	7
High Stage Pressure Switch Stuck Closed at Start of Heating Cycle	E	E	8
High Stage Pressure Switch Open	E	E	9
Reversed Line Polarity	E	E	A
Internal Gas Valve Error	E	E	b
External Gas Valve Error	E	E	C
Auxiliary Limit Switch Open	E	E	d
Condensate Switch Open	E	E	F
Grounding Fault	E	1	0
Rollout Switch Open	E	1	1
Redundant Relay Open	E	1	2
Redundant Relay Stuck Closed	E	1	3

Alarm Code Definition Table			
Status	**Seven Segment Display**		
Data Not Yet on Network	E	d	0
Invalid Data on Network	E	d	1
Invalid External Shared Data	E	d	4
Invalid Downloaded Firmware	E	d	5
Un-Recognized Data ID	E	d	6
Blower Motor Not Running	E	b	0
Blower Communication Alarm	E	b	1
Blower Motor HP/ID Mismatch	E	b	2
Blower Motor Operating in Power, Temperature, or Speed Limit	E	b	3
Blower Motor Current Trip or Lost Rotor	E	b	4
Blower Motor Locked Rotor	E	b	5
Over/Under Voltage Trip or Over Temperature Trip	E	b	6
Incomplete Parameters Sent to Motor	E	b	7
Inadequate Airflow	E	b	9
Network Communication Alarm	E	C	1
E-Module Network Communication Alarm	E	C	2
Bluetooth Module Network Communication Alarm	E	C	3
Equipment Relay Module Missing	E	C	4
Accessory Relay Module Missing	E	C	5

TROUBLESHOOTING

ClimateTalk Comm 2-Stage AC/HP		
Name	**7-Segment Display**	**Cloud / Phone App**
Idle	IdL	Idle
Constant Fan	FAn	Constant Fan
Compressor Cooling, Low Stage	AC1	Compressor Cooling, Low Stage
Compressor Cooling, High Stage	AC2	Compressor Cooling, High Stage
Compressor Heat, Low Stage	HP1	Compressor Heat, Low Stage
Compressor Heat, High Stage	HP2	Compressor Heat, High Stage
Gas Heat, Low Stage	GH1	Gas Heat, Low Stage
Gas Heat, High Stage	GH2	Gas Heat, High Stage
Defrost, Low Stage Gas Heat	dF1	Defrost, Low Stage Gas Heat
Defrost, High Stage Gas Heat	dF2	Defrost, High Stage Gas Heat
ClimateTalk Comm Inverter AC/HP		
Name	**7-Segment Display**	**Cloud / Phone App**
Idle	IdL	Idle
Constant Fan	FAn	Constant Fan
Compressor Cooling	uAC	Compressor Cooling
Compressor Heat	uAP	Compressor Heat
Gas Heat, Low Stage	GH1	Gas Heat, Low Stage
Gas Heat, High Stage	GH2	Gas Heat, High Stage
Defrost, Low Stage Gas Heat	dF1	Defrost, Low Stage Gas Heat
Defrost, High Stage Gas Heat	dF2	Defrost, High Stage Gas Heat
Single-Stage AC, Legacy 2-Stage or *DataAC AC/HP Units		
Name	**7-Segment Display**	**Cloud / Phone App**
Idle	IdL	Idle
Constant Fan	FAn	Constant Fan
Compressor Cooling, Low Stage	1AC	Compressor Cooling, Low Stage
Compressor Cooling, High Stage	2AC	Compressor Cooling, High Stage
Compressor Cooling, Single Stage	AC	Compressor Cooling, Single Stage
Compressor Heat, Low Stage	1AC	Compressor Heat, Low Stage
Compressor Heat, High Stage	2AC	Compressor Heat, High Stage
Compressor Heat, Single Stage	AC	Compressor Heat, Single Stage
Gas Heat, Low Stage	GH1	Gas Heat, Low Stage
Gas Heat, High Stage	GH2	Gas Heat, High Stage
Defrost, Low Stage Gas Heat	dF1	Defrost, Low Stage Gas Heat
Defrost, High Stage Gas Heat	dF2	Defrost, High Stage Gas Heat
Humidifier, De-Humidifier and Ventilator		
Name	**7-Segment Display**	**Cloud / Phone App**
Humidifier	HUd	Humidifier
De-Humidifier	dHU	De-Humidifier
Ventilator	uEL	Ventilator
Special Heat		
Name	**7-Segment Display**	**Cloud / Phone App**
Special Heat Relay 1	SH1	Special Heat Relay 1
Special Heat Relay 2	SH2	Special Heat Relay 2

***DataAC not yet available**

TROUBLESHOOTING

Furnace			
Name/Cloud/Phone App	**7 Segment Display**	**User Modifiable Options**	**Comments**
Last 6 Faults	L6F	N/A	Views the control last 6 history faults.
Learn Menu	Lrn	Yes or No.	Resets communication network.
Code Release No	Cr	N/A	Views the control firmware revision number and Shared Data number.
Shared Data Revision	Sr	N/A	Views the control Shared Data revision number and shared data upload.
Reset To Factory Default	rFd	Yes or No.	Reset the furnace setting to factory defaults.
Constant Fan Speed	FSd	Adjustable between 25% to + 100% with 10% ingrements. Default is 25%.	Select the indoor blower airflow at constant fan mode.
Gas Heating Airflow	gAF	Adjustable between Min and Max. Min, Max, Step and Default are defined in Shared Data.	Select the indoor blower airflow multiplier for gas heat operation.
Gas Heat Off Delay	gFd	Adjustable between 30 seconds to 180 seconds with 5 seconds increments. Default is 30 seconds.	Selects the indoor blower heat off delay.
Gas Heat On Delay	gnd	Adjustable between 5 seconds to 30 seconds with 30 seconds increments. Default is 90 seconds.	Selects the indoor blower heat off delay.
Gas Heat Trim Factor	gtF	Adjustable between -10% to +10% with 2% increments. Default is 0%.	Trims the heating airflow by the selected amount.
Gas Heat Stage Multiplier	gSt	Adjustable between Min and Max. Min, Max, Step and Default are defined in Shared Data.	Selects gas heat stage multiplier
Gas Pressure Test	gPt	Yes or No.	Checks gas valve pressure at 100% firing rate.
Function Enable/Disable	FEd		Not implemented in the initial
Backup Heat Balance Points	gbP	Adjustable between Min and Max. Min, Max, Step and Default are defined in Shared Data.	This menu only shows up when a communicating Heat Pump is detected.
Comfort Setting	CFS	First 5 option values are defined in Shared Data. The 6th option shall be hard-coded in the firmware with other 5 settings. The default value is Option 1.	Provides the 6 comfort setting options for the furnace staging algorithm operation, only shows up when ClimateTalk or DataAC T-Stat is not connected.
Hum On Enable	HEd	1 ~ 16 options and the default option is 15. See accessory relay board manual for list of 16 options.	Provides the 16 humidifier enabling options in different operation modes. Only visible when accessory relay board is detected. See accessory relay board manual for list of 16 options.
Ventilation On Time	VOt	Adjustable between 0 ~ 60 minutes. The default is 0 minute Off). See accessory relay board manual for list of 16 options.	Adjusts the ventilation on time and turn it on/off. Only visible when accessory relay board is detected.
DeHum Logic	dHL	Hi and Lo. The default is Lo. See accessory relay board manual for list of 16 options.	Provides the DeHum logic input level for DeHum operation. Only applies when the legacy 24VAC input is active.
SHR 1 Fan Enable	SF 1	OFF/Fan/nFA. See relay board manual for details.	Enables fan operation for special heat relay 1 on external Equipment Relay Module if it is detected.
SHR 2 Fan Enable	SF 2	OFF/Fan/nFA. See relay board manual for details.	Enables fan operation for special heat relay 2 on external Equipment Relay Module if it is detected.
SHR 1 Airflow Multiplier	SA 1	Adjustable between 70% to 100% with 5% increments. Default is 70%. See accessory relay board manual for list of 16 options.	Select fan multiplier for special heat relay 1 on external Equipment Relay Module if it is detected and fan enabled.
SHR 2 Airflow Multiplier	SA 2	Adjustable between 70% to 100% with 5% increments. Default is 70%.	Select fan multiplier for special heat relay 2 on external Equipment Relay Module if it is detected and fan enabled.

Outdoor AC/HP, Single-Stage AC/HP and DataAC AC/HP			
Name/Cloud/Phone App	**7 Segment Display**	**User Modifiable Options**	**Comments**
Equipment Relay Module	ACP	1AC, 2AC, 1hp, 2HP, Off. The default is 2HP.	Only visible when external equipment relay board is detected.
Tonnage	ton	Adjustable between 1 to 6 ton with 0.1 increments. Default is 3 ton.	Only visible when communicating outdoor unit is not detected.
Cool Trim Factor	CtF	Adjustable between -10% to +10% with 2% increments. Default is 0%.	Trims the cooling airflow by the selected amount.
Cool Airflow Profile	CAP	A(1), B(2), C(3), D(4 or 5)	Select cooling airflow profiles.
Cool On Delay	Cnd	Adjustable between 5 to 30 seconds with 5 seconds increments. Default is 5 seconds.	Selects the cooling on delay.
Cool Off Delay	CFd	Adjustable between 30 to 120 seconds with 30 seconds increments. Default is 60 seconds.	Selects the cooling off delay.
Cool Stage Multiplier	CSt	Adjustable between 60% to + 100% with 1% increments. Default is 70%.	Selects stage multiplier for 2-stage OD unit.
Defrost Gas Heat Stage	dHS	1 or 2	Selects the gas heat stage for defrost operation.
Compressor Balance Points	CbP	Adjustable and defined in Shared Data	Provides the compressor balance point options for HP operation.
HP Trim Factor	HtF	Adjustable between -10% to +10% with 2% increments. Default is 0%.	Trims the heating airflow by the selected amount.
HP On Delay	Hnd	Adjustable between 5 to 30 seconds with 5 seconds increments. Default is 5 seconds.	Selects the HP heating on delay.
HP Off Delay	HFS	Adjustable between 30 to 120 seconds with 30 seconds increments. Default is 60 seconds.	Selects the HP heating off delay
HP Stage Multiplier	HSt	Adjustable between 70% to 100% with 5% increments. Default is 70%.	Select stage multiplier for 2-stage OD unit.

TROUBLESHOOTING

Push Button Menu Options

ClimateTalk Comm Outdoor 2-Stage AC/HP			
Name/Cloud/Phone App	**7 Segment Display**	**User Modifiable Options**	**Comments**
Cool Trim Factor	CtF	-10%, -8%,-6%, -4%, -2%, 0%, 2%, 4%, 6%, 8%,10%	Trims the cooling airflow by the selected amount.
Cool Airflow Profile	CAP	A, B, C, D	Select cooling airflow profiles.
Cool On Delay	Cnd	5, 10, 20, 30	Selects the cooling on delay.
Cool Off Delay	CFd	30, 60, 90, 120	Selects the cooling off delay.
Dehumidifcation Enable	dHE	ON, OFF	Enables the dehum function for OD operation.
Defrost Gas Heat Stage	dHS	1 or 2	Selects the gas heat stage for defrost operation.
Compressor Balance Points	CbP	Adjustable and defined in Shared Data	Selects the compressor balance point options for HP operation.
HP Trim Factor	HtF	-10%, -8%,-6%, -4%, -2%, 0%, 2%, 4%, 6%, 8%,10%	Trims the heating airflow by the selcted amount
HP On Delay	Hnd	5, 10, 15	Selects the HP heating on delay.
HP Off Delay	HFd	30, 50, 70, 90	Selects the HP heating off delay.
HP Defrost Interval	Hdi	30, 60, 90, 120	Provides the defrost options for compressor heating operation.
Compressor Delay	CdL	0, 5, 15, 30	Provides the compressor delay options for heating operation.
History Fault and Clear	FCL	Yes or No.	Views the comm outdoor history and clear the outdoor unit history fault.

ClimateTalk Comm Outdoor Inverter AC/HP			
Name/Cloud/Phone App	**7 Segment Display**	**User Modifiable Options**	**Comments**
Boost Mode	bSt	On or Off	Provides the options for inverter boot operation.
Boost Temp	btt	On(Always), 70F, 75F, 80F, 85F, 90F, 95F, 100F, 105F	Provides the 9 temperature options for boot operation.
Set Max Current	SCt	OFF, 40%, 50%, 60%, 70%, 80%, 90%	Selects Max Current options
Vertical Rise	utr	SL (Same Level), OL (Outdoor Lower), IL (Indoor Lower)	Selects the level of outdoor vas indoor equipment.
System Reset Menu	Srt	Yes or No.	Reset all outdoor unit settings to factory default.
System Verification Test	Sut	On or Off	Runs System Verification Test after Installation.
Pump Down	PPd	On or Off	Enters Pump Down mode.
Charge Mode	Cr9	On or Off	Enters charge mode.
Cool-Trim Factor - High	CtH	-15, -12, -9, -6, -3, 0, 3, 6, 9, 12, 15	Trims the cooling airflow by the selected amount.
Cool-Trim Factor - Intermediate	Cti	-15, -12, -9, -6, -3, 0, 3, 6, 9, 12, 15	Trims the cooling airflow by the selected amount.
Cool-Trim Factor - Low	CtL	-15, -12, -9, -6, -3, 0, 3, 6, 9, 12, 15	Trims the cooling airflow by the selected amount.
Cool Airflow Profile	CAP	A, B, C, D	Select cooling airflow profiles.
Cool On Delay	Cnd	5, 10, 20, 30	Selects the cooling on delay.
Cool Off Delay	CFd	30, 60, 90, 120	Selects the cooling off delay.
Dehum Enable	dHE	On or Off	Enables the dehum function for compressor operation.
Cool Reset Menu	CLr	Yes or No.	Resets all cooling settings to factory default.
Cool Max RPS Range	CrP	01(58 to 62.5 RPS), 02(63 to 67.5 RPS), 03(68RPS), 04(68.5 to 73 RPS), 05(73.5 to 78 RPS)	Selects the appropriate range for the installed system configuration.
Cool Max RPS Selection	CrS	10 RPS values from inverter	Selects the appropriate compressor RPS for the installed system configuration.
Defrost Gas Heat Stage	dHS	1 or 2	Selects the gas heat stage for defrost operation.
Compressor Balance Points	CbP	Adjustable and defined in Shared Data	Provides the compressor balance point options for HP operation.
Force Defrost	Fdd	On or Off	
HP Trim Factor - High	HtH	-15, -12, -9, -6, -3, 0, 3, 6, 9, 12, 15	Trims the heating airflow by the selected amount.
HP Trim Factor - Intermediate	Hti	-15, -12, -9, -6, -3, 0, 3, 6, 9, 12, 15	Trims the heating airflow by the selected amount.
HP Trim Factor - Low	HtL	-15, -12, -9, -6, -3, 0, 3, 6, 9, 12, 15	Trims the heating airflow by the selected amount.
HP On Delay	Hnd	5, 10, 20, 30	Selects the HP heating on delay.
HP Off Delay	HFd	30, 60, 90, 120	Selects the HP heating on delay.
HP Defrost Interval	dFi	Maximum amount of compressor runtime before defrost occurs.	Provides the defrost options for compressor heating operation.
HP Reset Menu	Hrt	Yes or No.	Resets all heating settings to factory default.
HP Max RPS Range	HrP	01(58 to 62.5 RPS), 02(63 to 67.5 RPS), 03(68RPS), 04(68.5 to 73 RPS), 05(73.5 to 78 RPS)	Selects the appropriate range for the installed system configuration.
HP Max RPS Selection	HrS	10 RPS values from inverter	Selects the appropriate compressor RPS for the installed system configuration.
History Fault and Clear	FCL	Yes or No.	Views the comm outdoor history and clear the outdoor unit history fault.

TROUBLESHOOTING

Symptoms of Abnormal Operation	Diagnostic/ Status LED Codes	Fault Description	Possible Causes	Corrective Action(s)	Notes & Cautions
• Furnace fails to operate. • Integrated control module LED display provides no signal.	None	• No 115 power to furnace or no 24 volt power to integrated control module. • Blown fuse or tripped circuit breaker. • Integrated control module is non-functional.	• Manual disconnect switch turned OFF, door switch open or 24 volt wire improperly connected or loose. sense circuit. • Furnace electrical supply shared with other devices. • Integrated control module is non-functional.	• Check 115 power to furnace and integrated control module. • Check for possible shorts in 115 circuit. Repair as necessary. • Replace non-functional integrated control module.	• Turn power OFF prior to repair. • Read precautions in "Electrostatic Discharge" section manual. • Replace control with correct replacement part.
• LED display indicates idL	idL	• Idle	• Normal operation	• None	• Normal operation
• Furnace fails to operate. • Integrated control module LED display provides EEd error code.	EEd	• Furnace lockout due to an excessive number of ignition "retries" (3 total).	• Failure to establish flame. Cause may be no gas to burners, front cover pressure switch stuck open, bad igniter or igniter alignment, improper orifces, or coated/oxidized or improperly connected fame sensor. • Loss of fame after establishment. Cause may be interupted gas supply, lazy burner fames (improper gas pressure or restriction in fue and/or combustion air piping), front cover pressure switch opening, or improper induced draft blower performance.	• Locate and correct gas interruption. • Check front cover pressure switch operation (hose, wiring, contact operation). Correct if necessary. • Replace or realign igniter. • Check fame sense signal. Sand sensor if coated and/or oxidized. • Check fue piping for blockage, proper length, elbows, and termination. • Verify proper induced draft blower performance.	• Turn power OFF prior to repair. • Igniter is fragile, handle with care. • Clean fame sensor with steel wool. • See "Vent/Flue Pipe" section for piping details.
• Furnace fails to operate. • Integrated control module LED display provides EE1 error code.	EE1	• Low stage pressure switch circuit is closed at start of heating cycle.	• Low stage pressure switch contacts sticking. • Shorts in pressure switch circuit wiring.	• Replace low stage pressure switch. • Repair short in wiring.	• Turn power OFF prior to repair. • Replace pressure switch with proper replacement part.
• Induced draft blower runs continously with no further furnace operation. • Integrated control module LED display provides EE2 error code.	EE2	• Low stage pressure switch circuit is not closed.	• Pressure switch hose blocked pinched, or connected improperly. • Blocked fue and/or inlet air pipe, blocked drain system or weak induced draft blower. • Incorrect pressure switch set point or malfunctioning switch contacts. • Loose or improperly connected wiring.	• Inspect pressure switch hose. Repair/replace if necessary. • Inspect fue and/or inlet air piping for blockage, proper length, elbows, and termination. Check drain system. Correct as necessary. • Correct pressure switch set point or contact motion. • Tighten or correct wiring connection.	• Turn power OFF prior to repair. • Replace pressure switch with proper replacement part. • Replace induced draft blower with proper replace-ment part.
• Circulator blower runs continuously. No furnace operation. • Integrated control module LED display provides EE3 error code.	EE3	• Primary limit circuit is open.	• Insufficient conditioned air over the heat exchanger. Blocked filters, restrictive duct work, improper circulator blower speed, or failed circulator blower motor. • Loose or improperly connected wiring in high limit circuit.	• Check filters and ductwork for blockage. Clean filters or remove obstruction. • Check circulator blower speed and performance. Correct speed or replace blower motor if necessary. • Tighten or correct wiring connection.	• Turn power OFF prior to repair. • See Specification Sheet applicable to your model* for allowable rise range and proper circulator speed.

TROUBLESHOOTING

Symptoms of Abnormal Operation	Diagnostic/ Status LED Codes	Fault Description	Possible Causes	Corrective Action(s)	Notes & Cautions
• Induced draft blower and circulator blower runs continuously. No furnace operation. • Integrated control module LED display provides EE4 error code.	EE4	• Flame sensed with no call for heat.	• Short to ground in fame sense circuit. • Lingering burner fame. • Slow closing gas valve.	• Correct short at fame sensor or in fame sensor wiring. • Check for lingering fame. • Verify proper operation of gas valve.	• Turn power off to repair.
• No furnace operation. • Integrated control module LED display provides EE5 error code.	EE5	• Flame sensed with no call for heat.	• Short in low voltage wiring.	• Locate and correct short in low voltage wiring.	• Turn power OFF prior to repair. • Replace fuse with 3-amp automotive type.
• Normal furnace operation with weak flame signal. • Integrated control module LED display provides EE6 error code.	EE6	• Flame sense micro amp signal is low.	• Short in low voltage wiring.	• Clean flame sensor if coated/ oxidized. • Inspect for proper sensor alignment. • Check inlet air piping for blockage, proper length, elbows, and termination. • Compare current gas pressure to rating plate. Adjust as needed.	• Turn power OFF prior to repair. • Clean flame sensor with steel wool. • See "Vent/Flue Pipe" section for piping details. • See rating plate for proper gas pressure.
• Furnace fails to operate. • Integrated control module LED display provides EE7 error code.	EE7	• Problen with igniter circuit.	• Improperly connected igniter. • Shorted igniter. • Poor unit ground. • Igniter relay fault on integrated control module.	• Check and correct wiring from integrated control module to igniter. • Replace shorted igniter. • Check and correct unit ground wiring. • Check igniter output from control. Replace if necessary.	• Turn power OFF prior to repair. • Replace igniter with correct replacement part. • Replace control with correct replacement part.
• Furnace fails to operate on high stage; furnace operates normally on low stage. • Integrated control module LED display provides EE8 error code.	EE8	• High stage pressure switch circuit is closed at start of heating cycle. • Induced draft blower is operating. • Furnace is operating on low stage only.	• High stage pressure switch contacts sticking. • Shorts in pressure switch circuit wiring. .	• Replace high stage pressure switch. • Repair short in wiring. .	• Turn power OFF prior to repair. • Replace pressure switch with proper replacement part.
• Furnace fails to operate on high stage; furnace operates normally on low stage. • Integrated control module LED display provides EE9 error code.	EE9	• High stage pressure switch circuit is not closed. • Induced draft blower is operating. • Furnace is operating on low stage only.	• Pressure switch hose blocked pinched, or connected improperly. • Blocked flue and/or inlet air pipe, blocked drain system or weak induced draft blower. • Incorrect pressure switch set point or malfunctioning switch contacts. • Loose or improperly connected wiring.	• Inspect pressure switch hose. Repair/replace if necessary. • Inspect flue and/or inlet air piping for blockage, proper length, elbows, and termination. Check drain system. Correct as necessary. • Check induced draft blower performance. Correct as necessary. • Correct pressure switch set point or contact motion. • Tighten or correct wiring connection.	• Turn power OFF prior to repair. • Replace pressure switch with proper replacement part. • Replace induced draft blower with proper replacement part.
• Furnace fails to operate. • Integrated control module LED display provide EEr error code.	EEr	• Polarity of 115 volt AC is reversed.	• Polarity of 115 volt AC power to furnace or integrated module is revered. • Poor unit ground.	• Review wiring diagram to correct polarity. • Verify proper ground. Correct if necessary. • Check and correct wiring.	• Turn power OFF prior to repair.
• Furnace fails to operate. • Integrated control module LED display provide EEb error code.	EEb	• Gas valve is not energized when it should be. • External Gas Valve Error.	• Miswired gas valve circuit. • Open gas valve circuit. • Gas valve relay on integrated control board stuck open.	• Check wiring in gas valve circuit. • Replace integrated control board.	• Turn power OFF prior to repair.

TROUBLESHOOTING

Symptoms of Abnormal Operation	Diagnostic / Status LED Codes	Fault Description	Possible Causes	Corrective Actions	Notes & Cautions
• Furnace fails to operate. • Integrated control module LED display provides EEA error code.	EEC	• Gas valve is energized when it should not be. • Internal Gas Valve Error	• Miswired gas valve circuit • Shorted gas valve wiring • Gas valve relay on integrated control board stuck open	• Check wiring in gas valve circuit • Replace integrated control board	• Turn power OFF prior to repair.
• Furnace fails to operate. • Integrated control module LED display provides EEd error code.	EEd	• Aux limit switch open (blower compartment)	• 115 volt power supply was shut off during heat cycle. •.Insuffcient conditioned air over the heat exchanger. Blocked flters, restrictive ductwork, improper circulator blower speed, or failed circulator blower motor.	• Check flters and ductwork for blockage. Clean flters or remove obstruction. • Check circulator blower speed and performance. Correct speed or replace blower motor if necessary. • Tighten or correct wiring connection.	• Turn power OFF prior to repair. • See Specifcation Sheet applicable to your model* for allowable rise range and proper circulator speed.
• Furnace fails to operate. • Integrated control module LED display provides EEF error code.	EEF	• Aux switch (condensate switch) open	• High water level in the evaporation coil.	• Check evap drain pan, trap, piping.	• Turn power OFF prior to service.
• Furnace fails to operate. • Integrated control module LED display provides E 10 error code.	E 10	• Grounding Fault	• Poor neutral connection	• Verify neutral wire connection to furnace & continuity to ground source	• Turn power off prior to service
• Furnace fails to operate. • Integrated control module LED display provides E 11 error code.	E 11	• Open roll out switch	• Gas pressure too high • Burners mis-aligned • Restricted heat exchanger or venting	• Check / correct gas pressure • Check / correct burner alignment • Check / correct restriction	• Turn power off prior to service
• Furnace fails to operate. • Integrated control module LED display provides Ed0 error code.	Ed0	• Data not yet on network.	No Network Data	• Populate shared data set using memory card.	• Turn power OFF prior to repair • Use memory card for the specifc model. • Insert memory card BEFORE turning power ON. Memory card may be removed after data is loaded and power is turned off. • Error code will be cleared once data is turned off.
• Operation different than expected or no operation. • Integrated control module LED display provides Ed 1 error code.	Ed 1	• Invalid memory card data.	• Shared data set on memory card has been rejected by integrated control module	• Verify shared data set is correct for the specifc model. Re-populate data using correct memory card if required.	• Turn power OFF prior to repair • Use memory card for the specifc model. • Insert memory card BEFORE turning power ON. Memory card may be removed after data is loaded and power is turned off. • Error code will be cleared once data is loaded and power is turned off.
• Furnace fails to operate. • Integrated control module LED display provides Eb0 error code.	Eb0	• Circulator blower motor is not running when it should be running.	• Loose wiring connection at circulator motor power leads or circulator motor power leads disconnected. • Open circuit in inductor or loose wiring connection at inductor (3/4 Hp and 1 Hp models only). • Failed circulator blower motor.	• Tighten or correct wiring connection. • Verify continuous circuit through inductor. Replace if open or short circuit. • Check circulator blower motor. Replace if necessary.	• Turn power OFF prior to repair • Replace inductor with correct replacement part. • Replace circulator motor with correct replacement part.

TROUBLESHOOTING

Symptoms of Abnormal Operation	Diagnostic / Status LED Codes	Fault Description	Possible Causes	Corrective Actions	Notes & Cautions
• Furnace fails to operate. • Integrated control module LED display provides Eb1 error code.	Eb1	• Integrated control module has lost communications with circulator blower motor.	• Loose wiring connection at circulator motor control leads. • Failed circulator blower motor. • Failed integrated control module.	• Tighten or correct wiring connection. • Check circulator blower motor. Replace if necessary. • Check integrated control module. Replace if necessary.	• Turn power OFF prior to repair • Replace circulator motor with correct replacement part. • Replace integrated control module with correct replacement part.
• Furnace fails to operate. • Integrated control module LED display provides Eb2 error code.	Eb2	• Circulator blower motor horse power in shared data set does not match circulator blower motor horse power.	• Incorrect circulator blower motor in furnace. • Incorrect shared data set in integrated control module.	• Verify circulator blower if motor horse power is the same specifed for the specifc furnace model. Replace if necessary. • Verify shared data set is correct for the specifc model. Re-populate data using correct memory card if required.	• Turn power OFF prior to repair • Replace motor with correct replacement part. • Use memory card for the specifc model • Insert memory card BEFORE turning power ON. Memory card may be removed after data is loaded and power is turned off. • Error code will be cleared once shared data and motor horse power match.
• Furnace operates at reduced performance. • Airfow delivered is less than expected. • Integrated control module LED display provides Eb3 error code.	Eb3	• Circulator blower motor is operating in a power, temperature, or speed limiting condition.	• Blocked filters. • Restrictive ductwork. • Undersized ductwork. • High ambient temperatures.	• Check filters for blockage. Clean filters or remove obstruction. • Check ductwork for blockage. Remove obstruction. Verify all registers are fully open. • Verify ductwork is appropriately sized for system. Resize/replace ductwork if necessary. • See "III. Product Description" and "IV. Location Requirements & Considerations" furnace installation requirements.	• Turn power OFF prior to repair.

TROUBLESHOOTING

Symptoms of Abnormal Operation	Diagnostic / Status LED Codes	Fault Description	Possible Causes	Corrective Actions	Notes & Cautions
• Furnace fails to operate. • Integrated control module LED display provides E64 error code.	E64	• Circulator blower motor senses a loss of rotor control. • Circulator blower motor senses high current.	• Abnormal motor loading, sudden change in speed or torque, sudden blockage of furnace air inlet/outlet	• Check filters, filter grills/registers, duct system, and furnace air inlet/outlet for blockages.	• Turn power OFF prior to repair
• Furnace fails to operate. • Integrated control module LED display provides E65 error code.	E65	• Circulator blower motor fails to start 10 consecutive times.	• Obstruction in circular blow housing. • Seized circular blower motor bearings • Failed circular blower motor.	• Check circular blower for obstructions. Remove and repair/replace wheel/motor if necessary	• Turn power OFF prior to repair. • Replace motor with correct replacement part. • Replace wheel with correct replacement part.
• Furnace fails to operate. • Integrated control module LED display provides E66 error code.	E66	• Circulator blower motor shuts down for over or under voltage condition. • Circulator blower motor shuts down due to over temperature condition on power module.	• High AC line voltage to furnace. • Low AC line voltace to furnace. • High ambient temperatures.	• Check power to furnace. Verify line voltage to furnace is within the range specified on the furnace rating plate. See "III. Product description" and IV Location Requirements and Considerations" furnace installation requirements.	• Turn power OFF prior to repair. • Replace motor with correct replacement part. • Use memory card for the specifc model.
• Furnace fails to operate. • Integrated control module LED display provides E67 error code.	E67	• Circulator blower motor does not have enough information to operate properly. Motor fails to start 40 consecutive times.	• Error with integrated control module. Motor has a rotor condition.	• Check integrated control module. Verify control is populated with correct shared data set. See data errors above for details. Check for locked rotor condition (see error code above for details).	• Turn power off prior to repair.
• Furnace operates at reduced performance or operates on low stage when high stage is expected. • Integrated control module LED display provides E69 error code.	E69	• Airflow is lower than demanded.	• Blocked filters. • Restrictive ductwork. • Undersized ductwork.	• Check filters for blockage. Clean filters or remove obstruction. • Check ductwork for blockage. Remove obstruction. Verify all registers are fully open. • Verify ductwork is appropriately sized for system. Resize/replace ductwork if necessary.	• Turn power OFF prior to repair.

TROUBLESHOOTING

1. **Internal Control Failure with Integrated Ignition Control.** Check for voltage to the furnace and low voltage at the control board. Check for blown fuse on the control board. If the control determines it has an internal fault, it enters a locked-out state. Any of the situations mentioned will cause the dual, 7-segment LED's to be **off**. The control board should only be replaced only after all other checks from the *Troubleshooting Chart - ComfortNet™* have been verified.
2. **System Lockout.** If a flame is not sensed during the first seven (4) seconds after the gas valve is energized, the control turns off the gas. There will then be a 30 second delay while the induced draft blower is energized to purge the heat exchanger. The ignitor will again be energized and preheated for an additional (1) second. The gas valve will then be energized. If flame is not sensed the gas valve will be de-energized and another purge will occur and a third ignitor warm up for an additional (2) seconds will occur. The control will cycle the gas valve a total of three (3) times before it determines it cannot establish measurable combustion and enters a locked out state. The diagnostic error code for this problem is **E0**. The control can be reset and brought out of lockout mode by turning the thermostat off for more than (5) seconds and less then (20) seconds and then back on. It can also be reset by turning off the electrical disconnect switch to the furnace for a minimum of 5 seconds.

NOTE: The control board will automatically reset one hour after lockout occurs. If the furnace frequently has to be reset, it means that a problem exists that should be corrected. Refer to *Troubleshooting Chart - ComfortNet™* on the following pages for aid in determining the cause.

3. **Low Stage Pressure Switch Stuck Closed.** If the control senses the low stage pressure switch is closed when the induced draft blower is off, it waits until the fault is corrected. The diagnostic error code for this problem is **E1**. The probable cause is either a faulty pressure switch or wiring.
4. **Low Stage Pressure Switch Stuck Open.** If, after the induced draft blower is energized, the low stage pressure switch does not close within 5 minutes, the control will go into a 1-hour lockout. The control will automatically reset fro lockout and restart the ignition sequance. The diagnostic error code for this problem is **E2**. The probable causes are either disconnected hose to the pressure switch, faulty pressure switch or wiring, restricted air intake or flue piping.
5. **Open Primary, Auxiliary, or Rollout Limit.** If the limit control opens, the air circulator blower and induced draft blower will be turned on until the limit closes. The diagnostic error code for this problem is **E3**. The probable cause is either low conditioned air flow due to dirty filter or resistance in duct work, faulty limit, faulty blower, blower speed set to low, misaligned burners, faulty induced draft blower, or blocked flue.
6. **Flame Sensed with No Call for Heat.** If the control senses a flame when the gas valve is de-energized, it will run the air circulation blower and the induced draft blower continuously with no further furnace operation. The diagnostic error code for this condition is **E4**. The probable causes are either a short to ground in flame sense circuit, miswiring, lingering burner flame or a slow closing gas valve.
7. **Open Fuse.** If the control detects an open fuse, it will inhibit all furnace operation, except the display of the error code. The diagnostic error code for this condition is **E5**. The probable cause is a short in the low voltage wiring, either internal to the furnace or external to the furnace.
8. **Low Flame Sense Signal.** If the furnace continues to operate and the micro-amp signal from the flame sensor falls below specified level. The diagnostic error code for this problem is **E6**. The probable cause is either a coated/oxidized sensor, incorrectly positioned senser in burner flame or lazy burner flame due to improper gas pressure or combustion air.
9. **Check Igniter or No Ground Condition.** Check for broken or improperly connected igniter. Check for proper ground and correct. The diagnostic error code for this problem is **E7**.
10. **High Stage Pressure Switch Stuck Closed.** If the control fails to operate at high stage heat when commanded to do so, the high stage pressure switch is stuck closed. For this condition, the furnace will operate at low stage only, regardless of the thermostat demand. The diagnostic error code for this condition is **E8**. The probable cause is sticking high stage pressure switch contacts or a short in the high stage pressure switch wiring.
11. **High Stage Pressure Switch Stuck Open.** This condition can occur if the pressure switch hose is blocked or pinched. Check for blocked flue and/or inlet air pipe. Blocked drain, weak induced draft blower and malfunctioning pressure switch are possible. The diagnostic error code for this problem is **E9** followed by a pause.
12. **Reversed Polarity.** If the 115V or 24V AC power leads are reversed, the furnace will fail to operate. The diagnostic error code for this problem is **EA**. The probable cause is either the 115V AC power to furnace or integrated control module is reversed, the 24V AC wires to transformer are reversed, or poor unit ground.
13. **No Shared Data.** The control does not contain any shared data. Shared data sets contain all the information required to drive the variable speed motor as well as calculate airflow demands. The furnace cannot function without the approriate shared data set. The diagnostic error code for the this condition is **d0**. A memory card must be used to populate shared data to the control. Contact your distributor to obtain the appropriate memory card for your particular furnace model.

NOTE: Turn **off** power to the furnace prior to inserting memory card onto the control. With memory card inserted onto control, turn power to furnace **on**. Control has accepted memory card data once control displays **ON** on the dual, 7-segment display. Memory card may be left on control or removed and used on another furnace of the same model. Turn power **off** to furnace prior to removing memory card.

14. **Invalid Memory Card Data.** This condition occurs if the control rejects the shared data set on a memory card. Memory cards are model specific. If a memory card for a different model is used to populate data to a specific fur-

nace, if will be rejected by the control. If using a memory card to populate shared data to a control, ensure the memory card is specific to the furnace. The diagnostic error code for this condition is **d4**.

NOTE: Turn **off** power to the furnace prior to inserting memory card onto the control. With memory card inserted onto control, turn power to furnace **on**. Control has accepted memory card data once control displays **ON** on the dual, 7-segment display. Memory card may be left on control or removed and used on another furnace of the same model. Turn power **off** to furnace prior to removing memory card.

15. **ECM Blower Motor Not Running.** This condition occurs if the control fails to detect the ECM blower motor running when it should be running. The furnace will not operate if the control detects the blower motor is not running when it should be running. The diagnostic error code for this condition is **b0**. The probable cause loose or disconnected wiring between the motor and control, an open inductor (3/4 Hp and 1 Hp motors only), or a failed ECM blower motor (see section S-16C in *Servicing*).
16. **ECM Motor Communciations Lost.** This condition occurs if the furnace control cannot communicate with the ECM blower motor. The furnace will not operate if the control cannot communicate with the blower motor. The diagnostic error code for this condition is **b1**. The probable cause loose or disconnected wiring between the motor and control, a failed ECM blower motor (see section S-16C in *Servicing*), or a failed control.
17. **Motor Horsepower Mismatch.** This condition occurs if the horsepower of the motor connected to the control does not match the motor horsepower specified in the shared data set. The furnace will not operate is there is a motor horsepower mismatch. The diagnostic error code for this condition is **b2**.

    Verify that the installed motor is the correct motor for the furnace model. Obtain the correct motor for the furnace model. Verify the shared data set is correct for the furnace. The shared data set may be corrected using the appropriate memory card. Contact your distributor for the correct memory card. See 13 and 14 above for additional memory card information.
18. **ECM Motor Operating in a Limiting Condition.** This condition will occur if the ECM operates in a power, speed, or temperature limiting condition. The furnace will continue operating at reduced performance. The diagnostic error code for the this condition is **b3**.

    Power Limit. In attempting to deliver the airflow demand, the motor may exceed its rated output power. The motor will reduce its output to prevent exceeding its power limit. This will result in lower than demanded airflow. This will occur under high loading conditions. High loading conditions could be due to blocked/clogged filters, blocked or restrictive ductwork, or undersized ductwork.

    Speed Limit. In attempting to deliver the airflow demand, the motor may exceed its maximum speed of 1500 RPM. The motor will reduce its speed to prevent exceeding its maximum. This will result in lower than demanded airflow. A blocked inlet, lightly loaded or no load conditions could cause high motor speeds.

    Temperature Limit. In attempting to deliver the airflow demand, the motor may exceed its temperature limit. The motor will reduce its output in an attempt to reduce its temperature. This will result in lower than demanded airflow. A high ambient temperatue at a high loading condition is the most probable cause. Reduce the ambient temperature and/or motor loading/demand.
19. **Motor Trips.** This condition occurs if the ECM motor senses a loss of control or becomes overloaded. The furnace may halt operation if the motor shuts down for a trip condition. The diagnostic error code for this condition is **b4**.

    Loss of Control (Lost Rotor Trip). This occurs if a sudden change in speed or torque is detected. The motor will shut down and restart if this condition is encountered. Possible causes are abnormal loading conditions due to sudden blockages of the duct system or sudden high increases in the loading on the motor.

    Overload (Current Trip). This occurs if the motor becomes overloaded due to high loading conditions. The motor will shut down and restart if this condition is encountered. High loading conditions could be due to blocked/clogged filters, blocked or restrictive ductwork, or undersized ductwork.
20. **Motor Locked Rotor.** This condition occurs if the motor fails to start after (10) consecutive attempts. The furnace will not operate if the ECM blower motor fails to start. The diagnostic error code for this condition is **b5**. The probable cause is an obstruction in the blower housing or wheel, siezed motor bearings, or a failed blower motor.
21. **Motor Volts.** This condition occurs if the line voltage is too low or too high, or if the motors power module gets too hot. The ECM motor will shut down while the abnormal condition is present. If the abnormal condition is cleared, the motor will restart. The furnace will be inoperable while the motor is off.

    Over Voltage. If the line voltage exceeds 140VAC, the motor will shut down due to an over voltage condition. Verify the line voltage to the furnace is within the range specified on the rating plate.

    Under Voltage. If the line voltage is less than 70VAC, the motor will shut down due to an under voltage condition. Verify the line voltage to the furnace is within the range specified on the rating plate.

    Over Temperature. A high ambient temperatue or a high loading condition is the most probable cause. Reduce the ambient temperature and/or motor loading/demand.

TROUBLESHOOTING

22. **Motor Parameters.** This condition occurs if the motor does not receive all the information is requires to operate or an event occurs that prevents the motor from running, or the motor fails to start for (40) consecutive attempts. The diagnostic error code for the this condition is **b7**. Probable causes are intermittent wiring connection between the control and motor, an error with the furnace control, or any of the conditions described in 19, 20, or 21 above.
23. **Low Indoor Airflow.** This condition occurs if the indoor airflow falls below a calculated minimum value. The minimum airflow value is calculated from factors defined in the shared data set. If the airflow falls below the calculated minimum, the furnace will continue to operate with the reduce airflow. If the furnace was operating at high stage, it will stage back to low in an effort to remedy the condition. The furnace will halt operation if the airflow falls to 0 CFM.

    The diagnostic error code for the this condition is **b9**. Probable causes are blocked/clogged filters, blocked or restrictive ductwork, or undersized ductwork.

TROUBLESHOOTING

Electrostatic Discharge (ESD) Precautions

Four Wire Motor Troubleshooting

Any manual testing of the 4 wire serially communicating motor should only be done with the ULTRACHECK-EZ diagnostic tool (part # UTT-01). All other methods may not be reliable or cause damage to the 4 wire motor. See section S-16C for additional details.

Diagnostic Chart

⚠ WARNING

HIGH VOLTAGE !

To avoid personal injury or death due to electrical shock, disconnect electrical power BEFORE performing any service or maintenance.

Refer to the *Troubleshooting Chart* in the Appendix for assistance in determining the source of unit operational problems. The 3X 7-segment LED display will display an error code that may contain a letter and number. The error code may be used to assist in troubleshooting the unit.

RESETTING FROM LOCKOUT

Furnace lockout results when a furnace is unable to achieve ignition after three attempts during a single call for heat. It is characterized by a non-functioning furnace and a **E 0** code displayed on the dual 7-segment display. If the furnace is in "lockout", it will (or can be) reset in any of the following ways.

1. Automatic reset. The integrated control module will automatically reset itself and attempt to resume normal operations following a one hour lockout period.
2. Manual power interruption. Interrupt 115 volt power to the furnace.
3. Manual thermostat cycle. Lower the thermostat so that there is no longer a call for heat for 1 -20 seconds then reset to previous setting.

NOTE: If the condition which originally caused the lockout still exists, the control will return to lockout. Refer to the *Diagnostic Chart* for aid in determining the cause.

Combustion Quality

Combustion quality can be affected by several factors. Major factors are venting and draining.

Venting

The venting system should be planned and installed with the following in mind;

- Should not be longer than necessary
- Use 45°elbows rather than 90° elbows when possible
- Must not sag or otherwise trap condensate
- Use longest radius fittings possible
- If using 3" venting, make the transition from 2" to 3" as close as practically possible
- Make sure there is no flue gas recirculation into the combustion air pipe

Condensate Drainage

Furnace combustion can be affected if a furnace is holding condensate. Check for proper connections of drain hoses, make sure furnace condensate trap is clean. Make sure furnace is not improperly sloped. Make sure air conditioning coil drain is not interfering with furnace drain.

Other Causes

1. Manifold Gas Pressure must be set for the gas being used, Natural or L.P., high and low firing rates. If converted to L.P. gas, check size of all orifices
2. Remove Draft Inducer, Check the integrity of the gasket between the inducer and the collector box cover, any air leak here will have a negative effect on combustion. Check the orifice hole in the collector box, it must be free of burrs on both sides
3. Make sure burners are clean, not out of position and line up correctly with exchanger tubes, including the heat exchanger orifice plate between the burners and the heat exchanger tubes, make sure it is not loose, missing a screw or hanging down between the burners and heat exchangers causing flame impingement.
4. Make sure the field installed gas line is not binding and causing distortion of burner assembly
5. If the furnace is installed as a one pipe system; make sure the surrounding area and structure are adequate to provide combustion air
6. Make sure there are no cabinet air leaks allowing supply air to affect combustion
7. If heat exchanger integrity is uncertain, follow procedures in Service Bulletin SF-041

SERVICING

Some of the electronic boards being used today, with flame rectification, will not function properly and/or at all without polarization of incoming power. Some also require phasing between the primary and secondary sides of step-down transformers.

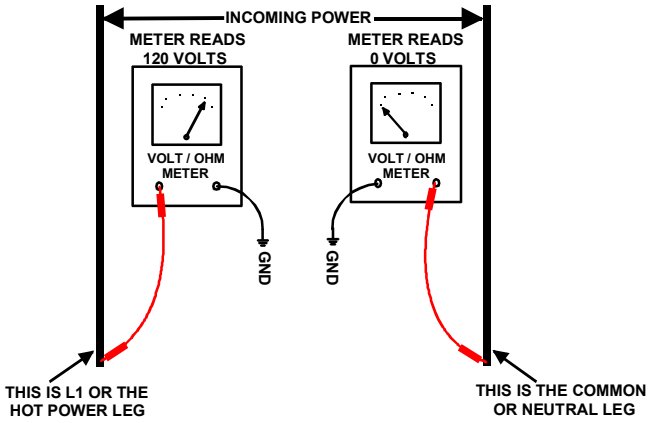

CHECKING FOR PHASING - PRIMARY TO SECONDARY OF UNMARKED TRANSFORMERS*

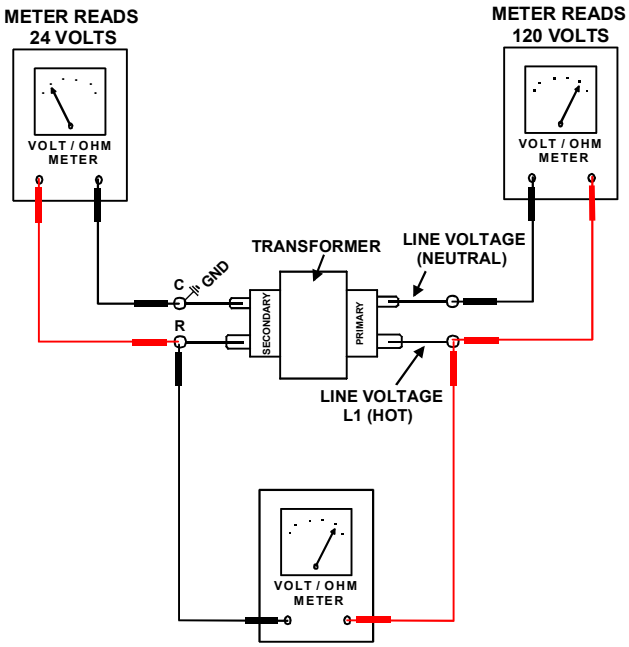

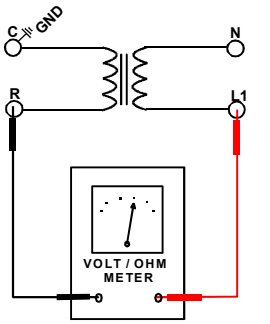

READS 96 VOLTS - IN PHASE

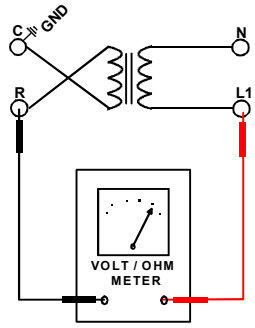

READS 144 VOLTS - OUT OF PHASE

If meter reads approximately 96 volts - the primary to secondary are in phase - if reads approximately 144 volts out of phase - reverse low voltage wires.

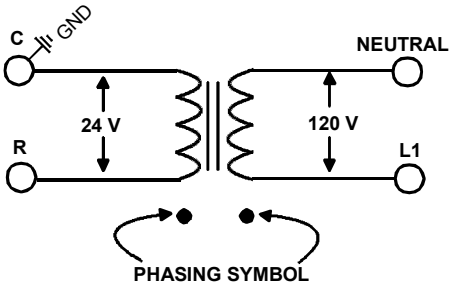

These then should be wired to the furnace accordingly.

Some transformers will display phasing symbols as shown in the illustration to the left to assist in determining proper transformer phasing.

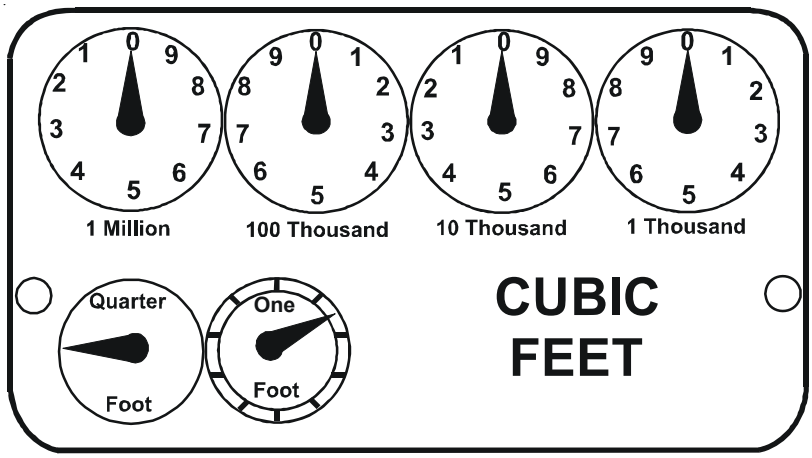

GAS RATE -- CUBIC FEET PER HOUR											
Seconds for One Revolution	Size of Test Dial					Seconds for One Revolution	Size of Test Dial				
	1/4 cu/ft	1/2 cu/ft	1 cu/ft	2 cu/ft	5 cu/ft		1/4 cu/ft	1/2 cu/ft	1 cu/ft	2 cu/ft	5 cu/ft
10	90	180	360	720	1800	**36**	25	50	100	200	500
11	82	164	327	655	1636	**37**	–	--	97	195	486
12	75	150	300	600	1500	**38**	23	47	95	189	474
13	69	138	277	555	1385	**39**	–	--	92	185	462
14	64	129	257	514	1286	**40**	22	45	90	180	450
15	60	120	240	480	1200	**41**	–	--	--	176	439
16	56	113	225	450	1125	**42**	21	43	86	172	429
17	53	106	212	424	1059	**43**	–	--	--	167	419
18	50	100	200	400	1000	**44**	–	41	82	164	409
19	47	95	189	379	947	**45**	20	40	80	160	400
20	45	90	180	360	900	**46**	–	--	78	157	391
21	43	86	171	343	857	**47**	19	38	76	153	383
22	41	82	164	327	818	**48**	–	--	75	150	375
23	39	78	157	313	783	**49**	–	--	--	147	367
24	37	75	150	300	750	**50**	18	36	72	144	360
25	36	72	144	288	720	**51**	–	--	--	141	355
26	34	69	138	277	692	**52**	–	--	69	138	346
27	33	67	133	265	667	**53**	17	34	--	136	340
28	32	64	129	257	643	**54**	–	--	67	133	333
29	31	62	124	248	621	**55**	–	--	--	131	327
30	30	60	120	240	600	**56**	16	32	64	129	321
31	–	--	116	232	581	**57**	–	--	--	126	316
32	28	56	113	225	563	**58**	–	31	62	124	310
33	–	--	109	218	545	**59**	–	--	--	122	305
34	26	53	106	212	529	**60**	15	30	60	120	300
35	–	--	103	206	514						

SERVICING

Service Problem	No Heat			Unsatisfactory Heat						Test Method Remedy	See Service Procedure Reference
POSSIBLE CAUSE DOTS IN ANALYSIS GUIDE INDICATE "POSSIBLE CAUSE" SYMPTOM	System Will Not Start	Burner Won't Ignite	Burner Ignites-Locks Out	Burner Shuts Off prior to T'Stat being Satisfied	Short Cycles	Long Cycles	Soot and /or Fumes	Too Much Heat	Not Enough Heat		
Power Failure	●									Test Voltage	S-1
Blown Fuse	●									Test Voltage	S-4
Loose Connection	●									Check Wiring	S-2
Shorted or Broken Wires	●									Check Wiring	S-3A
No Low Voltage	●									Check Transformer	S-4
Faulty Thermostat	●				●	●		●	●	Check Thermostat	S-3A
Faulty Transformer	●									Check Transformer	S-4
Poor or High Resistance Ground			●							Measure Ground Resistance	S-17B
Improper Heat Anticipator Setting					●	●		●	●	Adjust Heat Anticipator Setting	S-3B
Improper Thermostat Location					●	●		●	●	Relocate Thermostat	S-316
Faulty Limit or Roll Out Switch		●		●						Test Control	S-300 / S-302
Faulty Flame Sensor			●							Test Flame Sensor	S-314
Faulty Ignition Control	●	●	●							Test Control	S-313
Gas Valve or Gas Supply Shut Off		●								Turn Valves to On Position	S-317
Faulty Induced Draft Blower		●					●			Test Induced Draft Motor	S-303
Faulty Blower Motor (ECM)		●		●						Test Blower Motor (& ECM)	S-16A,B,C
Broken or Shorted Ignitor		●								Test Ignitor	S-308
Dirty Flame Sensor, Low UA			●							Clean Flame Sensor	S-314
Stuck Gas Valve		●					●	●		Replace Gas Valve	S-304
Faulty Gas Valve		●					●		●	Replace Gas Valve	S-304
Open Auxiliary Limit		●		●						Reset Control	S-301
Improper Air Flow or Distribution				●					●	Check Duct Static	S-200
Cycling on Limit				●	●				●	Check Controls & Temperature Rise	S-201 / S-300
Delayed Ignition							●			Test for Delayed Ignition	S-312
Flashback							●			Test for Flashback	S-309 / S-311
Orifice Size							●	●	●	Check Orifices	S-306 / S-311
Gas Pressure		●					●	●	●	Check Gas Pressure	S-307
Cracked Heat Exchanger							●			Check Burner Flames	S-305
Furnace Undersized						●			●	Replace with Proper Size Furnace	S-318
Furnace Oversized					●					Replace with Proper Size Furnace	S-318
Faulty Pressure Switch		●	●	●						Test Pressure Switch	S-310
Blocked or Restricted Flue							●			Check Flue/Drawdown Pressure	S-310
Open Roll Out Switch		●	●							Test Flame Roll Out Control	S-302
Bouncing On Pressure Switch			●							Test Negative Pressure	S-310

SERVICING

SERVICE NUMBERS

S-1 CHECKING VOLTAGE 76
S-2 CHECKING WIRING 76
CHECKING THERMOSTAT, WIRING AND ANTICIPATOR 76
S-3A THERMOSTAT AND WIRING 76
S-3B HEATING ANTICIPATOR 76
S-4 CHECKING TRANSFORMER AND CONTROL CIRCUIT 77
S-200 CHECKING DUCT STATIC 80
S-201 CHECKING TEMPERATURE RISE 80
S-300 CHECKING PRIMARY LIMIT CONTROL 81
S-301 CHECKING AUXILIARY LIMIT CONTROL 82
S-302 CHECKING FLAME ROLLOUT CONTROL 82
S-303 INDUCED DRAFT BLOWER MOTOR 83
S-304 CHECKING GAS VALVE (REDUNDANT) 83
S-305 CHECKING MAIN BURNERS 84
S-306 CHECKING ORIFICES 84
S-307 CHECKING GAS PRESSURE 84
S-308 CHECKING HOT SURFACE IGNITOR 86
S-309 CHECKING FOR FLASHBACK 87
S-310 CHECKING PRESSURE CONTROL 87
S-311 HIGH ALTITUDE APPLICATION (USA) 87
S-312 CHECKING FOR DELAYED IGNITION 88
S-313 CHECKING INTEGRATED IGNITION CONTROL BOARDS 88
S-313A MEMORY CHIPS 89
S-314 CHECKING FLAME SENSOR 89

SERVICING

S-1 CHECKING VOLTAGE

WARNING

HIGH VOLTAGE
DISCONNECT ALL POWER BEFORE SERVICING OR CHANGING ANY ELECTRICAL WIRING. MULTIPLE POWER SOURCES MAY BE PRESENT. FAILURE TO DO SO MAY CAUSE PROPERTY DAMAGE, PERSONAL INJURY OR DEATH.

1. Remove the burner door.
2. Remove cover from the Junction Box and gain access to incoming power lines.

With Power ON:

WARNING

LINE VOLTAGE NOW PRESENT

3. Using a voltmeter, measure the voltage across the hot and neutral connections.

NOTE: To energize the furnace, the Door Interlock Switch must be engaged at this point.

4. No reading - indicates open wiring, open fuse, no power, or faulty Door Interlock Switch from unit to fused disconnect service. Repair as needed.
5. With ample voltage at line voltage connectors, energize the furnace blower motor by jumpering terminals R to G on the integrated ignition control.
6. With the blower motor in operation, the voltage should be 115 volts ± 10 percent.
7. If the reading falls below the minimum voltage, check the line wire size. Long runs of undersized wire can cause low voltage. If wire size is adequate, notify the local power company of the condition.
8. After completing check and/or repair, replace Junction Box cover and reinstall the service panel doors.
9. Turn on electrical power and verify proper unit operation.

S-2 CHECKING WIRING

WARNING

DISCONNECT ALL POWER BEFORE SERVICING.

1. Check wiring visually for signs of overheating, damaged insulation and loose connections.
2. Use an ohmmeter to check continuity of any suspected open wires.
3. If any wires must be replaced, replace with AWM, 105°C. 2/64 thick insulation of the same gauge or its equivalent.

CHECKING THERMOSTAT, WIRING AND ANTICIPATOR

S-3A THERMOSTAT AND WIRING

WARNING

DISCONNECT ALL POWER BEFORE SERVICING.

1. Remove the blower compartment door to gain access to the thermostat low voltage wires located at the furnace integrated control module terminals.
2. Remove the thermostat low voltage wires at the furnace control panel terminal board.
3. Jumper terminals R to W (or W1 and W2 for two-stage models) on the integrated ignition control.

With Power On (and Door Interlock Switch closed):

WARNING

LINE VOLTAGE NOW PRESENT

4. Induced Draft Motor must run and pull in pressure switch.
5. If the hot surface ignitor heats and at the end of the ignitor warm-up period the gas valve opens and the burners ignite, the trouble is in the thermostat or wiring.
6. With power off, check the continuity of the thermostat and wiring. Repair or replace as necessary.

If checking the furnace in the air conditioning mode, proceed as follows.

7. With power off, Jumper terminals R to Y (or Y1 or Y2 for two-stage models) to G.
8. Turn on the power.
9. If the furnace blower motor starts and the condensing unit runs, then the trouble is in the thermostat or wiring. Repair or replace as necessary.
10. After completing check and/or repair of wiring and check and/or replacement of thermostat, reinstall blower compartment door.
11. Turn on electrical power and verify proper unit operation.

S-3B HEATING ANTICIPATOR

On older thermostats, the heating anticipator is a wire wound adjustable heater which is energized during the "ON" cycle to help prevent overheating of the conditioned space.

The anticipator is a part of the thermostat and if it should fail for any reason, the thermostat must be replaced.

The heating anticipator setting for furnaces covered in this manual is **0.70 Amps**.

Modern thermostats do not have this type of heat anticipator. Many have a selector switch to adjust the number of cycles per hour

SERVICING

S-4 CHECKING TRANSFORMER AND Control CIRCUIT

A step-down transformer 120 volt primary to 24 volt secondary, 40 VA (Heating and Cooling Models) supplies ample capacity of power for either operation.

WARNING

HIGH VOLTAGE
DISCONNECT ALL POWER BEFORE SERVICING OR CHANGING ANY ELECTRICAL WIRING. MULTIPLE POWER SOURCES MAY BE PRESENT. FAILURE TO DO SO MAY CAUSE PROPERTY DAMAGE, PERSONAL INJURY OR DEATH.

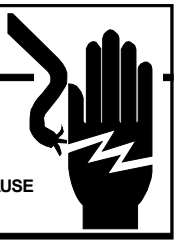

1. Remove blower compartment door to gain access to the thermostat low voltage wires located at the furnace integrated control module.
2. Remove the thermostat low voltage wires at the furnace integrated control module terminals.

With Power On (and Door Interlock Switch closed):

WARNING

LINE VOLTAGE NOW PRESENT

3. Use a voltmeter, check voltage across terminals R and C. Must read 24 VAC.
4. No voltage indicates faulty transformer, open fuse, bad wiring, bad splice, or open door interlock switch.
5. Check transformer primary voltage at incoming line voltage connections, fuse, splices, and blower door interlock switch.
6. If line voltage is available to the primary side of transformer and not at secondary side, the transformer is inoperative. Replace.
7. After completing check and/or replacement of transformer and check and/or repair of control circuit, reinstall blower compartment door.
8. Turn on electrical power and verify proper unit operation.

4-Wire ECM Motors

Description

These models utilize an Nidec US motors, 4-wire variable speed ECM blower motor. The ECM blower motor provides constant CFM.

The motor is a serially communicating variable speed motor. Only four wires are required to control the motor: +Vdc, Common, Receive, and Transmit.

The +Vdc and Common wires provide power to the motor's low voltage control circuits. Typical supply voltage is 9-15 volts DC.

ECM Control Connections

ECM control connections are made through the integrated ignition control. No other control connections are needed.

NOTE: An inductor *(Factor Power Choke Correction)* is required when powering the 3/4 and 1 horsepower motors with 115 volts (inductor pictured below). The operation of this inductor is to reduce the line current by storing the electrical energy in a magnetic field, such that the voltage AC waveform leads the current AC waveform. In other words, the inductor reduces line current which extends the life of the 3/4 and 1 horsepower motors.

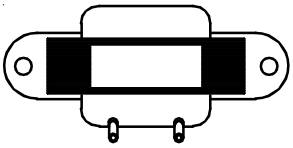

IMPORTANT: If the inductor fails, there will be no motor operation since this is the "LINE" power supply, black wire, from the integrated ignition control to the motor. To determine if the inductor is at fault, you can bypass by the inductor by disconnecting the black wire from the inductor and connecting it directly to the motor. If the motor operates then the inductor will need to be replaced.

Checking ECM Motors

ECMmotors connect directly to the AC Line Voltage. **DO NOT** insert contactors in series with the ECM Motor AC Line. The control is powered continuously to insure reliable start-up. The connector plug is polarized, verify and reverify correct connector orientation before applying power. **DO NOT** force plug into motor and make sure power is off before inserting power connector. **DO NOT** apply voltage to terminals 1 or 2.

General Checks/Considerations

1. Check power supply to the furnace. Ensure power supply is within the range specified on rating plate. See section S-1.
2. Check motor power harness. Ensure wires are continuous and make good contact when seated in the connectors. Repair or replace as needed.
3. Check motor control harness. Ensure wires are continuous and make good contact when seated in the connectors. Repair or replace as needed.
4. Check thermostat and thermostat wiring. Ensure thermostat is providing proper cooling/heating/continuous fan demands. Repair or replace as needed.
5. Check blower wheel. Confirm wheel is properly seated on motor shaft. Set screw must be on shaft flat and torqued to 165 in-lbs minimum. Confirm wheel has no broken or loose blades. Repair or replace as needed.
6. Ensure motor and wheel turn freely. Check for interference between wheel and housing or wheel and motor. Repair or replace as needed.

7. Check housing for cracks and/or corrosion. Repair or replace as needed.
8. Check motor mounting bracket. Ensure mouting bracket is tightly secured to the housing. Ensure bracket is not cracked or broken.

UltraCheck-EZ™ Diagnostic Tool

The UltraCheck-EZ™ diaganostic tool is the preferred method (part # UTT-01) to diagnose the ECM motor.

WARNING

HIGH VOLTAGE!
Disconnect ALL power before servicing or installing. Multiple power sources may be present. Failure to do so may cause property damage, personal injury or death.

To use the diagnostic tool, perform the following steps:

1. Disconnect power to the furnace.
2. Disconnect the 4-circuit control harness from the motor.
3. Plug the 4-circuit connector from the diagnostic tool into the motor control connector.
4. Connect one alligator clip from the diagnostic tool to a ground source.
5. Connect the other alligator clip to a 24VAC source.

NOTE: The alligator clips are NOT polarized.

NOTE: The UltraCheck-EZ™ diagnostic tool is equipped with a nonreplaceable fuse. Connecting the tool to a source other than 24VAC could damage the tool and cause the fuse to open. Doing so will render the diagnostic tool inoperable.

6. Turn on power to the furnace.

WARNING

Line Voltage now present.

7. Depress the orange power button on the diagnostic tool to send a run signal to the motor. Allow up to 5 seconds for the motor to start.

NOTE: If the orange power button does not illuminate when depressed, the tool either has an open fuse or is not properly connected to a 24VAC source.

8. The green LED on the diagnostic tool will blink indicating communications between the tool and motor. See table below for indications of tool indicators and motor actions. Replace or repair as needed.

Power Button	Green LED	Motor Action	Indication(s)
OFF	OFF	Not Rotating	Confirm 24VAC to UltraCheck-EZ™ tool. If 24VAC is confirmed, diagnostic tool is inoperable.
ON	Blinking	Rotating	Motor and control/end bell are functioning properly.
ON	OFF	Rotating	Replace motor control/end bell.
ON	Blinking	Not Rotating	Check motor (see *Motor Checks* below).
ON	OFF	Not Rotating	Replace motor control/end bell; verify motor (see *Motor Checks* below).

9. Depress the orange power button to turn off motor.
10. Disconnect power. Disconnect diagnostic tool.
11. Reconnect the 4-wire harness from control board to motor.

Electrical Checks - High Voltage Power Circuits

WARNING

HIGH VOLTAGE!
Disconnect ALL power before servicing or installing. Multiple power sources may be present. Failure to do so may cause property damage, personal injury or death.

1. Disconnect power to the furnace.
2. Disconnect the 5-circuit power connector to the ECM motor.
3. Turn on power to the furnace.

WARNING

Line Voltage now present.

4. Measure voltage between pins 4 and 5 on the 5-circuit connector. Measured voltage should be the same as the supply voltage to the furnace.

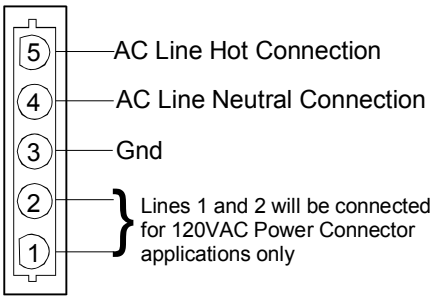

POWER CONNECTOR
(1/2 HP MOTORS)
"Motor Half"
(Viewed from Plug End)

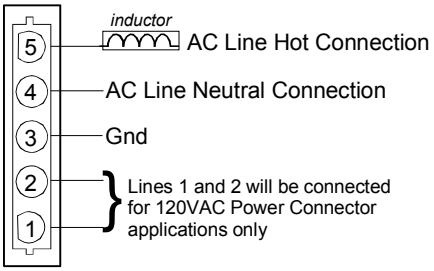

POWER CONNECTOR
(3/4 & 1 HP MOTORS)
"Motor Half"
(Viewed from Plug End)

5. Measure voltage between pins 4 and 3. Voltage should be approximately zero.
6. Measure voltage between pins 5 and 3. Voltage should be the same as the supply voltage to the furnace.
7. If no voltage is present, check supply voltage to the furnace. See section S-1.
8. Disconnect power to the furnace. Reconnect the 5-circuit power harness disconnected in step 2.

Electrical Checks - Low Voltage Control Circuits

1. Turn on power to the furnace.

WARNING

Line Voltage now present.

2. Check voltage between pins 1 and 4 on the 4-wire motor control harness between the motor and control board. Voltage should be between 3 and 15 VDC.
3. If no voltage is present, check control board. See section S-313.

Motor Control/End Bell Checks

WARNING

HIGH VOLTAGE!
Disconnect ALL power before servicing or installing. Multiple power sources may be present. Failure to do so may cause property damage, personal injury or death.

1. Disconnect power to the furnace.

   NOTE: Motor contains capacitors that can hold a charge for several minutes after disconnecting power. Wait 5 minutes after removing power to allow capacitors to discharge.
2. Disconnect the motor control harness and motor power harness.
3. Remove the blower assembly from the furnace.
4. Remove the (3) screws securing the control/end bell to the motor. Separate the control/end bell. Disconnect the 3-circuit harness from the control/end bell to remove the control/end bell from the motor.
5. Inspect the NTC thermistor inside the control/end bell (see figure below). Replace control/end bell if thermistor is cracked or broken.

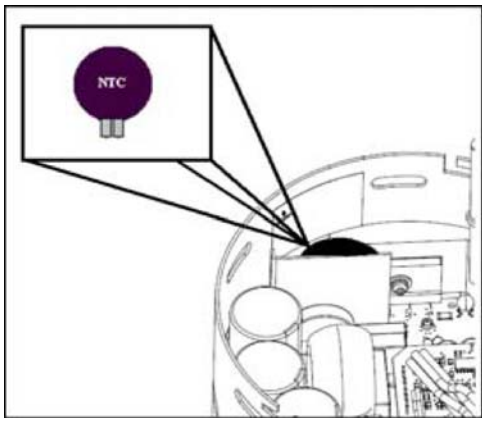

6. Inspect the large capacitors inside the control/end bell (see figure below). Replace the control/end bell if any of the capacitors are bulging or swollen.

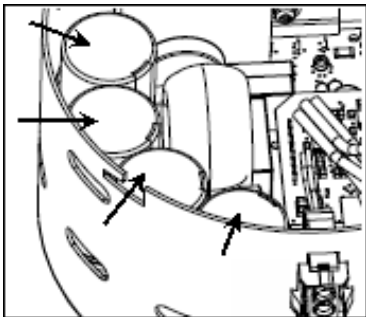

7. Locate the 3-circuit connector in the control/end bell. Using an ohmmeter, check the resistance between each terminal in the connector. If the resistance is 100kΩ or greater, the control/end bell is functioning properly. Replace the control/end bell if the resistance is lower than 100kΩ.
8. Reassemble motor and control/end bell in reverse of disassembly. Replace blower assembly into the furnace.

Motor Checks

WARNING

HIGH VOLTAGE!
Disconnect ALL power before servicing or installing. Multiple power sources may be present. Failure to do so may cause property damage, personal injury or death.

1. Disconnect power to the furnace.

   NOTE: Motor contains capacitors that can hold a charge for several minutes after disconnecting power. Wait 5 minutes after removing power to allow capacitors to discharge.
2. Disassemble motor as described in steps 2 through 4 above.
3. Locate the 3-circuit harness from the motor. Using an ohmmeter, measure the resistance between each motor phase winding. The resistance levels should be equal. Replace the motor if the resistance levels are unequal, open circuited or short circuited.
4. Measure the resistance between each motor phase winding and the motor shell. Replace the motor if any phase winding is short circuited to the motor shell.
5. Reassemble motor and control/end bell in reverse of disassembly. Replace blower assembly into the furnace.

S-200 CHECKING DUCT STATIC

The maximum and minimum allowable external static pressures are found in the specification section. These tables also show the amount of air being delivered at a given static by a given motor speed or pulley adjustment.

The furnace motor cannot deliver proper air quantities (CFM) against statics other than those listed.

Too great of an external static pressure will result in insufficient air that can cause excessive temperature rise, resulting in limit tripping, etc. Whereas not enough static may result in motor overloading.

To determine proper air movement, proceed as follows:

1. With clean filters in the furnace, use a draft gauge (inclined manometer) to measure the static pressure of the return duct at the inlet of the furnace. (Negative Pressure)
2. Measure the static pressure of the supply duct. (Positive Pressure)
3. Add the two (2) readings together for total external static pressure.

NOTE: Both readings may be taken simultaneously and read directly on the manometer if so desired. If an air conditioner coil or Electronic Air Cleaner is used in conjunction with the furnace, the readings must also include theses components, as shown in the following drawing.

4. Consult proper tables for the quantity of air.

If the total external static pressure exceeds the minimum or maximum allowable statics, check for closed dampers, registers, undersized and/or oversized poorly laid out duct work.

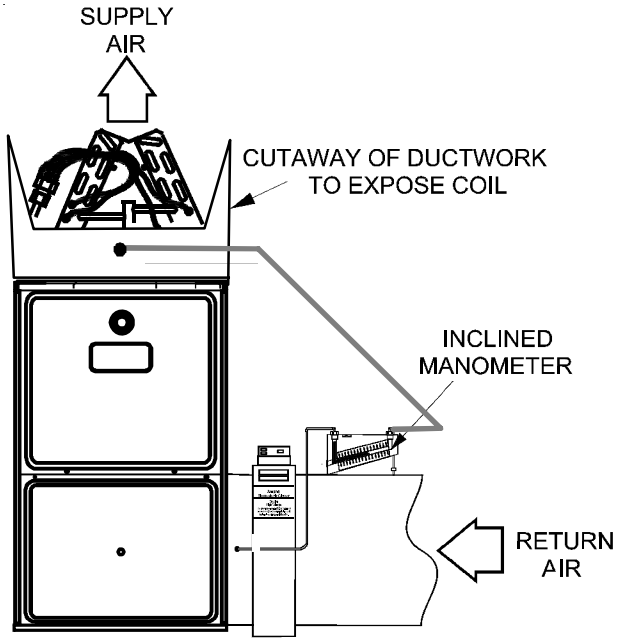

Checking Static Pressure

S-201 CHECKING TEMPERATURE RISE

The more air (CFM) being delivered through a given furnace, the less the rise will be; so the less air (CFM) being delivered, the greater the rise. The temperature rise should be adjusted in accordance to a given furnace specifications and its external static pressure. An incorrect temperature rise may result in condensing in or overheating of the heat exchanger. An airflow and temperature rise table is provided in the blower performance specification section. Determine and adjust temperature rise as follows:

SERVICING

1. Operate furnace with burners firing for approximately ten minutes. Check BTU input to furnace - do not exceed input rating stamped on rating plate. Ensure all registers are open and all duct dampers are in their final (fully or partially open) position.
2. Place thermometers in the return and supply ducts as close to the furnace as possible. Thermometers must not be influenced by radiant heat by being able to "see" the heat exchanger.

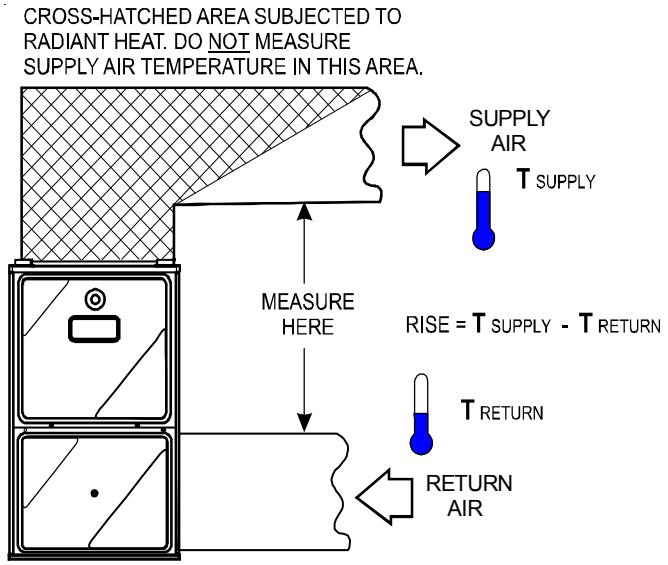

Temperature Rise Measurement

3. Subtract the return air temperature from the supply air temperature to determine the air temperature rise. Allow adequate time for thermometer readings to stabilize.
4. Adjust temperature rise by adjusting the circulator blower speed. Increase blower speed to reduce temperature rise. Decrease blower speed to increase temperature rise. Refer to *Circulator Blower Speed* section in the Product Design section of this manual for speed changing details. Temperature rise is related to the BTUH output of the furnace and the amount of air (CFM) circulated over the heat exchanger. Measure motor current draw to determine that the motor is not overloaded during adjustments.

S-300 CHECKING PRIMARY LIMIT CONTROL

Primary limit controls are nonadjustable, automatic reset, bimetal type limit control. Refer to the following drawing for the location of the primary limit.

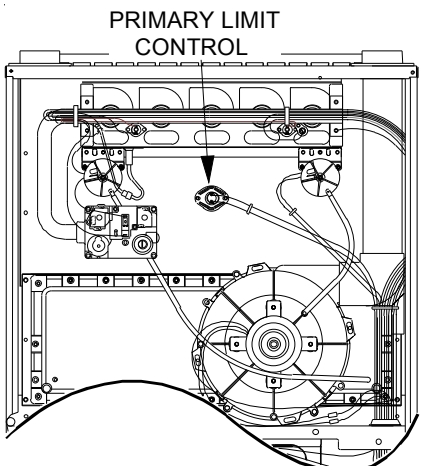

Primary Limit Control Location
(90% Upflow Furnace Shown, Counterflow Similar)

The following drawing illustrates the style of limit switches used on the 90% furnaces.

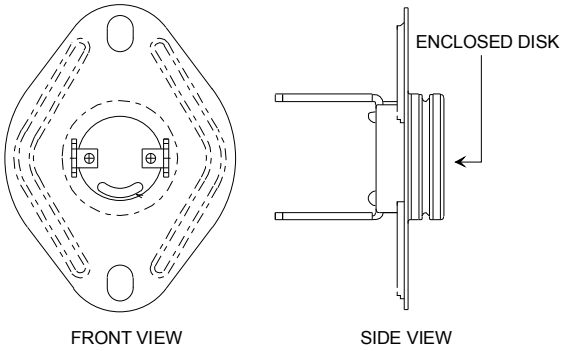

Primary Limit Control Style
(90% Furnaces)

WARNING

HIGH VOLTAGE
DISCONNECT ALL POWER BEFORE SERVICING OR CHANGING ANY ELECTRICAL WIRING. MULTIPLE POWER SOURCES MAY BE PRESENT. FAILURE TO DO SO MAY CAUSE PROPERTY DAMAGE, PERSONAL INJURY OR DEATH.

1. Remove burner compartment door to gain access to the primary limit.
2. Remove low voltage wires at limit control terminals.
3. With an ohmmeter, test between these two terminals as shown in the following drawing. The ohmmeter should read continuous unless heat exchanger temperature is above limit control setting. If not as above, replace the control.

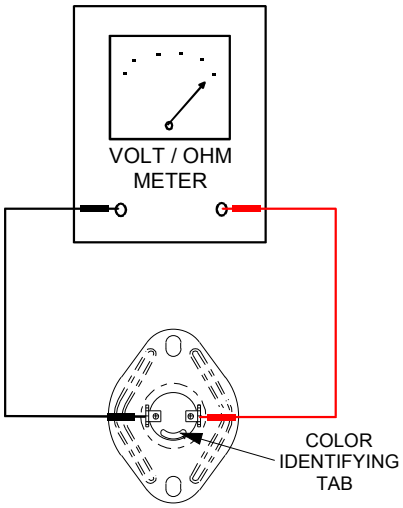

Testing Primary Limit Control (90% Furnaces)

4. After completing check and/or replacement of primary limit control, reinstall burner compartment door.
5. Turn on electrical power and verify proper unit operation.

To aid in identifying these controls, refer to the *Primary Limit Charts* in furnace Technical Manual for part number, temperature setting and color(s) code.

S-301 CHECKING AUXILIARY LIMIT CONTROL

The auxiliary limit control is designed to prevent furnace operation in case of main blower failure in horizontal or counterflow installations. It may also open if the power supply is interrupted while the furnace is firing.

The auxiliary limit control is suitable for both horizontal right and horizontal left installations. Regardless of airflow direction, it does not need to be relocated. The (2) two auxiliary limits are located on the blower housing (one on each side), as shown in the following illustration.

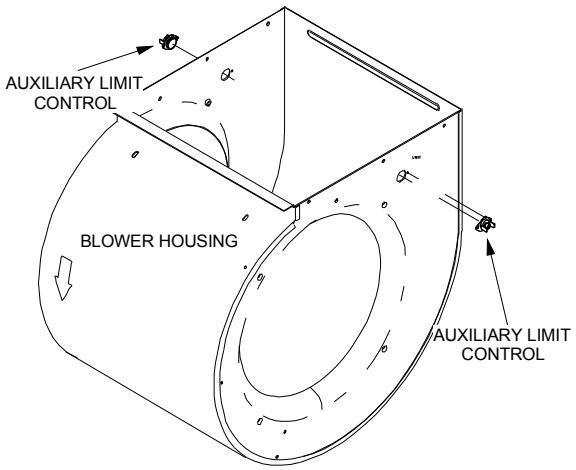

Auxiliary Limit Control Location (Select 90% / 95% Furnaces)

Manual or Automatic Reset Auxiliary Limits Located in Blower Side

WARNING

HIGH VOLTAGE
DISCONNECT ALL POWER BEFORE SERVICING OR INSTALLING THIS UNIT. MULTIPLE POWER SOURCES MAY BE PRESENT. FAILURE TO DO SO MAY CAUSE PROPERTY DAMAGE, PERSONAL INJURY OR DEATH.

1. Remove the wires from the auxiliary limit control terminals.
2. Using an ohmmeter, test for continuity across the two terminals (only test when the auxiliary limit is at room temperature).

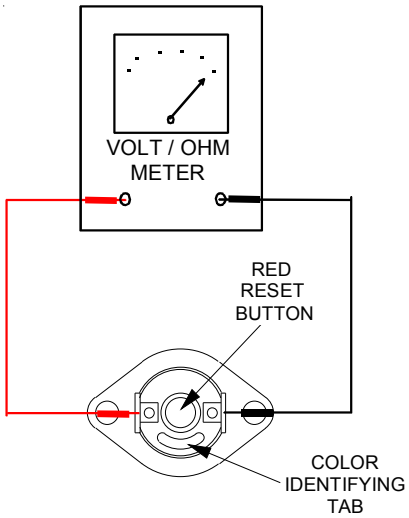

Testing Auxiliary Limit Control

WARNING

TO AVOID POSSIBLE FIRE, ONLY RESET THE AUXILIARY LIMIT CONTROL ONCE. IF IT SHOULD OPEN A SECOND TIME, A QUALIFIED SERVICER MUST DETERMINE WHY THE AUXILIARY LIMIT OPENED BEFORE RESETTING AGAIN.

S-302 CHECKING FLAME ROLLOUT CONTROL

A temperature activated manual reset control is mounted to the manifold assembly on 90% furnaces, as shown in the following illustration.

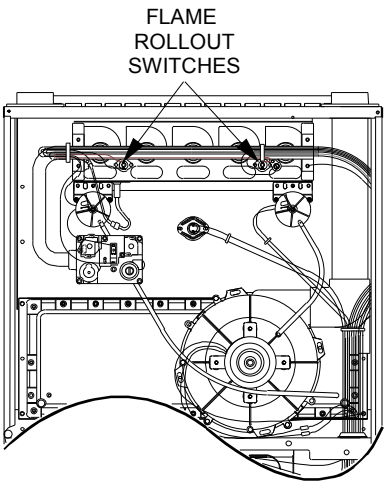

Flame Rollout Switch Location
(90% Upflow Furnace Shown, Counterflow Similar)

The control is designed to open should a flame roll out occur. An over firing condition or flame impingement on the heat shield may also cause the control to open. If the rollout control opens, the air circulation blower will run continuously.

⚠ WARNING

LINE VOLTAGE NOW PRESENT

1. Remove the burner compartment door to gain access to the rollout switch(es) mounted to burner bracket.
2. Reset the manual rollout switch.
3. Remove wires from rollout switch.
4. Using an ohmmeter, check for coninuity across the swtch.
5. if the switch will not close afer manually resetting, it must be replaced.

If a roll out switch has tripped, it is important to find out why. Possible causes could be flame impingement, orifice plate out of position, burners with excessive cross-over slot dimension, over-firing, improper orifices, improper gas pressure, air leaking from around the heat exchanger into the burner compartment, air leaking through the heat exchanger itself.

6. After check and/or replacement of rollout switch, reinstall burner compartment door and verify proper unit operation.

S-303 INDUCED DRAFT BLOWER Motor

⚠ WARNING

HIGH VOLTAGE
DISCONNECT ALL POWER BEFORE SERVICING OR INSTALLING THIS UNIT. MULTIPLE POWER SOURCES MAY BE PRESENT. FAILURE TO DO SO MAY CAUSE PROPERTY DAMAGE, PERSONAL INJURY OR DEATH.

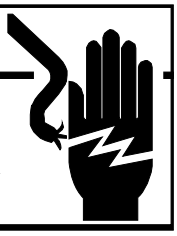

1. Remove burner compartment door to gain access to the induced draft blower motor.
2. Disconnect the motor wire leads from its connection point at the induced draft motor.
3. Using a ohmmeter, test for continuity between each of the motor leads.
4. Touch one probe of the ohmmeter to the motor frame (ground) and the other probe in turn to each lead.

   If the windings do not test continuous or a reading is obtained to ground, replace the motor.
5. If the windings have a continuity reading, reconnect wires. Turn power on to the furnace and turn the thermostat on in the heating mode. Check voltage for 115V at the induced draft motor terminals during the trial for ignition. If you have 115V and the motor does not run, replace the induced draft motor.
6. After completing check and/or replacement of induced draft motor, reinstall burner compartment door.
7. Turn on electrical power and verify proper unit operation.

S-304 CHECKING GAS VALVE (Redundant)

A combination redundant operator type gas valve which provides all manual and automatic control functions required for gas fired heating equipment is used.

The valve provides control of main burner gas flow, pressure regulation, and 100 percent safety shut-off.

Two stage gas valves always require 24 volts between common and low fire (main coil) to open. The furnace front cover pressure switch is wired in series with the low (main) solenoid of the gas valve. In the event of a non-functioning gas valve, always check the front cover pressure switch. Also see section S-307 on *Checking Gas Pressure* and section S-310 on *Checking Pressure Switches*.

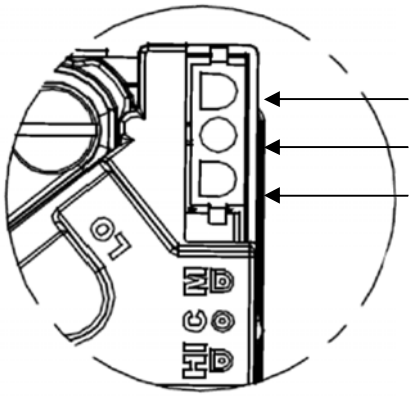

White-Rodgers 2-Stage Valve

⚠ WARNING

DISCONNECT ALL POWER BEFORE SERVICING

S-305 CHECKING MAIN BURNERS

The main burners are used to provide complete combustion of various fuels in a limited space, and transfer this heat of the burning process to the heat exchanger.

Proper ignition, combustion, and extinction are primarily due to burner design, orifice sizing, gas pressure, primary and secondary air, vent and proper seating of burners.

Burners

Burners have been redesigned for 34.5" chassis furnaces. Overall length and width dimensions remain the same as 40" model burners. The burners used 34.5" models have burner head insert with larger diameter center hole and a larger number of surrounding holes.

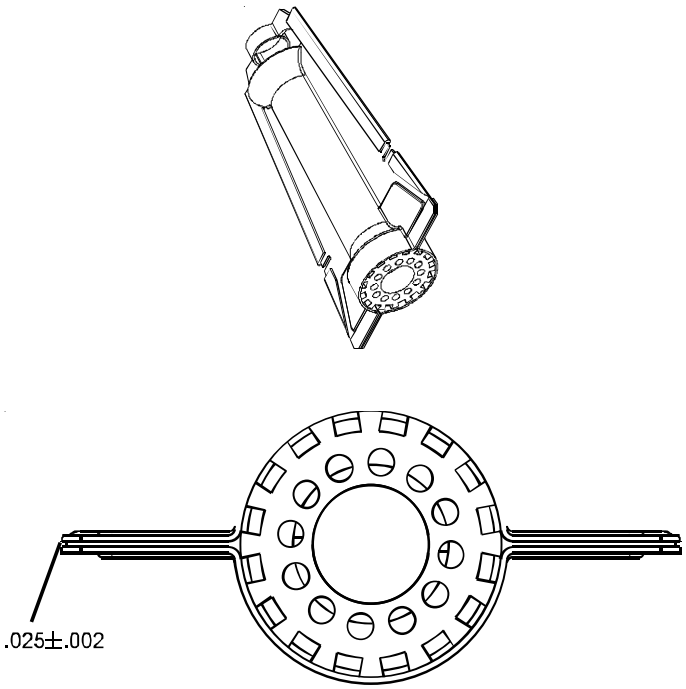

New 34.5 Burners

WARNING

Disconnect ALL Gas and Electrical Power Supply.

In checking main burners, look for signs of rust, oversized and undersized carry over ports restricted with foreign material, etc., burner cross-over slots should not be altered in size.

S-306 CHECKING ORIFICES

A/GMVC, A/GCVC model furnaces have factory installed #45 natural gas orifices.

The only time resizing is required is when a reduction in firing rate is required for an increase in altitude or a funace is being converted for use with L.P. gas.

Orifices should be treated with care in order to prevent damage. They should be removed and installed with a box-end wrench in order to prevent distortion. In no instance should an orifice be peened over and redrilled. This will change the angle or deflection of the vacuum effect or entraining of primary air, which will make it difficult to adjust the flame properly. This same problem can occur if an orifice spud of a different length is substituted.

WARNING

Disconnect ALL Gas and Electrical Power Supply.

1. Check orifice visually for distortion and/or burrs.
2. Check orifice size by the number stamped on the orifice.

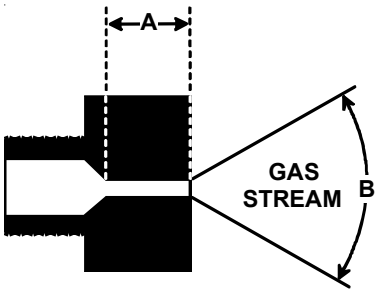

The length of Dimension "A" determines the angle of Gas Stream "B".

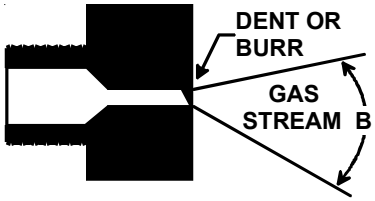

A dent or burr will cause a severe deflection of the gas stream.

S-307 CHECKING GAS PRESSURE

Gas Supply Pressure Measurement

CAUTION

To prevent unreliable operation or equipment damage, the inlet gas supply pressure must be as specified on the unit rating plate with all other household gas fired appliances operating.

Gas inlet and manifold pressures should be checked and adjusted in accordance to the type of fuel being consumed.

The line pressure supplied to the gas valve must be within the range specified below. The supply pressure can be measured at the gas valve inlet pressure tap or at a hose fitting installed in the gas piping drip leg. The supply pressure must be measured with the burners operating. To measure the gas supply pressure, use the following procedure.

SERVICING

WARNING

DISCONNECT ELECTRICAL POWER AND SHUT OFF GAS SUPPLY.

1. After turning off gas to furnace at the manual gas shutoff valve external to the furnace, remove burner compartment door to gain access to the gas valve.
2. Connect a calibrated water manometer (or appropriate gas pressure gauge) at either the gas valve inlet pressure tap or the gas piping drip leg as shown in the following figures.

NOTE: At either location, a hose fitting must be installed prior to making the hose connection.

NOTE: Use adapter kit #0151K00000S to measure gas pressure on White-Rodgers 36J54 gas valves.

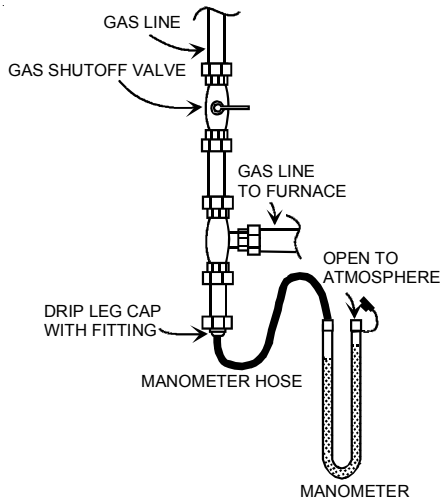

Measuring Inlet Gas Pressure (Alternate Method)

3. Turn ON the gas and electrical power supply and operate the furnace and all other gas consuming appliances on the same gas supply line.
4. Measure furnace gas supply pressure with burners firing. Supply pressure must be within the range specified in the following table.

INLET GAS SUPPLY PRESSURE		
Natural Gas	Minimum: 4.5" w.c.	Maximum: 10.0" w.c.
Propane Gas	Minimum: 11.0" w.c.	Maximum: 13.0" w.c.

If supply pressure differs from above, make necessary adjustments to pressure regulator, gas piping size, etc., and/or consult with local gas utility.

WARNING

HIGH VOLTAGE
DISCONNECT ALL ELECTRICAL POWER AND SHUT OFF GAS SUPPLY BEFORE SERVICING OR INSTALLING THIS UNIT. MULTIPLE POWER SOURCES MAY BE PRESENT. FAILURE TO DO SO MAY CAUSE PROPERTY DAMAGE, PERSONAL INJURY OR DEATH.

5. Disconnect manometer after turning off gas at manual shutoff valve. Reinstall plug before turning on gas to furnace.
6. Turn OFF any unnecessary gas appliances started in step 3.
7. Turn on gas to furnace and check for leaks. If leaks are found, repair and then reinstall burner compartment door.
8. Turn on electrical power and verify proper unit operation.

WARNING

HIGH VOLTAGE
DISCONNECT ALL ELECTRICAL POWER AND SHUT OFF GAS SUPPLY BEFORE SERVICING OR INSTALLING THIS UNIT. MULTIPLE POWER SOURCES MAY BE PRESENT. FAILURE TO DO SO MAY CAUSE PROPERTY DAMAGE, PERSONAL INJURY OR DEATH.

Gas Manifold Pressure Measurement and Adjustment
Natural Gas Adjustments

WARNING

HIGH VOLTAGE
DISCONNECT ALL ELECTRICAL POWER AND SHUT OFF GAS SUPPLY BEFORE SERVICING OR INSTALLING.

NOTE: Use apapter kit #0151K00000S to measure gas pressure on White-Rodgers 36J54 gas valves.

Only small variations in gas pressure should be made by adjusting the gas valve pressure regulator. The manifold pressure must be measured with the burners operating. To measure and adjust the manifold pressure, use the following procedure.

1. After turning off gas to furnace at the manual gas shutoff valve external to the furnace, remove burner compartment door to gain access to the gas valve.
2. Connect a calibrated water manometer (or appropriate gas pressure gauge) at the gas valve outlet pressure tap. Refer to *Measuring Gas Pressure: Two-Stage Valves* figure for two-stage gas valve outlet pressure tap connections.

WARNING

LINE VOLTAGE NOW PRESENT

3. Turn ON the gas and electrical power supply and operate the furnace.
4. White-Rodgers 36J54 Valves:
   a. Back outlet pressure test screw (inlet/outlet pressure boss) out one turn (counterclockwise, not more than one turn).
   b. Attach a hose and manometer to the outlet pressure outlet pressure boss.
   c. Turn ON the gas supply.
   d. Turn on power and close thermostat "R" and "W1" contacts to provide a call for low stage heat.
   e. Measure the gas manifold pressure with burners firing. Adjust manifold pressure using the *Manifold Gas Pressure* table shown on page 86.
   f. Remove regulator cover screw from the low (LO) outlet pressure regulator adjust tower and turn screw clockwise to increase pressure or counterclockwise to decrease pressure. Replace regulator cover screw.
   g. Close thermostat "R" and "W2" contacts to provide a call for high stage heat.
   h. Remove regulator cover screw from the high (HI) outlet pressure regulator adjust tower and turn screw clockwise to increase pressure or counterclockwise to decrease pressure. Replace regulator cover screw.
   i. Turn off all electrical power and gas supply to the system.
   j. Remove the manometer hose from the hose barb fitting or outlet pressure boss.
   k. Turn outlet pressure test screw in to seal pressure port (clockwise, 7 in-lb minimum).

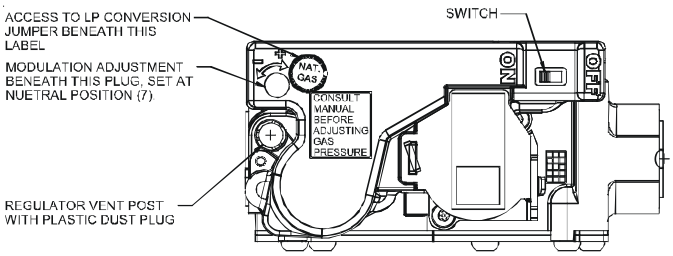

Measuring Manifold Gas Pressure (36J54 Valve)

WARNING

HIGH VOLTAGE
DISCONNECT ALL ELECTRICAL POWER AND SHUT OFF GAS SUPPLY BEFORE SERVICING OR INSTALLING.

Manifold Gas Pressure			
Gas	**Rate**	**Range**	**Nominal**
Natural Gas	High Stage	3.2 to 3.8" w.c.	3.5" w.c.
	Low Stage	1.6 to 2.2" w.c.	1.9" w.c.

WARNING

HIGH VOLTAGE
DISCONNECT ALL ELECTRICAL POWER AND SHUT OFF GAS SUPPLY BEFORE SERVICING OR INSTALLING THIS UNIT. MULTIPLE POWER SOURCES MAY BE PRESENT. FAILURE TO DO SO MAY CAUSE PROPERTY DAMAGE, PERSONAL INJURY OR DEATH.

WARNING

HIGH VOLTAGE
DISCONNECT ALL ELECTRICAL POWER AND SHUT OFF GAS SUPPLY BEFORE SERVICING OR INSTALLING.

Manifold Gas Pressure			
Gas	**Rate**	**Range**	**Nominal**
Propane Gas	High Stage	9.7 to 10.3" w.c.	10.0" w.c.
	Low Stage	5.7 to 6.3" w.c.	6.0" w.c.

S-308 CHECKING HOT SURFACE IGNITOR

120V Silicon Nitride Igniter - Amana® Brand and Goodman® Brand A/GMVC96 and A/GCVC96 furnaces use a 120V silicon nitride igniter for ignition. The normal operating temperature is approximately 2156°F - 2678°F.

WARNING

DISCONNECT ALL POWER BEFORE SERVICING.

1. Remove burner compartment door to gain access to the ignitor.
2. Ignitor cool - approximately 70 - 77°F.
3. Disconnect the ignitor from the Ignition Control.
4. Using an ohmmeter measure the resistance of the ignitor:
   120 Volt Silicon Nitride : 120V Nitride Igniter should read between 37 to 68 ohms.
5. Reconnect ignitor.

WARNING

LINE VOLTAGE NOW PRESENT

6. Place unit in heating cycle, measure current draw of ignitor during preheat cycle.

   The steady state current at 120V is 0.37 to 0.68 amps.
7. After checking and/or replacing of hot surface ignitor, reinstall burner compartment door and verify proper unit operation.

S-309 CHECKING FOR FLASHBACK

Flashback will also cause burning in the burner venturi, but is caused by the burning speed being greater than the gas-air flow velocity coming from a burner port.

Flashback may occur at the moment of ignition, after a burner heats up or when the burner turns off. The latter is known as extinction pop.

Since the end results of flashback and delayed ignition can be the same (burning in the burner venturi) a definite attempt should be made to determine which has occurred.

If flashback should occur, check for the following:

1. Improper gas pressure - adjust to proper pressure (See *S-307 CHECKING GAS PRESSURE*)..
2. Check burner for proper alignment and/or replace burner.
3. Improper orifice size - check orifice for obstruction.

S-310 CHECKING PRESSURE CONTROL

The pressure control is a safety device to prevent the combustion cycle from occurring with inadequate venting caused by a restricted or blocked vent pipe. In addition to the high fire and low fire pressure switches, A/GMVC96 and A/GCVC model furnaces have a "front cover pressure switch" wired in series with the gas valve. This pressure switch keeps the gas valve from opening in the event of condensate backing up in the secondary heat exchanger. This could occur from improperly connected drains or a plugged drain tube.

WARNING

HIGH VOLTAGE

DISCONNECT **ALL** POWER BEFORE SERVICING OR INSTALLING THIS UNIT. MULTIPLE POWER SOURCES MAY BE PRESENT. FAILURE TO DO SO MAY CAUSE PROPERTY DAMAGE, PERSONAL INJURY OR DEATH.

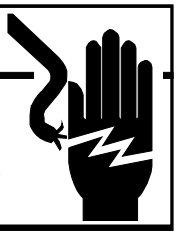

1. Remove burner compartment door to gain access to pressure switch(es).
2. Remove wires from the pressure switch(es) electrical terminals.
3. Remove the pressure control hose from the control and interconnect with an inclined manometer as shown in the following figure.
4. With an ohm meter connected across the pressure switch terminals and with the inducer running, the switch should close and the ohm meter should show a complete circuit across the pressure switch. If the switch is not closed, compare the negative pressure to the closing point specified for the particular switch. Either the switch is defective or the inducer/venting system is inadequate.

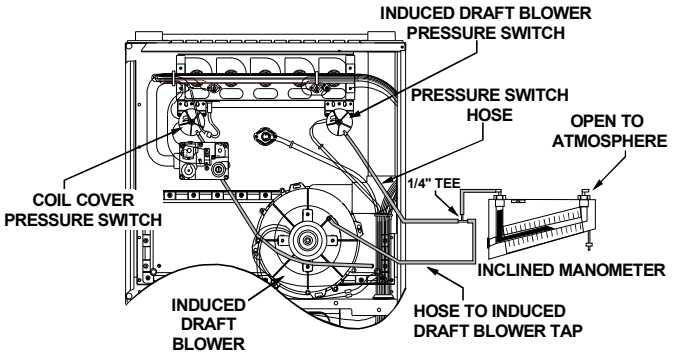

Blower Pressure Switch Negative Pressure Measurement (90% Upflow Furnace Shown, Counterflow Similar)

S-311 HIGH ALTITUDE APPLICATION (USA)

When furnaces are installed at high altitude, the appropriate High Altitude Orifice or Pressure Switch Kit must be applied. This is required due to the natural reduction in the density of both the gas fuel and combustion air as altitude increases. The High Altitude Orifice Kit will provide the proper design certified input rate within the specified altitude range.

High Altitude Orifice or Pressure Switch Kits are purchased according to the installation altitude and usage of either natural or propane gas. Refer to the Technical Manual or product Specification Sheet for a tabular listing of appropriate altitude ranges and corresponding manufacturer's high altitude (Natural or Propane Gas) orifice or pressure switch kits.

Do **not** derate the furnace by adjusting the manifold pressure to a lower pressure than specified on the furnace rating plate. The combination of the lower air density and a lower manifold pressure will prohibit the burner orifice from drawing the proper amount of air into the burner. This may cause incomplete combustion, flashback, and possible yellow tipping.

In some areas the gas supplier may artificially derate the gas in an effort to compensate for the effects of altitude. If the gas is artificially derated the appropriate orfice size must be determined based on the BTU/ft^3 content of the derated gas and the altitude. Refer to the National Fuel Gas Code, NFPA 54/ANSI Z223.1, and information provided by the gas supplier to determine the proper orifice size.

S-312 CHECKING FOR DELAYED IGNITION

Delayed ignition is a delay in lighting a combustible mixture of gas and air which has accumulated in the combustion chamber.

When the mixture does ignite, it may explode and/or rollout causing burning in the burner venturi.

If delayed ignition should occur, the following should be checked. Furnace design makes this extremely unlikely unless safety controls have been by-passed or tampered with. Never by-pass or alter furnace controls.

1. Improper gas pressure - adjust to proper pressure (See *S-307 CHECKING GAS PRESSURE*).
2. Improper burner positioning - burners should be in locating slots, level front to rear and left to right.
3. Carry over (lighter tube or cross lighter) obstructed - clean.
4. Main burner orifice(s) deformed, or out of alignment to burner - replace.

S-313 CHECKING INTEGRATED IGNITION CONTROL BOARDS

NOTE: Failure to earth ground the furnace, reversing the neutral and hot wire connection to the line (polarity), or a high resistance connection in the neutral line may cause the control to lockout due to failure to sense flame.

WARNING

TO AVOID THE RISK OF ELECTRICAL SHOCK, WIRING TO THE UNIT MUST BE PROPERLY POLARIZED AND GROUNDED. DISCONNECT POWER BEFORE PERFORMING SERVICE LISTED BELOW.

The ground wire must run from the furnace all the way back to the electrical panel. Proper grounding can be confirmed by disconnecting the electrical power and measuring resistance between the neutral (white) connection and the burner closest to the flame sensor. Resistance should be less than 2 ohms.

The ignition control is a combination electronic and electromechanical device and is not field repairable. Complete unit must be replaced.

WARNING

LINE VOLTAGE NOW PRESENT

These tests must be completed within a given time frame due to the operation of the ignition control. The trial for ignition period is 4 seconds.

The ignition control is capable of diagnosing many furnace failures to help in troubleshooting. The control utilizes a dual, 7-segment LED display to indicate diagnostic codes.

When the control is powered up normally the light will be on continuously. The display wil indicate **"ON"** when powered and in standby mode. This can be used to test for 120 volts and 24 volts to the control since both must be present for the light to be on. If this step fails, check for 120 volts to the control and check the transformer and its associated wiring. If this step is successful give the control a call for heat and wait five (5) seconds or until the furnace goes into lockout. If the control detects a failure it will now be shown on the diagnostic indicator light/display. Refer to the *Abnormal Operation* section in the *Sequence of Operation* section of this manual for more detail on failure codes.

1. Check for 120 volts from Line 1 (Hot) to Line 2 (Neutral) at the ignition control. No voltage, check the door switch connections and wire harness for continuity.
2. With the thermostat calling for heat, check for 24 volts from W1 to C terminal on the ignition control. No voltage. Check transformer, room thermostat, and wiring.

   If you have 24 volts coming off the transformer but receive approximately 13 volts on the terminal board between (C) and (R), check for blown fuse.
3. Check for 120 volts to the induced draft blower (low-stage) by measuring voltage between Pin 3 and Pin 4 (on the 5-pin connector) located on circuit board. No voltage, check for loose connection in the 5-pin connector or replace ignition control.

   Check for 120 volts to the induced draft blower (high-stage) by measuring voltage between Pin 2 and Pin 4 (on the 5-pin connector) located on circuit board. No voltage, check for loose connection in the 5-pin connector, no call for high stage heat or replace ignition control.
4. If voltage is present in Steps 1 through 3 and the induced draft blower is operating, check for 120 volts to the ignitor during the preheat cycle. Measure voltage between Pin 1 and Pin 5 (on the 5-pin connector) located on ignition control. No voltage, check low stage and high stage pressure switches or replace the ignition control board.
5. After the ignitor warmup time, begin checking for 24 volts to the gas valve. Voltage will be present for seven seconds only if proof of flame has been established.
6. If proof of flame was established voltage will be provided to the air circulation blower following the heat on delay period.
   a. BEFORE replacing the ECM motor assembly or the end bell, first check the motor with a Goodman #UTT-01 UltraCheck-EZ™ diaganostic tool . If the motor runs with the diagnostic tool, the motor is good. To check the end bell, see the previous variable speed testing section of this manual before replacing the end bell.
   b. The two-stage variable speed furnaces should have 120 Volts at the motor at all times, even without a call for cooling or heating. These motors receive their operational signals through the 4-pin wiring harness, connected between the motor and integrated control board. **NOTE:** For complete troubleshooting information on units using the ECM blower motors, refer to the *servicing section - Checking Air Circulator Blowers (S-16B)* in this service manual.

SERVICING

S-313A MEMORY CHIPS

Memory chips are a service only item and are not sent out with new equipment. They are used only in the rare occurrence where communicating equipment shared data needs to be restored.

Memory chips should not be routinely installed at the time of installation. A memory chip is not required when an individual control board or motor is replaced.

A memory chip is only required when all communicating components have been replaced with service parts containing no shared data. If either an existing control board or ECM motor needed to be replaced, the service part would upload the necessary data from the remaining communicating component. In a fully communicating system, this would include the communicating thermostat and communicating outdoor unit control board as the necessary data is stored in all communicating devices.

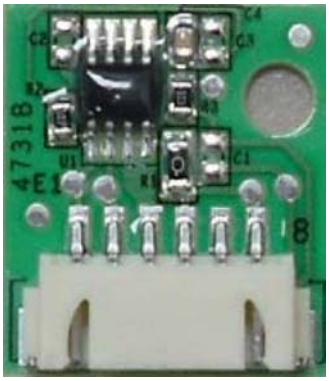

A furnace void of shared data will not function in a legacy or a fully communicating installation. The furnace display would show “d0” indicating that there is no shared data in the furnace control board. If it is ever necessary to use a memory chip, the specific memory chip for your furnace number must be used.

To use a memory chip;

1. Power down all HVAC equipment in the system.
2. As when handling any electronic components; discharge any static electricity you may be carrying by touching grounded metal.
3. Insert the memory card in the slot on the control board.
4. Power the system back up and allow a few minutes for the network to establish communication between all devices.
5. Furnace control board will display "ON”.
6. Check operation.
7. Memory chip can be left on the control board (recommended) or removed once equipment is powered down again.

S-314 CHECKING FLAME SENSOR

A flame sensing device is used in conjunction with the ignition control module to prove combustion. If proof of flame is not present the control will de-energize the gas valve and "retry" for ignition or lockout.

WARNING

HIGH VOLTAGE

DISCONNECT **ALL** POWER BEFORE SERVICING OR INSTALLING THIS UNIT. MULTIPLE POWER SOURCES MAY BE PRESENT. FAILURE TO DO SO MAY CAUSE PROPERTY DAMAGE, PERSONAL INJURY OR DEATH.

1. Disconnect the flame sensor wire from the sensor.
2. Connect a micro-amp meter in series with this wire and the sensor terminal.
3. Be sure the positive side of the meter is to the flame sensor wire and the negative side of the meter is to sensor terminal.

WARNING

LINE VOLTAGE NOW PRESENT

4. Place the unit into a heating cycle.
5. As soon as flame is established a micro-amp reading should be evident once proof of flame (micro-amp reading) is established, the hot surface ignitor will be de-energized.
6. The Integrated Ignition controls will have 1 to 4 micro-amps. If the micro-amp reading is less than the minimum specified, check for high resistance wiring connections, sensor to burner gap, dirty flame sensor, or poor grounding.
7. If absolutely no reading, check for continuity on all components and if good - replace ignition control module.

NOTE: Contaminated fuel or combustion air can create a nearly invisible coating on the flame sensor. This coating works as an insulator causing a loss in the flame sense signal. If this situation occurs the flame sensor must be cleaned with steel wool.

MAINTENANCE

WARNING

HIGH VOLTAGE
DISCONNECT ALL POWER BEFORE SERVICING OR INSTALLING THIS UNIT. MULTIPLE POWER SOURCES MAY BE PRESENT. FAILURE TO DO SO MAY CAUSE PROPERTY DAMAGE, PERSONAL INJURY OR DEATH.

CAUTION

IF YOU MUST HANDLE THE ITNITOR, HANDLE WITH CARE. TOUCHING THE IGNITOR BODY WITH BARE FINGERS, ROUGH HANDLING, OR VIBRATION COULD RESULT IN EARLY IGNITOR FAILURE. ONLY A QUALIFIED SERVICER SHOULD EVER HANDLE THE IGNITOR.

ANNUAL INSPECTION

The furnace should be inspected by a qualified installer, or service agency at least once per year. This check should be performed at the beginning of the heating season. This will ensure that all furnace components are in proper working order and that the heating system functions appropriately. Pay particular attention to the following items. Repair or service as necessary.

- Flue pipe system. Check for blockage and/or leakage. Check the outside termination and the connections at the furnace.
- Combustion air intake pipe system (where applicable). Check for blockage and/or leakage. Check the outside termination and the connection at the furnace.
- Heat exchanger. Check for corrosion and/or buildup within the heat exchanger passageways.
- Burners. Check for proper ignition, burner flame, and flame sense.
- Drainage system. Check for blockage and/or leakage. Check hose connections at and internal to furnace.
- Wiring. Check electrical connections for tightness and/or corrosion. Check wires for damage.
- Filters.

AIR FILTER

WARNING

NEVER OPERATE FURNACE WIHTOUT A FILTER INSTALLED AS DUST AND LINT WILL BUILD UP ON INTERNAL PARTS RESULTING IN LOSS OF EFFICIENCY, EQUIPMENT DAMAMGE, AND POSSIBLE FIRE.

Filters must be used with this furnace. Filters do not ship with these furnaces but must be provided by the installer for proper furnace operation.

Remember that dirty filters are the most common cause of inadequate heating or cooling performance.

WARNING

HIGH VOLTAGE
DISCONNECT ALL POWER BEFORE SERVICING, REMOVING THE FILTER OR PREFORING ANY OTHER MAINTENEACE. MULTIPLE POWER SOURCES MAY BE PRESENT. FAILURE TO DO SO MAY CAUSE PROPERTY DAMAGE, PERSONAL INJURY OR DEATH.

Maintenance

Improper filter maintenance is the most common cause of inadequate heating or cooling performance. Filters should be cleaned (permanent) or replaced (disposable) every two months or as required. It is the owner's responsibility to keep air filters clean. When replacing a filter, it must be replaced with a filter of the same type and size.

Filter Removal

Depending on the installation, differing filter arrangements can be applied. Filters can be installed in the central return register, the bottom of the blower compartment (upflow only), a side panel external filter rack kit (upflow only), or the ductwork above a counterflow furnace. A media air filter or electronic air cleaner can be used as an alternate filter. The filter sizes given in the *Product Design* section of this manual or the product *Specification Sheet* must be followed to ensure proper unit performance. Refer to the following information for removal and installation of filters.

FILTER REMOVAL PROCEDURE

Media Air Filter or Electronic Air Cleaner Removal

Follow the manufacturer's directions for service.

Upright Counterflow Filter Removal

To remove filters from the ductwork above an upright counterflow installation:

1. Turn off electrical power to furnace.
2. Remove access door in ductwork above furnace.
3. Remove filters.
4. Remove blower compartment door. Vacuum compartment. Replace blower compartment door.
5. Replace filters opposite of removal.
6. Replace access door in ductwork.

Horizontal Unit Filter Removal

Filters in horizontal installations are located in the central return register.

INDUCED DRAFT AND CIRCULATION BLOWERS

The bearings in the induced draft blower and circulator blower motors are permanently lubricated by the manufacturer. No further lubrication is required. Check motor windings for accumulation of dust which may cause overheating. Clean as necessary.

MAINTENANCE

CONDENSATE DRAINAGE SYSTEM (QUALIFIED SERVICER ONLY)

The drain tubes, trap, and field supplied drain line must be checked annually and cleaned as often as necessary to ensure proper condensate drainage.

FLAME SENSOR (QUALIFIED SERVICER ONLY)

Under some conditions, the fuel or air supply can create a nearly invisible coating on the flame sensor. This coating acts as an insulator, causing a drop in the flame sensing signal. If this occurs, a qualified servicer must carefully clean the flame sensor with steel wool. After cleaning, the flame sensor output should be as listed on the specification sheet.

BURNERS

WARNING

HIGH VOLTAGE

ELECTRICAL COMPONENTS ARE CONTAINED IN BOTH COMPARTMENTS. TO AVOID ELECTRICAL SHOCK, INJURY OR DEATH, DO NOT REMOVE ANY INTERNAL COMPARTMENT COVERS OR ATTEMPT ANY ADJUSTMENT. CONTACT A QUALIFIED SERVICE AGENT AT ONCE IF AN ABNORMAL FLAME APPEARANCE SHOULD DEVELOP.

Periodically during the heating season make a visual check of the burner flames. Turn the furnace on at the thermostat. Wait a few minutes since any dislodged dust will alter the normal flame appearance. Flames should be stable, quiet, soft and blue with slightly orange tips. They should not be yellow. They should extend directly outward from the burner ports without curling downward, floating or lifting off the ports.

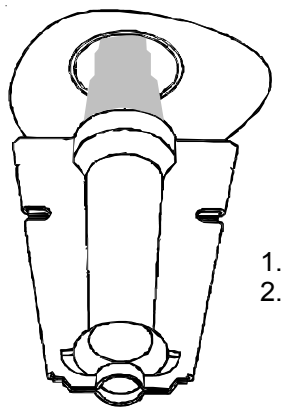

1. Stable, soft and blue.
2. Not curling, floating or lifting off.

Burner Flame

Proper equipment promotes faster, more efficient service and accurate repairs resulting in fewer call backs.

HEATING PERFORMANCE TEST

Before attempting to diagnose an operating fault, run a heating performance test and apply the results to the *Service Problem Analysis Guide.*

To conduct a heating performance test, the BTU input to the furnace must be calculated.

After the heating cycle has been in operation for at least fifteen minutes and with all other gas appliances turned off, the gas meter should be clocked.

To find the BTU input, multiply the number of cubic feet of gas consumed per hour by the heating value of the gas being used. (The calorific value of the gas being used is found by contacting your local utility.)

EXAMPLE: It is found by the gas meter, that it takes forty (40) seconds for the hand on the cubic foot dial to make one complete revolution, with all appliances off, except the furnace. Take this information and locate it on the gas rate chart. Observe the forty (40) seconds, locate and read across to the one (1) cubic foot dial column. There we find the number 90, which shows that ninety (90) cubic feet of gas will be consumed in one (1) hour.

Let's assume the local gas utility has stated that the calorific value of the gas is 1,025 BTU per cubic foot.

Multiplying the ninety (90) cubic feet by 1,025 BTU per cubic foot gives us an input of 92,250 BTUH.

Checking the BTU input on the rating plate of the furnace being tested.

EXAMPLE:

INPUT: 92,000 BTU/HR

OUTPUT CAP: 84,000

CAUTION

ALWAYS CONNECT A MONOMETER TO THE OUTLET TAP AT THE GAS VALVE BEFORE ADJUSTING THE PRESSURE REGULATOR. IN NO CASE SHOULD THE FINAL MANIFOLD PRESSURE VARY MORE THAN PLUS OR MINUS .3 INCHES WATER COLUMN FROM 3.5 INCHES WATER COLUMN FOR NATURAL GAS OR 10 INCHES WATER COLUMN FOR PROPANE GAS.

To adjust the pressure regulator on the gas valve, turn down (clockwise) to increase pressure and input, and out (counterclockwise) to decrease pressure and input.

The dissipation of the heat transferred to the heat exchanger is now controlled by the amount of air circulated over its surface.

The amount (CFM) of air circulated is governed by the external static pressure in inches of water column of duct work, cooling coil, registers, etc., applied externally to the unit versus the motor speed tap (direct drive) or pulley adjustments of the motor and blower (belt drive).

A properly operating unit must have the BTU per hour input and CFM of air, within the limits shown to prevent short cycling of the equipment. As the external static pressure goes up, the temperature rise will also increase. Consult the proper tables for temperature rise limitation.

ACCESSORY WIRING DIAGRAMS

WARNING

HIGH VOLTAGE!
DISCONNECT ALL POWER BEFORE SERVICING OR INSTALLING THIS UNIT. MULTIPLE POWER SOURCES MAY BE PRESENT. FAILURE TO DO SO MAY CAUSE PROPERTY DAMAGE, PERSONAL INJURY OR DEATH.

ALL FUEL SYSTEM CONTROL BOARD - AFE1860A

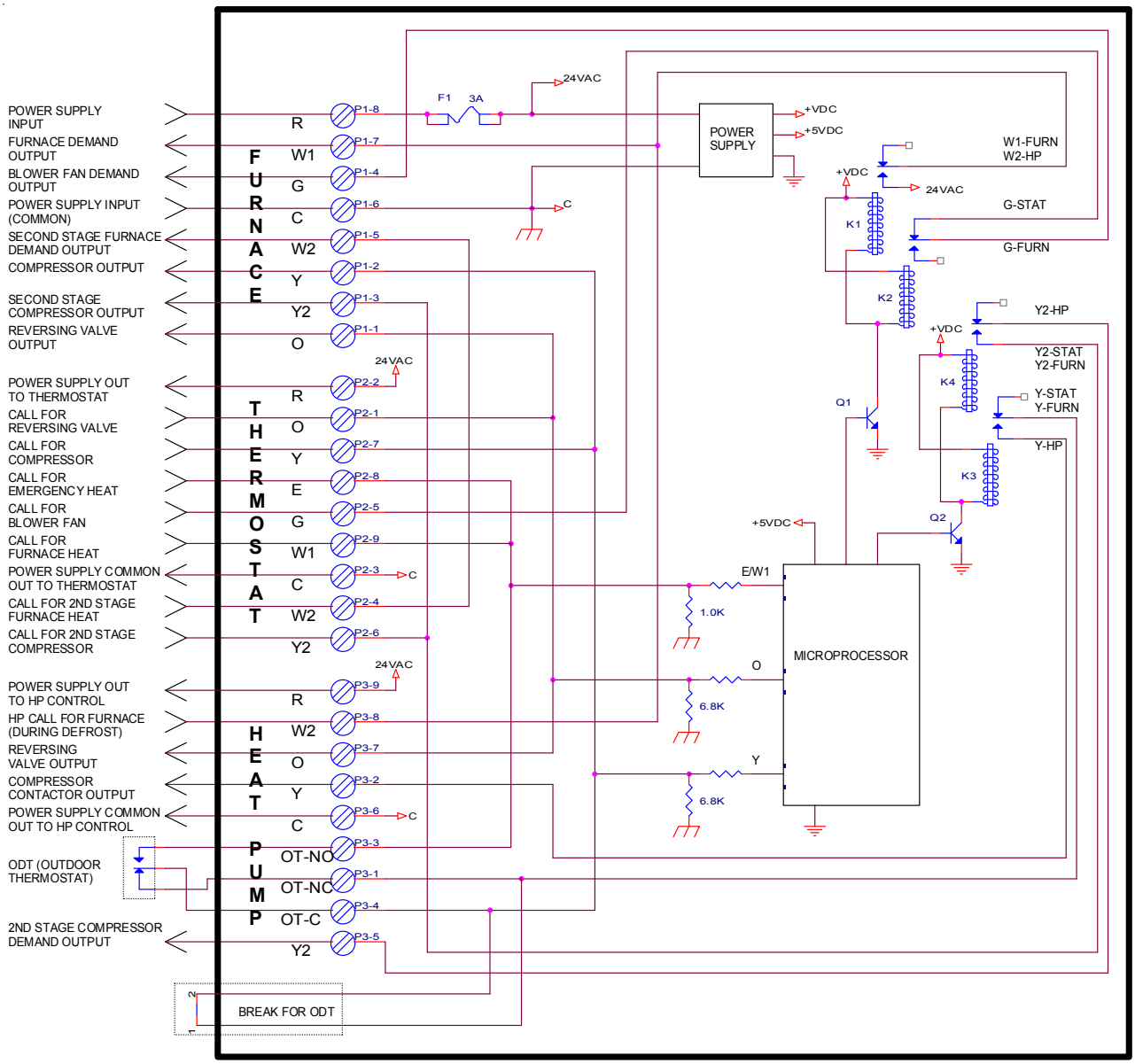

ALL FUEL SYSTEM CONTROL BOARD - AFE18-60A

This wiring diagram is for reference only. Not all wiring is as shown above.
Refer to the appropriate wiring diagram for the unit being serviced.
(For use with Heat Pumps in conjunction with 80% or 90% Single-Stage or Two-Stage Furnaces)

WIRING DIAGRAMS

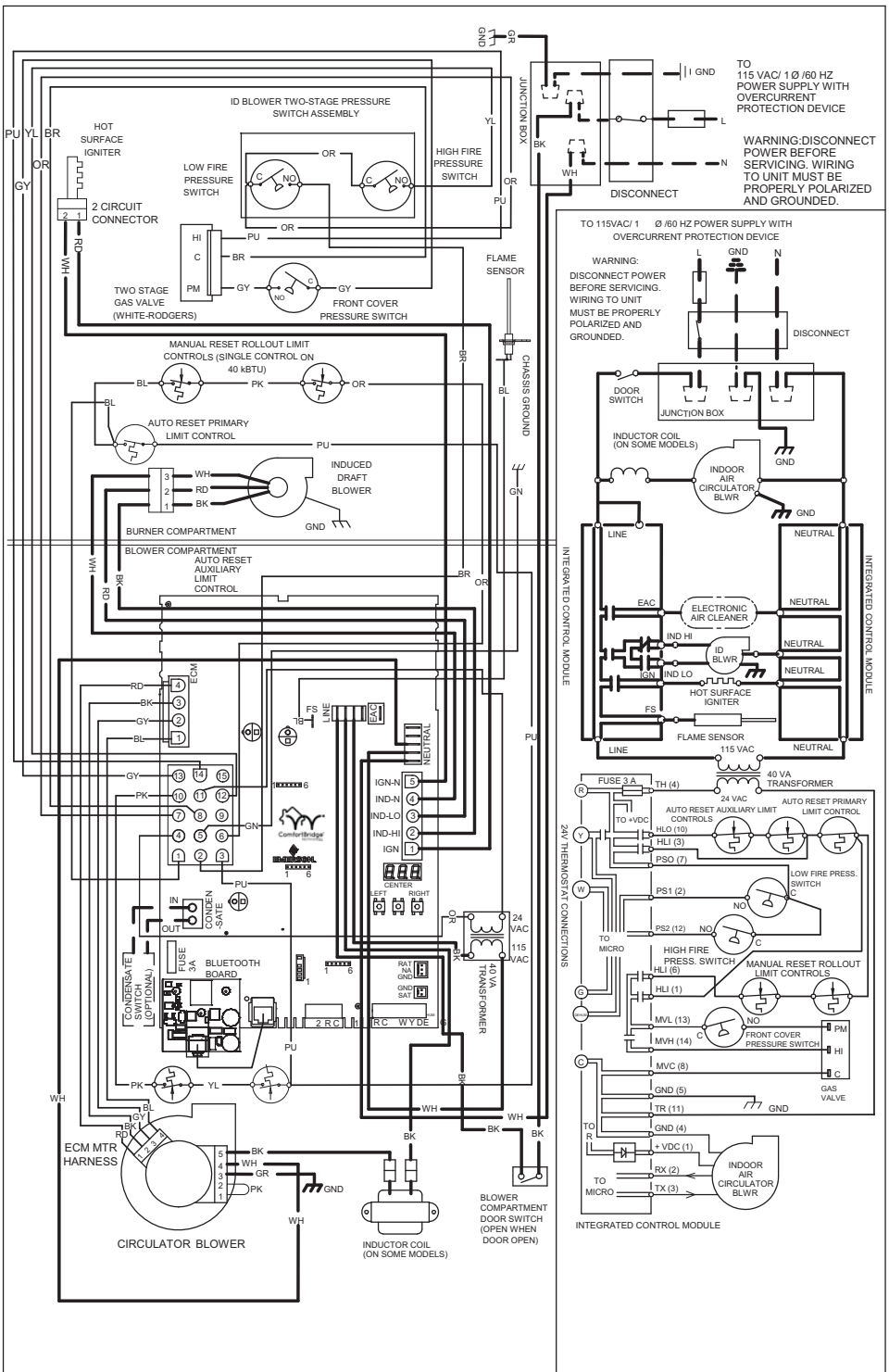

NOTES:

1. SET HEAT ANTICIPATOR ON ROOM THERMOSTAT AT 0.7 AMPS.
2. MANUFACTURER'S SPECIFIED REPLACEMENT PARTS MUST BE USED WHEN SERVICING.
3. IF ANY OF THE ORIGINAL WIRE AS SUPPLIED WITH THE FURNACE MUST BE REPLACED, IT MUST BE REPLACED WITH WIRING MATERIAL HAVING A TEMPERATURE RATING OF AT LEAST 105°C. USE COPPER CONDUCTORS ONLY.
4. UNIT MUST BE PERMANENTLY GROUNDED AND CONFORM TO N.E.C. AND LOCAL CODES.

COLOR CODES:
PK PINK
BR BROWN
WH WHITE
BL BLUE
GY GRAY
RD RED
YL YELLOW
OR ORANGE
PU PURPLE
GN GREEN
BK BLACK

LOW VOLTAGE (24V)
LOW VOLTAGE FIELD
HI VOLTAGE (115V)
HI VOLTAGE FIELD
JUNCTION
TERMINAL
INTERNAL TO INTEGRATED CONTROL
PLUG CONNECTION

EQUIPMENT GND
FIELD GND
FIELD SPLICE
SWITCH (TEMP.)
IGNITER
SWITCH (PRESS.)
OVERCURRENT PROT. DEVICE

0140F02404-C

Wiring is subject to change. Always refer to the wiring diagram on the unit for the most up-to-date wiring.