Service Instructions

Models listed on pages 4-6

80% GDT, GMP, GMPE, GMPH, GMPV, GMT, GMTH, GPD

90% GMNT, GMNTE, GMNV, GMPN, GSM, GSMS, GSU

This Forced Air Central Unit Design Complies With Requirements Embodied in The American National Standard / National Standard of Canada Shown Below.

ANSI Z21.47•CSA-2.3 Central Furnaces

Goodman®

This manual is to be used by qualified, professionally trained HVAC technicians only. Goodman does not assume any responsibility for property damage or personal injury due to improper service procedures or services performed by an unqualified person.

RS6610003
January 2007

Copyright © 2000-2007 Goodman Manufacturing Company, L.P.

TABLE OF CONTENTS

IMPORTANT INFORMATION 2-3
PRODUCT INFORMATION 4-12
SPECIFICATIONS 13-23
DIMENSIONS 24-27
MAINTENANCE 28
SERVICING 30-56
SERVICING TABLE OF CONTENTS 32
TROUBLESHOOTING 46
WIRING DIAGRAMS 58-77

IMPORTANT INFORMATION

Pride and workmanship go into every product to provide our customers with quality products. It is possible, however, that during its lifetime a product may require service. Products should be serviced only by a qualified service technician who is familiar with the safety procedures required in the repair and who is equipped with the proper tools, parts, testing instruments and the appropriate service manual. **REVIEW ALL SERVICE INFORMATION IN THE APPROPRIATE SERVICE MANUAL BEFORE BEGINNING REPAIRS.**

IMPORTANT NOTICES FOR CONSUMERS AND SERVICERS

RECOGNIZE SAFETY SYMBOLS, WORDS AND LABELS

WARNING

THIS UNIT SHOULD NOT BE CONNECTED TO, OR USED IN CONJUNCTION WITH, ANY DEVICES THAT ARE NOT DESIGN CERTIFIED FOR USE WITH THIS UNIT OR HAVE NOT BEEN TESTED AND APPROVED BY GOODMAN. SERIOUS PROPERTY DAMAGE OR PERSONAL INJURY, REDUCED UNIT PERFORMANCE AND/OR HAZARDOUS CONDITIONS MAY RESULT FROM THE USE OF DEVICES THAT HAVE NOT BEEN APPROVED OR CERTIFED BY GOODMAN.

WARNING

INSTALLATION AND REPAIR OF THIS UNIT SHOULD BE PERFORMED ONLY BY INDIVIDUALS MEETING THE REQUIREMENTS OF AN ENTRY LEVEL TECHNICIAN AS SPECIFIED BY THE AIR CONDITIONING AND REFRIGERATION INSTITUTE (ARI). ATTEMPTING TO INSTALL OR REPAIR THIS UNIT WITHOUT SUCH BACKGROUND MAY RESULT IN PRODUCT DAMAGE, PERSONAL INJURY, OR DEATH.

WARNING

TO PREVENT THE RISK OF PROPERTY DAMAGE, PERSONAL INJURY, OR DEATH, DO NOT STORE COMBUSTIBLE MATERIALS OR USE GASOLINE OR OTHER FLAMMABLE LIQUIDS OR VAPORS IN THE VICINITY OF THIS APPLIANCE.

WARNING

GOODMAN WILL NOT BE RESPONSIBLE FOR ANY INJURY OR PROPERTY DAMAGE ARISING FROM IMPROPER SERVICE OR SERVICE PROCEDURES. IF YOU INSTALL OR PERFORM SERVICE ON THIS UNIT, YOU ASSUME RESPONSIBILITY FOR ANY PERSONAL INJURY OR PROPERTY DAMAGE WHICH MAY RESULT. MANY JURISDICTIONS REQUIRE A LICENSE TO INSTALL OR SERVICE HEATING AND AIR CONDITIONING EQUIPMENT.

WARNING

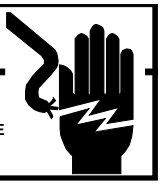

HIGH VOLTAGE

DISCONNECT ALL POWER BEFORE SERVICING OR INSTALLING THIS UNIT. MULTIPLE POWER SOURCES MAY BE PRESENT. FAILURE TO DO SO MAY CAUSE PROPERTY DAMAGE, PERSONAL INJURY OR DEATH.

IMPORTANT INFORMATION

WARNING

IF THE INFORMATION IN THESE INSTRUCTIONS IS NOT FOLLOWED EXACTLY, A FIRE OR EXPLOSION MAY RESULT CAUSING PROPERTY DAMAGE, PERSONAL INJURY OR LOSS OF LIFE.

– DO NOT STORE OR USE GASOLINE OR OTHER FLAMMABLE VAPORS AND LIQUIDS IN THE VICINITY OF THIS OR ANY OTHER APPLIANCE.

– **WHAT TO DO IF YOU SMELL GAS**:

- DO NOT TRY TO LIGHT ANY APPLIANCE.
- DO NOT TOUCH ANY ELECTRICAL SWITCH; DO NOT USE ANY PHONE IN YOUR BUILDING.
- IMMEDIATELY CALL YOUR GAS SUPPLIER FROM A NEIGHBOR'S PHONE. FOLLOW THE GAS SUPPLIER'S INSTRUCTIONS.
- IF YOU CANNOT REACH YOUR GAS SUPPLIER, CALL THE FIRE DEPARTMENT.

– INSTALLATION AND SERVICE MUST BE PERFORMED BY A QUALIFIED INSTALLER, SERVICE AGENCY OR THE GAS SUPPLIER.

WARNING

SHOULD OVERHEATING OCCUR OR THE GAS SUPPLY FAIL TO SHUT OFF, TURN OFF THE MANUAL GAS SHUTOFF VALVE EXTERNAL TO THE FURNACE BEFORE TURNING OFF THE ELECTRICAL SUPPLY.

DANGER
PELIGRO

CARBON MONOXIDE POISONING HAZARD

Special Warning for Installation of Furnace or Air Handling Units in Enclosed Areas such as Garages, Utility Rooms or Parking Areas

Carbon monoxide producing devices (such as an automobile, space heater, gas water heater, etc.) should not be operated in enclosed areas such as unventilated garages, utility rooms or parking areas because of the danger of carbon monoxide (CO) poisoning resulting from the exhaust emissions. If a furnace or air handler is installed in an enclosed area such as a garage, utility room or parking area and a carbon monoxide producing device is operated therein, there must be adequate, direct outside ventilation.

This ventilation is necessary to avoid the danger of CO poisoning which can occur if a carbon monoxide producing device continues to operate in the enclosed area. Carbon monoxide emissions can be (re)circulated throughout the structure if the furnace or air handler is operating in any mode.

CO can cause serious illness including permanent brain damage or death.

B10259-216

To locate an authorized servicer, please consult your telephone book or the dealer from whom you purchased this product. For further assistance, please contact:

CONSUMER INFORMATION LINE
GOODMAN® BRAND PRODUCTS
TOLL FREE **1-877-254-4729** (U.S. only)
email us at: customerservice@goodmanmfg.com
fax us at: **(731) 856-1821**
(Not a technical assistance line for dealers.)

Outside the U.S., call 1-**713-861-2500**.
(Not a technical assistance line for dealers.) Your telephone company will bill you for the call.

PRODUCT IDENTIFICATION

NOMENCLATURE

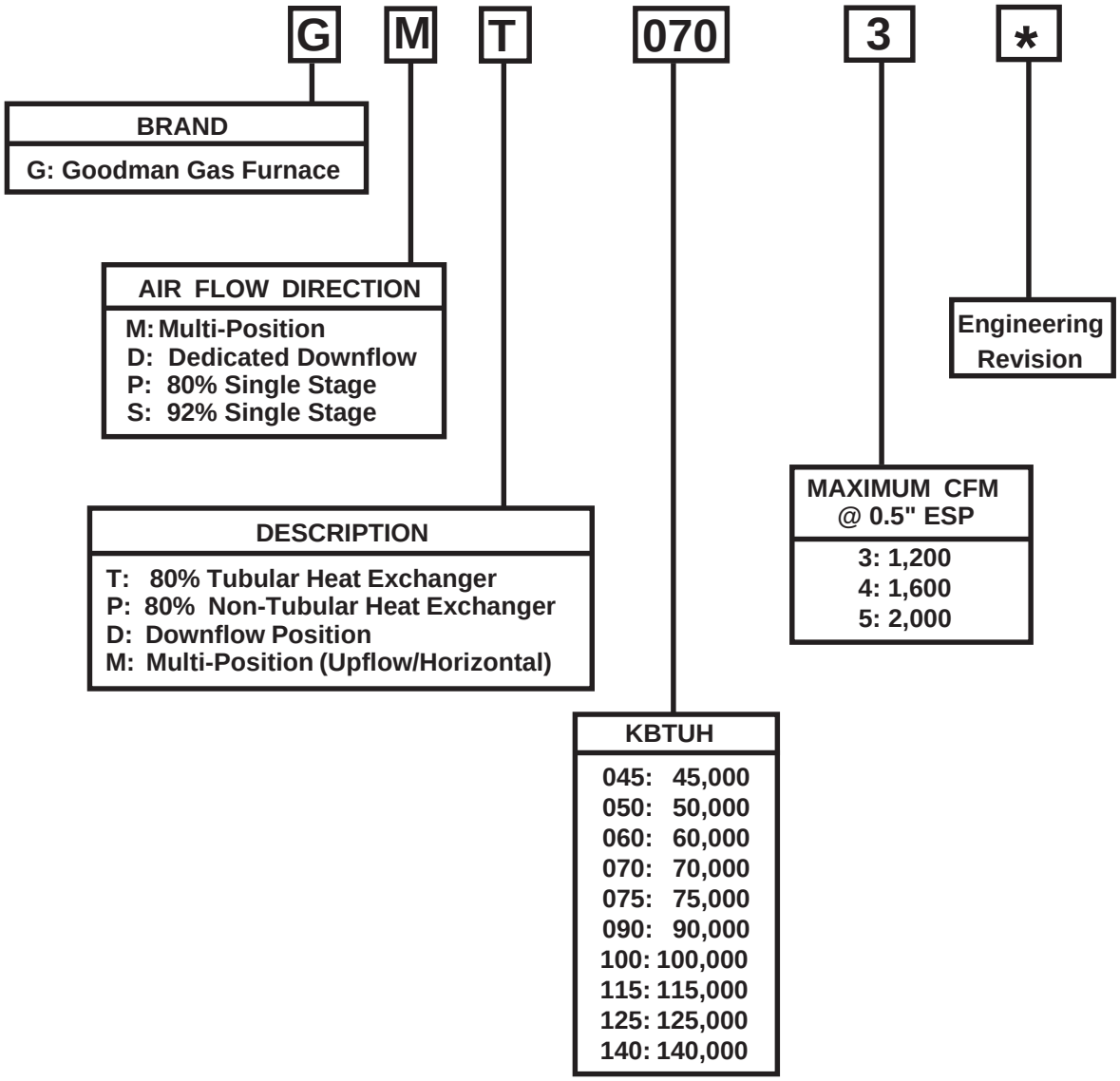

GDT045-3
GDT045-3A
GDT045-3B
GDT070-3
GDT070-3A
GDT070-3B
GDT090-4
GDT090-4A
GDT090-4B
GDT115-5
GDT115-5A
GDT115-5B

GMP050-3
GMP050-32
GMP050-32C
GMP075-3
GMP075-32
GMP075-32C
GMP075-4
GMP100-3
GMP100-4
GMP100-42
GMP100-42C
GMP100-5
GMP125-4

GMP125-5
GMP125-52
GMP125-52C
GMP150-5
GMP150-52
GMP150-52C

GMT045-3
GMT045-34
GMT045-3A
GMT045-3B
GMT070-3
GMT070-3A
GMT070-3B
GMT070-4
GMT070-4A
GMT070-4B
GMT090-3
GMT090-3A
GMT090-3B
GMT090-4

GMT090-4A
GMT090-4B
GMT090-5
GMT090-5A
GMT090-5B
GMT115-5
GMT115-5A
GMT115-5A
GMT115-5B
GMT135-5
GMT140-5
GMT140-5A
GMT140-5B
GMT140-5D

GPD050-3
GPD100-4
GPD125-4

GSM060-3
GSM080-4
GSM100-4
GSMS060-3
GSMS080-4
GSMS100-4

PRODUCT IDENTIFICATION

NOMENCLATURE

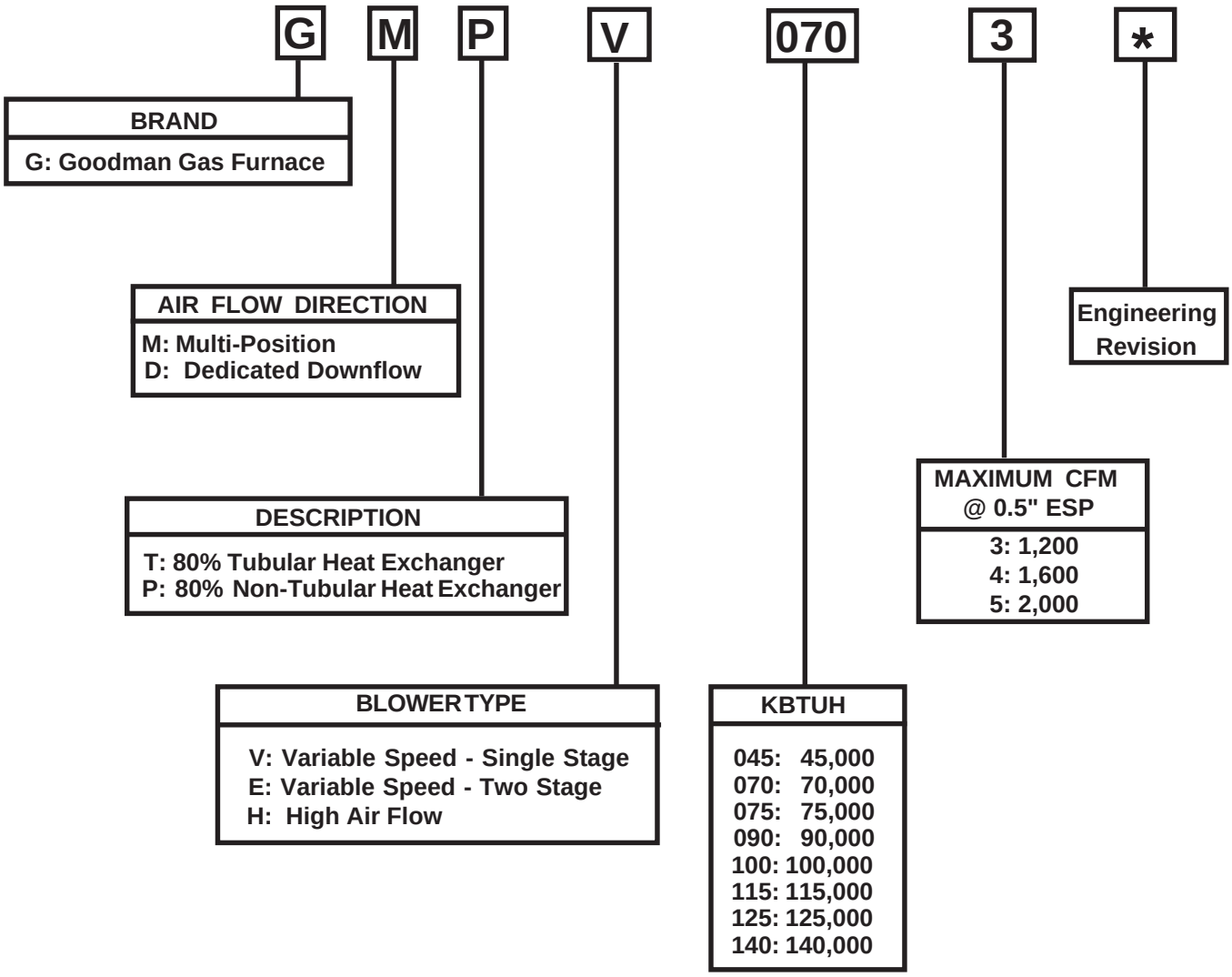

GMPV075-1.5
GMPV075-3
GMPV100-3
GMPV100-5
GMPV125-3
GMPV125-5

GMPE075-3
GMPE075-3A
GMPE100-4
GMPE100-4A
GMPE125-5
GMPE125-5A

GMTH045-3
GMTH045-3A
GMTH045-3B
GMTH070-4
GMTH070-4A
GMTH070-4B
GMTH090-5
GMTH090-5B
GMTH115-5

GMPH050-3
GMPH075-4
GMPH080-5
GMPH120-5

PRODUCT IDENTIFICATION

NOMENCLATURE

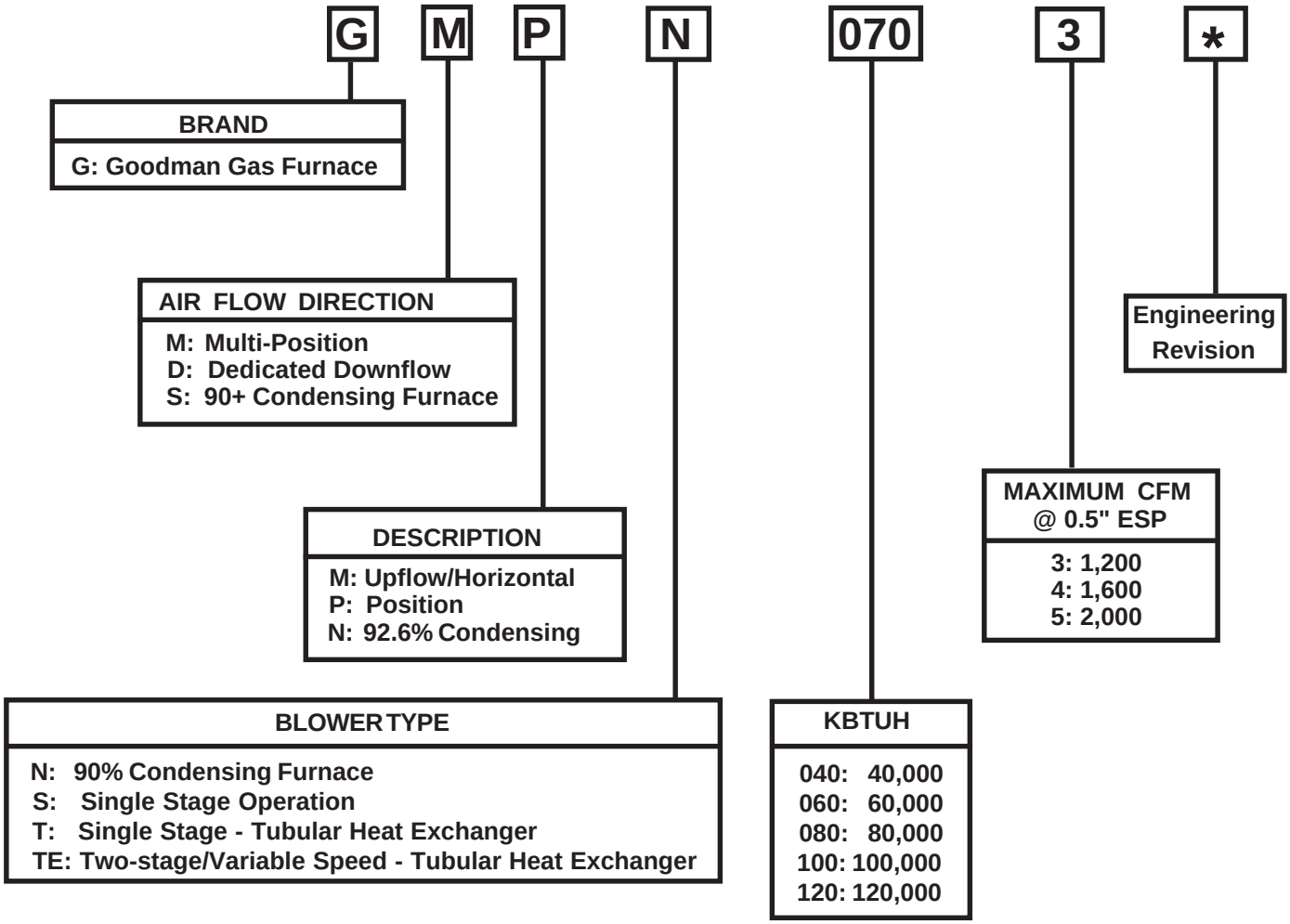

GMNT040-3
GMNT040-3B
GMNT045-3B
GMNT060-3
GMNT060-3B
GMNT080-4
GMNT080-4B
GMNT090-5A
GMNT100-4
GMNT100-4B
GMNT120-5
GMNT120-5B
GMNT120-5D

GMNTE060-3
GMNTE080-4
GMNTE100-4
GMNTE120-5

GMPN040-3
GMPN060-3
GMPN080-4
GMPN100-4
GMPN120-5

GSMS060-3
GSMS080-4
GSMS100-4

PRODUCT IDENTIFICATION

Model #	Description
GDT	**80% AFUE.** Downflow application, single stage, induced draft motor, psc multi-speed motor, integrated control module with diagnostics, hot surface ignition system, multiple roll out switches, pressure switches, aluminized tubular steel heat exchanger, aluminized inshot burners.
GMT	**80% AFUE.** Multi-position (Upflow, Horizontal Left or Right), single stage, induced draft motor, psc multi-speed motor, integrated control module with diagnostics, hot surface ignition system, roll out switches, pressure switches, aluminized tubular steel heat exchanger and inshot burners.
GMTH	**80% AFUE.** Multi-position (Upflow, Horizontal Left or Right), single stage, multi-position induced draft motor, psc multi-speed motor, integrated control module with diagnostics, hot surface ignition system, multiple roll out switches, pressure switches, a rotating combustion blower motor that allows venting the furnace through the top panel, right hand side panel and left hand side panel, aluminized steel heat exchanger and inshot burners.
GMP	**80% AFUE.** Multi-position (Upflow, Downflow, Horizontal Left or Right), single stage, induced draft motor, psc multi-speed motor, integrated control module with diagnostics, hot surface ignition system, multiple roll out switches, pressure switches, aluminized steel heat exchanger, aluminized inshot burners, LoNox.
GMPE	**80% AFUE.** Multi-position (Upflow, Downflow, Horizontal Left or Right), two-stage gas valve, multi-position induced draft motor, variable-speed ECM motor, integrated control module with diagnostics, hot surface ignition system, multiple roll out switches, outlet air limit switch and LoNox approved.
GMPH	**80% AFUE.** Multi-position (Upflow, Downflow, Horizontal Left or Right), single stage, induced draft motor, psc multi-speed motor, integrated control module with diagnostics, hot surface ignition system, multiple roll out switches, pressure switches, aluminized steel heat exchanger and inshot burners.
GMPV	**80% AFUE.** Multi-position (Upflow, Downflow, Horizontal Left or Right), single stage, induced draft motor, variable speed ECM motor, integrated control module with diagnostics, hot surface ignition system, multiple roll out switches, pressure switches, aluminized steel heat exchanger, aluminized inshot burners.
GPD	**80% AFUE.** Downflow application. Single stage, induced draft motor, psc multi-speed motor, integrated control module with diagnostics, hot surface ignition system, multiple roll out switches, pressure switches, aluminized steel heat exchanger, aluminized inshot burners, LoNox, gas and electric connections can be made on the left or right side.

PRODUCT IDENTIFICATION

Model #	Description
GMNV	**90% AFUE.** Multi-position (Upflow or Horizontal), single stage, induced draft motor, variable speed motor, hot surface ignition system, roll out switch, pressure switch, aluminized steel heat exchanger and aluminized inshot burners.
GMNT	**92.6% AFUE.** Multi-position (Upflow, Horizontal Left or Right), induced draft, psc multi-speed motor, integrated control module with diagnostics, hot surface ignition system, multiple roll out switches, pressure switches, multi-position induced draft motor, tubular heat exchanger (primary) and aluminized inshot burners.
GMNTE	**92.6% AFUE.** Multi-position (Upflow, Horizontal Left or Right), two-stage gas valve, two-stage induced draft motor, variable speed blower motor, integrated control module with diagnostics, hot surface ignition system, roll out switches, pressure switches, tubular heat exchanger (primary) and aluminized inshot burners, LoNOx.
GMPN	**92.6% AFUE.** Multi-position (Upflow, Downflow, Horizontal), single stage, induced draft motor, psc multi-speed motor, integrated control module with diagnostics, hot surface ignition system, multiple roll out switches, pressure switches, aluminized steel heat exchanger and aluminized inshot burners.
GSM	**92.6% AFUE.** Multi-position (Upflow, Horizontal), two-stage gas valve, two-stage induced draft motor, psc multi-speed motor, integrated control module with diagnostics, hot surface ignition system, multiple roll out switches, pressure switches, aluminized
GSMS	**92.6% AFUE.** Multi-position (Upflow, Horizontal Left or Right), single-stage application, induced draft, psc multi-speed motor, integrated control module with diagnostics, hot surface ignition system, multiple roll out switches, pressure switches, aluminized steel heat exchanger and inshot burners.
GSU	**92.6% AFUE.** (Upflow Only), two0stage gas valve, induced draft motor, psc multi-speed motor, integrated control module with diagnostics, hot surface ignition system, flame roll-out switch, pressure switches, aluminized stell heat exchanger, stainless steel secondary heat exchanger and aluminized inshot burners.

ACCESSORIES

ACCESSORIES

Model Number Where Used	LPM-01	LPM-03	LPM-04	LPT-01/01A	LPT-00/00A	HA-02	SVB-80	SBM	CVK	SBT
	Honeywell Spring B1880006 White-Rodgers Spring B1880004 Orifice (0.55) B2589900	2-Stage LP Gas Valve B1282618 Honeywell Spring B1880006 White-Rodgers Spring B1880007 Orifice (1.25) B25899125	LP Gas Valve B1282624 Honeywell Spring B1880006 White-Rodgers Spring B1880007 Orifice (1.25) B25899125	Honeywell Spring B1880006 White-Rodgers Spring B1880007 Orifice (1.25) B40899125	Honeywell Spring B1880006 White-Rodgers Spring B1880007 Orifice (0.55) B4089955	Orifices (6 ea./PACK) (0.43) B2589901 / (0.44) B2589902 (0.45) B2589903 / (0.46) B2589904 (0.47) B2589905 / (0.48) B2589906 (0.49) B2589907 / (0.55) B2589900 (0.56) B2589908 / (0.57) B2589909 (0.58) B2589910	Sidewall Venting	Combustible Floor Base	concentric Vent Kit	Combustible Floor Base
GMT					X	X				
GMP	X					X	X	X		
GDT					X	X				X
GMPH	X					X		X		
GMTH					X	X				
GPD	X					X	X	X		
GMPV										
GMPE		X				X	X	X		
GSM		X				X			X	
GSU		X				X				
GMPN	X					X		X	X	
GMNT				X		X			X	X
GMNTE		X				X			X	X
GSMS			X			X			X	

Not used in this application

PRODUCT IDENTIFICATION LIGHTING INSTRUCTIONS

GMT

FOR YOUR SAFETY READ BEFORE OPERATING

WARNING If you do not follow these instructions exactly, a fire or explosion may result causing property damage, personal injury or loss of life.

A. This appliance does not have a pilot. It is equipped with an ignition device which automatically lights the burners. Do not try to light the burners by hand.

B. BEFORE OPERATING smell around the appliance area for gas. Be sure to smell next to the floor because some gas is heavier than air and will settle on the floor.

WHAT TO DO IF YOU SMELL GAS

- Do not try to light any appliance.
- Do not touch any electric switch; do not use any telephone in your building.
- Immediately call your supplier from a neighbor's phone. Follow the gas suppliers instructions.
- If you cannot reach your gas supplier, call the fire department.

C. Use only your hand to move the gas control switch or knob. Never use tools. If the gas control switch or knob will not operate, don't try to repair it, call a qualified service technician. Force or attempted repair may result in a fire or explosion.

D. Do not use this appliance if any part has been under water. Immediately call a qualified service technician to inspect the appliance and to replace any part of the control system and any gas control which has been under water.

OPERATING INSTRUCTIONS

1. STOP! Read the safety information above on this label.
2. Set the thermostat to lowest setting.
3. Turn off all electric power to the appliance.
4. This appliance is equipped with an automatic ignition system which automatically lights the burners. Do not try to light the burners by hand.
5. Remove control access panel.
6. Move the gas control switch or knob to "OFF".

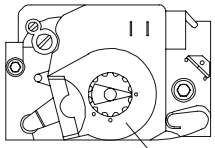

7. Wait five (5) minutes to clear out any gas. If you then smell gas, STOP! Follow "B" in the safety information above on this label. If you don't smell gas, go to the next step.
8. Move the gas control switch or knob to "ON".
9. Replace control access panel.
10. Turn on all electric power to the appliance.
11. Set the thermostat to the desired setting.
12. If the appliance will not operate, follow the instructions "To Turn Off Gas To Appliance" and call your service technician or gas supplier.

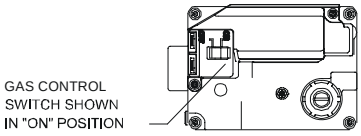

TO TURN OFF GAS TO APPLIANCE

1. Set the thermostat to its lowest setting.
2. Turn off all electric power to the appliance if service is to be performed.
3. Remove control access panel.
4. Move the gas control switch or knob to "OFF". Do not force.
5. Replace control access panel.

WARNING: Improper installation, adjustment, alteration, service or maintenance can cause injury or property damage. Refer to the user's information manual provided with this furnace. For assistance or additional information consult a qualified installer, service agency or the gas supplier.

This furnace must be installed in accordance with the manufacturers instructions and local codes. In the absence of local codes follow the National Fuel Gas Code, ANSI Z223.1.

For indoor installation.

PGB & PGJ
For outdoor installation only.

WARNING: If not installed, operated and maintained in accordance with the manufacturer's instructions, this product could expose you to substances in fuel combustion which can cause death or serious illness and which are known to the State of California to cause cancer, birth defects or other reproductive harm.
This product contains fiberglass insulation. Fiberglass insulation contains a chemical known by the State of California to cause cancer.

FOR YOUR SAFETY Do not store or use gasoline or other flammable vapors and liquids in the vicinity of this or any other appliance.

B14933-224

PRODUCT IDENTIFICATION LIGHTING INSTRUCTIONS

GMP, GMPE, GMPN, GMNT, GMTH

FOR YOUR SAFETY READ BEFORE OPERATING

WARNING If you do not follow these instructions exactly, a fire or explosion may result causing property damage, personal injury or loss of life.

A. This appliance does not have a pilot. It is equipped with an ignition device which automatically lights the burners. Do not try to light the burners by hand.

B. BEFORE OPERATING smell around the appliance area for gas. Be sure to smell next to the floor because some gas is heavier than air and will settle on the floor.

WHAT TO DO IF YOU SMELL GAS

- Do not try to light any appliance.
- Do not touch any electric switch; do not use any telephone in your building.
- Immediately call your supplier from a neighbor's phone. Follow the gas suppliers instructions.
- If you cannot reach your gas supplier, call the fire department.

C. Use only your hand to move the gas control switch or knob. Never use tools. If the gas control switch or knob will not operate, don't try to repair it, call a qualified service technician. Force or attempted repair may result in a fire or explosion.

D. Do not use this appliance if any part has been under water. Immediately call a qualified service technician to inspect the appliance and to replace any part of the control system and any gas control which has been under water.

WARNING: Improper installation, adjustment, alteration, service or maintenance can cause injury or property damage. Refer to the user's information manual provided with this furnace. For assistance or additional information consult a qualified installer, service agency or the gas supplier.

This furnace must be installed in accordance with the manufacturers instructions and local codes. In the absence of local codes follow the National Fuel Gas Code, ANSI Z223.1.

For indoor installation.

PGB & PGJ
For outdoor installation only.

WARNING: If not installed, operated and maintained in accordance with the manufacturer's instructions, this product could expose you to substances in fuel combustion which can cause death or serious illness and which are known to the State of California to cause cancer, birth defects or other reproductive harm.
This product contains fiberglass insulation. Fiberglass insulation contains a chemical known by the State of California to cause cancer.

OPERATING INSTRUCTIONS

1. STOP! Read the safety information above on this label.
2. Set the thermostat to lowest setting.
3. Turn off all electric power to the appliance.
4. This appliance is equipped with an automatic ignition system which automatically lights the burners. Do not try to light the burners by hand.
5. Remove control access panel.
6. Move the gas control switch or knob to "OFF".

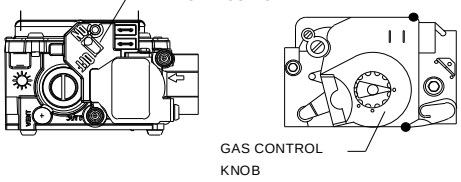

7. Wait five (5) minutes to clear out any gas. If you then smell gas, STOP! Follow "B" in the safety information above on this label. If you don't smell gas, go to the next step.
8. Move the gas control switch or knob to "ON".
9. Replace control access panel.
10. Turn on all electric power to the appliance.
11. Set the thermostat to the desired setting.
12. If the appliance will not operate, follow the instructions "To Turn Off Gas To Appliance" and call your service technician or gas supplier.

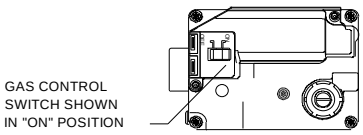

TO TURN OFF GAS TO APPLIANCE

1. Set the thermostat to its lowest setting.
2. Turn off all electric power to the appliance if service is to be performed.
3. Remove control access panel.
4. Move the gas control switch or knob to "OFF". Do not force.
5. Replace control access panel.

FOR YOUR SAFETY Do not store or use gasoline or other flammable vapors and liquids in the vicinity of this or any other appliance.

PRODUCT IDENTIFICATION

LIGHTING INSTRUCTIONS

GMP, GMPE, GMPN

FOR YOUR SAFETY READ BEFORE OPERATING

WARNING

If you do not follow these instructions exactly, a fire or explosion may result causing property damage, personal injury or loss of life.

A. This appliance does not have a pilot. It is equipped with an ignition device which automatically lights the burners. Do not try to light the burners by hand.

B. BEFORE OPERATING smell around the appliance area for gas. Be sure to smell next to the floor because some gas is heavier than air and will settle on the floor.

WHAT TO DO IF YOU SMELL GAS

- Do not try to light any appliance.
- Do not touch any electric switch; do not use any telephone in your building.
- Immediately call your supplier from a neighbor's phone. Follow the gas suppliers instructions.
- If you cannot reach your gas supplier, call the fire department.

C. Use only your hand to move the gas control switch or knob. Never use tools. If the gas control switch or knob will not operate, don't try to repair it, call a qualified service technician. Force or attempted repair may result in a fire or explosion.

D. Do not use this appliance if any part has been under water. Immediately call a qualified service technician to inspect the appliance and to replace any part of the control system and any gas control which has been under water.

OPERATING INSTRUCTIONS

1. STOP! Read the safety information above on this label.
2. Set the thermostat to lowest setting.
3. Turn off all electric power to the appliance.
4. This appliance is equipped with an automatic ignition system which automatically lights the burners. Do not try to light the burners by hand.
5. Remove control access panel.
6. Move the gas control switch or knob to "OFF".

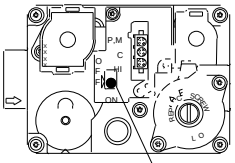

GAS CONTROL SWITCH SHOWN IN "ON" POSITION

7. Wait five (5) minutes to clear out any gas. If you then smell gas, STOP! Follow "B" in the safety information above on this label. If you don't smell gas, go to the next step.
8. Move the gas control switch or knob to "ON".
9. Replace control access panel.
10. Turn on all electric power to the appliance.
11. Set the thermostat to the desired setting.
12. If the appliance will not operate, follow the instructions "To Turn Off Gas To Appliance" and call your service technician or gas supplier.

TO TURN OFF GAS TO APPLIANCE

1. Set the thermostat to its lowest setting.
2. Turn off all electric power to the appliance if service is to be performed.
3. Remove control access panel.
4. Move the gas control switch or knob to "OFF". Do not force.
5. Replace control access panel.

WARNING: Improper installation, adjustment, alteration, service or maintenance can cause injury or property damage. Refer to the user's information manual provided with this furnace. For assistance or additional information consult a qualified installer, service agency or the gas supplier.

This furnace must be installed in accordance with the manufacturers instructions and local codes. In the absence of local codes follow the National Fuel Gas Code, ANSI Z223.1.

For indoor installation.

PGB & PGJ
For outdoor installation only.

WARNING: If not installed, operated and maintained in accordance with the manufacturer's instructions, this product could expose you to substances in fuel combustion which can cause death or serious illness and which are known to the State of California to cause cancer, birth defects or other reproductive harm.
This product contains fiberglass insulation. Fiberglass insulation contains a chemical known by the State of California to cause cancer.

FOR YOUR SAFETY Do not store or use gasoline or other flammable vapors and liquids in the vicinity of this or any other appliance.

SPECIFICATIONS

MODEL	GMT045-3	GMT070-3	GMT070-4	GMT090-3	GMT090-5	GMT090-5	GMT115-5	GMT135-5
Btuh Input (US) Natural Gas	45,000	70,000	70,000	90,000	90,000	90,000	115,000	140,000
Output (US) Natural Gas	36,000	56,000	56,000	72,000	72,000	72,000	92,000	108,000
Btuh Input (US) LP Gas	40,000	60,000	60,000	80,000	80,000	80,000	100,000	120,000
Output (US) LP Gas	32,000	48,000	48,000	64,000	64,000	64,000	80,000	96,000
A.F.U.E.	80%	80%	80%	80%	80%	80%	80%	80%
Rated External Static (" w.c.)	.10 - .50	.10 - .50	.10 - .50	.10 - .50	.10 - .50	.10 - .50	.10 - .50	.10 - .50
Temperature Rise (°F)	25 - 55	25 - 55	20 - 50	35 - 65	35 - 65	35 - 65	35 - 65	45 - 75
Pressure Switch Trip Point (" w.c.)	-0.60	-0.60	-0.60	-0.60	-0.60	-0.70	-0.70	-0.75
Blower Wheel (D" x W")	10 X 6	10 X 6	10 X 8	10 X 8	10 X 8	10 X 10	10 X 10	11 x 10
Blower Horsepower	1/3	1/3	1/2	1/3	1/2	1/2	1/2	3/4
Blower Speeds	3	3	3	3	3	3	3	3
Max CFM @ 0.5 E.S.P.	1438	1165	1518	1400	1532	1875	1988	2209
Power Supply	115-60-1	115-60-1	115-60-1	115-60-1	115-60-1	115-60-1	115-60-1	115-60-1
Minimum Circuit Ampacity (MCA)	5.2	5.2	7.8	5.2	7.8	7.8	7.8	9.6
Maximum Overcurrent Device	15.0	15.0	15.0	15.0	15.0	15.0	15.0	15.0
Transformer (VA)	40	40	40	40	40	40	40	40
Primary Limit Setting (°F)	300	180	170	210	210	320	220	160
Auxiliary Limit Setting (°F)	120	120	120	120	120	120	120	120
Rollout Limit Setting (°F)	300	300	300	300	300	300	300	300
Fan Delay On Heating	30 secs.	30 secs.	30 secs.	30 secs.	30 secs.	30 secs.	30 secs.	30 secs.
Off Heating *	150 secs.	150 secs.	150 secs.	150 secs.	150 secs.	150 secs.	150 secs.	150 secs.
Fan Delay On Cooling	5 secs.	5 secs.	5 secs.	5 secs.	5 secs.	5 secs.	5 secs.	5 secs.
Off Cooling	60 secs.	60 secs.	60 secs.	60 secs.	60 secs.	60 secs.	60 secs.	60 secs.
Fan Delay On - Fan Only	5 secs.	5 secs.	5 secs.	5 secs.	5 secs.	5 secs.	5 secs.	5 secs.
Gas Supply Pressure (Natural/Propane) (" w.c.)	7 / 11	7 / 11	7 / 11	7 / 11	7 / 11	7 / 11	7 / 11	7 / 11
Manifold Pressure (Natural/Propane) (" w.c.)	3.5 / 10	3.5 /10	3.5 /10	3.5 / 10	3.5 / 10	3.5 / 10	3.5 / 10	3.5 / 10
Orifice Size (Natural/Propane)	#43 / #55	#43 / #55	#43 / #55	#43 / #55	#43 / #55	#43 / #55	#43 / #55	#43 / #55
Number of Burners	2	3	3	4	4	4	5	6
Filter Size (in2.) Permanent	290	290	385	290	385	480	480	480
Disposable	580	580	770	580	770	960	960	960
Vent Connector Diameter (inches)	4	4	4	4	4	4	4	4
Shipping Weight (lbs.)	114	124	136	146	146	156	166	176

* Off Heating - This fan delay timing is adjustable (90, 120 or 150 seconds), 150 seconds as shipped.

[1] Vent and combustion air diameters may vary depending upon vent length. Refer to furnace installation instructions.
[2] Minimum Circuit Ampacity = (1.25 x Circulator Blower Amps) + ID Blower amps.
[3] Maximum Overcurrent Protection refers to maximum recommended fuse or circuit breaker size.

NOTES:

1. All furnaces are manufactured for use on 115 VAC, 60 Hz, single phase electrical supply.
2. Gas Service Connection 1/2" FPT.
3. Important: It is required to size fuses and wires properly and make electrical connections in accordance with the National Electrical Code and/or all existing local codes.

SPECIFICATIONS

GMT*A/B

MODEL	GMT045-3A/B	GMT070-3A/B	GMT070-4A/B	GMT090-3A/B	GMT090-4A/B	GMT090-5A/B	GMT115-5A/B	GMT140-5A/B
Btuh Input (US) Natural Gas	45,000	70,000	70,000	90,000	90,000	90,000	115,000	140,000
Output (US) Natural Gas	36,000	56,000	56,000	72,000	72,000	72,000	92,000	112,000
Btuh Input (US) LP Gas	40,000	60,000	60,000	80,000	80,000	80,000	100,000	120,000
Output (US) LP Gas	32,000	48,000	48,000	64,000	64,000	64,000	80,000	96,000
A.F.U.E.	80%	80%	80%	80%	80%	80%	80%	80%
Rated External Static (" w.c.)	.10 - .50	.10 - .50	.10 - .50	.10 - .50	.10 - .50	.10 - .50	.10 - .50	.10 - .50
Temperature Rise (°F)	25 - 55	25 - 55	20 - 50	35 - 65	35 - 65	35 - 65	35 - 65	40 - 70
Pressure Switch Trip Point (" w.c.)	-0.60	-0.60	-0.60	-0.60	-0.60	-0.70	-0.70	-0.75
Blower Wheel (D" x W")	10 X 6	10 X 6	10 X 8	10 X 8	10 X 8	10 X 10	10 X 10	11 x 10
Blower Horsepower	1/3	1/3	1/2	1/3	1/2	1/2	1/2	3/4
Blower Speeds	3	3	3	3	3	3	3	3
Max CFM @ 0.5 E.S.P.	1438	1165	1518	1400	1532	1875	1809	1987
Power Supply	115-60-1	115-60-1	115-60-1	115-60-1	115-60-1	115-60-1	115-60-1	115-60-1
Minimum Circuit Ampacity (MCA)	5.2	5.2	7.8	5.2	7.8	7.8	7.8	9.6
Maximum Overcurrent Device	15.0	15.0	15.0	15.0	15.0	15.0	15.0	15.0
Transformer (VA)	40	40	40	40	40	40	40	40
Primary Limit Setting (°F)	300	180	170	210	210	320	220	160
Auxiliary Limit Setting (°F)	120	120	120	120	120	120	120	120
Rollout Limit Setting (°F)	300	300	300	300	300	300	300	300
Fan Delay On Heating	30 secs.	30 secs.	30 secs.	30 secs.	30 secs.	30 secs.	30 secs.	30 secs.
Off Heating *	150 secs.	150 secs.	150 secs.	150 secs.	150 secs.	150 secs.	150 secs.	150 secs.
Fan Delay On Cooling	5 secs.	5 secs.	5 secs.	5 secs.	5 secs.	5 secs.	5 secs.	5 secs.
Off Cooling	60 secs.	60 secs.	60 secs.	60 secs.	60 secs.	60 secs.	60 secs.	60 secs.
Fan Delay On - Fan Only	5 secs.	5 secs.	5 secs.	5 secs.	5 secs.	5 secs.	5 secs.	5 secs.
Gas Supply Pressure (Natural/Propane) (" w.c.)	7 / 11	7 / 11	7 / 11	7 / 11	7 / 11	7 / 11	7 / 11	7 / 11
Manifold Pressure (Natural/Propane) (" w.c.)	3.5 / 10	3.5 /10	3.5 /10	3.5 / 10	3.5 / 10	3.5 / 10	3.5 / 10	3.5 / 10
Orifice Size (Natural/Propane)	#43 / #55	#43 / #55	#43 / #55	#43 / #55	#43 / #55	#43 / #55	#43 / #55	#43 / #55
Number of Burners	2	3	3	4	4	4	5	6
Filter Size (in^2.) Permanent	290	290	385	290	385	480	480	480
Disposable	580	580	770	580	770	960	960	960
Vent Connector Diameter (inches)	4	4	4	4	4	4	4	4
Shipping Weight (lbs.)	120	130	143	153	153	163	163	183

* Off Heating - This fan delay timing is adjustable (90, 120 or 150 seconds), 150 seconds as shipped.

[1] Vent and combustion air diameters may vary depending upon vent length. Refer to furnace installation instructions.
[2] Minimum Circuit Ampacity = (1.25 x Circulator Blower Amps) + ID Blower amps.
[3] Maximum Overcurrent Protection refers to maximum recommended fuse or circuit breaker size.

NOTES:

1. All furnaces are manufactured for use on 115 VAC, 60 Hz, single phase electrical supply.
2. Gas Service Connection 1/2" FPT.
3. Important: It is required to size fuses and wires properly and make electrical connections in accordance with the National Electrical Code and/or all existing local codes.

SPECIFICATIONS

MODEL	GMT045-3	GMT070-3	GMT070-4	GMT090-3	GMT090-5	GMT090-5	GMT115-5	GMT135-5
Btuh Input (US) Natural Gas	45,000	70,000	70,000	90,000	90,000	90,000	115,000	140,000
Output (US) Natural Gas	36,000	56,000	56,000	72,000	72,000	72,000	92,000	108,000
Btuh Input (US) LP Gas	40,000	60,000	60,000	80,000	80,000	80,000	100,000	120,000
Output (US) LP Gas	32,000	48,000	48,000	64,000	64,000	64,000	80,000	96,000
A.F.U.E.	80%	80%	80%	80%	80%	80%	80%	80%
Rated External Static (" w.c.)	.10 - .50	.10 - .50	.10 - .50	.10 - .50	.10 - .50	.10 - .50	.10 - .50	.10 - .50
Temperature Rise (°F)	25 - 55	25 - 55	20 - 50	35 - 65	35 - 65	35 - 65	35 - 65	45 - 75
Pressure Switch Trip Point (" w.c.)	-0.60	-0.60	-0.60	-0.60	-0.60	-0.70	-0.70	-0.75
Blower Wheel (D" x W")	10 X 6	10 X 6	10 X 8	10 X 8	10 X 8	10 X 10	10 X 10	11 x 10
Blower Horsepower	1/3	1/3	1/2	1/3	1/2	1/2	1/2	3/4
Blower Speeds	3	3	3	3	3	3	3	3
Max CFM @ 0.5 E.S.P.	1438	1165	1518	1400	1532	1875	1988	2209
Power Supply	115-60-1	115-60-1	115-60-1	115-60-1	115-60-1	115-60-1	115-60-1	115-60-1
Minimum Circuit Ampacity (MCA)	5.2	5.2	7.8	5.2	7.8	7.8	7.8	9.6
Maximum Overcurrent Device	15.0	15.0	15.0	15.0	15.0	15.0	15.0	15.0
Transformer (VA)	40	40	40	40	40	40	40	40
Primary Limit Setting (°F)	300	180	170	210	210	320	220	160
Auxiliary Limit Setting (°F)	120	120	120	120	120	120	120	120
Rollout Limit Setting (°F)	300	300	300	300	300	300	300	300
Fan Delay On Heating	30 secs.	30 secs.	30 secs.	30 secs.	30 secs.	30 secs.	30 secs.	30 secs.
Off Heating *	150 secs.	150 secs.	150 secs.	150 secs.	150 secs.	150 secs.	150 secs.	150 secs.
Fan Delay On Cooling	5 secs.	5 secs.	5 secs.	5 secs.	5 secs.	5 secs.	5 secs.	5 secs.
Off Cooling	60 secs.	60 secs.	60 secs.	60 secs.	60 secs.	60 secs.	60 secs.	60 secs.
Fan Delay On - Fan Only	5 secs.	5 secs.	5 secs.	5 secs.	5 secs.	5 secs.	5 secs.	5 secs.
Gas Supply Pressure (Natural/Propane) (" w.c.)	7 / 11	7 / 11	7 / 11	7 / 11	7 / 11	7 / 11	7 / 11	7 / 11
Manifold Pressure (Natural/Propane) (" w.c.)	3.5 / 10	3.5 /10	3.5 /10	3.5 / 10	3.5 / 10	3.5 / 10	3.5 / 10	3.5 / 10
Orifice Size (Natural/Propane)	#43 / #55	#43 / #55	#43 / #55	#43 / #55	#43 / #55	#43 / #55	#43 / #55	#43 / #55
Number of Burners	2	3	3	4	4	4	5	6
Filter Size (in2.) Permanent	290	290	385	290	385	480	480	480
Disposable	580	580	770	580	770	960	960	960
Vent Connector Diameter (inches)	4	4	4	4	4	4	4	4
Shipping Weight (lbs.)	114	124	136	146	146	156	166	176

* Off Heating - This fan delay timing is adjustable (90, 120 or 150 seconds), 150 seconds as shipped.

[1] Vent and combustion air diameters may vary depending upon vent length. Refer to furnace installation instructions.
[2] Minimum Circuit Ampacity = (1.25 x Circulator Blower Amps) + ID Blower amps.
[3] Maximum Overcurrent Protection refers to maximum recommended fuse or circuit breaker size.

NOTES:

1. All furnaces are manufactured for use on 115 VAC, 60 Hz, single phase electrical supply.
2. Gas Service Connection 1/2" FPT.
3. Important: It is required to size fuses and wires properly and make electrical connections in accordance with the National Electrical Code and/or all existing local codes.

SPECIFICATIONS

GMT*A/B

MODEL	GMT045-3A/B	GMT070-3A/B	GMT070-4A/B	GMT090-3A/B	GMT090-4A/B	GMT090-5A/B	GMT115-5A/B	GMT140-5A/B
Btuh Input (US) Natural Gas	45,000	70,000	70,000	90,000	90,000	90,000	115,000	140,000
Output (US) Natural Gas	36,000	56,000	56,000	72,000	72,000	72,000	92,000	112,000
Btuh Input (US) LP Gas	40,000	60,000	60,000	80,000	80,000	80,000	100,000	120,000
Output (US) LP Gas	32,000	48,000	48,000	64,000	64,000	64,000	80,000	96,000
A.F.U.E.	80%	80%	80%	80%	80%	80%	80%	80%
Rated External Static (" w.c.)	.10 - .50	.10 - .50	.10 - .50	.10 - .50	.10 - .50	.10 - .50	.10 - .50	.10 - .50
Temperature Rise (°F)	25 - 55	25 - 55	20 - 50	35 - 65	35 - 65	35 - 65	35 - 65	40 - 70
Pressure Switch Trip Point (" w.c.)	-0.60	-0.60	-0.60	-0.60	-0.60	-0.70	-0.70	-0.75
Blower Wheel (D" x W")	10 X 6	10 X 6	10 X 8	10 X 8	10 X 8	10 X 10	10 X 10	11 x 10
Blower Horsepower	1/3	1/3	1/2	1/3	1/2	1/2	1/2	3/4
Blower Speeds	3	3	3	3	3	3	3	3
Max CFM @ 0.5 E.S.P.	1438	1165	1518	1400	1532	1875	1809	1987
Power Supply	115-60-1	115-60-1	115-60-1	115-60-1	115-60-1	115-60-1	115-60-1	115-60-1
Minimum Circuit Ampacity (MCA)	5.2	5.2	7.8	5.2	7.8	7.8	7.8	9.6
Maximum Overcurrent Device	15.0	15.0	15.0	15.0	15.0	15.0	15.0	15.0
Transformer (VA)	40	40	40	40	40	40	40	40
Primary Limit Setting (°F)	300	180	170	210	210	320	220	160
Auxiliary Limit Setting (°F)	120	120	120	120	120	120	120	120
Rollout Limit Setting (°F)	300	300	300	300	300	300	300	300
Fan Delay On Heating	30 secs.	30 secs.	30 secs.	30 secs.	30 secs.	30 secs.	30 secs.	30 secs.
Off Heating *	150 secs.	150 secs.	150 secs.	150 secs.	150 secs.	150 secs.	150 secs.	150 secs.
Fan Delay On Cooling	5 secs.	5 secs.	5 secs.	5 secs.	5 secs.	5 secs.	5 secs.	5 secs.
Off Cooling	60 secs.	60 secs.	60 secs.	60 secs.	60 secs.	60 secs.	60 secs.	60 secs.
Fan Delay On - Fan Only	5 secs.	5 secs.	5 secs.	5 secs.	5 secs.	5 secs.	5 secs.	5 secs.
Gas Supply Pressure (Natural/Propane) (" w.c.)	7 / 11	7 / 11	7 / 11	7 / 11	7 / 11	7 / 11	7 / 11	7 / 11
Manifold Pressure (Natural/Propane) (" w.c.)	3.5 / 10	3.5 /10	3.5 /10	3.5 / 10	3.5 / 10	3.5 / 10	3.5 / 10	3.5 / 10
Orifice Size (Natural/Propane)	#43 / #55	#43 / #55	#43 / #55	#43 / #55	#43 / #55	#43 / #55	#43 / #55	#43 / #55
Number of Burners	2	3	3	4	4	4	5	6
Filter Size (in^2.) Permanent	290	290	385	290	385	480	480	480
Disposable	580	580	770	580	770	960	960	960
Vent Connector Diameter (inches)	4	4	4	4	4	4	4	4
Shipping Weight (lbs.)	120	130	143	153	153	163	163	183

* Off Heating - This fan delay timing is adjustable (90, 120 or 150 seconds), 150 seconds as shipped.

[1] Vent and combustion air diameters may vary depending upon vent length. Refer to furnace installation instructions.
[2] Minimum Circuit Ampacity = (1.25 x Circulator Blower Amps) + ID Blower amps.
[3] Maximum Overcurrent Protection refers to maximum recommended fuse or circuit breaker size.

NOTES:

1. All furnaces are manufactured for use on 115 VAC, 60 Hz, single phase electrical supply.
2. Gas Service Connection 1/2" FPT.
3. Important: It is required to size fuses and wires properly and make electrical connections in accordance with the National Electrical Code and/or all existing local codes.

MODEL	GDT045-3	GDT070-3	GDT090-4	GDT115-5
Btuh Input (US) Natural Gas	45,000	70,000	100,000	115,000
Output (US) Natural Gas	36,000	56,000	80,000	100,000
Btuh Input (US) LP Gas	40,000	60,000	80,000	100,000
Output (US) LP Gas	32,000	48,000	64,000	80,000
A.F.U.E.	80%	80%	80%	80%
Rated External Static (" w.c.)	.10 - .50	.10 - .50	.10 - .50	.10 - .50
Temperature Rise (°F)	25 - 55	30 - 60	40 - 70	45 - 75
Pressure Switch Trip Point (" w.c.)	-0.60	-0.60	-0.60	-0.70
Blower Wheel (D" x W")	10 X 6	10 X 6	10 X 8	10 X 10
Blower Horsepower	1/3	1/3	1/2	1/2
Blower Speeds	3	3	3	3
Max CFM @ 0.5 E.S.P.	1340	1225	1670	1965
Power Supply	115-60-1	115-60-1	115-60-1	115-60-1
Minimum Circuit Ampacity (MCA)	5.2	5.2	7.8	7.8
Maximum Overcurrent Device	15.0	15.0	15.0	15.0
Transformer (VA)	40	40	40	40
Primary Limit Setting (°F)	300	240	250	220
Auxiliary Limit Setting (°F)	120	120	120	120
Rollout Limit Setting (°F)	300	300	300	300
Fan Delay On Heating	30 secs.	30 secs.	30 secs.	30 secs.
Off Heating *	150 secs.	150 secs.	150 secs.	150 secs.
Fan Delay On Cooling	5 secs.	5 secs.	5 secs.	5 secs.
Off Cooling	60 secs.	60 secs.	60 secs.	60 secs.
Fan Delay On - Fan Only	5 secs.	5 secs.	5 secs.	5 secs.
Gas Supply Pressure (Natural/Propane) (" w.c.)	7 / 11	7 / 11	7 / 11	7 / 11
Manifold Pressure (Natural/Propane) (" w.c.)	3.5 / 10	3.5 /10	3.5 / 10	3.5 / 10
Orifice Size (Natural/Propane)	#43 / #55	#43 / #55	#43 / #55	#43 / #55
Number of Burners	2	3	4	5
Filter Size (in^2.) Permanent	290	290	385	480
Disposable	580	580	770	960
Vent Connector Diameter (inches)	4	4	4	4
Shipping Weight (lbs.)	114	124	146	168

* Off Heating - This fan delay timing is adjustable (90, 120 or 150 seconds), 150 seconds as shipped.

Minimum Circuit Ampacity = (1.25 x Circulator Blower Amps) + ID Blower amps.3 Maximum Overcurrent Protection refers to maximum recommended fuse or circuit breaker size.

NOTES:
1. All furnaces are manufactured for use on 115 VAC, 60 Hz, single phase electrical supply.
2. Gas Service Connection 1/2" FPT.
3. Important: It is required to size fuses and wires properly and make electrical connections in accordance with the National Electrical Code and/or all existing local codes.

SPECIFICATIONS GDT-A

MODEL	GDT045-3A	GDT070-3A	GDT090-4A	GDT115-5A
Btuh Input (US) Natural Gas	45,000	70,000	100,000	115,000
Output (US) Natural Gas	36,000	56,000	72,000	100,000
Btuh Input (US) LP Gas	40,000	60,000	80,000	100,000
Output (US) LP Gas	32,000	48,000	64,000	80,000
A.F.U.E.	80%	80%	80%	80%
Rated External Static (" w.c.)	.10 - .50	.10 - .50	.10 - .50	.10 - .50
Temperature Rise (°F)	25 - 55	30 - 60	35 - 65	40 - 70
Pressure Switch Trip Point (" w.c.)	-0.60	-0.60	-0.60	-0.70
Blower Wheel (D" x W")	10 X 6	10 X 6	10 X 8	10 X 10
Blower Horsepower	1/3	1/3	1/2	1/2
Blower Speeds	3	3	3	3
Max CFM @ 0.5 E.S.P.	1340	1225	1670	1965
Power Supply	115-60-1	115-60-1	115-60-1	115-60-1
Minimum Circuit Ampacity (MCA)	5.2	5.2	7.8	7.8
Maximum Overcurrent Device	15.0	15.0	15.0	15.0
Transformer (VA)	40	40	40	40
Primary Limit Setting (°F)	300	240	250	220
Auxiliary Limit Setting (°F)	120	120	120	120
Rollout Limit Setting (°F)	300	300	300	300
Fan Delay On Heating	30 secs.	30 secs.	30 secs.	30 secs.
Off Heating *	150 secs.	150 secs.	150 secs.	150 secs.
Fan Delay On Cooling	5 secs.	5 secs.	5 secs.	5 secs.
Off Cooling	60 secs.	60 secs.	60 secs.	60 secs.
Fan Delay On - Fan Only	5 secs.	5 secs.	5 secs.	5 secs.
Gas Supply Pressure (Natural/Propane) (" w.c.)	7 / 11	7 / 11	7 / 11	7 / 11
Manifold Pressure (Natural/Propane) (" w.c.)	3.5 / 10	3.5 /10	3.5 / 10	3.5 / 10
Orifice Size (Natural/Propane)	#43 / #55	#43 / #55	#43 / #55	#43 / #55
Number of Burners	2	3	4	5
Filter Size (in^2.) Permanent	290	290	385	480
Disposable	580	580	770	960
Vent Connector Diameter (inches)	4	4	4	4
Shipping Weight (lbs.)	120	130	153	175

* Off Heating - This fan delay timing is adjustable (90, 120 or 150 seconds), 150 seconds as shipped.

Minimum Circuit Ampacity = (1.25 x Circulator Blower Amps) + ID Blower amps.3 Maximum Overcurrent Protection refers to maximum recommended fuse or circuit breaker size.

NOTES:
1. All furnaces are manufactured for use on 115 VAC, 60 Hz, single phase electrical supply.
2. Gas Service Connection 1/2" FPT.
3. Important: It is required to size fuses and wires properly and make electrical connections in accordance with the National Electrical Code and/or all existing local codes.

MODEL	GDT045-3B	GDT070-3B	GDT090-4B	GDT115-5B
Btuh Input (US) Natural Gas	45,000	70,000	100,000	115,000
Output (US) Natural Gas	36,000	56,000	72,000	92,000
Btuh Input (US) LP Gas	40,000	60,000	80,000	100,000
Output (US) LP Gas	32,000	48,000	64,000	80,000
A.F.U.E.	80%	80%	80%	80%
Rated External Static (" w.c.)	.10 - .50	.10 - .50	.10 - .50	.10 - .50
Temperature Rise (°F)	20 - 50	30 - 60	35 - 65	40 - 70
Pressure Switch Trip Point (" w.c.)	-0.60	-0.60	-0.60	-0.70
Blower Wheel (D" x W")	10 X 6	10 X 6	10 X 8	10 X 10
Blower Horsepower	1/3	1/3	1/2	1/2
Blower Speeds	4	4	4	4
Max CFM @ 0.5 E.S.P.	1262	1262	1844	2134
Power Supply	115-60-1	115-60-1	115-60-1	115-60-1
Minimum Circuit Ampacity (MCA)	8.1	8.1	12.5	12.5
Maximum Overcurrent Device	15.0	15.0	15.0	15.0
Transformer (VA)	40	40	40	40
Primary Limit Setting (°F)	300	240	250	220
Auxiliary Limit Setting (°F)	120	120	120	120
Rollout Limit Setting (°F)	300	300	300	300
Fan Delay On Heating	30 secs.	30 secs.	30 secs.	30 secs.
Off Heating *	150 secs.	150 secs.	150 secs.	150 secs.
Fan Delay On Cooling	5 secs.	5 secs.	5 secs.	5 secs.
Off Cooling	60 secs.	60 secs.	60 secs.	60 secs.
Fan Delay On - Fan Only	5 secs.	5 secs.	5 secs.	5 secs.
Gas Supply Pressure (Natural/Propane) (" w.c.)	7 / 11	7 / 11	7 / 11	7 / 11
Manifold Pressure (Natural/Propane) (" w.c.)	3.5 / 10	3.5 /10	3.5 / 10	3.5 / 10
Orifice Size (Natural/Propane)	#43 / #55	#43 / #55	#43 / #55	#43 / #55
Number of Burners	2	3	4	5
Filter Size (in^2.) Permanent	290	290	385	480
Disposable	580	580	770	960
Vent Connector Diameter (inches)	4	4	4	4
Shipping Weight (lbs.)	120	130	153	175

* Off Heating - This fan delay timing is adjustable (90, 120 or 150 seconds), 150 seconds as shipped.

Minimum Circuit Ampacity = (1.25 x Circulator Blower Amps) + ID Blower amps.3 Maximum Overcurrent Protection refers to maximum recommended fuse or circuit breaker size.

NOTES:
1. All furnaces are manufactured for use on 115 VAC, 60 Hz, single phase electrical supply.
2. Gas Service Connection 1/2" FPT.
3. Important: It is required to size fuses and wires properly and make electrical connections in accordance with the National Electrical Code and/or all existing local codes.

MODEL	GMTH045-3	GMTH070-3	GMTH115-5
Btuh Input (US) Natural Gas	45,000	70,000	115,000
Output (US) Natural Gas	36,000	56,000	92,000
Btuh Input (US) LP Gas	40,000	60,000	100,000
Output (US) LP Gas	32,000	48,000	80,000
A.F.U.E.	80%	80%	80%
Rated External Static (" w.c.)	.10 - .50	.10 - .50	.10 - .50
Temperature Rise (°F)	15 - 45	20 - 50	35 - 65
Pressure Switch Trip Point (" w.c.)	-0.60	-0.60	-1.00
Blower Wheel (D" x W")	10 X 6	11 X 8	11 X 10
Blower Horsepower	1/3	3/4	3/4
Blower Speeds	3	3	3
Max CFM @ 0.5 E.S.P.	1490	1891	2188
Power Supply	115-60-1	115-60-1	115-60-1
Minimum Circuit Ampacity (MCA)	7.8	9.6	9.6
Maximum Overcurrent Device	15.0	15.0	15.0
Transformer (VA)	40	40	40
Primary Limit Setting (°F)	230	240	300
Auxiliary Limit Setting (°F)	120	120	120
Rollout Limit Setting (°F)	300	300	300
Fan Delay On Heating	30 secs.	30 secs.	30 secs.
Off Heating *	150 secs.	150 secs.	150 secs.
Fan Delay On Cooling	5 secs.	5 secs.	5 secs.
Off Cooling	60 secs.	60 secs.	60 secs.
Fan Delay On - Fan Only	5 secs.	5 secs.	5 secs.
Gas Supply Pressure (Natural/Propane) (" w.c.)	7 / 11	7 / 11	7 / 11
Manifold Pressure (Natural/Propane) (" w.c.)	3.5 / 10	3.5 /10	3.5 / 10
Orifice Size (Natural/Propane)	#43 / #55	#43 / #55	#43 / #55
Number of Burners	2	3	5
Filter Size (in^2.) Permanent	290	385	480
Disposable	580	770	960
Vent Connector Diameter (inches)	4	4	4
Shipping Weight (lbs.)	114	140	170

* Off Heating - This fan delay timing is adjustable (90, 120 or 150 seconds), 150 seconds as shipped.

Minimum Circuit Ampacity = (1.25 x Circulator Blower Amps) + ID Blower amps.3 Maximum Overcurrent Protection refers to maximum recommended fuse or circuit breaker size.

NOTES:
1. All furnaces are manufactured for use on 115 VAC, 60 Hz, single phase electrical supply.
2. Gas Service Connection 1/2" FPT.
3. Important: It is required to size fuses and wires properly and make electrical connections in accordance with the National Electrical Code and/or all existing local codes.

MODEL	GMTH045-3A/B	GMTH070-3A/B	GMTH090-5A/B
Btuh Input (US) Natural Gas	45,000	70,000	90,000
Output (US) Natural Gas	36,000	56,000	72,000
Btuh Input (US) LP Gas	40,000	60,000	80,000
Output (US) LP Gas	32,000	48,000	64,000
A.F.U.E.	80%	80%	80%
Rated External Static (" w.c.)	.10 - .50	.10 - .50	.10 - .50
Temperature Rise (°F)	15 - 45	20 - 50	35 - 65
Pressure Switch Trip Point (" w.c.)	-0.60	-0.60	-0.70
Blower Wheel (D" x W")	10 X 6	10 X 8	11 X 10
Blower Horsepower	1/3	3/4	3/4
Blower Speeds	4	3	3
Max CFM @ 0.5 E.S.P.	1499	1773	2134
Power Supply	115-60-1	115-60-1	115-60-1
Minimum Circuit Ampacity (MCA)	12.5	11.8	11.8
Maximum Overcurrent Device	15.0	15.0	15.0
Transformer (VA)	40	40	40
Primary Limit Setting (°F)	230	240	240
Auxiliary Limit Setting (°F)	120	120	120
Rollout Limit Setting (°F)	300	300	300
Fan Delay On Heating	30 secs.	30 secs.	30 secs.
Off Heating *	150 secs.	150 secs.	150 secs.
Fan Delay On Cooling	5 secs.	5 secs.	5 secs.
Off Cooling	60 secs.	60 secs.	60 secs.
Fan Delay On - Fan Only	5 secs.	5 secs.	5 secs.
Gas Supply Pressure (Natural/Propane) (" w.c.)	7 / 11	7 / 11	7 / 11
Manifold Pressure (Natural/Propane) (" w.c.)	3.5 / 10	3.5 /10	3.5 /10
Orifice Size (Natural/Propane)	#43 / #55	#43 / #55	#43 / #55
Number of Burners	2	3	4
Filter Size (in^2.) Permanent	290	385	480
Disposable	580	770	960
Vent Connector Diameter (inches)	4	4	4
Shipping Weight (lbs.)	120	130	153

* Off Heating - This fan delay timing is adjustable (90, 120 or 150 seconds), 150 seconds as shipped.

Minimum Circuit Ampacity = (1.25 x Circulator Blower Amps) + ID Blower amps.3 Maximum Overcurrent Protection refers to maximum recommended fuse or circuit breaker size.

NOTES:
1. All furnaces are manufactured for use on 115 VAC, 60 Hz, single phase electrical supply.
2. Gas Service Connection 1/2" FPT.
3. Important: It is required to size fuses and wires properly and make electrical connections in accordance with the National Electrical Code and/or all existing local codes.

SPECIFICATIONS

PERFORMANCE RATINGS

Model Number	Natural Gas Input Btuh	Natural Gas Heating Capacity Btuh	DOE** AFUE	Temperature Rise Range (°F)
GMP050-3	45,000	36,000	80.0	25 - 55
GMP075-3	75,000	60,000	80.0	35 - 65
GMP075-4	75,000	60,000	80.0	25 - 55
GMP100-3	100,000	80,000	80.0	45 - 75
GMP100-4	100,000	80,000	80.0	35 - 65
GMP100-5	100,000	80,000	80.0	35 - 65
GMP125-4	125,000	100,000	80.0	45 - 75
GMP125-5	125,000	100,000	80.0	45 - 75
GMP150-5	140,000	112,000	80.0	35 - 65

BEFORE PURCHASING THIS APPLIANCE, READ IMPORTANT ENERGY COST AND EFFICIENCY INFORMATION AVAILABLE FROM YOUR RETAILER.

SPECIFICATION DATA

Model Number	Circulator Blower			Vent Diameter[1] (in.)	Filter Size (in^2.)[4]	Minimum Circuit Ampacity[2] (Amps)	Maximum Overcurrent Protection[3] (Amps)	Ship. Wt. (lbs)
	Size (D"xW")	HP	No. of Speeds		Permanent			
GMP050-3	10 X 6	1/3	4	4	14 X 25	5.2	15.0	114
GMP075-3	10 X 6	1/3	4	4	14 X 25	5.2	15.0	124
GMP075-4	10 X 8	1/2	3	4	16 X 25	7.8	15.0	136
GMP100-3	10 X 8	1/3	4	4	16 X 25	5.2	15.0	146
GMP100-4	10 X 8	1/2	3	4	16 X 25	7.8	15.0	146
GMP100-5	11 X 10	3/4	3	4	20 X25	8.2	15.0	156
GMP125-4	10 x 10	1/2	3	4	20 X 25	7.8	15.0	166
GMP125-5	11 X 10	3/4	3	4	20 X 25	8.2	15.0	166
GMP150-5	10 X 6(2)	3/4	3	4*	24 X 25	9.6	15.0	176

[1] Vent and combustion air diameters may vary depending upon vent length. Refer to furnace installation instructions.

[2] Minimum Circuit Ampacity = (1.25 x Circulator Blower Amps) + ID Blower amps.

[3] Maximum Overcurrent Protection refers to maximum recommended fuse or circuit breaker size.

4 Filter dimensions for bottom application. All models require 18" x 25" filter(s) for side air installations. Permanent air filters recommended. Both sides or bottom inlet(s) must be used for applications over 1800 cfm.

* GMP150-5 requires 5" diameter vent in downflow configuration.

NOTES:

1. All furnaces are manufactured for use on 115 VAC, 60 Hz, single phase electrical supply.
2. Gas Service Connection 1/2" FPT.
3. Important: It is required to size fuses and wires properly and make electrical connections in accordance with the National Electrical Code and/or all existing local codes.

SPECIFICATIONS

PERFORMANCE RATINGS

Model Number	Natural Gas (Btuh)		Propane Gas		DOE AFUE	Temperature Rise Range
	Input	Output	Input	Output		
GPD050-3	45,000	36,000	40,000	32,000	80.0	25 - 55
GPD075-3	75,000	60,000	60,000	48,000	80.0	30 - 60
GPD100-4	100,000	80,000	80,000	64,000	80.0	40 - 70
GPD125-4	125,000	100,000	100,000	80,000	80.0	45 - 75

BEFORE PURCHASING THIS APPLIANCE, READ IMPORTANT ENERGY COST AND EFFICIENCY INFORMATION AVAILABLE FROM YOUR RETAILER.

SPECIFICATION DATA

Model Number	Circulator Blower			Vent Diameter[1] (in.)	Filter Size (in^2.)	Minimum Circuit Ampacity[2] (Amps)	Maximum Overcurrent Protection[3] (Amps)	Ship. Wt. (lbs)
	Size (D"xW")	HP	No. of Speeds		Permanent			
GPD050-3	10 X 6	1/3	4	4	188 x 375	5.2	15.0	114
GPD075-3	10 X 6	1/3	4	4	275 x 555	5.2	15.0	124
GPD100-4	10 X 8	1/2	3	4	303 x 606	7.8	15.0	146
GPD125-4	10 X 10	1/2	3	4	347 x 649	7.8	15.0	166

[1] Vent and combustion air diameters may vary depending upon vent length. Refer to furnace installation instructions.

[2] Minimum Circuit Ampacity = (1.25 x Circulator Blower Amps) + ID Blower amps.

[3] Maximum Overcurrent Protection refers to maximum recommended fuse or circuit breaker size.

NOTES:

1. All furnaces are manufactured for use on 115 VAC, 60 Hz, single phase electrical supply.
2. Gas Service Connection 1/2" FPT.
3. Important: It is required to size fuses and wires properly and make electrical connections in accordance with the National Electrical Code and/or all existing local codes.

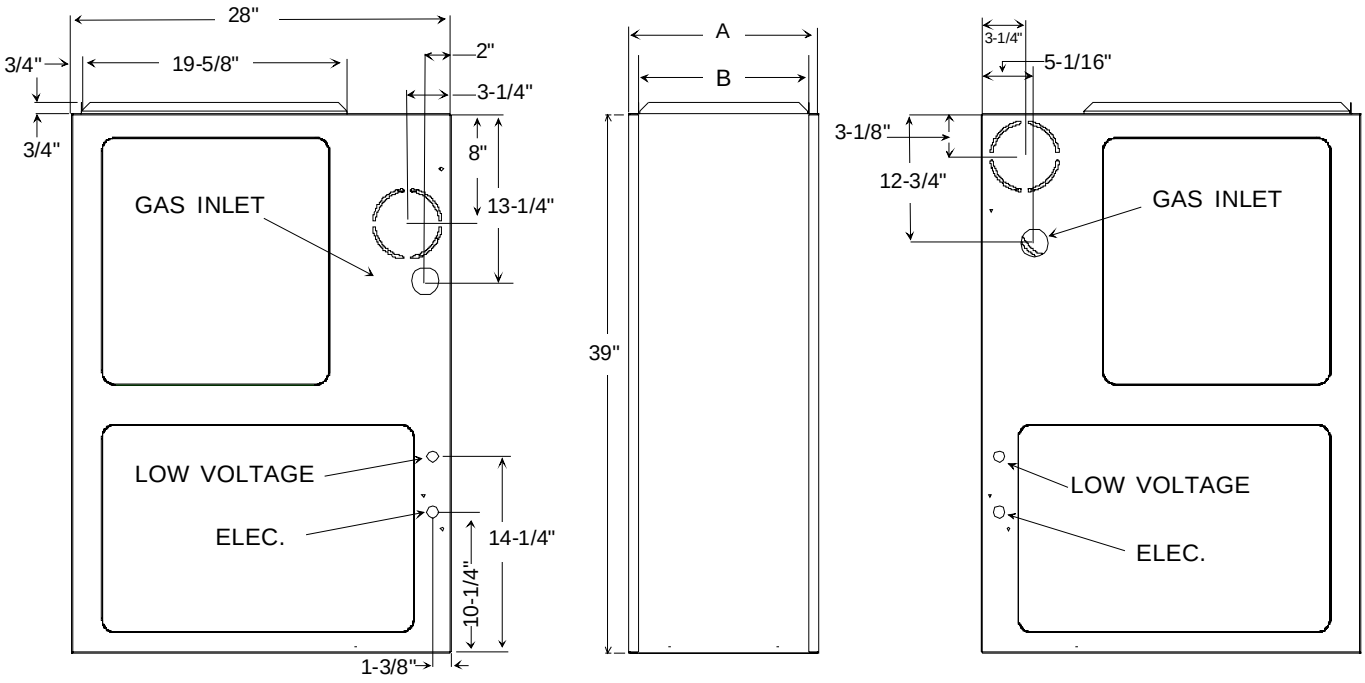

Model Number	A	B
GMT045-3* GMT070-3*	14"	12 1/2"
GMT070-4* GMT090-3* GMT090-4*	17-1/2"	16"
GMT090-5* GMT115-5*	21"	19-1/2"
GMT140-5*	24-1/2"	23"

MINIMUM CLEARANCES TO COMBUSTIBLE MATERIALS (INCHES)					
Sides	Rear	Front*	Vent**		Top
			SW	B	
1	0	3	6	1	1

Approved for line contact in the horizontal position.
*36" clearance for serviceability recommended.
**Single Wall Vent (SW) to be used only as a connector. Refer to the venting tables outlined in the Installation Manual for additional venting requirements.

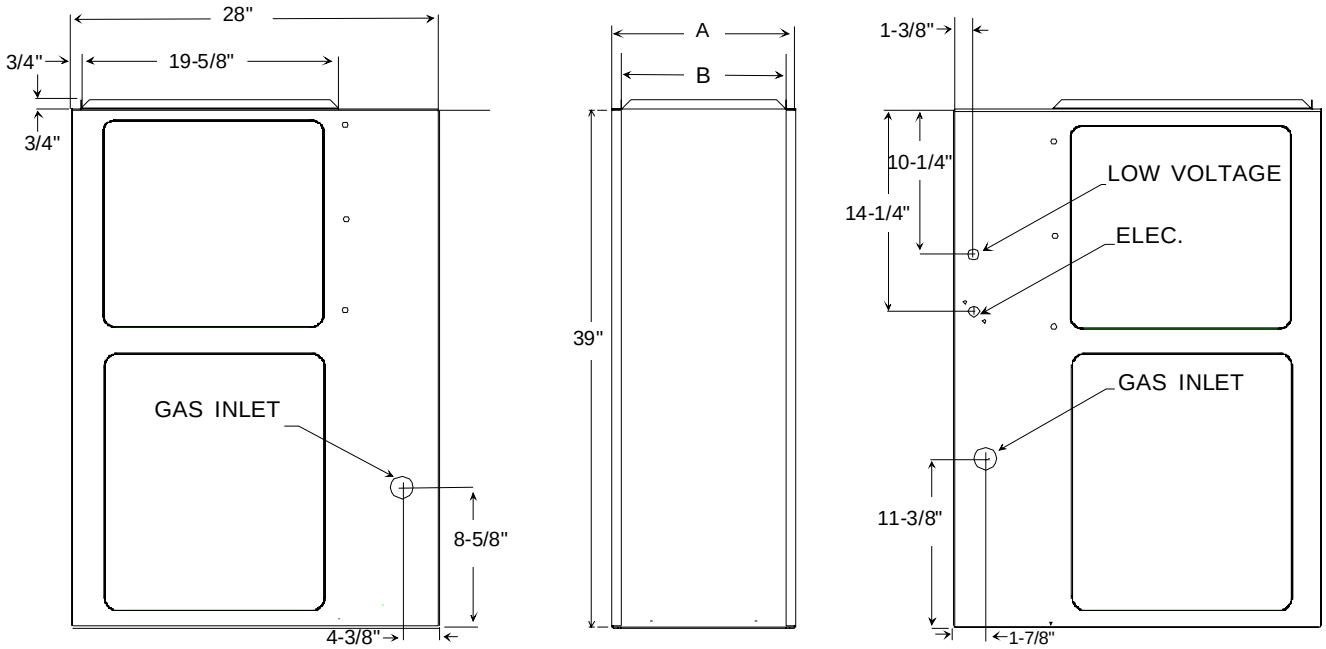

Model Number	A	B	Non Combustible Floor Base
GDT045-3* GDT070-3*	14"	12-1/2"	SBT14
GDT090-4*	17-1/2"	16"	SBT17
GDT115-5*	21"	19-1/2"	SBT21

MINIMUM CLEARANCES TO COMBUSTIBLE MATERIALS (INCHES)					
Sides	Rear	Front*	Vent**		Top
			SW	B	
1	0	3	6	1	1

*36" clearance for serviceability recommended.
**Single Wall Vent (SW) to be used only as a connector. Refer to the venting tables outlined in the Installation Manual for additional venting requirements.

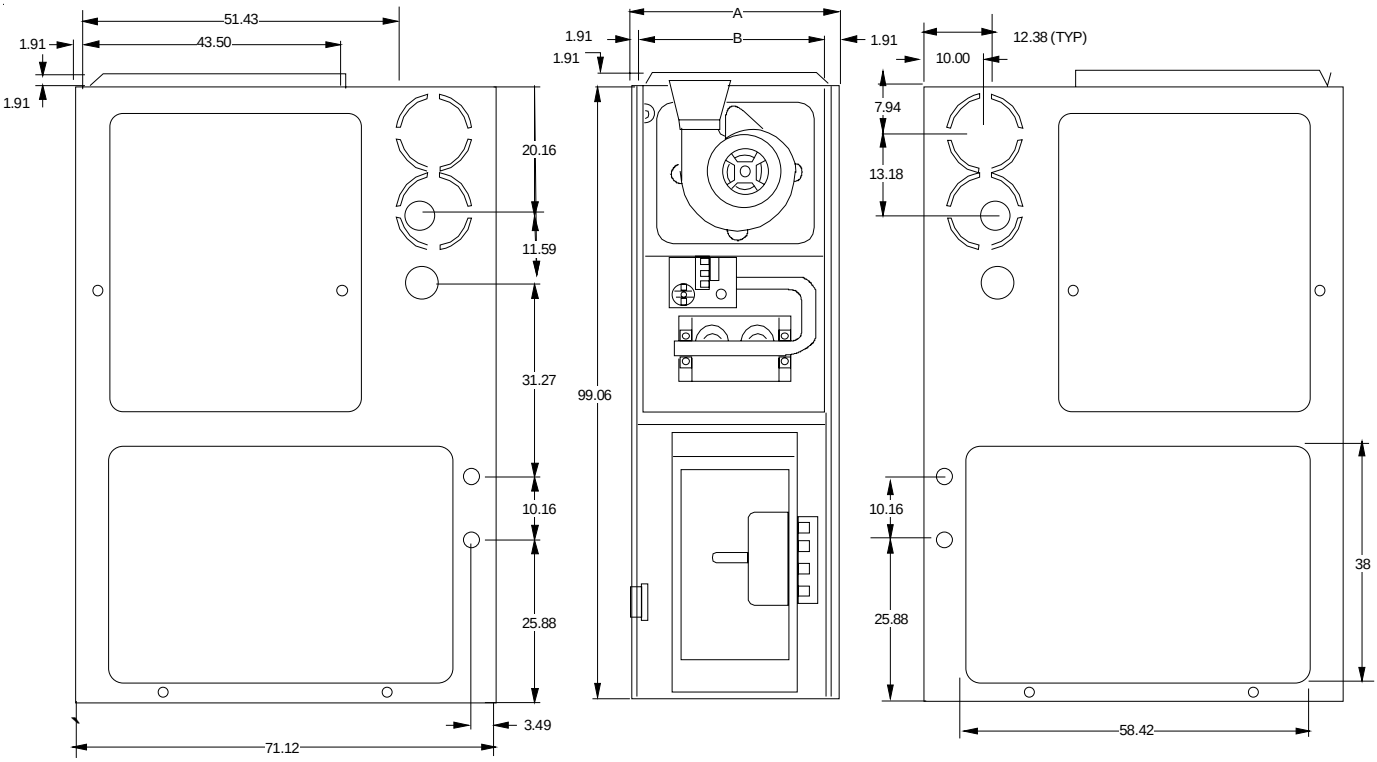

Model Number	A	B	Non Combustible Floor Base
GMP050-32 GMP075-32	14"	12-1/2"	SBM14
GMP100-42	17-1/2"	16"	SBM17
GMP125-52	21.0"	19.5"	SBGM21
GMP150-52	25	23	SBM24

MINIMUM CLEARANCES TO COMBUSTIBLE MATERIALS (INCHES)						
Sides	Rear	Front*	Vent**		Top	
			SW	B	Horizontal	Upflow
1	0	3	6	1	8	1

*36" clearance for serviceability recommended.
**Single Wall Vent (SW) to be used only as a connector. Refer to the venting tables outlined in the Installation Manual for additional venting requirements.

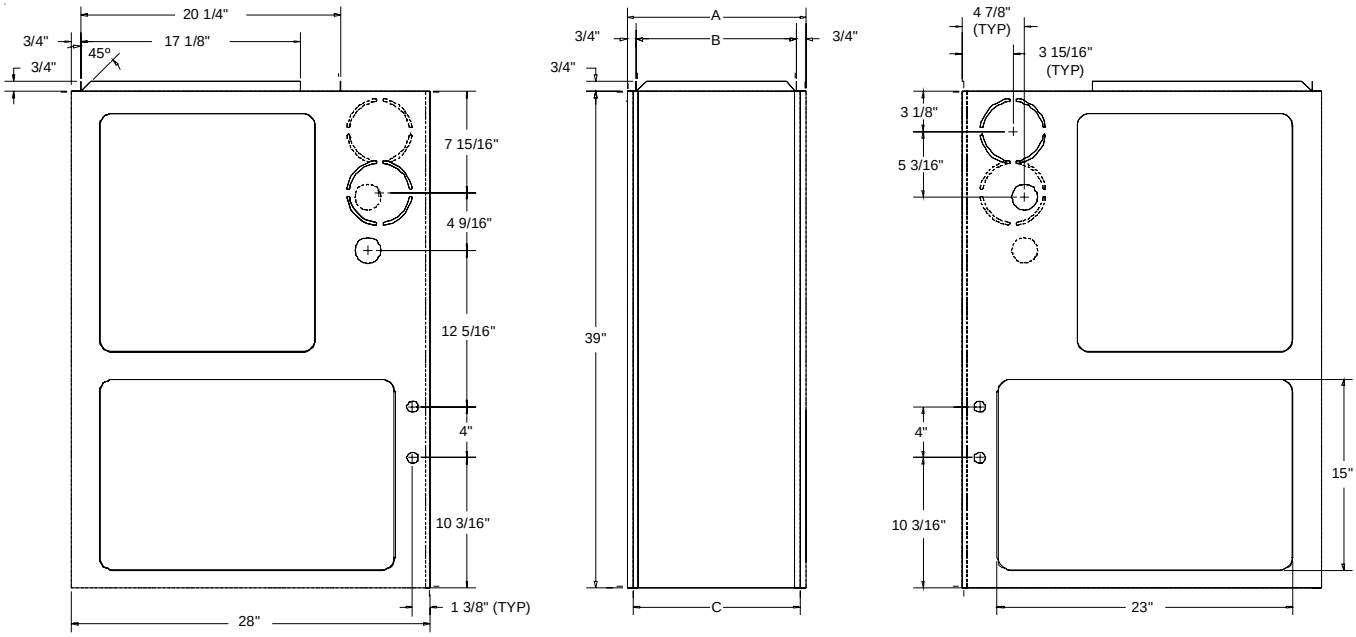

Model Number	A	B	C	Non Combustible Floor Base
GMPE075-3	17.5"	16.0"	16.0"	SBM17
GMPE100-4 GMPE125-5	21.0"	19.5"	19.5"	SBM21

MINIMUM CLEARANCES TO COMBUSTIBLE MATERIALS (INCHES)					
Sides	Rear	Front*	Vent**		Top
			SW	B	
1	0	3	6	1	1

*36" clearance for serviceability recommended.
**Single Wall Vent (SW) to be used only as a connector. Refer to the venting tables outlined in the Installation Manual for additional venting requirements.

MAINTENANCE

WARNING

HIGH VOLTAGE
DISCONNECT ALL POWER BEFORE SERVICING OR INSTALLING THIS UNIT. MULTIPLE POWER SOURCES MAY BE PRESENT. FAILURE TO DO SO MAY CAUSE PROPERTY DAMAGE, PERSONAL INJURY OR DEATH.

MAIN BURNER ADJUSTMENT

1. The main burners should not need adjustment in most instances. However, burner air shutters on some models are provided should adjustment be necessary. After the furnace has been in operation for at least five (5) minutes loosen the air shutter locking screws and close the shutter until yellow tipped flames appear. Slowly open the shutter until the yellow disappears. Retighten the locking screw.

MOTOR LUBRICATION AND MAINTENANCE

1. The circulating air blower is equipped with bearings that are permanently lubricated by the motor manufacturer and require no lubrication. At the time of the monthly filter inspection clean the exterior of the circulating motor, especially around the perimeter air holes to prevent the possibility of overheating due to an accumulation of dust or dirt on the windings and motor casing. Dirty filters will restrict the air flow over the motor windings and possibly cause an overheating condition.
2. The induced draft vent motors are prelubricated by the motor manufacturer and require no attention.

INSPECTING / CLEANING HEAT EXCHANGERS

NOTE: It is the obligation of the installer to advise the user to have the furnace inspected and cleaned annually. To clean the heat exchanger perform the following:

1. Adjust the room thermostat to its lowest setting.
2. Turn off the gas and electric supply to the furnace.

WARNING

DISCONNECT GAS AND ELECTRICAL POWER SUPPLY.

3 Remove the access control door.
4. Disconnect the gas supply line attached to the gas valve.
5. Remove the wire connected to the gas valve.
6. Remove the burner box assembly. Care must be exercised to avoid damage to any components.
7. Inshot burners should not require cleaning. However, if they exhibit signs of corrosion they can be cleaned by brushing with a stiff wire brush.
8. Remove the vent from the furnace venter blower.
9. Remove the venter blower and collector box.
10. With a stiff wire brush on a flexible handle and remove any loose scale from the heat exchanger at both the flue and burner openings.
11. With a vacuum remove any loose scale dislodged and any additional debris found in the heat exchanger.
12. Visually inspect the heat exchanger cells for any failures using a bright light. **If any failures are discovered it is important to disable the furnace and notify the end user that it remains inoperable until repairs are implemented.**
13. Reassemble the furnace in the reverse order. Note: No additional screws or wires are supplied. All components must be reassembled to avoid an unsafe condition.
14. Reconnect gas supply and check for leaks using a soap solution. If a flexible gas line is used examine it for cracks or weakness. Replace if necessary.
15. Restore electrical power.

WARNING

LINE VOLTAGE NOW PRESENT

16. Follow the lighting instructions to place the furnace into operation.

AIR FILTERS

WARNING

DISCONNECT ELECTRICAL POWER SUPPLY.

1. Prior to inspecting air filters, turn off the electric supply to the appliance. Instructions for replacing filters can be found in the Installation and Operating Instructions. **Do not operate the furnace without air filters in place.**
2. Inspect filters monthly. Failure to change air filters regularly can result in permanent damage to the circulating blower motor and adversely effect the furnace performance.

MAINTENANCE

IGNITION SYSTEM

WARNING

DISCONNECT ELECTRICAL POWER SUPPLY.

1. Integrated control boards are not field servicable.
2. Check for tight wire connections on the integrated control board.
3. Turn off electrical power to furnace before tightening any electrical connections.

VENT AND COMBUSTION AIR INSPECTION

1. Check that the vent and vent connector are securely attached to the furnace and show no signs of deterioration or sagging.
2. Check for leaks around the fittings or joints.
3. Check for proper vent pipe clearance from combustible materials. Check vent pipe for proper venting to the outside of the structure. Follow all local code requirements for proper vent piping, termination and required clearances.

DRAIN SYSTEM (Condensing Furnaces Only)

1. Inspect the drain system during the normal monthly filter change. Any blockages should be corrected to insure proper operation of the furnace.

GENERAL FURNACE INSPECTION

The preceding sections cover specific areas of maintenance; however, on a regular basis the following should be inspected:

1. Return air connection(s) must be sealed to the furnace and terminate outside the furnace room.
2. The return air plenum(s) must be free of holes or other openings and show no signs of distortion.
3. The seal between the furnace and the base or flooring to which the furnace is mounted should show no signs of deterioration, sags, cracks or gaps and must provide a definite seal between the base or flooring and the furnace.

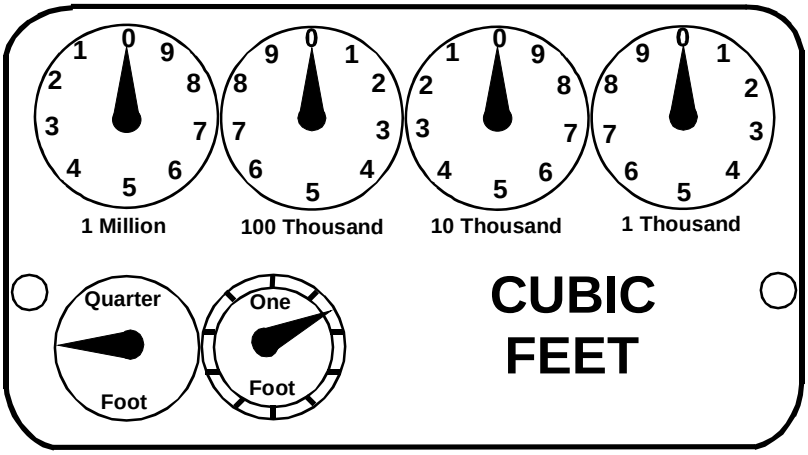

GAS RATE -- CUBIC FEET PER HOUR

Seconds for One Revolution	Size of Test Dial 1/4 cu/ft	1/2 cu/ft	1 cu/ft	2 cu/ft	5 cu/ft	Seconds for One Revolution	Size of Test Dial 1/4 cu/ft	1/2 cu/ft	1 cu/ft	2 cu/ft	5 cu/ft
10	90	180	360	720	1800	36	25	50	100	200	500
11	82	164	327	655	1636	37	--	--	97	195	486
12	75	150	300	600	1500	38	23	47	95	189	474
13	69	138	277	555	1385	39	--	--	92	185	462
14	64	129	257	514	1286	40	22	45	90	180	450
15	60	120	240	480	1200	41	--	--	--	176	439
16	56	113	225	450	1125	42	21	43	86	172	429
17	53	106	212	424	1059	43	--	--	--	167	419
18	50	100	200	400	1000	44	--	41	82	164	409
19	47	95	189	379	947	45	20	40	80	160	400
20	45	90	180	360	900	46	--	--	78	157	391
21	43	86	171	343	857	47	19	38	76	153	383
22	41	82	164	327	818	48	--	--	75	150	375
23	39	78	157	313	783	49	--	--	--	147	367
24	37	75	150	300	750	50	18	36	72	144	360
25	36	72	144	288	720	51	--	--	--	141	355
26	34	69	138	277	692	52	--	--	69	138	346
27	33	67	133	265	667	53	17	34	--	136	340
28	32	64	129	257	643	54	--	--	67	133	333
29	31	62	124	248	621	55	--	--	--	131	327
30	30	60	120	240	600	56	16	32	64	129	321
31	--	--	116	232	581	57	--	--	--	126	316
32	28	56	113	225	563	58	--	31	62	124	310
33	--	--	109	218	545	59	--	--	--	122	305
34	26	53	106	212	529	60	15	30	60	120	300
35	--	--	103	206	514						

GAS HEATING - SERVICE ANALYSIS GUIDE

Complaint	No Heat			Unsatisfactory Heat						Test Method Remedy	See Service Procedure Reference
POSSIBLE CAUSE DOTS IN ANALYSIS GUIDE INDICATE "POSSIBLE CAUSE" SYMPTOM	System Will Not Start	Burner Won't Ignite	Burner Ignites-Locks Out	Burner Shuts Off prior to T'Stat being Satisfied	Short Cycles	Long Cycles	Soot and /or Fumes	Too Much Heat	Not Enough Heat		
Power Failure	●									Test Voltage	S-1
Blown Fuse	●									Test Voltage	S-4
Loose Connection	●									Check Wiring	S-2
Shorted or Broken Wires	●									Check Wiring	S-3
No Low Voltage	●									Check Transformer	S-4
Faulty Thermostat	●				●	●		●		Check Thermostat	S-3
Faulty Transformer	●									Check Transformer	S-4
Poor or High Resistance Ground			●							Measure Ground Resistance	S-13
Improper Heat Anticipator Setting					●	●		●	●	Adjust Heat Anticipator Setting	S-3
Improper Thermostat Location					●	●		●	●	Relocate Thermostat	
Faulty Limit or Roll Out Switch		●		●						Test Control	S-5 & 7
Faulty Flame Sensor			●							Test Flame Sensor	S-14
Faulty Ignition Control		●	●							Test Control	S-13
Gas Valve or Gas Supply Shut Off		●								Turn Valves to On Position	S-11
Faulty Induced Draft Blower		●					●			Test Blower	S-9
Broken or Shorted Ignitor		●								Test Ignitor	S-12
Dirty Flame Sensor, Low uA			●							Clean Flame Sensor	S-14
Flame Sensor not in Flame, Low uA			●							Test/Adjust Position of Flame Sensor	S-14
Faulty Gas Valve		●					●		●	Replace Gas Valve	S-11
Open Auxiliary Limit		●		●						Reset Control	S-6
Improper Air Flow or Distribution				●					●	Check Duct Static	S-21
Cycling on Limit				●	●				●	Check Controls & Temperature Rise	S-5 & 22
Delayed Ignition							●			Test for Delayed Ignition	S-19
Flashback							●			Test for Flashback	S-20
Orifice Size							●	●	●	Check Orifices	S-16
Gas Pressure		●					●	●	●	Check Gas Pressure	S-18
Cracked Heat Exchanger							●			Check Burner Flames	S-15
Stuck Gas Valve		●					●	●		Replace Gas Valve	S-11
Furnace Undersized									●	Replace with Proper Size Furnace	
Faulty Pressure Switch		●	●	●						Test Pressure Switch	S-8
Blocked or Restricted Flue							●			Check Flue/Drawdown Pressure	S-8
Open Roll Out Switch		●	●							Test Control	S-7
Bouncing On Pressure Switch			●							Test Negative Pressure	S-8

SERVICING

SERVICING SECTION INDEX

S-1 Checking Voltage 33
S-2 Checking Wiring 33
S-3A Thermostat and Wiring 33
S-3B Heating Anticipator 34
S-3C Cooling Anticipator 34
S-4 Checking Transformer and Control Circuit 34
S-5 Checking Primary Limit Control 37
S-6 Checking Auxiliary Limit Control 38
S-7 Checking Flame Rollout Control 39
S-8 Checking Pressure Control 41
S-9 Checking Air Circulator Blower Motor or Induced Draft Blower Motor 44
S-9A Checking Variable Speed Air Circulator Blower Motor 44
S-10 Checking Capacitor 48
S-10A Resistance Check 49
S-11 Checking Gas Valve 49
S-12 Checking Hot Surface Ignitor 50
S-13 Checking Integrated Ignition Controls 50
S-14 Checking Flame Sensor 56
S-15 Checking Main Burners 57

SERVICING

S-1 CHECKING VOLTAGE

WARNING

HIGH VOLTAGE
DISCONNECT ALL POWER BEFORE SERVICING OR INSTALLING THIS UNIT. MULTIPLE POWER SOURCES MAY BE PRESENT. FAILURE TO DO SO MAY CAUSE PROPERTY DAMAGE, PERSONAL INJURY OR DEATH.

1. Remove the burner door on 80% furnace or blower compartment door on 90% furnace to gain entry to Junction Box.
2. Remove cover from Junction Box and gain access to incoming power lines.

With Power ON:

WARNING

LINE VOLTAGE NOW PRESENT

3. Using a voltmeter, measure the voltage across the hot and neutral connections.

NOTE: To energize the furnace, the Door Interlock Switch must be engaged at this point.

4. No reading - indicates open wiring, open fuse, no power, or etc. from unit to fused disconnect service. Repair as needed.
5. With ample voltage at line voltage connectors, energize the furnace blower motor by jumpering terminals R to G on the integrated ignition control.
6. With the blower motor in operation, the voltage should be 115 volts ± 10 percent.
7. If the reading falls below the minimum voltage, check the line wire size. Long runs of undersized wire can cause low voltage. If wire size is adequate, notify the local power company of the condition.
8. After completing check and/or repair, replace Junction Box cover and reinstall burner compartment door on 80% or blower compartment door on 90% furnace.
9. Turn on electrical power and verify proper unit operation.

S-2 CHECKING WIRING

WARNING

DISCONNECT ELECTRICAL POWER SUPPLY.

1. Check wiring visually for signs of overheating, damaged insulations and loose connections.
2. Using an ohmmeter to check continuity of any suspected open wires.
3. If any wires must be replaced, replace with AWM, 105°C. 4/64 thick insulation of the same gauge or its equivalent.

S-3 CHECKING THERMOSTAT, WIRING AND ANTICIPATOR

S-3A Thermostat and Wiring

WARNING

DISCONNECT ELECTRICAL POWER SUPPLY.

1. Remove the blower compartment door to gain access to the thermostat low voltage wires located at the furnace integrated control module terminals.
2. Remove the thermostat low voltage wires at the furnace control panel terminal board.
3. Jumper terminals R to W (W1 and W2) on the integrated ignition control.

With Power On (and Door Interlock Switch closed):

WARNING

LINE VOLTAGE NOW PRESENT

4. Induced Draft Motor must run and pull in pressure switch.
5. If the hot surface ignitor heats and at the end of the this ignitor warm-up period the gas valve opens and the burners ignite, the trouble is in the thermostat or wiring.
6. With power off, check the continuity of the thermostat and wiring. Repair or replace as necessary.

If checking the furnace in the air conditioning mode, proceed as follows.

7. With power off, Jumper terminals R to Y to G.
8. Turn on the power.
9. If the furnace blower motor starts and the condensing unit runs, then the trouble is in the thermostat or wiring. Repair or replace as necessary.
10. After completing check and/or repair of wiring and check and/or replacement of thermostat, reinstall blower compartment door.
11. Turn on electrical power and verify proper unit operation.

S-3B Heating Anticipator

The heating anticipator is a wire wound adjustable heater which is energized during the "ON" cycle to help prevent overheating of the conditioned space.

The anticipator is a part of the thermostat and if it should fail for any reason, the thermostat must be replaced.

SERVICING

The heating anticipator setting for furnaces covered in this manual is **0.70 Amps**.

If the anticipator current draw is unknown, then an amp draw should be taken to determine the anticipator setting. Use an amprobe as shown in the following drawing.

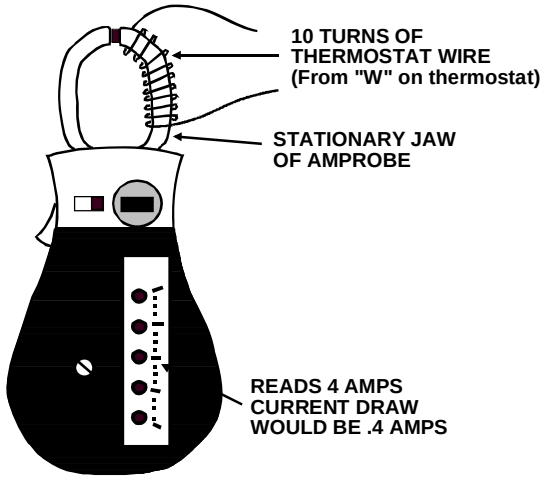

Checking Heating Anticipator Current (Amp) Draw

S-3C Cooling Anticipator

The cooling anticipator is a small heater (resistor) in the thermostat. During the "OFF" cycle it heats the bimetal element helping the thermostat call for the next cooling cycle. This prevents the room temperature from rising too high before the system is restarted. A properly sized anticipator should maintain room temperature within 1 1/2 to 2 degrees range.

The anticipator is fixed in the subbase and is not to be replaced. If the anticipator should fail for any reason, the subbase must be changed.

S-4 CHECKING TRANSFORMER AND CONTROL CIRCUIT

A step-down transformer 120 volt primary to 24 volt secondary, 40 VA (Heating and Cooling Models) supplies ample capacity of power for either operation.

⚠ WARNING

HIGH VOLTAGE
DISCONNECT ALL POWER BEFORE SERVICING OR INSTALLING THIS UNIT. MULTIPLE POWER SOURCES MAY BE PRESENT. FAILURE TO DO SO MAY CAUSE PROPERTY DAMAGE, PERSONAL INJURY OR DEATH.

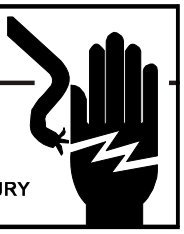

1. Remove blower compartment door to gain access to the thermostat low voltage wires located at the furnace integrated control module.
2. Remove the thermostat low voltage wires at the furnace integrated control module terminals.

With Power On (and Door Interlock Switch closed):

5. Check transformer primary voltage at incoming line voltage connections, fuse, splices, and blower door interlock switch.
6. If line voltage is available to the primary side of transformer and not at secondary side, the transformer is inoperative. Replace.
7. After completing check and/or replacement of transformer and check and/or repair of control circuit, reinstall blower compartment door.
8. Turn on electrical power and verify proper unit operation.

S-5 CHECKING PRIMARY LIMIT CONTROL

The 80% furnaces use nonadjustable, automatic reset, primary limits part # B13701(87-99) and B13709*. The illustration below shows how to test limit controls. See the following note BEFORE replacing the limit control.

NOTE: The following service problems could cause the primary limit to open up and should be checked first:

1. **Low air flow.** Check for dirty evaporator coil, dirty blower wheel, blower motor not running or turning too slow, high duct static pressure (duct system undersized), high static air filters, return air duct or return grilles undersized.

⚠ WARNING

DISCONNECT ELECTRICAL POWER SUPPLY.

1. Remove burner compartment door to gain access to the primary limit.
2. Remove low voltage wires at limit control terminals.
3. With an ohmmeter, test between these two terminals as shown in the following drawing. Should read continuous unless heat exchanger temperature is above limit control setting. If not as above, replace the control.

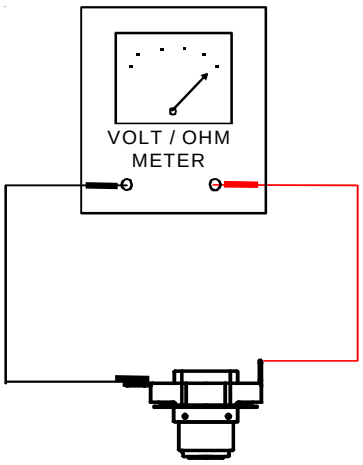

SERVICING

4. After completing check and/or replacement of primary limit control, reinstall burner compartment door.
5. Turn on electrical power and verify proper unit operation.

As shown in the following drawing, limit control should read continuous unless the heat exchanger temperature is above limit control setting. If not as above, replace the control

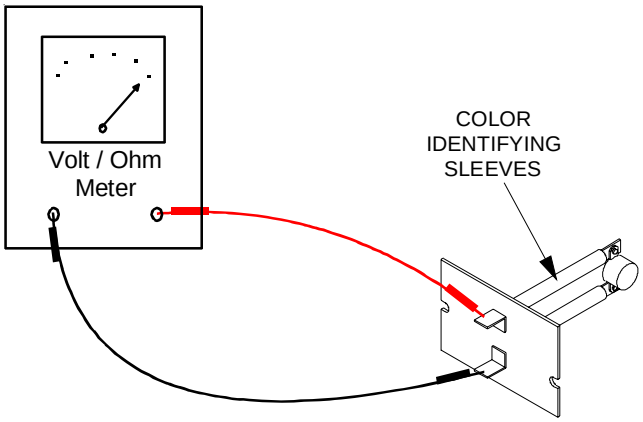

Testing Primary Limit Control

(GMP, GMPN Furnaces)

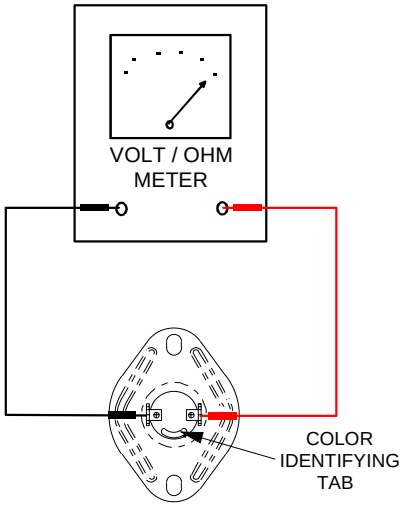

Testing Primary Limit Control

(GMNT, GMT Furnaces)

6. After completing check and/or replacement of primary limit control, reinstall burner compartment door.
7. Turn on electrical power and verify proper unit operation.

To aid in identifying these controls, refer to the following *Primary Limit Charts* for temperature setting and length specifications.

SERVICING

80% Primary Limit (GDT - GMT - GMTH)											
Part Number	B1370187	B1370190	B1370191	B1370192	B1370193	B1370194	b1370195	B1370196	B1370919	B1370920	B1370921
Open Setting °F	160	210	220	230	240	250	300	320	170 F	180 F	240 F
Length (Inches)	3"	3"	3"	3"	3"	3"	3"	3"	7"	7"	7"
GDT 045-3*	---	---	---	---	---	---	1	---	---	---	---
GDT 070-3*	---	---	---	---	1	---	---	---	---	---	---
GDT 090-4*	---	---	---	---	---	1	---	---	---	---	---
GDT 115-5*	---	---	1	---	---	---	---	---	---	---	---
GMT 045-3*	---	---	---	---	---	---	1	---	---	---	---
GMT 070-3*	---	---	---	---	---	---	---	---		1	---
GMT 070-4*	---	---	---	---	---	---	---	---	1	---	---
GMT 090-3*	---	1	---	---	---	---	---	---	---	---	---
GMT 090-4*	---	1	---	---	---	---	---	---	---	---	---
GMT 090-5*	---	---	---	---	---	---	---	1	---	---	---
GMT 115-5*	---	---	1	---	---	---	---	---	---	---	---
GMT 135-5*	1	---	---	---	---	---	---	---	---	---	---
GMT 140-5*	1	---	---	---	---	---	---	---	---	---	---
GMTH 045-3*	---	---	---	1	---	---	---	---	---	---	---
GMTH 070-4*	---	---	---	---	---	---	---	---	---	---	1
GMTH 090-5*	---	---	---	---	1	---	---	---	---	---	---
GMTH 115-5*	---	---	---	---	---	---	1	---	---	---	---

80% Primary Limit (GMP - GMPE - GMPH - GPD)									
Part Number	B1370902	B1370903	B1370905	B1370908	B1370910	B1370911	B1370912	B1370914	B1370915
Open Setting °F	210	240	290	160	170	220	240	220	230
Length (Inches)	3"	3"	3"	7"	7"	3"	7"	7"	3"
GMP 050-3*	---	---	---	---	---	---	1	---	---
GMP 075-3*	---	---	---	1	---	---	---	---	---
GMP 075-4*	---	---	---	---	---	1			
GMP 100-3*	---	---	1	---	---	---	---	---	---
GMP 100-4*	---	---	1	---	---	---	---	---	---
GMP 100-5*		1	---	---	---	---	---	---	---
GMP 125-4*	1	---	---	---	---	---	---	---	---
GMP 125-5*	---	---	---	---	---	---	1	---	---
GMP 150-5*	---	---	---	---	---	---	---	1	---
GMPE 075-3*	---	---	---	---	1	---	---	---	---
GMPE 100-4*	---	---	---	---	---	---	1	---	---
GMPE 125-5	---	---	---	1	---	---	---	---	---
GMPH 050-3*	---	1	---	---	---	---	---	---	---
GMPH 075-3*	---	1	---	---	---	---	---	---	---
GMPH 080-5*	---	---	---	---	1	---	---	---	---
GMPH 120-5*	---	---	---	---	---	---	---	1	---
GPD 050-3*	---	---	---	---	---	---	1	---	---
GPD 075-3*	1	---	---	---	---	---	---	---	---
GPD 100-4*	---	---	---	---	---	---	---	---	1
GPD 125-4*	---	---	---	---	---	1	---	---	---

SERVICING

90% Primary Limit								
Part Number	B1370187	B1370188	B1370189	B1370190	B1370906	B1370908	B1370909	B1370910
Open Setting °F	160	170	200	210	150	160	160	170
Length (Inches)	3"	3"	3"	3"	7"	7"	3"	7"
GMPN 040-3*	---	---	---	---	1	---	---	---
GMPN 060-3*	---	---	---	---	---	1	---	---
GMPN 080-4*	---	---	---	---	---	1	---	---
GMPN 100-4*	---	---	---	---	---	---	---	1
GMPN 120-5*	---	---	---	---	---	1	---	---
GSM 060-3	---	---	---	---	---	---	1	---
GSM 080-4	---	---	---	---	---	1	---	---
GSM 100-4	---	---	---	---	---	---	---	1
GSMS 060-3	---	---	---	---	---	---	1	---
GSMS 080-3	---	---	---	---	---	1	---	---
GSMS 100-4	---	---	---	---	---	---	---	1
GMNT 040-3*	---	1	---	---	---	---	---	---
GMNT 060-3*	1	---	---	---	---	---	---	---
GMNT 080-4*	---	---	1	---	---	---	---	---
GMNT 100-4*	---	1	---	---	---	---	---	---
GMNT 120-5*	---	1	---	---	---	---	---	---
GMNTE 060-3*	---	1	---	---	---	---	---	---
GMNTE 080-4*	---	1	---	---	---	---	---	---
GMNTE 100-4*	---	---	---	1	---	---	---	---
GMNTE 120-5*	---	---	---	1	---	---	---	---

SERVICING

S-6 CHECKING AUXILIARY LIMIT CONTROL

The auxiliary limit switch (B13701-55) is a safety control that senses high temperature within the furnace or duct work. This control is preset to open at 120°F and close at 90°F. It is not adjustable and automatically resets. The control is located in the blower compartment of the furnace on the blower housing. Auxiliary limits may be on the side or front of the blower housing.

80% Auxiliary Limit	
Part Number	B13701-55
Open Setting °F	120
GDT 045-3*	1
GDT 070-3*	1
GDT 090-4*	1
GDT 115-5*	1
GMP 050-3*	1
GMP 075-3*	1
GMP 075-4*	1
GMP 100-3*	1
GMP 100-4*	1
GMP 100-5*	1
GMP 125-4*	1
GMP 125-5*	1
GMP 150-5*	1
GMPE 075-3*	1
GMPE 100-4*	1
GMPE 125-5*	1
GMPH 050-3*	1
GMPH 075-3*	1
GMPH 080-5*	1
GMPH 120-5*	1
GMT 045-3*	1
GMT 070-3*	1
GMT 070-4*	1
GMT 090-3*	1
GMT 090-4*	1
GMT 090 -5*	1
GMT 115-5*	1
GMT 135-5*	1
GMT 140-5*	1
GMTH 045-3*	1
GMTH 070-4*	1
GMTH 090-5*	1
GMTH115-5*	1
GPD 050-3*	1
GPD 075-3*	1
GPD 100-4*	1
GPD 125-4*	1

90% Auxiliary Limit	
Part Number	B13701-55
Open Setting °F	120
GMPN 040-3*	NA
GMPN 060-3*	NA
GMPN 080-4*	NA
GMPN 100-4*	NA
GMPN 120-5*	NA
GSM 060-3	NA
GSM 080-4	NA
GSM 100-4	NA
GSMS 060-3	NA
GSMS 080-3	NA
GSMS 100-4	NA
GMNT 040-3*	1
GMNT 060-3*	1
GMNT 080-4*	1
GMNT 100-4*	1
GMNT 120-5*	1
GMNTE 060-3*	1
GMNTE 080-4*	1
GMNTE 100-4*	1
GMNTE 120-5*	1

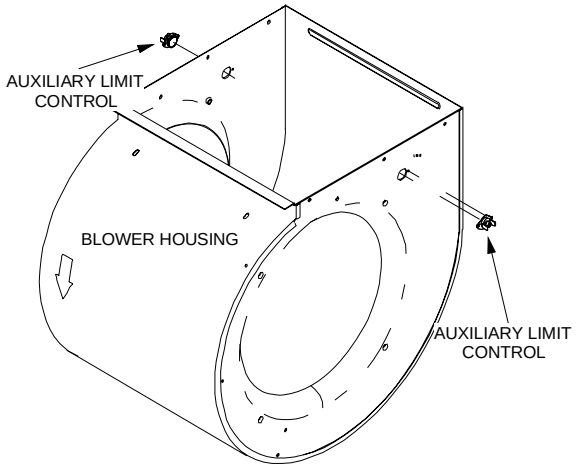

Auxiliary Limit Control Location

(Side location shown)

GMP furnace with the edge card control board is connected in series with the primary limit which connects to the integrated ignition control. Interruption of the circuit will cause a (4) flash code on the control board. These symptoms are identical to a trip of the primary limit control. The air circulation blower will run continuously.

SERVICING

GDP, GDT, GMP, GMPE, GMNT, GMT, GMTH and **GPD** furnaces using the 9-pin connector on the control board is connected in series through the rollout switches. Interruption of the circuit will cause a (1) flash code of ignition failure. If its temperature should be exceeded, it will open, interrupting the voltage to the gas valve causing it to close.

The auxiliary limit control is designed to prevent furnace operation in case of main blower failure. It may also open if the power supply is interrupted while the furnace is firing.

WARNING

HIGH VOLTAGE
DISCONNECT ALL POWER BEFORE SERVICING OR INSTALLING THIS UNIT. MULTIPLE POWER SOURCES MAY BE PRESENT. FAILURE TO DO SO MAY CAUSE PROPERTY DAMAGE, PERSONAL INJURY OR DEATH.

1. Remove blower compartment door to gain access to the auxiliary limit control which is located on the blower housing or on the blower deck.
2. Remove the wires from the auxiliary limit control terminals.
3. Use an ohmmeter, test for continuity across the two terminals (refer to the following auxiliary limit control figure). No reading indicates the control is open.
4. Verify proper operation of blower motor and static pressure of duct system. Problem could be caused by a dirty evaporator coil.

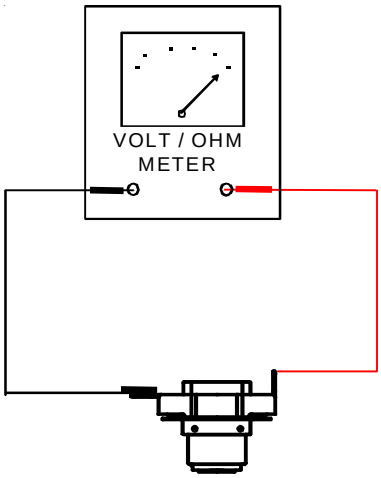

Testing Auxiliary Limit Control

S-7 CHECKING FLAME ROLLOUT CONTROL

A temperature activated manual reset control is mounted to the manifold assembly as shown in the following illustration. Locations of the rollout switch may vary.

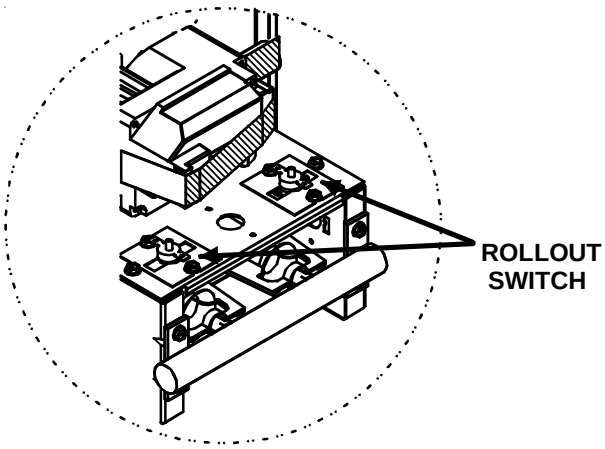

Flame Rollout Switch Location

(80% Upflow Furnace Shown, Downflow Similar)

The control is designed to open should a flame roll out occur. An over firing condition or flame impingement on the heat shield may also cause the control to open.

On some models the ignition control diagnostic light will flash (1) one time indicating a trip of the rollout switch. These symptoms are identical to a trip of the auxiliary limit control.

On other models the ignition controls diagnostic light will flash (4) four times indicating an open primary limit, rollout switch, auxiliary switch or stack overtemp switch open. Check the flash codes for the model you are working on.

The circuit between the ignition control and gas valve will be interrupted when the rollout switch opens up.

Refer to the *Rollout Limit Charts* on the next page for temperature settings and part numbers.

WARNING

LINE VOLTAGE NOW PRESENT

1. Remove the burner compartment door to gain access to the rollout switch(es) mounted to burner bracket.

The servicer should reset the ignition control by opening and closing the thermostat circuit. Then look for the ignitor glowing which indicates there is power to the ignition control. Measure the voltage between each side of the rollout control and ground while the ignition control tries to power the gas valve.

2. Measure the voltage between each side of the rollout control and ground during the ignition attempt. Refer to the following figure.

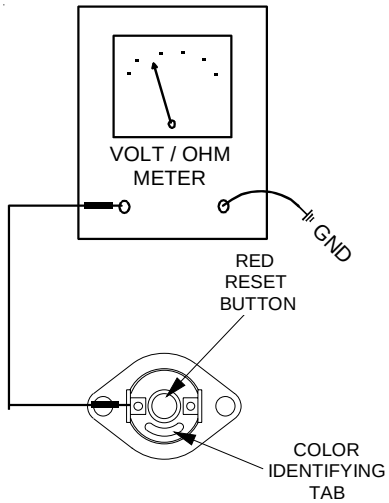

Checking Flame Rollout Switch

(80% & 90% Furnaces)

a. If no voltage is measured on either side of control it indicates ignition control or wiring to control problem.

b. If voltage is measured on one side of the control and not the other it indicates the control is open.

c. If voltage is measured on both sides of the control the wiring to gas valve or valve is a fault.

3. After check and/or replacement of rollout switch, reinstall burner compartment door and verify proper unit operation.

80% Rollout Limit		
Part Number	B13701-45	B1370154
Open Setting °F	300	350 F
GDT 045-3*	1	---
GDT 070-3*	1	---
GDT 090-4*	1	---
GDT 115-5*	1	---
GMP 050-3*	---	4
GMP 075-3*	---	4
GMP 075-4*	---	4
GMP 100-3*	---	4
GMP 100-4*	---	4
GMP 100-5*	---	4
GMP 125-4*	---	4
GMP 125-5*	---	4
GMP 150-5*	---	4
GMPE 075-3*	---	4
GMPE 100-4*	---	4
GMPE 125-5*	---	4
GMPH 050-3*	---	4
GMPH 075-3*	---	4
GMPH 080-5*	---	4
GMPH 120-5*	---	4
GMT 045-3*	2	---
GMT 070-3*	2	---
GMT 070-4*	2	---
GMT 090-3*	2	---
GMT 090-4*	2	---
GMT 090-5*	2	---
GMT 115-5*	2	---
GMT 135-5*	2	---
GMT 140-5*	2	---
GMTH 045-3*	2	---
GMTH 070-4*	2	---
GMTH 090-5*	2	---
GMTH 115-5*	2	---
GPD 050-3*	---	1
GPD 075-3*	---	1
GPD 100-4*	---	1
GPD 125-4*	---	1

90% Rollout Limit		
Part Number	B13701-45	B1370154
Open Setting °F	300	350 F
GMPN 040-3*	4	---
GMPN 060-3*	4	---
GMPN 080-4*	4	---
GMPN 100-4*	4	---
GMPN 120-5*	4	---
GSM 060-3	---	2
GSM 080-3	---	2
GSM 100-4	---	2
GSMS 060-3	---	2
GSMS 080-4	---	2
GSMS 100-4	---	2
GMNT 040-3*	4	---
GMNT 060-3*	4	---
GMNT 080-4*	4	---
GMNT 100-4*	4	---
GMNT 120-5*	4	---
GMNTE 060-3*	4	---
GMNTE 080-4*	4	---
GMNTE 100-4*	---	4
GMNTE 120-5*	4	---

S-8 CHECKING PRESSURE CONTROL

The pressure control is a safety device to prevent the combustion cycle from occurring with inadequate venting caused by a restricted or blocked vent pipe on the 80% and 90% furnaces.

WARNING

HIGH VOLTAGE
DISCONNECT ALL POWER BEFORE SERVICING OR INSTALLING THIS UNIT. MULTIPLE POWER SOURCES MAY BE PRESENT. FAILURE TO DO SO MAY CAUSE PROPERTY DAMAGE, PERSONAL INJURY OR DEATH.

1. Remove burner compartment door to gain access to pressure switch(es).
2. Remove wires from the pressure switch(es) electrical terminals.
3. Using a VOM check from common terminal to NC (Normally Closed) - should read closed. Check from Common to NO (Normally Open) - should read open.

If switch reads as above proceed to Step 4, otherwise replace control.

4. Remove the pressure control hose from the control and interconnect with an inclined manometer as shown in the following figures.

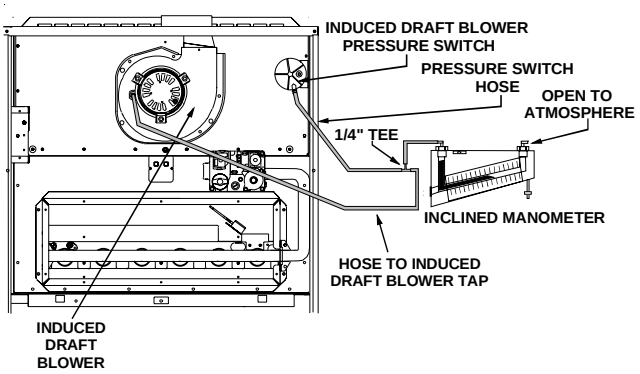

ID Blower Pressure Switch

Negative Pressure Measurement

(80% Furnace shown for illustration purposes)

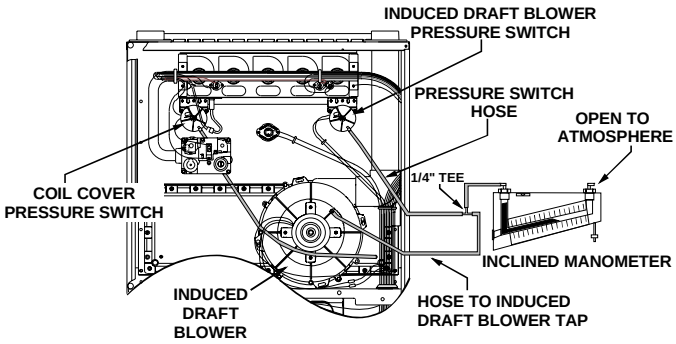

ID Blower Pressure Switch

Negative Pressure Measurement

(90% Furnace shown for illustration purposes)

Reconnect pressure switch electrical wires.

WARNING

LINE VOLTAGE NOW PRESENT

4. Energize furnace for heating cycle. The induced draft blower motor will begin to run. The inclined manometer should read a negative pressure.
5. Remove and check the two electrical wires and using the VOM check from Common to NC (Normally Closed) - should read open. Check from Common to NO (Normally Open) - should read closed. If not as above, replace control.
6. Reconnect wires to the control and place in a heating cycle.

NOTE: See the following pages for the pressure switch trip points and usage charts.

SERVICING

PRESSURE SWITCH TRIP POINTS AND USAGE CHART				
MODEL	Trip Point Inches Water Column (" w.c.)			
	0 to 8,000 ft.			
	Low Fire Negative Pressure	Part #	High Fire Negative Pressure	Part #
GSM 060-3	-0.38	B13701-57	-1.40	B13701-56
GSM 080-4 GSM 100-4	-0.38	B13701-57	-1.10	B13701-59

PRESSURE SWITCH TRIP POINTS AND USAGE CHART			
MODEL	Trip Point Inches Water Column (" w.c.)		
	0 to 8,000 ft.		
	Low Fire Negative Pressure	High Fire Negative Pressure	Part #
GMNTE 060-3*	-0.60	-1.25	B13702-01
GMNTE 080-4*	-0.55	-0.95	B13702-04
GMNTE 100-4*	-0.35	-0.85	B13702-02
GMNTE 120-5*	-0.40	-0.75	B13702-03

PRESSURE SWITCH TRIP POINTS AND USAGE CHART		
MODEL	Trip Point Inches Water Column (" w.c.)	
	0 to 8,000 ft.	
	Negative Pressure	Part #
GMT/GMTH/GDT 045-3* GMT/GMTH/GDT 070-3* GMT 070-4* GMT 090-3* GMT/GDT 090-4*	-0.60	B13701-42
GMT/GMTH 090-5* GMT/GDT 115-5*	-0.70	B13701-58
GMTH 115-5*	-0.85	B13701-50
GMT 140-5*	-0.75	B13701-79

PRESSURE SWITCH TRIP POINTS AND USAGE CHART		
MODEL	Trip Point Inches Water Column (" w.c.)	
	0 to 8,000 ft.	
	Negative Pressure	Part #
GSMS 060-3 / 080-4 / 100-4	-0.38	B13701-57
GMPN/GMNT 040-3* GMPN 060-3*	-1.19	B13701-48
GMNT 060-3* GMPN 080-4* GMPN/GMNT 100-4* GMPN 120-5*	-0.85	B13701-50
GMNT 080-4*	-1.10	B13701-59
GMNT 120-5*	-0.75	B13701-79

PRESSURE SWITCH TRIP POINTS AND USAGE CHART		
MODEL	Trip Point Inches Water Column (" w.c.)	
	0 to 8,000 ft.	
	Negative Pressure	Part #
GMP/GMPH/GPD 050-3* GMPH 080-5 GMP 100-3* GMP/GMPE/GPD 100-4* GMP 100-5* GMPH 120-5* GMP/GPD 125-4* GMP/GMPE 125-5*	-0.40	B13701-26
GMP/GMPE/GPD 070-3 GMP/GMPH 075-4*	-0.35	B13701-33
GMP 150-5	-0.60	B13701-42

SERVICING

S-9 CHECKING AIR CIRCULATOR BLOWER MOTOR OR INDUCED DRAFT BLOWER MOTOR

WARNING

DISCONNECT ELECTRICAL POWER SUPPLY.

1. Remove blower compartment door to gain access to the circulator blower motor and induced draft blower motor wire leads connected at integrated ignition control.
2. Disconnect the motor wire leads from its connection point at integrated ignition control module and capacitor if applicable.
3. Using and ohmmeter, test for continuity between each of the motor leads.
4. Touch one probe of the ohmmeter to the motor frame (ground) and the other probe in turn to each lead.

If the windings do not test continuous or a reading is obtained to ground, replace the motor.

5. After completing check and/or replacement of circulator blower motor or induced draft blower motor, reinstall blower compartment door.
6. Turn on electrical power and verify proper unit operation.

S-9A CHECKING VARIABLE SPEED AIR CIRCULATOR BLOWER MOTOR

Variable Speed furnaces incorporate the GE© ICM or variable speed blower motors for greater efficiency. ECM/ICM motors vary the motor RPMs to provide a set volume of air over a wide range of conditions. These motors use an electronic control module attached to the motors end bell to control motor operation. Some unique features of these motors are:

1. Constant Airflow. These motors will maintain constant airflow in excess of .80 static. In other words, as the static increases so does the motors RPM so that a constant CFM is maintained.

NOTE: The motor in these units will move more air under higher static conditions than a similar sized unit using a PSC motor. Because this motor does not load up and reduce airflow like a PSC motor, in some undersized duct installations this may cause noise or high airflow complaints.

2. Ramp-up/Ramp-down feature. These motors ramp up and down at the beginning or end of a cycle to reduce air rush noise.
3. High voltage is present at these motors all the time. Motor operation is controlled through the low voltage motor interface board.

ECM/ICM Control Connections

Control functions (G, Y, W, W1, W2) may be active at less than 1/2 control voltage. (i.e. 12 volts). Relay contacts on control functions must reliably switch low currents (less than 5 MA). Some thermostats (with triac switches) and Solid State Relays may allow enough "leakage" current to turn on "G". Thermostats that "steal" power thru "Y" or other functions are not compatible.

The ECM control interface can be as simple as a direct connection to the thermostat. For example: "R" to "G" will cause the fan to come at "Fan-Only" CFM, "R" to "G" to "Y" will cause the fan to come on at Cooling speed and R to G to W will cause the fan to come on at heating speed. The ECM/ICM control requires a common connection from the transformer (transformer common to C1, C2 on control). In typical applications C1 and C2 will be tied together.

Checking ECM/ICM Motors

ECM/ICM motors connect directly to the AC Line Voltage. **DO NOT** insert contactors in series with the ECM/ICM Motor AC Line. The control is powered continuously to insure reliable start-up. The connector plug is polarized, verify and reverify correct connector orientation before applying power. **DO NOT** force plug into motor and make sure power is off before inserting power connector. **DO NOT** apply voltage to terminals 1 or 2.

WARNING

LINE VOLTAGE NOW PRESENT

Check for line voltage on terminals 4 and 5. Verify terminal 3 is ground. terminals. Terminals 1 and 2 are jumpered in the harness for 120VAC operation.

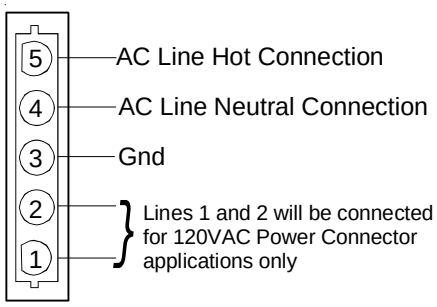

POWER CONNECTOR

(1/2 HP MOTORS)

"Motor Half“

(Viewed from Plug End)

SERVICING

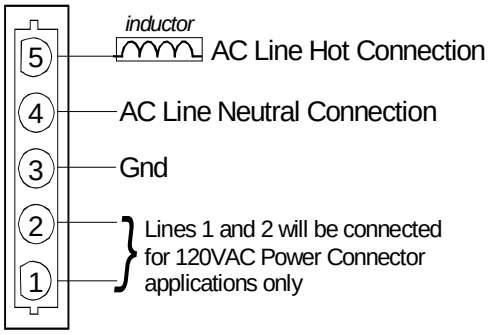

POWER CONNECTOR

(3/4 & 1 HP MOTORS)

"Motor Half“

(Viewed from Plug End)

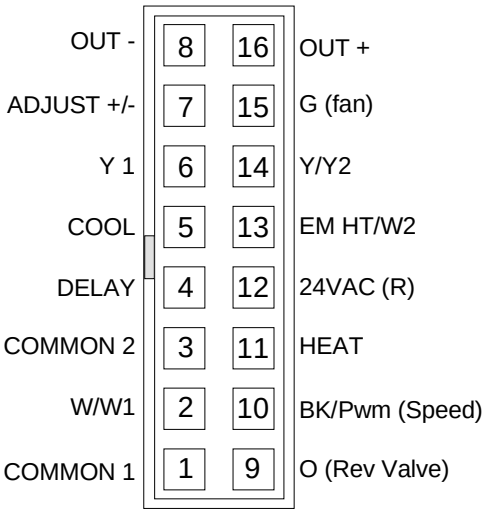

CONTROL CONNECTOR

"Motor Half“

(Viewed from connector end)

CAUTION

HIGH VOLTAGE ON CONTROL PINS WILL DESTROY MOTOR.

Do not apply 24 volts to terminals "Out +" or "Out -".

Make sure connector is fully seated.

Make sure pins are fully seated in connector housing.

Verify C1 and C2 are connected to transformer common.

Verify "R" is connected to transformer hot.

After verifying above connections, motor can be tested by applying 24 volts to control pins. Example: R to G will cause the fan to come at "Fan-Only" CFM, R to G to Y will cause the fan to come on at cooling speed and R to G to W will cause the fan to come on at heating speed.

If motor does not respond as noted, ICM control unit is bad and should be replaced.

Troubleshooting Chart for ECM Variable Speed Air Circulator Blower Motors

Symptom	Fault Description(s)	Possible Causes	Corrective Action	Cautions and Notes
- Motor rocks slightly when starting.	- This is normal start-up for variable speed motor.	----	----	----
- Motor won't start.	- No movement.	- Manual disconnect switch off or door switch open. - Blown fuse or circuit breaker. - 24 Vac wires miswired. - Unseated pins in wiring harness connectors. - Bad motor/control module. - Moisture present in motor or control module.	- Check 230 Vac power at motor. - Check low voltage (24 Vac R to C) at motor. - Check low voltage connections (G, Y, W, R, C) at motor. - Check for unseated pins in connectors on motor harness. - Test with a temporary jumper between R - G. -	- Turn power OFF prior to repair. Wait 5 minutes after disconnecting power before opening motor. - Handle electronic motor/control with care.
	- Motor rocks, but won't start.	- Loose motor mount. - Blower wheel not tight on motor shaft. - Bad motor/control module.	- Check for loose motor mount. - Make sure blower wheel is tight on shaft. - Perform motor/control replacement check, ECM motors only.	- Turn power OFF prior to repair. Wait 5 minutes after disconnecting power before opening motor. - Handle electronic motor/control with care.
- Motor oscillates up & down while being tested off of blower.	- It is normal for motor to oscillate with no load on shaft.	----	----	----
- Motor starts, but runs erratically.	- Varies up and down or intermittent.	- Variation in 230 Vac to motor. - Unseated pins in wiring harness connectors. - Erratic CFM command from "BK" terminal. - Improper thermostat connection or setting. - Moisture present in motor/control module.	- Check line voltage for variation or "sag". - Check low voltage connections (G, Y, W, R, C) at motor, unseated pins in motor harness connectors. - Check-out system controls - Thermostat. - Perform Moisture Check.*	- Turn power OFF prior to repair.
	- "Hunts" or "puffs" at high CFM (speed).	- Incorrect or dirty filter(s). - Incorrect supply or return ductwork. - Incorrect blower speed setting.	- Does removing panel or filter reduce "puffing"? - Check/replace filter. - Check/correct duct restrictions. - Adjust to correct blower speed setting.	- Turn power OFF prior to repair.

***MOISTURE CHECK:**

- Connectors are oriented "down" (or as recommended by equipment manufacturer).
- Arrange harnesses with "drip loop" under motor.
- Is condensate drain plugged?
- Check for low airflow (too much latent capacity).
- Check for undercharged condition.
- Check and plug leaks in return ducts, cabinet.

NOTE: You must use the correct replacement control motor module since they are factory programmed for specific operating modes. Even though they look alike, different modules may have completely different functionality. The ECM variable speed motors are currently the only motors that can have the motor/control module replaced.

IMPORTANT NOTE: Using the wrong motor/control module voids all product warranties and may produce unexpected results.

THIS CHART CONTINUED ON NEXT PAGE

THIS CHART CONTINUED FROM PREVIOUS PAGE

Troubleshooting Chart for ECM Variable Speed Air Circulator Blower Motors

Symptom	Fault Description(s)	Possible Causes	Corrective Action	Cautions and Notes
- Motor starts, but runs erratically.	- Stays at low CFM despite system call for cool or heat CFM.	- 24 Vac wires miswired or loose. - "R" missing/not connected at motor. - Fan in delay mode.	- Check low voltage (Thermostat) wires and connections. - Verify fan is not in delay mode - wait until delay complete. - Perform motor/control replacement check, ECM motors only.	- Turn power OFF prior to repair. Wait 5 minutes after disconnecting power before opening motor. - Handle electronic motor/control with care.
	- Stays at high CFM.	- "R" missing/not connected at motor. - Fan in delay mode.	- Is fan in delay mode? - wait until delay time complete. - Perform motor/control replacement check, ECM motors only.	- Turn power OFF prior to repair. Wait 5 minutes after disconnecting power before opening motor. - Handle electronic motor/control with care.
	- Blower won't shut off.	- Current leakage from controls into G, Y, or W.	- Check for Triac switched t'stat or solid state relay.	- Turn power OFF prior to repair.
- Excessive noise.	- Air noise.	- High static creating high blower speed. - Incorrect supply or return ductwork. - Incorrect or dirty filter(s). - Incorrect blower speed setting.	- Check/replace filter. - Check/correct duct restrictions. - Adjust to correct blower speed setting.	- Turn power OFF prior to repair.
	- Noisy blower or cabinet.	- Loose blower housing, panels, etc. - High static creating high blower speed. - Air leaks in ductwork, cabinets, or panels.	- Check for loose blower housing, panels, etc. - Check for air whistling thru seams in ducts, cabinets or panels. - Check for cabinet/duct deformation.	- Turn power OFF prior to repair.
	- "Hunts" or "puffs" at high CFM (speed).	- High static creating high blower speed. - Incorrect or dirty filter(s). - Incorrect supply or return ductwork. - Incorrect blower speed setting.	- Does removing panel or filter reduce "puffing"? - Check/replace filter. - Check/correct duct restrictions. - Adjust to correct blower speed setting.	- Turn power OFF prior to repair.
- Evidence of Moisture.	- Motor failure or malfunction has occurred and moisture is present.	- Moisture in motor/control module.	- Replace motor and perform Moisture Check.*	- Turn power OFF prior to repair. Wait 5 minutes after disconnecting power before opening motor. - Handle electronic motor/control with care.

***MOISTURE CHECK:**

- Connectors are oriented "down" (or as recommended by equipment manufacturer).
- Arrange harnesses with "drip loop" under motor.
- Is condensate drain plugged?
- Check for low airflow (too much latent capacity).
- Check for undercharged condition.
- Check and plug leaks in return ducts, cabinet.

NOTE: You must use the correct replacement control motor module since they are factory programmed for specific operating modes. Even though they look alike, different modules may have completely different functionality. The ECM variable speed motors are currently the only motors that can have the motor/control module replaced.

IMPORTANT NOTE: Using the wrong motor/control module voids all product warranties and may produce unexpected results.

SERVICING

Replacing ECM™ Control Module

Use the following steps to replace the control module for the GE© variable speed indoor blower motor.

1. You must have the correct replacement module. The controls are factory programmed for specific operating modes. Even though they look alike, different modules may have completely different functionality. Using the wrong control module voids all product warranties and may produce unexpected results.
2. Remove all power from the unit being serviced.

WARNING

HIGH VOLTAGE
DISCONNECT ALL POWER BEFORE SERVICING OR INSTALLING THIS UNIT. MULTIPLE POWER SOURCES MAY BE PRESENT. FAILURE TO DO SO MAY CAUSE PROPERTY DAMAGE, PERSONAL INJURY OR DEATH.

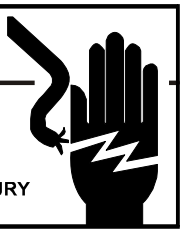

Do **NOT** work on the motor with power applied. Wait at least 5 minutes after disconnecting power from the equipment before opening the motor.

3. It is usually not necessary to remove the motor from the blower assembly. However it is recommended that the whole blower assembly, with the motor, be removed. Unplug the two cable connectors to the motor. There are latches on each connector. Do not pull on the wires. The plugs remove easily when properly released.
4. Observe the flat end of the motor control module casting and located the two standard ¼" hex head bolts. Remove these bolts from the motor while holding the control module. **Do not remove the two torx head screws**.
5. The control module is now free of the motor but still attacked by a plug and cable. Carefully rotate the control so as to gain access to the plug on the end of the cable. Squeeze the release latch and gently pull the plug out of the control module. Do not pull on the wires. Grip the plug only.
6. The control module is now completely detached from the motor. Verify with a standard ohmmeter that the resistance from each motor lead (in the motor plug just removed) to the motor shell is greater than 100k ohms. (Measure resistance to unpainted motor end plate). If any motor lead fails this test do not proceed to install the control module. The motor is defective and must be replaced. Installing the new control module will cause it to fail also.
7. Verify that the replacement control module is correct for your application. If so, orient the new module next to the motor and carefully insert the plug removed in step 5. Be sure the plug latches. It will click when properly inserted.
8. Install the new control module back on the motor being careful to engage the locating pin into the appropriate mating motor hole. Replace the two 1/4" hex head bolts. Tighten the bolts snugly. It is not necessary to overtighten.

Note: Before replacing the blower/motor assembly, it is important to look at the installation to see if some application fault has caused the motor to fail.

Is there any evidence of water damage to the failed control? (Corrosion on the inside or outside of the casting.) If yes, do moisture check.

9. Re-install the blower/motor assembly into the furnace.
10. Plug the 16-pin control plug into the motor. The plug is keyed. Make sure the connector is properly seated and latched.
11. Plug the 5 pin power connector into the motor even though the plug is keyed, observe the proper orientation. Do not force the connector. It plugs in very easily when properly oriented. **Reversing this plug will cause immediate failure of the control module**.
12. Final installation check. Make sure the motor is installed as follows:
    a. As far into the blower housing as possible.
    b. Belly bands not covering vent holes or on the control module.
    c. Motor connectors should oriented as to prevent the accumulation of moisture in the control.
    d. Use wire ties to create a drip loop in the motor cables.
13. The installation is now complete. Reapply power to the furnace and verify that the new motor control module is working properly.

WARNING

LINE VOLTAGE NOW PRESENT

S-10 CHECKING CAPACITOR

The direct drive motors are of the (psc) permanent split capacitor design. A run capacitor is wired across the auxiliary and a portion of the main windings. The capacitors primary function is to reduce the line current while greatly improving the torque characteristics of a motor. This is accomplished by using the 90° phase relationship between the capacitor current and voltage in conjunction with the motor windings so that the motor will give two phase operation when connected to a single phase circuit. The capacitor also reduces the line current to the motor by improving the power factor to the load.

SERVICING

WARNING

DISCHARGE CAPACITOR THROUGH A 20 TO 30 OHM RESISTOR BEFORE HANDLING.

Two quick ways to test a capacitor are a resistance and a capacitance check. Refer to the next two figures for proper meter connections for the resistance and capacitance testing of the capacitor.

S-10A Resistance Check

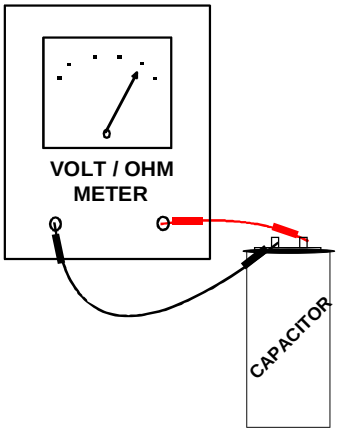

Testing Capacitor Resistance

WARNING

HIGH VOLTAGE
DISCONNECT ALL POWER BEFORE SERVICING OR INSTALLING THIS UNIT. MULTIPLE POWER SOURCES MAY BE PRESENT. FAILURE TO DO SO MAY CAUSE PROPERTY DAMAGE, PERSONAL INJURY OR DEATH.

1. Remove blower compartment door to gain access to capacitor.
2. Discharge capacitor and remove wire leads.
3. Set an ohmmeter on its highest ohm scale and connect the leads to the capacitor. A digital meter with built-in capacitance can be used or an analog meter shown above.
   a. Good Condition - indicator swings to zero and slowly returns toward infinity.
   b. Shorted - indicator swings to zero and stops there - replace.
   c. Open - no reading - replace. Reverse leads. Check again no reading - replace.
   d. Reverse leads and recheck.

S-10B Capacitance Check

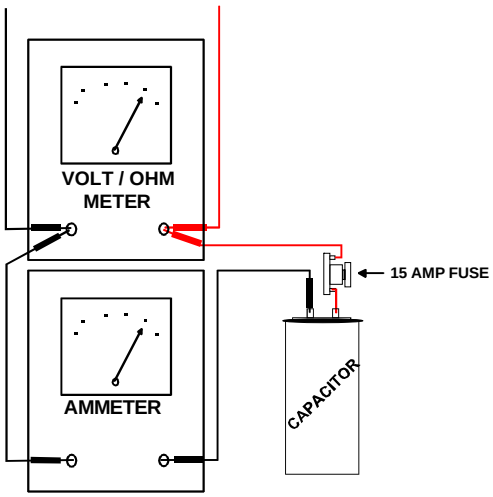

With power On (and Door Interlock Switch closed):

WARNING

LINE VOLTAGE NOW PRESENT

Using a hookup as shown above, take the amperage and voltage readings and use them in the formula:

Capacitance (MFD)= 2650 x Amperage/Voltage

4. After completing check and/or replacement of capacitor, reinstall blower compartment door.
5. Turn on electrical power and verify proper unit operation.

S-11 CHECKING GAS VALVE

Gas valves provide control of main burner gas flow, pressure regulation, and 100 percent safety shut-off.

Gas valve should have 24 volts with a call for heat. If you have 24 volts at the gas valve and it will not open, replace. No voltage at the gas valve indicates a problem somewhere else in the system.

Gas pressure on the inlet and outlet side of the gas valve should be checked and adjusted when needed.

SERVICING

S-12 CHECKING HOT SURFACE IGNITOR

The igniter most commonly used is the (B1401018S) 120V silicone carbide resistive element ignitor for ignition.

WARNING

DISCONNECT ELECTRICAL POWER SUPPLY.

1. Remove burner compartment door to gain access to the ignitor.
2. Disconnect the ignitor from the Ignition Control.
3. Using an ohmmeter measure the resistance of the ignitor.
4. Ignitor cool should read between 40 to 75 ohms.
5. Reconnect ignitor.

WARNING

LINE VOLTAGE NOW PRESENT

6. Place unit in heating cycle, measure current draw of ignitor during preheat cycle.

   Should read approximately 4 to 4.5 amps.
7. If ignitor is receiving 115 Volts and will not light, replace.
8. After check and/or replacement of hot surface ignitor, reinstall burner compartment door and verify proper unit operation.

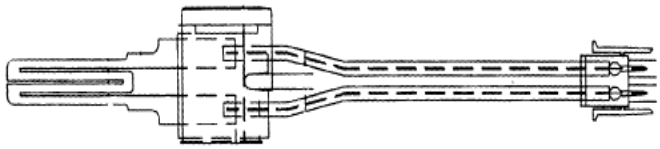

B1401018S

S-13 CHECKING INTEGRATED IGNITION CONTROLS

The furnaces are equipped with a combination ignition module and fan control. This device ignites the burners upon a call for heat. It also controls the venter blower and the various speed selections and timings of the circulating air blower. This control is located in the circulating air blower compartment. Upon a demand for heat the venter motor is energized. After a short purge, the electronic ignition device is energized. The burners are ignited and after a short delay, the burner flame is proven. The circulating air blower is energized approximately (30) seconds after the burners are ignited. A field selectable fan off timer will turn the circulating air blower off.

THIS CONTROL IS NOT FIELD SERVICABLE.

NOTE: Failure to earth ground the furnace, reversing the neutral and hot wire connection to the line (polarity), or a high resistance connection in the neutral line may cause the control to lockout due to failure to sense flame.

CAUTION

TO AVOID THE RISK OF ELECTRICAL SHOCK, WIRING TO THE UNIT MUST BE PROPERLY POLARIZED AND GROUNDED. DISCONNECT POWER BEFORE PERFORMING SERVICE LISTED.

The ground wire must run from the furnace all the way back to the electrical panel. Proper grounding can be confirmed by disconnecting the electrical power and measuring resistance between the neutral (white) connection and the burner closest to the flame sensor. Resistance should be less than 10 ohms.

The ignition control is a combination electronic and electromechanical device and is not field repairable. Complete unit must be replaced.

WARNING

LINE VOLTAGE NOW PRESENT

These tests must be completed within a given time frame due to the operation of the ignition control. Refer to *Sequence of Operation* section of this manual.

The ignition control is capable of diagnosing many furnace failures to speed troubleshooting. A flashing red diagnostic indicator light on the control flashes a code for any discovered failures.

When the control is powered up normally, the light will be solid red for normal operation. This can be used to test for 115 volts and 24 volts to the control since both must be present for the light to flash. If this step fails, check for 115 volts to the control, check the fuse and check the transformer and its associated wiring.

See the flash codes shown on the following pages of this manual.

SERVICING
FLASH CODES
GDT, GMNT, GMP, GMPN, GMT, GMTH, GMNT, GSMS

INSTALLER/SERVICEMAN

THE STATUS LIGHT ON THE FURNACE CONTROL MAY BE USED AS A GUIDE TO TROUBLESHOOTING THIS APPLIANCE. STATUS LIGHT CODES ARE AS FOLLOWS:

STATUS LIGHT	EQUIP. PROBLEM	CHECK
ON	NORMAL OPERATION	-
1 BLINK	IGNITION FAILURE	GAS FLOW GAS PRESSURE GAS VALVE FLAME SENSOR
2 BLINKS	CLOSED PRESSURE SWITCH	PRESSURE SWITCH STUCK CLOSED
3 BLINKS	PRESSURE SWITCH FAILURE TO CLOSE	VENTER PRESSURE SWITCH VENT BLOCKAGE
4 BLINKS	OPEN LIMIT SWITCH	MAIN LIMIT OPEN AUX. LIMIT OPEN
5 BLINKS	FALSE FLAME SENSED	STICKING GAS VALVE
RAPID CONTINUOUS	INCORRECT TWINNING INCORRECT PRIMARY POLARITY	REVERSE TRANSFORMER SECONDARY LEADS REVERSE PRIMARY WIRES

ADVERTISSEMENT

DECONNECTER DU CIRCUIT D'ALIMENTATION ELECTRIQUE AVANT L'ENTRETIEN. INSPECTER LES FILTRES CHAQUE MOIS ET REMPLACER SI NECESSAIRE. TOUS LES FILTRES À AIR DOIVENT ÊTRE APPROUVÉS PAR LES ULC OU LEUR EQUIVALENT. ON RECÒMMANDE D'UTILISER DES FILTRES À AIR PERMANTS. UTILISER LE TABLEAU SUIVANT POUR REMPLACER LES FILTRES À AIR.

WARNING

DISCONNECT THE ELECTRIC POWER BEFORE SEVICING.

INSPECT FILTERS MONTHLY AND REPLACE WHEN NECESSARY. ALL AIR FILTERS MUST BE CERTIFIED BY ULC OR EQUIVALENT. PERMANENT AIR FILTERS ARE RECOMMENDED. WHEN REPLACING AIR FILTERS, USE THE FOLLOWING CHART:

CHASSIS SIZE DIMENIONS DU BATI	BOTTOM APPLICATION INSTALLÉ SUR DESSOUS	SIDE AIR INSTALLATION INSTALLÉ SUR LE CÔTÉ
14"	14" X 25"	18" X 25"
17.5"	16" X 25"	18" X 25"
21"	20" X 25"	18" X 25"
24.5"	24" X 25"	18" X 25"

GMNTE

INSTALLER/SERVICEMAN

THE STATUS LIGHT ON THE FURNACE CONTROL MAY BE USED AS A GUIDE TO TROUBLESHOOTING THIS APPLIANCE. STATUS LIGHT CODES ARE AS FOLLOWS:

STATUS LIGHT	EQUIP. PROBLEM	CHECK
ON	FAILED CONTROL BOARD	REPLACE CONTROL
1 BLINK	IGNITION FAILURE	GAS FLOW GAS PRESSURE GAS VALVE FLAME SENSOR
2 BLINKS	CLOSED LOW FIRE PRESSURE SWITCH	PRESSURE SWITCH STUCK CLOSED
3 BLINKS	LOW FIRE PRESSURE SWITCH FAILURE TO CLOSE	VENTER PRESSURE SWITCH VENT BLOCKAGE
4 BLINKS	OPEN LIMIT SWITCH	MAIN, ROLLOUT, AUX, OR STACK OVERTEMP OPEN
6 BLINKS	115 V POWER REVERSED	115 V POLARITY
7 BLINKS	LOW FLAME SENSE	FLAME SENSOR
8 BLINKS	IGNITER/UNIT GROUND	IGNITER/UNIT GROUND
9 BLINKS	HIGH FIRE PRESSURE SWITCH FAILURE TO CLOSE	VENTER PRESSURE SWITCH VENT BLOCKAGE
CONTINUOUS BLINKS	FALSE FLAME SENSED	STICKING GAS VALVE

ADVERTISSEMENT

DECONNECTER DU CIRCUIT D'ALIMENTATION ELECTRIQUE AVANT L'ENTRETIEN. INSPECTER LES FILTRES CHAQUE MOIS ET REMPLACER SI NECESSAIRE. TOUS LES FILTRES À AIR DOIVENT ÊTRE APPROUVÉS PAR LES ULC OU LEUR EQUIVALENT. ON RECÒMMANDE D'UTILISER DES FILTRES À AIR PERMANTS. UTILISER LE TABLEAU SUIVANT POUR REMPLACER LES FILTRES À AIR.

WARNING

DISCONNECT THE ELECTRIC POWER BEFORE SEVICING.

INSPECT FILTERS MONTHLY AND REPLACE WHEN NECESSARY. ALL AIR FILTERS MUST BE CERTIFIED BY ULC OR EQUIVALENT. PERMANENT AIR FILTERS ARE RECOMMENDED. WHEN REPLACING AIR FILTERS, USE THE FOLLOWING CHART:

CHASSIS SIZE` DIMENSIONS DU BATI	BOTTOM APPLICATION INSTALLÉ SUR DESSOUS	SIDE AIR INSTALLATION INSTALLÉ SUR LE CÔTÉ
14"	14" X 25"	18" X 25"
17.5"	16" X 25"	18" X 25"
21"	20" X 25"	18" X 25"
24.5"	24" X 25"	18" X 25"

GMPE

INSTALLER/SERVICEMAN

THE STATUS LIGHT ON THE FURNACE CONTROL MAY BE USED AS A GUIDE TO TROUBLESHOOTING THIS APPLIANCE. STATUS LIGHT CODES ARE AS FOLLOWS:

STATUS LIGHT	EQUIP. PROBLEM	CHECK
ON	NORMAL OPERATION	
1 BLINK	FAILURE TO DETECT FLAME SENSE	GAS FLOW GAS PRESSURE GAS VALVE FLAME SENSOR
2 BLINKS	CLOSED PRESSURE SWITCH	PRESSURE SWITCH STUCK CLOSED
3 BLINKS	PRESSURE SWITCH FAILURE TO CLOSE	VENTER PRESSURE SWITCH VENT BLOCKAGE
4 BLINKS	OPEN LIMIT SWITCH	MAIN LIMIT OPEN AUX. LIMIT OPEN
5 BLINKS	FALSE FLAME SENSED	STICKING GAS VALVE
RAPID CONTINUOUS	REVERSED POLARITY INCORRECT TWINNING	REVERSE POWER SUPPLY LEADS REVERSE TRANS. SECONDARY LEADS

WARNING

DISCONNECT THE ELECTRIC POWER BEFORE SEVICING.

INSPECT FILTERS MONTHLY AND REPLACE WHEN NECESSARY. ALL AIR FILTERS MUST BE CERTIFIED BY U.L. OR EQUIVALENT. PERMANENT AIR FILTERS ARE RECOMMENDED. WHEN REPLACING AIR FILTERS USE THE FOLLOWING CHART:

MODEL	FILTER SIZE
GMPE075-1.5/3	18" X 25"
GMPE100-2.5/4	18" X 25"
GMPE125-3/5	18" X 25"

GMPH

INSTALLER/SERVICEMAN

THE STATUS LIGHT ON THE FURNACE CONTROL MAY BE USED AS A GUIDE TO TROUBLESHOOTING THIS APPLIANCE. STATUS LIGHT CODES ARE AS FOLLOWS:

STATUS LIGHT	EQUIP. PROBLEM	CHECK
ON	NORMAL OPERATION	-
1 BLINK	IGNITION FAILURE	GAS FLOW GAS PRESSURE GAS VALVE FLAME SENSOR
2 BLINKS	CLOSED PRESSURE SWITCH	PRESSURE SWITCH STUCK CLOSED
3 BLINKS	PRESSURE SWITCH FAILURE TO CLOSE	VENTER PRESSURE SWITCH VENT BLOCKAGE
4 BLINKS	OPEN LIMIT SWITCH	MAIN LIMIT OPEN AUX. LIMIT OPEN
5 BLINKS	FALSE FLAME SENSED	STICKING GAS VALVE
RAPID CONTINUOUS	INCORRECT TWINNING INCORRECT PRIMARY POLARITY	REVERSE TRANSFORMER SECONDARY LEADS REVERSE PRIMARY WIRES

⚠ ADVERTISSEMENT

DECONNECTER DU CIRCUIT D'ALIMENTATION ELECTRIQUE AVANT L'ENTRETIEN. INSPECTER LES FILTRES CHAQUE MOIS ET REMPLACER SI NECESSAIRE. TOUS LES FILTRES À AIR DOIVENT ÊTRE APPROUVÉS PAR LES ULC OU LEUR EQUIVALENT. ON RECÒMMANDE D'UTILISER DES FILTRES À AIR PERMANTS. UTILISER LE TABLEAU SUIVANT POUR REMPLACER LES FILTRES À AIR.

⚠ WARNING

DISCONNECT THE ELECTRIC POWER BEFORE SEVICING.

INSPECT FILTERS MONTHLY AND REPLACE WHEN NECESSARY. ALL AIR FILTERS MUST BE CERTIFIED BY ULC OR EQUIVALENT. PERMANENT AIR FILTERS ARE RECOMMENDED. WHEN REPLACING AIR FILTERS, USE THE FOLLOWING CHART:

CHASSIS SIZE DIMENIONS DU BÂTI	BOTTOM APPLICATION INSTALLÉ SUR DESSOUS	SIDE AIR INSTALLATION INSTALLÉ SUR LE CÔTÉ
14"	14" X 25"	18" X 25"
17.5"	16" X 25"	18" X 25"
21"	20" X 25"	18" X 25"
24.5"	24" X 25"	18" X 25"

GSU

INSTALLER/SERVICEMAN

THE STATUS LIGHT ON THE FURNACE CONTROL MAY BE USED AS A GUIDE TO TROUBLESHOOTING THIS APPLIANCE. STATUS LIGHT CODES ARE AS FOLLOWS:

STATUS LIGHT	EQUIP. PROBLEM	CHECK
ON	NORMAL OPERATION	---
1 BLINK	IGNITION FAILURE	GAS FLOW GAS PRESSURE GAS VALVE FLAME SENSOR
2 BLINKS	CLOSED PRESSURE SWITCH	PRESSURE SWITCH STUCK CLOSED
3 BLINKS	LOW FIRE PRESSURE SWITCH FAILURE TO CLOSE	**VENTER MOTOR PRESSURE SWITCH VENT BLOCKAGE PRESSURE PORT TAP STOPPED UP**
4 BLINKS	OPEN LIMIT SWITCH	MAIN LIMIT OPEN
5 BLINKS	FALSE FLAME SENSED	GAS VALVE STICKING
6 BLINKS	HIGH FIRE PRESSURE SWITCH FAILURE TO CLOSE	**VENTER MOTOR PRESSURE SWITCH VENT BLOCKAGE PRESSURE PORT TAP STOPPED UP**
RAPID CONTINOUS	CHECK POLARITY INCORRECT TWINNING	**SWAP SEC. TRANSFORMER LEADS SWAP L1 & L2 LEADS**
NO LIGHT	IGNITION CONTROL FAILURE	**CHECK FUSE & TRANSFORMER CHECK FOR 115V at Control Board**

ADVERTISSEMENT

DECONNECTER DU CIRCUIT D'ALIMENTATION ELECTRIQUE AVANT L'ENTRETIEN. INSPECTER LES FILTRES CHAQUE MOIS ET REMPLACER SI NECESSAIRE. TOUS LES FILTRES À AIR DOIVENT ÊTRE APPROUVÉS PAR LES ULC OU LEUR EQUIVALENT. ON RECÒMMANDE D'UTILISER DES FILTRES À AIR PERMANTS. UTILISER LE TABLEAU SUIVANT POUR REMPLACER LES FILTRES À AIR.

WARNING

DISCONNECT THE ELECTRIC POWER BEFORE SEVICING.

INSPECT FILTERS MONTHLY AND REPLACE WHEN NECESSARY. ALL AIR FILTERS MUST BE CERTIFIED BY ULC OR EQUIVALENT. PERMANENT AIR FILTERS ARE RECOMMENDED. WHEN REPLACING AIR FILTERS, USE THE FOLLOWING CHART:

CHASSIS SIZE DIMENSIONS DU BATI	BOTTOM APPLICATION INSTALLÉ SUR DESSOUS	SIDE AIR INSTALLATION INSTALLÉ SUR LE CÔTÉ
14"	14" X 25"	18" X 25"
17.5"	16" X 25"	18" X 25"
21"	20" X 25"	18" X 25"
24.5"	24" X 25"	18" X 25"

SERVICING

S-14 CHECKING FLAME SENSOR

A flame sensing device is used in conjunction with the ignition control module to prove combustion. If proof of flame is not present the control will de-energize the gas valve and "retry" for ignition or lockout.

The following drawing illustrated from a bottom view, the approximate distances for the ignitor and flame sensor to the gas inshot burner. This may vary on different models. You will note they are in the main burner stream.

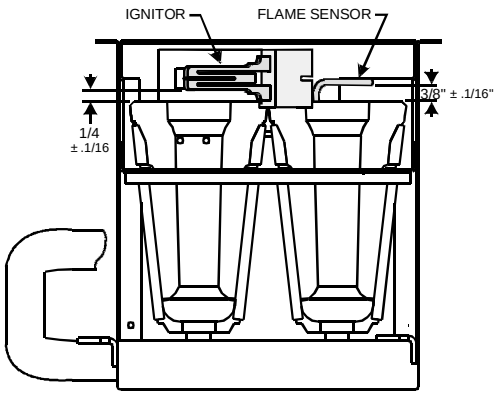

Models with Integrated Ignition Control & Flame Sensor Probe

WARNING

HIGH VOLTAGE
DISCONNECT ALL POWER BEFORE SERVICING OR INSTALLING THIS UNIT. MULTIPLE POWER SOURCES MAY BE PRESENT. FAILURE TO DO SO MAY CAUSE PROPERTY DAMAGE, PERSONAL INJURY OR DEATH.

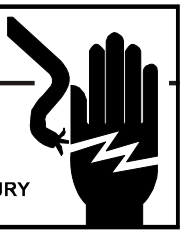

1. Disconnect the flame sensor wire from the sensor terminal.
2. Connect a micro-amp meter in series with this wire and the sensor terminal. See next illustration.
3. Be sure the negative side of the meter is connected to the wire and the positive side of the meter is to sensor terminal.

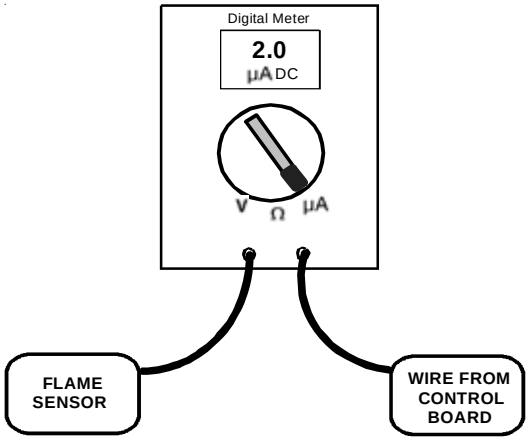

WARNING

LINE VOLTAGE NOW PRESENT

4. Place the unit into a heating cycle.
5. As soon as flame is established a micro-amp reading should be evident once proof of flame (micro-amp reading) is established, the hot surface ignitor will be de-energized.
6. The Integrated Ignition controls will have 1 to 4 micro-amps. If the micro-amp reading is less .8uA (micro-amp DC). Check for high resistance wiring connections, sensor to burner gap, dirty flame sensor, or poor grounding.
7. Clean flame sensor with steel wool or emery cloth before replacing any components. DO NOT use sandpaper. See note below.

NOTE: Contaminated fuel or combustion air can create a nearly invisible coating on the flame sensor. This coating works as an insulator causing a loss in the flame sense signal. If this situation occurs the flame sensor must be cleaned with steel wool or emery cloth.

SERVICING

S-15 CHECKING MAIN BURNERS

The main burners are used to provide complete combustion of various fuels in a limited space, and transfer this heat of the burning process to the heat exchanger.

Proper ignition, combustion, and extinction are primarily due to burner design, orifice sizing, gas pressure, primary and secondary air, vent and proper seating of burners.

We have used several in shot burner designs over the years and illustrated in the following illustrations.

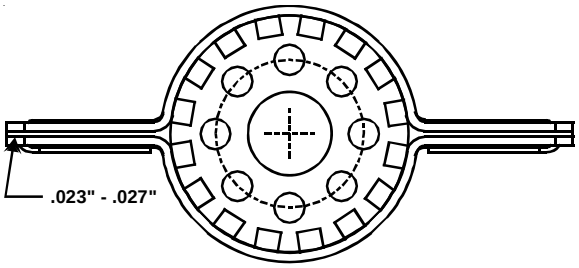

(Beckett Burner - New Style)

⚠ WARNING

DISCONNECT GAS AND ELECTRICAL POWER SUPPLY.

In checking main burners, look for signs of rust, oversized and undersized carry over ports restricted with foreign material, etc, refer to previous drawing.

Other older main burners (shown below) should not need adjustment in most instances. However, burner air shutters are provided should adjustment be necessary. After the furnace has been in operation for at least five (5) minutes loosen the air shutter locking screws and close the shutter until yellow tipped flames appear. Now slowly open the shutter until the yellow disappears. Retighten the locking screw.

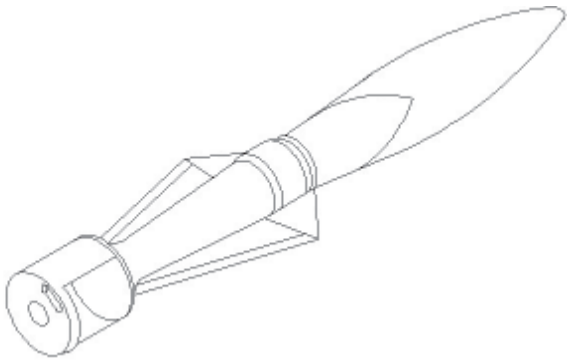

WARNING

HIGH VOLTAGE!
DISCONNECT ALL POWER BEFORE SERVICING OR INSTALLING THIS UNIT. MULTIPLE POWER SOURCES MAY BE PRESENT. FAILURE TO DO SO MAY CAUSE PROPERTY DAMAGE, PERSONAL INJURY OR DEATH.

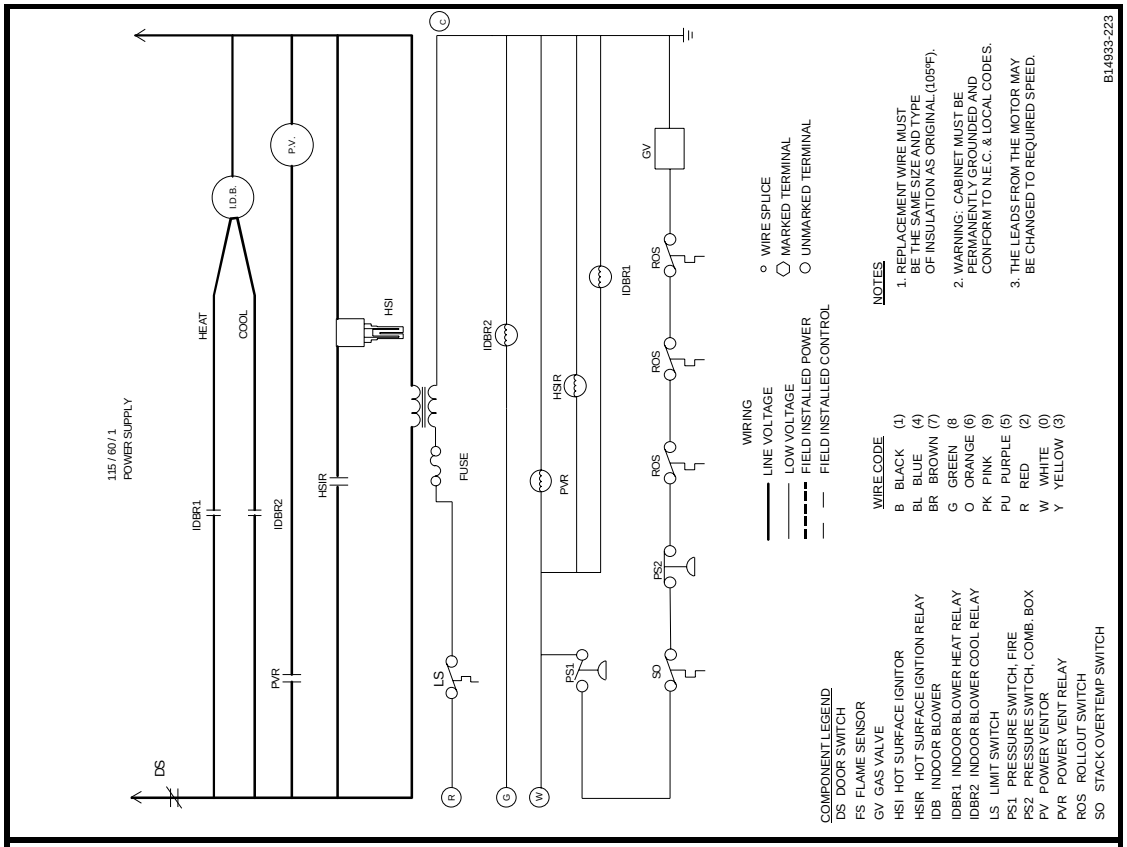

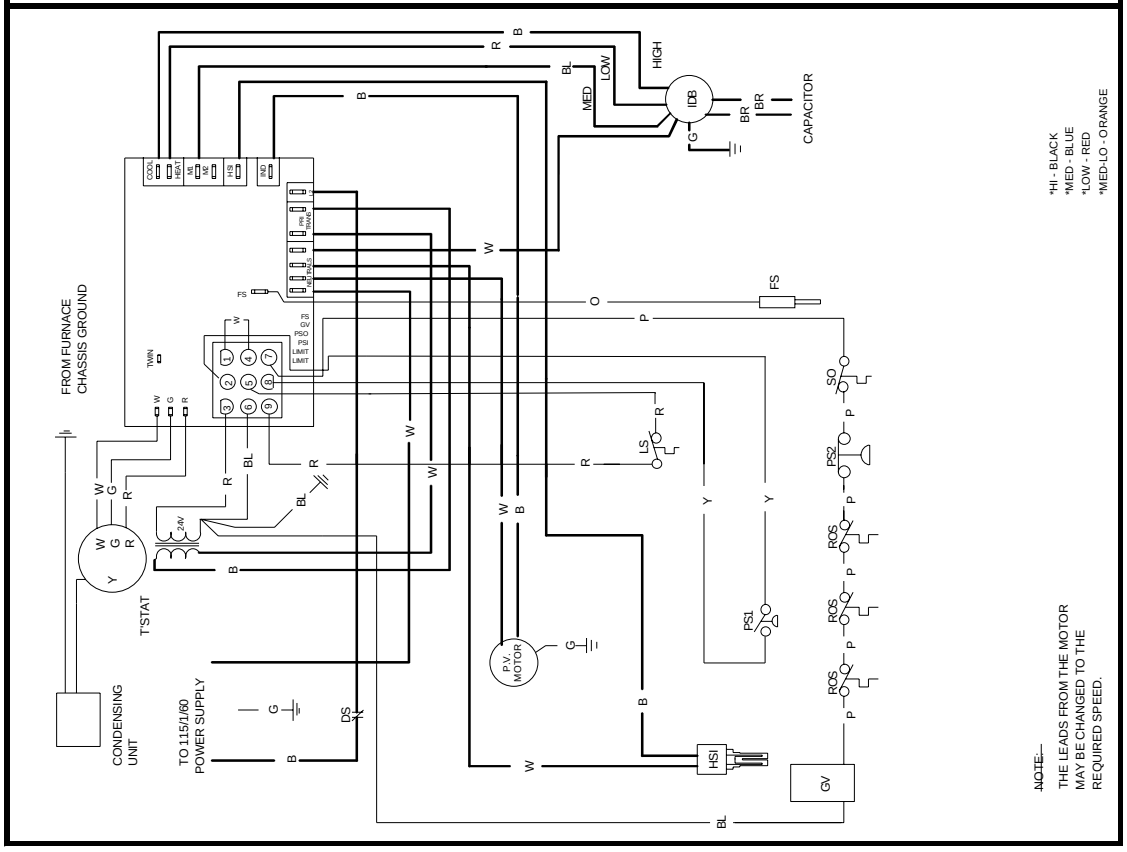

Wiring is subject to change. Always refer to the wiring diagram on the unit for the most up-to-date wiring.

WARNING

HIGH VOLTAGE!
DISCONNECT ALL POWER BEFORE SERVICING OR INSTALLING THIS UNIT. MULTIPLE POWER SOURCES MAY BE PRESENT. FAILURE TO DO SO MAY CAUSE PROPERTY DAMAGE, PERSONAL INJURY OR DEATH.

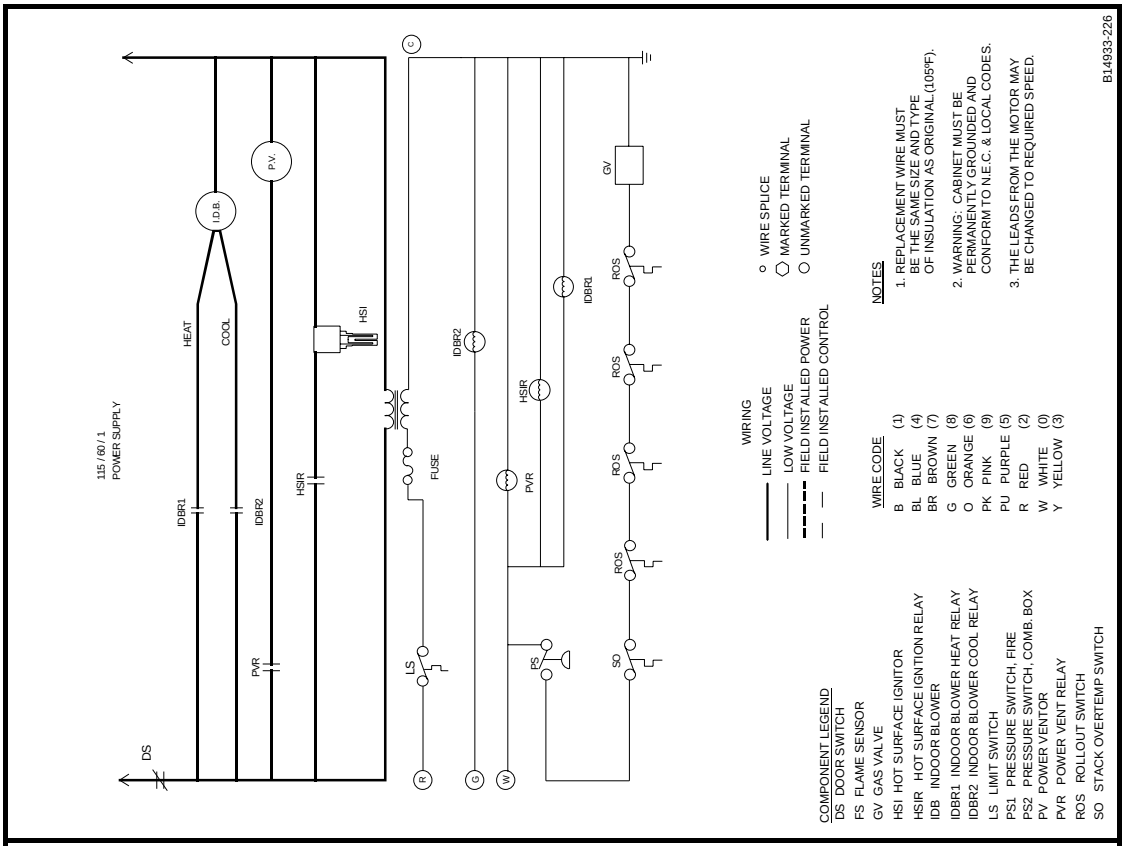

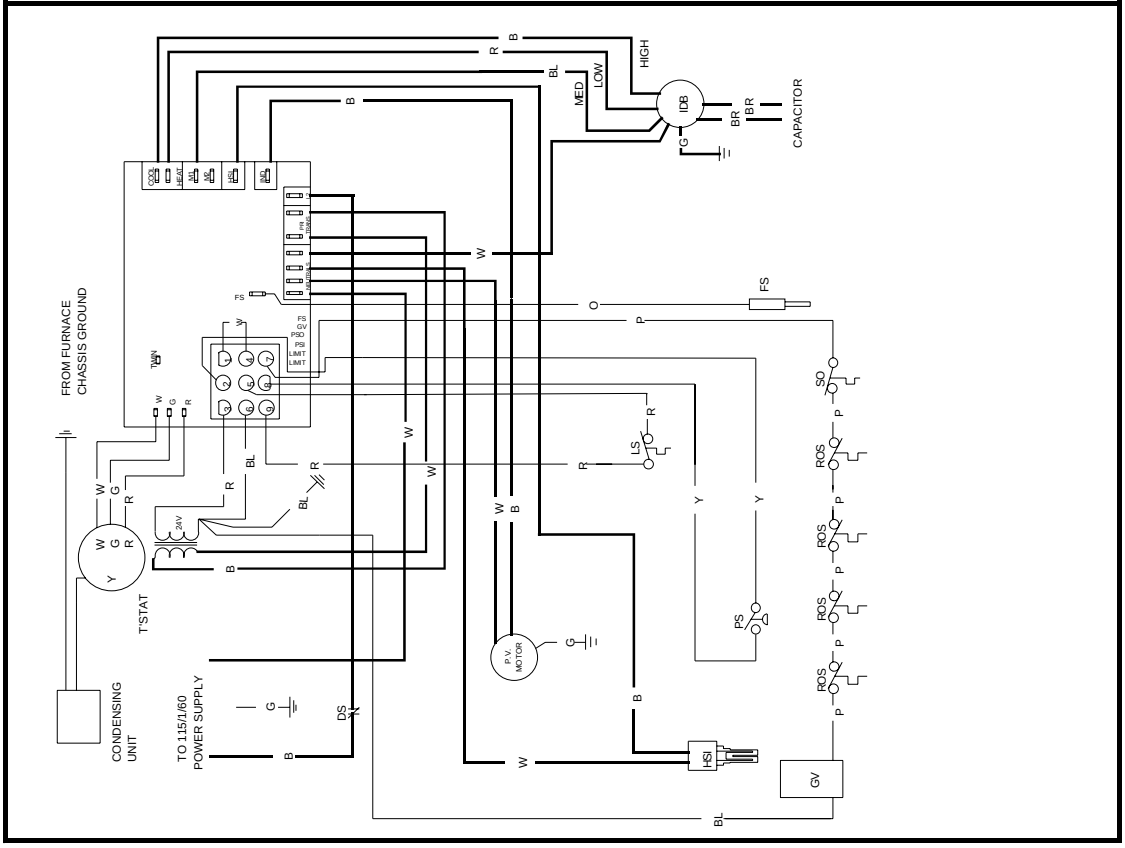

Wiring is subject to change. Always refer to the wiring diagram on the unit for the most up-to-date wiring.

WARNING

HIGH VOLTAGE!
DISCONNECT ALL POWER BEFORE SERVICING OR INSTALLING THIS UNIT. MULTIPLE POWER SOURCES MAY BE PRESENT. FAILURE TO DO SO MAY CAUSE PROPERTY DAMAGE, PERSONAL INJURY OR DEATH.

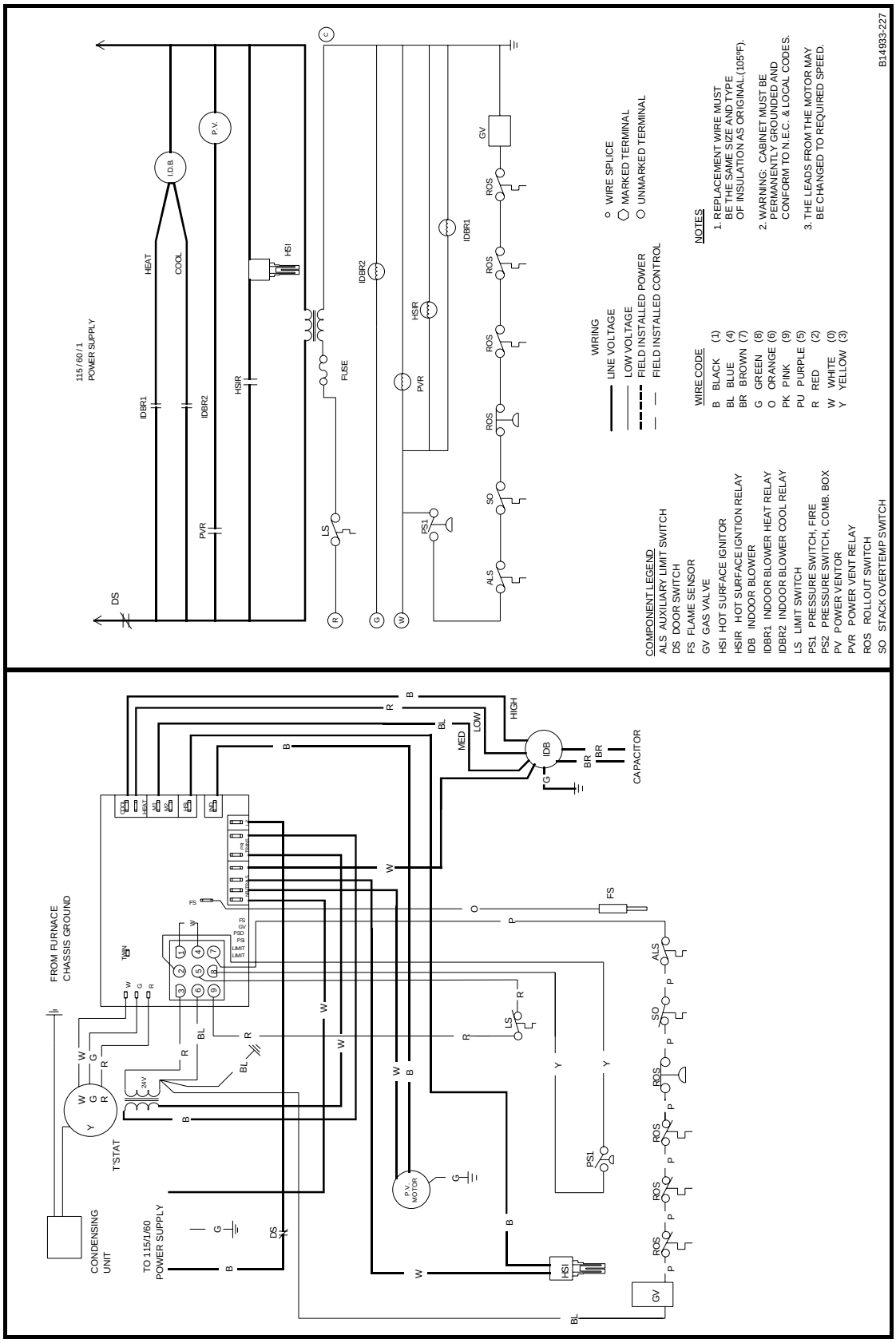

Wiring is subject to change. Always refer to the wiring diagram on the unit for the most up-to-date wiring.

WARNING

HIGH VOLTAGE!
DISCONNECT ALL POWER BEFORE SERVICING OR INSTALLING THIS UNIT. MULTIPLE POWER SOURCES MAY BE PRESENT. FAILURE TO DO SO MAY CAUSE PROPERTY DAMAGE, PERSONAL INJURY OR DEATH.

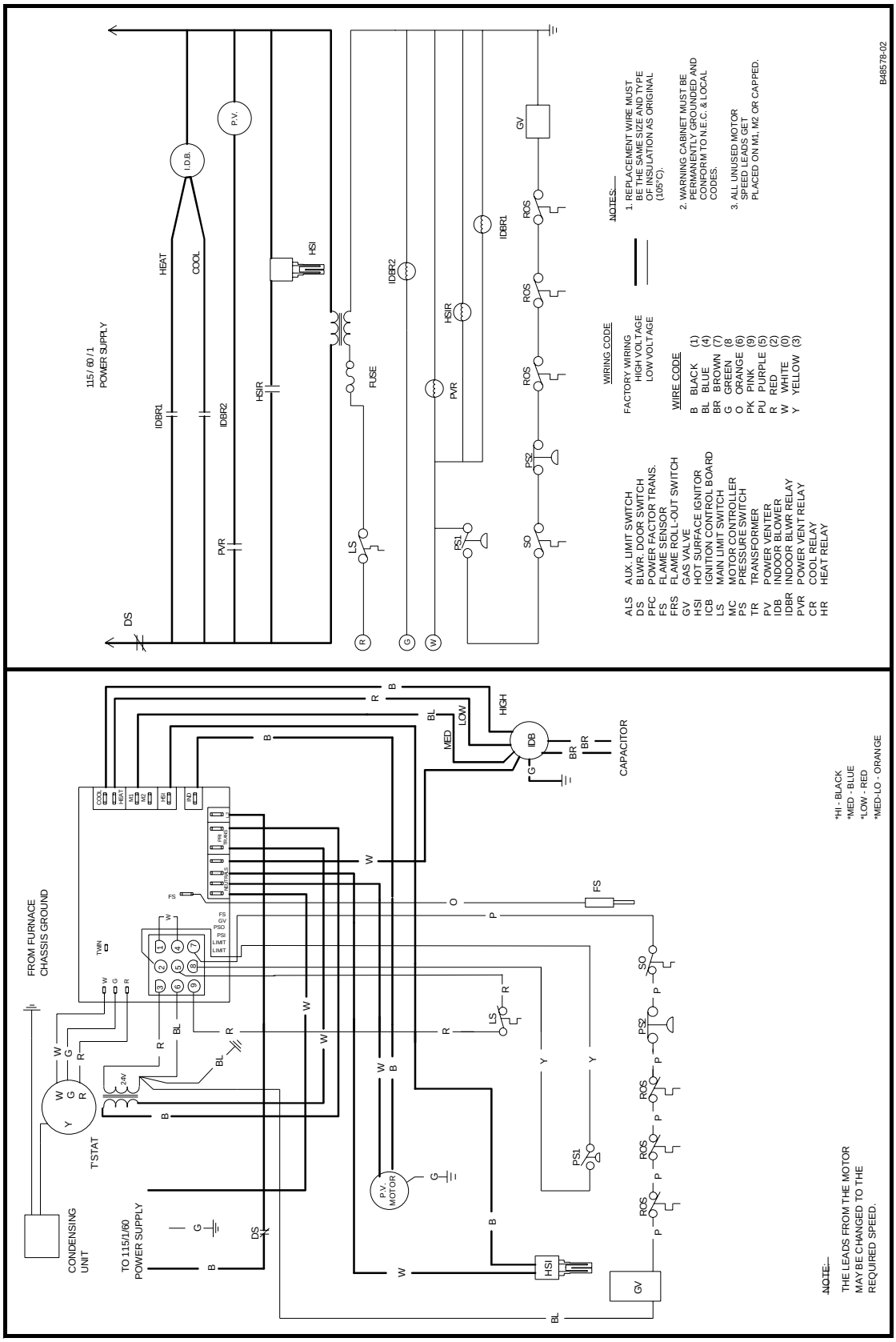

Wiring is subject to change. Always refer to the wiring diagram on the unit for the most up-to-date wiring.

WARNING

HIGH VOLTAGE!
DISCONNECT ALL POWER BEFORE SERVICING OR INSTALLING THIS UNIT. MULTIPLE POWER SOURCES MAY BE PRESENT. FAILURE TO DO SO MAY CAUSE PROPERTY DAMAGE, PERSONAL INJURY OR DEATH.

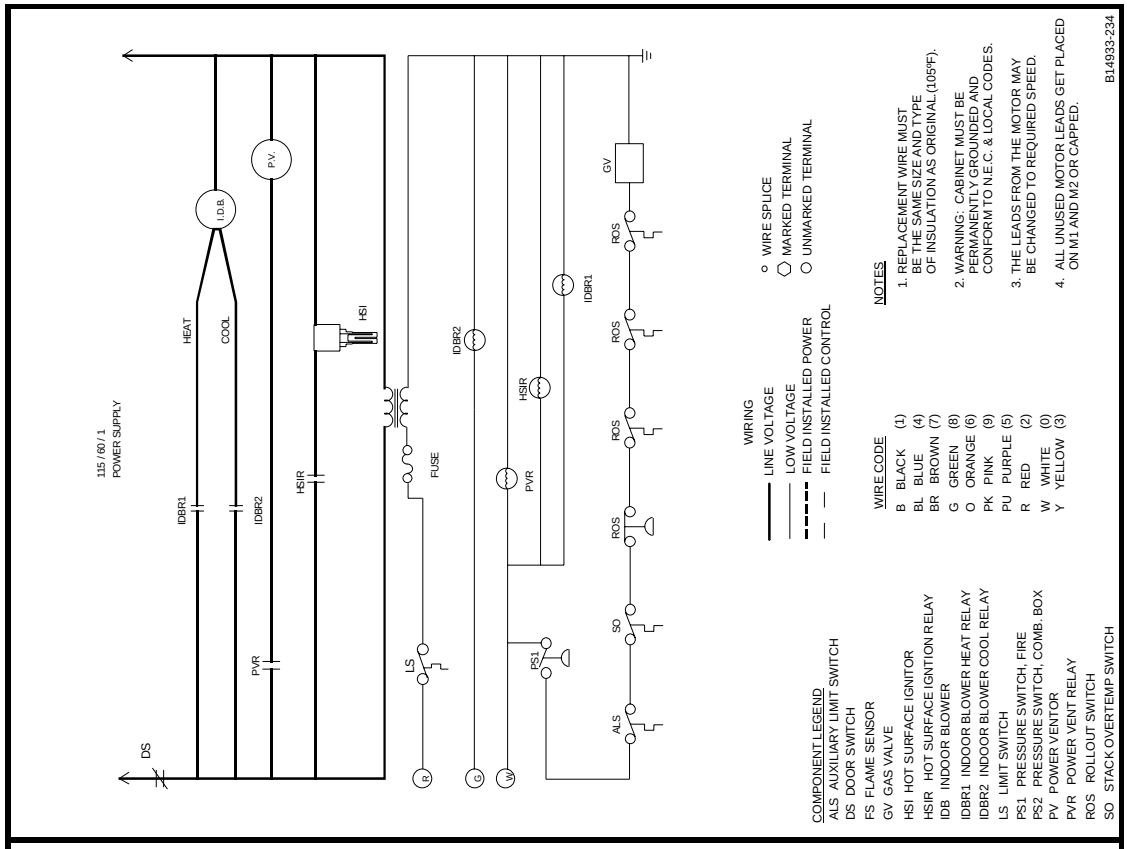

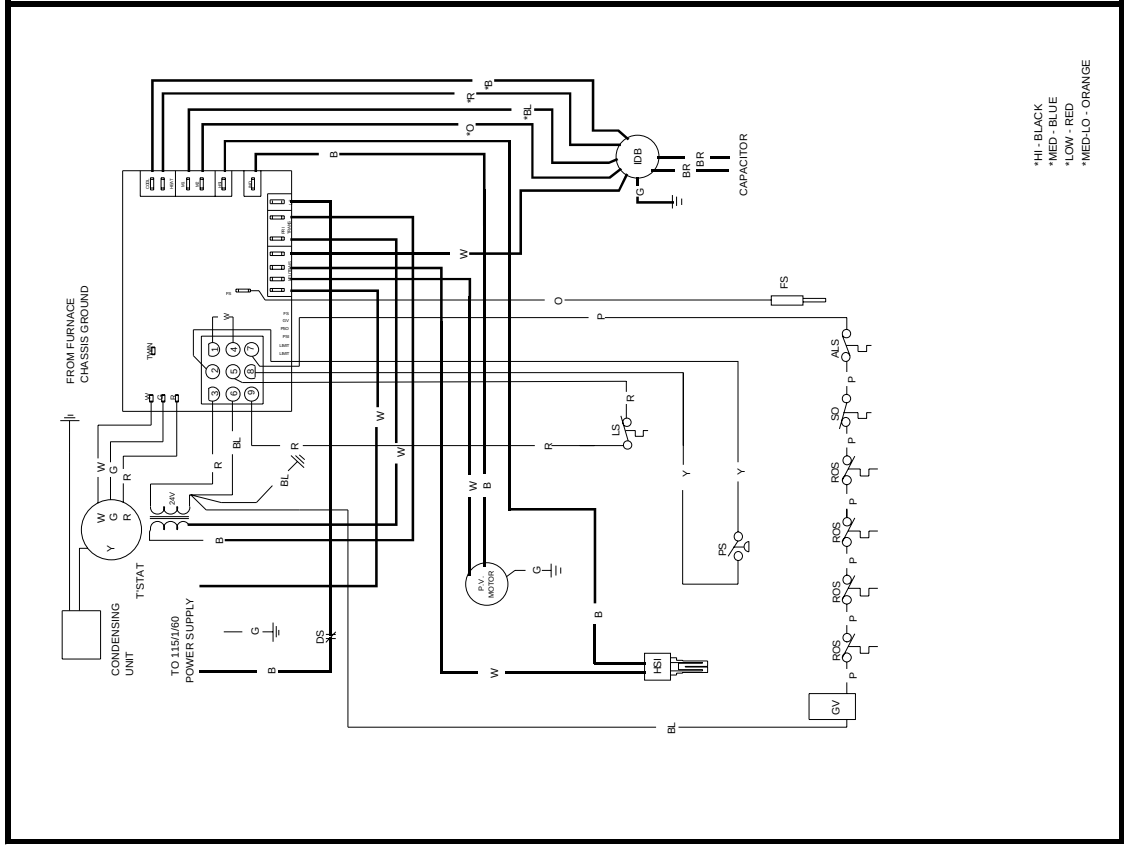

Wiring is subject to change. Always refer to the wiring diagram on the unit for the most up-to-date wiring.

WARNING

HIGH VOLTAGE!
DISCONNECT ALL POWER BEFORE SERVICING OR INSTALLING THIS UNIT. MULTIPLE POWER SOURCES MAY BE PRESENT. FAILURE TO DO SO MAY CAUSE PROPERTY DAMAGE, PERSONAL INJURY OR DEATH.

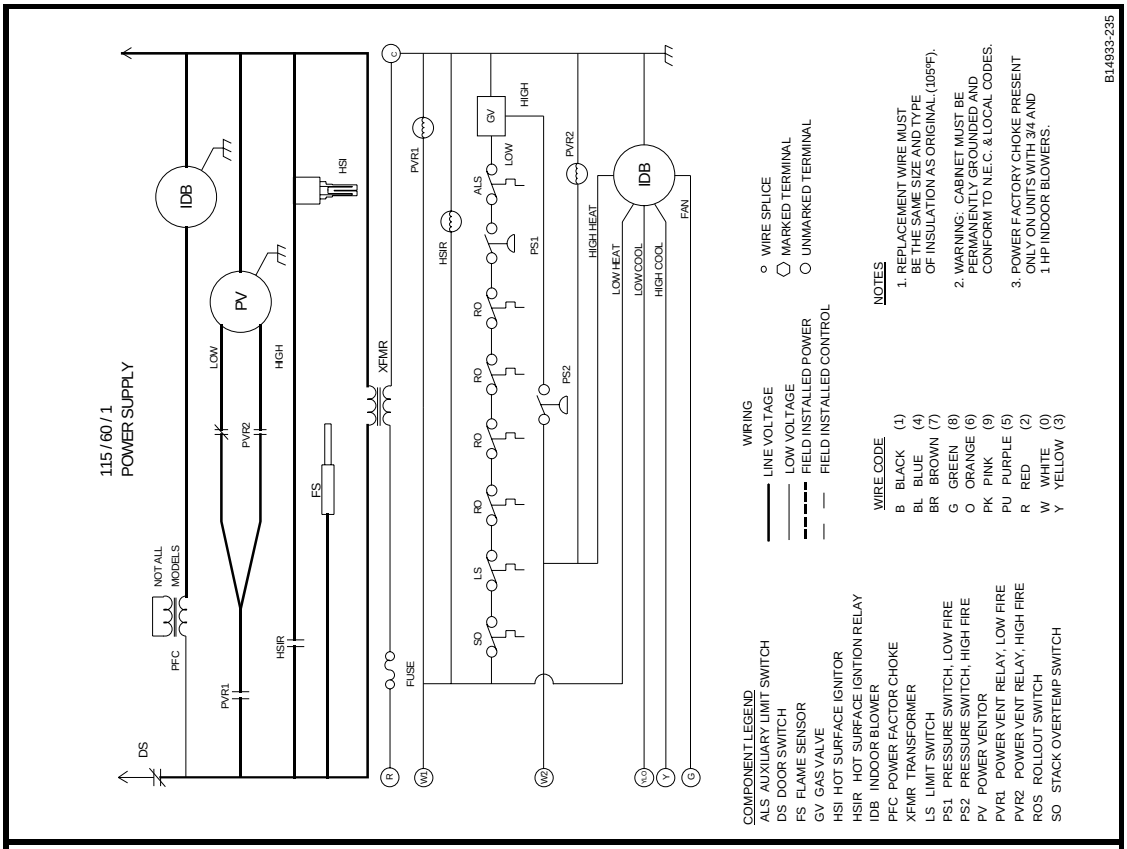

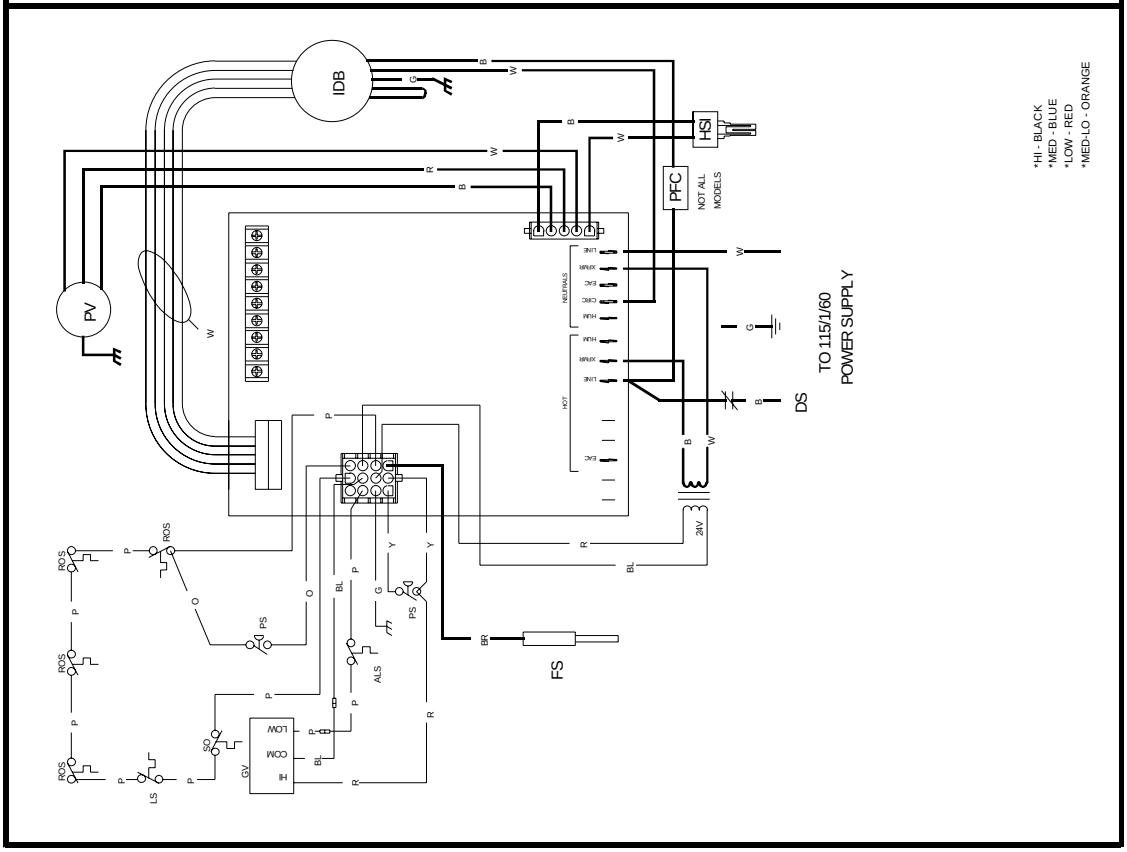

Wiring is subject to change. Always refer to the wiring diagram on the unit for the most up-to-date wiring.

WARNING

HIGH VOLTAGE!
DISCONNECT ALL POWER BEFORE SERVICING OR INSTALLING THIS UNIT. MULTIPLE POWER SOURCES MAY BE PRESENT. FAILURE TO DO SO MAY CAUSE PROPERTY DAMAGE, PERSONAL INJURY OR DEATH.

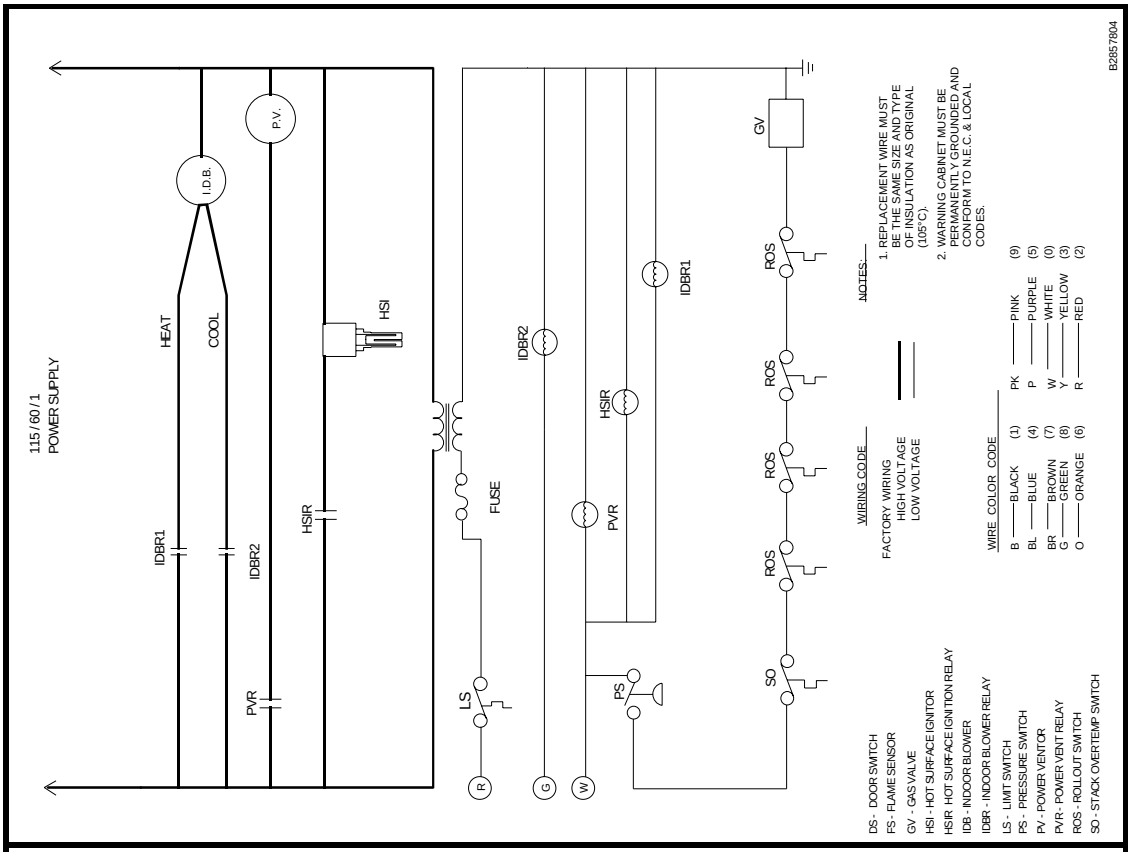

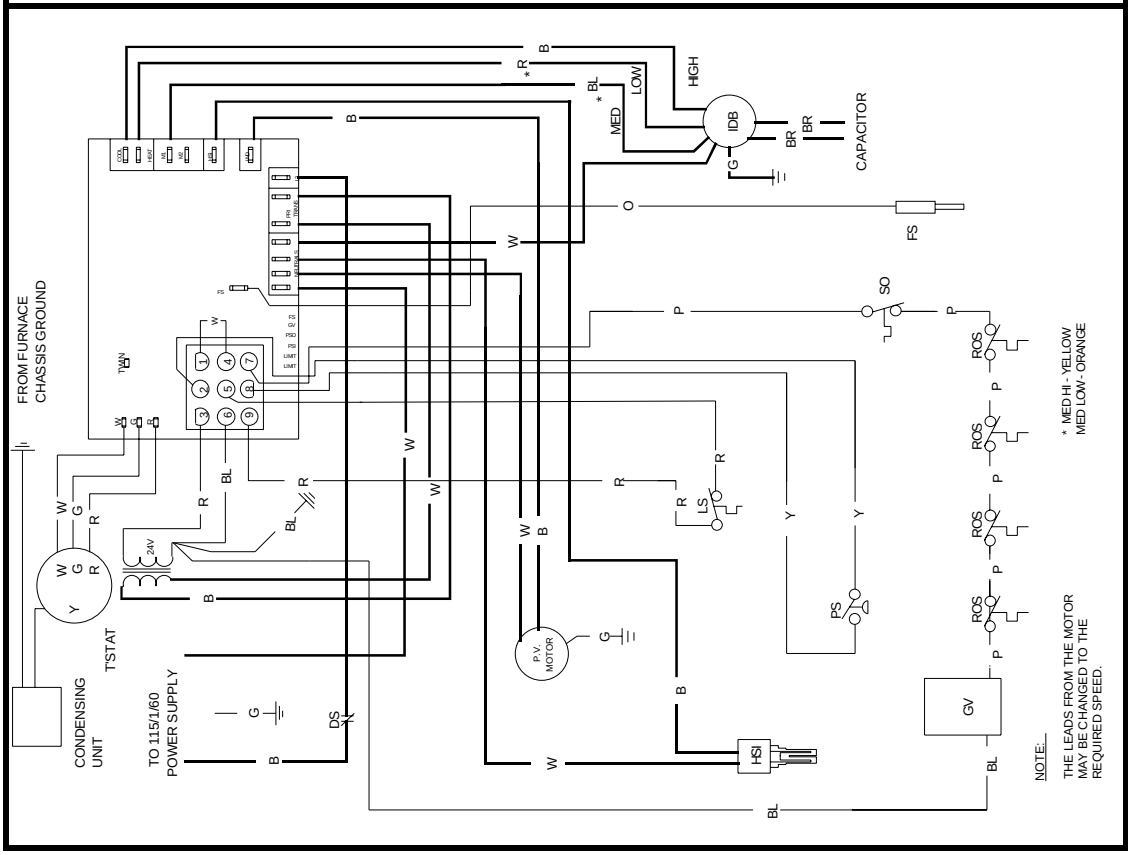

Wiring is subject to change. Always refer to the wiring diagram on the unit for the most up-to-date wiring.

WARNING

HIGH VOLTAGE!
DISCONNECT ALL POWER BEFORE SERVICING OR INSTALLING THIS UNIT. MULTIPLE POWER SOURCES MAY BE PRESENT. FAILURE TO DO SO MAY CAUSE PROPERTY DAMAGE, PERSONAL INJURY OR DEATH.

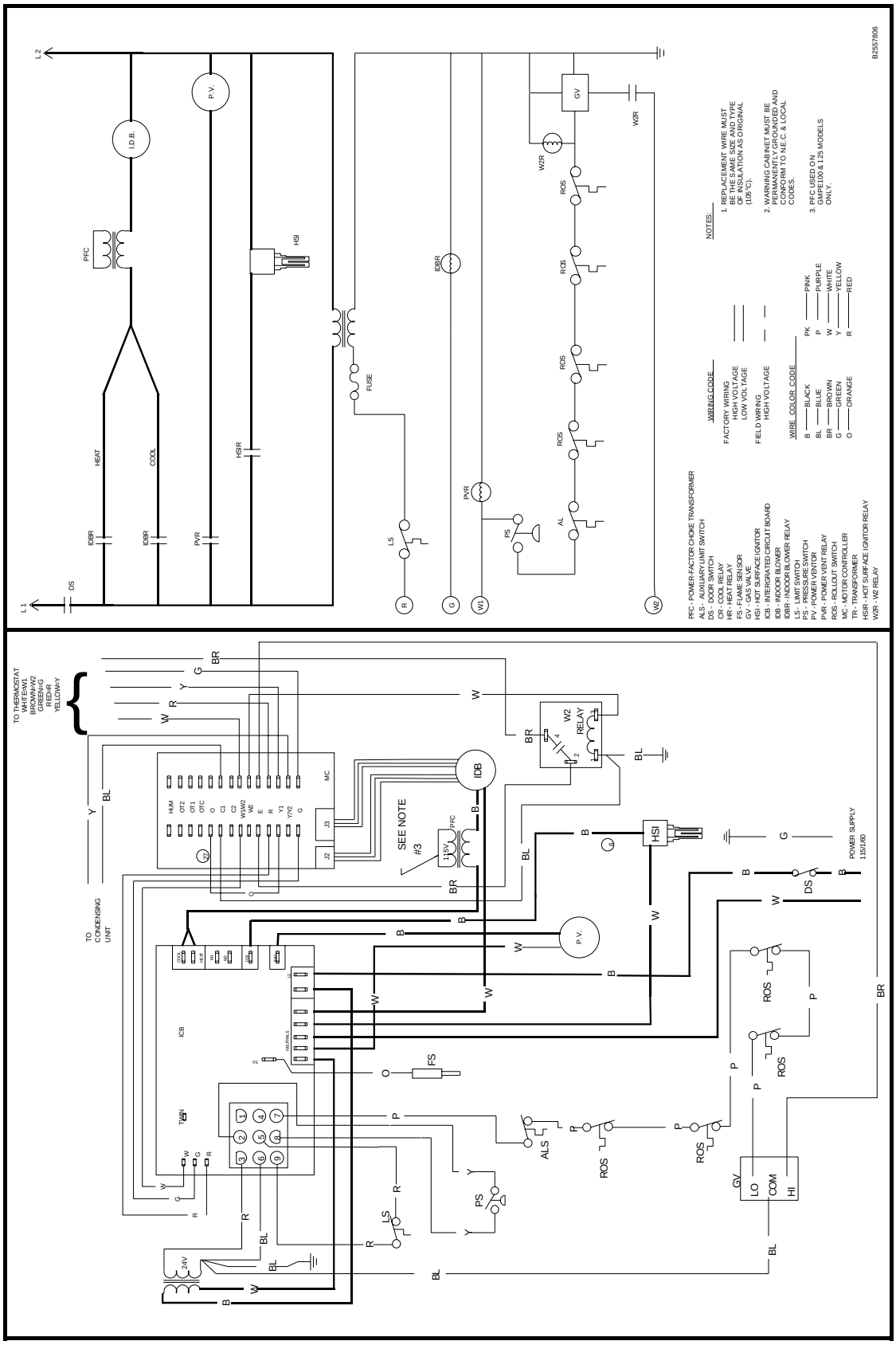

Wiring is subject to change. Always refer to the wiring diagram on the unit for the most up-to-date wiring.

WARNING

HIGH VOLTAGE!
DISCONNECT ALL POWER BEFORE SERVICING OR INSTALLING THIS UNIT. MULTIPLE POWER SOURCES MAY BE PRESENT. FAILURE TO DO SO MAY CAUSE PROPERTY DAMAGE, PERSONAL INJURY OR DEATH.

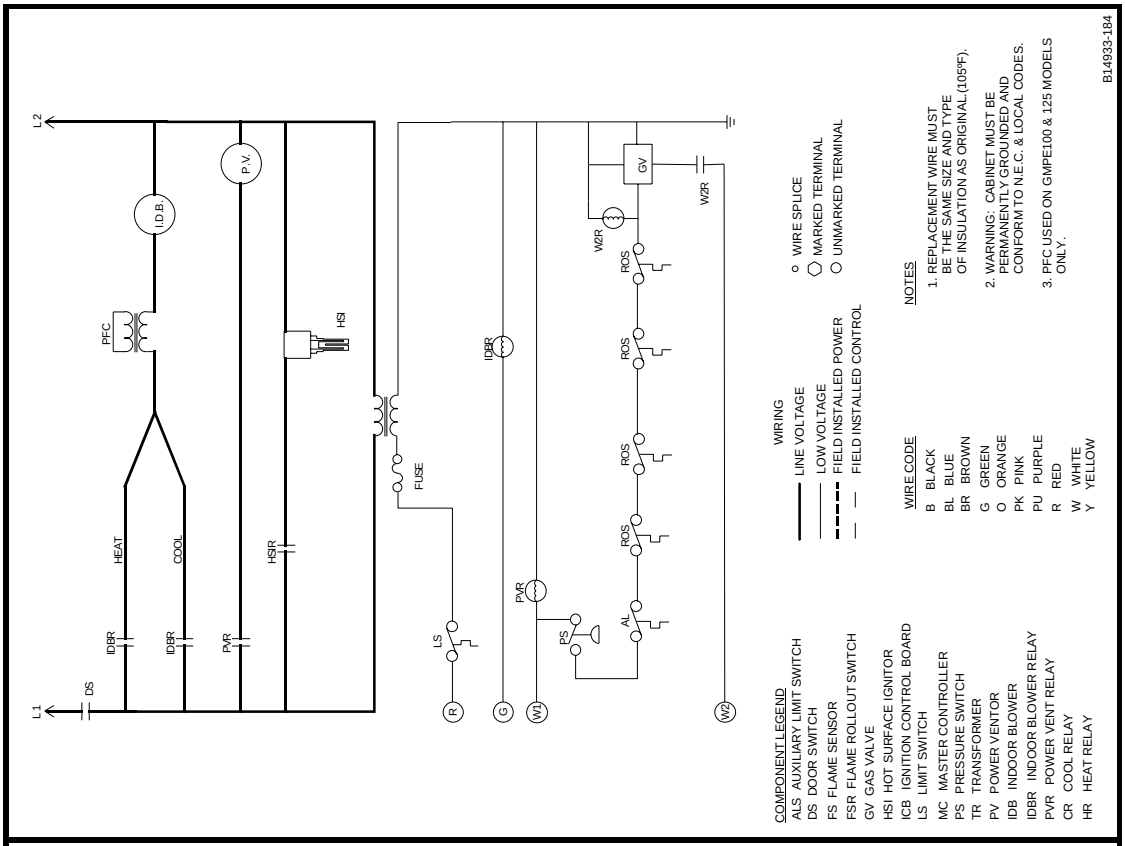

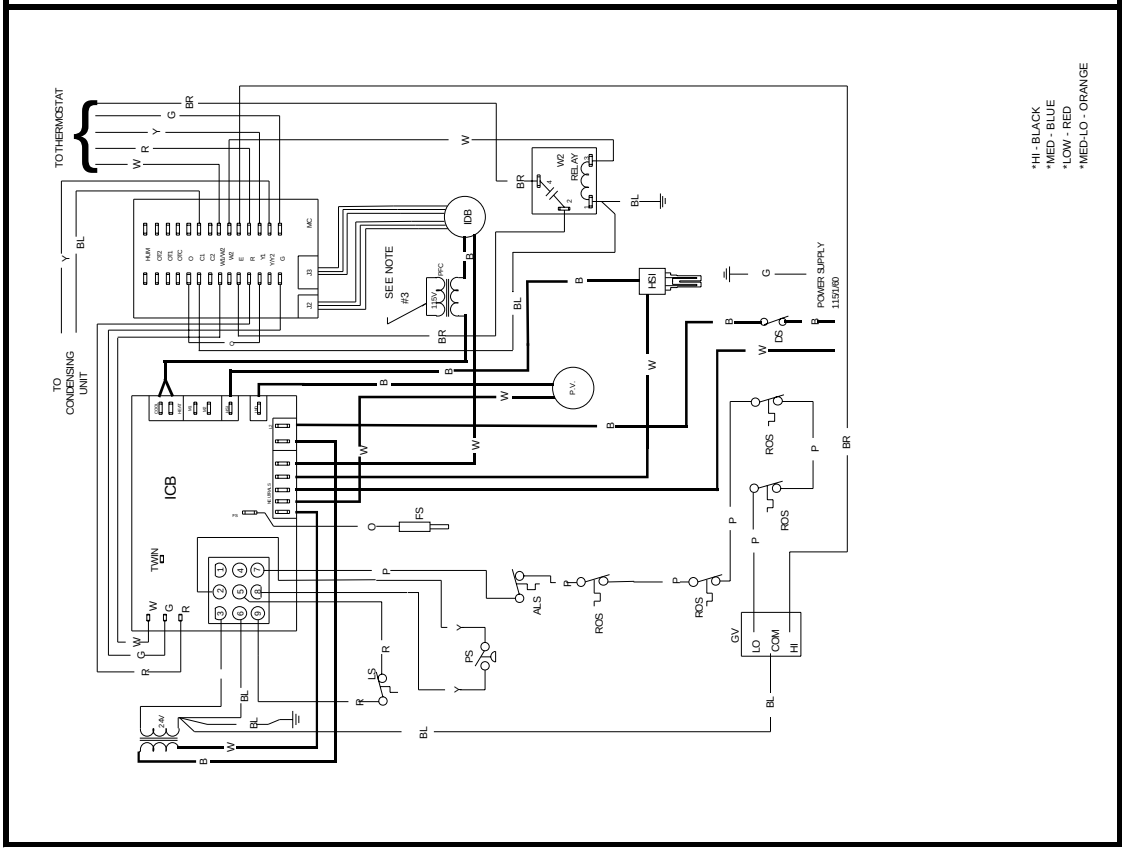

Wiring is subject to change. Always refer to the wiring diagram on the unit for the most up-to-date wiring.

WARNING

HIGH VOLTAGE!
DISCONNECT ALL POWER BEFORE SERVICING OR INSTALLING THIS UNIT. MULTIPLE POWER SOURCES MAY BE PRESENT. FAILURE TO DO SO MAY CAUSE PROPERTY DAMAGE, PERSONAL INJURY OR DEATH.

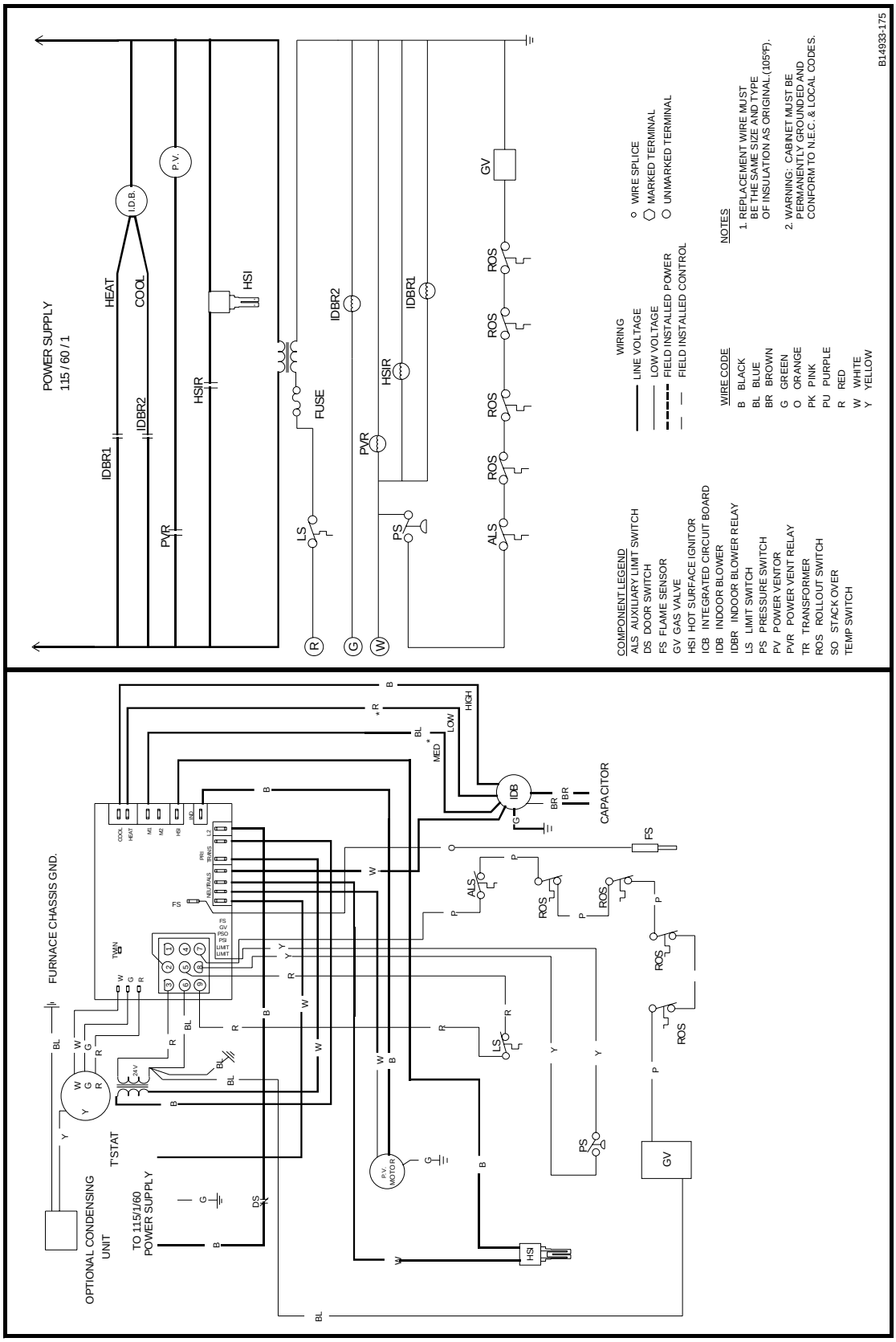

Wiring is subject to change. Always refer to the wiring diagram on the unit for the most up-to-date wiring.

WARNING

HIGH VOLTAGE!
DISCONNECT ALL POWER BEFORE SERVICING OR INSTALLING THIS UNIT. MULTIPLE POWER SOURCES MAY BE PRESENT. FAILURE TO DO SO MAY CAUSE PROPERTY DAMAGE, PERSONAL INJURY OR DEATH.

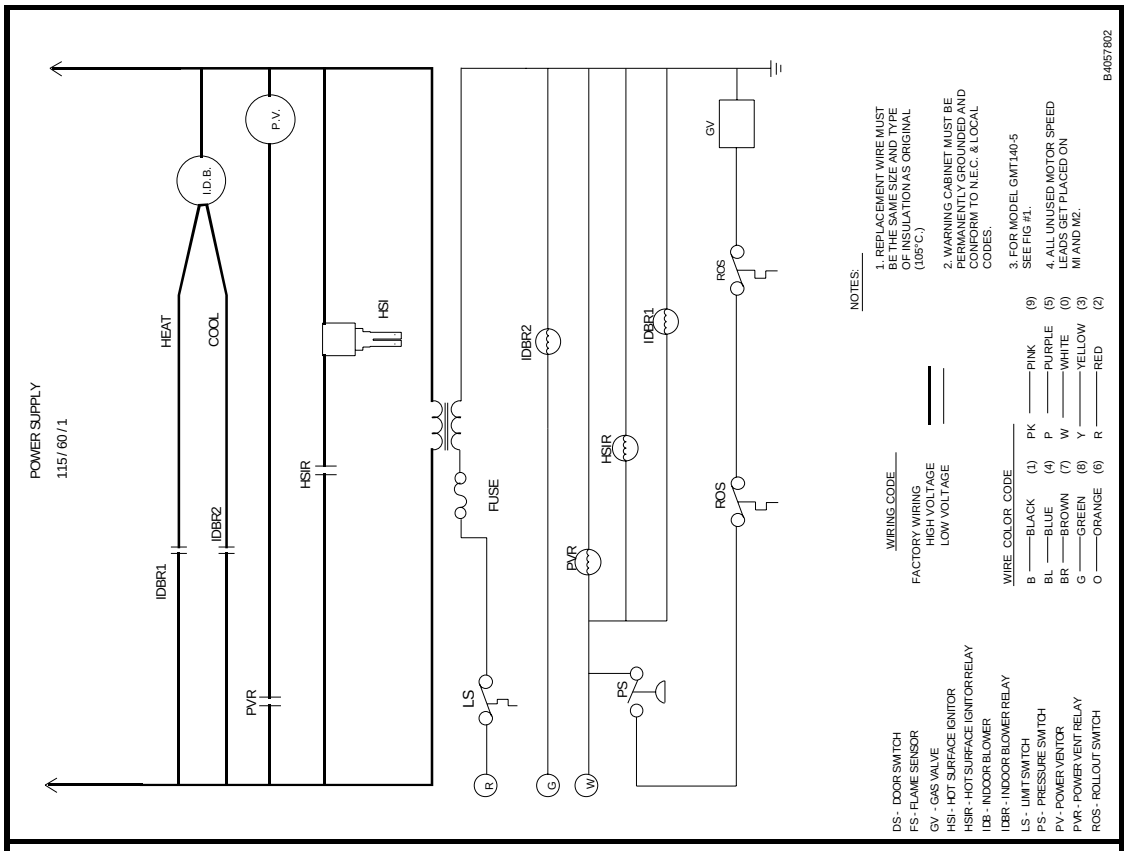

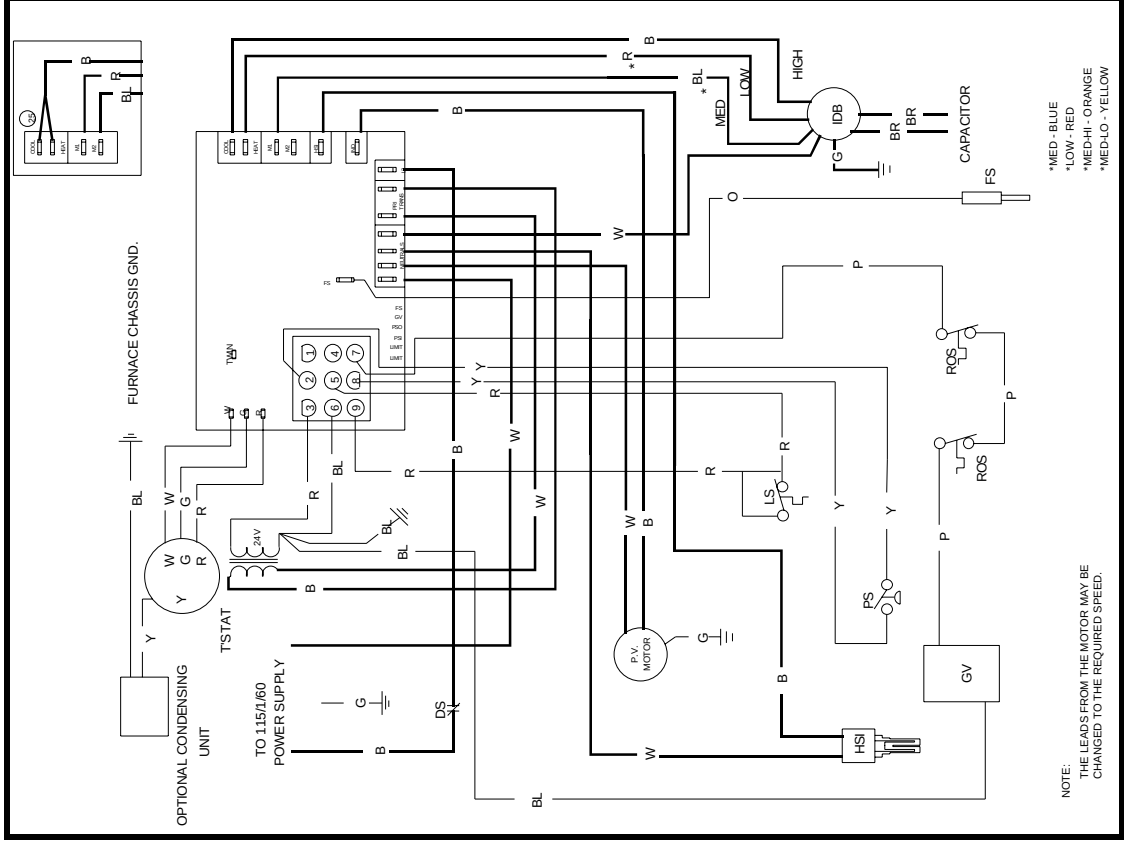

Wiring is subject to change. Always refer to the wiring diagram on the unit for the most up-to-date wiring.

WARNING

HIGH VOLTAGE!
DISCONNECT ALL POWER BEFORE SERVICING OR INSTALLING THIS UNIT. MULTIPLE POWER SOURCES MAY BE PRESENT. FAILURE TO DO SO MAY CAUSE PROPERTY DAMAGE, PERSONAL INJURY OR DEATH.

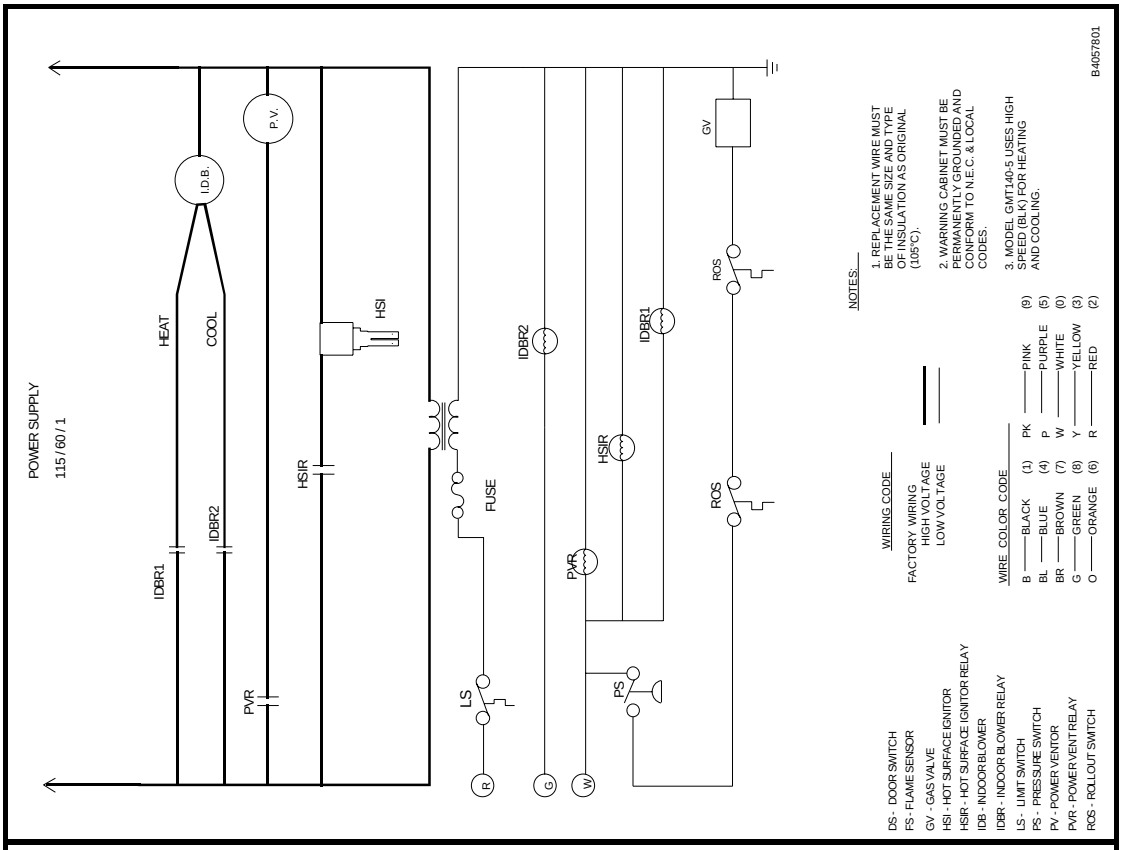

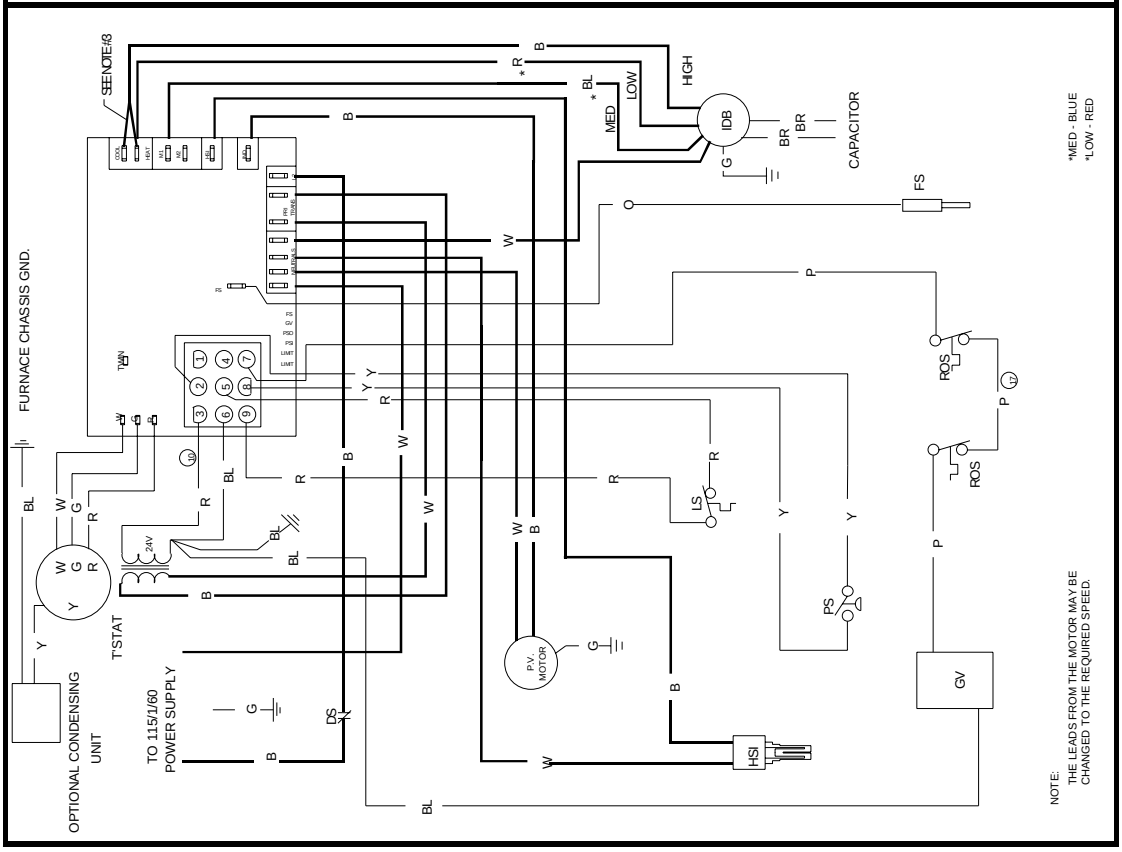

Wiring is subject to change. Always refer to the wiring diagram on the unit for the most up-to-date wiring.

WARNING

HIGH VOLTAGE!
DISCONNECT ALL POWER BEFORE SERVICING OR INSTALLING THIS UNIT. MULTIPLE POWER SOURCES MAY BE PRESENT. FAILURE TO DO SO MAY CAUSE PROPERTY DAMAGE, PERSONAL INJURY OR DEATH.

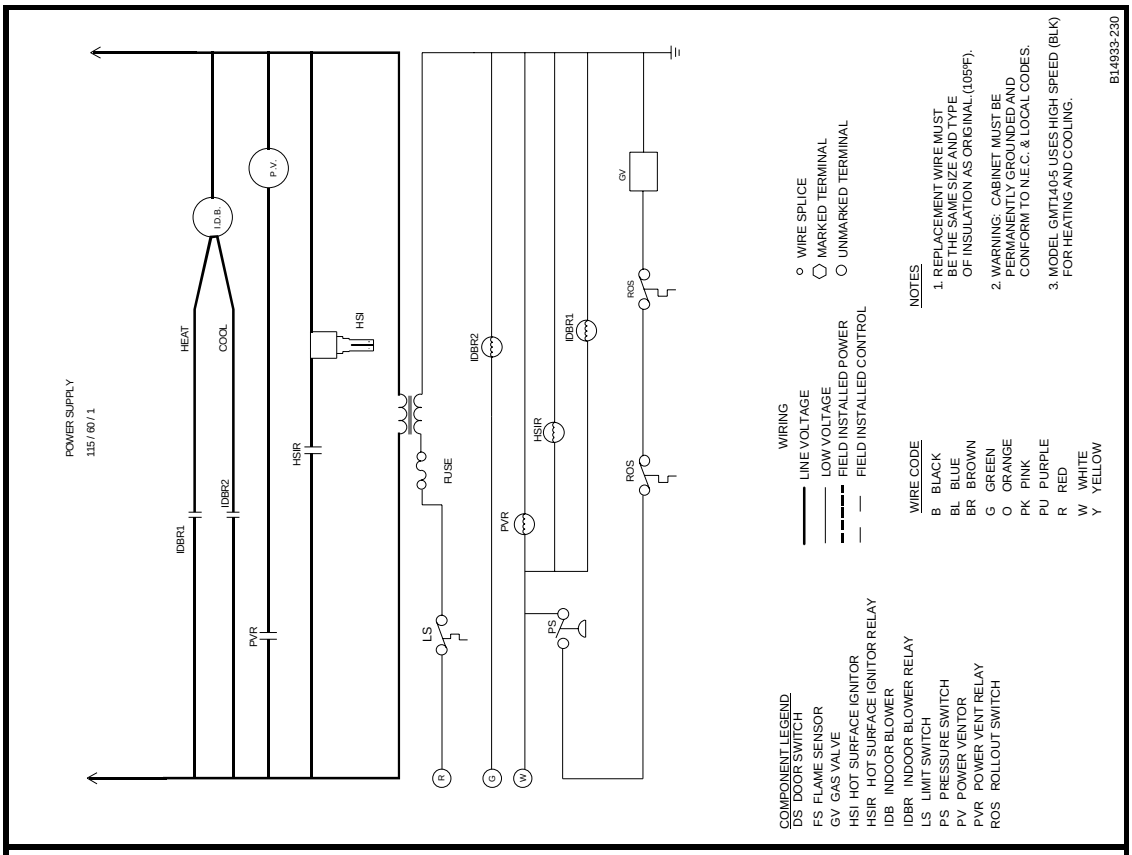

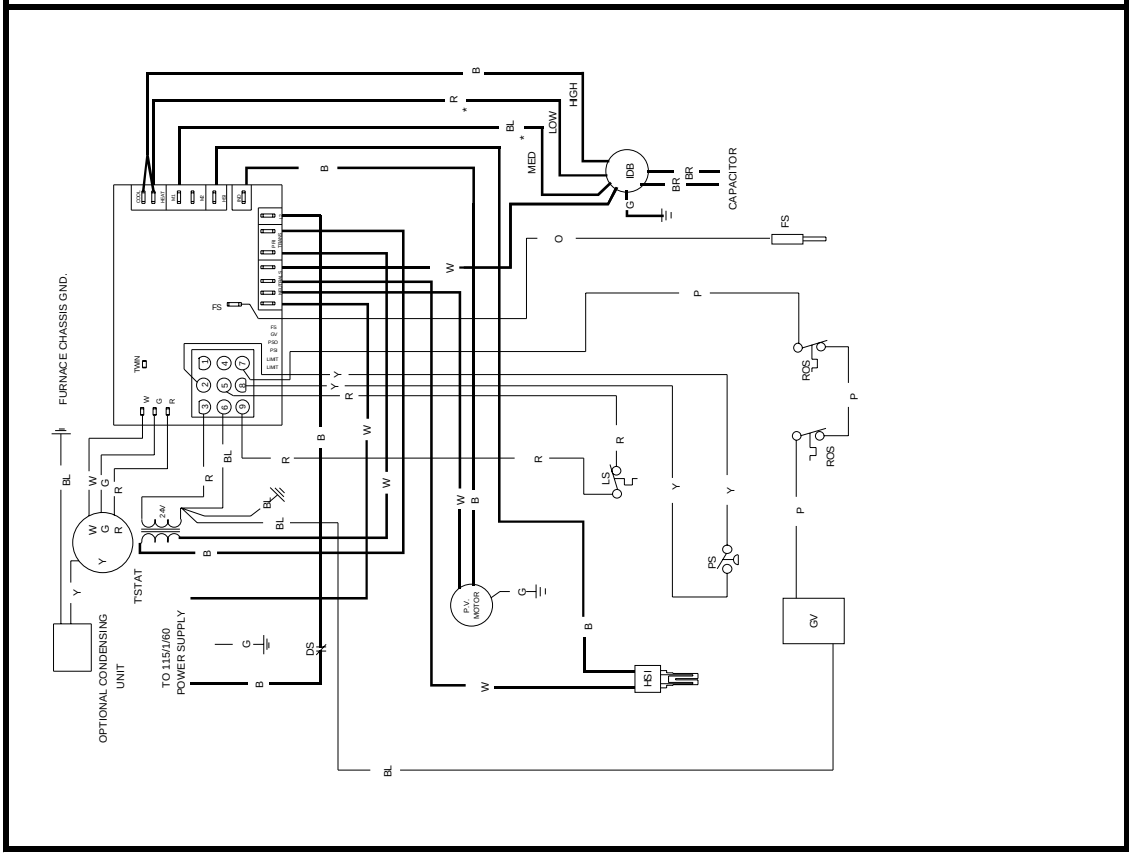

Wiring is subject to change. Always refer to the wiring diagram on the unit for the most up-to-date wiring.

WARNING

HIGH VOLTAGE!
DISCONNECT ALL POWER BEFORE SERVICING OR INSTALLING THIS UNIT. MULTIPLE POWER SOURCES MAY BE PRESENT. FAILURE TO DO SO MAY CAUSE PROPERTY DAMAGE, PERSONAL INJURY OR DEATH.

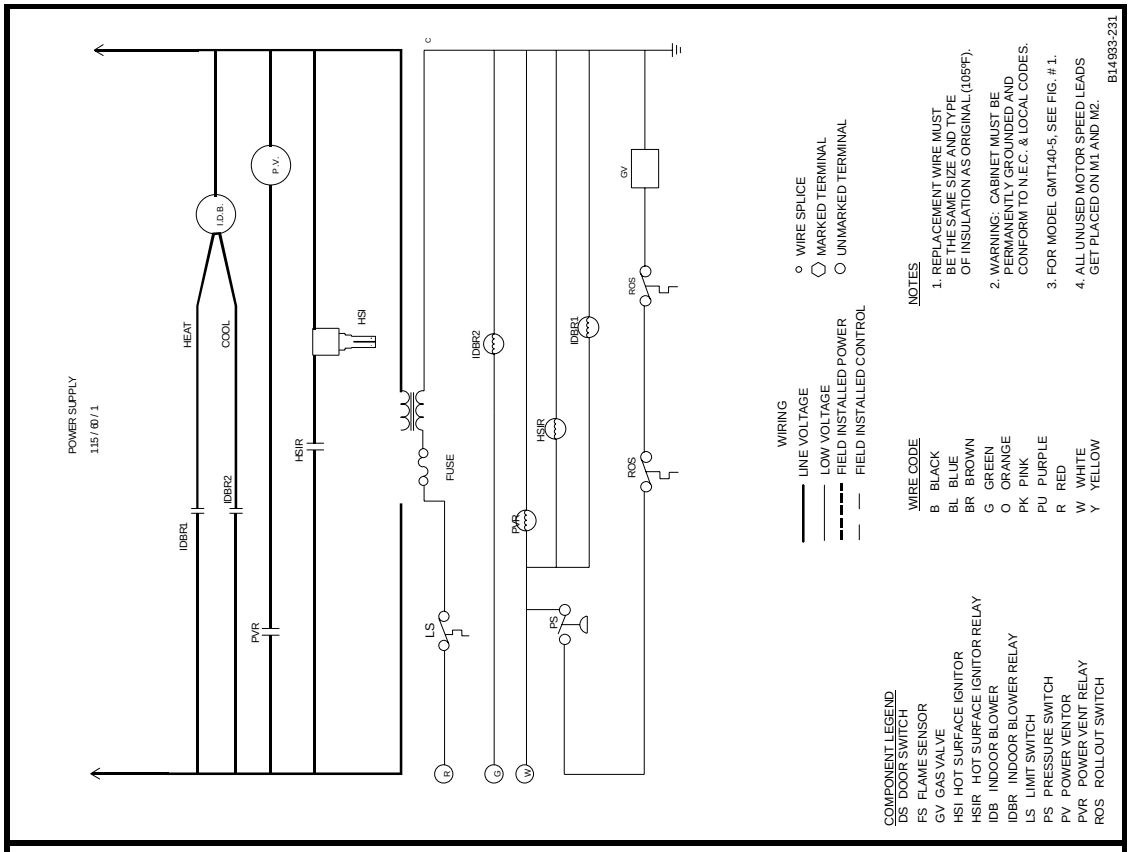

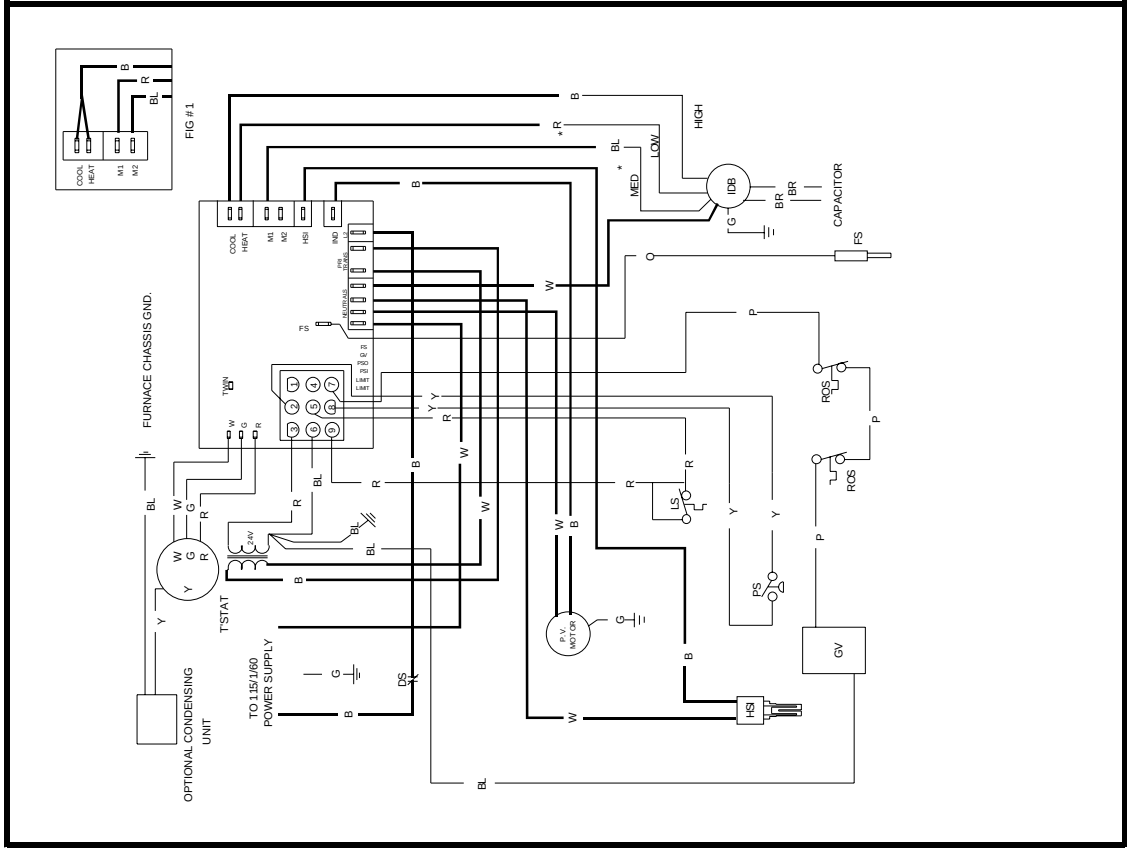

Wiring is subject to change. Always refer to the wiring diagram on the unit for the most up-to-date wiring.

WARNING

HIGH VOLTAGE!
DISCONNECT ALL POWER BEFORE SERVICING OR INSTALLING THIS UNIT. MULTIPLE POWER SOURCES MAY BE PRESENT. FAILURE TO DO SO MAY CAUSE PROPERTY DAMAGE, PERSONAL INJURY OR DEATH.

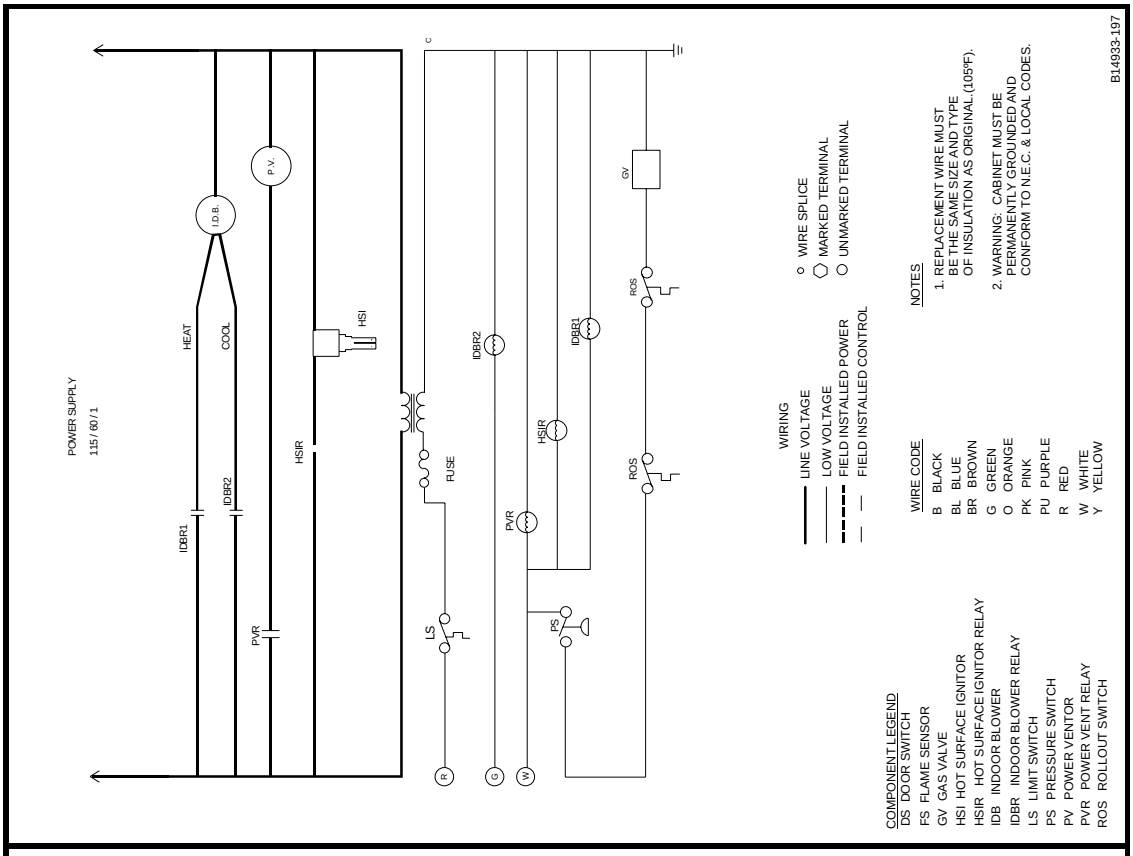

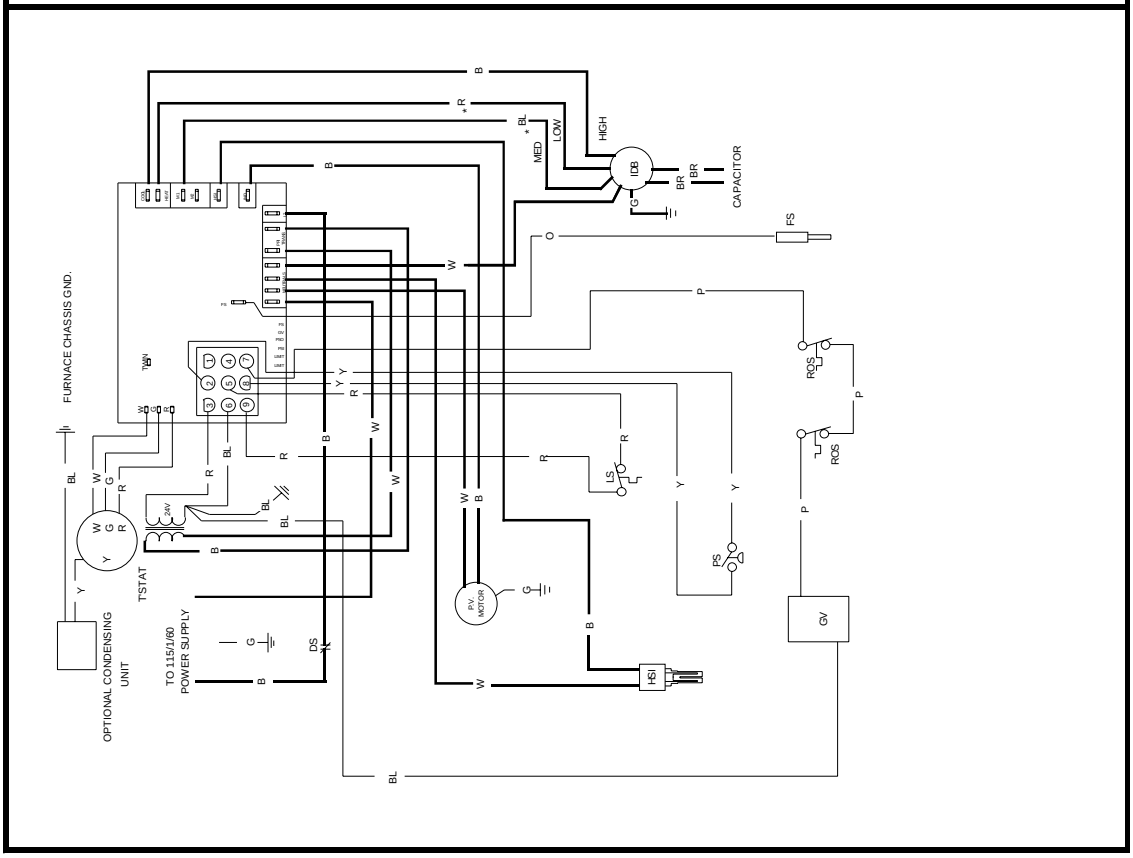

Wiring is subject to change. Always refer to the wiring diagram on the unit for the most up-to-date wiring.

WARNING

HIGH VOLTAGE!
DISCONNECT ALL POWER BEFORE SERVICING OR INSTALLING THIS UNIT. MULTIPLE POWER SOURCES MAY BE PRESENT. FAILURE TO DO SO MAY CAUSE PROPERTY DAMAGE, PERSONAL INJURY OR DEATH.

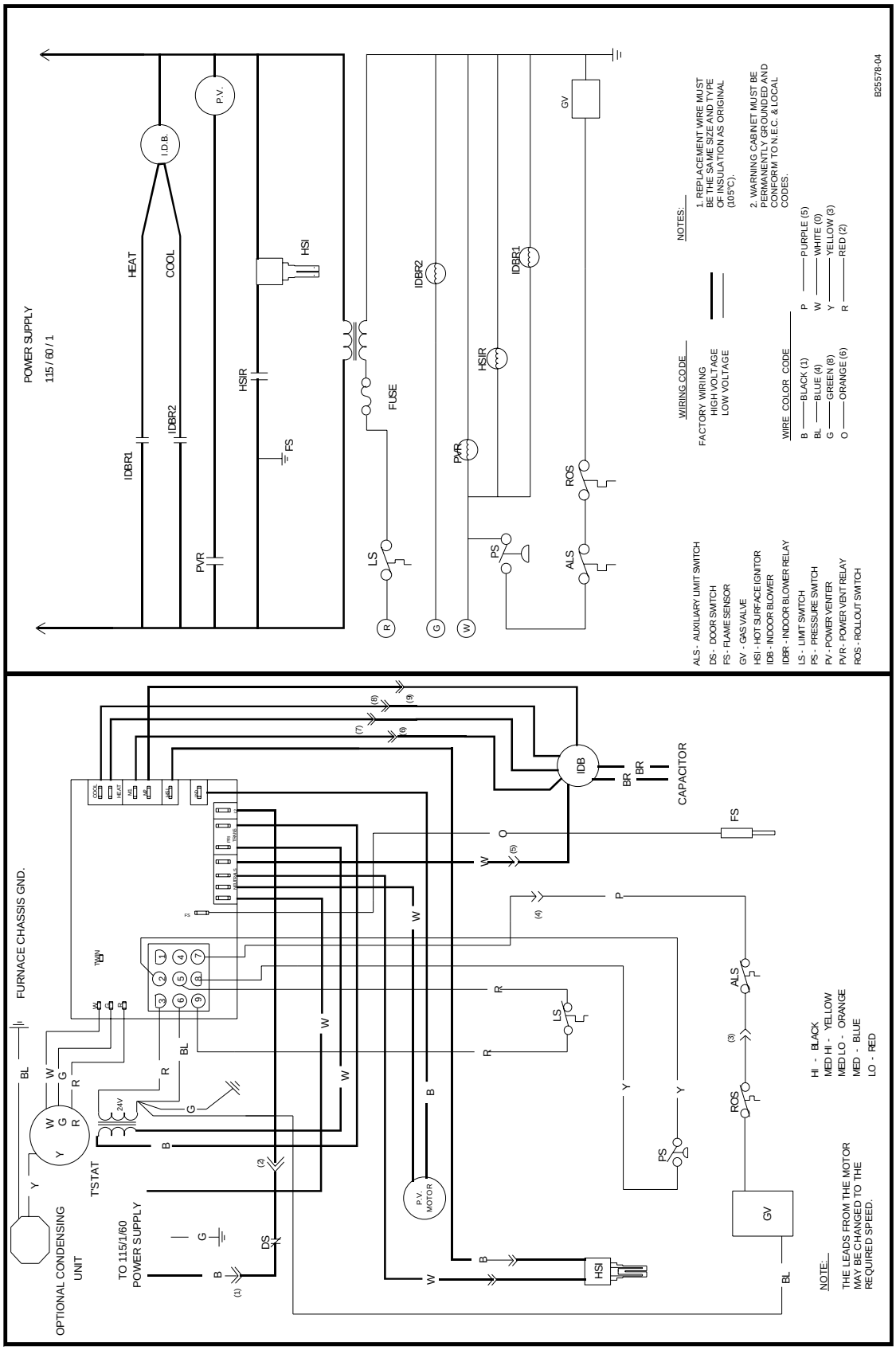

Wiring is subject to change. Always refer to the wiring diagram on the unit for the most up-to-date wiring.

WARNING

HIGH VOLTAGE!
DISCONNECT ALL POWER BEFORE SERVICING OR INSTALLING THIS UNIT. MULTIPLE POWER SOURCES MAY BE PRESENT. FAILURE TO DO SO MAY CAUSE PROPERTY DAMAGE, PERSONAL INJURY OR DEATH.

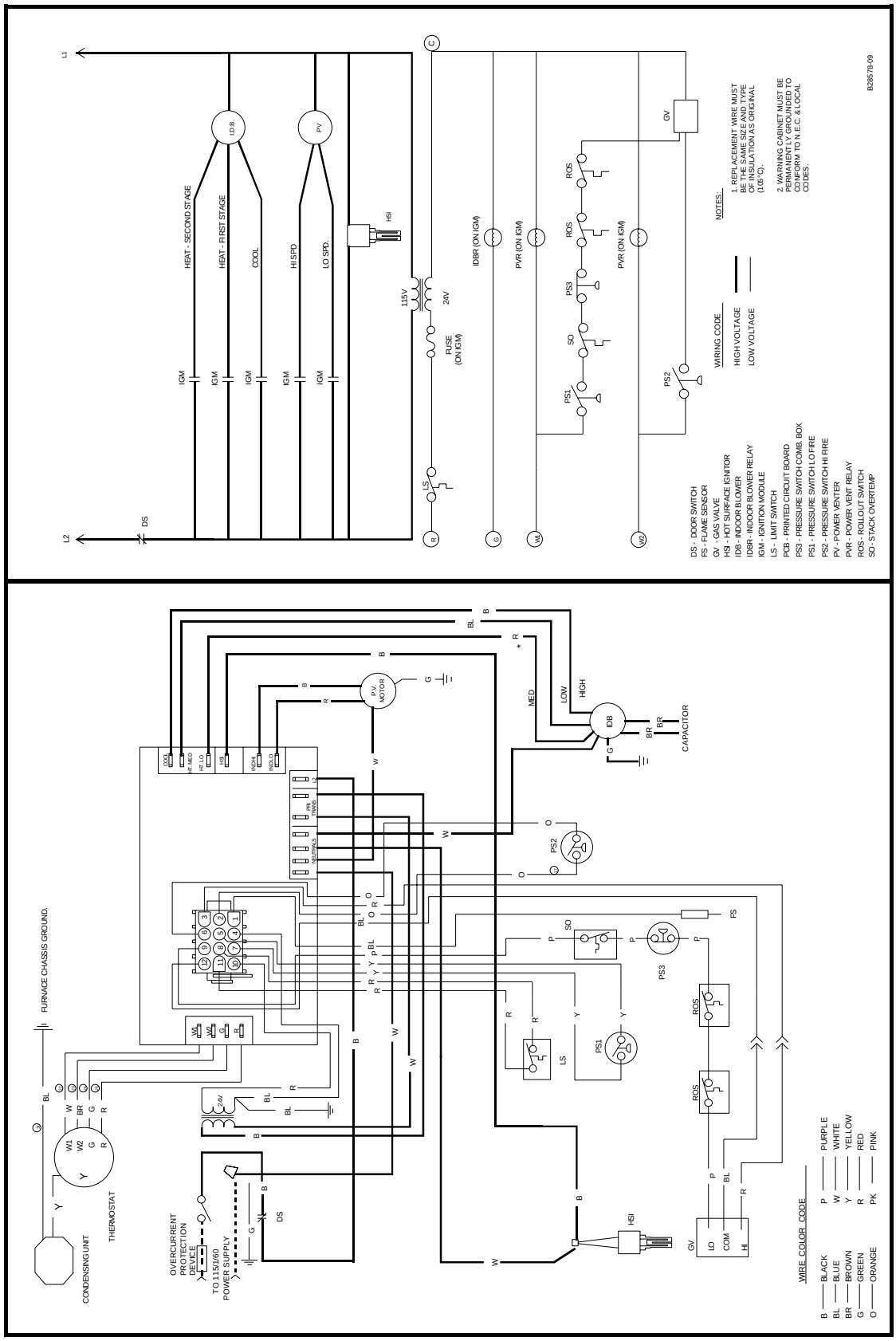

Wiring is subject to change. Always refer to the wiring diagram on the unit for the most up-to-date wiring.

WARNING

HIGH VOLTAGE!
DISCONNECT ALL POWER BEFORE SERVICING OR INSTALLING THIS UNIT. MULTIPLE POWER SOURCES MAY BE PRESENT. FAILURE TO DO SO MAY CAUSE PROPERTY DAMAGE, PERSONAL INJURY OR DEATH.

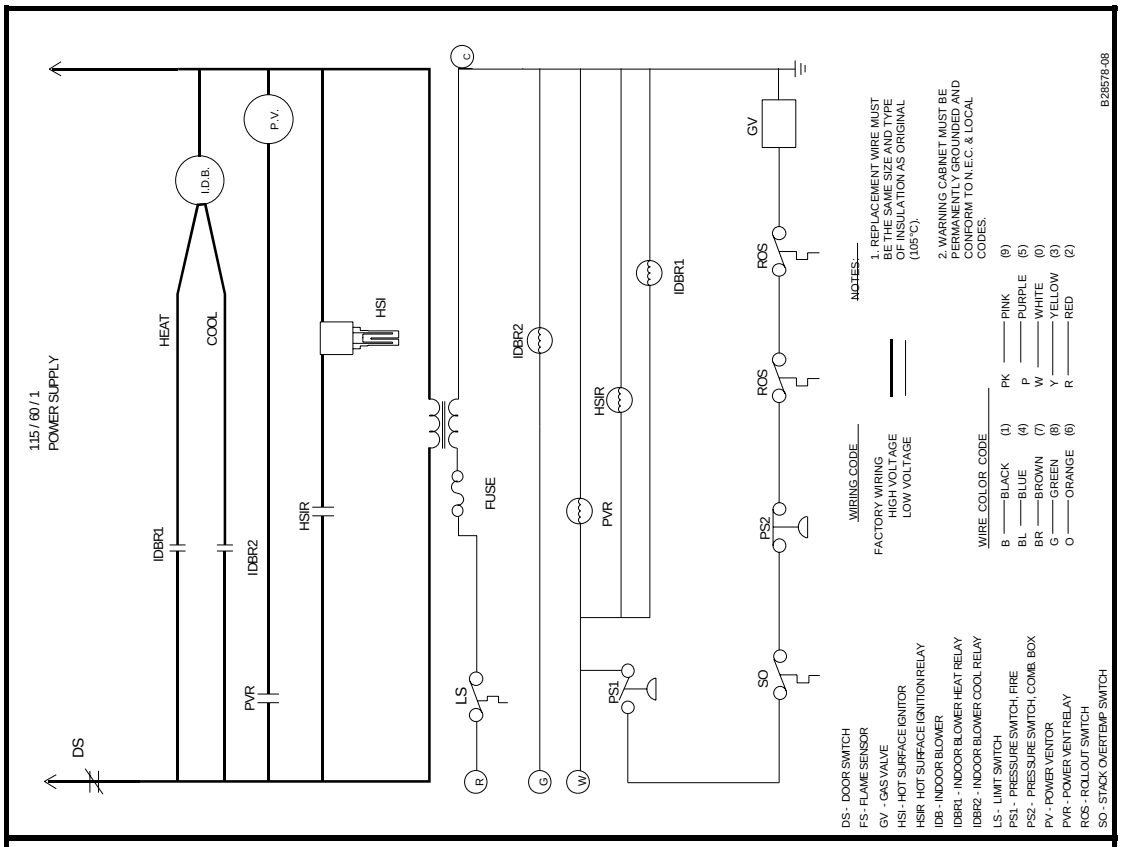

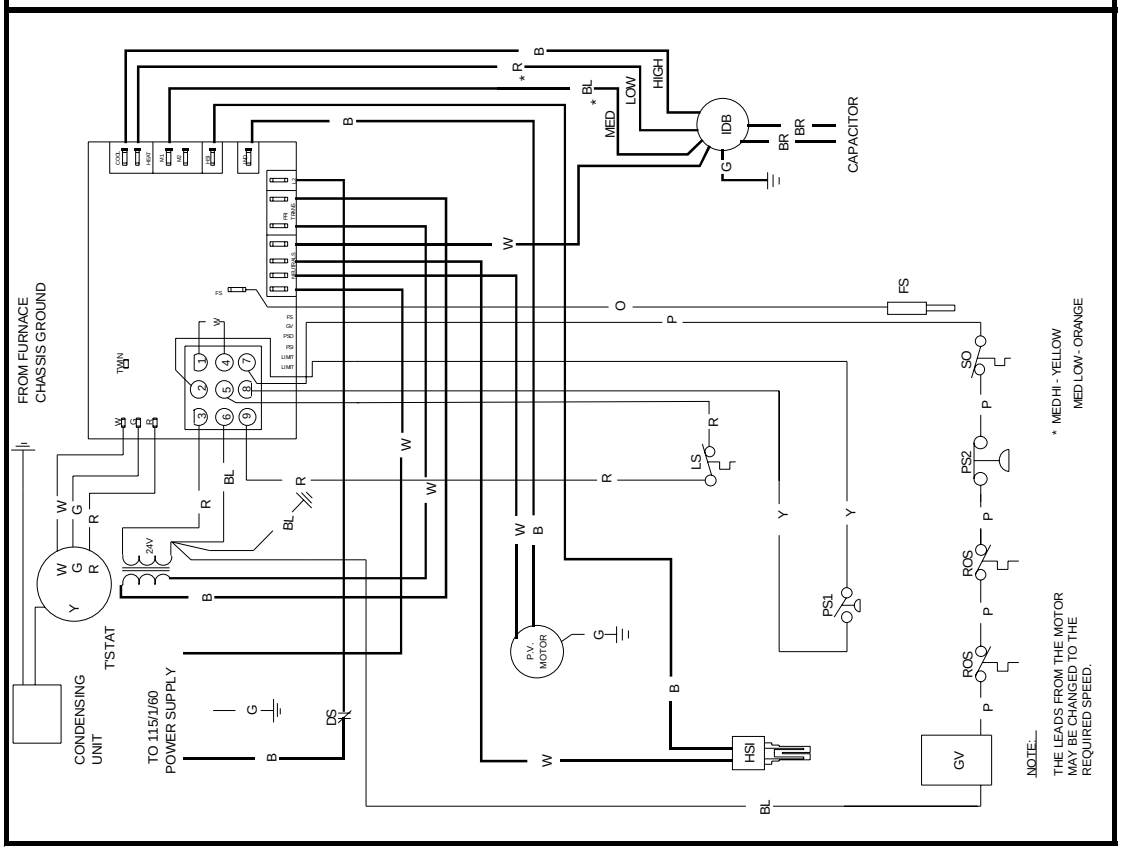

Wiring is subject to change. Always refer to the wiring diagram on the unit for the most up-to-date wiring.

WARNING

HIGH VOLTAGE!
DISCONNECT ALL POWER BEFORE SERVICING OR INSTALLING THIS UNIT. MULTIPLE POWER SOURCES MAY BE PRESENT. FAILURE TO DO SO MAY CAUSE PROPERTY DAMAGE, PERSONAL INJURY OR DEATH.

TWINNING DIAGRAM GSU & GSMS TWO-STAGE THERMOSTAT

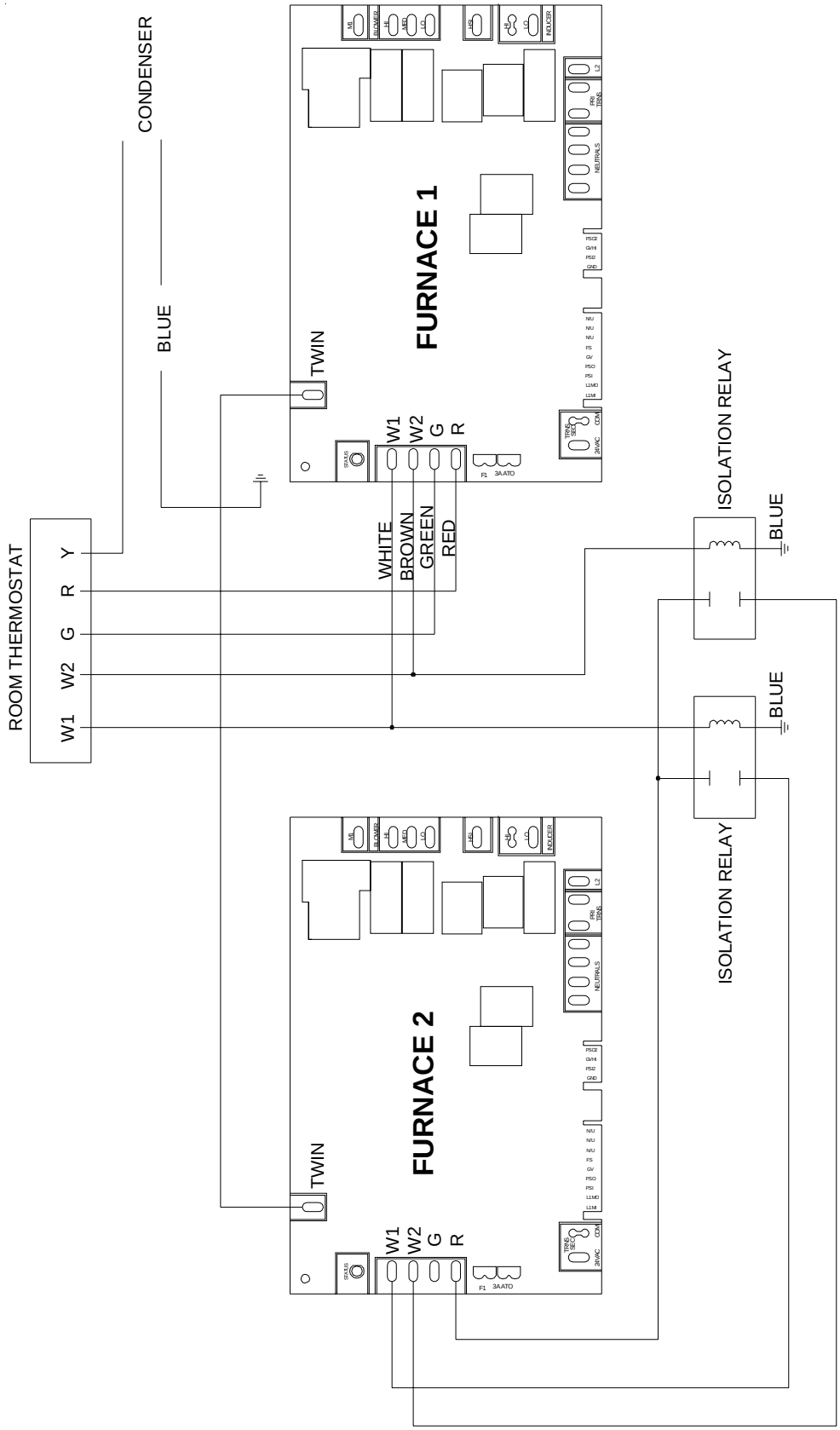

NOTE 1: MUST USE ONE SOURCE OF POWER FOR BOTH FURNACES.

Wiring is subject to change. Always refer to the wiring diagram on the unit for the most up-to-date wiring.

WARNING

HIGH VOLTAGE!
DISCONNECT ALL POWER BEFORE SERVICING OR INSTALLING THIS UNIT. MULTIPLE POWER SOURCES MAY BE PRESENT. FAILURE TO DO SO MAY CAUSE PROPERTY DAMAGE, PERSONAL INJURY OR DEATH.

TWINNING DIAGRAM
GMP, GMPX, GMPN, GMT, GMNT & GSMS
SINGLE-STAGE THERMOSTAT

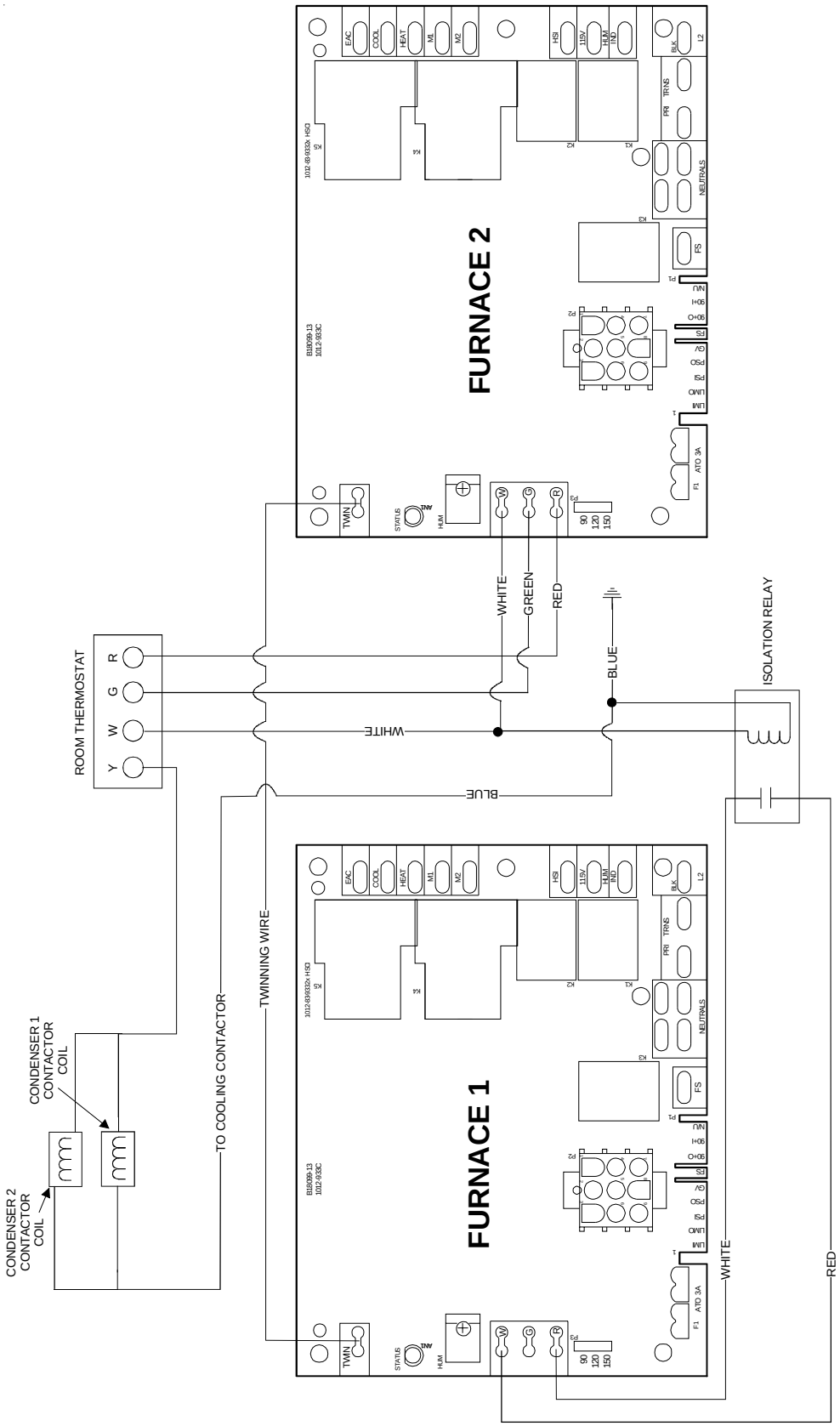

NOTE 1: MUST USE ONE SOURCE OF POWER FOR BOTH FURNACES.
2 : CANNOT BE USED WITH TWO-STAGE FURNACE APPLICATIONS.

Wiring is subject to change. Always refer to the wiring diagram on the unit for the most up-to-date wiring.