Goodman Service Instructions

CPG Gas Electric/CPH Heat Pumps/CPC Cooling Light Commercial Package Units with R-410A Refrigerant 3, 4, 5, 6 & 7.5 Tons & Accessories

B* Revision Models

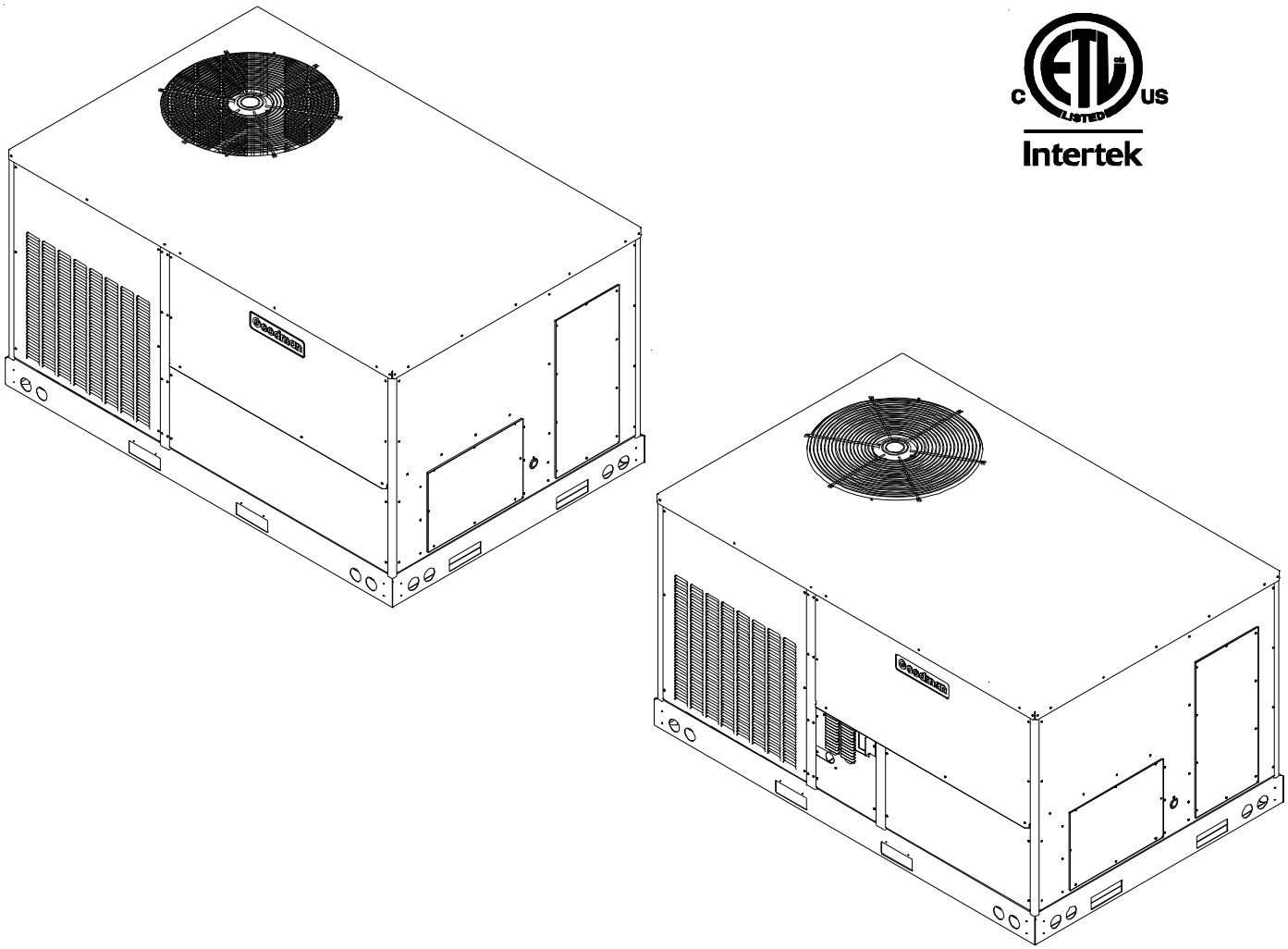

This manual is to be used by qualified, professionally trained HVAC technicians only. Goodman does not assume any responsibility for property damage or personal injury due to improper service procedures or services performed by an unqualified person.

RS6412001r32
July 2013

Copyright © 2008 - 2013 Goodman Manufacturing Company, L.P.

TABLE OF CONTENTS

IMPORTANT INFORMATION ..... 2 - 3
PRODUCTION IDENTIFICATION ..... 4 -9
ACCESSORIES ..... 10 -11, 14-16
LIGHTING INSTRUCTIONS ..... 12 - 13
PRODUCT DESIGN ..... 17 - 27
SYSTEM OPERATION ..... 28 - 35
SCHEDULED MAINTENANCE ..... 36 - 39
TROUBLESHOOTING CHARTS 40-41
SERVICING TABLE OF CONTENTS 42
SERVICING 43-70
ACCESSORIES WIRING DIAGRAMS 71

IMPORTANT INFORMATION

Pride and workmanship go into every product to provide our customers with quality products. It is possible, however, that during its lifetime a product may require service. Products should be serviced only by a qualified service technician who is familiar with the safety procedures required in the repair and who is equipped with the proper tools, parts, testing instruments and the appropriate service manual. **REVIEW ALL SERVICE INFORMATION IN THE APPROPRIATE SERVICE MANUAL BEFORE BEGINNING REPAIRS.**

IMPORTANT NOTICES FOR CONSUMERS AND SERVICERS

RECOGNIZE SAFETY SYMBOLS, WORDS AND LABELS

WARNING

This unit should not be connected to, or used in conjunction with, any devices that are not design certified for use with this unit or have not been tested and approved by Goodman. Serious property damage or personal injury, reduced unit performance and/or hazardous conditions may result from the use of devices that have not been approved or certified by Goodman.

WARNING

Installation and repair of this unit should be performed ONLY by individuals meeting (at a minimum) the requirements of an "Entry Level Technician" as specified by the Air-Conditioning, Heating, and Refrigeration Institute (AHRI). Attempting to install or repair this unit without such background may result in product damage, personal injury, or death.

WARNING

Do not store combustible materials or use gasoline or other flammable liquids or vapors in the vicinity of this appliance as property damage or personal injury could occur. Have your contractor point out and identify the various cut-off devices, switches, etc., that serves your comfort equipment.

WARNING

Goodman will not be responsible for any injury or property damage arising from improper service or service procedures. If you perform service on your own product, you assume responsibility for any personal injury or property damage which may result.

WARNING

HIGH VOLTAGE!
Disconnect ALL power before servicing or installing this unit. Multiple power sources may be present. Failure to do so may cause property damage, personal injury or death.

To locate an authorized servicer, please consult your telephone book or the dealer from whom you purchased this product. For further assistance, please contact:

CONSUMER INFORMATION LINE - GOODMAN® BRAND PRODUCTS
TOLL FREE 1-877-254-4729 (U.S. only)
email us at: customerservice@goodmanmfg.com
fax us at: (713) 856-1821
(Not a technical assistance line for dealers.)

Outside the U.S., call 1-713-861-2500
(Not a technical assistance line for dealers.)
Your telephone company will bill you for the call.

IMPORTANT INFORMATION

SAFE REFRIGERANT HANDLING

While these items will not cover every conceivable situation, they should serve as a useful guide.

WARNING

Refrigerants are heavier than air. They can "push out" the oxygen in your lungs or in any enclosed space.To avoid possible difficulty in breathing or death:

- **Never purge refrigerant into an enclosed room or space. By law, all refrigerants must be reclaimed.**
- **If an indoor leak is suspected, thoroughly ventilate the area before beginning work.**
- **Liquid refrigerant can be very cold. To avoid possible frostbite or blindness, avoid contact with refrigerant and wear gloves and goggles. If liquid refrigerant does contact your skin or eyes, seek medical help immediately.**
- **Always follow EPA regulations. Never burn refrigerant, as poisonous gas will be produced.**

WARNING

To avoid possible explosion:

- **Never apply flame or steam to a refrigerant cylinder. If you must heat a cylinder for faster charging, partially immerse it in warm water.**
- **Never fill a cylinder more than 80% full of liquid refrigerant.**
- **Never add anything other than R-22 to an R-22 cylinder or R-410A to an R-410A cylinder. The service equipment used must be listed or certified for the type of refrigerant used.**
- **Store cylinders in a cool, dry place. Never use a cylinder as a platform or a roller.**

WARNING

To avoid possible injury, explosion or death, practice safe handling of refrigerants.

WARNING

The compressor POE oil for R-410A units is extremely susceptible to moisture absorption and could cause compressor failure. Do not leave system open to atmosphere any longer than necessary for installation.

WARNING

To avoid possible explosion, use only returnable (not disposable) service cylinders when removing refrigerant from a system.

- **Ensure the cylinder is free of damage which could lead to a leak or explosion.**
- **Ensure the hydrostatic test date does not exceed 5 years.**
- **Ensure the pressure rating meets or exceeds 400 lbs.**

When in doubt, do not use cylinder.

WARNING

System contaminants, improper service procedure and/or physical abuse affecting hermetic compressor electrical terminals may cause dangerous system venting.

The successful development of hermetically sealed refrigeration compressors has completely sealed the compressor's moving parts and electric motor inside a common housing, minimizing refrigerant leaks and the hazards sometimes associated with moving belts, pulleys or couplings.

Fundamental to the design of hermetic compressors is a method whereby electrical current is transmitted to the compressor motor through terminal conductors which pass through the compressor housing wall. These terminals are sealed in a dielectric material which insulates them from the housing and maintains the pressure tight integrity of the hermetic compressor. The terminals and their dielectric embedment are strongly constructed, but are vulnerable to careless compressor installation or maintenance procedures and equally vulnerable to internal electrical short circuits caused by excessive system contaminants.

In either of these instances, an electrical short between the terminal and the compressor housing may result in the loss of integrity between the terminal and its dielectric embedment. This loss may cause the terminals to be expelled, thereby venting the vaporous and liquid contents of the compressor housing and system.

A venting compressor terminal normally presents no danger to anyone, providing the terminal protective cover is properly in place.

If, however, the terminal protective cover is not properly in place, a venting terminal may discharge a combination of

(a) hot lubricating oil and refrigerant

(b) flammable mixture (if system is contaminated with air)

in a stream of spray which may be dangerous to anyone in the vicinity. Death or serious bodily injury could occur.

Under no circumstances is a hermetic compressor to be electrically energized and/or operated without having the terminal protective cover properly in place.

See Service Section S-17 for proper servicing.

PRODUCT IDENTIFICATION

C	P	C	240	60	3	B	*	*	*	A	*
1	2	3	4, 5, 6	7, 8, 9	10	11	12	13	14	15	16

Brand

C Commercial

Configuration

P Packaged Unit

Application

C Cooling
G Gas Heat
H Heat Pump

Nominal Gross Cooling Capacity

036	3 Tons	102	8½ Tons
048	4 Tons	120	10 Tons
060	5 Tons	150	12½ Tons
072	6 Tons	180 & 181	15 Tons
090	7½ Tons	240	20 Tons

Nominal Heating Capacity

CPG		CPC/CPH (Factory-Installed Electric Heat)			
045	45,000 BTU/h	XXX	No Heat		
090	90,000 BTU/h	010	10 kW	030	30 kW
115	115,000 BTU/h	015	15 kW	031	30 kW
140	140,000 BTU/h	016	15 kW	045	45 kW
210	210,000 BTU/h	018	18 kW	046	46 kW
350	350,000 BTU/h	020	20 kW	060	60 kW
400	400,000 BTU/h	025	25 kW	075	75 kW

Voltage

1	208V 1-Phase	4	460V 3-Phase
3	208v 3-Phase	7	575V 3-Phaze

Supply Fan/Drive Type/Motors

B Belt Drive
D Direct Drive
H High-Static Belt Drive (Factory-Installed)

Factory-Installed Options

X No Options
A Downflow Economizer
H Disconnect Switch (non-fused)
J Downflow Economizer ; Disconnect Switch (non-fused)

Factory-Installed Options

X No Options
A Non-powered convenience outlet
B Powered convenience outlet
C Low Ambient Kit
D Return air smoke detector
E Supply air smoke detector
F Non-powered convenience outlet; Low Ambient Kit
G Non-powered convenience outlet; Return air smoke detector
H Non-powered convenience outlet; Supply air smoke detector
J Non-powered convenience outlet; Return & Supply air smoke detectors
K Non-powered convenience outlet; Low-ambient kit; Supply air smoke detector
L Non-powered convenience outlet; Low Ambient Kit; Return & Supply air smoke detectors
M Powered convenience outlet; Low Ambient Kit
N Powered convenience outlet; Return air smoke detector
O Powered convenience outlet; Return & Supply air smoke detectors
P Powered convenience outlet; Supply air smoke detector
Q Powered convenience outlet; Low Ambient Kit; Return air smoke detector
R Powered convenience outlet; Low Ambient Kit; Supply air smoke detector
T Powered convenience outlet; Low Ambient Kit; Return & Supply air smoke detectors
V Low Ambient Kit; Return air smoke detector
W Low Ambient Kit; Return & Supply air smoke detectors
Y Low Ambient Kit; Return & Supply air smoke detectors
Z Return & Supply air smoke detectors

Factory-Installed Options

X Standard Aluminized Heat Exchanger
A Condenser Coil Hail Guard
B Condenser Coil Hail Guard Treated Condenser Coil (UltraGold)
C Condenser Coil Hail Guard Stainless Steel Heat Exchanger
D Condenser Coil Hail Guard Treated Condenser Coil (UltraGold) Stainless Steel Heat Exchanger
J Treated Condenser Coil (UltraGold)
S Stainless Steel Heat Exchanger
T Treated Condenser Coil (UltraGold) Stainless Steel Heat Exchanger

Revision Levels

Major & Minor

PRODUCT IDENTIFICATION CPH***XXX**XXX

Light Commercial Multiposition Package Heat Pumps	
Model #	**Description**
CPHXXXXXX*DXXXBA	Light **C**ommercial **P**ackage **H**eat Pump, Multiposition heat pump units, 208V-230V 1 Phase, 208V-230V 3 Phase and 460V 3 Phase Direct Drive. Initial release of 3-5 ton models with reduction in height & length.
CPHXXXXXX*BXXXBA	Light **C**ommercial **P**ackage **H**eat Pump, Multiposition heat pump units, 208V-230V 1 Phase, 208V-230V 3 Phase, 460V 3 Phase and 575V 3 Phase Belt Drive. Initial release of 3-5 ton models with reduction in height & length.
CPHXXXXXX*DXJXBA	Light **C**ommercial **P**ackage **H**eat Pump, Multiposition heat pump units, 208V 1 Phase, 208V-230V 3 Phase. Initial release of 3-5 ton models with reduction in height & length with Ultra Gold condenser coil [J].
CPHXXXXXX*BXJXBA	Light **C**ommercial **P**ackage **H**eat Pump, Multiposition heat pump units, 208V 1 Phase, 208V-230V 3 Phase, 460V 3 Phase Belt, 575V 3 Phase Belt Drive. Initial release of 3-5 ton models with reduction in height & length with Ultra Gold condenser coil [J] or stai
CPH072XXX*BXXXBA	Light **C**ommercial **P**ackage **H**eat Pump, Multiposition heat pump units, 208V-230V 3 Phase, 460V 3 Phase and 575V 3 Phase Belt Drive. Initial release of 6 ton models with 4" increase in height.
CPH090XXX*BXXXBA	Light **C**ommercial **P**ackage **H**eat Pump, Multiposition heat pump units, 208V-230V 3 Phase, 460V 3 Phase and 575V 3 Phase Belt Drive. Release of 7.5 ton models with smaller, redesigned condenser coil.
CPH[036-060]XXX*DXXXBB CPH[036-060]XXX*DXJXBB CPH[036-072]XXX*BXXXBB CPH[036-072]XXX*BXJXBB	Light **C**ommercial **P**ackage **H**eat Pump, Multiposition heat pump units, 208V-230 3 Phase, 460V 3 Phase & 575V 3 Phase, Standard, Belt / Direct Drive, Ultra Gold condenser coil {J} and with the addition of the crankcase heater where necessary.
CPH048XXX3BXXBBB CPH060XXX3DXXBBB	Light **C**ommercial **P**ackage **H**eat Pump, Multiposition heat pump units, 208V-230 3 Phase, Belt / Direct Drive with factory installed powered convience outlet.
CPH0600153DXJXBA	Light **C**ommercial **P**ackage **H**eat Pump, Multiposition heat pump units, 208V-230 3 Phase, Direct Drive. Initial release of 5 ton models with Ultra Gold Condenser coils and 15kW E-Heat.
CPH0360103HXJXBB CPH0480103HXJXBB CPH0600103HXJXBB CPH0720103HXJXBB	Light **C**ommercial **P**ackage **H**eat Pump, Multiposition heat pump units, 208V-230 3 Phase, High Static Belt Drive. Initial release of 3 - 6 ton models with Ultra Gold Condenser coils.
CPH072XXX3BHXZBB	Light **C**ommercial **P**ackage **H**eat Pump, Multiposition heat pump units, 208V-230 3 Phase, Belt Drive. Initial release of 6 ton models with factory installed disconnect switch(non-fused), standard aluminized heat exchanger and return & supply air smoke detector
CPH060XXX3BJABBA	Light **C**ommercial **P**ackage **H**eat Pump, Multiposition heat pump units, 208V-230 3 Phase, Belt Drive. Initial release of 5 ton models with factory installed economizer, disconnect switch(non-fused), hail guard and powered convenience outlet.
CPH0600203DHXXBB	Light **C**ommercial **P**ackage **H**eat Pump, Multiposition heat pump units, 208V-230 3 Phase, Direct Drive. Initial release of 5 ton models with factory installed disconnect switch(non-fused).

These units have R410A refrigerant

PRODUCT IDENTIFICATION CPC***XXX**XXX

Light Commercial Multiposition Package Coolers	
Model #	**Description**
CPCXXXXXX*DXXXBA	Light Commercial Package Cooler, Multiposition cooling, 208V-230V 1 Phase, 208V-230V 3 Phase and 460V 3 Phase Direct Drive. Initial release of 3-5 ton models with reduction in height & length.
CPCXXXXXX*BXXXBA	Light Commercial Package Cooler, Multiposition cooling, 208V-230V 3 Phase, 460V 3 Phase or 575V 3 Phase Belt Drive. Initial release of 3-5 ton models with reduction in height & length.
CPCXXXXXX*DXJXBA	Light Commercial Package Cooler, Multiposition cooling, 208V-230V 1 Phase, 208V-230V 3 Phase. Initial release of 3-5 ton models with reduction in height & length with Ultra Gold condenser coil [J].
CPCXXXXXX*BXJXBA	Light Commercial Package Cooler, Multiposition cooling, 208V-230V 1 Phase, 208V-230V 3 Phase, 460V 3 Phase Belt, 575V 3 Phase Belt Drive. Initial release of 3-5 ton models with reduction in height & length with Ultra Gold condenser coil [J].
CPC072XXX*BXXXBA	Light Commercial Package Cooler, Multiposition cooling, 208V-230V 3 Phase, 460V 3 Phase or 575V 3 Phase Belt Drive. Initial release of 6 ton models with 4" increase in height.
CPC090XXX*BXXXBA	Light Commercial Package Cooler, Multiposition cooling, 208V-230V 3 Phase, 460V 3 Phase or 575V 3 Phase Belt Drive. Release of 7.5 ton models with smaller, redesigned condenser coil.
CPC0360103HXBCBA CPC0480103HXBCBA CPC0600103HXBCBA CPC0720103HXBCBA	Light Commercial Package Cooler, Multiposition cooling, 208-230V 3 Phase, High Static Belt Drive. Release of 3, 4, 5 and 6 ton models with factory installed e-heat, Ultra Gold condenser coils, hail guard and low ambient kit.
CPC0720153BXXXBA	Light Commercial Package Cooler, Multiposition cooling, 208V-230V 3 Phase Belt Drive. Initial release of 6 ton models with factory installed electric heat.
CPC090XXX3BXXFBA	Light Commercial Package Cooler, Multiposition cooling, 208V-230V 3 Phase, Belt Drive. Release of models with factory installed low ambient kit and non-powered convenience outlet.
CPC0360103BXACBA	Light Commercial Package Cooler, Multiposition cooling, 208V-230V 3 Phase, Belt Drive. Release of 3 ton models with 10kW E-Heat, hail guards and low ambient kit.
CPC060XXX3BXXABA	Light Commercial Package Cooler, Multiposition cooling, 208-230V 3 Phase Belt Drive. Initial release of 5 ton models with factory installed non-powered convenience outlet.
CPC0601403BASXBA	Light Commercial Package Cooler, Multiposition cooling, 208-230V 3 Phase, Belt Drive. Release of 5 ton models with factory installed downflow economizer and stainless steel heat exchanger.
CPC036XXX4HXXXBA CPC072XXX4HXXXBA	Light Commercial Package Cooler, Multiposition cooling, 460V 3 Phase, High Static Belt Drive. Release of 3 & 6 ton models with factory installed high static kit.
CPC0600154HXAMBA	Light Commercial Package Cooler, Multiposition cooling, 460V 3 Phase, High Static Belt Drive. Initial release of 5 ton models with factory installed hail guard, low ambient kit and powered convenience outlet.
CPC090XXX4BXXXBB CPC090XXX7BXXXBB	Light Commercial Package Cooler, Multiposition cooling, 460V 3 Phase and 575V 3 Phase, Belt Drive. Release of 7.5 ton models with various panel changes to improve stripped screw issues (including the blower access panel and control box panel).
CPC0360104BXXABA CPC0480104BXXABA	Light Commercial Package Cooler, Multiposition cooling, 460V 3 Phase, Belt Drive. Release of 3 and 4 ton models with factory installed e-heat and non-powered convenience outlet.
CPC0360104BAXCBA CPC0720104BAXCBA CPC0900164BAXCBB	Light Commercial Package Cooler, Multiposition cooling, 460V 3 Phase, Belt Drive. Release of 3, 6 and 7.5 ton models with factory installed e-heat, downflow economizer and low ambient kit.
CPC072XXX7HXXXBA	Light Commercial Package Cooler, Multiposition cooling, 575V 3 Phase High Static Belt Drive. Initial release of 6 ton models.
CPC036XXX4BXXBBA CPC048XXX4BXXBBA	Light Commercial Package Cooler, Multiposition cooling, 460V 3 Phase Belt Drive. Initial release of 3 & 4 ton models with factory installed powered convenience outlet.
CPC0900304HXBXBB	Light Commercial Package Cooler, Multiposition cooling, 460V 3 Phase, High Static Belt Drive. Release of 7.5 ton models with factory installed Ultragold condneser coils and hail guards.
CPC0360103DHXCBA	Light Commercial Package Cooler, Multiposition cooling, 280V 3 Phase, 3 ton models with 10kW Electric heater, Direct Drive, Disconnect Switch (non fused), Low Ambient kit.
CPC0600203DJXMCA	Light Commercial Package Cooler, Multiposition cooling, 280V 3 Phase,5 ton models with 20 kW Electric heater, Direct Drive, Down flow Economizer, Disconnect Switch (non fused), Powered convience outlet, Low Ambient kit.
CPC0360103BHXCBA CPC0480103BHXCBA CPC0600103BHXCCA CPC0720103BHXCCA	Light Commercial Package Cooler, Multiposition cooling, 208V 3 Phase, 10 kW Electric Heat, Belt Drive. 3, 4, 5 and 6 ton models with Disconnect switch (Non-Fused), Low ambient kit.

These units have R410A refrigerant

PRODUCT IDENTIFICATION

CPG***XXX**XXX

Light Commercial Multiposition Package Gas	
Model #	**Description**
CPGXXXXXX*DXXXBA	Light **C**ommercial **P**ackage **G**as, R410A gas/electric units, 208V-230V 1 phase, 208-230V 3 Phase. Initial release of 3-5 ton models with reduction in height & length.
CPGXXXXXX*BXXXBA	Light **C**ommercial **P**ackage **G**as R410A gas/electric units, 208V-230V 3 Phase, 460V 3 phase and 575V 3 phase, Belt Drive. Initial release of 3-5 ton models with reduction in height & length.
CPGXXXXXX*DX[J/S]XBA	Light **C**ommercial **P**ackage **G**asR410A gas/electric units,208V-230V 1 phase, 208V-230V 3 Phase. Initial release of 3-5 ton models with reduction in height & length with Ultra Gold condenser coil [J] or stainless steel heat exchanger [S].
CPGXXXXXX*BX[J/S]XBA	Light **C**ommercial **P**ackage **G**as R410A gas/electric units, 208V 1 phase, 208V-230 3 Phase, 460V 3 phase Belt, 575V 3 Phase Belt Drive. Initial release of 3-5 ton models with reduction in height & length with Ultra Gold condenser coil [J] or stainless steel heat exchanger.
CPG072140*BXXXBA	Light **C**ommercial **P**ackage **G**as R410A gas/electric units, 208V-230V 3 Phase, 460V 3 phase and 575V 3 phase, Belt Drive. Initial release of 6 ton models with 4" increase in height.
CPG090210*BXXXBA	Light **C**ommercial **P**ackage **G**as R410A gas/electric units, 208V-230V 3 Phase, 460V 3 phase and 575V 3 phase, Belt Drive. Release of 7.5 ton models with smaller, redesigned condenser coil.
CPG090210*BXXXBB	Light **C**ommercial **P**ackage **G**as R410A gas/electric units, 208V-230V 3 Phase, 460V 3 phase and 575V 3 phase, Belt Drive. Release of 7.5 ton models with various panel changes to improve stripped screw issues (including the blower access panel and control box panels)
CPG0360901DXTXBA CPG0601403DXTXBA	Light **C**ommercial **P**ackage **G**as R410A gas/electric units, 208V-230V 1-Phase, Direct Drive (3 Ton) & 3 Phase, Direct Drive (5 Ton). Initial release of 3 & 5 T models w/factory installed SS heat exchanger & Ultra Gold Condenser Coil.
CPG0360901DXCXBA CPG0480901DXCXBA CPG0600901DXCXBA	Light **C**ommercial **P**ackage **G**as R410A gas/electric units, 208-230V 1 Phase, Direct Drive. Release of 3-5 ton models with factory installed SS heat exchanger and hail guards.
CPG0480904BHXUBA	Light **C**ommercial **P**ackage **G**as R410A gas/electric units, Belt Drive, 460V 3 Phase, 4 ton model with Disconnect switch (Non Fused), Non Powered Convenience outlet, Low Ambient Kit, Return Air smoke detector.
CPG0600901DAABBA	Light **C**ommercial **P**ackage **G**as R410A gas/electric units, 208V Single Phase, Direct Belt Drive. Release of 5 ton models with factory installed condenser coil hail guard, downflow economizer and powered convenience outlet.
CPG0360903DXAXBA CPG0480903DXAXBA CPG0601403DXAXBA	Light **C**ommercial **P**ackage **G**as R410A gas/electric units, 208V-230 3 Phase, Direct Drive. Initial release of 3, 4 & 5 ton models w/factory installed Hail Guards.
CPG0601403DXADBA	Light **C**ommercial **P**ackage **G**as R410A gas/electric units, 208V-230V 3-Phase, Direct Drive. Initial release 5 ton models with factory installed hail guard and return air smoke detector.
CPG0360903HXXXBA CPG0481153HXXXBA CPG0480903HXXXBA CPG0601403HXXXBA CPG0721403HXXXBA CPG0902103HXXXBA	Light **C**ommercial **P**ackage **G**as R410A gas/electric units, 208V-230V 3 Phase High Static Belt Drive. Release of 3 - 7.5 ton models with factory installed high static kit.
CPG0601403HAACBA	Light **C**ommercial **P**ackage **G**as R410A gas/electric units, Hi Static Belt Drive. Release of 5 ton with factory installed Hi-Static kit, downflow economizer, hail guards and low ambient kit.
CPG0600904BHXUCA	Light **C**ommercial **P**ackage **G**as R410A gas/electric units, Belt Drive. 460V 3 Phase, 5 ton model with Disconnect switch (Non Fused), Non Powered Convenience outlet, Low Ambien Kit, Return Air smoke detector.
CPG0481153HAAXBA CPG0601403HAAXBA CPG0721403HAAXBA CPG0902103HAAXBB	Light **C**ommercial **P**ackage **G**as R410A gas/electric units, 208V-230V 3 Phase, High Static Belt Drive. Release of 4 - 7.5 ton models with factory installed hail guard, economizer and high static kit.
CPG09002103HAABBB	Light **C**ommercial **P**ackage **G**as R410A gas/electric units, 208V-230V 3-Phase, High Static Belt Drive. Release of 7.5 ton models with factory installed condenser coil hail guard, downflow economizer and powered convenience outlet.
CPG0360903HACMBA CPG0481153HACMBA CPG0601403HACMBA	Light **C**ommercial **P**ackage **G**as R410A gas/electric units, 208V-230V 3-Phase, High Static Belt Drive. Initial release 3 - 5 ton models with factory installed economizer, hail guard, stainless steel heat exchanger, powered convenience outlet and low ambient kit.
CPG0902103BXAXBA	Light **C**ommercial **P**ackage **G**as R410A gas/electric units, 208V-230 3 Phase, Belt Drive. Initial release of 7.5 ton models w/factory installed Hail Guards.
CPG0360903BXXABA CPG0481153BXXABA CPG0721403BXXABA	Light **C**ommercial **P**ackage **G**as R410A gas/electric units, 208V-230 3 Phase, Belt Drive. Initial release of 3, 4, 6 ton models w/factory installed convenience outlet (non-powered).
CPG0360903BXXCBA CPG0902103BXXCBA	Light **C**ommercial **P**ackage **G**as R410A gas/electric units, 460V 3 phase, Belt Drive. Release of 3 & 7.5 ton w/factory installed low ambient kits.

These units have R410A refrigerant

PRODUCT IDENTIFICATION

CPG***XXX**XXX

Light Commercial Multiposition Package Gas	
Model #	**Description**
CPG0902103BXJXBA	Light **C**ommercial **P**ackage **G**as R410A gas/electric units, 208V-230V 3 Phase, Belt Drive. Release of 7.5 ton models with Ultra Gold condenser coils.
CPG0721403BASCBA	Light **C**ommercial **P**ackage **G**as R410A gas/electric units, 208V-230V 3 Phase, Belt Drive. Release of 6 ton with factory installed downflow economizer, stainless steel heat exchanger and low ambient kit.
CPG0601403BXSBBA	Light **C**ommercial **P**ackage **G**as R410A gas/electric units, 208V-230V 3 Phase, Belt Drive. Release of 5 ton models with factory installed stainless steel heat exchanger and powered convenience outlet.
CPG0360453BXXBBA CPG0601403BXXBBA CPG0721403BXXBBA CPG0902103BXXBBA	Light **C**ommercial **P**ackage **G**as R410A gas/electric units, 208V-230V 3 Phase, Belt Drive. Release of 3, 5, 6 and 7.5 ton models with factory installed powered convenience outlet.
CPG0721403BAAMBA	Light **C**ommercial **P**ackage **G**as R410A gas/electric units, 208V-230V 3-Phase,Belt Drive. Release of 6 ton models with factory installed condenser coil hail guard, downflow economizer and powered convenience outlet with low ambient kit.
CPG0480903BAABBA CPG0600903BAABBA CPG0902103BAABBA	Light **C**ommercial **P**ackage **G**as R410A gas/electric units, 208V-230V 3-Phase, Belt Drive. Initial release 4, 5 & 7.5 ton models with factory installed downflow economizer, hail guard and powered convenience outlet.
CPG0902103BAAXBB	Light **C**ommercial **P**ackage **G**as R410A gas/electric units, 208V-230V 3-Phase, Belt Drive. Initial release 7.5 ton models with factory installed downflow economizerand hail guard.
CPG0360453BASMBA CPG0360903BASMBA CPG0601403BASMBA CPG0902103BASMBB	Light **C**ommercial **P**ackage **G**as R410A gas/electric units, 208V-230V 3-Phase, Belt Drive. Initial release 3, 5 and 7.5 ton models with factory installed downflow economizer, stainless steel heat exchanger, powered convenience outlet and low ambient kit..
CPG0721403BAXABA	Light **C**ommercial **P**ackage **G**as R410A gas/electric units, 208V-230V 3-Phase, Belt Drive. Initial release 6 ton models with factory installed downflow economizer and non-powered convenience outlet.
CPG0360903BAACBA	Light **C**ommercial **P**ackage **G**as R410A gas/electric units, 208V-230V 3-Phase, Belt Drive. Initial release 3 ton models with factory installed downflow economizer, hail guard and low ambient kit.
CPG0360903BXXBBA CPG0360453BXXBBA CPG0480903BXXBBA CPG0600903BXXBBA	Light **C**ommercial **P**ackage **G**as R410A gas/electric units, 208V-230V 3-Phase, Belt Drive. Initial release 3, 4 and 5 ton models with factory installed powered convenience outlet.
CPG0721403BXXCBA	Light **C**ommercial **P**ackage **G**as R410A gas/electric units, 208V-230V 3-Phase, Belt Drive. Initial release 6 ton models with factory installed low ambient kit.
CPG0902103BJANBB	Light **C**ommercial **P**ackage **G**as R410A gas/electric units, 208V-230V 3-Phase, Belt Drive. Initial release 7.5 ton models with factory installed economizer, hail guard, powered convenience outlet, disconnect switch (non-fused) and return air smoke detector.
CPG036XXX3BHXZBA	Light **C**ommercial **P**ackage **G**as R410A gas/electric units, 208V-230V 3-Phase, Belt Drive. Initial release of 3 models with factory installed disconnect switch(non-fused), standard aluminized heat exchanger and return & supply air smoke detectors.
CPG0902104HXXXBB	Light **C**ommercial **P**ackage **G**as R410A gas/electric units, 460V 3 Phase High Static Belt Drive. Release of 7.5 ton models with factory installed high static kit.
CPG0481153BXXBBA	Light **C**ommercial **P**ackage **G**as R410A gas/electric units, 208/230V 3-Phase, Belt Drive with Powered Convenience Outlet.
CPG0481154HAAXBA	Light **C**ommercial **P**ackage **G**as R410A gas/electric units, 460V 3-Phase, High Static Belt Drive. Initial release of 4 ton models with factory installed hail guard, economizer and high static kit.
CPG0600904BABMBA	Light **C**ommercial **P**ackage **G**as R410A gas/electric units, 460V 3-Phase, Belt Drive. Initial release of 5 ton models with factory installed downflow economizer, Ultra Gold condensor coil with hail guard, powered convenience outlet and low ambient kit.
CPG0360904BHXUBA	Light **C**ommercial **P**ackage **G**as R410A gas/electric units, 460V 3-Phase, Belt Drive. 3 ton models with Disconnect switch (non fused), Non Powered Convience outlet, Low Ambient kit, Return air smoke detector.
CPG0360903BHXNBA CPG0480903BHXNBA	Light **C**ommercial **P**ackage **G**as R410A gas/electric units, 208V 3-Phase, Belt Drive. 3 and 4 ton models with Disconnect switch (non fused), Non-Powered Convience outlet, and Return air smoke detector.
CPG0480903BHXJBA CPG0601403BHXJCA	Light **C**ommercial **P**ackage **G**as R410A gas/electric units, 208V 3-Phase, Belt Drive. 4 and 5 ton models with Disconnect switch (non fused), Non-Powered Convience outlet, Return and Supply air smoke detector.
CPG0480904BXABBA CPG0600904BXABBA CPG0721404BXABBA CPG0902104BXABBA	Light **C**ommercial **P**ackage **G**as R410A gas/electric units, 460V 3 phase, Belt Drive. Release of 4, 5, 6 & 7.5 ton w/factory installed hail guards and powered convenience outlet.
CPG0480904BXXBBA	Light **C**ommercial **P**ackage **G**as R410A gas/electric units, 460V 3-Phase, Belt Drive. Initial release of 4 ton models with factory installed powered convenience outlet.
CPG0721404BAXCBA	Light **C**ommercial **P**ackage **G**as R410A gas/electric units, 460V 3 Phase, Belt Drive. Release of 6 ton with factory installed economizer, and low ambient kit.

These units have R410A refrigerant

PRODUCT IDENTIFICATION CPG***XXX**XXX

Light Commercial Multiposition Package Gas	
Model #	**Description**
CPG0481154BAAXBA CPG0601404BAAXBA	Light **C**ommercial **P**ackage **G**as R410A gas/electric units, 460V 3-Phase, Belt Drive. Initial release 4 & 5 ton models with factory installed hail guard, economizer and high static kit.
CPG0902104BHXZBA	Light **C**ommercial **P**ackage **G**as R410A gas/electric units, 460V 3 Phase, Belt Drive. Initial release 7.5 ton models with factory installed disconnect switch(non-fused), standard aluminized heat exchanger and return & supply air smoke detectors.
CPG0721404BABBBA	Light **C**ommercial **P**ackage **G**as R410A gas/electric units, 460V 3-Phase, Belt Drive. Initial release of 6 ton models with factory installed downflow economizer, Ultra Gold condensor coil with hail guard and powered convenience outlet.
CPG0600904BABMBA	Light **C**ommercial **P**ackage **G**as R410A gas/electric units, 460V 3-Phase, Belt Drive. Initial release of 5 ton models with factory installed downflow economizer, hail guard and powered convenience outlet with low ambient kit.
CPG0902104BJANBB	Light **C**ommercial **P**ackage **G**as R410A gas/electric units, 460V 3-Phase, Belt Drive. Initial release 7.5 ton models with factory installed economizer, hail guard, powered convenience outlet, disconnect switch (non-fused) and return air smoke detector.
CPG0902104BAXXBB	Light **C**ommercial **P**ackage **G**as R410A gas/electric units, 460V 3-Phase, Belt Drive. Initial release of 7.5 ton models with factory installed downflow economizer.
CPG0601407HAAXBA CPG0902107HAAXBB	Light **C**ommercial **P**ackage **G**as R410A gas/electric units, 575V 3 Phase High Static Belt Drive. Release of 5 & 7.5 ton models with factory installed hail guard, economizer and high static kit.
CPG0721407HXXXBA CPG0902107HXXXBA	Light **C**ommercial **P**ackage **G**as R410A gas/electric units, 575V 3 phase, high static. Initial release of 6 & 7.5 ton models with factory installed electric heat, powered convenience outlet and economizer.
CPG0360907HAXXBA CPG0481157HAXXBA CPG0601407HAXXBA CPG0721407HAXXBA CPG0902107HAXXBB	Light **C**ommercial **P**ackage **G**as R410A gas/electric units, 575V 3-Phase, High Static Belt Drive. Release of 3 - 7.5 ton models with high static kits and factory installed downflow economizer and standard aluminized heat exchanger.
CPG0721407HAJDBA	Light **C**ommercial **P**ackage **G**as R410A gas/electric units, 575V 3-Phase, High Static Belt Drive. Initial release 6 ton models with factory installed downflow economizer, Ultragold condenser coil and return air smoke detector.
CPG0360907BASFBA CPG0902107BASFBB	Light **C**ommercial **P**ackage **G**as R410A gas/electric units, 208V-230V 3-Phase, Belt Drive. Initial release 3 and 7.5 ton models with factory installed downflow economizer, stainless steel heat exchanger, non-powered convenience outlet and low ambient kit.
CPG0360903BJSBBA	Light **C**ommercial **P**ackage **G**as R410A gas/electric units, 208V-230V 3-Phase, Belt Drive. Release of 3 ton models with factory installed downflow economizer and disconnect switch (non-fused), stainless steel heat exchanger,and powered convenience outlet.
CPG0360453HHXGBA CPG0601403HHXGBA	Light **C**ommercial **P**ackage **G**as R410A gas/electric units, 208V-230V 3-Phase, High StaticBelt Drive. Release of 3 & 5 ton models with factory installed disconnect switch (non-fused), non-powered convenience outlet and return air smoke detector.
CPG0360903HJCYBA	Light **C**ommercial **P**ackage **G**as R410A gas/electric units, 208V-230V 3-Phase, High StaticBelt Drive. Release of 3 ton models with factory installed downflow economizer and disconnect switch (non-fused), stainless steel heat exchanger, hail guard, low ambient kit and return and supply air smoke detector.
CPG0480903DJANBA CPG0600903DJANBA	Light **C**ommercial **P**ackage **G**as R410A gas/electric units, 208V-230V 3-Phase, Direct Drive. Release of 4 & 5 ton models with factory installed downflow economizer and disconnect switch (non-fused), hail guard, powered convenience and return air smoke detector.
CPG0360903BHAXBA CPG0601403BHAXBA	Light **C**ommercial **P**ackage **G**as R410A gas/electric units, 208-230V 3 Phase, Belt Drive. Initial release 3 & 5 ton models with factory installed disconnect switch(non-fused) and hail guards.
CPG0481153DXXFBA	Light **C**ommercial **P**ackage **G**as R410A gas/electric units, 208V-230V 3-Phase, Direct Drive. Release of 4 ton models with factory installed non-powered convenience outlet and low ambient kit.
CPG0721403BXXNBA	Light **C**ommercial **P**ackage **G**as R410A gas/electric units, 208-230V 3 Phase, Belt Drive. Initial release 6 ton models with factory installed powered convenience outlet and return air smoke detector.
CPG0721403HXSXBA	Light **C**ommercial **P**ackage **G**as R410A gas/electric units, 208V-230V 3-Phase, High StaticBelt Drive. Release of 6 ton models with factory installed stainless steel heat exchanger.
CPG0902103BAAVBB	Light **C**ommercial **P**ackage **G**as R410A gas/electric units, 208-230V 3-Phase, Belt Drive. Initial release 7.5 ton models with factory installed downflow economizer, hail guard, low ambient kit and return air smoke detector.
CPG0360903BHXJBA	Light **C**ommercial **P**ackage **G**as R410A gas/electric units, 208V 3-Phase, Belt Drive. 3 ton models with Disconnect switch (non fused), Non-Powered Convience outlet, Return and Supply air smoke detectors.
CPG0480903DHXABA	Light **C**ommercial **P**ackage **G**as R410A gas/electric units, 208V-230 3 Phase, Direct Drive. Initial release of 4 ton models w/factory installed disconnect switch (non-fused) & non-powered convenience outlet.
CPG0360454BXXEBA CPG0480904BXXEBA	Light **C**ommercial **P**ackage **G**as R410A gas/electric units, 460V 3 Phase, Belt Drive. Initial release of 3 & 4 ton models w/factory installed supply air smoke detectors.

These units have R410A refrigerant

CPC/CPH/CPG ACCESSORIES	
14CURB3672B	3 - 6 Ton Roof Curb 14" Tall 'B' Chassis
14CURB90150	7.5 Ton Roof Curb 14" Tall A & B Chassis
DNECONGS3672B	3 - 6 Ton Downflow Economizer for CPC 'B' Chassis
DNECONGS90120	7.5 Ton Downflow Economizer for CPC/CPG A & B Chassis
DNECONGS3672B-NR	3 - 6 Ton Downflow Economizer for CPC 'B' Chassis W/O Barometric Relief
HZECONGS3672B	3 - 6 Ton Horizontal Economizer for CPC 'B' Chassis
DNECONHP90120	7.5 Ton Downflow Economizer for CPH A & B Chassis
DNECONHP3672B	3 - 6 Ton Downflow Economizer for CPH 'B' Chassis
DNECONHP3672DB	3 - 6 Ton Downflow Economizer for CPH Dry Bulb
HZECONHP3672B	3 -6 Ton Horizontal Economizer for CPH 'B' Chassis
HZECONHP90150	7.5 Ton Horizontal Economizer for CPH A & B Chassis
25FD3672	3 - 6 Ton 25% Manual Fresh Air Damper
25FD90150	7.5 Ton 25% Manual Fresh Air Damper A & B Chassis
25MFD3672	3 - 6 Ton 25% Motorized Fresh Air Damper
25MFD90150	7.5 Ton 25% Motorized Fresh Air Damper A & B Chassis
PE36722B	3 - 6 Ton Power Exhaust 208/230v CP* Unit 'B' Chassis
PE901502	7.5 Ton Power Exhaust 208/230v CPH Unit A & B Chassis
PE36724B	3 - 6 Ton Power Exhaust 460v CP* Unit 'B' Chassis
PE901504	7.5 Ton Power Exhaust 460v CPH Unit A & B Chassis
BRD3672	Barometric Relief Damper
CDK36	3 Ton Concentric Duct Kit
CDK4872	4 - 6 Ton Concentric Duct Kit
CDK90102	7.5 Ton Concentric Duct Kit A & B Chassis
DNSQRRND36B	3 Ton Downflow Square to Round Adapter 16" Round 'B' Chassis
DNSQRRND4872B	4 -6 Ton Downflow Square to Round Adapter 18" Round 'B' Chassis
DNSQRRND90	7.5 Ton Downflow Square to Round Adapter 20" Round A & B Chassis
HAILGD03	Hail Guard Kit 3 - 5 Tons
HAILGD04	Hail Guard Kit - 6 Tons
HAILGD02	Hail Guard Kit - 7.5 Ton A & B Chassis
SPKT01	Single Point Kit - Single Phase 3 -6 ton B Chassis only
SPKT02	Single Point Kit - Three Phase 3- 6 Ton Chassis only
LAKT01	Low Ambient Kit
LAKT-02	Low Ambient Kit - 7.5 Ton A & B Chassis
EHK*-	Heater Kits
HSKT036B	High Static Kits for 3 Ton Belt Drive
HSKT048B	High Static Kits for 4 Ton Belt Drive
HSKT060B	High Static Kits for 5 Ton Belt Drive
HSKT072B	High Static Kits for 6 Ton Belt Drive
HSKT090	High Static Kits for 7.5 Ton Belt Drive
IRKT-01	Isolation Realy Kit - CPH only
GFCI	Convenience Outlet 3 -6 Ton Chassis only
OT18-60A	Outdoor Thermostat - All models

** Complete listing of EHK kits listed on electrical data page in this manual

***NOTE: High static airflow requires installation of high static kit (HSKT*), or factory-built High Static model.

HEATER KITS	
Part Number	**Description**
EHK1-10	10 KW Electric Heat Kit, 240V Single Phase
EHK3-10	10 KW Electric Heat Kit, 240V Three Phase
EHK4-10	10 KW Electric Heat Kit, 480V Three Phase
EHK7-10	10 KW Electric Heat Kit, 575V Three Phase
EHK1-15	15 KW Electric Heat Kit, 240V Single Phase
EHK3-15	15 KW Electric Heat Kit, 240V Three Phase (FOR 3 & 5 TONS)
EHK3-16	15 KW Electric Heat Kit, 240V Three Phase (FOR 7.5 & 10 TONS)
EHK4-15	15 KW Electric Heat Kit, 480V Three Phase
EHK4-16	15 KW Electric Heat Kit, 480V Three Phase (FOR 7.5 & 10 TONS)
EHK7-15	15 KW Electric Heat Kit, 575V Three Phase
EHK7-16	15 KW Electric Heat Kit, 575V Three Phase
EHK1 -18	18 KW Electric Heat Kit, 240V Single Phase (FOR 4 TON ONLY)
EHK3 -18	18 KW Electric Heat Kit, 240V Three Phase (FOR 4 TON ONLY)
EHK4 -18	18 KW Electric Heat Kit, 480V Three Phase (FOR 4 TON ONLY)
EHK7 -18	18 KW Electric Heat Kit, 575V Three Phase (FOR 4 TON ONLY)
EHK1-20	20 KW Electric Heat Kit, 240V Single Phase
EHK3-20	20 KW Electric Heat Kit, 240V Three Phase
EHK4-20	20 KW Electric Heat Kit, 480V Three Phase
EHK7-20	20 KW Electric Heat Kit, 575V Three Phase
EHK3-25	25 KW Electric Heat Kit, 240V Three Phase
EHK4-25	25 KW Electric Heat Kit, 480V Three Phase
EHK7-25	25 KW Electric Heat Kit, 575V Three Phase
EHK3-30	30 KW Electric Heat Kit, 240V Three Phase
EHK3-45	43 KW Electric Heat Kit, 240V Three Phase
EHK4-30	30 KW Electric Heat Kit, 480V Three Phase
EHK4-45	43 KW Electric Heat Kit, 480V Three Phase
EHK7-30	30 KW Electric Heat Kit, 575V Three Phase
EHK7-45	43 KW Electric Heat Kit, 575V Three Phase

MINIMUM AIRFLOW FOR ELECTRIC HEAT

Unit	HEATER KIT MODEL NUMBER	MINIMUM CFM
3 ton	EHK*-10	1250
	EHK*-15	1250
4 ton	EHK*-10	1300
	EHK*-15	1400
	EHK*-18	1400
5 ton	EHK*-10	1700
	EHK*-15	1700
	EHK*-20	1800
6 ton	EHK*-10	2100
	EHK*-15	2100
	EHK*-20	2100
	EHK*-25	2100
7.5 ton	EHK*-16	3000
	EHK*-30	3000
	EHK*-45	3000

⚠ ATTENTION INSTALLING PERSONNEL

Use only the heater kit specified for each model as dictated by the table above.

LIGHTING INSTRUCTIONS CPG***XXX**XXX

FOR YOUR SAFETY READ BEFORE OPERATING

WARNING If you do not follow these instructions exactly, a fire or explosion may result causing property damage, personal injury or loss of life.

A. This appliance does not have a pilot. It is equipped with an ignition device which automatically lights the burners. Do not try to light the burners by hand.

B. BEFORE OPERATING smell around the appliance area for gas. Be sure to smell next to the floor because some gas is heavier than air and will settle on the floor.

WHAT TO DO IF YOU SMELL GAS

- Do not try to light any appliance.
- Do not touch any electric switch; do not use any telephone in your building.
- Immediately call your supplier from a neighbor's phone. Follow the gas suppliers instructions.
- If you cannot reach your gas supplier, call the fire department.

C. Use only your hand to move the gas control switch or knob. Never use tools. If the gas control switch or knob will not operate, don't try to repair it, call a qualified service technician. Force or attempted repair may result in a fire or explosion.

D. Do not use this appliance if any part has been under water. Immediately call a qualified service technician to inspect the appliance and to replace any part of the control system and any gas control which has been under water.

WARNING: Improper installation, adjustment, alteration, service or maintenance can cause injury or property damage. Refer to the user's information manual provided with this furnace. For assistance or additional information consult a qualified installer, service agency or the gas supplier.

This furnace must be installed in accordance with the manufacturers instructions and local codes. In the absence of local codes, follow the National Fuel Gas Code, ANSI Z223.1.

OPERATING INSTRUCTIONS

1. STOP! Read the safety information above on this label.
2. Set the thermostat to lowest setting.
3. Turn off all electric power to the appliance.
4. This appliance is equipped with an automatic ignition system which automatically lights the burners. Do not try to light the burners by hand.
5. Remove control access panel.
6. Move the gas control switch or knob to "OFF".

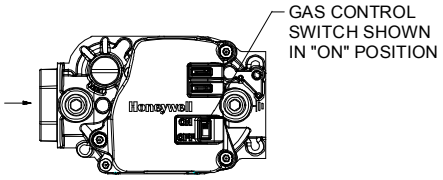

7. Wait five (5) minutes to clear out any gas. If you then smell gas, STOP! Follow "B" in the safety information above on this label. If you don't smell gas, go to the next step.
8. Move the gas control switch or knob to "ON".
9. Replace control access panel.
10. Turn on all electric power to the appliance.
11. Set the thermostat to the desired setting.
12. If the appliance will not operate, follow the instructions "To Turn Off Gas To Appliance" and call your service technician or gas supplier.

WARNING: If not installed, operated and maintained in accordance with the manufacturer's instructions, this product could expose you to substances in fuel combustion which can cause death or serious illness and which are known to the State of California to cause cancer, birth defects or other reproductive harm. This product contains fiberglass insulation. Fiberglass insulation contains a chemical known by the State of California to cause cancer.

TO TURN OFF GAS TO APPLIANCE

1. Set the thermostat to its lowest setting.
2. Turn off all electric power to the appliance if service is to be performed.
3. Remove control access panel.
4. Move the gas control switch or knob to "OFF". Do not force.
5. Replace control access panel.

FOR YOUR SAFETY Do not store or use gasoline or other flammable vapors and liquids in the vicinity of this or any other appliance.

0140F00688 Rev A

LIGHTING INSTRUCTIONS

CPG***XXX**XXX

FOR YOUR SAFETY READ BEFORE OPERATING

WARNING If you do not follow these instructions exactly, a fire or explosion may result causing property damage, personal injury or loss of life.

A. This appliance does not have a pilot. It is equipped with an ignition device which automatically lights the burners. Do not try to light the burners by hand.

B. BEFORE OPERATING smell around the appliance area for gas. Be sure to smell next to the floor because some gas is heavier than air and will settle on the floor.

WHAT TO DO IF YOU SMELL GAS

- Do not try to light any appliance.
- Do not touch any electric switch; do not use any telephone in your building.
- Immediately call your supplier from a neighbor's phone. Follow the gas suppliers instructions.
- If you cannot reach your gas supplier, call the fire department.

C. Use only your hand to move the gas control switch or knob. Never use tools. If the gas control switch or knob will not operate, don't try to repair it, call a qualified service technician. Force or attempted repair may result in a fire or explosion.

D. Do not use this appliance if any part has been under water. Immediately call a qualified service technician to inspect the appliance and to replace any part of the control system and any gas control which has been under water.

WARNING: Improper installation, adjustment, alteration, service or maintenance can cause injury or property damage. Refer to the user's information manual provided with this furnace. For assistance or additional information consult a qualified installer, service agency or the gas supplier.

This furnace must be installed in accordance with the manufacturers instructions and local codes. In the absence of local codes, follow the National Fuel Gas Code, ANSI Z223.1.

OPERATING INSTRUCTIONS

1. STOP! Read the safety information above on this label.
2. Set the thermostat to lowest setting.
3. Turn off all electric power to the appliance.
4. This appliance is equipped with an automatic ignition system which automatically lights the burners. Do not try to light the burners by hand.
5. Remove control access panel.
6. Move the gas control switch or knob to "OFF".

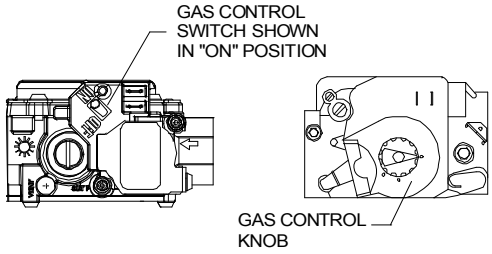

7. Wait five (5) minutes to clear out any gas. If you then smell gas, STOP! Follow "B" in the safety information above on this label. If you don't smell gas, go to the next step.
8. Move the gas control switch or knob to "ON".
9. Replace control access panel.
10. Turn on all electric power to the appliance.
11. Set the thermostat to the desired setting.
12. If the appliance will not operate, follow the instructions "To Turn Off Gas To Appliance" and call your service technician or gas supplier.

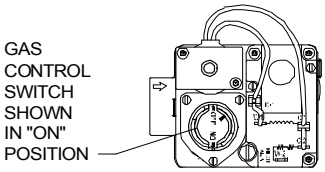

For outdoor installation only.

WARNING: If not installed, operated and maintained in accordance with the manufacturer's instructions, this product could expose you to substances in fuel combustion which can cause death or serious illness and which are known to the State of California to cause cancer, birth defects or other reproductive harm. This product contains fiberglass insulation. Fiberglass insulation contains a chemical known by the State of California to cause cancer.

TO TURN OFF GAS TO APPLIANCE

1. Set the thermostat to its lowest setting.
2. Turn off all electric power to the appliance if service is to be performed.
3. Remove control access panel.
4. Move the gas control switch or knob to "OFF". Do not force.
5. Replace control access panel.

FOR YOUR SAFETY Do not store or use gasoline or other flammable vapors and liquids in the vicinity of this or any other appliance.

B14933-239

ACCESSORIES

ROOF CURBS 14CURB3672B

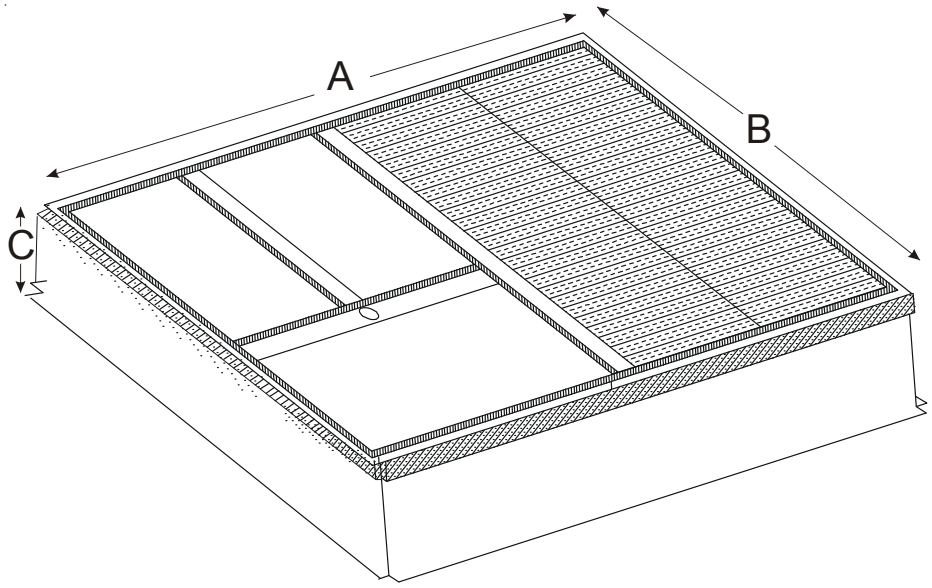

14CURB3672B				
Chassis	**Models**	**A**	**B**	**C**
#1	3 - 6 Tons	70 3/4"	37"	14"

14CURB90150				
Chassis	**Models**	**A**	**B**	**C**
#2	7.5 Tons	92-1/4"	53-1/4"	14"

Measurement in inches.

DOWNFLOW SQUARE TO ROUND ADAPTERS DNSQRRN36B, DNSQRND4872B

DNSQRRND36B Shown

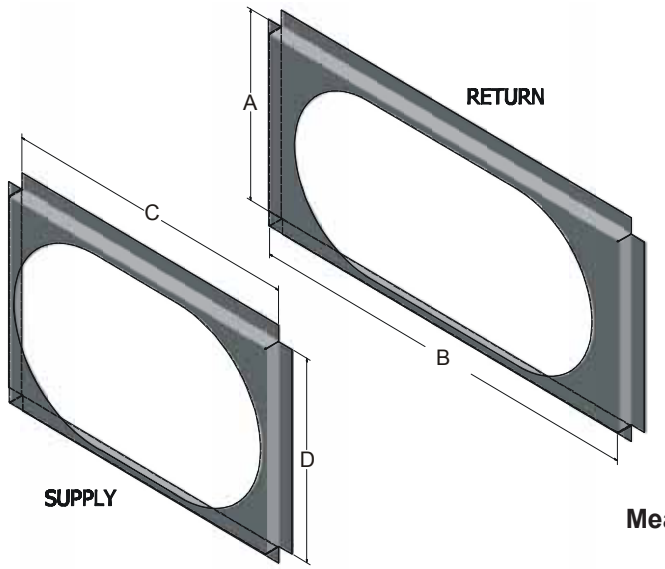

Measurement in inches.

DOWNFLOW SQUARE TO ROUND ADAPTER					
MODEL	**SIZE**	**A**	**B**	**C**	**D**
DNSQRRND36B	16" ROUND	13.50	31.125	19.50	13.50
DNSQRRND4872B	18" ROUND	13.50	31.125	19.50	19.00
DNSQRRND90	20" ROUND	14.375	30.125	15.125	29.875

ACCESSORIES

MOTORIZED/MANUAL FRESH AIR DAMPERS

25% FRESH AIR DAMPER			
CHASSIS	MODELS	MANUAL	MOTORIZED
#1	3 - 6 Tons	25FD3672	25MFD3672
#2	7.5 Tons	25FD90150	25MFD90150

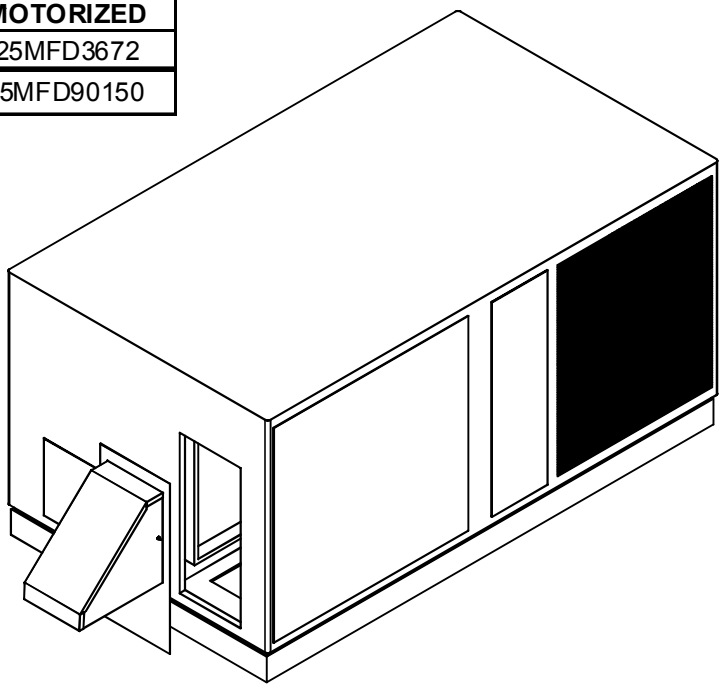

ECONOMIZERS

HORIZONTAL ECONOMIZER		
MODEL	TYPE	MODEL
HZECONGS3672B	HORIZONTAL	3-6 TON CPC/CPG
HZECONHP3672B	HORIZONTAL	3-6 TON CPH
HZECONGS90150	HORIZONTAL	7.5 TON CPC/CPG
HZECONHP90150	HORIZONTAL	7.5 TON CPH

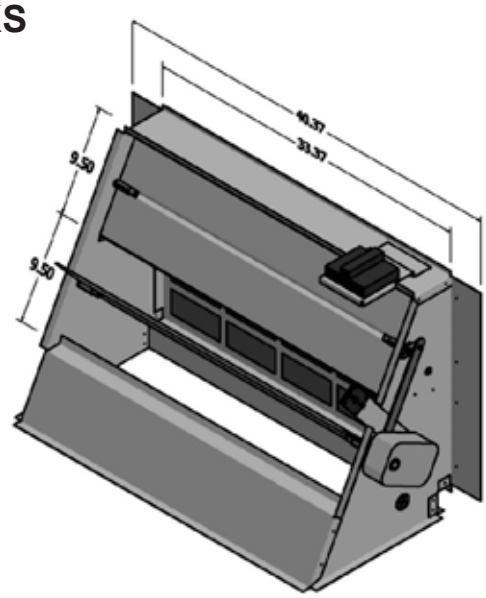

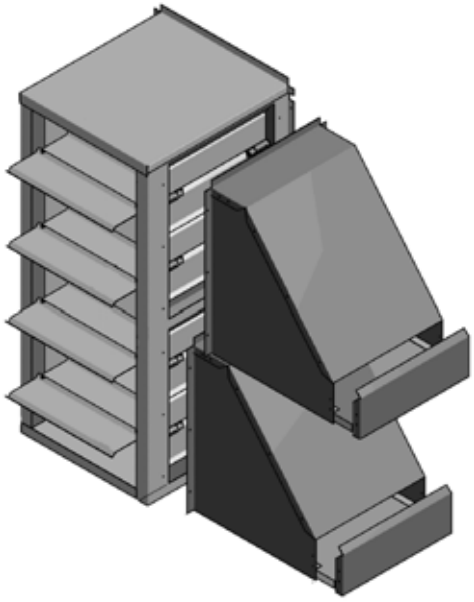

DOWNFLOW ECONOMIZER		
MODEL	TYPE	MODEL
DNECONGS3672B	DOWNFLOW	3-6 TON CPC/CPG
DNECONGS3672B-NR	DOWNFLOW W/O BAROMETRIC RELIEF	3-6 TON CPC/CPG
DNECONHP3672B	DOWNFLOW	3-6 TON CPH
DNECONHP3672DB	DOWNFLOW FOR DRY BULB	3-6 TON CPH
DNECONGS90120	DOWNFLOW	7.5 TON CPC/CPG
DNECONHP90120	DOWNFLOW	7.5 TON CPH

ACCESSORIES

HAIL GUARD KIT

HAIL GUARD KIT	
MODELS	**KIT #**
3 - 5 Tons	HAILGD03
6 Tons	HAILGD04
7.5 Tons	HAILGD02

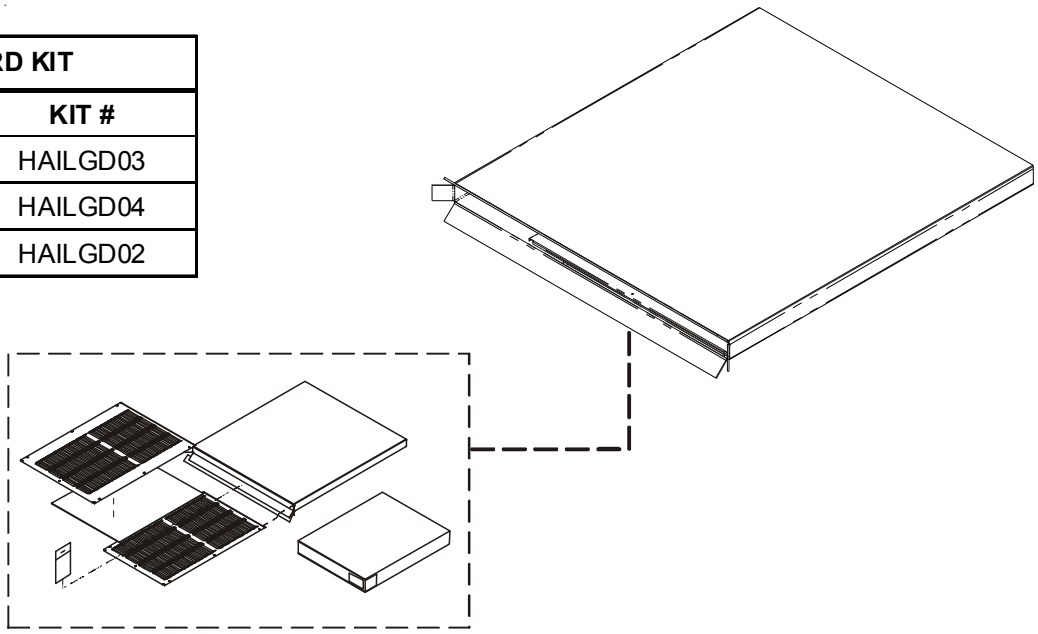

PRODUCT DESIGN

In installations where the unit is installed above ground level and not serviceable from the ground (Example: Roof Top installations) the installer must provide a service platform for the service person with rails or guards in accordance with local codes or ordinances or in their absence with the latest edition of the National Fuel Gas Code ANSI Z223.1.

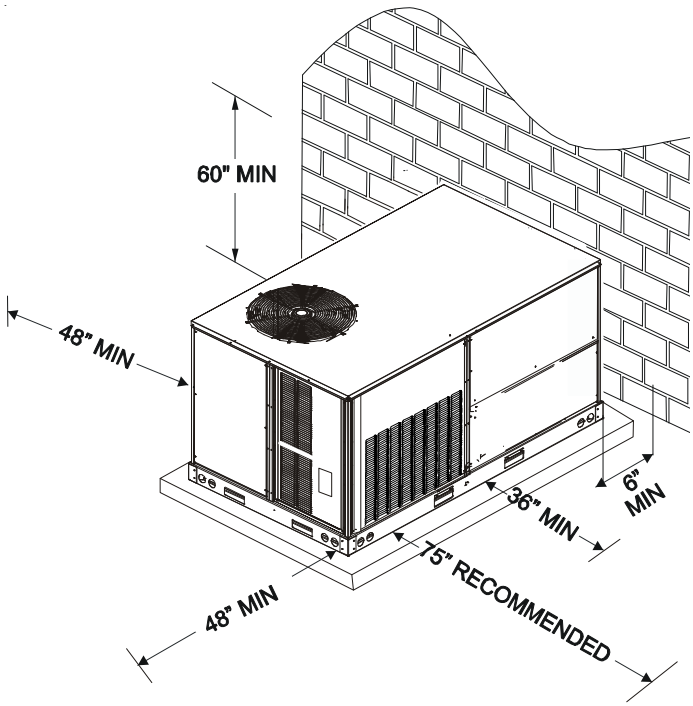

NOTE: A clearance of 48" is recommended on all sides of the unit and 75" total clearance is recommended on the main control panel side to facilitate possible fan shaft, coil, electric heat and gas furnace removal. See figure above.

Roof overhang should be no more than 36" and provisions made to deflect the warm discharge air out from the overhang. Minimum clearances are required to avoid air recirculation and keep the unit operating at peak efficiency.

WARNING

To prevent property damage, the unit should remain in an upright position during all rigging and moving operations. To facilitate lifting and moving when a crane is used, please the unit in an adequate cable sling.

IMPORTANT: If using bottom discharge with roof curb, ductwork should be attached to the curb prior to installing the unit.

Refer to Roof Curb Installation Instructions for proper curb installation. Curbing must be installed in compliance with the National Roofing Contractors Association Manual.

NOTE: The roof curb must be level front to back and side to side.

Corner & Center of Gravity Locations

NOTES:

1. Weights are for belt drive gas, cooling or heat pump units; no options.
2. Centers of gravity are for belt drive gas, cooling or heat pump units without options.

Provisions for forks have been included in the unit base frame on three sides. If unit is moved by forklift, no other fork locations are approved.

CAUTION

If units are lifted two at a time, the fork holes on the condenser end of the unit must NOT be used. Minimum fork length is 42" to prevent damage to the unit; however, 48" is recommended.

3 - 6 TON GAS UNITS

CPG***XXX**XXX - CORNER WEIGHTS						
Model	**A**	**B**	**C**	**D**	**X**	**Y**
CPG036045*	100	165	100	165	37	30
CPG036090*	100	170	100	170	37	30
CPG048090*	110	180	110	180	37	30
CPG048115*	110	180	110	180	37	30
CPG060090*	115	190	120	195	37	30
CPG060140*	120	195	120	195	37	30
CPG072140*	130	215	130	215	37	30

Weights are shown in pounds (Columns A-D).

Columns X & Y are shown in inches.

3 - 6 TON COOLING UNITS

CPC***XXX**XXX - CORNER WEIGHTS						
Model	**A**	**B**	**C**	**D**	**X**	**Y**
CPC036*	115	150	105	130	35	27
CPC048*	125	160	110	140	35	27
CPC060*	135	170	120	155	35	27
CPC072*	150	190	130	170	35	27

Weights are shown in pounds (Columns A-D).

Columns X & Y are shown in inches.

PRODUCT DESIGN

3 - 6 TON HEAT PUMP UNITS

CPH***XXX**XXX - CORNER WEIGHTS						
Model	**A**	**B**	**C**	**D**	**X**	**Y**
CPH036*	130	180	110	155	34	28
CPH048*	135	185	115	155	34	28
CPH060*	135	185	115	160	34	28
CPH072*	145	205	125	175	34	28

Weights are shown in pounds (Columns A-D).

Columns X & Y are shown in inches.

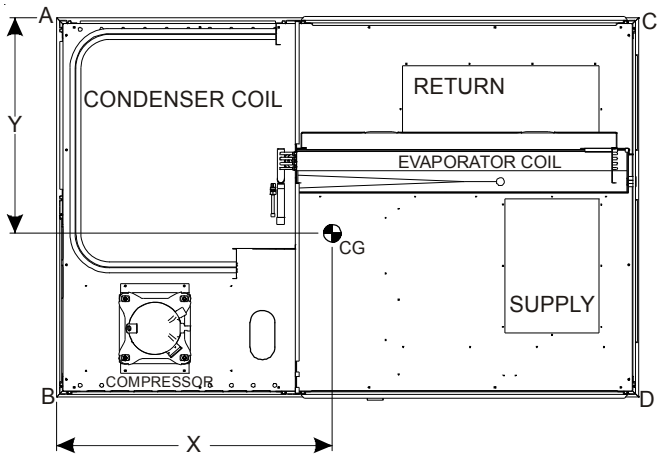

CENTER OF GRAVITY - 3 - 6 TONS

7.5 TON GAS UNITS

CPG***XXX**XXX - CORNER WEIGHTS						
Model	**A**	**B**	**C**	**D**	**X**	**Y**
CPG0902103*	225	325	275	400	48	30

Weights are shown in pounds (Columns A-D).

Columns X & Y are shown in inches.

7.5 TON COOLING UNITS

CPC***XXX**XXX - CORNER WEIGHTS						
Model	**A**	**B**	**C**	**D**	**X**	**Y**
CPC090*	280	280	280	280	48	30

Weights are shown in pounds (Columns A-D).

Columns X & Y are shown in inches.

7.5 TON HEAT PUMP UNITS

CPH***XXX**XXX - CORNER WEIGHTS						
Model	**A**	**B**	**C**	**D**	**X**	**Y**
CPH090*	285	285	285	285	48	30

Weights are shown in pounds (Columns A-D).

Columns X & Y are shown in inches.

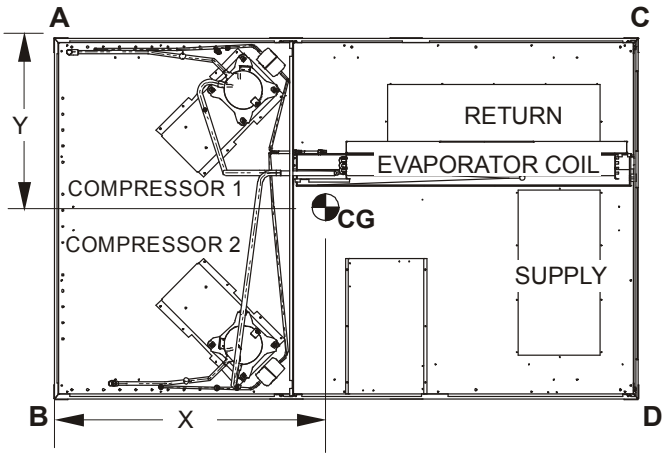

CENTER OF GRAVITY - 7.5 TONS

Rigging Information

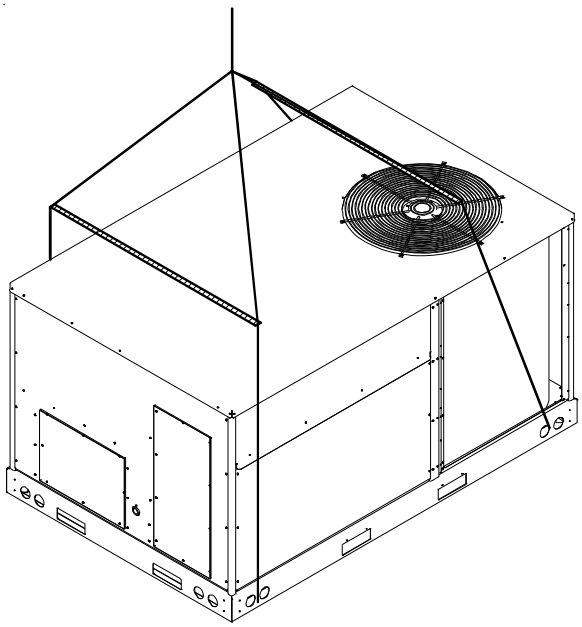

PRODUCT DESIGN

1. Unit must be lifted by the four lifting holes located at the base frame corners.
2. Lifting cables should be attached to the unit with shackles as shown in preceeding figure.
3. The distance between the crane hook and the top of the unit must not be less than 60”.
4. Two spreader bars must span over the unit to prevent damage to the cabinet by the lift cables. Spreader bars must be of sufficient length so that cables do not come in contact with the unit during transport. Remove wood struts mounted beneath unit base frame before setting unit on roof curb. These struts are intended to protect unit base frame from forklift damage. Removal is accomplished by extracting the sheet metal retainers and pulling the struts through the base of the unit. Refer to rigging label on the unit.

CAUTION

To prevent severe damage to the bottom of the unit, do not forklift unit after wood struts have been removed.

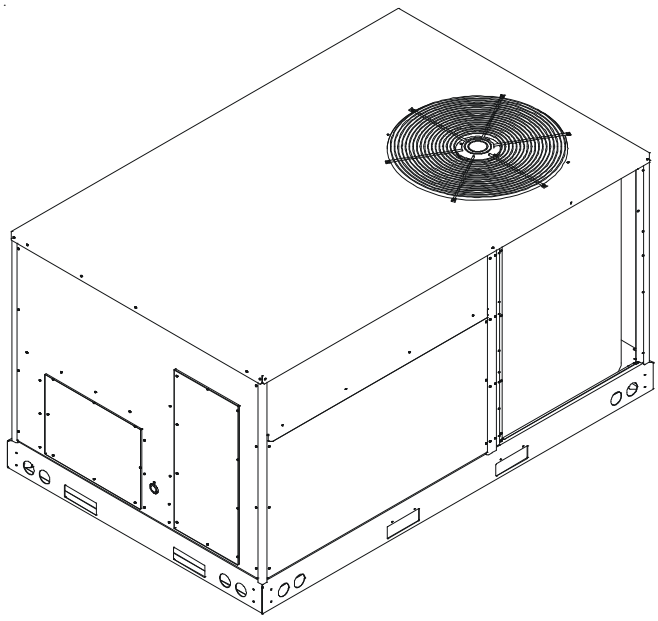

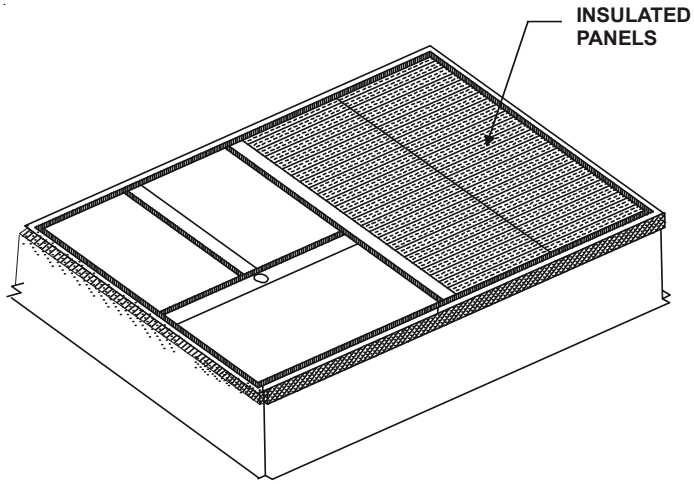

Roof Curb Installation

NOTE: A roof curb can be used to utilize bottom discharge. CPG Light Commercial Package Units are designed for outdoor installations only, primarily in light commercial applications.

The connecting ductwork (Supply and Return) can be connected for either horizontal or down discharge airflow. In the down discharge applications a matching Roof Curb is recommended .

The minimum filter area should not be less than those sizes listed in the Technical Manual. Under no circumstances should the unit be operated without return air filters.

PRODUCT DESIGN

CPC/CPH***XXX**XXXB*

CPC/CPH Light Commercial Package Units are designed for outdoor installations only, primarily in light commercial applications.

The connecting ductwork (Supply and Return) can be connected for horizontal discharge airflow. In vertical applications, a matching Roof Curb is recommended.

Conditioned air is drawn through the filters, across the coil and back into the conditioned space by the indoor blower. The minimum filter area should not be less than those sizes listed in the Specification Section. Under no circumstances should the unit be operated without return air filters.

A 3/4" pipe is provided for removal of condensate water from the indoor coil. (Do not reduce the drain line size).

Refrigerant flow control is achieved by use of restrictor orifices. CPC/CPH models use the FasTest Access Fitting System, with a saddle that is either soldered to the suction and liquid lines or is fastened with a locking nut to the access fitting box (core) and then screwed into the saddle. **NOTE: Do not remove the core from the saddle until the refrigerant charge has been removed. Failure to do so could result in property damage or personal injury.**

CPC/CPH***XXX3**D** indoor blower motors are PSC type motors with the exception of CPH060XXX3**D** units which have EEM indoor blower motors that are energized by a 24V signal from the thermostat and are constant torque motors with very low power consumption. The EEM motor features an integral control module.

CPC/CPH***XXX***B** units have 3 phase belt drive indoor blower motors that are energized through the blower motor contactor.

Air for condensing (cooling) is drawn through the outdoor coil by a propeller fan, and is discharged vertically out the top of the unit. The outdoor coil is designed for .0 static. No additional restriction (ductwork) shall be applied.

Conditioned air is drawn through the filter(s), field installed, across the evaporator coil and back into the conditioned space by the indoor blower.

COMPRESSORS

All CPC/CPH series package units use the Compliant Scroll compressor, instead of traditional reciprocating compressors. Still other models use reciprocating compressors.

A scroll is an involute spiral which, when matched with a mating scroll form as shown, generates a series of crescent shaped gas pockets between the two members.

During compression, one scroll remains stationary (fixed scroll) while the other form (orbiting scroll) is allowed to orbit (but not rotate) around the first form.

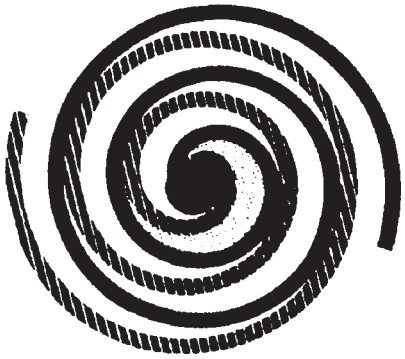

As this motion occurs, the pockets between the two forms are slowly pushed to the center of the two scrolls while simultaneously being reduced in volume. When the pocket reaches the center of the scroll form, the gas, which is now at a high pressure, is discharged out of a port located at the center.

During compression, several pockets are being compressed simultaneously, resulting in a very smooth process. Both the suction process (outer portion of the scroll members) and the discharge process (inner portion) are continuous.

Some design characteristics of the Compliant Scroll compressor are:

- Compliant Scroll compressors are more tolerant of liquid refrigerant.

  NOTE: Even though the compressor section of a Scroll compressor is more tolerant of liquid refrigerant, continued floodback or flooded start conditions may wash oil from the bearing surfaces causing premature bearing failure.

COOLING

The refrigerant used in the system is R-410A. It is a clear, colorless, non-toxic and non-irritating liquid. R-410A is a 50:50 blend of R-32 and R-125. The boiling point at atmospheric pressure is **-62.9°F.**

A few of the important principles that make the refrigeration cycle possible are: heat always flows from a warmer to a cooler body. Under lower pressure, a refrigerant will absorb heat and vaporize at a low temperature. The vapors may be drawn off and condensed at a higher pressure and temperature to be used again.

The indoor evaporator coil functions to cool and dehumidify the air conditioned spaces through the evaporative process taking place within the coil tubes.

Heat is continually being transferred to the cool fins and tubes of the indoor evaporator coil by the warm system air. This warming process causes the refrigerant to boil. The heat removed from the air is carried off by the vapor.

As the vapor passes through the last tubes of the coil, it becomes superheated. That is, it absorbs more heat than is necessary to vaporize it. This is assurance that only dry gas will reach the compressor. Liquid reaching the compressor can weaken or break compressor valves.

The compressor increases the pressure of the gas, thus adding more heat, and discharges hot, high pressure superheated gas into the outdoor condenser coil.

In the condenser coil, the hot refrigerant gas, being warmer than the outdoor air, first loses its superheat by heat transferred from the gas through the tubes and fins of the coil. The refrigerant now becomes saturated, part liquid, part vapor and then continues to give up heat until it condenses to a liquid alone. Once the vapor is fully liquefied, it continues to give up heat which subcools the liquid, and it is ready to repeat the cycle.

COOLING CYCLE

Cooling Only Models

When the contacts of the room thermostat close, making terminals R to Y and R to G, the low voltage circuit to the contactor is completed starting the compressor and outdoor fan motor. This also energizes the indoor blower through the normally open contacts of the EBTDR on PSC equipped models units and through the thermostat Y terminal to the EEM motor on EEM equipped model units.

When the thermostat is satisfied, breaking the circuit between R to Y and R to G, the compressor and outdoor fan motor will stop. The indoor blower will stop after the fan off delay.

If the room thermostat fan selector switch should be set to the "on" position then the indoor blower would run continuous rather than cycling with the compressor.

Heat Pump Models

Any time the room thermostat is switched to cool, the O terminal is energized. This energizes the 24 volt coil on the reversing valve and switches it to the cooling position.

When the contacts of the room thermostat close, this closes the circuit from R to Y and R to G in the unit.

This energizes the compressor contactor and will energize the indoor blower following the EBTDR 7 second fan on delay on PSC equipped model units, and instantly on models equipped with the EEM motor.

When the thermostat is satisfied, it opens its contacts breaking the low voltage circuit causing the compressor contactor to open and indoor fan to stop after the EBTDR 65 second delay on PSC equipped model units, and after the programmed 60 second off delay on units with the EEM motor.

If the room thermostat fan selector switch should be set to the "on" position then the indoor blower would run continuous rather than cycling with the compressor.

HEATING CYCLE

Cooling Only Units

NOTE: The following only applies if the cooling only unit has an approved electric heat kit installed for heating. If auxiliary electric heaters should be used, they may be controlled by outdoor thermostats (OT18-60A or OT/EHR18-60A).

CPC/CPH PSC Equipped Model Units

With the thermostat set to the heat position and a call for heat, R to W will be energized. This will energize the electric heat sequencers. When the normally open contacts of the heat sequencers close, this will energize the electric resistance heat and also the 240 volt coil on the isolation relay in the control panel. The normally open contacts of the isolation relay will close energizing the indoor blower motor through the normally closed contacts of the EBTDR.

CPC/CPH EEM Equipped Model Units

With the thermostat set to the heat position and a call for heat, R to W will be energized. This will energize the electric heat sequencers and the EEM indoor blower motor. When the normally open contacts of the heat sequencers close, this will energize the electric resistance heat.

3 - 5 TON UNITS - ELECTRICAL ENTRANCE LOCATIONS

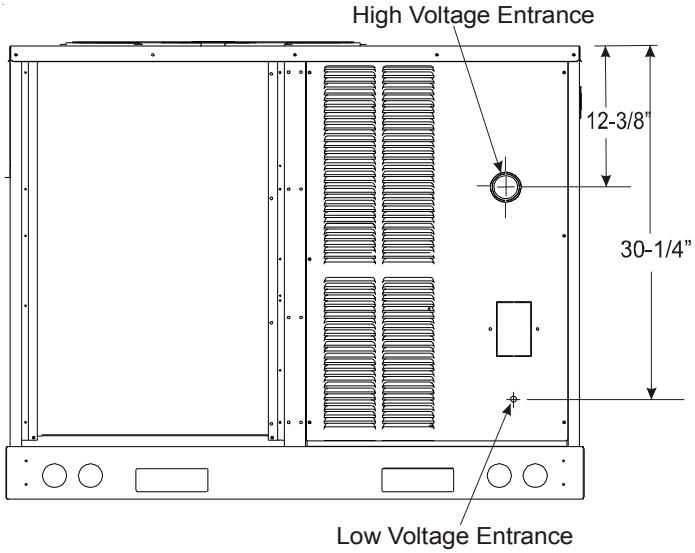

7.5 TON UNITS - ELECTRICAL ENTRANCE LOCATIONS

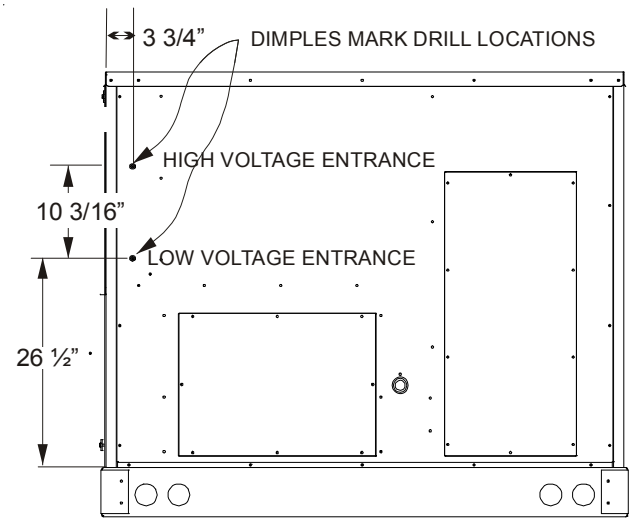

6 TON UNITS - ELECTRICAL ENTRANCE LOCATIONS

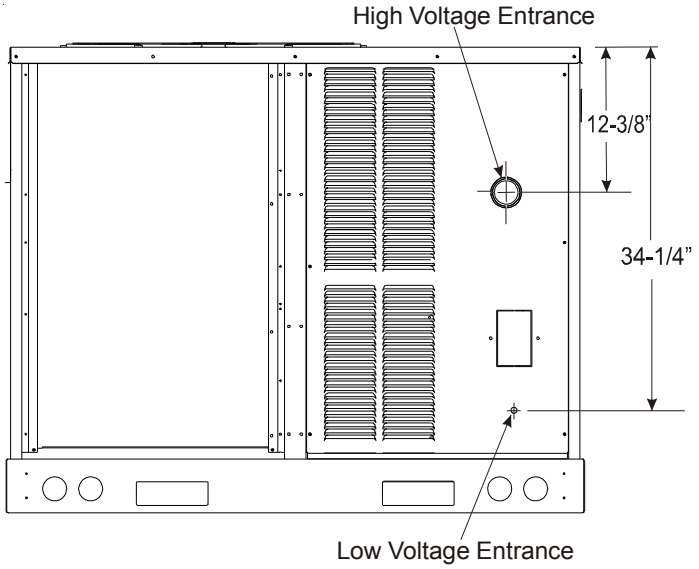

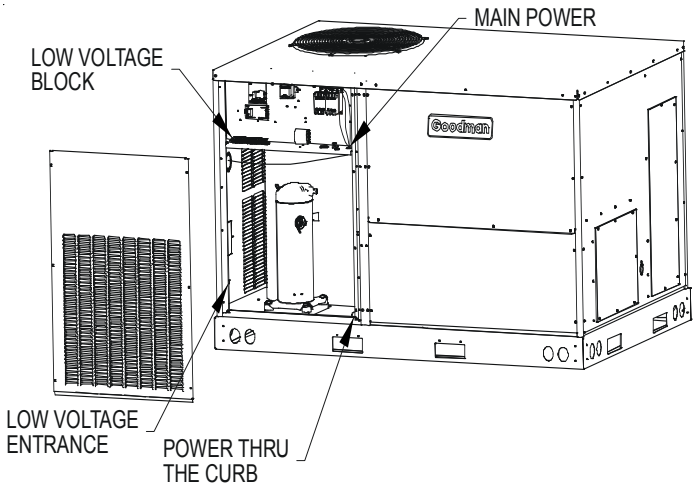

POWER AND LOW VOLTAGE BLOCK LOCATIONS

208 - 230v Models Only

The unit transformer is connected for 230V operation. If the unit is to operate on 208V, reconnect the transformer primary lead as shown on the unit wiring diagram.

Light Commercial Package Gas Units are designed for outdoor installations only, primarily in light commercial applications and are available in multiple sizes. They are designed for 208/230 volt single phase applications, 208/230 volt 3-phase, 460 volt 3-phase and 575 volt 3 phase applications.

The connecting ductwork (Supply and Return) can be connected for either horizontal or vertical airflow. In the vertical application, a matching Roof Curb is recommended.

A 3/4" - 14 NPT drain connector is provided for removal of condensate water from the indoor coil. In order to provide proper condensate flow, do not reduce the drain line size.

Refrigerant flow control is achieved by use of flowrator.

CPG units use the FasTest Access Fitting System which consists of a saddle that is either soldered to the suction and liquid lines or is fastened with a locking nut to the access fitting box (core) and then screwed into the saddle. **NOTE: The core must not be removed from the saddle until the refrigerant charge has been removed. Failure to do so could result in property damage or personal injury.**

Filters are factory suplied in the return air compartment upstream from the indoor coil. The minimum filter area should not be less than those sizes listed in the Specification Section. Under no circumstances should the unit be operated without return air filters.

CPG***XXX***B** units have 3 phase belt drive indoor blower motors that are energized through the blower motor contactor.

CPG***XXX***D** indoor blower motors are PSC type motors with the exception of CPG060XXX3**D** units which have EEM indoor blower motors that are energized by a 24V signal from the thermostat and are constant torque motors with very low power consumption. The EEM motor features an integral control module.

Air for condensing (cooling cycle) is drawn through the outdoor coil by a propeller fan(s), and is discharged vertically out the top of the unit. The outdoor coil is designed for .0 static. No additional restriction (ductwork) shall be applied.

Conditioned air is drawn through the filters, across the coil and back into the conditioned space by the indoor blower.

CPG package units use the Compliant Scroll compressor; there are a number of design characteristics which are different from the traditional reciprocating compressor.

- Due to their design Scroll compressors are inherently more tolerant of liquid refrigerant. **NOTE**: Even though the compressor section of a Scroll compressor is more tolerant of liquid refrigerant, continued flood back or flooded start conditions may wash oil from the bearing surfaces causing premature bearing failure.
- These Scroll compressors use "POE" or polyolester oil which is NOT compatible with mineral oilbased lubricants like 3GS. "POE" oil must be used if additional oil is required.
- Compliant scroll compressors perform “quiet” shutdowns that allow the compressor to restart immediately without the need for a time delay. This compressor will restart even if the system has not equalized.
- Operating pressures and amp draws may differ from standard reciprocating compressors. This information may be found in the “Cooling Performance Data” section.

ELECTRICAL WIRING

The units are designed for operation on 60 hertz current and at voltages as shown on the rating plate. All internal wiring is complete. Ensure the power supply to the compressor contactor is brought to the unit as shown on the supplied unit wiring diagram. The 24V wiring must be connected between the unit control panel and the room thermostat.

LINE VOLTAGE WIRING

Power supply to the unit must be N.E.C. Class 1, and must comply with all applicable codes. The unit must be electrically grounded in accordance with the local codes or, in their absence, with the latest edition of the National Electrical Code, ANSI/NFPA No. 70, or in Canada, Canadian Electrical Code, C22.1, Part 1. A fused disconnect must be provided and sized in accordance with the unit minimum circuit ampacity.

The best protection for the wiring is the smallest fuse or breaker which will hold the equipment on line during normal operation without nuisance trips. Such a device will provide maximum circuit protection.

WARNING

Do not exceed the maximum overcurrent device size shown on the unit data plate.

All line voltage connections must be made through weather proof fittings. All exterior power supply and ground wiring must be in approved weather proof conduit. Low voltage wiring from the unit control panel to the thermostat requires coded cable. See the following figures for ground level and rooftop wiring.

WARNING

To avoid the risk of property damage, personal injury or fire, use only copper conductors.

If it is necessary for the installer to supply additional line voltage wiring to the inside of the package unit, the wiring must comply with all local codes. This wiring must have a minimum temperature rating of 105°C. and must be routed away from the burner compartment. All line voltage splices must be made inside the unit control box.

GAS SUPPLY AND PIPING

WARNING

To prevent personal injury or death due to improper installation, adjustment, alteration, service or maintenance, refer to this manual. For additional assistance or information, consult a qualified installer, service agency or the gas supplier.

IMPORTANT NOTE: This unit is factory set to operate on natural gas at the altitudes shown on the rating plate.

WARNING

To avoid property damage, personal injury or death when either using propane gas alone or at higher altitudes, obtain and install the proper conversion kit(s). Failure to do so can result in unsatisfactory operation and/or equipment damage. High altitude kits are for U.S. Installation only and are not approved for use in Canada.

The rating plate is stamped with the model number, type of gas and gas input rating. Make sure the unit is equipped to operate on the type of gas available. Conversion to propane (LP) gas is permitted with the use of the factory authorized conversion kit (see the unit Technical Manual for the appropriate kit). For installations above 2,000 feet, use kit HA02. The HA02 kit is used for both Natural and LP gas at high altitudes. For High Altitude derates, refer to the latest edition of the National Fuel Gas Code NFPA 54/ANSI Z223.1.

Inlet Gas Pressure	
Natural	Min. 5.0" W.C., Max. 10.0" W.C.
Propane	Min. 11.0" W.C., Max 14.0" W. C.

Inlet Gas Pressure Must Not Exceed the Maximum Value Shown in the Inlet Gas Pressure Table.

The minimum supply pressure should not vary from that shown in the Inlet Gas Pressure Table because this could prevent the unit from having dependable ignition. In addition, gas input to the burners must not exceed the rated input shown on the rating plate. Overfiring of the unit could result in premature heat exchanger failure.

GAS PIPING

CAUTION

To avoid possible unsatisfactory operation or equipment damage due to underfiring or equipment, do not undersize the natural gas/propane piping from the meter/tank to the furnace. When sizing a trunk line per the tables, include all appliances on that line that could be operated simultaneously.

The gas pipe supplying the unit must be properly sized based on the cubic feet per hour of gas flow required, specific gravity of the gas and length of the run. The gas line installation must comply with local codes, or in the absence of local codes, with the latest edition of the National Fuel Gas Code ANSI Z223.1.

NATURAL GAS CONNECTION

NATURAL GAS CAPACITY OF PIPE IN CUBIC FEET OF GAS PER HOUR (CFH)

LENGTH OF PIPE IN FEET	NOMINAL BLACK PIPE SIZE				
	1/2"	3/4"	1"	1 1/4"	1 1/2"
10	132	278	520	1050	1600
20	92	190	350	730	1100
30	73	152	285	590	980
40	63	130	245	500	760
50	56	115	215	440	670
60	50	105	195	400	610
70	46	96	180	370	560
80	43	90	170	350	530
90	40	84	160	320	490
100	38	79	150	305	460

$$\text{CFH} = \frac{\text{BTUH FURNACE INPUT}}{\text{CALORIFIC VALUE OF GAS}}$$

CONNECTING THE GAS PIPING - NATURAL GAS

Refer to the Proper Piping Practice drawing for the general layout at the unit. The following rules apply:

1. Use black iron pipe and fittings for the supply piping. The use of a flex connector and/or copper piping is permitted as long as it is in agreement with local codes.
2. Use pipe joint compound on male threads only. Pipe joint compound must be resistant to the action of the fuel used.
3. Use ground joint unions.
4. Install a drip leg to trap dirt and moisture before it can enter the gas valve. The drip leg must be a minimum of three inches long.
5. Use two pipe wrenches when making connection to the gas valve to keep it from turning.
6. Install a manual shut-off valve in a convenient location (within six feet of unit) between the meter and the unit.
7. Tighten all joints securely.
8. The unit must be connected to the building piping by one of the following methods:

- Rigid metallic pipe and fittings
- Semirigid metallic tubing and metallic fittings (Aluminum alloy tubing must not be used in exterior locations)
  - Listed gas appliance connectors used in accordance with the terms of their listing that are completely in the same room as the equipment
  - In the prior two methods above the connector or tubing must be protected from physical and thermal damage. Aluminum alloy tubing and connectors must be coated to protect against external corrosion when in contact with masonry, plaster or insulation or are subject to repeated wettings by liquids (water - not rain water, detergents or sewage).

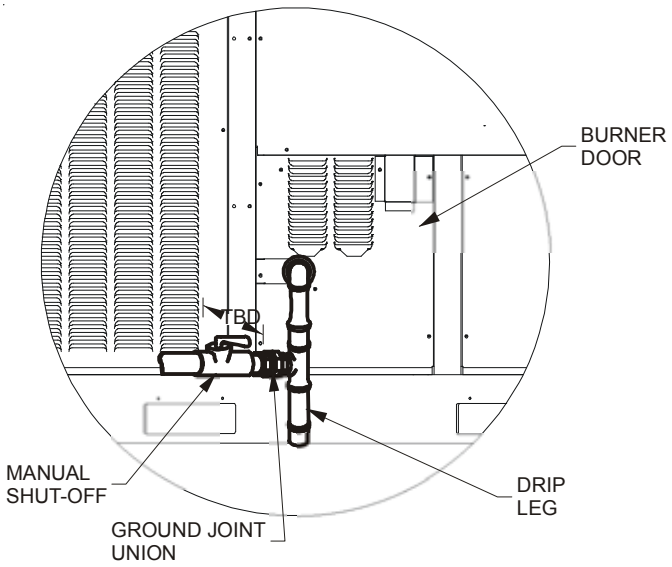

PROPER PIPING PRACTICE

CHECKING THE GAS PIPING

CAUTION

To avoid the possibility of property damage, personal injury or fire, the following instructions must be performed regarding gas connections and pressure testing.

The unit and its gas connections must be leak tested before placing in operation. Because of the danger of explosion or fire, never use a match or open flame to test for leaks. Never exceed specified pressure for testing. Higher pressure may damage the gas valve and cause overfiring which may result in heat exchanger failure.

This unit must be isolated from the gas supply system by closing its individual manual shutoff valve during any pressure testing of the gas supply piping system at test pressures equal to or less than 1/2 psig (3.48 kPa).

TANKS AND PIPING - PROPANE UNITS

WARNING

PERSONAL INJURY HAZARD
Iron Oxide (rust) can reduce the level of odorant in propane gas. A gas detecting device is the only reliable method to detect a propane gas leak. Contact your local propane supplier about installing a gas detecting warning device to alert you in the event that a gas leak should develop. Failure to detect a propane gas leak could result in an explosion or fire which could cause serious personal injury or death.

IMPORTANT NOTE: Propane gas conversion kits must be installed to convert units to propane gas. NOx screens must be removed before converting to LP. Remove burner assembly and pull NOx screens from each burner tube. When all the screens are out, reassemble the burner assembly without the screens.

All propane gas equipment must conform to the safety standards of the National Board of Fire Underwriters (See NBFU Manual 58) or Natural Standards of Canada B149.2, Installation Code for Propane Gas Burning Appliances and Equipment.

For satisfactory operation, propane gas supply pressure must be within 9.7 - 10.3 inches W.C. at the manifold with all gas appliances in operation. Maintaining proper gas pressure depends on three main factors:

1. Vaporization rate, which depends on (a) temperature of the liquid, and (b) "wetted surface" area of the container or containers.
2. Proper pressure regulation. (Two-stage regulation is recommended from the standpoint of both cost and efficiency.)
3. Pressure drop in lines between regulators, and between second stage regulator and the appliance. Pipe size required will depend on length of pipe run and total load of all appliances.

Complete information regarding tank sizing for vaporization, recommended regulator settings, and pipe sizing is available from most regulator manufacturers and propane gas suppliers.

Propane is an excellent solvent, and special pipe dope must be used when assembling piping for this gas as it will quickly dissolve white lead or most standard commercial compounds. Shellac base compounds resistant to the actions of liquefied petroleum gases such as Gasolac®, Stalactic®, Clyde's® or John Crane® are satisfactory.

TYPICAL PROPANE PIPING

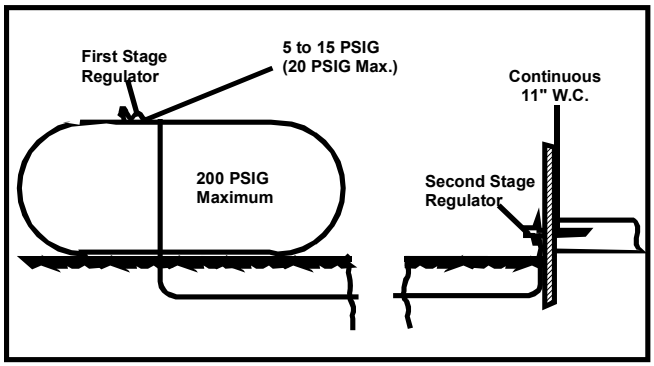

WARNING

Although the unit itself cannot be installed in an excavated or confined space, the gas piping may be routed through such areas and we strongly recommend that you contact your propane supplier about installing a gas detecting warning device that would alert you to a gas leak.

- **Propane gas is heavier than air and any leaking gas can settle in any low areas or confined spaces.**
- **Propane gas odorant may fade, making the gas undetectable except with a warning device.**

An undetected gas leak will create a danger of explosion or fire. If you suspect the presence of gas, follow the instructions on page 9. Failure to do so could result in serious personal injury or death.

PROPANE TANK SIZING (MINIMUM)

MAXIMUM GAS NEEDED TO VAPORIZE*	TANK SIZE REQUIRED IF LOWEST OUTDOOR TEMPERATURE (AVG. FOR 24 HOURS) REACHES						
	32°F	20°F	10°F	0°F	-10°F	-20°F	-30°F
125K BTU/HR (50 CFH)	115 GAL	115 GAL	115 GAL	250 GAL	250 GAL	400 GAL	600 GAL
250K BTU/HR (100 CFH)	250 GAL	250 GAL	250 GAL	400 GAL	500 GAL	1000 GAL	1500 GAL
375K BTU/HR (150 CFH)	300 GAL	400 GAL	500 GAL	500 GAL	1000 GAL	1500 GAL	2500 GAL
500K BTU/HR (200 CFH)	400 GAL	500 GAL	750 GAL	1000 GAL	1500 GAL	2000 GAL	3500 GAL
750K BTU/HR (300 CFH)	750 GAL	1000 GAL	1500 GAL	2000 GAL	2500 GAL	4000 GAL	5000 GAL

* AVERAGE RATE/HOUR WITHDRAWL IN 8 HOUR PERIOD

PROPANE GAS PIPING CHARTS

Sizing Between First and Second Stage Regulator
Maximum Propane Capacities listed are based on 1 PSIG Pressure Drop at 10 PSIG Setting. Capacities in 1,000 BTU/HR

PIPE OR TUBING LENGTH, FEET	TUBING SIZE, O.D., TYPE L					NOMINAL PIPE SIZE, SCHEDULE 40	
	3/8"	1/2"	5/8"	3/4"	7/8"	1/2"	3/4"
30	309	700	1,303	2,205	3,394	1,843	3,854
40	265	599	1,115	1,887	2,904	1,577	3,298
50	235	531	988	1,672	2,574	1,398	2,923
60	213	481	896	1,515	2,332	1,267	2,649
70	196	446	824	1,394	2,146	1,165	2,437
80	182	412	767	1,297	1,996	1,084	2,267
90	171	386	719	1,217	1,873	1,017	2,127
100	161	365	679	1,149	1,769	961	2,009
150	130	293	546	923	1,421	772	1,613
200	111	251	467	790	1,216	660	1,381
250	90	222	414	700	1,078	585	1,224
300	89	201	378	634	976	530	1,109
350	82	185	345	584	898	488	1,020
400	76	172	321	543	836	454	949

To convert to Capacities at 15 PSIG Settings -- Multiply by 1.130
To convert to Capacities at 5 PSIG Settings -- Multiply by 0.879

Sizing Between Single or Second Stage Regulator and Appliance*
Maximum Propane Capacities Listed are Based on 1/2" W.C. Pressure Drop at 11" W.C. Setting. Capacities in 1,000 BTU/HR

PIPE OR TUBING LENGTH, FEET	TUBING SIZE, O.D., TYPE L					NOMINAL PIPE SIZE, SCHEDULE 40				
	3/8"	1/2"	5/8"	3/4"	7/8"	1/2"	3/4"	1"	1-1/4"	1-1/2"
10	49	110	206	348	539	291	608	1,146	2,353	3,525
20	34	76	141	239	368	200	418	788	1,617	2,423
30	27	61	114	192	296	161	336	632	1,299	1,946
40	23	52	97	164	253	137	284	541	1,111	1,665
50	20	46	86	146	224	122	255	480	985	1,476
60	19	42	78	132	203	110	231	436	892	1,337
80	16	36	67	113	174	94	198	372	764	1,144
100	14	32	59	100	154	84	175	330	677	1,014
125	12	28	52	89	137	74	155	292	600	899
150	11	26	48	80	124	67	141	265	544	815
200	10	22	41	69	106	58	120	227	465	697
250	9	19	36	61	94	51	107	201	412	618
300	8	18	33	55	85	46	97	182	374	560
350	7	16	30	51	78	43	89	167	344	515
400	7	15	28	47	73	40	83	156	320	479

*DATA IN ACCORDANCE WITH NFPA PAMPHLET NO. 54

COOLING

The refrigerant used in the system is R-410A. It is a clear, colorless, non-toxic and non-irritating liquid. R-410A is a 50:50 blend of R-32 and R-125. The boiling point at atmospheric pressure is -62.9°F.

A few of the important principles that make the refrigeration cycle possible are: heat always flows from a warmer to a cooler body. Under lower pressure, a refrigerant will absorb heat and vaporize at a low temperature. The vapors may be drawn off and condensed at a higher pressure and temperature to be used again.

The indoor evaporator coil functions to cool and dehumidify the air conditioned spaces through the evaporative process taking place within the coil tubes.

NOTE: The pressures and temperatures shown in the refrigerant cycle illustrations on the following pages are for demonstration purposes only. Actual temperatures and pressures are to be obtained from the "Expanded Performance Chart".

Liquid refrigerant at condensing pressure and temperatures, (270 psig and 122°F), leaves the outdoor condensing coil through the drier and is metered into the indoor coil through the metering device. As the cool, low pressure, saturated refrigerant enters the tubes of the indoor coil, a portion of the liquid immediately vaporizes. It continues to soak up heat and vaporizes as it proceeds through the coil, cooling the indoor coil down to about 48°F.

Heat is continually being transferred to the cool fins and tubes of the indoor evaporator coil by the warm system air. This warming process causes the refrigerant to boil. The heat removed from the air is carried off by the vapor.

As the vapor passes through the last tubes of the coil, it becomes superheated. That is, it absorbs more heat than is necessary to vaporize it. This is assurance that only dry gas will reach the compressor. Liquid reaching the compressor can weaken or break compressor valves.

The compressor increases the pressure of the gas, thus adding more heat, and discharges hot, high pressure superheated gas into the outdoor condenser coil.

In the condenser coil, the hot refrigerant gas, being warmer than the outdoor air, first loses its superheat by heat transferred from the gas through the tubes and fins of the coil. The refrigerant now becomes saturated, part liquid, part vapor and then continues to give up heat until it condenses to a liquid alone. Once the vapor is fully liquefied, it continues to give up heat which subcools the liquid, and it is ready to repeat the cycle.

HEATING

The heating cycle is accomplished by using a unique tubular design heat exchanger which provides efficient gas heating on either natural gas or propane gas fuels. The heat exchangers compact tubular construction provides excellent heat transfer for maximum operating efficiency.

Inshot type gas burners with integral cross lighters are used eliminating the need for adjustable air shutters. The same burner is designed for use on either natural or propane gas fuels.

The induced draft blower draws fuel and combustion air into the burners and heat exchanger for proper combustion. A pressure switch is used in conjunction with the I. D. blower to detect a blocked flue condition.

Blower operation is controlled by the ignition control module. The module allows for field adjustment of the blower delay at the end of the heating cycle. The range of adjustment is for 90, 120, 150 or 180 seconds. The factory delay setting is 30 seconds delay on, 150 seconds delay off.

COOLING

The refrigerant used in the system is R-410A. It is a clear, colorless, non-toxic and non-irritating liquid. R-410A is a 50:50 blend of R-32 and R-125. The boiling point at atmospheric pressure is **-62.9°F.**

A few of the important principles that make the refrigeration cycle possible are: heat always flows from a warmer to a cooler body. Under lower pressure, a refrigerant will absorb heat and vaporize at a low temperature. The vapors may be drawn off and condensed at a higher pressure and temperature to be used again.

The indoor evaporator coil functions to cool and dehumidify the air conditioned spaces through the evaporative process taking place within the coil tubes.

Heat is continually being transferred to the cool fins and tubes of the indoor evaporator coil by the warm system air. This warming process causes the refrigerant to boil. The heat removed from the air is carried off by the vapor.

As the vapor passes through the last tubes of the coil, it becomes superheated. That is, it absorbs more heat than is necessary to vaporize it. This is assurance that only dry gas will reach the compressor. Liquid reaching the compressor can weaken or break compressor valves.

The compressor increases the pressure of the gas, thus adding more heat, and discharges hot, high pressure superheated gas into the outdoor condenser coil.

In the condenser coil, the hot refrigerant gas, being warmer than the outdoor air, first loses its superheat by heat transferred from the gas through the tubes and fins of the coil. The refrigerant now becomes saturated, part liquid, part vapor and then continues to give up heat until it condenses to a liquid alone. Once the vapor is fully liquefied, it continues to give up heat which subcools the liquid, and it is ready to repeat the cycle.

COOLING CYCLE

Cooling Only Models

When the contacts of the room thermostat close, making terminals R to Y and R to G, the low voltage circuit to the contactor is completed starting the compressor and outdoor fan motor. This also energizes the indoor blower through the normally open contacts of the EBTDR on PSC or 3 phase equipped models and through the thermostat Y terminal to the EEM motor on EEM equipped model units.

When the thermostat is satisfied, breaking the circuit between R to Y and R to G, the compressor and outdoor fan motor will stop. The indoor blower will stop after the fan off delay.

If the room thermostat fan selector switch should be set to the "on" position then the indoor blower would run continuous rather than cycling with the compressor.

Heat Pump Models

Any time the room thermostat is switched to cool, the O terminal is energized. This energizes the 24 volt coil on the reversing valve and switches it to the cooling position.

When the contacts of the room thermostat close, this closes the circuit from R to Y and R to G in the unit.

This energizes the compressor contactor and will energize the indoor blower following the EBTDR 7 second fan on delay on PSC or three phase equipped models, and instantly on models equipped with the EEM motor.

When the thermostat is satisfied, it opens its contacts breaking the low voltage circuit causing the compressor contactor to open and indoor fan to stop after the EBTDR 65 second delay on PSC or three phase equipped models, and after the programmed 60 second off delay on units with the EEM motor.

If the room thermostat fan selector switch should be set to the "on" position then the indoor blower would run continuous rather than cycling with the compressor.

HEATING CYCLE

Cooling Only Units

NOTE: The following only applies if the cooling only unit has an approved electric heat kit installed for heating. If auxiliary electric heaters should be used, they may be controlled by outdoor thermostats (OT18-60A or OT/EHR18-60A).

CPC/CPH PSC or Three Phase Equipped Models

With the thermostat set to the heat position and a call for heat, R to W will be energized. This will energize the electric heat sequencers. When the normally open contacts of the heat sequencers close, this will energize the electric resistance heat and the indoor blower motor through the normally closed contacts of the EBTDR.

CPC/CPH EEM Equipped Models

With the thermostat set to the heat position and a call for heat, R to W will be energized. This will energize the electric heat sequencers and the EEM indoor blower motor. When the normally open contacts of the heat sequencers close, this will energize the electric resistance heat.

CPH Heat Pump Units

On a call for first stage heat, the contacts of the room thermostat close. This energizes terminals R to Y and R to G, the low voltage circuit to the contactor is completed starting the compressor and outdoor fan motor. This also energizes the indoor blower through the normally open contacts of the EBTDR after a 7 second on delay on models with PSC blower motors or three phase blower motors, and instantly on models equipped with the EEM motor.

When the thermostat is satisfied, breaking the circuit between R to Y and R to G, the compressor and outdoor fan motor will stop. The indoor blower will stop after the EBTDR 65 second off delay on models with PSC blower motors or three phase blower motors, and after the programmed 60 second off delay on models equipped with the EEM motor.

When auxiliary electric heaters are used, a two stage heating single stage cooling thermostat would be installed for units 6 tons and smaller. Units 7.5 tons & larger require two stage heating and two stage cooling thermostat.

Should the second stage heating contacts in the room thermostat close, which would be wired to W1 at the unit low voltage connections, this would energize the coil(s) of the electric heat relay(s). Contacts within the relay(s) will close, bringing on the electric resistance heaters.

If auxiliary electric heaters should be used, they may be controlled by outdoor thermostats (OT18-60A or OT/EHR18-60A).

Emergency Heat Mode (Heat Pumps)

NOTE: The following only applies if the unit has an approved electric heat kit installed for auxiliary heating.

CPC/CPH PSC or Three Phase Equipped Models Only:

With the thermostat set to the emergency heat position and a call for 2nd stage heat, R to W1 will be energized. This will energize the electric heat sequencers. When the normally open contacts of the heat sequencers close, this will energize the electric resistance heat and the indoor blower motor through the normally closed contacts of the EBTDR.

CPC/CPH EEM Equipped Models Only:

With the thermostat set to the emergency heat position and a call for 2nd stage heat, R to W1 will be energized. This will energize the electric heat sequencers and the EEM motor. The electric heat will be energized through the normally open contacts of the electric heat sequencers. The indoor blower will be energized through W from the thermostat.

DEFROST CYCLE

Package Heat Pumps

The defrosting of the outdoor coil is jointly controlled by the defrost control board and the defrost thermostat.

Solid State Defrost Control

During operation the power to the circuit board is controlled by a temperature sensor, which is clamped to a feeder tube entering the outdoor coil. Defrost timing periods of 30, 60, or 90 minutes may be selected by connecting the circuit board jumper to 30, 60, or 90 respectively. Accumulation of time for the timing period selected starts when the sensor closes (approximately 34° F), and when the room thermostat calls for heat. At the end of the timing period, the unit's defrost cycle will be initiated provided the sensor remains closed. When the sensor opens (approximately 60° F), the defrost cycle is terminated and the timing period is reset. If the defrost cycle is not terminated due to the sensor temperature, a ten minute override interrupts the unit's defrost period.

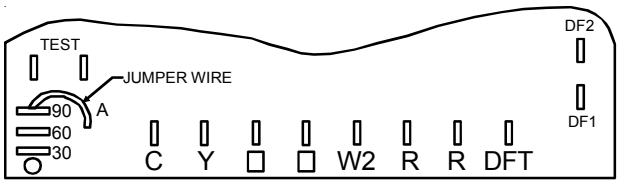

FAN OPERATION

Continuous Fan Mode

CPC/CPH PSC Equipped Models Only:

If the thermostat calls for continuous fan, the indoor blower will be energized from the normally open contacts of the EBTDR after a 7 second delay.

Anytime there is a call for continuous fan, the indoor blower will be energized through the normally open contacts of the EBTDR, regardless of a call for heat or cool.

If the thermostat is not calling for heat or cool, and the fan switch on the thermostat is returned to the automatic position, the fan will stop after a 65 second delay.

CPC/CPH EEM Equipped Models Only:

If the thermostat calls for continuous fan, the indoor blower will be energized from the G terminal of the thermostat to the EEM blower motor.

If a call for heat or cool occurs during a continuous fan call, the EEM motor will always recognize the call for the highest speed and ignore the lower speed call.

If the thermostat is not calling for heat or cool, and the fan switch on the thermostat is returned to the automatic position, the fan will stop after the programmed 60 second off delay on units with the EEM motor.

SEQUENCE OF OPERATION/HEATING

SINGLE STAGE HEAT/SINGLE STAGE COOLING

This unit has one (RS) Manual Reset Limit Control Switch. Check the limit to make sure it has not tripped. The limit may arrive at the job site tripped as a result of shipping shock. If the ventor motor comes on, but the gas valve does not open during the trials for ignition, check to see if the RS (rollout switch, located in the burner assembly) requires resetting.

1. With electricity and gas turned on, the system switch in the “HEAT” or “AUTO” position and the fan switch in the “AUTO” position, the thermostat will close the circuit between unit terminals R and W (R-W) when the temperature falls below the thermostat setting.
2. D1 on IIC energizes relay IDMR.
3. Relay IDMR energizes the ventor motor IDM.
4. Operation of the ventor motor closes the pressure switch PS located in the burner compartment. Unless excessive temperatures or shipping shock have opened high limit control LS, power is fed to the integrated ignition control, which then initiates a 15-second pre-purge time delay. During this period, the ventor motor will clear the combustion chamber of any residual gas.
5. After the pre-purge period, the ignition control energizes the gas valve and simultaneously initiates a “three (3)-try” spark ignition sequence.
6. When the burners are ignited, a minimum **four (4) micro-**amp DC current will flow through the flame between the sensor electrode and the grounded burner.
7. When the controller proves that the flame has been established, it will keep the gas valve energized and discontinue the ignition spark. First stage manifold pressure will be approximately 2.0" w.c. for natural gas and 6.0" w.c. for propane (LP). High stage manifold pressure will be approximately 3.5" w.c. for natural gas and 10.0" w.c. for propane (LP).
8. If the control is unable to ignite the burners after its initial attempt, it will initiate another purge and spark sequence. A third purge and spark sequence will be initiated if the second attempt is unsuccessful. If the third attempt is unsuccessful, the controller will close the gas valve and lock itself out. It may be reset by momentarily interrupting power. This may be accomplished by briefly lowering the room thermostat set-point below room temperature, or by shutting off the main power to the unit.
9. Integrated ignition control will close its normally open contacts after a delay of approximately 30 seconds. This action energizes contactor BC on PSC equipped model units or the heat speed tap on EEM equipped model units and starts the supply fan motor. Operation of the supply fan circu-lates air across the heat exchanger and delivers heated air to the conditioned space.
10. When the space temperature rises, the thermostat will open R-W. Opening R-W will cause the gas valve to close, and the furnace to shut down.
11. The furnace has three high temperature limit controls, which can shut down the burner. They do not shut down the ventor motor.

2 STAGE HEAT/2 STAGE COOLING

HEATING

This unit has one (RS) Manual Reset Limit Control Switch. Check the limit to make sure it has not tripped. The limit may arrive at the job site tripped as a result of shipping shock.

If the ventor motor comes on, but the unit does not attempt ignition, check if the ALS (Automatic Reset Hight Limit Control Switch) requires resetting.

1. With electricity and gas turned on, the system switch in the “HEAT” or “AUTO” position and the fan switch in the “AUTO” position, the thermostat will close the circuit between unit terminals R and W (R-W) when the temperature falls below the thermostat setting.
2. D1 on IIC energizes relay IDMR.
3. Relay IDMR energizes the ventor motor IDM.
4. Operation of the vent motor closes the pressure switch PS located in the burner compartment. the control then initiates a 15-second pre-purge time delay. During this period, the ventor motor will clear the combustion chamber of any residual gas.
5. After the pre-purge period, the ignition control energizes the WI-C gas valve and simultaneously initiates a “three (3)-try” spark ignition sequence.
6. When the burners are ignited, a minimum four (4) micro-amp DC current will flow through the flame between the sensor electrode and the grounded burner.
7. When the controller proves that the flame has been established, it will keep the gas valve energized and discontinue the ignition spark. First stage manifold pressure will be approximately 2.0" w.c. for natural gas and 7.0" w.c. for propane (LP).
10. If the control is unable to ignite the burners after its initial attempt, it will initiate another purge and spark sequence. A third purge and spark sequence will be initiated if the second attempt is unsuccessful. If the third attempt is unsuccessful, the controller will close the gas valve and lock itself out. It may be reset by momentarily interrupting power. This may be accomplished by briefly lowering the room thermostat set-point below room temperature, or by shutting off the main power to the unit. (See TP-105 for more details.)
11. Integrated ignition control will close its normally open contacts after a delay of approximately 30 seconds. This action energizes contactor BC and starts the supply fan motor. Operation of the supply fan circu-lates air across the heat exchanger and delivers heated air to the conditioned space.

12. When the space temperature rises, the thermostat will open R-W. Opening R-W will cause the gas valve to close, and the furnace to shut down.
13. The furnace has three high temperature limit controls, which can shut down the burner. They do not shut down the ventor motor.

SINGLE STAGE & TWO STAGE

AUTOMATIC RESET HIGH LIMIT CONTROL (LS)

The Automatic Reset High Limit Control (LS) is located in the heat exchanger compartment with its sensing element facing the heat exchanger. It will cycle the furnace off if the temperature exceeds 100°F plus maximum temperature rise.

AUTOMATIC RESET HIGH LIMIT CONTROL (ALS)

Located in the blower compartment on the blower housing, it senses air temperature within the blower compartment and protects the filters from excessive temperature. It will shutdown the furnace if it senses excessive temperatures.

MANUAL RESET FLAME ROLLOUT CONTROL (RS)

Located in the burner compartment at the top of the burner assembly, it senses high temperature that could occur if the heat exchanger tubes were plugged and the flame was rolling out instead of entering the tubes. It has a manual push-button reset that cannot be actuated until the limit control has cooled.

TROUBLESHOOTING

IGNITION CONTROL ERROR CODES

The following presents probable causes of questionable unit operation. Refer to *Diagnostic Indicator Chart* for an interpretation of the signal and to this section for an explanation.

Remove the control box access panel and note the number of diagnostic LED flashes. Refer to *Diagnostic Indicator Chart* for an interpretation of the signal and to this section for an explanation.

ABNORMAL OPERATION - HEATING

Internal Control Failure

If the integrated ignition control in this unit encounters an internal fault, it will go into a “hard” lockout and turn off the diagnostic LED. If diagnostic LED indicates an internal fault, check power supply to unit for proper voltage, check all fuses, circuit breakers and wiring. Disconnect electric power for five seconds. If LED remains off after restoring power, replace control.

External Lockout

An external lockout occurs if the integrated ignition control determines that a measurable combustion cannot be established within three (3) consecutive ignition attempts. If flame is not established within the seven (7) second trial for ignition, the gas valve is deenergized, 15 second inter-purge cycle is completed, and ignition is reattempted. The control will repeat this routine three times if a measurable combustion is not established. The control will then shut off the induced draft blower and go into a lockout state.

If flame is established but lost, the control will energize the circulator blower at the heat speed and then begin a new ignition sequence. If flame is established then lost on subsequent attempts, the control will recycle for four (4) consecutive ignition attempts (five attempts total in one call for heat) before locking out.

The diagnostic fault code is 1 flash for a lockout due to failed ignition attempts or flame dropouts. The integrated control will automatically reset after one hour, or it can be reset by removing the thermostat signal or disconnecting the electrical power supply for over five seconds. If the diagnostic LED indicates an external lockout, perform the following checks:

- *Check the supply and manifold pressures*
- *Check the gas orifices for debris*
- *Check gas valve for proper operation*
- *Check secondary limit*
  A dirty filter, excessive duct static, insufficient air flow, a faulty limit, or a failed circulator blower can cause this limit to open. Check filters, total external duct static, circulator blower motor, blower motor speed tap (see wiring diagram), and limit. An interruption in electrical power during a heating cycle may also cause the auxiliary limit to open. The automatic reset secondary limit is located on top of the circulator blower assembly.
- *Check rollout limit*
  If the burner flames are not properly drawn into the heat exchanger, the flame rollout protection device will open. Possible causes are restricted or blocked flue passages, blocked or cracked heat exchanger, a failed induced draft blower, or insufficient combustion air. The rollout protection device is a manual reset limit located on the burner bracket. The cause of the flame rollout must be determined and corrected before resetting the limit.
- *Check flame sensor*
  A drop in flame signal can be caused by nearly invisible coating on the sensor. Remove the sensor and carefully clean with steel wool.
- *Check wiring*
  Check wiring for opens/shorts and miswiring.

IMPORTANT: If you have to frequently reset your gas/electric package unit, it means that a problem exists that should be corrected. Contact a qualified servicer for further information.

PRESSURE SWITCH STUCK OPEN

A pressure switch stuck open can be caused by a faulty pressure switch, faulty wiring, a disconnected or damaged hose, a blocked or restricted flue or hose, or a faulty induced draft blower.

If the control senses an open pressure switch during the prepurge cycle, the induced draft blower only will be energized. If the pressure switch opens after ignition has begun the gas valve is deenergized, the circulator blower heat off cycle begins, and the induced draft blower remains on. The diagnostic fault code is two flashes.

PRESSURE SWITCH STUCK CLOSED

A stuck closed pressure switch can be caused by a faulty pressure switch or faulty wiring. If the control encounters a pressure switch stuck closed, the induced draft blower remains off. The diagnostic LED code for this fault is three (3) flashes.

OPEN THERMAL PROTECTION DEVICE

If the primary limit switch opens, the gas valve is immediately deenergized, the induced draft and air circulating blowers are energized. The induced draft and air circulator blowers remain energized until the limit switch recloses. The diagnostic fault code for an open limit is four (4) flashes.

A primary limit will open due to excessive supply air temperatures. This can be caused by a dirty filter, excessive duct static, insufficient air flow, or a faulty limit. Check filters, total external duct static, blower motor, blower motor speed tap (see wiring diagram), and limit. This limit will automatically reset once the temperature falls below a preset level.

FLAME DETECTED WITH GAS VALVE CLOSED

If flame is detected with the gas valve deenergized, the combustion and air circulator blowers are energized. The diagnostic fault code is five (5) flashes for this condition. The control can be reset by removing the power supply to the unit or it will automatically reset after one hour. Miswiring is the probable cause for this fault.

ABNORMAL OPERATION - COOLING

SHORT CYCLE COMPRESSOR DELAY

The automatic ignition control has a built-in feature that prevents damage to the compressor in short cycling situations. In the event of intermittent power losses or intermittent thermostat operation, the ignition control will delay output to the compressor contactor for three minutes from the time power is restored. (Compressor is off a total of three minutes). The diagnostic LED will flash six (6) times to indicate the compressor contactor output is being delayed.

NOTE: Some electronic thermostats also have a built-in compressor short cycle timer that may be longer than the three minute delay given above. If you are using an electronic thermostat and the compressor has not started after three minutes, wait an additional five minutes to allow the thermostat to complete its short cycle delay time.

Typical Package Cooling or Package Gas

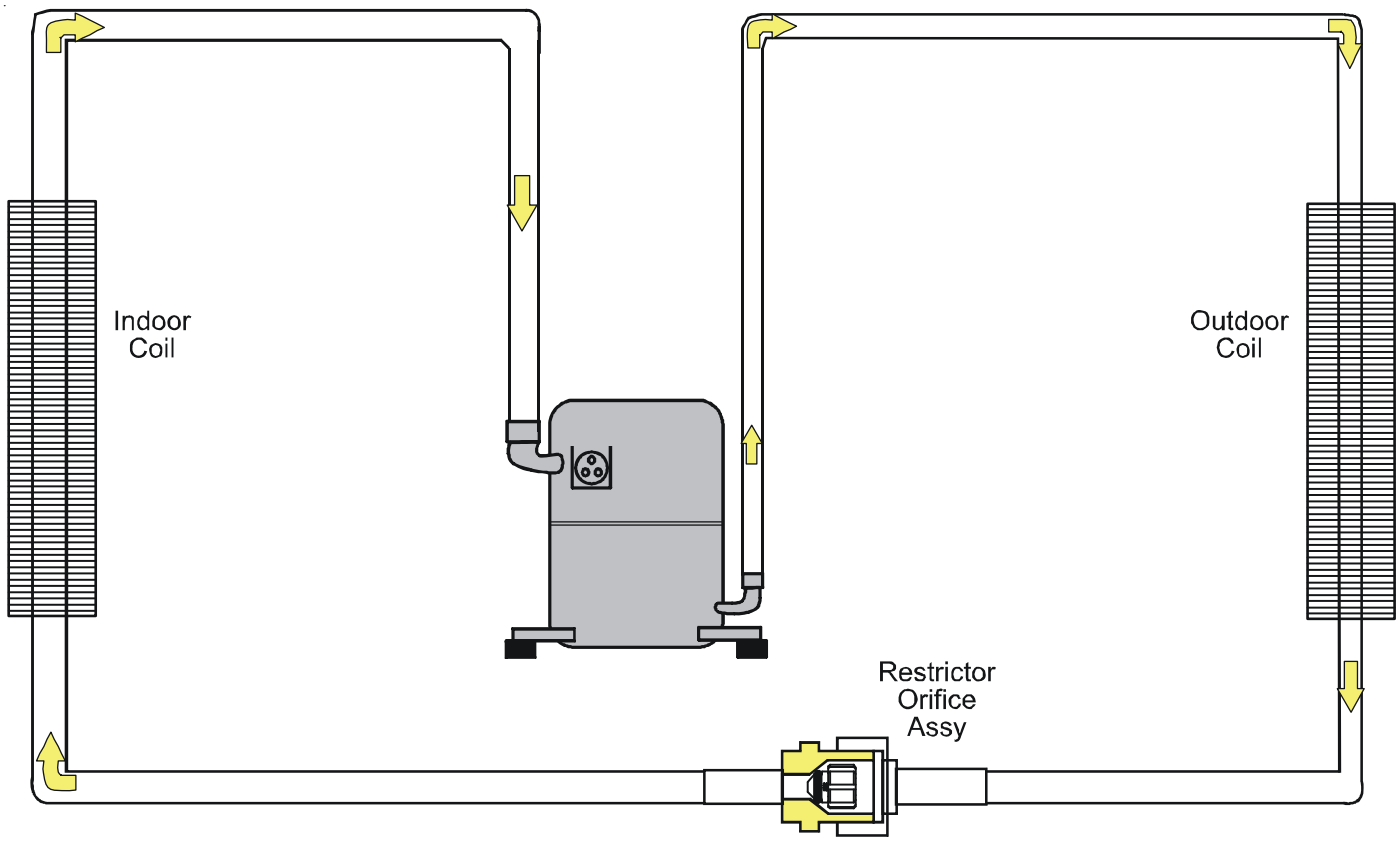

Either a thermostatic expansion valve or restrictor orifice assembly may be used depending on model. Refer to the parts catalog for the model being serviced.

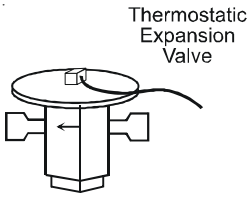

Restrictor Orifice Assembly in Cooling Operation

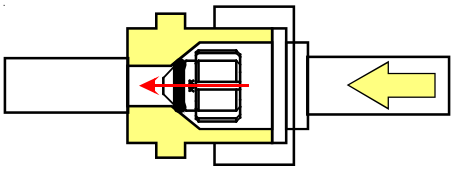

In the cooling mode the orifice is pushed into its seat forcing refrigerant to flow through the metered hole in the center of the orifice.

Typical Heat Pump System in Cooling

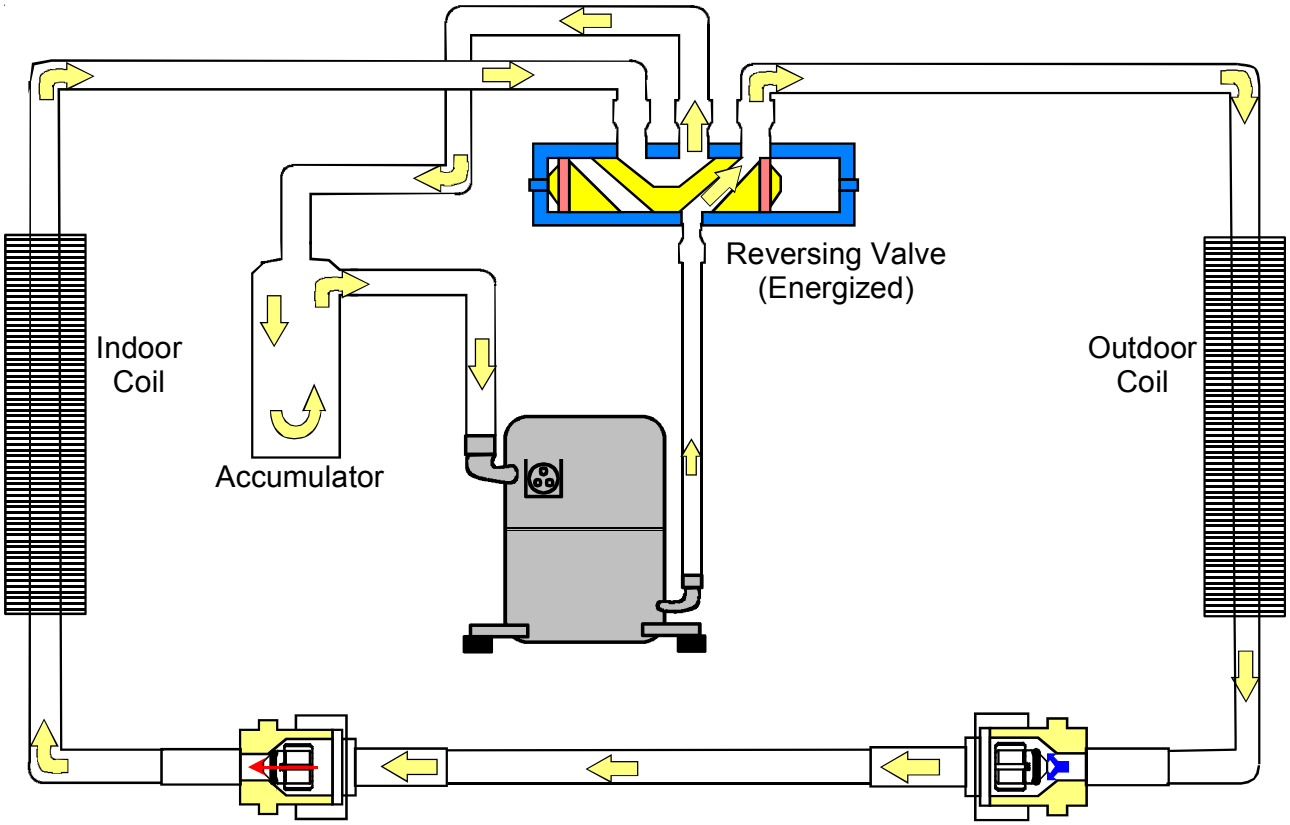

Typical Heat Pump System in Heating

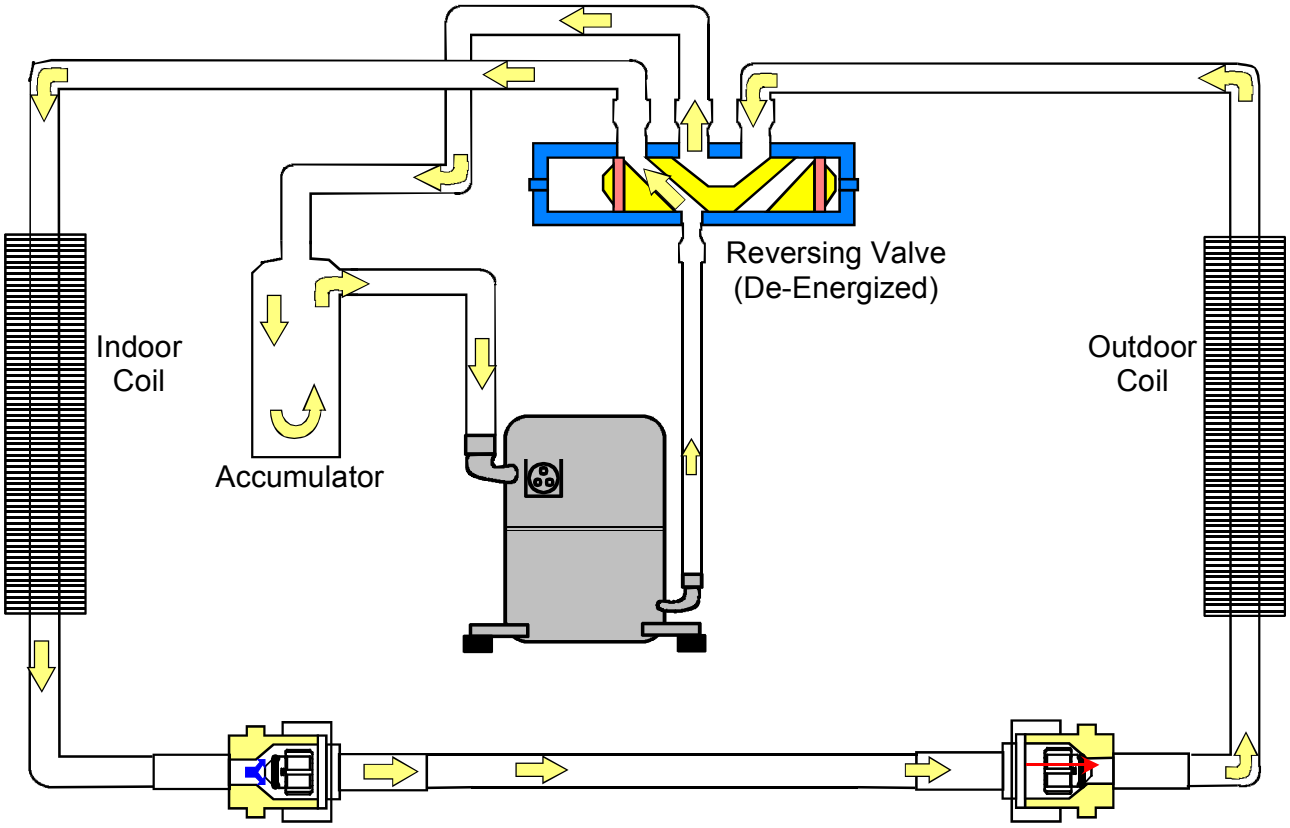

SYSTEM OPERATION

Direct Spark Ignition (DSI) Systems

CPG units are equipped with a direct spark ignition system. Ignition is provided by 22,000 volt electronic spark. A flame sensor then monitors for the presence of flame and closes the gas valve if flame is lost.

The system may be controlled by most good heating and cooling thermostats with an adjustable heat anticipator.

NOTE: Some night setback thermostats that do not have a common terminal use a power robbing circuit in the off cycle to maintain the batteries. This type of thermostat may interfere with the operation of the ignition control module and should not be used.

WARNING

HIGH VOLTAGE!
Disconnect ALL power before servicing or installing this unit. Multiple power sources may be present. Failure to do so may cause property damage, personal injury or death.

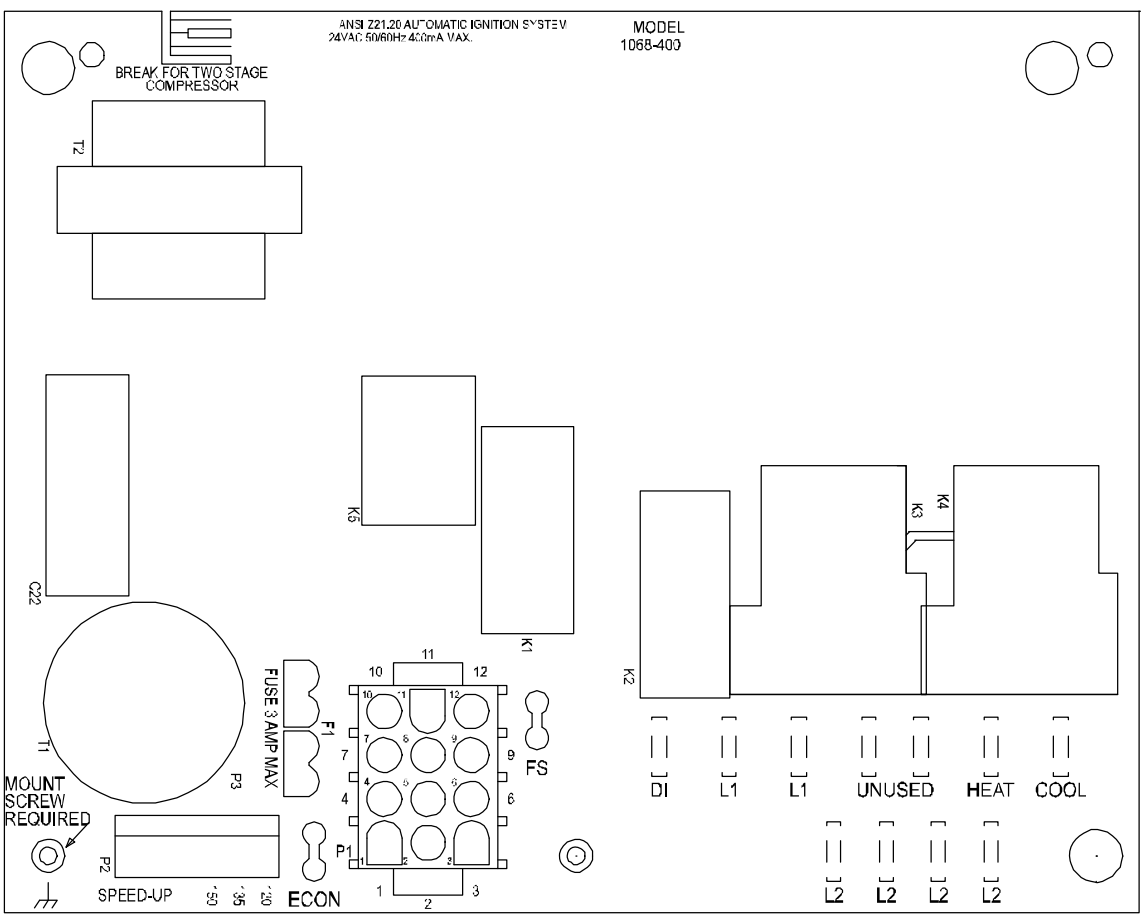

SCHEDULED MAINTENANCE

The owner should be made aware of the fact, that, as with any mechanical equipment, Light Commercial Package Cooling and Heat Pump units require regularly scheduled maintenance to preserve high performance standards, prolong the service life of the equipment, and lessen the chances of costly failure.

In many instances the owner may be able to perform some of the maintenance; however, the advantage of a service contract, which places all maintenance in the hands of a trained serviceman, should be pointed out to the owner.

WARNING

HIGH VOLTAGE!
Disconnect ALL power before servicing or installing this unit. Multiple power sources may be present. Failure to do so may cause property damage, personal injury or death.

ONCE A MONTH

1. Inspect the return filters of the evaporator unit and clean or change if necessary.

NOTE: Depending on operation conditions, it may be necessary to clean the filters more often. If permanent type filters are used, they should be washed with warm water, dried and sprayed with an adhesive according to manufacturers recommendations.

2. When operating on the cooling cycle, inspect the condensate line piping from the evaporator coil. Make sure the piping is clear for proper condensate flow.

ONCE A YEAR

Qualified Service Personnel Only

1. Clean the indoor and outdoor coils.
2. Clean the casing of the outdoor unit inside and out .
3. Motors and bearings are permanently lubricated and do not require oiling. TO AVOID PREMATURE MOTOR FAILURE, DO NOT OIL.
4. Manually rotate the outdoor fan and indoor blower to be sure they run freely.
5. Inspect the control panel wiring, compressor connections, and all other component wiring to be sure all connections are tight. Inspect wire insulation to be certain that it is good.
6. Check the contacts of the compressor contactor. If they are burned or pitted, replace the contactor.
7. Using a halide or electronic leak detector, check all piping and etc. for refrigerant leaks.
8. Start the system and run both a Cooling & Heating Performance Test. If the results of the test are not satisfactory, see the "Service Problem Analysis" Chart forf the possible cause.
9. Correct belt tension is very important to the life of your belt. Too loose a belt will shorten its life; too tight, premature motor and bearing failure will occur. Check you belt drive for adequate “run-in” belt tension by measuring the force required to deflect the belt at the midpoint of the span length. Belt tension force can be measured using a belt tension gauge, available through most belt drive manufacturers. Replace belt, if necessary.

TEST EQUIPMENT

Proper test equipment for accurate diagnosis is as essential as regular hand tools.

The following is a must for every service technician and service shop:

1. Thermocouple type temperature meter - measure dry bulb temperature.
2. Sling psychrometer- measure relative humidity and wet bulb temperature.
3. Amprobe - measure amperage and voltage.
4. Volt-Ohm Meter - testing continuity, capacitors, and motor windings.
5. Accurate Leak Detector - testing for refrigerant leaks.
6. High Vacuum Pump - evacuation.
7. Electric Vacuum Gauge, Manifold Gauges and high vacuum hoses - to measure and obtain proper vacuum.
8. Accurate Electronic Scale - measure proper refrigerant charge.
9. Inclined Manometer - measure static pressure and pressure drop across coils.

Other recording type instruments can be essential in solving abnormal problems, however, in many instances they may be rented from local sources.

Proper equipment promotes faster, more efficient service, and accurate repairs with less call backs.

WARNING

HIGH VOLTAGE!
Disconnect ALL power before servicing or installing this unit. Multiple power sources may be present. Failure to do so may cause property damage, personal injury or death.

WARNING

To prevent personal injury or death due to improper installation, adjustment, alteration, service or maintenance, refer to this manual. For additional assistance or information, consult a qualified installer, service agency or the gas supplier.

CAUTION

Sheet metal parts, screws, clips and similar items inherently have sharp edges, and it is necessary that the installer and service personnel exercise caution.

Preventive maintenance is the best way to avoid unnecessary expense and inconvenience. Have this system inspected at regular intervals by qualified service personnel, at least twice a year. Routine maintenance should cover the following items:

1. Tighten all belts, set screws, and wire connections.
2. Clean evaporator and condenser coils mechanically or with cold water, if necessary. Usually any fouling is only matted on the entering air face of the coil and can be removed by brushing.
3. Lubricate motor bearings.
4. Align or replace belts as needed.
5. Replace filters as needed (see below).
6. Check for blockage of condensate drain.
7. Check power and control voltages.
8. Check running amperage.
9. Check operating temperatures and pressures.
10. Check and adjust temperature and pressure controls.
11. Check and adjust damper linkages.
12. Check operation of all safety controls.
13. Examine gas furnaces (see below and the User's Information Manual).
14. Check condenser fans and tighten set screws.

Filters

CAUTION

To prevent property damage due to fire and loss of equipment efficiency or equipment damage due to dust and lint build up on internal parts, never operate unit without an air filter installed in the return air system.

Every application may require a different frequency of replacement of dirty filters. Filters must be replaced at least every three (3) months during operating seasons.

Dirty filters are the most common cause of inadequate heating or cooling performance. Filter inspection should be made at least every two months; more often if necessary because of local conditions and usage.

Dirty throwaway filters should be discarded and replaced with a new, clean filter.

Disposable return air filters are supplied with this unit. See the unit Specification Sheet or Technical Manual for the correct size and part number. To remove the filters, remove the filter access panel on return side of the unit.

Cabinet Finish Maintenance

Use a fine grade automotive wax on the cabinet finish to maintain the finish's original high luster. This is especially important in installations with extended periods of direct sunlight.

Clean Outside Coil (Qualified Servicer Only)

The coil with the outside air flowing over it should be inspected annually and cleaned as frequently as necessary to keep the finned areas free of lint, hair and debris.

Condenser, Evaporator, and Induced Draft Motors

Bearings on the air circulating blower motor, condenser motor and the combustion fan motor are permanently lubricated. No additional oiling is required.

Flame Sensor (Qualified Servicer Only)

A drop in the flame current can be caused by a nearly invisible coating on the flame sensor. This coating, created by the fuel or combustion air supply, can be removed by carefully cleaning the flame sensor with steel wool.

NOTE: After cleaning, the microamp signal should be stable and in the range of 4 - 6 microamps DC.

Flue Passages (Qualified Servicer Only)

At the start of each heating season, inspect and, if necessary, clean the unit flue passage.

Lubrication

The fan shaft bearings, the 1 to 2 HP supply fan motors the condenser fan motors and compressors are permanently lubricated.

Inspection & Cleaning

All flue product carrying areas of the furnace, its vent system, and main burners should be examined by a qualified service agency before the start of each heating season. This examination is necessary for continued safe operation. Particular attention should be given to deterioration from corrosion or other sources. This examination is accomplished in the following manner.

1. Disconnect power to the unit and remove furnace section access panel.
2. Remove burner assembly:
   a. Disconnect the wires from the gas valve after noting which wires are connected to each terminal.
   b. Disconnect wires from the flame rod and ignition electrode.
   c. Disconnect the gas piping at the union.
   d. The entire burner assembly can now be removed from the unit and inspected.

NOTE: Use all screws that were removed; they are necessary for safe and proper operation of the unit.

3. Reinstall the burner assembly.
4. Inspect and periodically clean the vent outlet (bird screen) on the access panel.
5. Check operation.

NOTE: Periodic observation of the flame and a log of $C0_2$ measurements are recommended. This will aid in determining whether the furnace is operating efficiently or if the furnace requires cleaning.

Flames should be stable, soft and blue (dust may cause orange tips but must not be yellow). The flames must extend directly outward from the burner without curling, floating or lifting off.

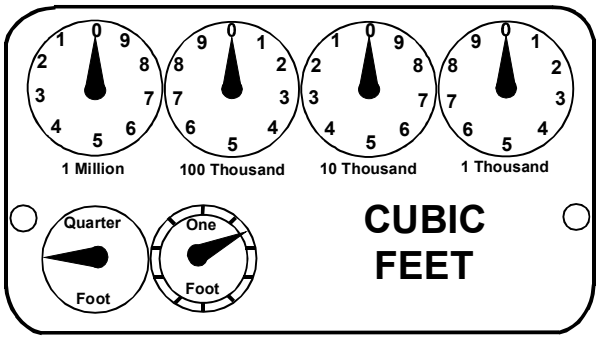

GAS RATE -- CUBIC FEET PER HOUR

Seconds for One Revolution	Size of Test Dial 1/4 cu/ft	1/2 cu/ft	1 cu/ft	2 cu/ft	5 cu/ft	Seconds for One Revolution	Size of Test Dial 1/4 cu/ft	1/2 cu/ft	1 cu/ft	2 cu/ft	5 cu/ft
10	90	180	360	720	1800	36	25	50	100	200	500
11	82	164	327	655	1636	37	--	--	97	195	486
12	75	150	300	600	1500	38	23	47	95	189	474
13	69	138	277	555	1385	39	--	--	92	185	462
14	64	129	257	514	1286	40	22	45	90	180	450
15	60	120	240	480	1200	41	--	--	--	176	439
16	56	113	225	450	1125	42	21	43	86	172	429
17	53	106	212	424	1059	43	--	--	--	167	419
18	50	100	200	400	1000	44	--	41	82	164	409
19	47	95	189	379	947	45	20	40	80	160	400
20	45	90	180	360	900	46	--	--	78	157	391
21	43	86	171	343	857	47	19	38	76	153	383
22	41	82	164	327	818	48	--	--	75	150	375
23	39	78	157	313	783	49	--	--	--	147	367
24	37	75	150	300	750	50	18	36	72	144	360
25	36	72	144	288	720	51	--	--	--	141	355
26	34	69	138	277	692	52	--	--	69	138	346
27	33	67	133	265	667	53	17	34	--	136	340
28	32	64	129	257	643	54	--	--	67	133	333
29	31	62	124	248	621	55	--	--	--	131	327
30	30	60	120	240	600	56	16	32	64	129	321
31	--	--	116	232	581	57	--	--	--	126	316
32	28	56	113	225	563	58	--	31	62	124	310
33	--	--	109	218	545	59	--	--	--	122	305
34	26	53	106	212	529	60	15	30	60	120	300
35	--	--	103	206	514						

Heating Performance Test

Before attempting to diagnose an operating fault, run a Heating Performance Test and apply the results to the Service Problem Analysis Guide.

To conduct a heating performance test, the BTU input to the package gas unit must be calculated.

After the heating cycle has been in operation for at least fifteen minutes and with all other gas appliances turned off, the gas meter should be clocked.

To find the BTU input, multiply the number of cubic feet of gas consumed per hour by the heating value of the gas being used. (The calorific value of the gas being used is found by contacting your local utility.)

Example:

It takes fifty-two (52) seconds on the gas meter for the hand on the cubic foot dial to make one complete revolution, with all appliances off, except the unit. Using the gas rate chart, observe the fifty-two (52) seconds, locate and read across to the one (1) cubic foot dial column. There you will find the number 69, which shows that sixty-nine (69) cubic feet of gas will be consumed in one (1) hour.

Let's assume the local gas utility has stated that the calorific value of the gas is 1025 BTU per cubic foot.

Multiplying the sixty-nine (69) cubic feet by 1025 BTU/ft^3 gives us an input of 70,725 BTU/hr.

Checking the BTU input on the rating plate of the unit being tested.

EXAMPLE: CPG060701DX

INPUT: 70,000 BTU/HR

OUTPUT CAP: 56,0000 BTU/HR

Should the figure you calculated not fall within five (5) percent of the nameplate rating of the unit, adjust the gas valve pressure regulator or resize orifices. **In no case should the input exceed that shown on the rating plate.**

CAUTION

Always connect a manometer to the 1/8” pipe tap at the gas valve before adjusting the pressure regulator. In no case should the final manifold pressure vary more than plus or minus .3 inches water column from 3.5 inches water column for natural gas or 10 inches water column for propane gas.

To adjust the pressure regulator on the gas valve, turn down (clockwise) to increase pressure and input, and out (counter-clockwise) to decrease pressure and input.

Since propane gas is not normally installed with a gas meter, clocking will be virtually impossible. The gas orifices used with propane are calculated for 2500 BTU gas per cubic foot and with proper inlet pressures and correct piping size, full capacity will be obtained.

With propane gas, no unit gas valve regulator is used; however, the second stage supply line pressure regulator should be adjusted to give 11" water column with all other gas consuming appliances running.

The dissipation of the heat transferred to the heat exchanger is now controlled by the amount of air circulated over its surface.

The flow rate (CFM) of air circulated is governed by the external static pressure in inches of water column of duct work, cooling coil, registers and etc., applied externally to the unit versus the motor speed tap.

A properly operating unit must have the BTU input and flow rate (CFM) of air, within the limits shown to prevent short cycling of the equipment. As the external static pressure goes up, the temperature rise will also increase. Consult the proper tables for temperature rise limitation.

COOLING ANALYSIS CHART

Complaint	No Cooling							Unsatisfactory Cooling				System Operating Pressures					
POSSIBLE CAUSE DOTS IN ANALYSIS GUIDE INDICATE "POSSIBLE CAUSE" SYMPTOM	System will not start	Compressor will not start - fan runs	Comp. and Cond. Fan will not start	Evaporator fan will not start	Condenser fan will not start	Compressor runs - goes off on overload	Compressor cycles on overload	System runs continuously - little cooling	Too cool and then too warm	Not cool enough on warm days	Certain areas too cool, others too warm	Compressor is noisy	Low suction pressure	High suction pressure	High head pressure	Test Method Remedy	See Service Procedure Ref.
Power Failure	●															Test Voltage	S-1
Blown Fuse	●		●	●												Inspect Fuse Size & Type	S-1
Unbalanced Power, 3PH		●				●	●									Test Voltage	S-1
Loose Connection	●			●		●										Inspect Connection - Tighten	S-2, S-3
Shorted or Broken Wires	●	●	●	●	●	●										Test Circuits With Ohmmeter	S-2, S-3
Open Fan Overload				●	●											Test Continuity of Overload	S-17A
Faulty Thermostat	●		●	●					●							Test Continuity of Thermostat & Wiring	S-3
Faulty Transformer	●		●													Check Control Circuit with Voltmeter	S-4
Shorted or Open Capacitor		●		●	●	●	●									Test Capacitor	S-15
Internal Compressor Overload Open		●														Test Continuity of Overload	S-17A
Shorted or Grounded Compressor		●				●										Test Motor Windings	S-17B
Compressor Stuck		●				●	●									Use Test Cord	S-17D
Faulty Compressor Contactor			●		●	●										Test Continuity of Coil & Contacts	S-7, S-8
Faulty Fan Relay				●												Test Continuity of Coil And Contacts	S-7
Open Control Circuit				●												Test Control Circuit with Voltmeter	S-4
Low Voltage		●				●	●									Test Voltage	S-1
Faulty Evap. Fan Motor				●									●			Repair or Replace	S-16
Shorted or Grounded Fan Motor					●										●	Test Motor Windings	S-16
Improper Cooling Anticipator							●		●							Check Resistance of Anticipator	S-3B
Shortage of Refrigerant							●	●					●			Test For Leaks, Add Refrigerant	S-101,103
Restricted Liquid Line							●	●					●		●	Remove Restriction, Replace Restricted Part	S-112
Dirty Air Filter								●		●	●		●			Inspect Filter-Clean or Replace	
Dirty Indoor Coil								●		●	●		●			Inspect Coil - Clean	
Insufficient air across Indoor Coil								●		●	●		●			Check Blower Speed and Rotation, Belt, Pulleys, Duct Static, Filter	S-200,205, 206, 207
Too much air across Indoor Coil														●		Reduce Blower Speed, Check Pulley Adjustment	S-205, 207
Overcharge of Refrigerant						●	●					●		●	●	Recover Part of Charge	S-113
Dirty Outdoor Coil						●	●	●		●					●	Inspect Coil - Clean	
Noncondensibles							●	●		●					●	Recover Charge, Evacuate, Recharge	S-114
Recirculation of Condensing Air							●	●		●					●	Remove Obstruction to Air Flow	
Infiltration of Outdoor Air								●		●	●					Check Windows, Doors, Vent Fans, Etc.	
Improperly Located Thermostat						●			●							Relocate Thermostat	
Air Flow Unbalanced									●		●					Readjust Air Volume Dampers	
System Undersized								●		●						Refigure Cooling Load	
Broken Internal Parts												●				Replace Compressor	S-115
Broken Valves								●				●		●		Test Compressor Efficiency	S-104
Inefficient Compressor								●						●		Test Compressor Efficiency	S-104
Expansion Device Restricted						●	●	●		●			●		●	Remove Restriction, Replace Expansion Device	111
Loose Hold-down Bolts												●				Tighten Bolts	
Flowrator Not Seating Properly								●						●		Check Flowrator & Seat or Replace Flowrator	S-111

● **Cooling Cycle**

GAS HEATING ANALYSIS CHART

Complaint	No Heat				Unsatisfactory Heat						Test Method Remedy	See Service Procedure Reference
POSSIBLE CAUSE DOTS IN ANALYSIS GUIDE INDICATE "POSSIBLE CAUSE" SYMPTOM	System Will Not Start	Burner Won't Ignite	Burner Ignites-Locks Out	Burner Lights - Little or No Air Through Vents	Burner Shuts Off prior to T'Stat being Satasfied	Short Cycles	Long Cycles	Soot and /or Fumes	To Much Heat	Not Enough Heat		
Power Failure	●										Test Voltage	S-1
Blown Fuse	●										Test Voltage	S-1
Loose Connection	●										Check Wiring	S-2, S-3
Shorted or Broken Wires	●										Check Wiring	S-2, S-3
No Low Voltage	●										Check Transformer	S-4
Faulty Thermostat	●					●	●		●		Check Thermostat	S-3
Faulty Transformer	●										Check Transformer	S-4
Poor or High Resistance Ground			●								Measure Ground Resistance	S-313
Improper Heat Anticipator Setting						●	●		●	●	Adjust Heat Anticipator Setting	S-3
Improper Thermostat Location						●	●		●	●	Relocate Thermostat	
Faulty Limit or Roll Out Switch		●			●						Test Control	S-300-302
Faulty Flame Sensor			●								Test Flame Sensor	S-314
Faulty Ignition Control	●	●	●	●							Test Control	S-313
Gas Valve or Gas Supply Shut Off		●									Turn Valves to On Position	S-304
Faulty Induced Draft Blower	●	●						●			Test Blower	S-303
Dirty Flame Sensor, Low uA			●								Clean Flame Sensor	S-314
Flame Sensor not in Flame, Low uA			●								Test/Adjust Position of Flame Sensor	S-314
Faulty Gas Valve		●						●		●	Replace Gas Valve	S-304
Open Auxillary Limit		●		●	●						Check Blower Speed, Rotation, Belt, Pulleys, Duct Static, Filter	S16A,16D,200, 201,205,206,207
Improper Air Flow or Distribution				●	●					●	Check Blower Speed, Rotation, Belt, Pulleys, Duct Static, Filter	S16A,16D,200, 201,205,206,207
Faulty Blower Motor, Belt, or Pulley				●							Check Blower Speed, Rotation, Belt, Pulleys, Duct Static, Filter	S16A,16D,200, 201,205,206,207
Locking out on Main Limit			●		●					●	Check Limit, Gas Press., Temp. Rise, Blower Rotation, Belt, Pulleys, Duct Static, Filter	S-300, 307, 201
Delayed Ignition								●			Test for Delayed Ignition	S-308
Flashback								●			Test for Flashback	S-309
Orifice Size								●	●	●	Check Orifices	S-306
Gas Pressure		●						●	●	●	Check Gas Pressure	S-307
Cracked Heat Exchanger								●			Check Burner Flames	S-302
Stuck Gas Valve		●						●	●		Replace Gas Valve	S-304
Furnace Undersized										●	Replace with Proper Size Furnace	
Faulty Pressure Switch		●	●		●						Test Pressure Switch	S-310
Blocked or Restricted Flue								●			Check Flue/Drawdown Pressure	S-310
Open Roll Out Switch		●	●								Test Control	S-302
Bouncing On Pressure Switch			●								Test Negative Pressure, Flue Blockage	S-310

SERVICING

Table of Contents

S-1 Checking Voltage 40
S-2 Checking Wiring 40
S-3 Checking Thermostat, Wiring & Anticipator .. 41
S-3A Thermostat & Wiring 41
S-3B Cooling Anticipator 41
S-3C Heating Anticipator 41
S-4 Checking Transformer & Control Circuit 42
S-7 Checking Contactor and/or Relays 43
S-8 Checking Contactor Contacts 43
S-9 Checking Fan Relay Contact 44
S-11 Checking Loss of Charge Protection 44
S-12 Checking High Pressure Control 44
S-13 Checking Low Pressure Control 45
S-15 Checking Capacitor 45
S-15A Resistance Check 45
S-15B Capacitance Check 46
S-16 Checking Motors 46
S-16A Checking Fan & Blower Motor Windings (PSC Motors) 46
S-16D Checking EEM Motors 46
S-17 Checking Compressor Windings 47
S-17A Resistance Test 47
S-17B Ground Test 47
S-17D Operation Test 48
S-18 Testing Crankcase Heater (optional item) 48
S-18A Crankcase Heater Thermostat 48
S-21 Checking Reversing Valve & Solenoid 49
S-24 Testing Defrost Control 49
S-25 Testing Defrost Thermostat 49
S-50 Checking Heater Limit Control(s) 49
S-52 Checking Heater Elements 49
S-100 Refrigeration Repair Practice 50
S-101 Leak Testing 50
S-102 Evacuation 50
S-103 Charging 51
S-104 Checking Compressor Efficiency 52
S-106 Overfeeding 52
S-108 Checking Superheat 52
S-109 Checking Subcooling 55
S-110 Checking Expansion Valve Operation 55
S-111 Fixed Orifice Restriction Devices 55
S-112 Checking Restricted Liquid Line 55
S-113 Refrigerant Overcharge 56
S-114 Non-condensables 56
S-115 Compressor Burnout 56
S-200 Checking Extedrnal Static Pressure 57
S-201 Checking Temperature Rise 57
S-205 Checking Belt Tension 57
S-206 Indoor Fan Rotation Check 58
S-207 Variable Sheave Adjustment 58
S-300 Testing Primary Limit 59
S-301 Testing Auxiliary Limit 59
S-302 Checking Flame Rollout Switch 60
S-303 Testing Inducer Motor 61
S-304 Testing Gas Valve 61
S-305 Checking Main Burners 62
S-306 Checking Orifices 62
S-307 Checking Gas Pressure 63
S-308 Checking For Delayed Ignition 64
S-309 Checking for Flashback 64
S-310 Checking Pressure Control 64
S-311 High Altitude Application 65
S-313 Testing Ignition Control Module 65
S-314 Checking Flame Sensor 66

WARNING

HIGH VOLTAGE!
Disconnect ALL power before servicing or installing this unit. Multiple power sources may be present. Failure to do so may cause property damage, personal injury or death.

SERVICING

S-1 CHECKING VOLTAGE

WARNING

HIGH VOLTAGE!
Disconnect ALL power before servicing or installing this unit. Multiple power sources may be present. Failure to do so may cause property damage, personal injury or death.

1. Remove doors, control panel cover, etc. from unit being tested.

With power ON:

WARNING

Line Voltage now present.

2. Using a voltmeter, measure the voltage across terminals L1 and L2 of the contactor for single phase units, and L3, for 3 phase units.
3. No reading - indicates open wiring, open fuse(s) no power or etc. from unit to fused disconnect service. Repair as needed.
4. With ample voltage at line voltage connectors, energize the unit.
5. Measure the voltage with the unit starting and operating, and determine the unit Locked Rotor Voltage.

   Locked Rotor Voltage is the actual voltage available at the compressor during starting, locked rotor, or a stalled condition. Measured voltage should be above minimum listed in chart below.

   To measure Locked Rotor Voltage attach a voltmeter to the run "R" and common "C" terminals of the compressor, or to the T_1 and T_2 terminals of the contactor. Start the unit and allow the compressor to run for several seconds, then shut down the unit. Immediately attempt to restart the unit while measuring the Locked Rotor Voltage.
6. Voltmeter should read within the voltage tabulation as shown. If the voltage falls below the minimum voltage, check the line wire size. Long runs of undersized wire can cause low voltage. If wire size is adequate, notify the local power company in regards to either low or high voltage.

Unit Supply Voltage		
Voltage	Min.	Max.
208/230	198	253
460	437	506
575	546	604

Three phase units require a balanced 3 phase power supply to operate. If the percentage of voltage imbalance exceeds 3% the unit must not be operated until the voltage condition is corrected.

$$\text{\% Voltage Imbalance} = \frac{\text{Max. Voltage Deviation From Average Voltage}}{\text{Average Voltage}} \times 100$$

To find the percentage of imbalance, measure the incoming power supply.

L1 - L2 = 240V
L1 - L3 = 232V
L2 - L3 = 238V
Total 710V

$$\text{Avg. V} = \frac{710}{3} = \mathbf{236.7}$$

To find Max. deviation:
240 - 236.7 = +3.3
232 - 236.7 = **-4.7**
238 - 236.7 = +1.3

Max deviation was 4.7V

$$\text{\% Voltage Imbalance} = \frac{4.7}{236.7} = \mathbf{1.99\%}$$

If the percentage of imbalance had exceeded 3%, it must be determined if the imbalance is in the incoming power supply or the equipment. To do this rotate the legs of the incoming power and retest voltage as shown below.

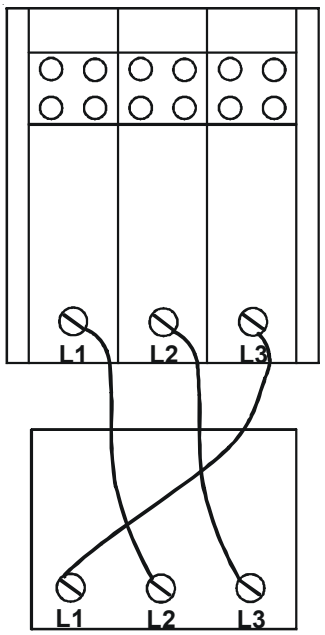

L1 - L2 = 240V
L1 - L3 = 227V
L2 - L3 = 238V

Rotate all 3 incoming legs as shown.

L1 - L2 = 227V
L1 - L3 = 238V
L2 - L3 = 240V

By the voltage readings we see that the imbalance rotated or traveled with the switching of the incoming legs. Therefore the imbalance lies within the incoming power supply.

If the imbalance had not changed then the problem would lie within the equipment. Check for current leakage, shorted motors, etc.

SERVICING

S-2 CHECKING WIRING

WARNING

HIGH VOLTAGE!
Disconnect ALL power before servicing or installing this unit. Multiple power sources may be present. Failure to do so may cause property damage, personal injury or death.

1. Check wiring visually for signs of overheating, damaged insulation and loose connections.
2. Use an ohmmeter to check continuity of any suspected open wires.
3. If any wires must be replaced, replace with comparable gauge and insulation thickness.

S-3 CHECKING THERMOSTAT, WIRING, AND ANTICIPATOR

THERMOSTAT WIRE SIZING CHART	
LENGTH OF RUN	MIN. COPPER WIRE GAUGE (AWG)
25 feet	18
50 feet	16
75 feet	14
100 feet	14
125 feet	12
150 feet	12

S-3A THERMOSTAT AND WIRING

WARNING

Line Voltage now present.

With power ON, thermostat calling for cooling

1. Use a voltmeter to check for 24 volts at thermostat wires C and Y in the unit control panel.
2. No voltage indicates trouble in the thermostat or wiring.
3. Check the continuity of the thermostat and wiring. Repair or replace as necessary.

Indoor Blower Motor

With power ON:

WARNING

Line Voltage now present.

1. Set fan selector switch at thermostat to "ON" position.
2. With voltmeter, check for 24 volts at wires C and G.
3. No voltage indicates the trouble is in the thermostat or wiring.
4. Check the continuity of the thermostat and wiring. Repair or replace as necessary.

S-3B COOLING ANTICIPATOR

The cooling anticipator is a small heater (resistor) in the thermostat. During the "off" cycle, it heats the bimetal element helping the thermostat call for the next cooling cycle. This prevents the room temperature from rising too high before the system is restarted. A properly sized anticipator should maintain room temperature within 1 1/2 to 2 degree range.

The anticipator is supplied in the thermostat and is not to be replaced. If the anticipator should fail for any reason, the thermostat must be changed.

S-3C HEATING ANTICIPATOR

The heating anticipator is a wire-wound adjustable heater, which is energized during the "ON" cycle to help prevent overheating of the conditioned space.

The anticipator is a part of the thermostat and if it should fail for any reason, the thermostat must be replaced. See the following for recommended heater anticipator setting.

To determine the proper setting, use an ammeter to measure the current on the "W" wire going to the thermostat.

Use an amprobe as shown below. Wrap 10 turns of thermostat wire around the stationary jaw of the amprobe and divide the reading by 10.

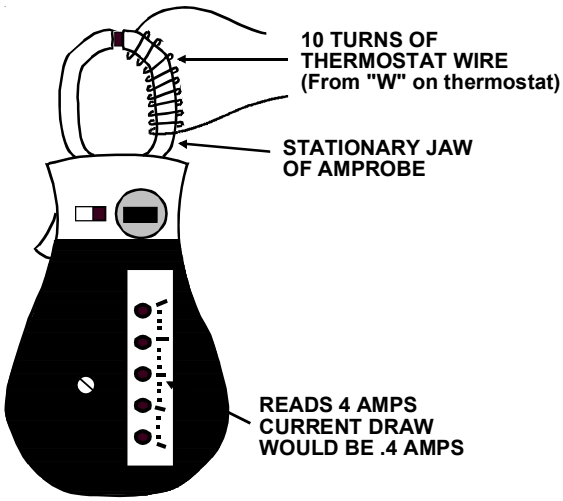

CHECKING HEAT ANTICIPATOR AMP DRAW

SERVICING

S-4 CHECKING TRANSFORMER AND CONTROL CIRCUIT

WARNING

HIGH VOLTAGE!
Disconnect ALL power before servicing or installing this unit. Multiple power sources may be present. Failure to do so may cause property damage, personal injury or death.

A step-down transformer (either 208-240, 460 or 575 volt primary to 24 volt secondary) is provided with each unit. This allows ample capacity for use with resistance heaters.

WARNING

Disconnect ALL power before servicing.

1. Remove control panel cover to gain access to transformer.

With power ON:

WARNING

Line Voltage now present.

2. Using a voltmeter, check voltage across secondary voltage side of transformer (R to C).
3. No voltage indicates faulty transformer, bad wiring, or bad splices.
4. Check transformer primary voltage at incoming line voltage connections and/or splices.
5 If line voltage available at primary voltage side of transformer and wiring and splices good, transformer is inoperative. Replace.

S-7 CHECKING CONTACTOR AND/OR RELAYS

WARNING

HIGH VOLTAGE!
Disconnect ALL power before servicing or installing this unit. Multiple power sources may be present. Failure to do so may cause property damage, personal injury or death.

The compressor contactor and other relay holding coils are wired into the low or line voltage circuits. When the control circuit is energized, the coil pulls in the normally open contacts or opens the normally closed contacts. When the coil is de-energized, springs return the contacts to their normal position.

NOTE: *Most single phase contactors break only one side of the line (L1), leaving 115 volts to ground present at most internal components.*

1. Remove the leads from the holding coil.
2. Using an ohmmeter, test across the coil terminals.

If the coil does not test continuous, replace the relay or contactor.

S-8 CHECKING CONTACTOR CONTACTS

SINGLE PHASE

WARNING

HIGH VOLTAGE!
Disconnect ALL power before servicing or installing this unit. Multiple power sources may be present. Failure to do so may cause property damage, personal injury or death.

1. Disconnect the wire leads from the terminal (T) side of the contactor.
2. With power ON, energize the contactor.

WARNING

Line Voltage now present.

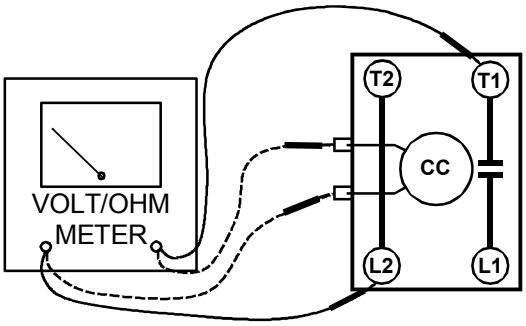

---- Ohmmeter for testing holding coil
—— Voltmeter for testing contacts

TESTING COMPRESSOR CONTACTOR (Single Phase)

3. Using a voltmeter, test across terminals.
   A. L1 - L2 - No voltage. Check breaker or fuses on main power supply.
   B. L2 - T1 - No voltage indicates CC1 contacts open.

If a no voltage reading is obtained - replace the contactor.

THREE PHASE

Using a voltmeter, test across terminals.

A. L1-L2, L1-L3, and L2-L3 - If voltage is present, proceed to B. If voltage is not present, check breaker or fuses on main power supply..

B. T1-T2, T1-T3, and T2-T3 - If voltage readings are not the same as in "A", replace contactor.

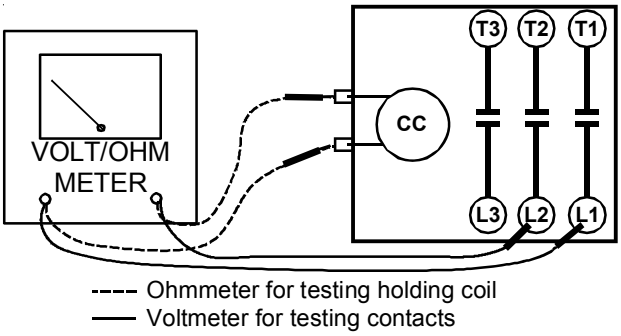

TESTING COMPRESSOR CONTACTOR (ThreePhase)

S-9 CHECKING FAN RELAY CONTACTS

CPG:

The fan relays are incorporated into the control board. See section S-313 for checking control board for single phase gas models.

For 3 phase and belt drive models, the procedure for testing the fan relay contacts will be the same as checking the compressor contactor contacts (See section S-8).

CPC/CPH:
The **E**lectronic **B**lower **T**ime **D**elay **R**elay is used on PSC and belt driven models.

WARNING

HIGH VOLTAGE!
Disconnect ALL power before servicing or installing this unit. Multiple power sources may be present. Failure to do so may cause property damage, personal injury or death.

Checking EBTDR High Voltage Contacts

1. With power off, remove wires from terminals NC, COM, and NO.
2. Using a VOM, check for resistance from NO to COM. Should read open. Next, check for resistance from NC to COM. Should read closed.
3. If not as above, replace EBTDR.

Checking EBTDR Contact Operation

With power on:

WARNING

Line Voltage now present.

1. Set the thermostat to the fan "on" position.
2. Check for 24 volts at the C and G terminals of the EBTDR.
3. If no voltage present, check fan circuit from thermostat. If 24 volts present, proceed to step 4.
4. Using a VOM, check for line voltage from the purple wire at the transformer (terminal 3 on 240 volt units, terminal 2 on 208 volt units) to terminal NO on the EBTDR. Should read line voltage. If no voltage present, check line voltage wiring in unit. If line voltage present, proceed to step 5.
5. Using a VOM, check for line voltage from the purple wire at the transformer (terminal 3 on 240 volt units, terminal 2 on 208 volt units) to the COM terminal on the EBTDR. Should read line voltage. If not as above, replace EBTDR.

PSC equipped, single phase model coolers and heat pumps have an isolation relay with a 240 volt holding coil in addition to the EBTDR.

WARNING

Disconnect ALL power before servicing.

Turn power off.

Testing relay holding coil

1. Remove the leads from the holding coil terminals 1 and 3.
2. Using an ohmmeter, test across the coil terminals 1 and 3. If the coil does not test continuous, replace the relay.

Testing relay contacts

WARNING

Disconnect ALL power before servicing.

Turn power off.

1. Using a VOM, test resistance across relay terminals 2 and 4. Should read open.
2. Turn power on.

WARNING

Line Voltage now present.

3. Apply 240 volts to coil terminals 1 and 3.
4. Using a VOM, check for 240 volts from terminals 3 and 1 of relay. Should read 240 volts. In no voltage, check wiring from heater kit to relay. If voltage present, proceed to step 5.

5. Using a VOM, check for 240 volts from L1 at contactor to terminal 4 of relay. Should read 240 volts. Next check from L1 at contactor to terminal 2 of relay. Should read 240 volts.

If not as above, replace relay.

On the 5 ton units with the EEM motor, a standard fan relay is used.

WARNING

Disconnect ALL power before servicing.

Turn power off.

Testing relay holding coil

1. Remove the leads from the holding coil.
2. Using an ohmmeter, test across the coil terminals 1 and 3. If the coil does not test continuous, replace the relay.

Testing relay contacts

WARNING

Disconnect ALL power before servicing.

Turn power off.

1. Using a VOM, test resistance across relay terminals 2 and 4. Should read open.
2. Turn power on.

WARNING

Line Voltage now present.

3. Apply 24 volts to coil terminals 1 and 3.
4. Using a VOM, check for 24 volts from terminals 3 and 2 of relay. Should read 24 volts. If no voltage, check low voltage wiring from transformer to relay. If voltage present, proceed to step 5.
5. Using a VOM, check for 24 volts from terminals 3 and 4 of relay. Should read 24 volts.

If not as above, replace relay.

S-11 CHECKING LOSS OF CHARGE PROTECTOR

(Heat Pump Models)

The loss of charge protector senses the pressure in the liquid line and will open its contacts on a drop in pressure. The low pressure control will automatically reset itself with a rise in pressure.

The low pressure control is designed to cut-out (open) at approximately 22 PSIG. It will automatically cut-in (close) at approximately 50 PSIG.

Test for continuity using a VOM and if not as above, replace the control.

S-12 CHECKING HIGH PRESSURE CONTROL

WARNING

HIGH VOLTAGE!
Disconnect ALL power before servicing or installing this unit. Multiple power sources may be present. Failure to do so may cause property damage, personal injury or death.

The high pressure control senses the pressure in the discharge line. If abnormally high discharge pressures develop, the contacts of the control open, breaking the control circuit before the compressor motor overloads. This control is automatically reset.

1. Using an ohmmeter, check across terminals of high pressure control, with wire removed. If not continuous, the contacts are open.
3. Attach a gauge to the access fitting on the liquid line.

With power ON:

WARNING

Line Voltage now present.

4. Start the system and place a piece of cardboard in front of the condenser coil, raising the condensing pressure.
5. Check pressure at which the high pressure control cuts-out.

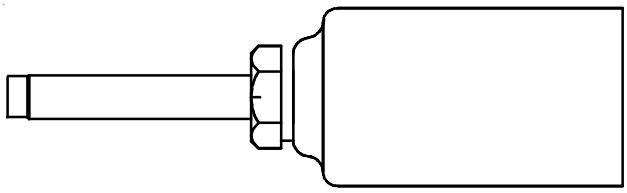

If it cuts-out at 660 PSIG ± 10 PSIG, it is operating normally (See causes for high head pressure in Service Problem Analysis Guide). If it cuts out below this pressure range, replace the control. The control should reset at 420 PSIG ± 25 PSIG.

SERVICING

S-13 CHECKING LOW PRESSURE CONTROL

The low pressure control senses the pressure in the suction line and will open its contacts on a drop in pressure. The low pressure control will automatically reset itself with a rise in pressure.

The low pressure control is designed to cut-out (open) at approximately 22 PSIG ± 7 PSIG. It will automatically cut-in (close) at approximately 50 PSIG ± 7 PSIG.

Test for continuity using a VOM and if not as above, replace the control.

S-15 CHECKING CAPACITOR

CAPACITOR, RUN

A run capacitor is wired across the auxiliary and main windings of a single phase permanent split capacitor motor. The capacitors primary function is to reduce the line current while greatly improving the torque characteristics of a motor. This is accomplished by using the 90° phase relationship between the capacitor current and voltage in conjunction with the motor windings so that the motor will give two phase operation when connected to a single phase circuit. The capacitor also reduces the line current to the motor by improving the power factor.

CAPACITOR, START

SCROLL COMPRESSOR MODELS

Hard start components are not required on Scroll compressor equipped units due to a non-replaceable check valve located in the discharge line of the compressor. However hard start kits are available and may improve low voltage starting characteristics.

This check valve closes off high side pressure to the compressor after shut down allowing equalization through the scroll flanks. Equalization requires only about one or two seconds during which time the compressor may turn backwards.

Your unit comes with a 180-second anti-short cycle to prevent the compressor from starting and running backwards.

MODELS EQUIPPED WITH A HARD START DEVICE

A start capacitor is wired in parallel with the run capacitor to increase the starting torque. The start capacitor is of the electrolytic type, rather than metallized polypropylene as used in the run capacitor.

A switching device must be wired in series with the capacitor to remove it from the electrical circuit after the compressor starts to run. Not removing the start capacitor will overheat the capacitor and burn out the compressor windings.

These capacitors have a 15,000 ohm, 2 watt resistor wired across its terminals. The object of the resistor is to discharge the capacitor under certain operating conditions, rather than having it discharge across the closing of the contacts within the switching device such as the Start Relay, and to reduce the chance of shock to the servicer. See the Servicing Section for specific information concerning capacitors.

RELAY, START

A potential or voltage type relay is used to take the start capacitor out of the circuit once the motor comes up to speed. This type of relay is position sensitive. The normally closed contacts are wired in series with the start capacitor and the relay holding coil is wired parallel with the start winding. As the motor starts and comes up to speed, the increase in voltage across the start winding will energize the start relay holding coil and open the contacts to the start capacitor.

Two quick ways to test a capacitor are a resistance and a capacitance check.

S-15A RESISTANCE CHECK

WARNING

HIGH VOLTAGE!
Disconnect ALL power before servicing or installing this unit. Multiple power sources may be present. Failure to do so may cause property damage, personal injury or death.

1. Discharge capacitor and remove wire leads.

WARNING

Discharge capacitor through a 20 to 30 OHM resistor before handling.

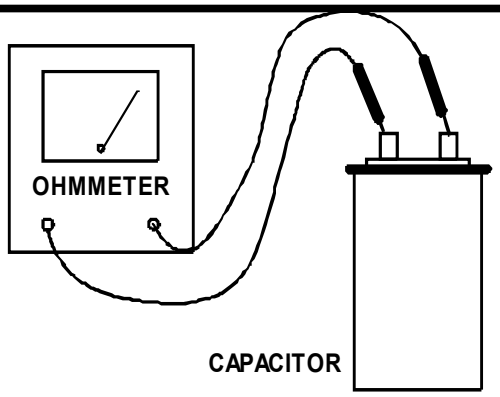

TESTING CAPACITOR RESISTANCE

2. Set an ohmmeter on its highest ohm scale and connect the leads to the capacitor -
   a. Good Condition - indicator swings to zero and slowly returns to infinity. (Start capacitor with bleed resistor will not return to infinity. It will still read the resistance of the resistor).
   b. Shorted - indicator swings to zero and stops there -replace.
   c. Open - no reading - replace. (Start capacitor would read resistor resistance.)

SERVICING

S-15B CAPACITANCE CHECK

Using a hookup as shown below, take the amperage and voltage readings and use them in the formula:

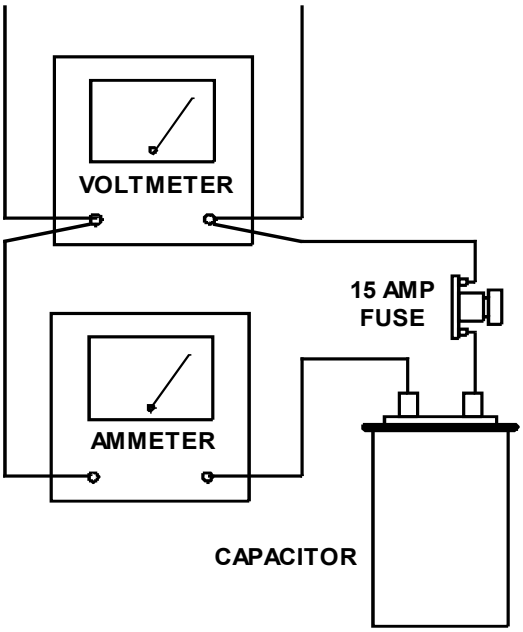

TESTING CAPACITANCE

WARNING

Discharge capacitor through a 20 to 30 OHM resistor before handling.

$$\text{Capacitance (MFD)} = \frac{2650 \times \text{Amperage}}{\text{Voltage}}$$

S-16 CHECKING MOTORS

S-16A CHECKING FAN AND BLOWER MOTOR WINDINGS (PSC MOTORS)

Applies only to units with PSC Motors

The auto reset fan motor overload is designed to protect the motor against high temperature and high amperage conditions by breaking the common circuit within the motor, similar to the compressor internal overload. However, heat generated within the motor is faster to dissipate than the compressor, allow at least 45 minutes for the overload to reset, then retest.

WARNING

HIGH VOLTAGE!
Disconnect ALL power before servicing or installing this unit. Multiple power sources may be present. Failure to do so may cause property damage, personal injury or death.

1. Remove the motor leads from its respective connection points and capacitor (if applicable).
2. Check the continuity between each of the motor leads.
3. Touch one probe of the ohmmeter to the motor frame (ground) and the other probe in turn to each lead.

If the windings do not test continuous or a reading is obtained from lead to ground, replace the motor.

S-16D CHECKING EEM (ENERGY EFFICIENT MOTOR) MOTORS

Applies only to units with EEM Motors

The EEM Motor is a one piece, fully encapsulated, 3 phase brushless DC (single phase AC input) motor with ball bearing construction. Unlike the ECM 2.3/2.5 motors, the EEM features an integral control module.

Note: The GE TECMate will not currently operate the GE EEM motor.

1. Using a voltmeter, check for 230 volts to the motor connections L and N. If 230 volts is present, proceed to step 2. If 230 volts is not present, check the line voltage circuit to the motor.
2. Using a voltmeter, check for 24 volts from terminal C to either terminal 1, 2, 3, 4, or 5, depending on which tap is being used, at the motor. If voltage present, proceed to step 3. If no voltage, check 24 volt circuit to motor.
3. If voltage was present in steps 1 and 2, the motor has failed and will need to be replaced.

Note: When replacing motor, ensure the belly band is between the vents on the motor and the wiring has the proper drip loop to prevent condensate from entering the motor.

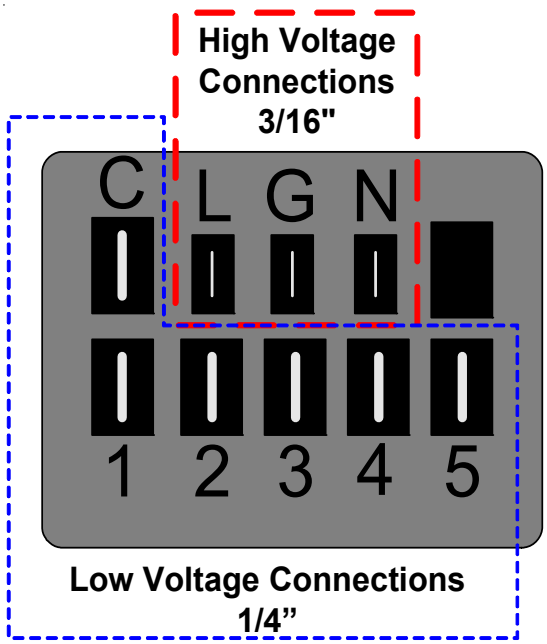

EEM MOTOR CONNECTIONS

SERVICING

S-17 CHECKING COMPRESSOR WINDINGS

WARNING

Hermetic compressor electrical terminal venting can be dangerous. When insulating material which supports a hermetic compressor or electrical terminal suddenly disintegrates due to physical abuse or as a result of an electrical short between the terminal and the compressor housing, the terminal may be expelled, venting the vapor and liquid contents of the compressor housing and system.

If the compressor terminal PROTECTIVE COVER and gasket (if required) are not properly in place and secured, there is a remote possibility if a terminal vents, that the vaporous and liquid discharge can be ignited, spouting flames several feet, causing potentially severe or fatal injury to anyone in its path.

This discharge can be ignited external to the compressor if the terminal cover is not properly in place and if the discharge impinges on a sufficient heat source.

Ignition of the discharge can also occur at the venting terminal or inside the compressor, if there is sufficient contaminant air present in the system and an electrical arc occurs as the terminal vents.

Ignition cannot occur at the venting terminal without the presence of contaminant air, and cannot occur externally from the venting terminal without the presence of an external ignition source.

Therefore, proper evacuation of a hermetic system is essential at the time of manufacture and during servicing.

To reduce the possibility of external ignition, all open flame, electrical power, and other heat sources should be extinguished or turned off prior to servicing a system.

S-17A RESISTANCE TEST

Each compressor is equipped with an internal overload.

The line break internal overload senses both motor amperage and winding temperature. High motor temperature or amperage heats the disc causing it to open, breaking the common circuit within the compressor on single phase units.

Heat generated within the compressor shell, usually due to recycling of the motor, high amperage or insufficient gas to cool the motor, is slow to dissipate. Allow at least three to four hours for it to cool and reset, then retest.

WARNING

HIGH VOLTAGE!
Disconnect ALL power before servicing or installing this unit. Multiple power sources may be present. Failure to do so may cause property damage, personal injury or death.

1. Remove the leads from the compressor terminals.

WARNING

See warnings S-17 before removing compressor terminal cover.

2. Using an ohmmeter, test continuity between terminals S-R, C-R, and C-S, on single phase units or terminals T1, T2 and T3, on 3 phase units.

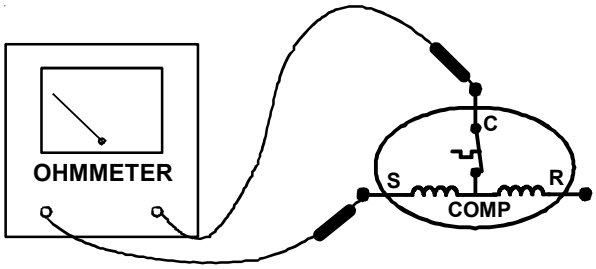

TESTING COMPRESSOR WINDINGS

If either winding does not test continuous, replace the compressor.

NOTE: If an open compressor is indicated, allow ample time for the internal overload to reset before replacing compressor.

S-17B GROUND TEST

If fuse, circuit breaker, ground fault protective device, etc., has tripped, this is a strong indication that an electrical problem exists and must be found and corrected. The circuit protective device rating must be checked, and its maximum rating should coincide with that marked on the equipment nameplate.

With the terminal protective cover in place, it is acceptable to replace the fuse or reset the circuit breaker ONE TIME ONLY to see if it was just a nuisance opening. If it opens again, DO NOT continue to reset.

WARNING

Disconnect ALL power before servicing.

Disconnect all power to unit, making sure that **all** power legs are open.

1. DO NOT remove protective terminal cover. Disconnect the three leads going to the compressor terminals at the nearest point to the compressor.
2. Identify the leads and using a Megger, Hi-Potential Ground Tester, or other suitable instrument which puts out a voltage between 300 and 1500 volts, check for a ground separately between each of the three leads and ground (such as an unpainted tube on the compressor). Do not use a low voltage output instrument such as a volt-ohmmeter.

SERVICING

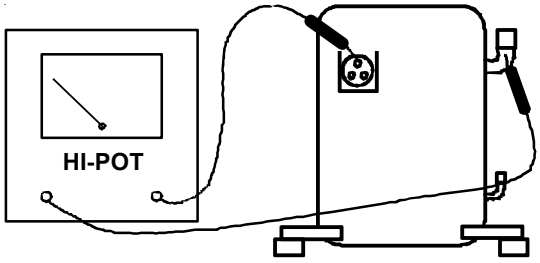

COMPRESSOR GROUND TEST

3. If a ground is indicated, then carefully remove the compressor terminal protective cover and inspect for loose leads or insulation breaks in the lead wires.
4. If no visual problems indicated, carefully remove the leads at the compressor terminals.

WARNING

Damage can occur to the glass embedded terminals if the leads are not properly removed. This can result in terminal and hot oil discharging.

Carefully retest for ground, directly between compressor terminals and ground.

5. If ground is indicated, replace the compressor.

S-17D OPERATION TEST

If the voltage, capacitor, overload and motor winding test fail to show the cause for failure:

WARNING

HIGH VOLTAGE!
Disconnect ALL power before servicing or installing this unit. Multiple power sources may be present. Failure to do so may cause property damage, personal injury or death.

1. Remove unit wiring from disconnect switch and wire a test cord to the disconnect switch.

NOTE: The wire size of the test cord must equal the line wire size and the fuse must be of the proper size and type.

2. With the protective terminal cover in place, use the three leads to the compressor terminals that were disconnected at the nearest point to the compressor and connect the common, start and run clips to the respective leads.
3. Connect good capacitors of the right MFD and voltage rating into the circuit as shown.
4. With power ON, close the switch.

WARNING

Line Voltage now present.

A. If the compressor starts and continues to run, the cause for failure is somewhere else in the system.

B. If the compressor fails to start - replace.

S-18 TESTING CRANKCASE HEATER (OPTIONAL ITEM)

Note: Not all compressors use crankcase heaters.
The crankcase heater must be energized a minimum of twenty-four (24) hours before the compressor is operated.

Crankcase heaters are used to prevent migration or accumulation of refrigerant in the compressor crankcase during the off cycles and prevents liquid slugging or oil pumping on start up. On some models, the crankcase heater is controlled by a crankcase heater thermostat that is wired in series with the crankcase heater.

A crankcase heater will not prevent compressor damage due to a floodback or over charge condition.

WARNING

Disconnect ALL power before servicing.

1. Disconnect the heater lead in wires.
2. Using an ohmmeter, check heater continuity - should test continuous. If not, replace.

S-18A CHECKING CRANKCASE HEATER THERMOSTAT

Note: Not all models with crankcase heaters will have a crankcase heater thermostat.

1. Install a thermocouple type temperature test lead on the discharge line adjacent to the crankcase heater thermostat.
2. Check the temperature at which the control closes its contacts by lowering the temperature of the control. The crankcase heater thermostat should close at 67°F ± 5°F.
3. Check the temperature at which the control opens its contacts by raising the temperature of the control. The crankcase heater thermostat should open at 85°F ± 5°F.
4. If not as above, replace control.

SERVICING

S-21 CHECKING REVERSING VALVE AND SOLENOID

Occasionally the reversing valve may stick in the heating or cooling position or in the mid-position.

When stuck in the mid-position, part of the discharge gas from the compressor is directed back to the suction side, resulting in excessively high suction pressure. An increase in the suction line temperature through the reversing valve can also be measured. Check operation of the valve by starting the system and switching the operation from COOLING to HEATING cycle.

If the valve fails to change its position, test the voltage (24V) at the valve coil terminals, while the system is on the COOLING cycle.

If no voltage is registered at the coil terminals, check the operation of the thermostat and the continuity of the connecting wiring from the "O" terminal of the thermostat to the unit.

If voltage is registered at the coil, tap the valve body lightly while switching the system from HEATING to COOLING, etc. If this fails to cause the valve to switch positions, remove the coil connector cap and test the continuity of the reversing valve solenoid coil. If the coil does not test continuous - replace it.

If the coil test continuous and 24 volts is present at the coil terminals, the valve is inoperative - replace it.

S-24 TESTING DEFROST CONTROL

To check the defrost control for proper sequencing, proceed as follows: With power ON; unit not running.

1. Jumper defrost thermostat by placing a jumper wire across the terminals "DFT" and "R" at defrost control board.
2. Connect jumper across test pins on defrost control board.
3. Set thermostat to call for heating. System should go into defrost within 21 seconds.
4. Immediately remove jumper from test pins.
5. Using VOM check for voltage across terminals "C & O". Meter should read 24 volts.
6. Using VOM check for voltage across fan terminals DF1 and DF2 on the board. You should read line voltage (208-230 VAC) indicating the relay is open in the defrost mode.
7. Using VOM check for voltage across "W2 & C" terminals on the board. You should read 24 volts.
8. If not as above, replace control board.
9. Set thermostat to off position and disconnect power before removing any jumpers or wires.

NOTE: Remove jumper across defrost thermostat before returning system to service.

S-25 TESTING DEFROST THERMOSTAT

1. Install a thermocouple type temperature test lead on the tube adjacent to the defrost control. Insulate the lead point of contact.
2. Check the temperature at which the control closes its contacts by lowering the temperature of the control. On 2 and 2.5 ton units, it should close at 34°F ± 5°F. On 3 thru 5 ton units, it should close at 31°F ± 3°F.
3. Check the temperature at which the control opens its contacts by raising the temperature of the control. On 2 and 2.5 ton units, it should open at 60°F ± 5°F. On 3 thru 5 ton units, it should open at 75°F ± 6°F.
4. If not as above, replace control.

S-50 CHECKING HEATER LIMIT CONTROL(S)

(OPTIONAL ELECTRIC HEATERS)

Each individual heater element is protected with an automatic rest limit control connected in series with each element to prevent overheating of components in case of low airflow. This limit control will open its circuit at approximately 150°F. to 160°F and close at approximately 110°F.

WARNING

Disconnect ALL power before servicing.

1. Remove the wiring from the control terminals.
2. Using an ohmmeter test for continuity across the normally closed contacts. No reading indicates the control is open - replace if necessary. Make sure the limits are cool before testing.

IF FOUND OPEN - REPLACE - DO NOT WIRE AROUND.

S-52 CHECKING HEATER ELEMENTS

Optional electric heaters may be added, in the quantities shown in the spec sheet for each model unit, to provide electric resistance heating. Under no condition shall more heaters than the quantity shown be installed.

WARNING

HIGH VOLTAGE!
Disconnect ALL power before servicing or installing this unit. Multiple power sources may be present. Failure to do so may cause property damage, personal injury or death.

1. Disassemble and remove the heating element(s).
2. Visually inspect the heater assembly for any breaks in the wire or broken insulators.

3. Using an ohmmeter, test the element for continuity - no reading indicates the element is open. Replace as necessary.

To obtain the amount of subcooling subtract 109°F from 120°F.

The difference is 11° subcooling. See the specification sheet or technical information manual for the design subcooling range for your unit.

S-100 REFRIGERATION REPAIR PRACTICE

DANGER

Always remove the refrigerant charge in a proper manner before applying heat to the system.

When repairing the refrigeration system:

WARNING

Disconnect ALL power before servicing.

1. Never open a system that is under vacuum. Air and moisture will be drawn in.
2. Plug or cap all openings.
3. Remove all burrs and clean the brazing surfaces of the tubing with sand cloth or paper. Brazing materials do not flow well on oxidized or oily surfaces.
4. Clean the inside of all new tubing to remove oils and pipe chips.
5. When brazing, sweep the tubing with dry nitrogen to prevent the formation of oxides on the inside surfaces.
6. Complete any repair by replacing the liquid line drier in the system, evacuate and charge.

BRAZING MATERIALS

Copper to Copper Joints - Sil-Fos used without flux (alloy of 15% silver, 80% copper, and 5% phosphorous). Recommended heat 1400°F.

Copper to Steel Joints - Silver Solder used without a flux (alloy of 30% silver, 38% copper, 32% zinc). Recommended heat - 1200°F.

S-101 LEAK TESTING

(NITROGEN OR NITROGEN-TRACED)

WARNING

To avoid the risk of fire or explosion, never use oxygen, high pressure air or flammable gases for leak testing of a refrigeration system.

WARNING

To avoid possible explosion, the line from the nitrogen cylinder must include a pressure regulator and a pressure relief valve. The pressure relief valve must be set to open at no more than 150 psig.

Pressure test the system using dry nitrogen and soapy water to locate leaks. If you wish to use a leak detector, charge the system to 10 psi using the appropriate refrigerant then use nitrogen to finish charging the system to working pressure, then apply the detector to suspect areas. If leaks are found, repair them. After repair, repeat the pressure test. If no leaks exist, proceed to system evacuation.

S-102 EVACUATION

WARNING

REFRIGERANT UNDER PRESSURE!
Failure to follow proper procedures may cause property damage, personal injury or death.

This is the most important part of the entire service procedure. The life and efficiency of the equipment is dependent upon the thoroughness exercised by the serviceman when evacuating air (non-condensables) and moisture from the system.

Air in a system causes high condensing temperature and pressure, resulting in increased power input and reduced performance.

Moisture chemically reacts with the refrigerant oil to form corrosive acids. These acids attack motor windings and parts, causing breakdown.

The equipment required to thoroughly evacuate the system is a high vacuum pump, capable of producing a vacuum equivalent to 25 microns absolute and a thermocouple vacuum gauge to give a true reading of the vacuum in the system

NOTE: Never use the system compressor as a vacuum pump or run when under a high vacuum. Motor damage could occur.

WARNING

Do not front seat the service valve(s) with the compressor open, with the suction line of the comprssor closed or severely restricted.

1. Connect the vacuum pump, vacuum tight manifold set with high vacuum hoses, thermocouple vacuum gauge and charging cylinder as shown.

2. Start the vacuum pump and open the shut off valve to the high vacuum gauge manifold only. After the compound gauge (low side) has dropped to approximately 29 inches of vacuum, open the valve to the vacuum thermocouple gauge. See that the vacuum pump will blank-off to a maximum of 25 microns. A high vacuum pump can only produce a good vacuum if its oil is non-contaminated.

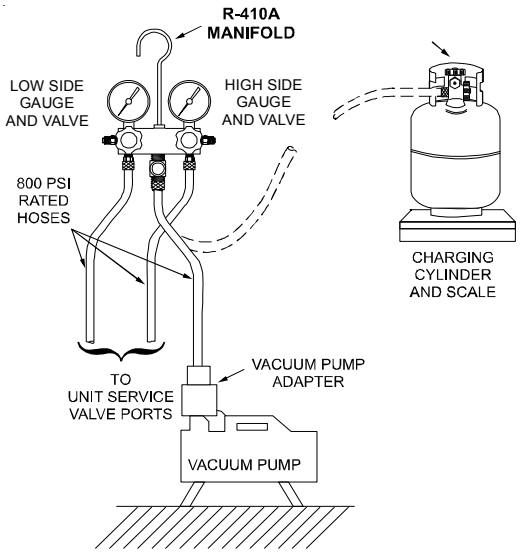

EVACUATION

3. If the vacuum pump is working properly, close the valve to the vacuum thermocouple gauge and open the high and low side valves to the high vacuum manifold set. With the valve on the charging cylinder closed, open the manifold valve to the cylinder.
4. Evacuate the system to at least 29 inches gauge before opening valve to thermocouple vacuum gauge.
5. Continue to evacuate to a maximum of 250 microns. Close valve to vacuum pump and watch rate of rise. If vacuum does not rise above 1500 microns in three to five minutes, system can be considered properly evacuated.
6. If thermocouple vacuum gauge continues to rise and levels off at about 5000 microns, moisture and non-condensables are still present. If gauge continues to rise a leak is present. Repair and re-evacuate.
7. Close valve to thermocouple vacuum gauge and vacuum pump. Shut off pump and prepare to charge.

S-103 CHARGING

WARNING

REFRIGERANT UNDER PRESSURE!
*** Do not overcharge system with refrigerant.**
*** Do not operate unit in a vacuum or at negative pressure.**
Failure to follow proper procedures may cause property damage, personal injury or death.

CAUTION

Use refrigerant certified to AHRI standards. Used refrigerant may cause compressor damage and will void the warranty. Most portable machines cannot clean used refrigerant to meet AHRI standards.

CAUTION

Operating the compressor with the suction valve closed will void the warranty and cause serious compressor damage.

Charge the system with the exact amount of refrigerant.

Refer to the specification section or check the unit nameplates for the correct refrigerant charge.

An inaccurately charged system will cause future problems.

1. Using a quality set of charging scales, weigh the proper amount of refrigerant for the system. Allow liquid refrigerant only to enter the high side.
2. After the system will take all it will take, close the valve on the high side of the charging manifold.
3. Start the system and charge the balance of the refrigerant through the low side.

NOTE: R410A should be drawn out of the storage container or drum in liquid form due to its fractionation properties, but should be "Flashed" to its gas state before entering the system. There are commercially available restriction devices that fit into the system charging hose set to accomplish this. **DO NOT** charge liquid R410A into the compressor.

4. With the system still running, close the valve on the charging cylinder. At this time, you may still have some liquid refrigerant in the charging cylinder hose and will definitely have liquid in the liquid hose. Reseat the liquid line core. Slowly open the high side manifold valve and transfer the liquid refrigerant from the liquid line hose and charging cylinder hose into the suction service valve port. CAREFUL: Watch so that liquid refrigerant does not enter the compressor.

Final Charge Adjustment

The outdoor temperature must be 60°F or higher. Set the room thermostat to COOL, fan switch to AUTO, and set the temperature control well below room temperature.

After system has stabilized per startup instructions, compare the operating pressures and outdoor unit amp draw to the numbers listed in the technical manual. If pressures and amp draw are too low, add charge. If pressures and amp draw are too high, remove charge. Check subcooling and superheat as detailed in the following section.

5. With the system still running, remove hose and reinstall both valve caps.
6. Check system for leaks.

SERVICING

Due to their design, Scroll compressors are inherently more tolerant of liquid refrigerant.

NOTE: *Even though the compressor section of a Scroll compressor is more tolerant of liquid refrigerant, continued floodback or flooded start conditions may wash oil from the bearing surfaces causing premature bearing failure.*S-104 CHECKING COMPRESSOR EFFICIENCY

The reason for compressor inefficiency is broken or damaged suction and/or discharge valves, or scroll flanks on Scroll compressors, reducing the ability of the compressor to pump refrigerant vapor.

The condition of the valves or scroll flanks is checked in the following manner.

1. Attach gauges to the high and low side of the system.
2. Start the system and run a Cooling Performance Test.

If the test shows-

⇒ Below normal high side pressure.

⇒ Above normal low side pressure.

⇒ Low temperature difference across coil.

⇒ Low amp draw at compressor.

-and the charge is correct. The compressor is faulty - replace the compressor.

S-104 CHECKING COMPRESSOR EFFICIENCY

The reason for compressor inefficiency is broken or damaged scroll flanks on Scroll compressors, reducing the ability of the compressor to pump refrigerant vapor.

During the "OFF" cycle, the high side pressure bleeds to the low side through the fixed orifice restriction device. Check equalization time as follows:

1. Attach a gauge manifold to the suction and liquid line dill valves.
2. Start the system and allow the pressures to stabilize.
3. Stop the system and check the time it takes for the high and low pressure gauge readings to equalize.

If it takes more than seven (7) minutes to equalize, the restrictor device is inoperative. Replace, install a liquid line drier, evacuate and recharge.

S-106 OVERFEEDING

Overfeeding by the expansion valve results in high suction pressure, cold suction line, and possible liquid slugging of the compressor.

If these symptoms are observed:

1. Check for an overcharged unit by referring to the cooling performance charts in the technical manual.
2. Check the operation of the power element in the valve as explained in S-110 Checking Expansion Valve Operation.
3. Check for restricted or plugged equalizer tube.

S-108 SUPERHEAT

CHECKING SUPERHEAT

Refrigerant gas is considered superheated when its temperature is higher than the saturation temperature corresponding to its pressure. The degree of superheat equals the degrees of temperature increase above the saturation temperature at existing pressure. See Temperature - Pressure Chart .

CAUTION

To prevent personal injury, carefully connect and disconnect manifold gauge hoses. Escaping liquid refrigerant can cause burns. Do not vent refrigerant to atmosphere. Recover during system repair or final unit disposal.

1. Run system at least 10 minutes to allow pressure to stabilize.
2. Temporarily install thermometer on suction (large) line near compressor with adequate contact and insulate for best possible reading.
3. Refer to the superheat table provided for proper system superheat. Add charge to lower superheat or recover charge to raise superheat.

Superheat Formula = Suct. Line Temp. - Sat. Suct. Temp.

Ambient Condenser Inlet Temp (°F Drybulb)	Return Air Temp. (°F Drybulb)				
	65	70	75	80	85
100	---	---	---	10	10
95	---	---	10	10	10
90	---	---	12	15	18
85	---	10	13	17	20
80	---	10	15	21	26
75	10	13	17	25	29
70	10	17	20	28	32
65	13	19	26	32	35
60	17	25	30	33	37

SYSTEM SUPERHEAT

EXAMPLE:

a. Suction Pressure = 143

b. Corresponding Temp. °F. = 50

c. Thermometer on Suction Line = 59°F.

To obtain the degrees temperature of superheat, subtract 50.0 from 59.0°F.

The difference is 9° Superheat. The 9° Superheat would fall in the ± range of allowable superheat.

SERVICING

Pressure vs. Temperature Chart													
R-410A													
PSIG	°F	PSIG	°F	PSIG	°F	PSIG	°F	PSIG	°F	PSIG	°F
12	-37.7	114.0	37.8	216.0	74.3	318.0	100.2	420.0	120.7	522.0	137.6
14	-34.7	116.0	38.7	218.0	74.9	320.0	100.7	422.0	121.0	524.0	137.9
16	-32.0	118.0	39.5	220.0	75.5	322.0	101.1	424.0	121.4	526.0	138.3
18	-29.4	120.0	40.5	222.0	76.1	324.0	101.6	426.0	121.7	528.0	138.6
20	-36.9	122.0	41.3	224.0	76.7	326.0	102.0	428.0	122.1	530.0	138.9
22	-24.5	124.0	42.2	226.0	77.2	328.0	102.4	430.0	122.5	532.0	139.2
24	-22.2	126.0	43.0	228.0	77.8	330.0	102.9	432.0	122.8	534.0	139.5
26	-20.0	128.0	43.8	230.0	78.4	332.0	103.3	434.0	123.2	536.0	139.8
28	-17.9	130.0	44.7	232.0	78.9	334.0	103.7	436.0	123.5	538.0	140.1
30	-15.8	132.0	45.5	234.0	79.5	336.0	104.2	438.0	123.9	540.0	140.4
32	-13.8	134.0	46.3	236.0	80.0	338.0	104.6	440.0	124.2	544.0	141.0
34	-11.9	136.0	47.1	238.0	80.6	340.0	105.1	442.0	124.6	548.0	141.6
36	-10.1	138.0	47.9	240.0	81.1	342.0	105.4	444.0	124.9	552.0	142.1
38	-8.3	140.0	48.7	242.0	81.6	344.0	105.8	446.0	125.3	556.0	142.7
40	-6.5	142.0	49.5	244.0	82.2	346.0	106.3	448.0	125.6	560.0	143.3
42	-4.5	144.0	50.3	246.0	82.7	348.0	106.6	450.0	126.0	564.0	143.9
44	-3.2	146.0	51.1	248.0	83.3	350.0	107.1	452.0	126.3	568.0	144.5
46	-1.6	148.0	51.8	250.0	83.8	352.0	107.5	454.0	126.6	572.0	145.0
48	0.0	150.0	52.5	252.0	84.3	354.0	107.9	456.0	127.0	576.0	145.6
50	1.5	152.0	53.3	254.0	84.8	356.0	108.3	458.0	127.3	580.0	146.2
52	3.0	154.0	54.0	256.0	85.4	358.0	108.8	460.0	127.7	584.0	146.7
54	4.5	156.0	54.8	258.0	85.9	360.0	109.2	462.0	128.0	588.0	147.3
56	5.9	158.0	55.5	260.0	86.4	362.0	109.6	464.0	128.3	592.0	147.9
58	7.3	160.0	56.2	262.0	86.9	364.0	110.0	466.0	128.7	596.0	148.4
60	8.6	162.0	57.0	264.0	87.4	366.0	110.4	468.0	129.0	600.0	149.0
62	10.0	164.0	57.7	266.0	87.9	368.0	110.8	470.0	129.3	604.0	149.5
64	11.3	166.0	58.4	268.0	88.4	370.0	111.2	472.0	129.7	608.0	150.1
66	12.6	168.0	59.0	270.0	88.9	372.0	111.6	474.0	130.0	612.0	150.6
68	13.8	170.0	59.8	272.0	89.4	374.0	112.0	476.0	130.3	616.0	151.2
70	15.1	172.0	60.5	274.0	89.9	376.0	112.4	478.0	130.7	620.0	151.7
72	16.3	174.0	61.1	276.0	90.4	378.0	112.6	480.0	131.0	624.0	152.3
74	17.5	176.0	61.8	278.0	90.9	380.0	113.1	482.0	131.3	628.0	152.8
76	18.7	178.0	62.5	280.0	91.4	382.0	113.5	484.0	131.6	632.0	153.4
78	19.8	180.0	63.1	282.0	91.9	384.0	113.9	486.0	132.0	636.0	153.9
80	21.0	182.0	63.8	284.0	92.4	386.0	114.3	488.0	132.3	640.0	154.5
82	22.1	184.0	64.5	286.0	92.8	388.0	114.7	490.0	132.6	644.0	155.0
84	23.2	186.0	65.1	288.0	93.3	390.0	115.0	492.0	132.9	648.0	155.5
86	24.3	188.0	65.8	290.0	93.8	392.0	115.5	494.0	133.3	652.0	156.1
88	25.4	190.0	66.4	292.0	94.3	394.0	115.8	496.0	133.6	656.0	156.6
90	26.4	192.0	67.0	294.0	94.8	396.0	116.2	498.0	133.9	660.0	157.1
92	27.4	194.0	67.7	296.0	95.2	398.0	116.6	500.0	134.0	664.0	157.7
94	28.5	196.0	68.3	298.0	95.7	400.0	117.0	502.0	134.5	668.0	158.2
96	29.5	198.0	68.9	300.0	96.2	402.0	117.3	504.0	134.8	672.0	158.7
98	30.5	200.0	69.5	302.0	96.6	404.0	117.7	506.0	135.2	676.0	159.2
100	31.2	202.0	70.1	304.0	97.1	406.0	118.1	508.0	135.5	680.0	159.8
102	32.2	204.0	70.7	306.0	97.5	408.0	118.5	510.0	135.8	684.0	160.3
104	33.2	206.0	71.4	308.0	98.0	410.0	118.8	512.0	136.1	688.0	160.8
106	34.1	208.0	72.0	310.0	98.4	412.0	119.2	514.0	136.4	692.0	161.3
108	35.1	210.0	72.6	312.0	98.9	414.0	119.6	516.0	136.7	696.0	161.8
110	35.5	212.0	73.2	314.0	99.3	416.0	119.9	518.0	137.0		
112	36.9	214.0	73.8	316.0	99.7	418.0	120.3	520.0	137.3		

*Based on ALLIED SIGNAL Data

REQUIRED LIQUID LINE TEMPERATURE						
LIQUID PRESSURE AT ACCESS FITTING (PSIG)	REQUIRED SUBCOOLING TEMPERATURE (°F)					
	8	10	12	14	16	18
189	58	56	54	52	50	48
195	60	58	56	54	52	50
202	62	60	58	56	54	52
208	64	62	60	58	56	54
215	66	64	62	60	58	56
222	68	66	64	62	60	58
229	70	68	66	64	62	60
236	72	70	68	66	64	62
243	74	72	70	68	66	64
251	76	74	72	70	68	66
259	78	76	74	72	70	68
266	80	78	76	74	72	70
274	82	80	78	76	74	72
283	84	82	80	78	76	74
291	86	84	82	80	78	76
299	88	86	84	82	80	78
308	90	88	86	84	82	80
317	92	90	88	86	84	82
326	94	92	90	88	86	84
335	96	94	92	90	88	86
345	98	96	94	92	90	88
354	100	98	96	94	92	90
364	102	100	98	96	94	92
374	104	102	100	98	96	94
384	106	104	102	100	98	96
395	108	106	104	102	100	98
406	110	108	106	104	102	100
416	112	110	108	106	104	102
427	114	112	110	108	106	104
439	116	114	112	110	108	106
450	118	116	114	112	110	108
462	120	118	116	114	112	110
474	122	120	118	116	114	112
486	124	122	120	118	116	114
499	126	124	122	120	118	116
511	128	126	124	122	120	118

SERVICING

S-109 CHECKING SUBCOOLING

Refrigerant liquid is considered subcooled when its temperature is lower than the saturation temperature corresponding to its pressure. The degree of subcooling equals the degrees of temperature decrease below the saturation temperature at the existing pressure.

1. Attach an accurate thermometer or preferably a thermocouple type temperature tester to the liquid line close to the pressure switch.
2. Install a high side pressure gauge on the high side (liquid) service valve at the front of the unit.
3. Record the gauge pressure and the temperature of the line.
4. Compare the hi-pressure reading to the "Required Liquid Line Temperature" chart on the preceding page. Find the hi-pressure value on the left column. Follow that line right to the column under the design subcooling value. Where the two intersect is the required liquid line temperature.

   Alternately you can convert the liquid line pressure gauge reading to temperature by finding the gauge reading in Temperature - Pressure Chart and reading to the left, find the temperature in the °F. Column.
5. The difference between the thermometer reading and pressure to temperature conversion is the amount of subcooling.

Add charge to raise subcooling. Recover charge to lower subcooling.

Subcooling Formula = Sat. Liquid Temp. - Liquid Line Temp.

EXAMPLE:

a. Liquid Line Pressure = 417
b. Corresponding Temp. °F. = 120°
c. Thermometer on Liquid line = 109°F.

To obtain the amount of subcooling, subtract 109°F from 120°F.

The difference is 11° subcooling. See the specification sheet or technical information manual for the design subcooling range for your unit.

See R410A Pressure vs. Temperature chart.

S-110 CHECKING EXPANSION VALVE OPERATION

1. Remove the remote bulb of the expansion valve from the suction line.
2. Start the system and cool the bulb in a container of ice water, closing the valve. As you cool the bulb, the suction pressure should fall and the suction temperature will rise.
3. Next warm the bulb in your hand. As you warm the bulb, the suction pressure should rise and the suction temperature will fall.
4. If a temperature or pressure change is noticed, the expansion valve is operating. If no change is noticed, the valve is restricted, the power element is faulty, or the equalizer tube is plugged.
5. Capture the charge, replace the valve and drier, evacuate and recharge.

S-111 FIXED ORIFICE RESTRICTION DEVICES

The fixed orifice restriction device (flowrator) used in conjunction with the indoor coil is a predetermined bore (I.D.).

It is designed to control the rate of liquid refrigerant flow into an evaporator coil.

The amount of refrigerant that flows through the fixed orifice restriction device is regulated by the pressure difference between the high and low sides of the system.

In the cooling cycle when the outdoor air temperature rises, the high side condensing pressure rises. At the same time, the cooling load on the indoor coil increases, causing the low side pressure to rise, but at a slower rate.

Since the high side pressure rises faster when the temperature increases, more refrigerant flows to the evaporator, increasing the cooling capacity of the system.

When the outdoor temperature falls, the reverse takes place. The condensing pressure falls, and the cooling loads on the indoor coil decreases, causing less refrigerant flow.

If a restriction should become evident, proceed as follows:

1. Recover refrigerant charge.
2. Remove the orifice assembly and clean or replace.
3. Replace liquid line drier, evacuate and recharge.

CHECKING EQUALIZATION TIME

During the "OFF" cycle, the high side pressure bleeds to the low side through the fixed orifice restriction device. Check equalization time as follows:

1. Attach a gauge manifold to the suction and liquid line dill valves
2. Start the system and allow the pressures to stabilize.
3. Stop the system and check the time it takes for the high and low pressure gauge readings to equalize.

If it takes more than seven (7) minutes to equalize, the restriction device is inoperative. Replace, install a liquid line drier, evacuate and recharge.

S-112 CHECKING RESTRICTED LIQUID LINE

When the system is operating, the liquid line is warm to the touch. If the liquid line is restricted, a definite temperature drop will be noticed at the point of restriction. In severe cases, frost will form at the restriction and extend down the line in the direction of the flow.

Discharge and suction pressures will be low, giving the appearance of an undercharged unit. However, the unit will have normal to high subcooling.

Locate the restriction, replace the restricted part, replace drier, evacuate and recharge.

S-113 OVERCHARGE OF REFRIGERANT

An overcharge of refrigerant is normally indicated by an excessively high head pressure.

An evaporator coil, using an expansion valve metering device, will basically modulate and control a flooded evaporator and prevent liquid return to the compressor.

An evaporator coil, using a fixed orifice restrictor device (flowrator) metering device, could allow refrigerant to return to the compressor under extreme overcharge conditions.

Also with a fixed orifice restrictor device (flowrator) metering device, extreme cases of insufficient indoor air can cause icing of the indoor coil and liquid return to the compressor, but the head pressure would be lower.

There are other causes for high head pressure which may be found in the "Service Problem Analysis Guide."

If other causes check out normal, an overcharge or a system containing non-condensables would be indicated.

If this system is observed:

1. Start the system.
2. Remove and capture small quantities of refrigerant as from the suction line access fitting until the head pressure is reduced to normal.
3. Observe the system while running a cooling performance test. If a shortage of refrigerant is indicated, then the system contains non-condensables.

S-114 NON-CONDENSABLES

If non-condensables are suspected, shut down the system and allow the pressures to equalize. Wait at least 15 minutes. Compare the pressure to the temperature of the coldest coil since this is where most of the refrigerant will be. If the pressure indicates a higher temperature than that of the coil temperature, non-condensables are present.

Non-condensables are removed from the system by first removing the refrigerant charge, replacing and/or installing liquid line drier, evacuating and recharging.

S-115 COMPRESSOR BURNOUT

When a compressor burns out, high temperature develops causing the refrigerant, oil and motor insulation to decompose forming acids and sludge.

If a compressor is suspected of being burned-out, attach a refrigerant hose to the liquid line dill valve and properly remove and dispose of the refrigerant.

NOTICE

Violation of EPA regulations may result in fines or other penalties.

Now determine if a burn out has actually occurred. Confirm by analyzing an oil sample using a Sporlan Acid Test Kit, AK-3 or its equivalent.

Remove the compressor and obtain an oil sample from the suction stub. If the oil is not acidic, either a burnout has not occurred or the burnout is so mild that a complete clean-up is not necessary.

If acid level is unacceptable, the system must be cleaned by using the clean-up drier method.

CAUTION

Do not allow the sludge or oil to contact the skin. Severe burns may result.

NOTE: Goodman does **NOT** approve the flushing method using R-11 refrigerant.

Suction Line Drier Clean-Up Method

The POE oils used with R410A refrigerant is an excellent solvent. In the case of a burnout, the POE oils will remove any burnout residue left in the system. If not captured by the refrigerant filter, they will collect in the compressor or other system components, causing a failure of the replacement compressor and/or spread contaminants throughout the system, damaging additional components.

Use part number RF000127 suction line filter drier kit. This drier should be installed as close to the compressor suction fitting as possible. The filter must be accessible and be rechecked for a pressure drop after the system has operated for a time. It may be necessary to use new tubing and form as required.

NOTE: At least twelve (12) inches of the suction line immediately out of the compressor stub must be discarded due to burned residue and contaminates.

1. Remove the liquid line drier and expansion valve.
2. Purge all remaining components with dry nitrogen or carbon dioxide until clean.
3 Install new components **including** liquid line drier.
4. Braze all joints, leak test, evacuate, and recharge system.
5. Start up the unit and record the pressure drop across the drier.
6. Continue to run the system for a minimum of twelve (12) hours and recheck the pressure drop across the drier. Pressure drop should not exceed 6 PSIG.
7. Continue to run the system for several days, repeatedly checking pressure drop across the suction line drier. If the pressure drop never exceeds the 6 PSIG, the drier has trapped the contaminants. Remove the suction line drier from the system.
8. If the pressure drop becomes greater, then it must be replaced and steps 5 through 9 repeated until it does not exceed 6 PSIG.

NOTICE: Regardless, the cause for burnout must be determined and corrected before the new compressor is started.

SERVICING

S-200 CHECKING EXTERNAL STATIC PRESSURE

The minimum and maximum allowable duct static pressure is found in the Technical Information Manual.

Too great of an external static pressure will result in insufficient air that can cause icing of the coil, whereas too much air can cause poor humidity control, and condensate to be pulled off the evaporator coil causing condensate leakage. Too much air can cause motor overloading and in many cases this constitutes a poorly designed system. To determine proper air movement, proceed as follows:

1. Using a draft gauge (inclined manometer) measure the static pressure of the return duct at the inlet of the unit, (Negative Pressure).

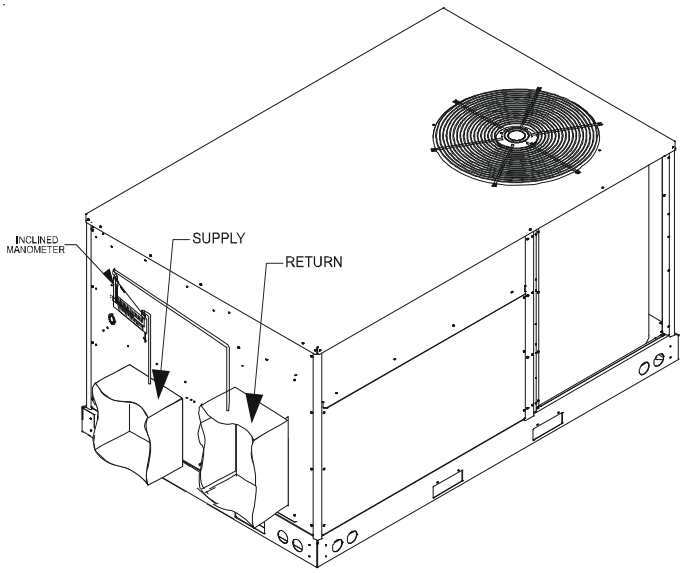

TOTAL EXTERNAL STATIC

2. Measure the static pressure of the supply duct, (Positive Pressure).
3. Add the two readings together.

NOTE: Both readings may be taken simultaneously and read directly on the manometer if so desired.

4. Consult proper table for quantity of air.

If the external static pressure exceeds the minimum or maximum allowable statics, check for closed dampers, dirty filters, undersized or poorly laid out ductwork.

S-201 CHECKING TEMPERATURE RISE

Temperature rise is related to the BTUH output of the unit and the amount of air (CFM) circulated over the heat exchanger.

All units are designed for a given range of temperature increase. This is the temperature of the air leaving the unit minus the temperature of the air entering the unit.

The more air (CFM) being delivered through a given unit the less the rise will be; so the less air (CFM) being delivered, the greater the rise. The temperature rise should be adjusted in accordance to a given unit specifications and its external static pressure.

1. Check BTUH input to unit do not exceed input rating stamped on rating plate.
2. Take entering and leaving air temperatures.
3. Select the proper speed tap or dip switch setting for direct drive units.
4. For gas heat units, the airflow must be adjusted so that the air temperature rise falls within the ranges given stated on Data Plate by adjusting the variable pitch sheave on the motor (see Blower Performance section in appropriate Technical Manual for correct pulley adjustment).
5. Take motor amperage draw to determine that the motor is not overloaded during adjustments.

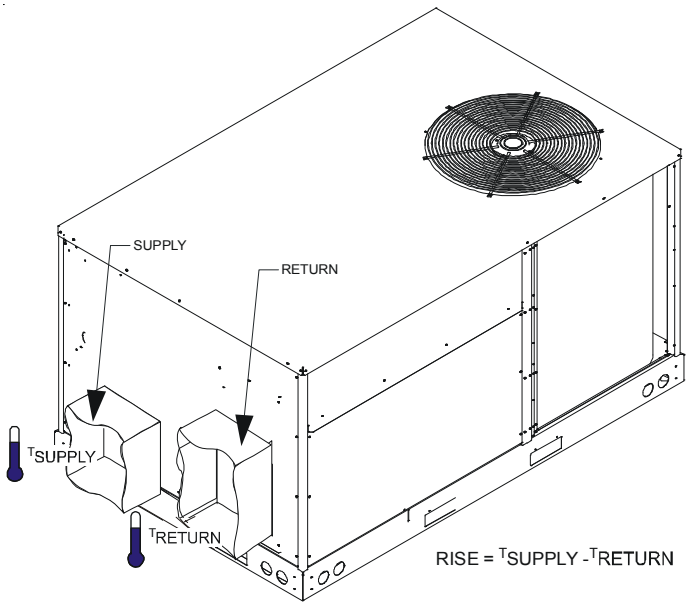

CHECKING TEMPERATURE RISE

S-205 CHECKING BELT TENSION

NOTE: Section on high static tables may require a field motor change.

BELT DRIVE MODELS ONLY

Tension and Alignment Adjustment

Check drive for adequate run-in belt tension. Correct belt tension is very important. A belt that is loose will have a substantially shorter life, and a belt that is too tight may cause premature motor and bearing failure. Correct belt

tension on these units can be checked by measuring the force required to deflect the belt 1/8" at the midpoint of the span length (See DRIVE BELT TENSION ADJUSTMENT Figure). Belt tension force can be measured using a belt tension gauge, available through most belt manufacturers. The correct deflection force is 5 lbs. for a new belt and 3.5 lbs. for a belt that has been run in. New belt tension includes initial belt stretch.

When new V-belts are installed on a drive, the initial tension will drop rapidly during the first few hours. Check tension frequently during the first 24 hours of operation. Subsequent retensioning should fall between the minimum and maximum force. To determine the deflection distance from the normal position, use a straightedge or stretch a cord from sheave to sheave to use as a reference line. On multiple belt drives, an adjacent undeflected belt can be used as a reference.

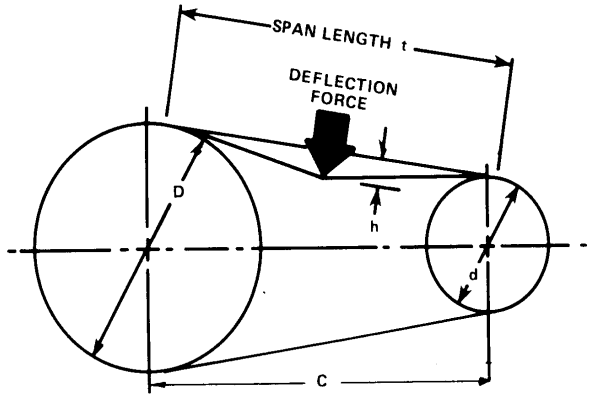

t = Span length, inches

C = Center distance, inches

D = Larger sheave diameter, inches

d = Smaller sheave diameter, inches

h = Deflection height, inches

DRIVE BELT TENSION ADJUSTMENT

3 - 7.5 TON MODELS

MODEL	TYPE		SHEAVE DIAMETER (in)	DEFLECTION FORCE (lbs)		DEFLECTION (in)
	BELT	DRIVE		Used	New	
3-6	AX	Standard	3.0 to 4.0	4.2±0.5	5.5±0.5	0.313
7.5 Ton	A, AX	Standard	2.6 to 3.6	4.5 ± .5	5.5±0.5	1/4" + 1/16"

RECOMMENDED POUNDS OF FORCE PER BELT

S-206 INDOOR FAN ROTATION CHECK

Evaporator Fan Rotation Check (Three Phase Models Only)

Check that fan rotates counter-clockwise when viewed from the drive side of unit and in accordance with rotation arrow shown on blower housing. If it does not, reverse any two incoming power cables at Single Point Power Block. In this case, repeat bearing check.

Do not attempt to change load side wiring. Internal wiring assures all motors and compressors will rotate in correct direction once evaporator fan motor rotation check has been made.

S-207 VARIABLE MOTOR SHEAVE ADJUSTMENT

Mounting & Adjusting Motor Sheaves VI, Vm & 2vp Variable Pitch Key Type Motor Sheaves Mounting:

1. All sheaves should be mounted on the motor or driving shaft with the set screw “A” toward the motor.
2. Be sure both driving and driven sheaves are in alignment and that shafts are parallel.
3. Fit internal key “C” between sheave and shaft, and lock set screw “A” securely in place.

Adjusting VI & Vm Sheaves:

1. Loosen set screw “B” using a 5/32" Allen key.
2. Adjust sheave pitch diameter for desired speed by opening moving part by half or full turns from closed position. DO NOT OPEN MORE THAN FIVE FULL TURNS.
3. Securely tighten set screw “B” over flat.

After Adjusting:

1. Carefully put on belts and adjust belt tension. DO NOT FORCE BELTS OVER GROOVES.
2. Be sure that all keys are in place and that all set screws are tight before starting drive. Check set screws and belt tension after 24 hours service.

NOTE: Future adjustments should be made by loosening the belt tension and increasing or decreasing the pitch diameter of the sheave by half or full turns as required. Readjust belt tension before starting drive.

SERVICING

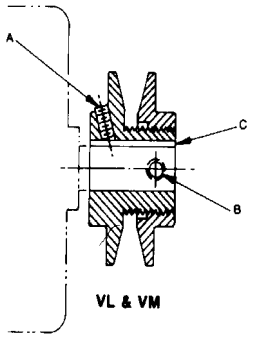

SHEAVE DIAGRAM

NOTE: Do not operate sheave with flange projecting beyond the hub end.

S-300 TESTING PRIMARY LIMIT CONTROL

CPG units use a snap-disk type primary limit device. Sometimes referred to as "stat on a stick". The limit setting is fixed and must not be readjusted in the field.

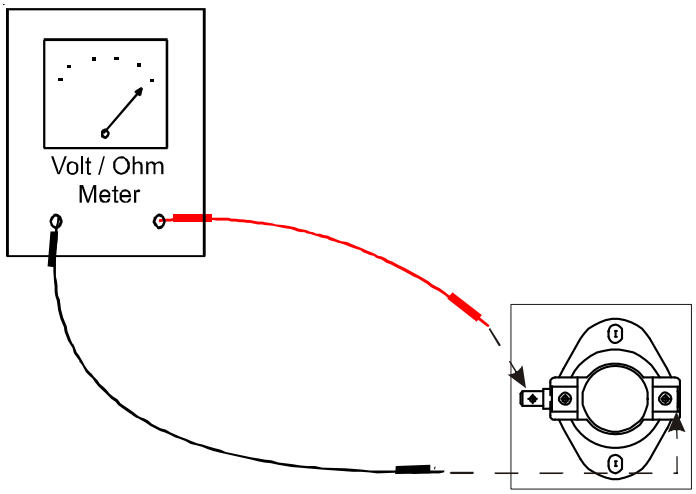

TESTING PRIMARY LIMIT CONTROL

Refer to the specification section to determine the proper limit cutout temperature for the model being serviced.

In all instances the limit control is wired in series with the ignition control.

If the temperature within the furnace should exceed this setting, the control will open, de-energizing the ignition control which in turn will open the electrical circuit to the gas valve.

The control will automatically reset when the temperature within the combustion chamber is sufficiently lowered.

WARNING

HIGH VOLTAGE!
Disconnect ALL power before servicing or installing this unit. Multiple power sources may be present. Failure to do so may cause property damage, personal injury or death.

1. Remove electrical power to unit. Some units may have more than one source of power.
2. Remove the wires from the limit control terminals.
3. Using an ohmmeter, test for continuity across the two terminals.
4. If limit test open allow unit to cool and retest.
5. If still open, replace the control.

S-301 TESTING AUXILIARY LIMIT

The auxiliary limit control is a preset nonadjustable control mounted in the blower compartment area.

It is connected in series with the rollout switch wiring to the gas valve. If its temperature should be exceeded, it will open, interrupting the voltage to the gas valve causing it to open.

An additional limit (primary limit) control is required for safety control of high temperature within the furnace or ductwork.

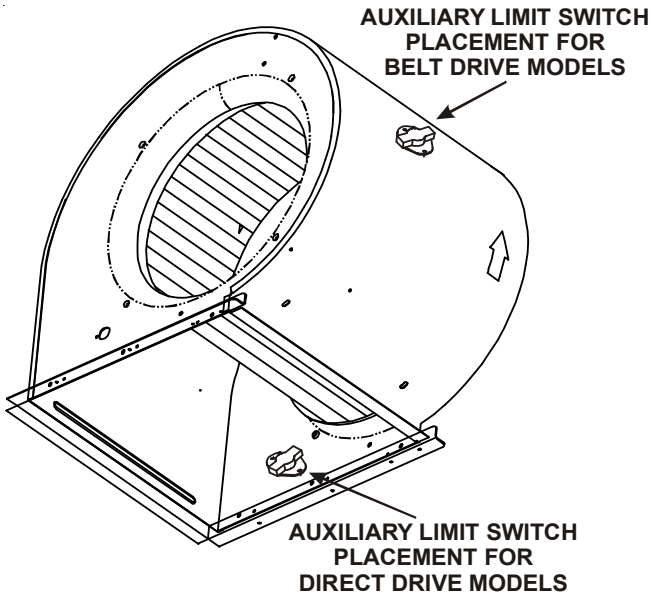

SERVICING

WARNING

HIGH VOLTAGE!
Disconnect ALL power before servicing or installing this unit. Multiple power sources may be present. Failure to do so may cause property damage, personal injury or death.

1. Remove the wires from the auxiliary limit control terminals.
2. Using an ohmmeter, test for continuity across the two terminals. No reading indicates the control is open. Push the red reset button, test again - if still open, replace the control.
3. If limit tests open, allow unit to cool and retest.
4. If still open, replace the control.

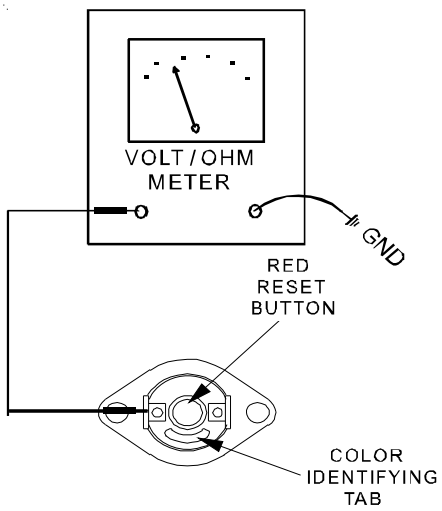

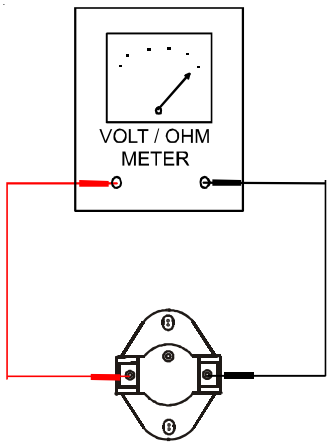

TESTING AUXILIARY LIMIT CONTROL

S-302 CHECKING FLAME ROLLOUT SWITCH

CPG units are equipped with a temperature-activated manual reset control. This control is mounted to the manifold assembly and is wired in series with the auxiliary limit and gas valve. The control is designed to open should a flame roll out occur. An over firing condition or flame impingement on the heat shield can also cause the control to open.

If the rollout control has opened, the circuit between the ignition control and gas valve will be interrupted and the ignition control module will go into lockout. The servicer should reset the ignition control by opening and closing the thermostat circuit. The servicer should look for the ignitor glowing which indicates there is power to the ignition control. The servicer should measure the voltage between each side of the rollout control and ground while the ignition control is try to power the gas valve.

CHECKING FLAME ROLLOUT SWITCH

Limit Switch Operation (Applies to Primary, Auxiliary, and Roll Out Limits) DSI systems.

If a limit switch opens, the indoor blower is energized on heat speed and the induced draft blower is energized. The LED on the control flashes "4" to indicate an open limit switch. The blower and inducer remain on while the limit switch is open. The gas valve is de-energized. Power to the thermostat "R" is removed while the limit switch is open.

When the limit switch re-closes, the induced draft motor runs through its post purge and the indoor blower goes through the heat off delay.

If a call for heat exists when the limit switch re-closes, the control goes through a pre-purge period and then makes an ignition attempt. The indoor blower remains on (for the delay off time) during the re-ignition attempt.

1. If no voltage is measured on either side of control it indicates ignition control or wiring to control problem.
2. If voltage is measured on one side of the control and not the other, it indicates the control is open.
3. If voltage is measured on both sides of the control the wiring to gas valve or valve is at fault.

Servicing procedure with furnace not firing.

1. Confirm that the outer door was in place and all screws tightened. (No leaks under the door.)
2. Check to see if any damage was done to the furnace especially the wiring.
3. Confirm that heat exchanger is not obstructed by feeling for discharge air from the flue hood when the combustion blower is running but the unit is not firing.

If the above steps do not suggest the reason the control has tripped the furnace should be fired.

1. Remove the heating compartment door.

2. Turn of the power or open the thermostat circuit.
3. Reset the rollout control.
4. Turn power on and put the unit into a call for heating.

CAUTION

Flame rollout could occur. Keep face and hands a safe distance from burner area.

5. Look under the heat shield as the unit is running. Flames should be drawn into firing tubes.
   a. If only one burners flame is not drawn into the tube, that tube is restricted.
   b. If, without the air circulation blower running, all flames are not drawn into the tubes either the collector box, combustion blower, or flue outlet is obstructed. If the combustion blower or flue outlet is obstructed, the pressure switch should have opened preventing the unit from firing, also inspect the unit pressure switch and wiring.
   c. If the burner flame is not drawn into the tube only when the air circulation blower is running, then a cracked heat exchanger tube is present.

S-303 TESTING INDUCER MOTOR

WARNING

HIGH VOLTAGE!
Disconnect ALL power before servicing or installing this unit. Multiple power sources may be present. Failure to do so may cause property damage, personal injury or death.

1. Disconnect the motor wire leads from its connection point at integrated ignition control module.
2. Using and ohmmeter, test for continuity between each of the motor leads.
3. Touch one probe of the ohmmeter to the motor frame (ground) and the other probe in turn to each lead.

If the windings do not test continuous or a reading is obtained to ground, replace the motor.

4. After completing check and/or replacement of induced draft blower motor.
5. Turn on electrical power and verify proper unit operation.

S-304 TESTING GAS VALVE

Direct Spark Ignition (DSI) Systems

TWO STAGE MODELS ONLY: A two-stage combination redundant operator type gas valve which provides all manual and automatic control functions required for gas fired heating equipment is used.

The valve provides control of main burner gas flow, pressure regulation, and 100 percent safety shut-off.

WARNING

HIGH VOLTAGE!
Disconnect ALL power before servicing or installing this unit. Multiple power sources may be present. Failure to do so may cause property damage, personal injury or death.

1. Ensure gas valve and main gas supply are on.
2. Using a voltmeter, check from C and M on gas valve for 24 volts to gas valve.
3. If 24 volts are present and no gas flows through the valve, replace valve.

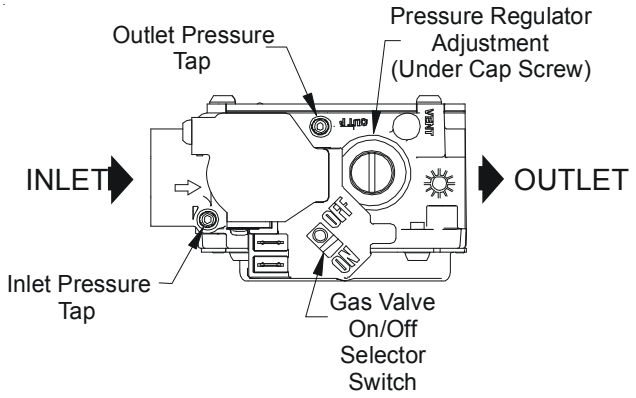

36G22

For use with CPG036045 ONLY.

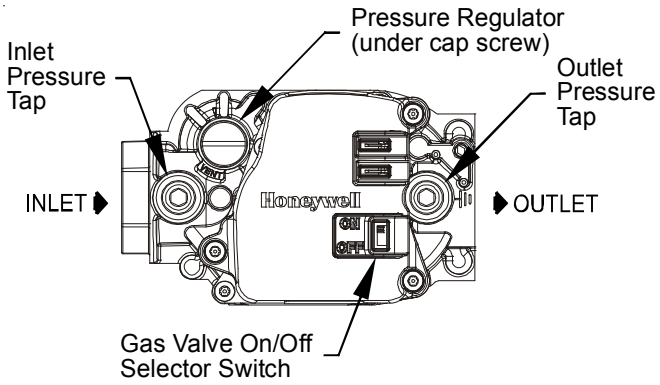

Honeywell VR81215 Single Stage

SERVICING

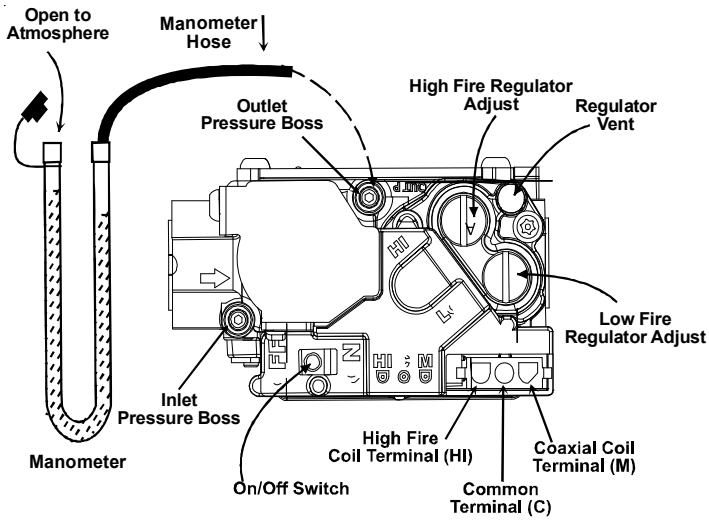

36G54

For use with all 3-5 ton BA revision models except CPG036045.

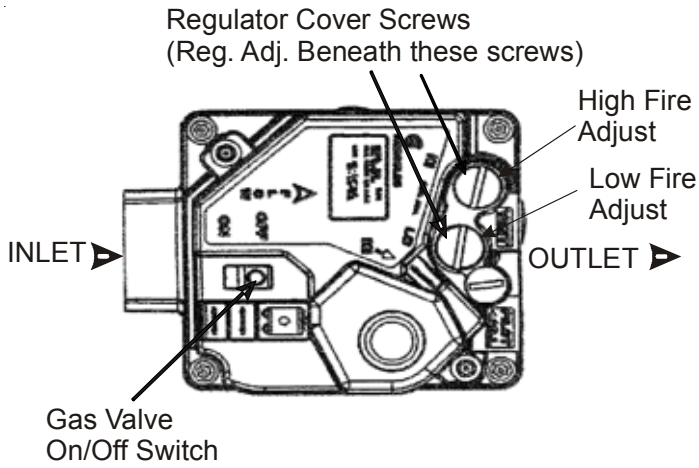

36H54

PRESSURE ADJUSTMENTS

S-305 CHECKING MAIN BURNERS

The main burners are used to provide complete combustion of various fuels in a limited space, and transfer this heat of the burning process to the heat exchanger.

Proper ignition, combustion, and extinction are primarily due to burner design, orifice sizing, gas pressure, primary and secondary air, vent and proper seating of burners.

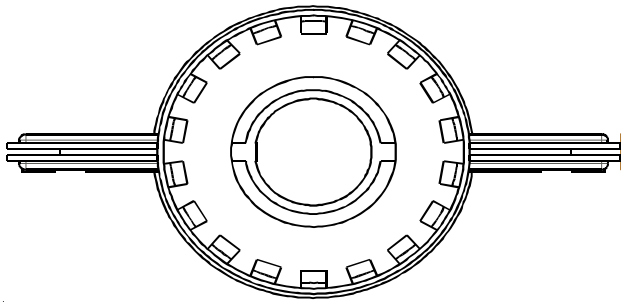

BECKETT BURNER

WARNING

Disconnect gas and electrical power supply.

In checking main burners, look for signs of rust, oversized and undersized carry-over ports restricted with foreign material, etc.

S-306 CHECKING ORIFICES

A predetermined fixed gas orifice is used in all of these furnaces. That is an orifice which has a fixed bore and position.

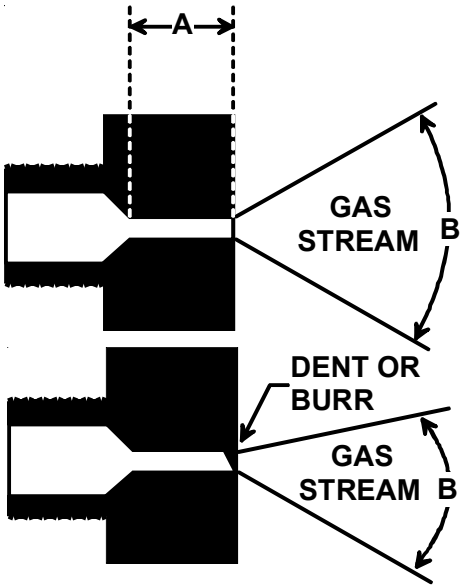

The length of Dimension "A" determines the angle of Gas Stream Defraction, "B".

A dent or burr will cause severe deflection of gas stream.

No resizing should be attempted until all factors are taken into consideration such as inlet manifold gas pressure, alignment, and positioning, specific gravity and BTU content of the gas being consumed.

The only time resizing is required is when a reduction in firing rate is required for an increase in altitude.

SERVICING

Orifices should be treated with care in order to prevent damage. They should be removed and installed with a box-end wrench in order to prevent distortion. In no instance should an orifice be peened over and redrilled. This will change the angle or deflection of the vacuum effect or entraining of primary air, which will make it difficult to adjust the flame properly. This same problem can occur if an orifice spud of a different length is substituted.

WARNING

Disconnect gas and electrical power supply.

1. Check orifice visually for distortion and/or burrs.
2. Check orifice size with orifice sizing drills.
3. If resizing is required, a new orifice of the same physical size and angle with proper drill size opening should be installed.

S-307 CHECKING GAS PRESSURE

Gas inlet and manifold pressures should be checked and adjusted in accordance to the type of fuel being consumed.

WARNING

Disconnect gas and electrical power supply.

1. Connect a water manometer or adequate gauge to the inlet pressure fitting of the gas valve.
2. Remove the pressure tap fitting at the manifold if provided or check at the gas valve outlet fitting and connect another manometer or gauge.

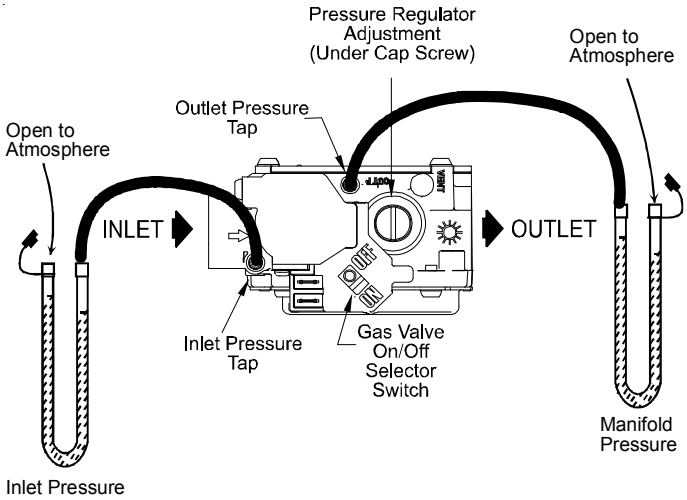

Single Stage 36G22

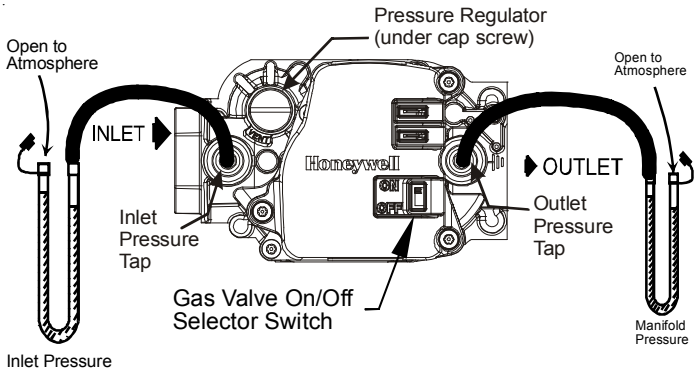

Honeywell VR81215 Single Stage

MEASURING INLET AND MANIFOLD GAS PRESSURE

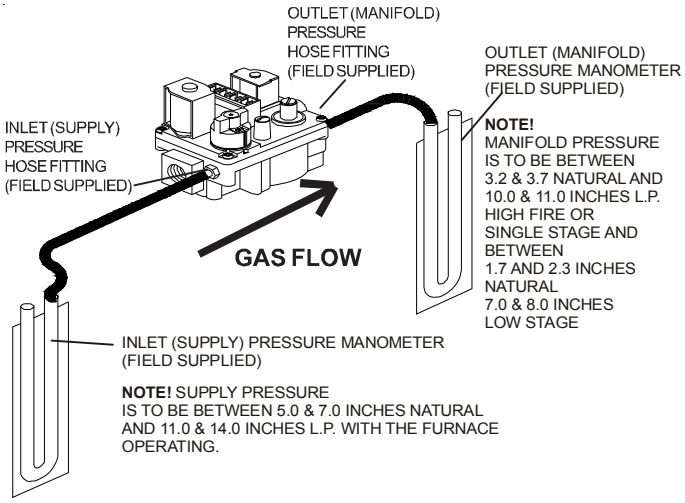

TWO-STAGE H VALVE

MEASURING INLET AND MANIFOLD GAS PRESSURE

With Power ON:

WARNING

Line Voltage now present.

3. Put unit into heating cycle and turn on all other gas consuming appliances.

SINGLE STAGE MODELS

For **NATURAL GAS:**

a. Inlet pressure should be a nominal 7" w.c.

b. Manifold pressure for single stage heat models and 2 stage heat models on low stage should be 2.0” w.c. ± .3"w.c.

c. Manifold pressure for single stage heat models and 2 stage heat models on high stage should be 3.5” ± .3"w.c.

SERVICING

For **PROPANE GAS:**

a. Inlet pressure should be a nominal 11" w.c.

b. Manifold pressure for 2 stage heating models on low stage should be 6" w.c.

c. Manifold pressure for single stage heat models and 2 stage heat models on high stage should be 10” w.c.

MANIFOLD GAS PRESSURE

2 Stage Heat Models

Gas		Range	Nominal
Natural	Low Stage	1.6 - 2.2" w.c.	2.0" w.c.
	High Stage	3.2 - 3.8" w.c.	3.5" w.c.
Propane	Low Stage	5.7 - 6.3" w.c.	6.0" w.c.
	High Stage	9.7 - 10.3" w.c.	10.0" w.c.

Single Stage Heat Models

Gas		Range	Nominal
Natural	Single Stage	3.2 - 3.8" w.c.	3.5" w.c.
Propane	Single Stage	9.7 - 10.3" w.c.	10.0" w.c.

If operating pressures differ from chart, make necessary pressure regulator adjustments, check piping size, etc., and/or consult with local utility.

S-308 CHECKING FOR DELAYED IGNITION

Delayed ignition is a delay in lighting a combustible mixture of gas and air which has accumulated in the combustion chamber.

When the mixture does ignite, it may explode and/or rollout causing burning in the burner venturi.

If delayed ignition should occur, the following should be checked:

1. Improper gas pressure - adjust to proper pressure. (See S-307)
2. Improper burner positioning - burners should be in locating slots, level front to rear and left to right.
3. Carry over (lighter tube or cross lighter) obstructed - clean.
4. Main burner orifice(s) deformed, or out of alignment to burner - replace.

S-309 CHECKING FOR FLASHBACK

Flashback will also cause burning in the burner venturi, but is caused by the burning speed being greater than the gas-air flow velocity coming from a burner port.

Flashback may occur at the moment of ignition, after a burner heats up or when the burner turns off. The latter is known as extinction pop.

Since the end results of flashback and delayed ignition can be the same (burning in the burner venturi) a definite attempt should be made to determine which has occurred.

If flashback should occur, check for the following:

1. Improper gas pressure - adjust to proper pressure. See S-307.
2. Check burner for proper alignment and/or replace burner.
33. Improper orifice size - check orifice for obstruction.

S-310 CHECKING PRESSURE CONTROL

A pressure control device is used to measure negative pressure at the induced draft blower motor inlet to detect a partial or blocked flue.

Pressure Switch Operation (DSI Direct Spark System)

The pressure switch is ignored unless there is a call for heat. When the control receives a call for heat, the control checks to see that the pressure switch is open. If the control sees that the pressure switch is closed before the induced draft blower is energized, the LED will flash a code of "2" (to indicate the pressure switch is stuck closed) and the inducer will remain off until the pressure switch opens.

If the pressure switch opens before the ignition period, the induced draft blower will remain on and the control will stay in pre-purge until the pressure switch is closed for an entire 15 second pre-purge period. The LED will flash a code of "3" to indicate open pressure switch.

If the pressure switch opens after the gas valve has been energized, the control will de-energize the gas valve and run the indoor blower through the heat off delay. The inducer stays on until the pressure switch re-closes. Then the control makes another ignition attempt.

WARNING

HIGH VOLTAGE!
Disconnect ALL power before servicing or installing this unit. Multiple power sources may be present. Failure to do so may cause property damage, personal injury or death.

1. Remove wires from the electrical terminals.
2. Using a VOM check from Common to NO (Normally Open) - should read open.

   If switch reads as noted proceed to Step 3, otherwise replace control.
3. Remove the pressure control hose from the control and interconnect with an inclined manometer as shown:

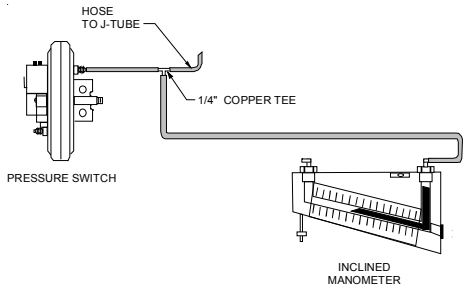

Reconnect wires to the Common and NO terminals.

SERVICING

With Power ON:

WARNING

Line Voltage now present.

4. Energize furnace for heating cycle. The induced draft blower motor will begin to run. The inclined manometer should read approximately -1.2" ± 0.3" W.C with no combustion.
5. Remove and check the two electrical wires and using the VOM check from Common to NO (Normally Open), it should read closed (with I.D. motor running). If not as above, replace pressure control.
6. Reconnect all wires to the control and place in heating cycle.
7. As the unit fires on high stage, the inclined manometer negative pressure will drop to -0.9" ± 0.3" W.C.
8. If not as listed, replace control.

Note: the pressure switch **must** be mounted with the diaphragm in a vertical position.

S-311 HIGH ALTITUDE APPLICATION

MPORTANT NOTE: The gas/electric units naturally derate with altitude. Do not attempt to increase the firing rate by changing orifices or increasing the manifold pressure. This can cause poor combustion and equipment failure. At all altitudes, the manifold pressure must be within 0.3 inches W.C. of that listed on the nameplate for the fuel used. At all altitudes and with either fuel, the air temperature rise must be within the range listed on the unit nameplate. Refer to the Installation Manual provided with the LP kit for conversion from natural gas to propane gas and for altitude adjustments.

When this package unit is installed at high altitude, the appropriate High Altitude orifice kit may be installed. As altitude increases, there is a natural reduction in the density of both the gas fuel and combustion air. This kit will provide the proper design certified input rate within the specified altitude range. High altitude kits are not approved for use in Canada. For installations above 2,000 feet, use kit HA-02. The HA-02 kit is used for both Natural and LP gas at high altitudes.

For CPG036045, use LPT-00A propane conversion kit for propane conversions at altitudes below 2000 feet. Natural gas installations below 2000 feet do not require a kit. For other BA revisions on 3, 4 and 5 ton models, use LPM-05.

For propane conversion above 2000 feet, high altitude kit HA-02 is required in addition to propane conversion kit LPT-001 or LPM-05.

INPUT/BURNER	HIGH ALTITUDE KIT	20,000 BTUH NAT/20,000 BTUH/L.P.							
		ELEVATION ABOVE SEA-LEVEL (FEET)							
		2000	3000	4000	4500	5000	6000	7000	8000
U.S. BURNER ORIFICE	HA-02	45/55	47/55	47/56	-	47/56	48/57	48/58	49/58
CANADA BURNER ORIFICE		45/55	-	-	48/57	-	-	-	-

INPUT/BURNER	HIGH ALTITUDE KIT	22,500 BTUH NAT/20,000 BTUH/L.P.							
		ELEVATION ABOVE SEA-LEVEL (FEET)							
		2000	3000	4000	4500	5000	6000	7000	8000
U.S. BURNER ORIFICE	HA-02	44/55	44/55	45/56	-	45/56	46/57	47/58	47/58
CANADA BURNER ORIFICE		44/55	-	-	47/57	-	-	-	-

INPUT/BURNER	HIGH ALTITUDE KIT	25,000 BTUH NAT/20,000 BTUH/L.P.							
		ELEVATION ABOVE SEA-LEVEL (FEET)							
		2000	3000	4000	4500	5000	6000	7000	8000
U.S. BURNER ORIFICE	HA-02	43/55	43/55	44/56	-	44/56	44/56	45/57	45/57
CANADA BURNER ORIFICE		43/55	-	-	46/57	-	-	-	-

S-313 TESTING IGNITION CONTROL MODULE

NOTE: Failure to earth ground the unit, reversing the neutral and hot wire connection to the line (polarity), or a high resistance connection in the ground or neutral lines may cause the control to lockout due to failure to detect flame.

WARNING

HIGH VOLTAGE
Wiring to this unit must be properly polarized and grounded. Disconnect ALL power before installing or servicing this unit. Multiple power sources may be present.

The ground wire must run from the unit all the way back to the electrical panel. Proper grounding can be confirmed by disconnecting the electrical power and measuring resistance between the neutral (white) connection and the burner closest to the flame sensor. Resistance should be less than 10 ohms.

DSI Direct Spark Ignition Systems

NORMAL SEQUENCE OF OPERATION (DSI Direct Spark Ignition System)

1. Thermostat calls for heat by energizing "W". The control checks the pressure switch for open condition. If the pressure switch is closed the control will flash code "3" and wait for the pressure switch to open.
2. The induced draft motor is energized and the control flashes code "2" and waits for the pressure switch to close. Once the pressure switch is closed, the LED stops flashing and the control begins timing the 15 second pre-purge.

SERVICING

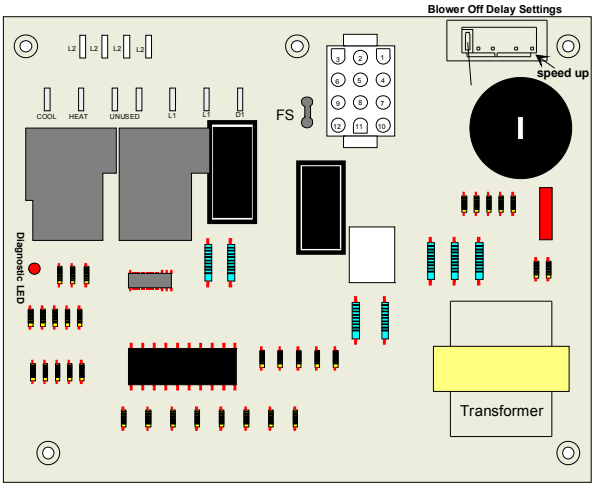

DSI Control Board

3. The control energizes the spark igniter and gas valve for 7 seconds. If flame is established, the control goes into a 30 second heat on delay.
4. The indoor blower is energized at the heat speed after a 30 second on delay.
5. The control monitors the safety circuit inputs, flame, and thermostat during operation.
6. When the thermostat is satisfied, the gas valve is de-energized and the induced draft blower remains on for a 29 second post purge. The indoor blower remains on for the selected heat blower off delay (90, 120, or 150 seconds). Indoor blower off timing begins when thermostat call for heat ends.

Testing Direct Spark Ignition (DSI) systems

Thermostat calling for heat (15 second prepurge time and 7 second trial for ignition).

1. Check for 230 VAC from L1 terminal of control module to L2. No voltage - check wire connections, continuity, etc.
2. Check for 24 VAC at "R" to "C" thermostat terminals.
   a. No voltage - check 3 amp automotive type fuse on control board. A blown fuse would indicate a short in the 24 VAC circuit (thermostat or limit circuit).
   b. Voltage Present - check limit, auxiliary limit and rollout (S-300, S-301 and S-302). If limit, auxiliary limit and rollout are closed, then check for 24 VAC at the gas valve terminals.

      No 24 VAC at gas valve - replace Control board.

B1809918 Ignition Board Fault Codes		
Status Light	Equipment Status	Check
On	Normal Operation	
Off	No Power or Internal Control Fault	Check Input Power, Check Fuse on Control, Replace Control
1 Blink	Ignition Failure, Open Rollout Switch, or Open Aux. Limit Switch	Check Gas Flow, Check Gas Pressure, Check Gas Valve, Check Flame Sensor, Check Flame Rollout, Check Aux. Limit.
2 Blinks	Pressure Switch Open	Check Pressure Switch
3 Blinks	Pressure Switch Closed	Check Pressure Switch
4 Blinks	Open Main Limit Switch	Main Limit Switch Open
5 Blinks	False Flame Sensed	Sticking Gas Valve
6 Blinks	Compressor Output Delay	3 Minute Compressor Anti-Cycle Timer

NOTE: The flash rate is 0.25 seconds on, 0.25 seconds off, with a 2-second pause between codes.

S-314 CHECKING FLAME SENSOR

A flame sensing device is used in conjunction with the ignition control module to prove combustion. If a microamp signal is not present the control will de-energize the gas valve and "retry" for ignition or lockout.

DSI Direct Spark Ignition Systems

WARNING

HIGH VOLTAGE!
Disconnect ALL power before servicing or installing this unit. Multiple power sources may be present. Failure to do so may cause property damage, personal injury or death.

1. Disconnect the flame sensor wire from terminal FS of the ignition control module.

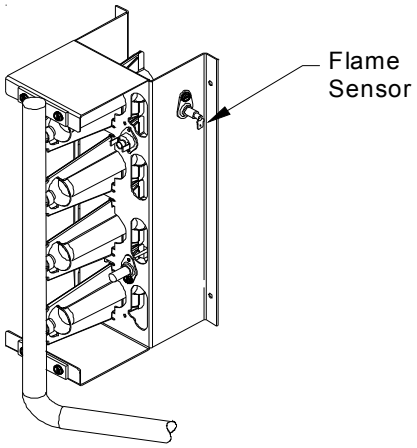

Flame Sensor

2. Connect a microamp meter in series with this wire and terminal FS.
3. Be sure the negative side of the meter is to the wire and the positive of the meter is to terminal FS.
4. Turn on Power.

WARNING

Line Voltage now present.

5. With Power ON, Place the unit into a heating cycle.
6. As soon as flame is established a microamp reading should be evident once proof of flame (microamp reading) is established, the hot surface ignitor will be de-energized.
7. The microamp reading should be 4 - 6 microamps.
8. If the microamp current is less than 0.5 microamp the control will lockout and flash a code of 1 flash after attempting to reestablish flame sense.
9. If the microamp reading is less than the minimum specified, check for high resistance wiring connections, the distance (3/16") between the sensor and burner, flame sensor connections, dirty flame sensor or poor grounding.
10. If no reading, check for continuity on all components and if good - replace ignition control module.

NOTE: Contaminated fuel or combustion air can create a nearly invisible coating on the flame sensor. This coating works as an insulator causing a loss in the flame sense signal. If this situation occurs the flame sensor must be cleaned with steel wool. Do not use sand paper, the silicone in sand paper will further contaminate the sensor.

WARNING

HIGH VOLTAGE!
DISCONNECT ALL POWER BEFORE SERVICING OR INSTALLING THIS UNIT. MULTIPLE POWER SOURCES MAY BE PRESENT. FAILURE TO DO SO MAY CAUSE PROPERTY DAMAGE, PERSONAL INJURY OR DEATH.

3 - 6 TON UNITS

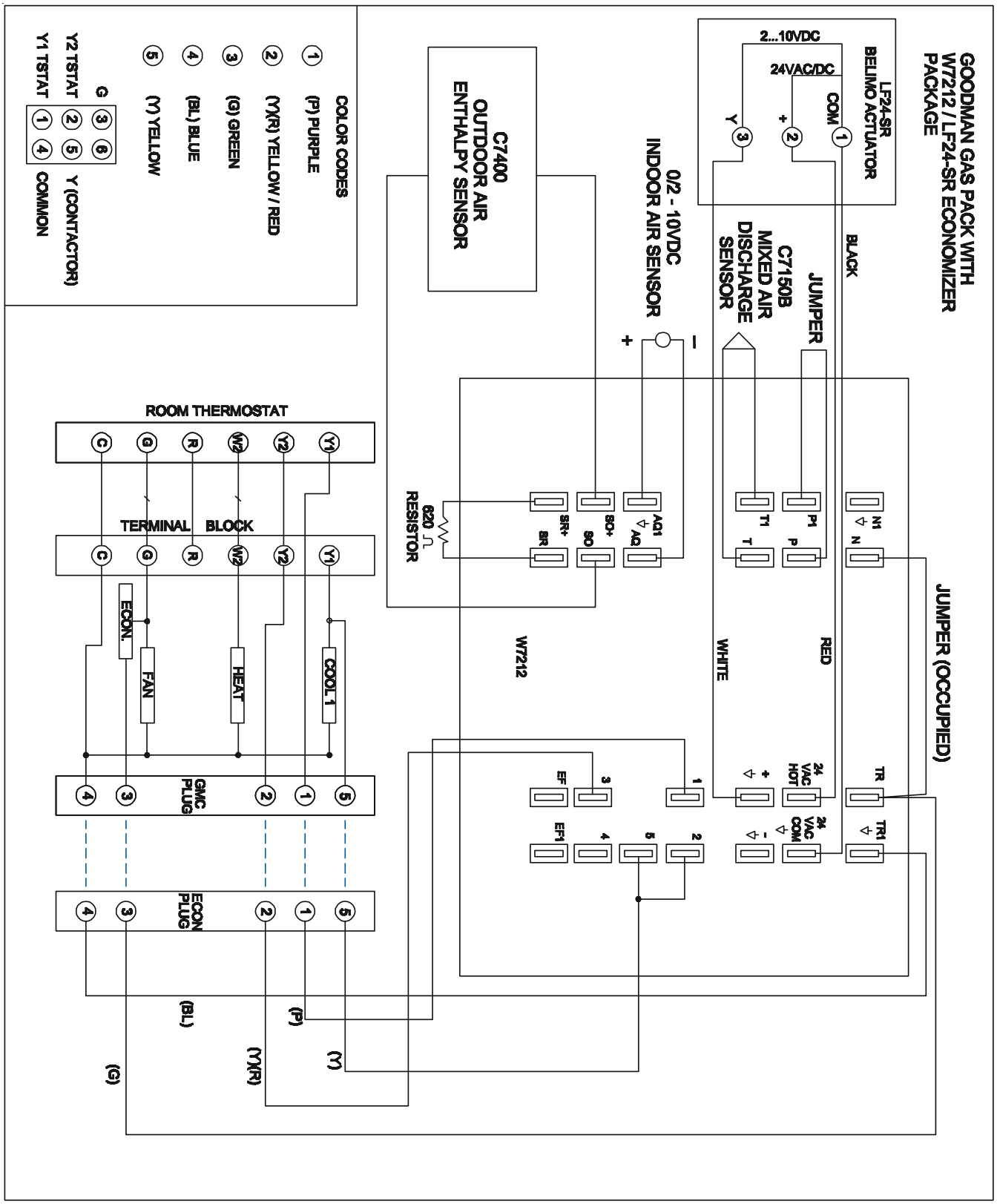

Wiring is subject to change. Always refer to the wiring diagram on the unit for the most up-to-date wiring.

ACCESSORIES WIRING DIAGRAMS CPG ECONOMIZER

WARNING

HIGH VOLTAGE!
DISCONNECT ALL POWER BEFORE SERVICING OR INSTALLING THIS UNIT. MULTIPLE POWER SOURCES MAY BE PRESENT. FAILURE TO DO SO MAY CAUSE PROPERTY DAMAGE, PERSONAL INJURY OR DEATH.

7.5 TON UNITS

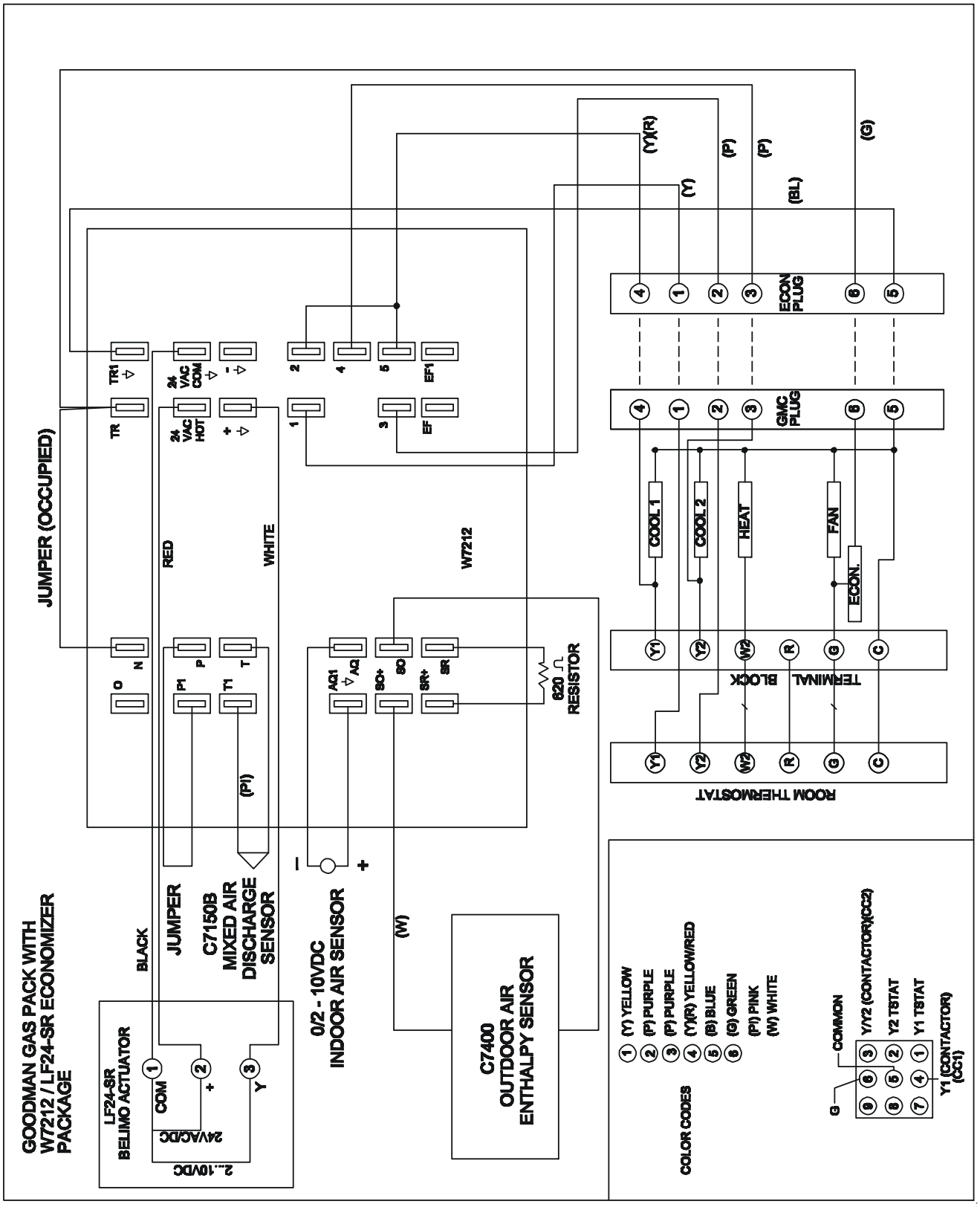

Wiring is subject to change. Always refer to the wiring diagram on the unit for the most up-to-date wiring.

ACCESSORIES WIRING DIAGRAMS

POWERED CONV. OUTLET

WARNING

HIGH VOLTAGE!
DISCONNECT ALL POWER BEFORE SERVICING OR INSTALLING THIS UNIT. MULTIPLE POWER SOURCES MAY BE PRESENT. FAILURE TO DO SO MAY CAUSE PROPERTY DAMAGE, PERSONAL INJURY OR DEATH.

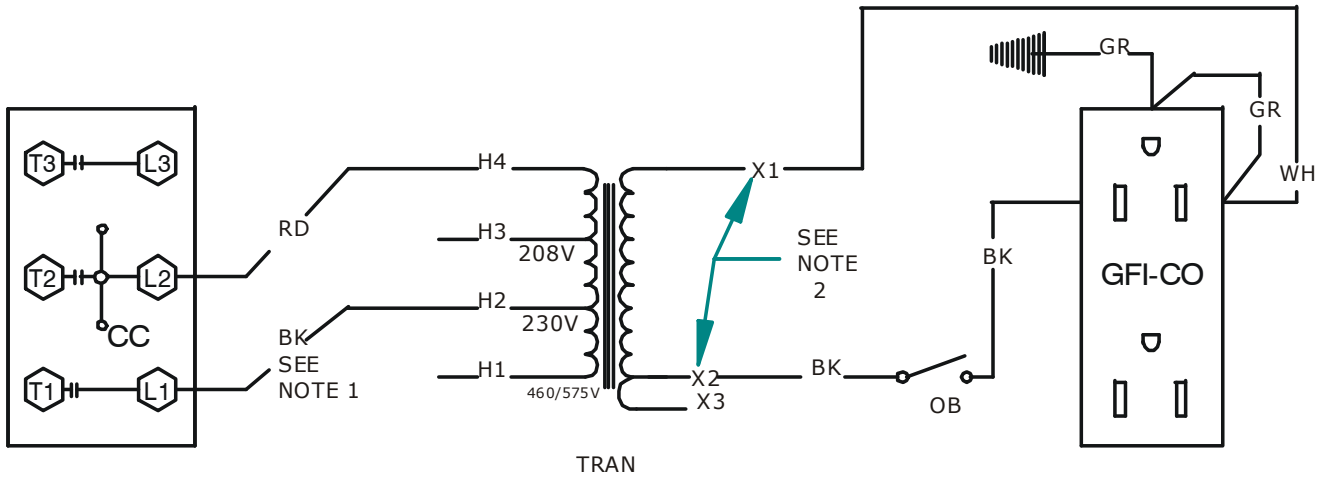

NOTES:

1. FOR 208V OPERATION MOVE BLACK WIRE FROM H2 TO H3 ON TRANSFORMER. 406V AND 575V UNITS WILL LEAVE FACTORY WITH BK WIRE CONNECTED TO H1.

2. FOR 575V MODELS, BK WILL GO TO X1 ON TRANSFORMER AND WH WILL GO TO X3.

LEGEND:

CC - COMPRESSOR CONTACT
TRAN - OUTLET TRANSFORMER
OB - OUTLET BREAKER
GFI-CO - GROUND FAULT INTERUPTED - CONVENIENCE OUTLET

0140L00698 REV A

Wiring is subject to change. Always refer to the wiring diagram on the unit for the most up-to-date wiring.

WARNING

HIGH VOLTAGE!
DISCONNECT ALL POWER BEFORE SERVICING OR INSTALLING THIS UNIT. MULTIPLE POWER SOURCES MAY BE PRESENT. FAILURE TO DO SO MAY CAUSE PROPERTY DAMAGE, PERSONAL INJURY OR DEATH.

POWER EXHAUST 3 - 6 TON

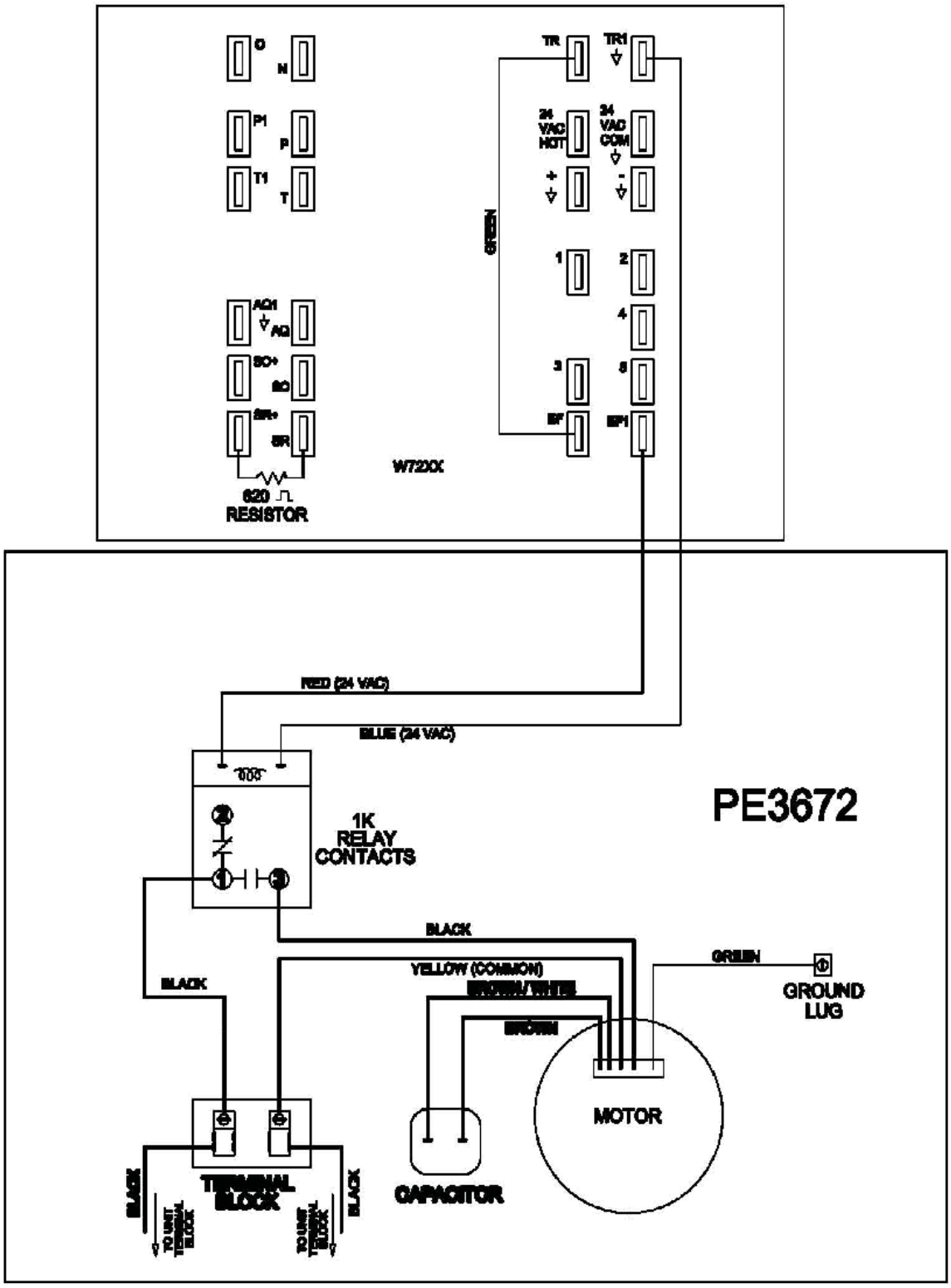

Wiring is subject to change. Always refer to the wiring diagram on the unit for the most up-to-date wiring.

ACCESSORIES WIRING DIAGRAMS

PE90150*

WARNING

HIGH VOLTAGE!
DISCONNECT ALL POWER BEFORE SERVICING OR INSTALLING THIS UNIT. MULTIPLE POWER SOURCES MAY BE PRESENT. FAILURE TO DO SO MAY CAUSE PROPERTY DAMAGE, PERSONAL INJURY OR DEATH.

POWER EXHAUST 7.5 TON

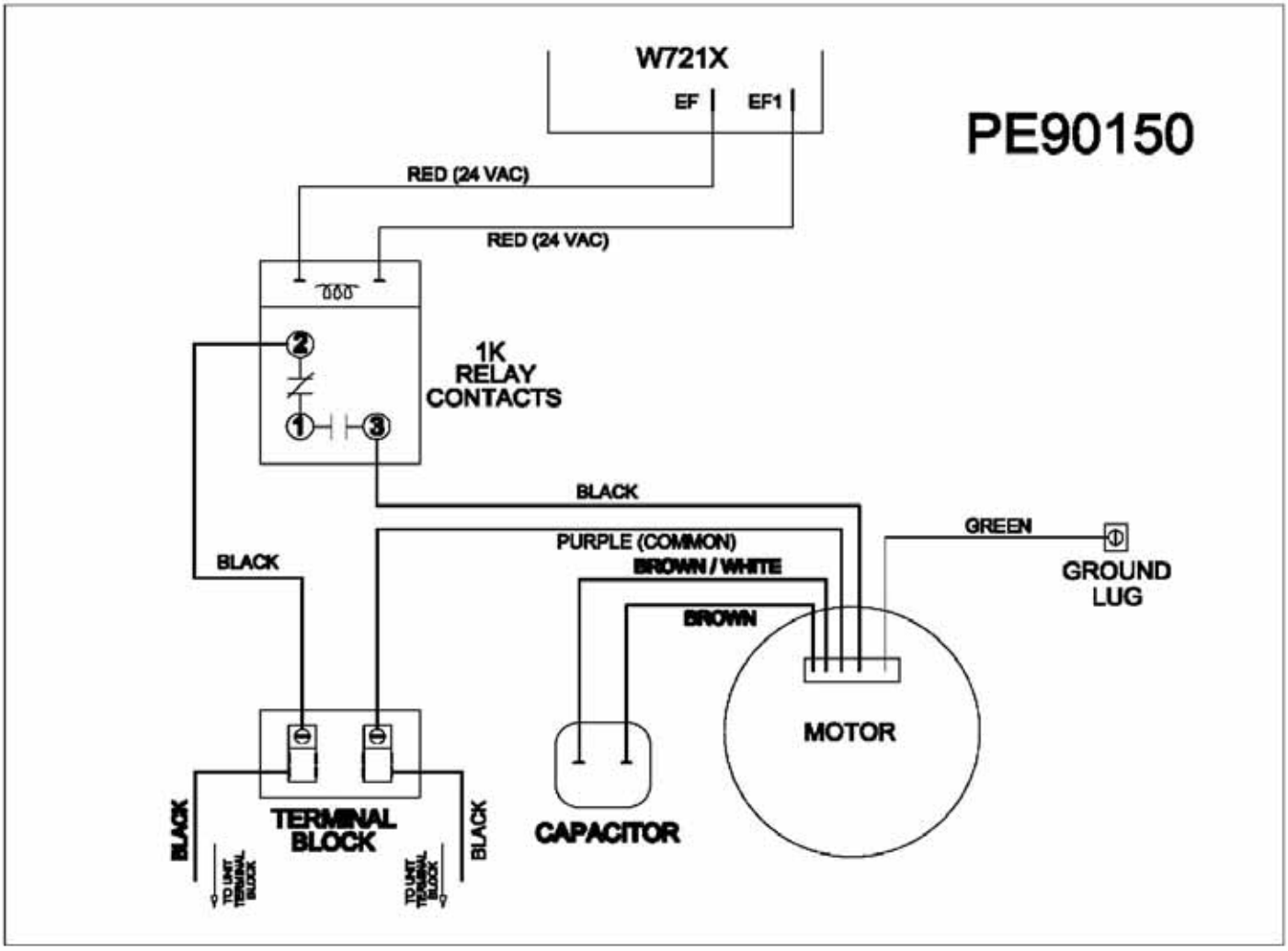

Wiring is subject to change. Always refer to the wiring diagram on the unit for the most up-to-date wiring.

ACCESSORIES WIRING DIAGRAMS CPH/C ECONOMIZER

WARNING

HIGH VOLTAGE!
DISCONNECT ALL POWER BEFORE SERVICING OR INSTALLING THIS UNIT. MULTIPLE POWER SOURCES MAY BE PRESENT. FAILURE TO DO SO MAY CAUSE PROPERTY DAMAGE, PERSONAL INJURY OR DEATH.

3 - 6 TON UNITS

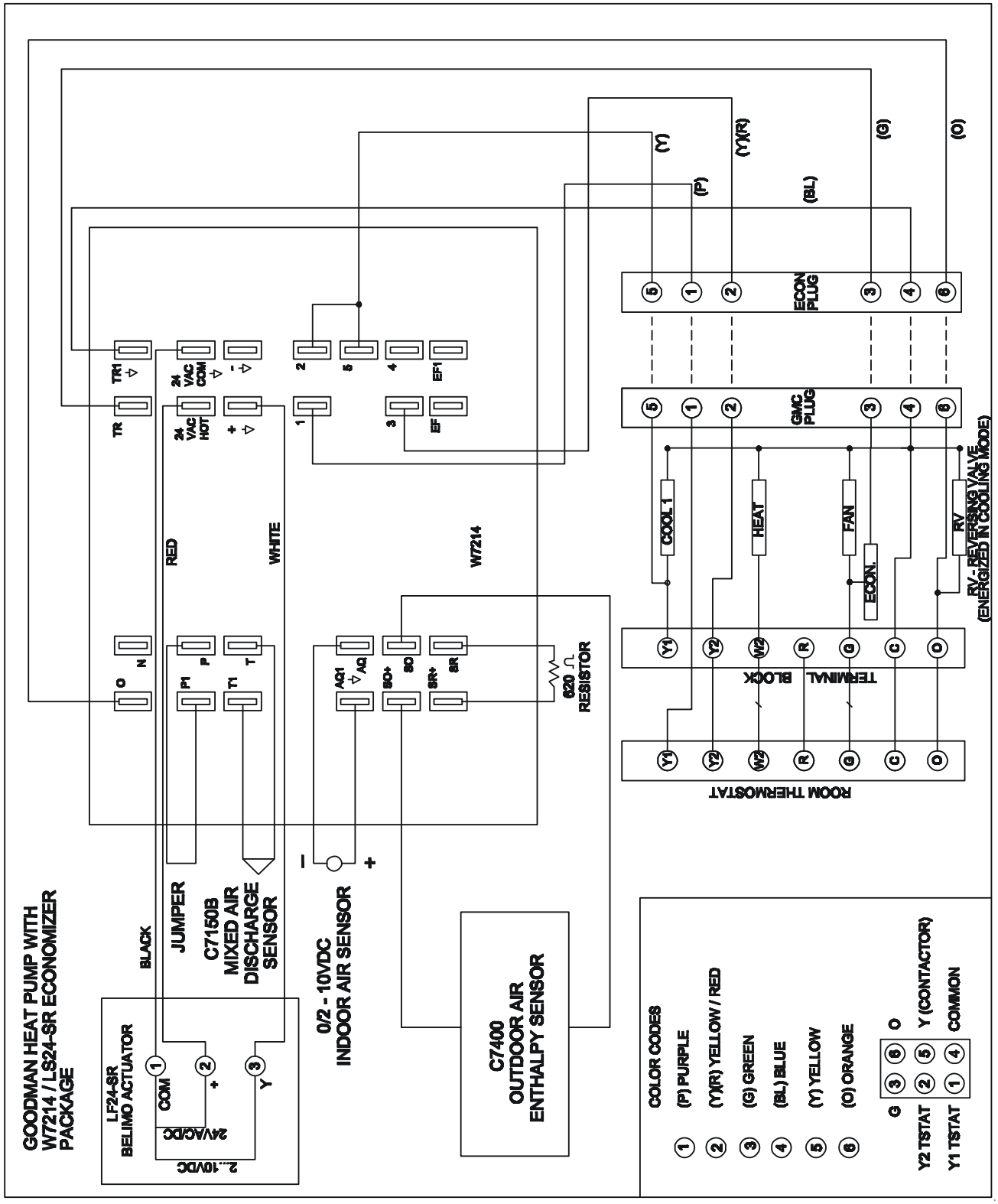

Wiring is subject to change. Always refer to the wiring diagram on the unit for the most up-to-date wiring.

WARNING

HIGH VOLTAGE!
DISCONNECT ALL POWER BEFORE SERVICING OR INSTALLING THIS UNIT. MULTIPLE POWER SOURCES MAY BE PRESENT. FAILURE TO DO SO MAY CAUSE PROPERTY DAMAGE, PERSONAL INJURY OR DEATH.

7.5 TON UNITS

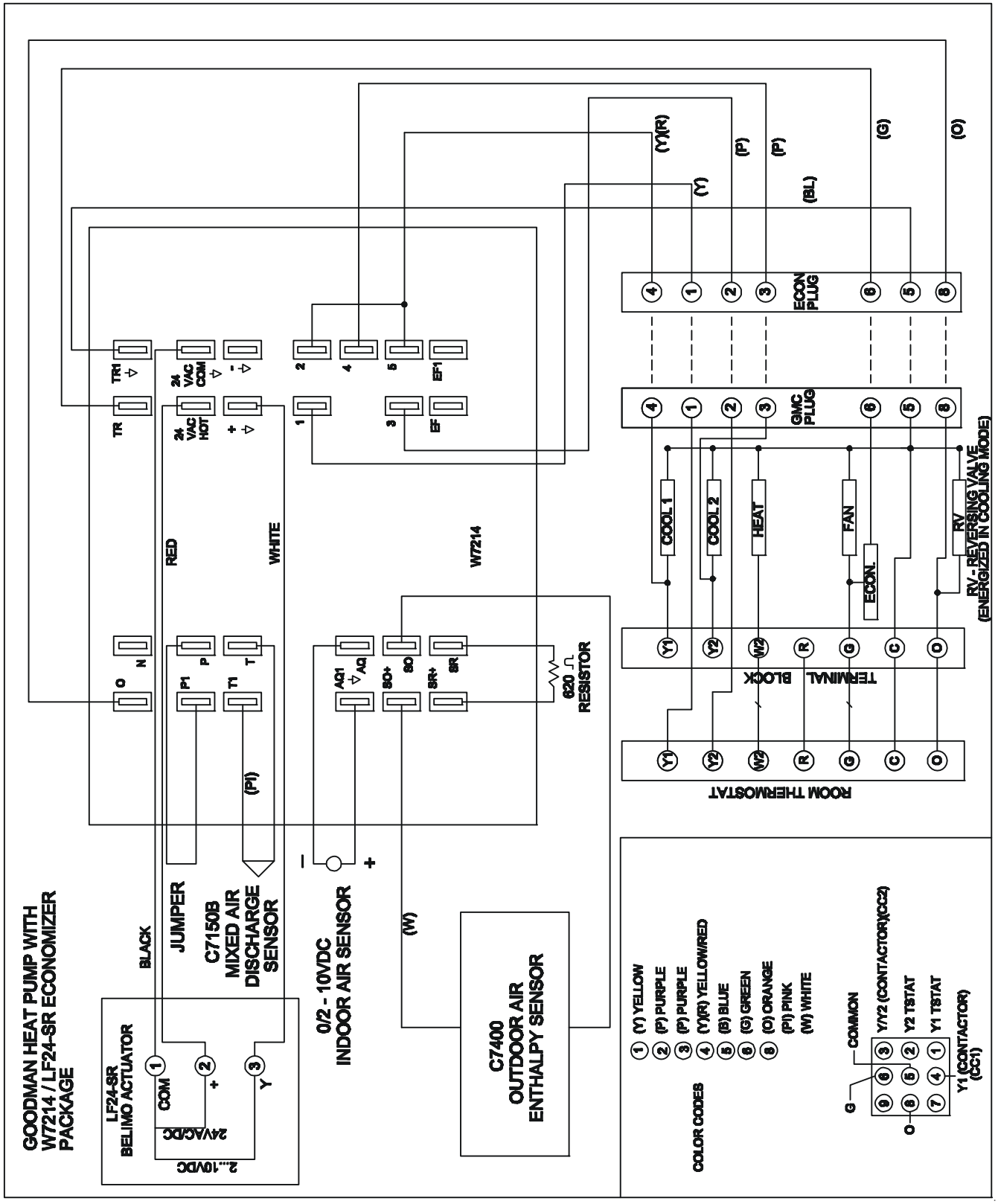

Wiring is subject to change. Always refer to the wiring diagram on the unit for the most up-to-date wiring.

ACCESSORIES WIRING DIAGRAMS

WARNING

HIGH VOLTAGE!
DISCONNECT ALL POWER BEFORE SERVICING OR INSTALLING THIS UNIT. MULTIPLE POWER SOURCES MAY BE PRESENT. FAILURE TO DO SO MAY CAUSE PROPERTY DAMAGE, PERSONAL INJURY OR DEATH.

PACKAGE SYSTEM WIRING DIAGRAM - 1 STAGE ELECTRIC HEAT

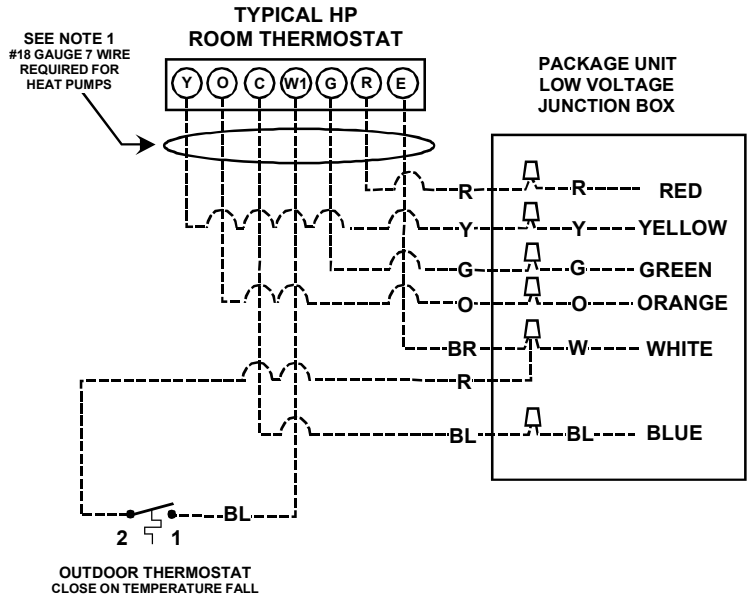

PACKAGE SYSTEM WIRING DIAGRAM - 2 STAGE ELECTRIC HEAT ABOVE 10 KW

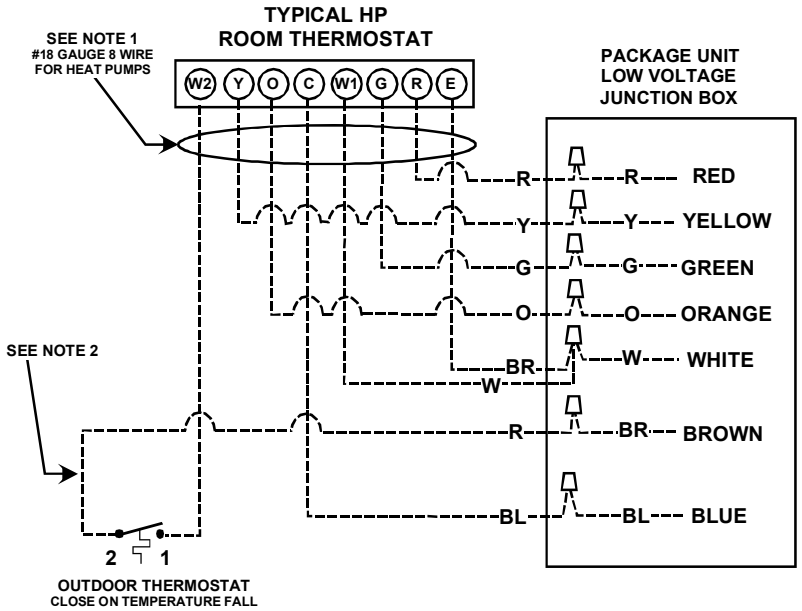

NOTES:

1) **"O" and "E" used on heat pumps only.**
2) **Connect wire from terminal #1 on outdoor thermostat to the white wire on package units if single stage indoor thermostat is used.**

Color Codes
R - Red
Y - Yellow
BL - Blue
BR - Brown
O - Orange
W - White
G - Green

OT18-60A OUTDOOR THERMOSTAT

Wiring is subject to change. Always refer to the wiring diagram on the unit for the most up-to-date wiring.

ACCESSORIES WIRING DIAGRAMS

WARNING

HIGH VOLTAGE!
DISCONNECT ALL POWER BEFORE SERVICING OR INSTALLING THIS UNIT. MULTIPLE POWER SOURCES MAY BE PRESENT. FAILURE TO DO SO MAY CAUSE PROPERTY DAMAGE, PERSONAL INJURY OR DEATH.

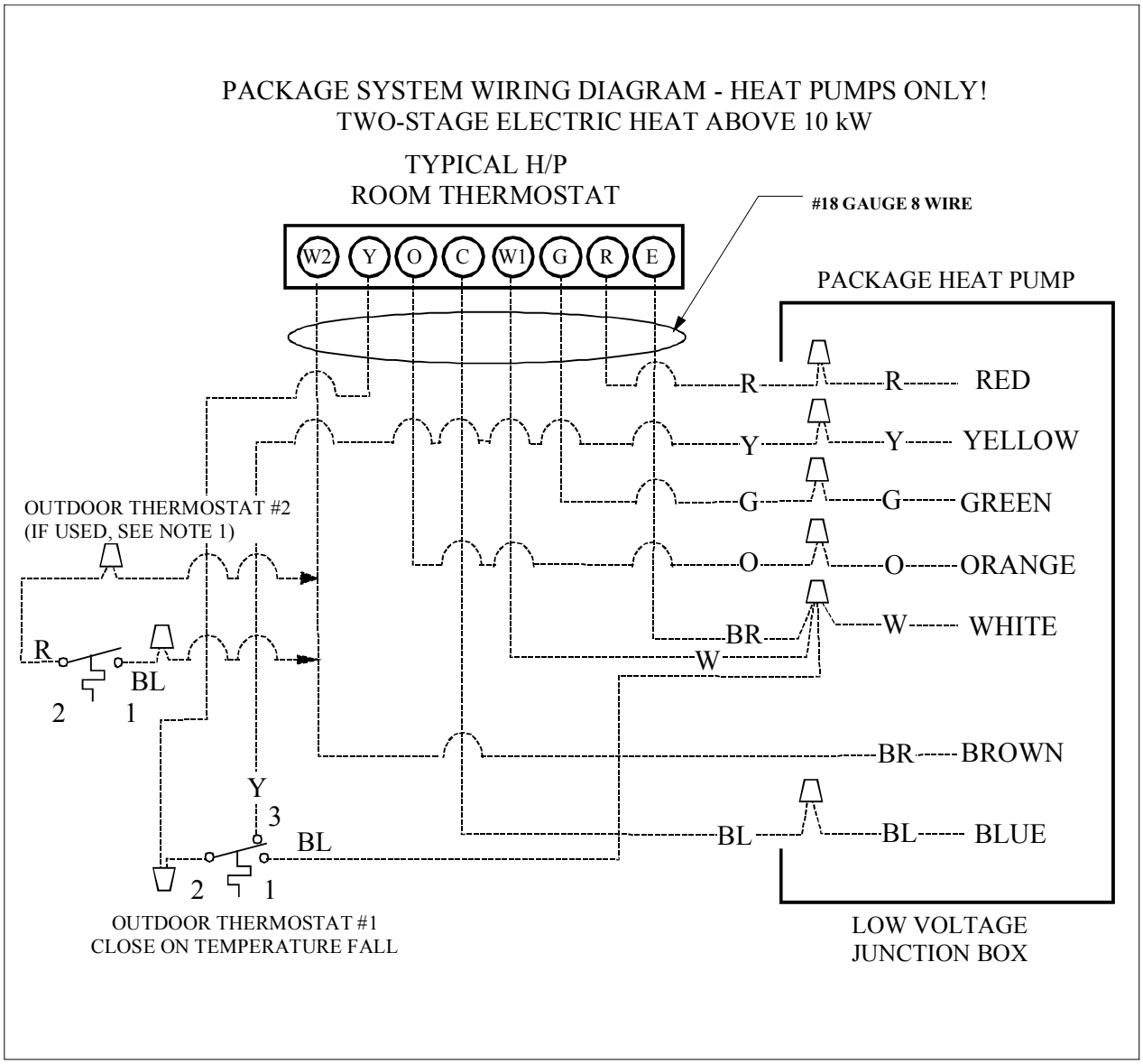

For outdoor temperatures below 0° F with 50% or higher relative humidity, set outdoor thermostat at 0° F

NOTE 1: OT18 #2 CAN BE CONNECTED BETWEEN W2 OF THERMOSTAT AND BROWN WIRE IF DESIRED.

COLOR CODES
R --RED
Y --YELLOW
BL-BLUE
BR-BROWN
O --ORANGE
W -WHITE
G --GREEN

OT18-60A OUTDOOR THERMOSTAT

Wiring is subject to change. Always refer to the wiring diagram on the unit for the most up-to-date wiring.

WARNING

HIGH VOLTAGE!
DISCONNECT ALL POWER BEFORE SERVICING OR INSTALLING THIS UNIT. MULTIPLE POWER SOURCES MAY BE PRESENT. FAILURE TO DO SO MAY CAUSE PROPERTY DAMAGE, PERSONAL INJURY OR DEATH.

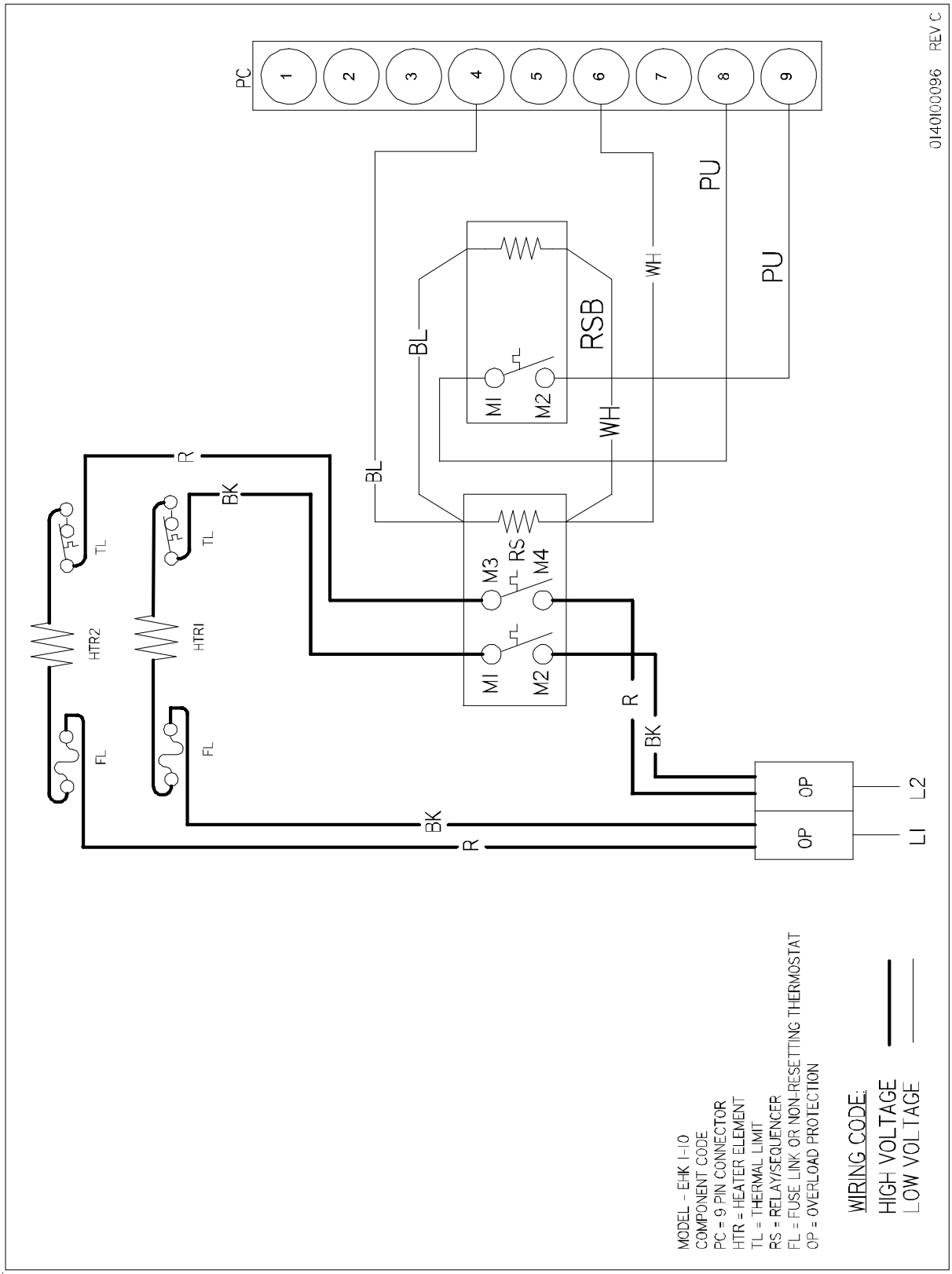

EHK1 - 10 HEAT KIT - 10 KW

Wiring is subject to change. Always refer to the wiring diagram on the unit for the most up-to-date wiring.

WARNING

HIGH VOLTAGE!
DISCONNECT ALL POWER BEFORE SERVICING OR INSTALLING THIS UNIT. MULTIPLE POWER SOURCES MAY BE PRESENT. FAILURE TO DO SO MAY CAUSE PROPERTY DAMAGE, PERSONAL INJURY OR DEATH.

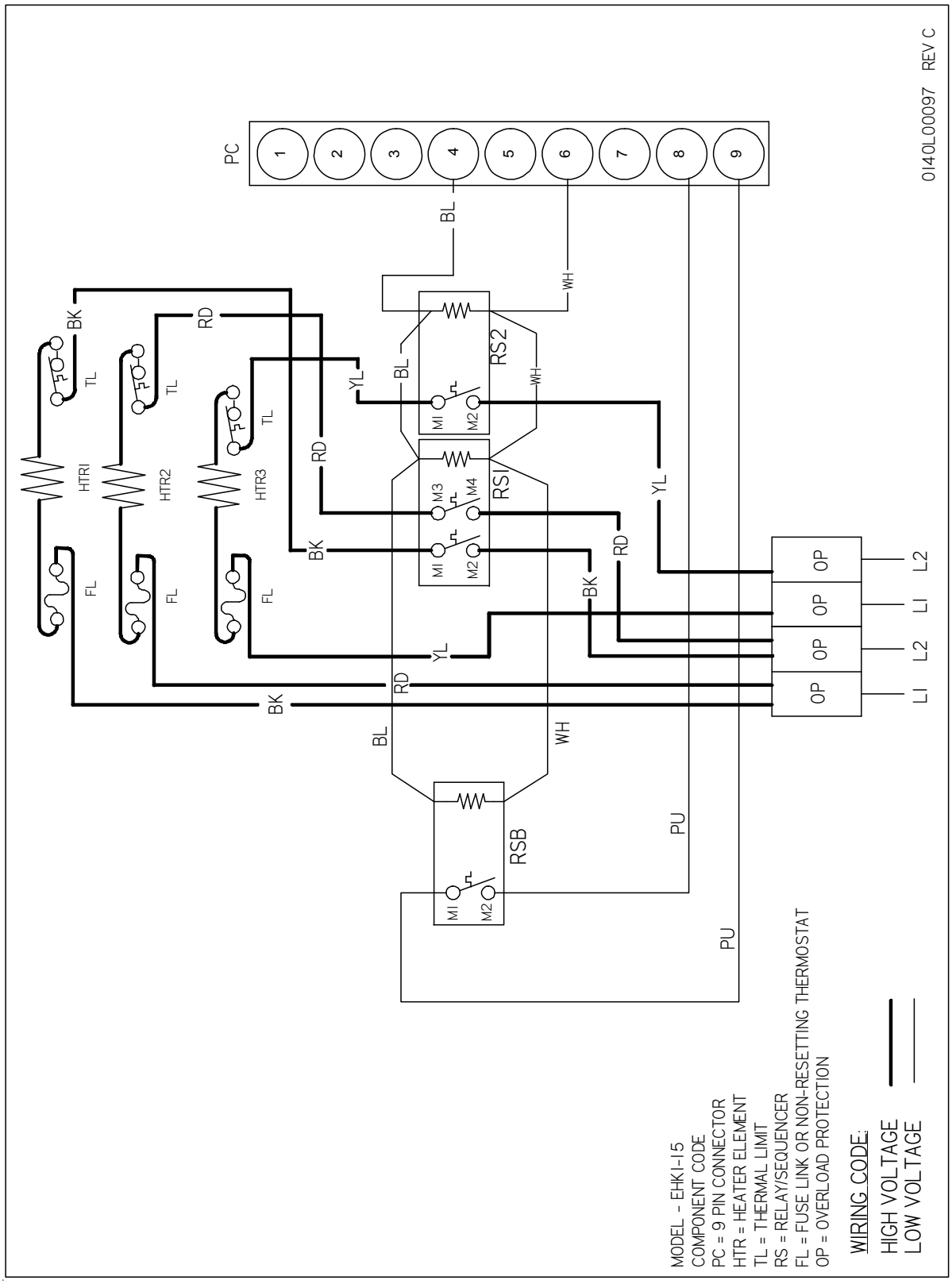

EHK1 - 15 HEAT KIT - 15 KW

Wiring is subject to change. Always refer to the wiring diagram on the unit for the most up-to-date wiring.

ACCESSORIES WIRING DIAGRAMS

EHK1-18

WARNING

HIGH VOLTAGE!
DISCONNECT ALL POWER BEFORE SERVICING OR INSTALLING THIS UNIT. MULTIPLE POWER SOURCES MAY BE PRESENT. FAILURE TO DO SO MAY CAUSE PROPERTY DAMAGE, PERSONAL INJURY OR DEATH.

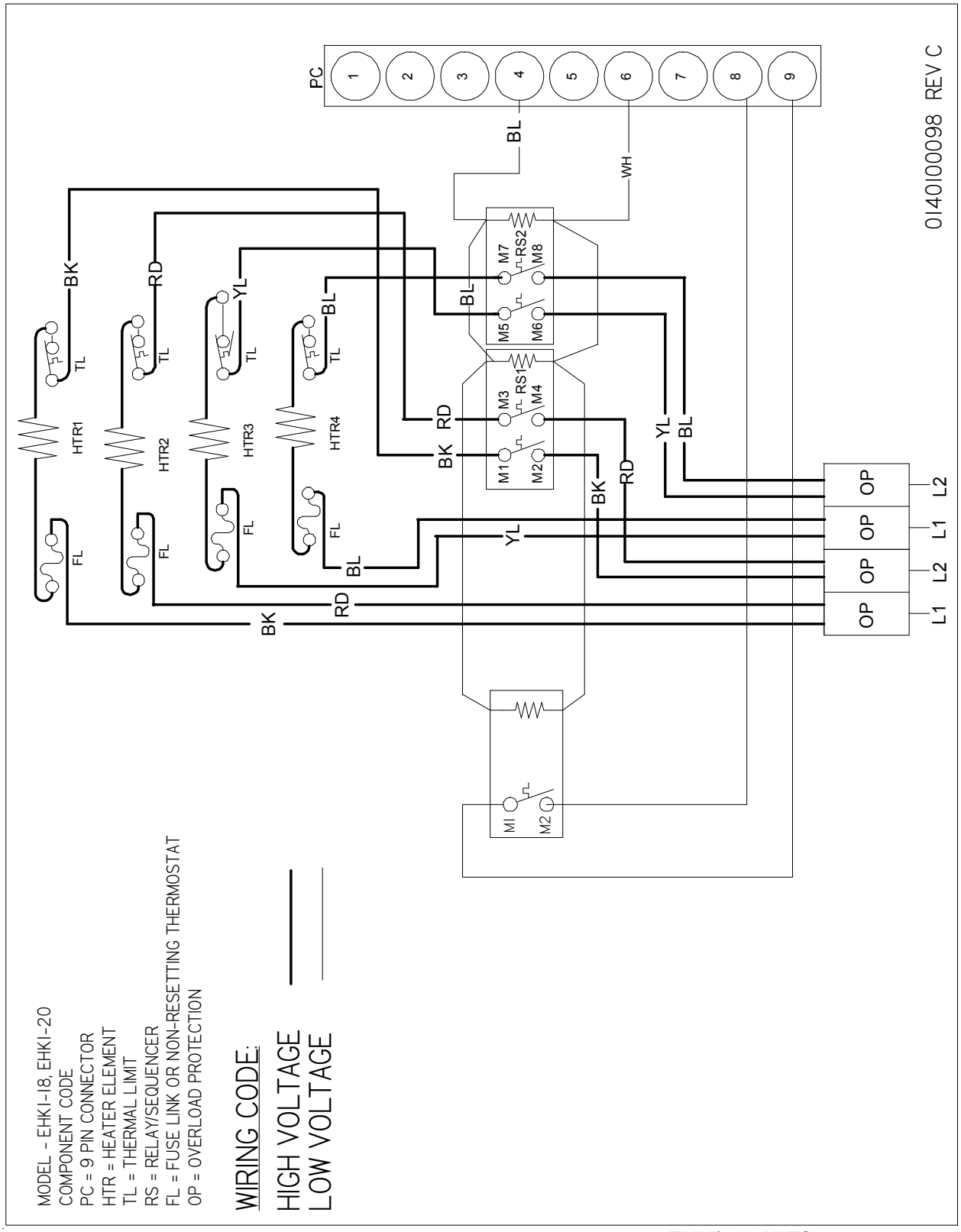

EHK1 - 18 HEAT KIT - 18 KW

EHK*-18 KITS
FOR USE WITH 4 TON UNITS ONLY.

Wiring is subject to change. Always refer to the wiring diagram on the unit for the most up-to-date wiring.

WARNING

HIGH VOLTAGE!
DISCONNECT ALL POWER BEFORE SERVICING OR INSTALLING THIS UNIT. MULTIPLE POWER SOURCES MAY BE PRESENT. FAILURE TO DO SO MAY CAUSE PROPERTY DAMAGE, PERSONAL INJURY OR DEATH.

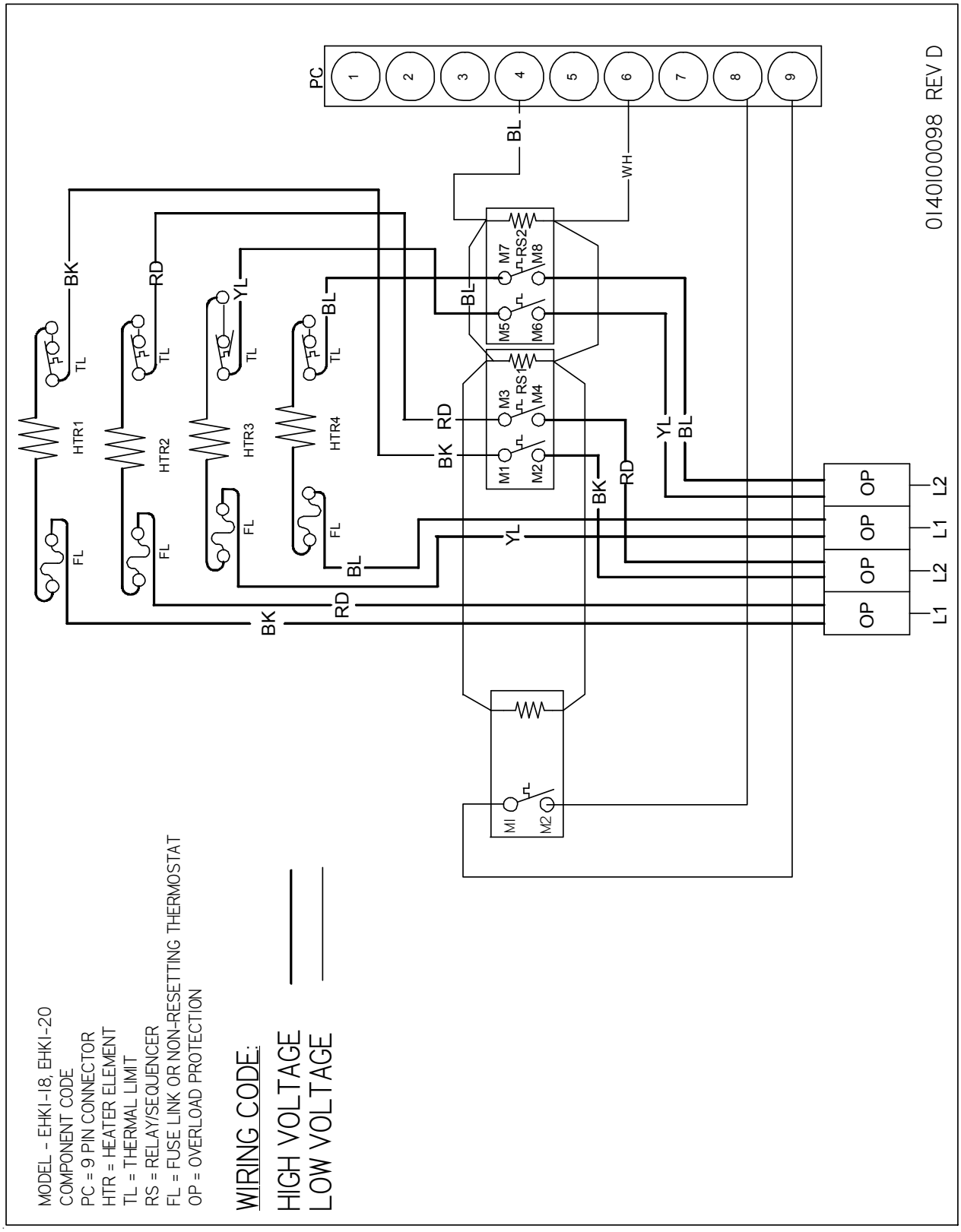

EHK1 - 20 HEAT KIT - 20 KW

Wiring is subject to change. Always refer to the wiring diagram on the unit for the most up-to-date wiring.

ACCESSORIES WIRING DIAGRAMS EHK*-10/EHK*-15/EHK*-16

WARNING

HIGH VOLTAGE!
DISCONNECT ALL POWER BEFORE SERVICING OR INSTALLING THIS UNIT. MULTIPLE POWER SOURCES MAY BE PRESENT. FAILURE TO DO SO MAY CAUSE PROPERTY DAMAGE, PERSONAL INJURY OR DEATH.

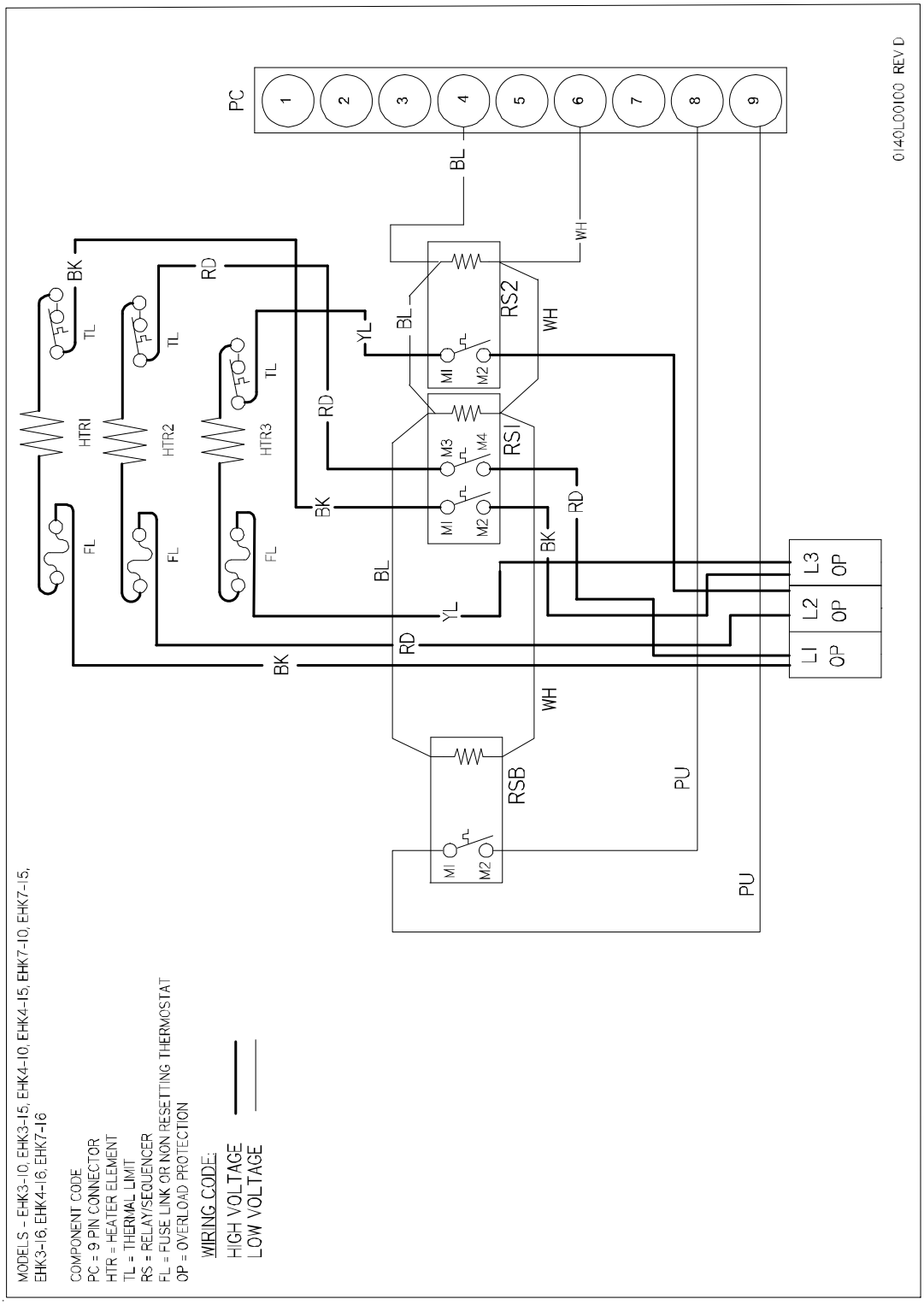

EHK3-10 HEAT KITS - 10 KW, EHK3-15 HEAT KITS - 15 KW **EHK3-16 HEAT KITS - 16 KW**

EHK4-10 HEAT KITS - 10 KW, EHK4-15 HEAT KITS - 15 KW **EHK4-16 HEAT KITS - 16 KW**

EHK7-10 HEAT KITS - 10 KW, EHK7-15 HEAT KITS - 15 KW **EHK7-16 HEAT KITS - 16 KW**

Wiring is subject to change. Always refer to the wiring diagram on the unit for the most up-to-date wiring.

WARNING

HIGH VOLTAGE!
DISCONNECT ALL POWER BEFORE SERVICING OR INSTALLING THIS UNIT. MULTIPLE POWER SOURCES MAY BE PRESENT. FAILURE TO DO SO MAY CAUSE PROPERTY DAMAGE, PERSONAL INJURY OR DEATH.

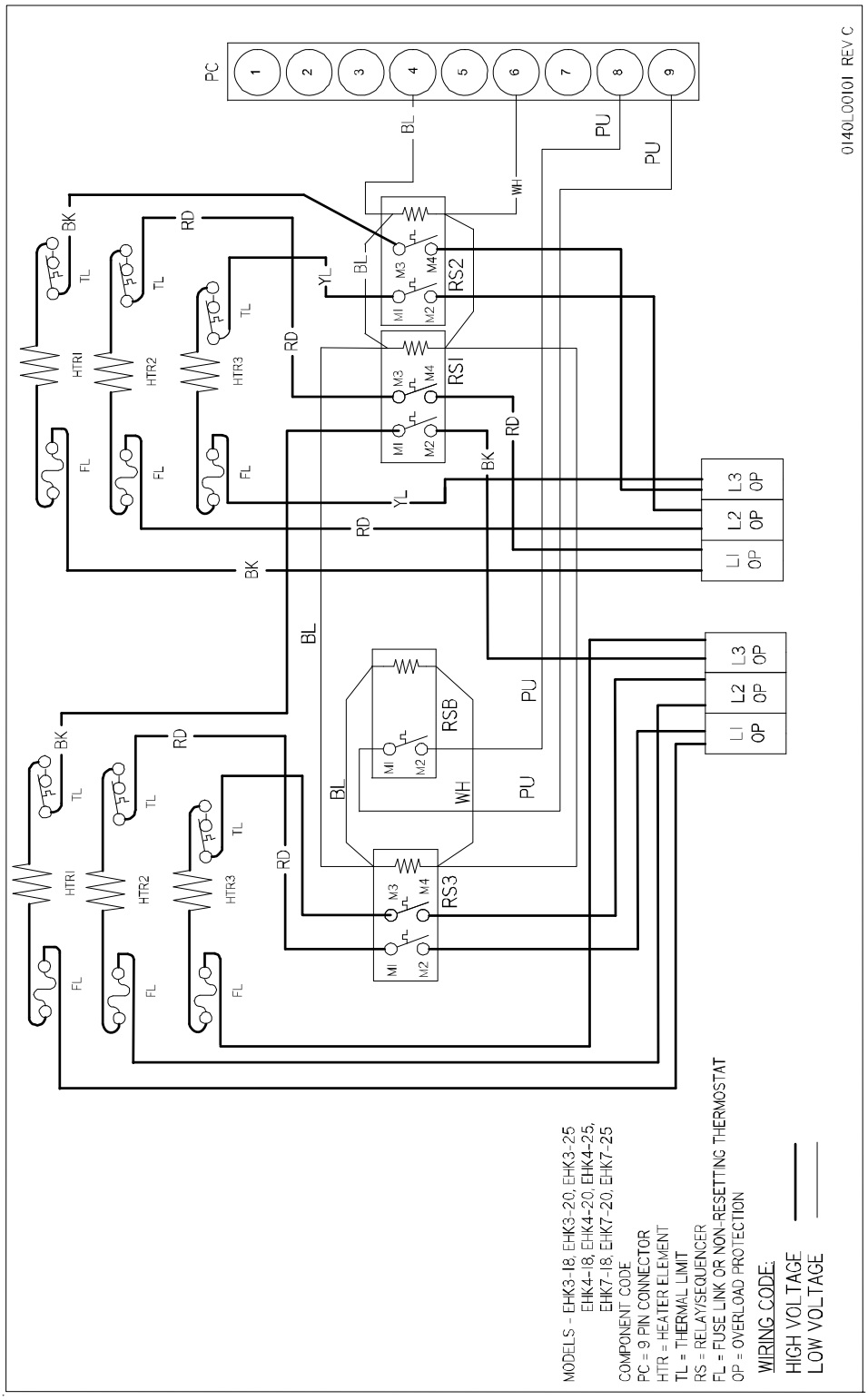

EHK3 - 18 HEAT KIT - 18 KW

EHK4 - 18 HEAT KIT - 18KW

EHK7 - 18 HEAT KIT - 18KW

EHK*-18 KITS

FOR USE WITH 4 TON UNITS ONLY.

Wiring is subject to change. Always refer to the wiring diagram on the unit for the most up-to-date wiring.

ACCESSORIES WIRING DIAGRAMS EHK[3, 4, 7]-20 & 25

WARNING

HIGH VOLTAGE!
DISCONNECT ALL POWER BEFORE SERVICING OR INSTALLING THIS UNIT. MULTIPLE POWER SOURCES MAY BE PRESENT. FAILURE TO DO SO MAY CAUSE PROPERTY DAMAGE, PERSONAL INJURY OR DEATH.

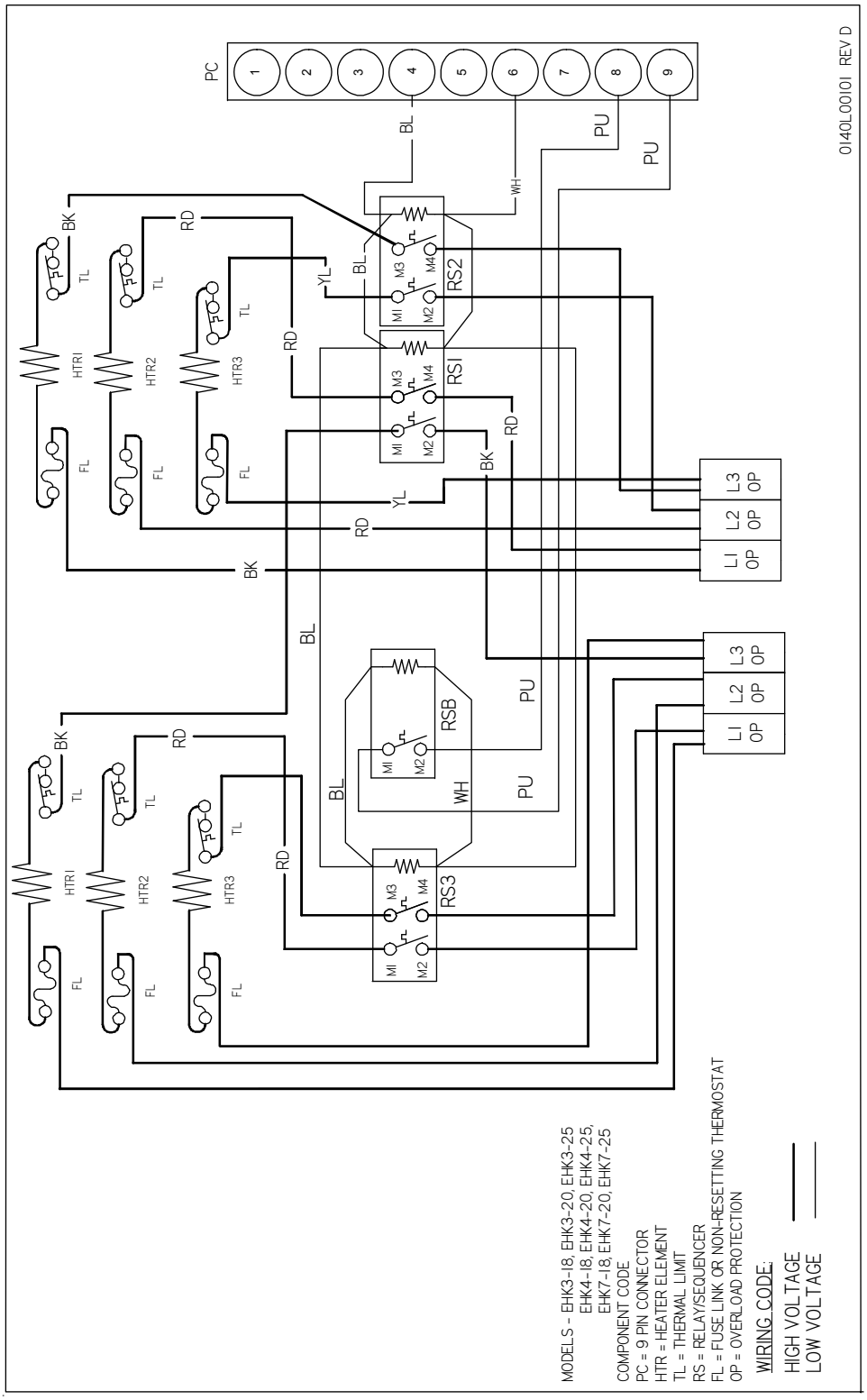

EHK3 - 20 HEAT KIT - 20 KW **EHK3 - 25 HEAT KIT - 25 KW**

EHK4 - 20 HEAT KIT - 20 KW **EHK4 - 25 HEAT KIT - 25 KW**

EHK7 - 20 HEAT KIT - 20 KW **EHK7 - 25 HEAT KIT - 25 KW**

Wiring is subject to change. Always refer to the wiring diagram on the unit for the most up-to-date wiring.

WARNING

HIGH VOLTAGE!
DISCONNECT ALL POWER BEFORE SERVICING OR INSTALLING THIS UNIT. MULTIPLE POWER SOURCES MAY BE PRESENT. FAILURE TO DO SO MAY CAUSE PROPERTY DAMAGE, PERSONAL INJURY OR DEATH.

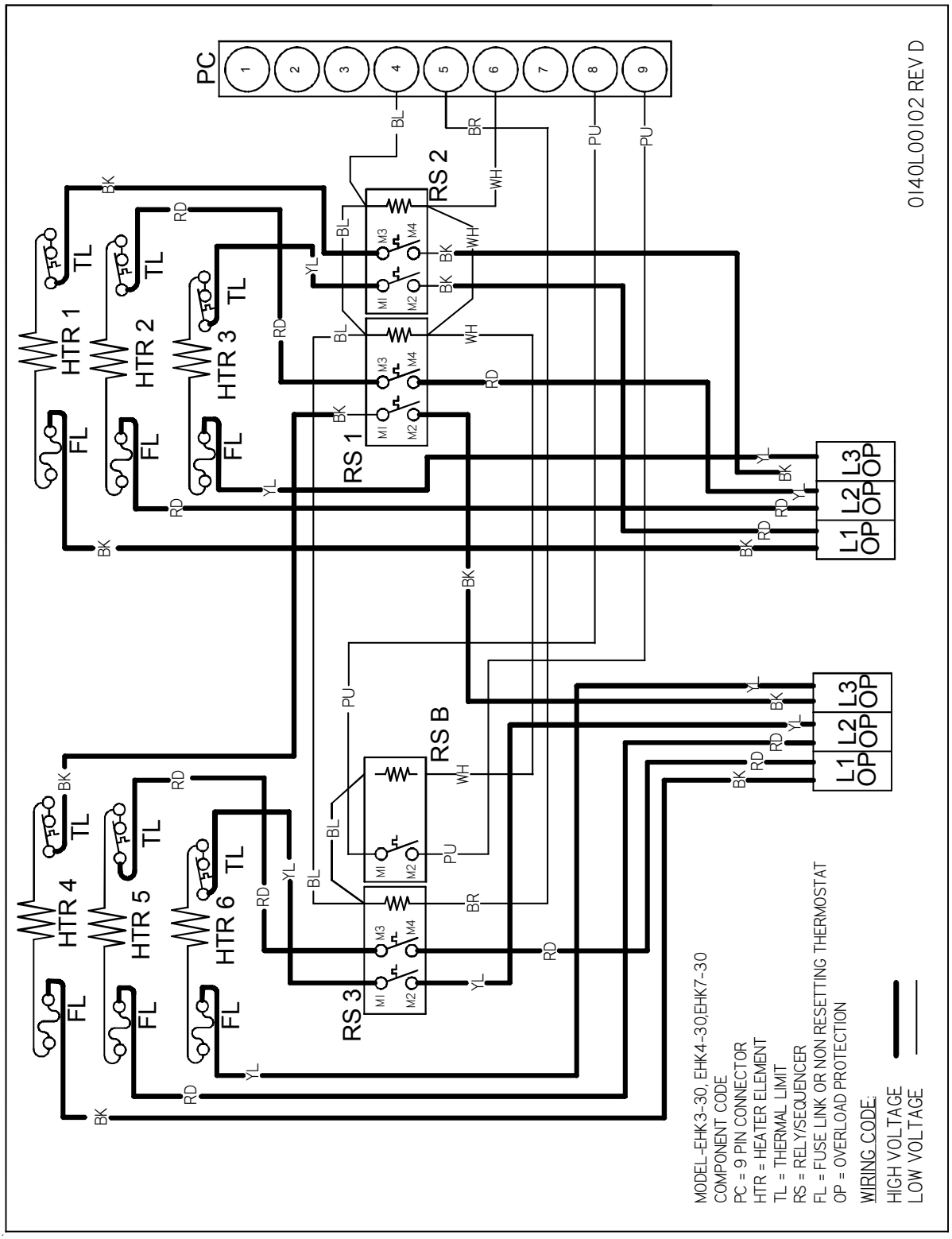

EHK3 - 30 HEAT KIT - 30 KW

EHK4 - 30 HEAT KIT - 30 KW

EHK7 - 30 HEAT KIT - 30 KW

Wiring is subject to change. Always refer to the wiring diagram on the unit for the most up-to-date wiring.

ACCESSORIES WIRING DIAGRAMS EHK[3, 4, 7]-45

WARNING

HIGH VOLTAGE!
DISCONNECT ALL POWER BEFORE SERVICING OR INSTALLING THIS UNIT. MULTIPLE POWER SOURCES MAY BE PRESENT. FAILURE TO DO SO MAY CAUSE PROPERTY DAMAGE, PERSONAL INJURY OR DEATH.

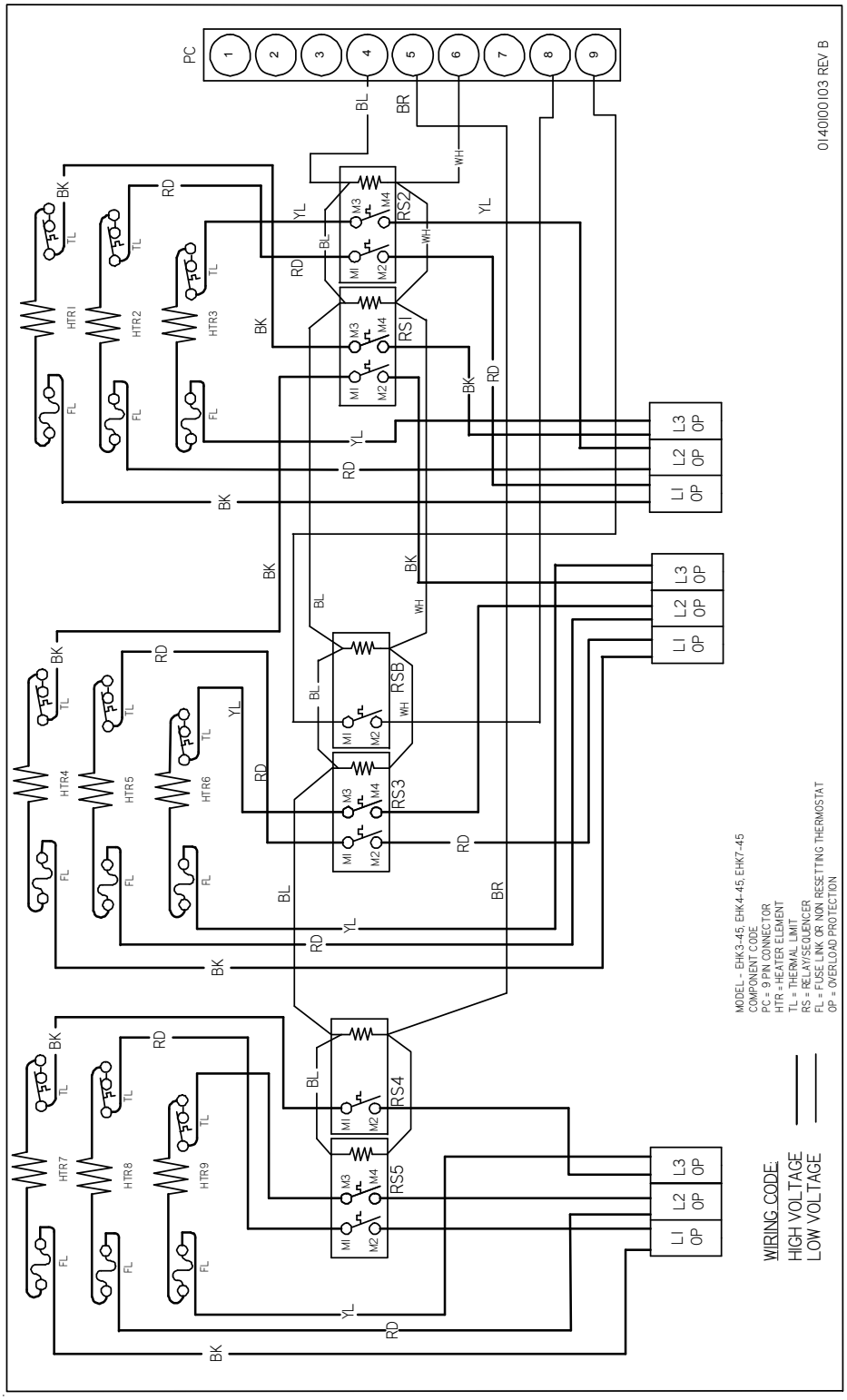

EHK3 - 45 HEAT KIT - 43 KW

EHK4 - 45 HEAT KIT - 43 KW

EHK7 - 45 HEAT KIT - 43 KW

Wiring is subject to change. Always refer to the wiring diagram on the unit for the most up-to-date wiring.

ACCESSORIES WIRING DIAGRAMS

WARNING

HIGH VOLTAGE!
DISCONNECT ALL POWER BEFORE SERVICING OR INSTALLING THIS UNIT. MULTIPLE POWER SOURCES MAY BE PRESENT. FAILURE TO DO SO MAY CAUSE PROPERTY DAMAGE, PERSONAL INJURY OR DEATH.

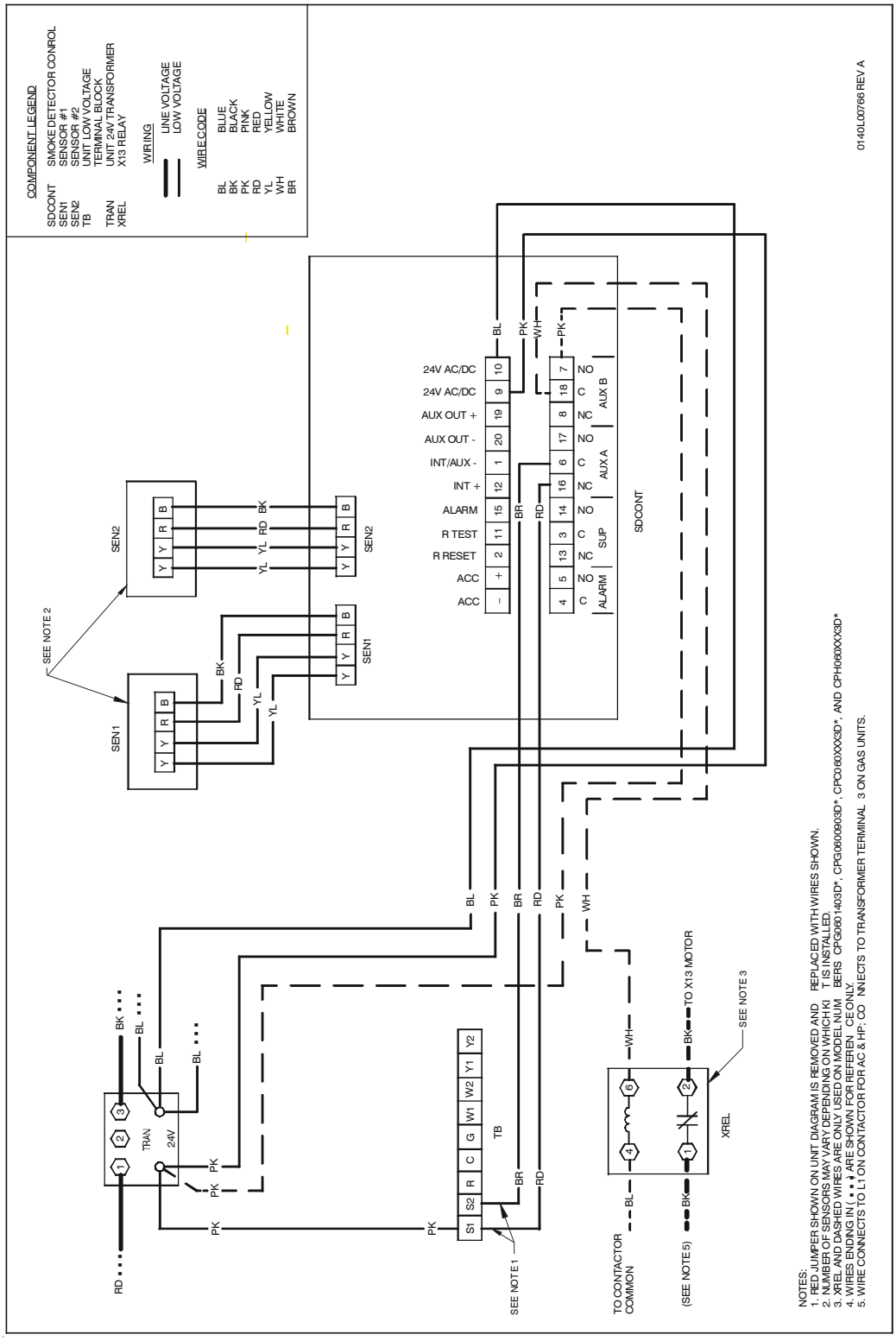

Smoke Detector

Wiring is subject to change. Always refer to the wiring diagram on the unit for the most up-to-date wiring.

ACCESSORIES WIRING DIAGRAMS

WARNING

HIGH VOLTAGE!
DISCONNECT ALL POWER BEFORE SERVICING OR INSTALLING THIS UNIT. MULTIPLE POWER SOURCES MAY BE PRESENT. FAILURE TO DO SO MAY CAUSE PROPERTY DAMAGE, PERSONAL INJURY OR DEATH.

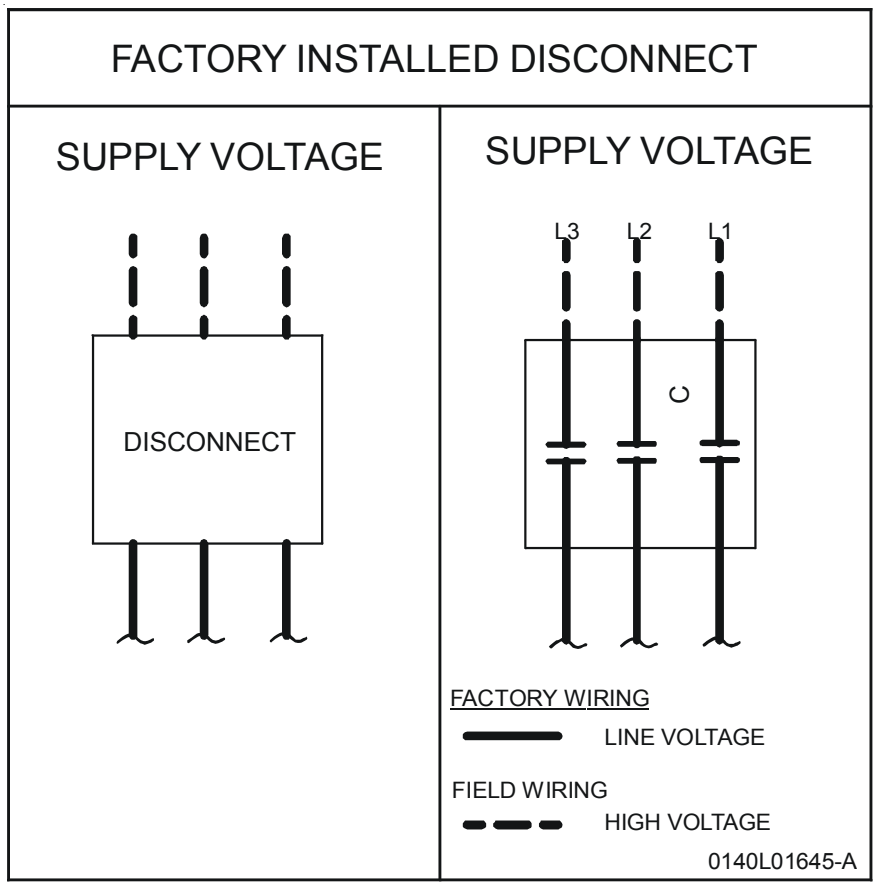

Disconnect Switch (non-fused)

Wiring is subject to change. Always refer to the wiring diagram on the unit for the most up-to-date wiring.

ACCESSORIES WIRING DIAGRAMS

WARNING

HIGH VOLTAGE!
DISCONNECT ALL POWER BEFORE SERVICING OR INSTALLING THIS UNIT. MULTIPLE POWER SOURCES MAY BE PRESENT. FAILURE TO DO SO MAY CAUSE PROPERTY DAMAGE, PERSONAL INJURY OR DEATH.

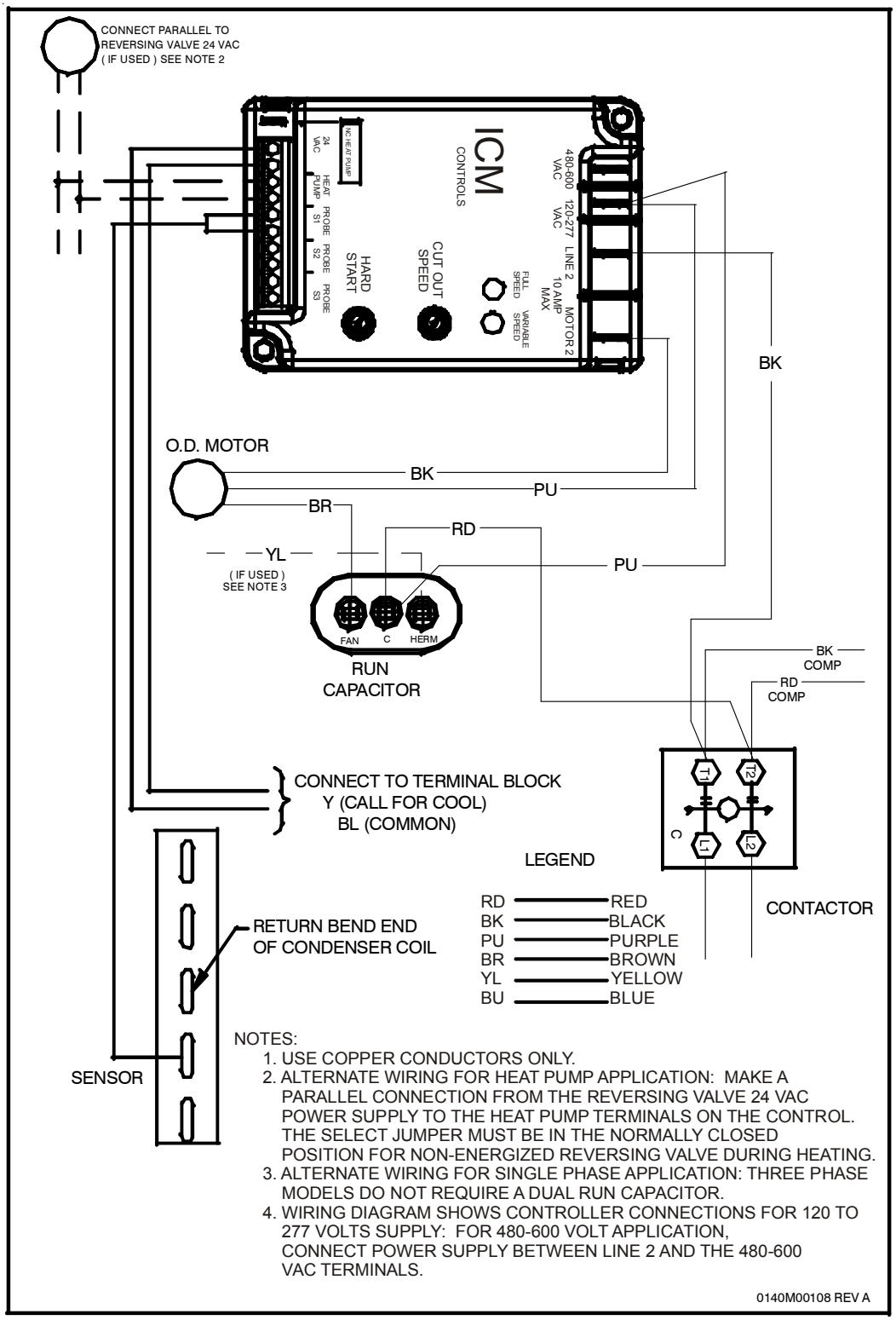

NOTICE: The cut out speed & hard start settings are factory preset. Changing those settings may cause early motor failure.

LOW AMBIENT FOR CPC/CPG 3 - 6 TON

Wiring is subject to change. Always refer to the wiring diagram on the unit for the most up-to-date wiring.

ACCESSORIES WIRING DIAGRAMS

WARNING

HIGH VOLTAGE!
DISCONNECT ALL POWER BEFORE SERVICING OR INSTALLING THIS UNIT. MULTIPLE POWER SOURCES MAY BE PRESENT. FAILURE TO DO SO MAY CAUSE PROPERTY DAMAGE, PERSONAL INJURY OR DEATH.

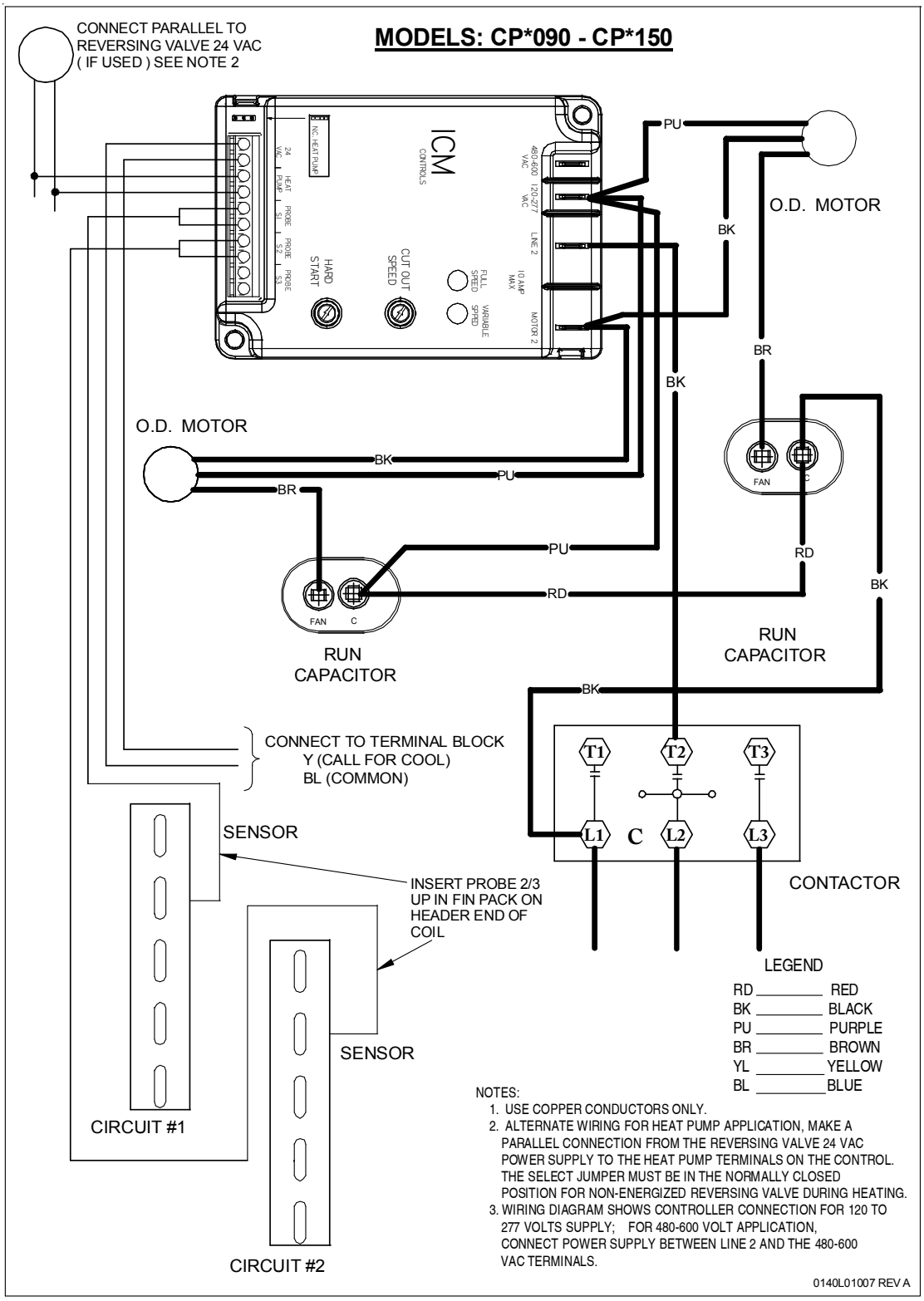

NOTICE: The cut out speed & hard start settings are factory preset. Changing those settings may cause early motor failure.

LOW AMBIENT for CPC/CPG 7.5 - 12.5 Ton

Wiring is subject to change. Always refer to the wiring diagram on the unit for the most up-to-date wiring.