Service and Troubleshooting

AVZC18 Inverter Heat Pump Condenser Units with R-410A Refrigerant Blowers, Coils, & Accessories

For service information related to the Bluetooth® Shared Data Loader BTSDL01 referenced in this manual, please refer to the installation instructions for the BTSDL01 at www.coolcloudhvac.com/loaderuserguide

Pride and workmanship go into every product to provide our customers with quality products. It is possible, however, that during its lifetime a product may require service. Products should be serviced only by a qualified service technician who is familiar with the safety procedures required in the repair and who is equipped with the proper tools, parts, testing instruments and the appropriate service manual. **REVIEW ALL SERVICE INFORMATION IN THE APPROPRIATE SERVICE MANUAL BEFORE BEGINNING REPAIRS.**

WARNING

ONLY PERSONNEL THAT HAVE BEEN TRAINED TO INSTALL, ADJUST, SERVICE OR REPAIR(HEREINAFTER, "SERVICE") THE EQUIPMENT SPECIFIED IN THIS MANUAL SHOULD SERVICE THE EQUIPMENT. THE MANUFACTURER WILL NOT BE RESPONSIBLE FOR ANY INJURY OR PROPERTY DAMAGE ARISING FROM IMPROPER SERVICE OR SERVICE PROCEDURES. IF YOU SERVICE THIS UNIT, YOU ASSUME RESPONSIBILITY FOR ANY INJURY OR PROPERTY DAMAGE WHICH MAY RESULT. IN ADDITION, IN JURISDICTIONS THAT REQUIRE ONE OR MORE LICENSES TO SERVICE THE EQUIPMENT SPECIFIED IN THIS MANUAL, ONLY LICENSED PERSONNEL SHOULD SERVICE THE EQUIPMENT. IMPROPER INSTALLATION, ADJUSTMENT, SERVICING OR REPAIR OF THE EQUIPMENT SPECIFIED IN THIS MANUAL, OR ATTEMPTING TO INSTALL, ADJUST, SERVICE OR REPAIR THE EQUIPMENT SPECIFIED IN THIS MANUAL WITHOUT PROPER TRAINING MAY RESULT IN PRODUCT DAMAGE, PROPERTY DAMAGE, PERSONAL INJURY OR DEATH.

TABLE OF CONTENTS

IMPORTANT INFORMATION..... 2
PRODUCT IDENTIFICATION 4
SYSTEM OPERATION..... 5
SERVICING..... 9
CHECKING VOLTAGE 9
CHECKING WIRING 9
CHECKING THERMOSTAT, WIRING 9
THERMOSTAT AND WIRING 9
CHECKING TRANSFORMER AND CONTROL CIRCUIT 9
CHECKING HIGH PRESSURE SWITCH 10
CHECKING INDOOR AND OUTDOOR HI/LOW PRESSURE SENSOR..... 10
CHECKING COMPRESSOR 10
COMPRESSOR WINDING INSULATION TEST 11
GROUND TEST 11
TESTING TEMPERATURE SENSORS AND EEV COIL RESISTANCE..... 12
TESTING EEV COIL RESISTANCE 12
TESTING REVERSING VALVE..... 12
AVPEC* HEATER CONTROL..... 13
NETWORK TROUBLESHOOTING 13
REFRIGERATION REPAIR PRACTICE 14
LEAK TESTING (NITROGEN OR NITROGEN-TRACED) 14
STANDING PRESSURE TEST (RECOMMENDED). 15
EVACUATION 15
CHARGING..... 16
FINAL CHARGE ADJUSTMENT 16
CHECKING COMPRESSOR EFFICIENCY 16
CHECKING SUBCOOLING 17
NON-CONDENSABLES..... 17
COMPRESSOR BURNOUT 18
REFRIGERANT PIPING 18

RS6215003r1
July 2021

Copyright © 2021 Goodman Manufacturing Company, L.P.

Amana is a registered trademark of Maytag Corporation or its related companies and is used under license.
All rights reserved.

IMPORTANT INFORMATION

DUCT STATIC PRESSURES AND/OR STATIC PRESSURE DROP ACROSS COILS 22
AIR HANDLER EXTERNAL STATIC 22
COIL STATIC PRESSURE DROP 22
INDOOR UNIT TROUBLESHOOTING 23
DIAGNOSTIC CODES 25
AIR HANDLER TROUBLESHOOTING MATRIX..... 26
AIR HANDLER DISPLAY 28
SETTING THE MODE DISPLAY 36
7 - SEGMENT DISPLAY..... 42
TROUBLESHOOTING 45
WIRING DIAGRAMS..... 58
ACCESSORIES 60
CHECKING HEATER LIMIT CONTROL(S) (OPTIONAL ELECTRIC HEATERS) 61
ELECTRIC HEATER OPTIONAL ITEM 61
CHECKING HEATER FUSE LINK (OPTIONAL ELECTRIC HEATERS)..... 62

IMPORTANT NOTICES

RECOGNIZE SAFETY SYMBOLS, WORDS AND LABELS

Pride and workmanship go into every product to provide our customers with quality products. It is possible, however, that during its lifetime a product may require service. Products should be serviced only by a qualified service technician who is familiar with the safety procedures required in the repair and who is equipped with the proper tools, parts, testing instruments and the appropriate service manual. **REVIEW ALL SERVICE INFORMATION IN THE APPROPRIATE SERVICE MANUAL BEFORE BEGINNING REPAIRS.**

WARNING

HIGH VOLTAGE
Disconnect ALL power before servicing or installing this unit. Multiple power sources may be present. Failure to do so may cause property damage, personal injury or death.

WARNING

Do not connect to or use any device that is not designed certified by the manufacturer for use with this unit. Serious property damage, personal injury reduced unit performance and/or hazardous conditions mat result from the use of such non-approved devices.

WARNING

To prevent the risk of property damage, personal injury, r death, do not store combustible materials or use gasoline or other flammable liquids or vapors in the vicinity of this appliance.

Notice: Inverter H/P models can only be matched with an AVPEC* air handler pr TXV-V expansion valve kit. Damage resulting from operation with any other combination is not covered by the warranty.**

SAFE REFRIGERANT HANDLING

While these items will not cover every conceivable situation, they should serve as a useful guide.

WARNING

Refrigerant are heavier than air. They can "push out" the oxygen in your lungs or in any enclosed space. To avoid possible difficulty in breathing or death.

- **Never purge refrigerant into an enclosed room or space. By law, all refrigerants must be reclaimed.**
- **If an indoor leak is suspected, thoroughly ventilate the area before beginning work.**
- **Liquid refrigerant can be very cold. To avoid possible frost bite or blindness, avoid contact and wear gloves and goggles. If liquid refrigerant does contact your skin or eyes, seek medical help immediately.**
- **Always follow EPA regulations. Never burnt refrigerant, as poisonous gas will be produced.**

WARNING

The United States Environmental Protection Agency ("EPA") has issued various regulations regarding the introduction and disposal of refrigerants introduced into this unit. Failure to follow these regulations may harm the environment and can lead to the imposition of substantial fines. These regulations may vary by jurisdiction. Should questions arise, contact your local EPA office.

OUTSIDE THE U.S., **call 1-713-861-2500**.
(Not a technical assistance line for dealers.) Your telephone company will bill you for the call.

IMPORTANT INFORMATION

WARNING

To avoid possible explosion:

- Never apply flame or steam to a refrigerant cylinder. If you must heat a cylinder for faster charging, partially immerse it in warm water.
- Never fill a cylinder more than 80% full of liquid refrigerant.
- Never add anything other than R-22 to an R-22 cylinder or R-410A to an R-410A cylinder. The service equipment used must be listed or certified for the type of refrigerant used.
- Store cylinders in a cool, dry place. Never use a cylinder as a platform or a roller.

WARNING

To avoid possible explosion:

- Use only returnable (not disposable) service cylinders when removing refrigerant from a system.
- Ensure the cylinder is free of damage which could lead to a leak or explosion.
- Ensure the hydrostatic test date does not exceed 5 years.
- Ensure the pressure rating meets or exceeds 400 lbs.

When in doubt, do not use cylinder.

WARNING

To avoid possible injury, explosion or death, practice safe handling of refrigerants.

CAUTION

The compressor PVE oil for R-410A units is extremely susceptible to moisture absorption and could cause compressor failure. Do not leave system open to atmosphere any longer than necessary for installation.

NOTICE: The entire system (combination of indoor and outdoor sections) must be manufacturer approved and Air-Conditioning, Heating, and Refrigeration Institute (AHRI) listed.

NOTE: Installation of unmatched systems is not permitted. Damage or repairs due to installation of unmatched systems is not covered under the warranty.

WARNING

System contaminants, improper service procedure and/or physical abuse affecting hermetic compressor electrical terminals may cause dangerous system venting.

NOTICE:
When the outdoor unit is connected to main power, the inverter board has a small current flowing into it to be prepared for operation when needed. Due to this, the Control Board components have to be cooled even when the unit is not running. For this cooling operation, the condenser fan may come on at any time, including in the winter months. Any obstruction to the outdoor fan should be avoided at all times when the unit is powered to prevent damage.

The successful development of hermetically sealed refrigeration compressors has completely sealed the compressor's moving parts and electric motor inside a common housing, minimizing refrigerant leaks and the hazards sometimes associated with moving belts, pulleys or couplings.

Fundamental to the design of hermetic compressors is a method whereby electrical current is transmitted to the compressor motor through terminal conductors which pass through the compressor housing wall. These terminals are sealed in a dielectric material which insulates them from the housing and maintains the pressure tight integrity of the hermetic compressor. The terminals and their dielectric embedment are strongly constructed, but are vulnerable to careless compressor installation or maintenance procedures and equally vulnerable to internal electrical short circuits caused by excessive system contaminants.

In either of these instances, an electrical short between the terminal and the compressor housing may result in the loss of integrity between the terminal and its dielectric embedment. This loss may cause the terminals to be expelled, thereby venting the vaporous and liquid contents of the compressor housing and system.

A venting compressor terminal normally presents no danger to anyone, providing the terminal protective cover is properly in place.

If, however, the terminal protective cover is not properly in place, a venting terminal may discharge a combination of

a. hot lubricating oil and refrigerant
b. flammable mixture (if system is contaminated with air)

in a stream of spray which may be dangerous to anyone in the vicinity. Death or serious bodily injury could occur.

Under no circumstances is a hermetic compressor to be electrically energized and/or operated without having the terminal protective cover properly in place.

See Service Section for proper servicing.

A	V	Z	C	18	036	1	AA
1	2	3	4	5,6	7,8,9	10	11,12

Brand

A Amana® Brand

Product Category

S Split System

V Inverter Split System

Unit Type

X Condenser R-410A

Z Heat Pump R-410A

Communication Feature

C Integrated Communicating ComfortBridge™ Technology

Efficiency

16 16 SEER 18 18 SEER 20 20 SEER

Capacity

024 2 Tons 048 4 Tons

036 3 Tons 060 5 Tons

Electrical

1 - 208/230 V, 1 Phase, 60 Hz

Engineering *

Major/ Minor Revisions

* Not used for order or inventory control

A	V	P	E	C	25	B	1	4	AA
1	2	3	4	5	6,7	8	9	10	11,12

Brand

A Single-Piece Air Handler

Unit Application

R Multi Position PSC Motor

S Multi Position EEM Motor

V Multi Position Variable-Speed Motor- Communicating

Cabinet Finish

U Unpainted

P Painted

Expansion Device

E Electronic Expansion Valve

T Expansion Device

V Inverter Tuned Expansion Valve

Communicating

C = Integrated Communicating ComfortBridge™ Technolgy

Nominal Capacity @ 13 SEER

24 = 2 Tons 31 = 2½ Tons 48 = 4 Tons

25 = 2 Tons 36 = 3 Tons 49 =3-3½ Tons

29 = 2 Tons 37 = 3½ Tons 59 = 4-5 Tons

30 = 2½ Tons 42 = 3½ Tons 60 = 5 Tons

61 = 4-5 Tons

Cabinet Width

B = 17½"

C = 21"

D = 24½"

Electrical

1 208/230V, 1 Phase, 60 Hz

Refrigerant Charge

4 = R-410A

Engineering*

Major/Minor Revisions

*Not used for inventory management

SYSTEM OPERATION

This section gives a basic description of heat pump condenser unit operation, its various components and their basic operation. Ensure your system is properly sized for heat gain and loss according to methods of the Air Conditioning Contractors Association (ACCA) or equivalent.

CONDENSING UNIT

The ambient air is pulled through the heat pump condenser coil by a direct drive propeller fan. This air is then discharged out of the top of the cabinet. These units are designed for free air discharge, so no additional resistance, like duct work, shall be attached.

The gas and liquid line connections on present models are of the sweat type for field piping with refrigerant type copper. Front seating valves are factory installed to accept the field run copper. The total refrigerant charge for a normal installation is factory installed in the heat pump condenser unit.

AVZC18 models are available in 2 through 5 ton sizes and use R-410A refrigerant. They are designed for 208/230 volt single phase applications.

All AVZC18 models use a Daikin rotary compressor specifically designed for R-410A refrigerant.

AVZC18 models use “FVC50K” which is NOT compatible with mineral oil based lubricants like 3GS. “FVC50K” oil (required by the manufacturer) must be used if additional oil is required.

COOLING

The refrigerant used in the system is R-410A. It is a clear, colorless, non-toxic and non-irritating liquid. R-410A is a 50:50 blend of R-32 and R-125. The boiling point at atmospheric pressure is -62.9°F.

A few of the important principles that make the refrigeration cycle possible are: heat always flows from a warmer to a cooler body. Under lower pressure, a refrigerant will absorb heat and vaporize at a low temperature. The vapors may be drawn off and condensed at a higher pressure and temperature to be used again.

The indoor evaporator coil functions to cool and dehumidify the air conditioned spaces through the evaporative process taking place within the coil tubes.

NOTE: The pressures and temperatures shown in the refrigerant cycle illustrations on the following pages are for demonstration purposes only. Actual temperatures and pressures are to be obtained from the “Expanded Performance Chart”.

Liquid refrigerant at condensing pressure and temperatures leaves the outdoor condensing coil through the drier and is metered into the indoor coil through indoor electronic expansion valve. As the cool, low pressure, saturated refrigerant enters the tubes of the indoor coil, a portion of the liquid immediately vaporizes. It continues to soak up heat and vaporizes as it proceeds through the coil, cooling the indoor coil down to about 48°F.

Heat is continually being transferred to the cool fins and tubes of the indoor evaporator coil by the warm system air. This warming process causes the refrigerant to boil. The heat removed from the air is carried off by the vapor.

As the vapor passes through the last tubes of the coil, it becomes superheated. That is, it absorbs more heat than is necessary to vaporize it. This is assurance that only dry gas will reach the compressor. Liquid reaching the compressor can weaken or break compressor valves.

The compressor increases the pressure of the gas, thus adding more heat, and discharges hot, high pressure superheated gas into the outdoor condenser coil.

In the condenser coil, the hot refrigerant gas, being warmer than the outdoor air, first loses its superheat by heat transferred from the gas through the tubes and fins of the coil.

The refrigerant now becomes saturated, part liquid, part vapor and then continues to give up heat until it condenses to a liquid alone. Once the vapor is fully liquefied, it continues to give up heat which subcools the liquid, and it is ready to repeat the cycle.

The inverter system can stop the compressor or outdoor fan to protect the unit. The inverter system can run higher compressor speed than required from thermostat to recover compressor oil that flows.

HEATING

The heating portion of the refrigeration cycle is similar to the cooling cycle. By de-energizing the reversing valve solenoid coil, the flow of the refrigerant is reversed. The indoor coil now becomes the heat pump condenser coil, and the outdoor coil becomes the evaporator coil. The check valve at the outdoor coil will be forced closed by the refrigerant flow, thereby utilizing the outdoor expansion device. An electronic expansion valve meters the condensed refrigerant to the outdoor coil.

DEFROST CYCLE

The defrosting of the outdoor coil is controlled by the PCB and the outdoor coil temperature thermistor and defrost sensor. The outdoor coil temperature thermistor (Tm) sensor is clamped to a return bend entering the outdoor coil and the defrost sensor at bottom flowrator leg at outdoor coil outlet. Defrost timing periods of 30, 60, 90 or 120 minutes may be selected via the thermostat setting. PCB will initiate time defrost at the interval selected from the thermostat. During operation, the microprocessor on the PCB checks the coil and defrost temperature (Tm and Tb) via sensors every 5 seconds in heating mode. When the PCB detects the coil temperature to be high enough (approximately 54°F) and defrost sensor more than 43°F for 30 seconds, the defrost cycle is terminated and the timing period is reset.

SYSTEM OPERATION

SYSTEM STARTUP TEST

A system verification test is now required to check the equipment settings and functionality.

18 SEER Inverter units are tested by any of the following methods:

- Setting the “SUt” menu (System verification test) to ON through the indoor unit control board push buttons.
- Setting the System verification test menu of mode display screen-4 to ON through the outdoor unit control board push buttons.

Once selected, it checks the equipment for approximately 5 - 15 minutes. System test may exceed 15 minutes if there is an error. Refer to the Troubleshooting section, if error code appears.

Before starting the SYSTEM TEST, turn off the electric heater (if applicable)

NOTE: If the unit is attempting to run SYSTEM TEST in under 20°F ambient temperature, the unit may not be able to complete the test due to low suction pressure. In such a case, re-run the SYSTEM TEST when the ambient temperature exceeds 20°F.

CHARGE MODE

CHARGE mode allows for charging of the system.
System operates for a duration of approximately one hour while the equipment runs at full capacity.
After one hour, the CHARGE MODE ends and the system resumes normal operation.
Before starting the CHARGE MODE, turn off the Cool or Heat mode and electric heat (if applicable).

a. 18 SEER Inverter units are charged by any of the following methods:
   - setting the “CR9” menu (Charge Mode) to ON through the indoor unit control board push buttons.
   - setting the Charge mode menu of mode display screen-4 to ON through the outdoor unit control board push buttons.
   - Through the CoolCloud HVAC phone application.
b. The System will remain in charge mode (high speed) for 60 minutes before timing out.
c. Manually shut off.

BOOST MODE

BOOST MODE enables the system to operate at a higher compressor speed than rated maximum compressor speed and satisfy the structural load more effectively during higher ambient outdoor conditions. BOOST MODE is initiated by an outdoor temperature sensor located in the outdoor unit. Please note that outdoor equipment operational sound levels may increase while the equipment is running in BOOST MODE. Disabling BOOST MODE will provide the quietest and most efficient operation.

DEHUMIDIFICATION

NOTE: For regions with high humidity, it is strongly recommend to use a thermostat with humidity sensor and dehumidification terminal.

Without this type of thermostat, dehumidification operation does not work.

Dehumidification requires a thermostat capable of reading the indoor humidity level and allowing the user to set a dehumidification target.

The thermostat controls the humidity level of the conditioned space using the cooling system. Dehumidification is engaged whenever a cooling demand is present and humidity levels are above the target level.

When this condition exists, the circulating fan output is reduced, increasing system run time, over cooling the evaporator coil and ultimately removing more humidity from the structure than if only in cooling mode.

The thermostat may also allow for an additional overcooling limit setting depending on the thermostat utilized. This allows the cooling system to further reduce humidity by lowering the temperature below the cooling setpoint in an attempt to better achieve desired humidity levels.

DEHUMIDIFICATION TIPS

For effective dehumidification operation:

- Ensure “Dehumidification selection” is NOT set to “OFF”.
- Verify the cooling airflow profile is set to “Profile D”.
  - See the Cool Set-up section of the Installation Manual for complete airflow profile details.
  - By default, “Dehumidification selection” is standard and the cooling airflow profile is set to “Profile D”.
- For additional dehumidification control, airflow settings are field adjustable and can be fine-tuned to a value that is comfortable for the application from a range of Cool Airflow Trim.

COMFORTBRIDGE™ SYSTEM

OVERVIEW

The ComfortBridge based inverter heating and air conditioning system uses an indoor unit and outdoor unit digitally communicating with one another via a two-way communications path. ComfortBridge is compatible with any 24 VAC single stage thermostat which send inputs to the indoor unit.

SYSTEM OPERATION

COMFORTBRIDGE SYSTEM ADVANCED FEATURES

The ComfortBridge system permits access to system information, advanced set-up features, and advanced diagnostic/troubleshooting features via the control board push buttons or the CoolCloud HVAC app.

FAULT CODE HISTORY

The heat pump's diagnostics menu provides access to the most recent faults. The six most recent faults can be accessed through the control board seven segment displays. Any consecutively repeated fault is stored a maximum of three times.

EXAMPLE: A leak in the system, low refrigerant charge or an incompletely open stop valve can cause the unit to flash error code E15. This error code suggests that the unit is experiencing operation at low pressure. The control will only store this fault the first three consecutive times the fault occurs.

NOTE: The fault list can be cleared after performing maintenance or servicing the system to assist in the troubleshooting process.

DEVICE STATUS

This menu displays information about the systems current status. This menu can be utilized to confirm correct functionality of the equipment and for troubleshooting purposes.

The following items will be displayed:

- Heat Capacity Request Percentage
- Cool Capacity Request Percentage
- Heat Capacity Request During Defrost Percentage
- Dehumidification Request Percentage
- Reversing Valve Status
- Reported Airflow by Indoor Unit
- Boost Mode
- Previous Defrost Run Time

SENSOR DATA

The following sensor values will be displayed:

- Outdoor Temperature
- Coil Temperature
- Liquid Line Temperature
- Discharge Temperature
- Defrost Sensor
- Suction Pressure

PUMP DOWN / CHARGE MODE

This function can be enabled in this menu.

COOL SET-UP

The system allows for the adjustment of several cooling performance variables. Cool Airflow Trim (*1), Cool Airflow Profiles, Cool Fan ON Delay, Cool Fan OFF Delay and Dehumidification Select (some enable option or off) can be adjusted in this menu. You can also reset this entire menu to factory default settings. See the following images showing the four cooling airflow profiles.

NOTE: For regions with high humidity, it is strongly recommend to use a thermostat with humidity sensor and dehumidification terminal. Without this type of thermostat, dehumidification operation does not work.

Dehumidification requires a thermostat capable of reading the indoor humidity level and allowing the user to set a dehumidification target.

The thermostat controls the humidity level of the conditioned space using the cooling system. Dehumidification is engaged whenever a cooling demand is present and humidity levels are above the target level.

When this condition exists, the circulating fan output is reduced, increasing system run time, over cooling the evaporator coil and ultimately removing more humidity from the structure than if only in cooling mode.

The thermostat may also allow for an additional overcooling limit setting depending on the thermostat utilized. This allows the cooling system to further reduce humidity by lowering the temperature below the cooling setpoint in an attempt to better achieve desired humidity levels.

SYSTEM OPERATION
COOLING CYCLE

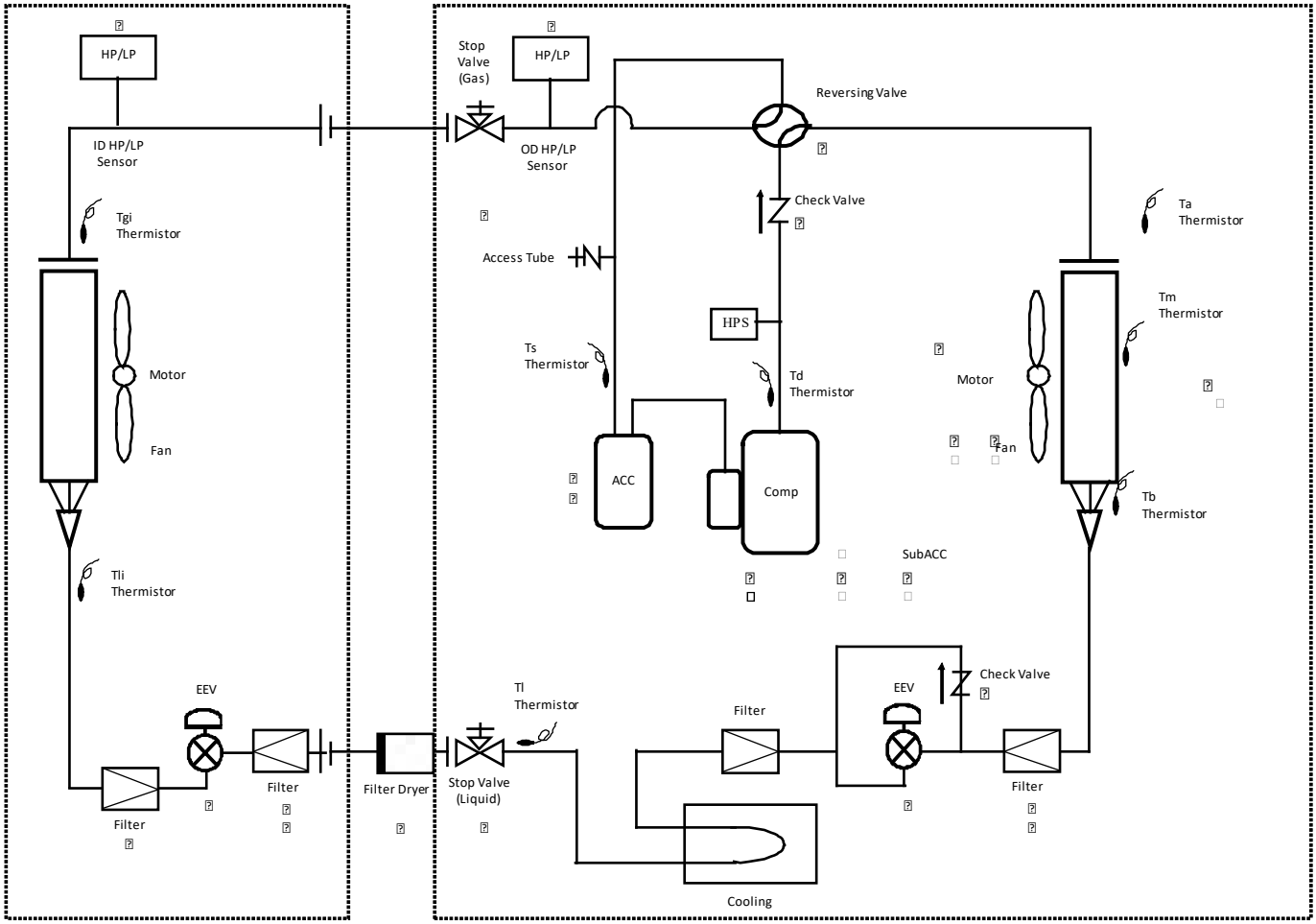

LEGEND:

Tl = Thermistor (Outdoor Liquid Temperature)

Td = Thermistor (Discharge Temperature)

Tb = Thermistor (Defrost Sensor)

Tm = Thermistor (Outdoor Coil Temperature)

Ta = Thermistor (Outdoor Air Temperature)

Tgi = Thermistor (Indoor Gas Temperature)

Tli = Thermistor (Indoor Liquid Temperature)

Ts = Thermistor (Suction Temperature)

OD HP/LP sensor = Outdoor High/Low Pressure Sensor

ID HP/LP sensor = Indoor High/Low Pressure Sensor

HPS = High Pressure Switch

SERVICING

CHECKING VOLTAGE

1. Remove outer case, control panel cover, etc., from unit being tested.

With power ON:

WARNING

LINE VOLTAGE NOW PRESENT.

2. Using a voltmeter, measure the voltage across terminals L1 and L2 of the contactor for the heat pump condenser unit or at the field connections for the air handler or heaters.
   Measure the voltage across the L1 and L2 lugs on the unitary (UC) control.
3. No reading - indicates open wiring, open fuse(s) no power or etc., from unit to fused disconnect service. Repair as needed.
4. With ample voltage at line voltage connectors, energize the unit.

Unit Supply Voltage		
Voltage	Min.	Max
208/230	197	253

NOTE: When operating electric heaters on voltages other than 240 volt, refer to the System Operation section on electric heaters to calculate temperature rise and air flow. Low voltage may cause insufficient heating.

CHECKING WIRING

WARNING

HIGH VOLTAGE
DISCONNECT ALL POWER BEFORE SERVICING OR INSTALLING THIS UNIT. MULTIPLE POWER SOURCES MAY BE PRESENT. FAILURE TO DO SO MAY CAUSE PROPERTY DAMAGE, PERSONAL INJURY OR DEATH.

1. Check wiring visually for signs of overheating, damaged insulation and loose connections.
2. Use an ohmmeter to check continuity of any suspected open wires.
3. If any wires must be replaced, replace with comparable gauge and insulation thickness.

CHECKING THERMOSTAT AND WIRING

Communicating Thermostat Wiring: The maximum wire length for 18 AWG thermostat wire is 250 feet.

THERMOSTAT AND WIRING

WARNING

LINE VOLTAGE NOW PRESENT.

With power ON, thermostat calling for cooling/heating.

1. Use a voltmeter to check for 24 volt at thermostat wires C and R in the indoor unit control panel.
2. No voltage indicates trouble in the thermostat, wiring or transformer source.
3. Check the continuity of the thermostat and wiring. Repair or replace as necessary.

WARNING

LINE VOLTAGE NOW PRESENT.

RESISTANCE HEATERS

With power ON:

1. Set room thermostat to a higher setting than room temperature so both stages call for heat.
2. With voltmeter, check for 24 volt at each heater relay.
3. No voltage indicates the trouble is in the thermostat or wiring.
4. Check the continuity of the thermostat and wiring. Repair or replace as necessary.

NOTE: Consideration must be given to how the heaters are wired (O.D.T. and etc.). Also safety devices must be checked for continuity.

CHECKING TRANSFORMER AND CONTROL CIRCUIT

WARNING

HIGH VOLTAGE
DISCONNECT ALL POWER BEFORE SERVICING OR INSTALLING THIS UNIT. MULTIPLE POWER SOURCES MAY BE PRESENT. FAILURE TO DO SO MAY CAUSE PROPERTY DAMAGE, PERSONAL INJURY OR DEATH.

A step-down transformer (208/230 volt primary to 24 volt secondary) is provided with each indoor unit. This allows ample capacity for use with resistance heaters. The outdoor sections do not contain a transformer (See note below). (See indoor unit WIRING DIAGRAM).

WARNING

DISCONNECT POWER SUPPLY BEFORE SERVICING.

SERVICING

1. Remove control panel cover, or etc., to gain access to transformer.

With power ON:

WARNING

LINE VOLTAGE NOW PRESENT.

2. Using a voltmeter, check voltage across secondary voltage side of transformer (R to C).
3. No voltage indicates faulty transformer, bad wiring, or bad splices.
4. Check transformer primary voltage at incoming line voltage connections and/or splices.
5. If line voltage available at primary voltage side of transformer and wiring and splices good, transformer is inoperative. Replace.

CHECKING HIGH PRESSURE SWITCH

WARNING

HIGH VOLTAGE
DISCONNECT ALL POWER BEFORE SERVICING OR INSTALLING THIS UNIT. MULTIPLE POWER SOURCES MAY BE PRESENT. FAILURE TO DO SO MAY CAUSE PROPERTY DAMAGE, PERSONAL INJURY OR DEATH.

The high pressure switch senses the pressure in the compressor discharge line. If abnormally high condensing pressures develop, the contacts of the control open, breaking the control circuit before the compressor motor overloads. This control is automatically reset.

1. Using an ohmmeter, check across the X32A connection on the outdoor unit PCB terminals of high pressure control, with wire removed. If not continuous, the contacts are open.
2. Attach a gauge to the dill valve port on the base valve.

With power ON:

WARNING

LINE VOLTAGE NOW PRESENT.

3. Start the system in charge mode and place a piece of cardboard in front of the outdoor coil, raising the condensing pressure.
4. Check pressure at which the high pressure control cuts-out. If it cuts-out at 605 PSIG to -17 PSIG, it is operating normally (See causes for high head pressure in Service Problem Analysis Guide). If it cuts out below this pressure range, replace the control.

CHECKING INDOOR AND OUTDOOR HI/LOW PRESSURE SENSOR

The HI/LOW pressure sensor senses the suction pressure in cooling mode, and the discharge pressure in heating mode. Follow the following sequence to check the pressure sensor.

With Power ON:

WARNING

LINE VOLTAGE NOW PRESENT.

1. Connect manifold gauge to the air conditioner unit
2. Connect a pair of extended Molex probe tips to your voltmeter test leads.
3. Find the suction pressure in the cool mode, or discharge pressure in the heat mode (terminals) Locate (X17A) connection and connect a DC voltmeter across sensor terminals 1 and 3, (black and white wires) and record the DC voltage.
4. Compare your readings to the detected pressure vs output voltage in the following table. Replace the sensor if the sensor is open, shorted, or outside of the voltage range.

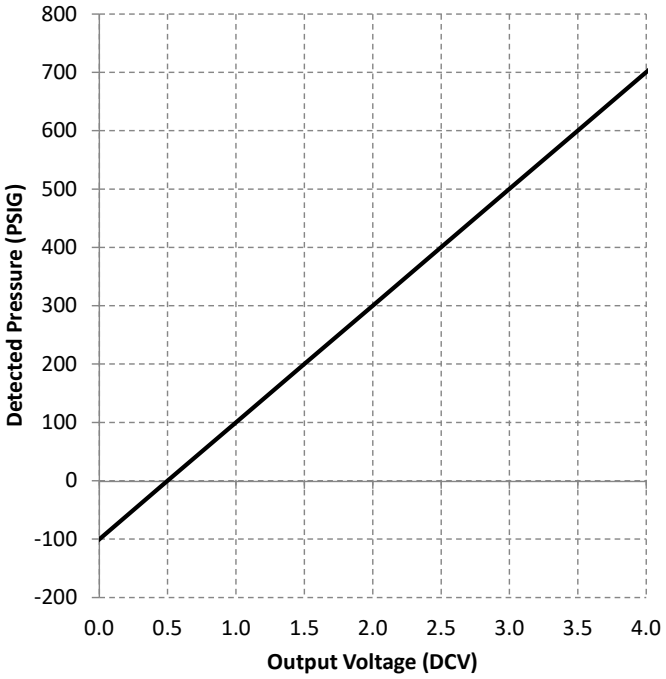

VOLTAGE AND PRESSURE CHARACTERISTICS

CHECKING COMPRESSOR

WARNING

HERMETIC COMPRESSOR ELECTRICAL TERMINAL VENTING CAN BE DANGEROUS. WHEN INSULATING MATERIAL WHICH SUPPORTS A HERMETIC COMPRESSOR OR ELECTRICAL TERMINAL SUDDENLY DISINTEGRATES DUE TO PHYSICAL ABUSE OR AS A RESULT OF AN ELECTRICAL SHORT BETWEEN THE TERMINAL AND THE COMPRESSOR HOUSING, THE TERMINAL MAY BE EXPELLED, VENTING THE VAPOR AND LIQUID CONTENTS OF THE COMPRESSOR HOUSING AND SYSTEM.

SERVICING

If the compressor terminal PROTECTIVE COVER and gasket (if required) are not properly in place and secured, there is a remote possibility if a terminal vents, that the vaporous and liquid discharge can be ignited, spouting flames several feet, causing potentially severe or fatal injury to anyone in its path.

This discharge can be ignited external to the compressor if the terminal cover is not properly in place and if the discharge impinges on a sufficient heat source.
Ignition of the discharge can also occur at the venting terminal or inside the compressor, if there is sufficient contaminant air present in the system and an electrical arc occurs as the terminal vents.

Ignition cannot occur at the venting terminal without the presence of contaminant air, and cannot occur externally from the venting terminal without the presence of an external ignition source.

Therefore, proper evacuation of a hermetic system is essential at the time of manufacture and during servicing. To reduce the possibility of external ignition, all open flame, electrical power, and other heat sources should be extinguished or turned off prior to servicing a system.

COMPRESSOR WINDING INSULATION TEST

The Inverter on the outdoor control board takes the position signal from the UVW line, connected with the compressor. If the system detects a malfunction on the compressor, check the insulation resistance in accordance with the following procedure.

WARNING

HIGH VOLTAGE
DISCONNECT ALL POWER BEFORE SERVICING OR INSTALLING THIS UNIT. MULTIPLE POWER SOURCES MAY BE PRESENT. FAILURE TO DO SO MAY CAUSE PROPERTY DAMAGE, PERSONAL INJURY OR DEATH.

1. Remove the leads from the compressor terminals.

WARNING

SEE WARNINGS BEFORE REMOVING COMPRESSOR TERMINAL COVER.

2. Using a Megometer, attach one lead to ground.
3. Using the other lead of the Megometer, check the insulation between U to ground, V to ground, W to ground.

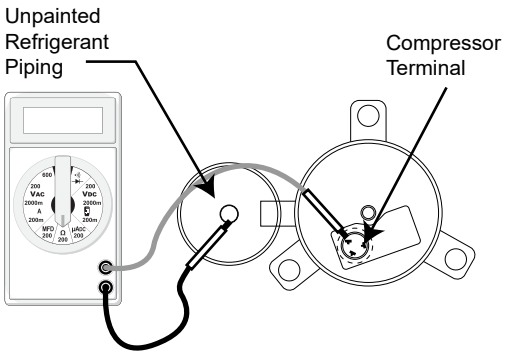

TESTING COMPRESSOR WINDINGS INSULATION

NOTE: The 2, 3, and 4 ton compressor has a terminal on the top. The 5 ton compressor has the terminals on the side. If the insulation resistance of the compressor is less than 100k Ohms between U to ground, V to ground, W to ground, replace the compressor.

GROUND TEST

If fuse, circuit breaker, ground fault protective device, etc., has tripped, this is a strong indication that an electrical problem exists and must be found and corrected. The circuit protective device rating must be checked, and its maximum rating should coincide with that marked on the equipment nameplate.

With the terminal protective cover in place, it is acceptable to replace the fuse or reset the circuit breaker ONE TIME ONLY to see if it was just a nuisance opening. If it opens again, DO NOT continue to reset.

Disconnect all power to unit, making sure that **all** power legs are open.

1. DO NOT remove protective terminal cover. Disconnect the three leads going to the compressor terminals at the nearest point to the compressor.
2. Identify the leads and using an ohmmeter on the R x 10,000 scale or the highest resistance scale on your ohmmeter check the resistance between each of the three leads separately to ground (such as an unpainted tube on the compressor).
3. If a ground is indicated, then carefully remove the compressor terminal protective cover and inspect for loose leads or insulation breaks in the lead wires.
4. If no visual problems indicated, carefully remove the leads at the compressor terminals.
5. Carefully retest for ground, directly between compressor terminals and ground.
6. If ground is indicated, replace the compressor. The resistance reading should be infinity. If there is any reading on meter, there is some continuity to ground and compressor should be considered defective.

SERVICING

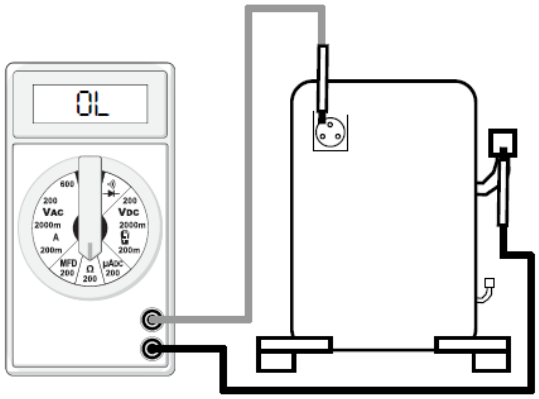

WARNING

DAMAGE CAN OCCUR TO THE GLASS EMBEDDED TERMINALS IF THE LEADS ARE NOT PROPERLY REMOVED. THIS CAN RESULT IN TERMINAL AND HOT OIL DISCHARGING.

WARNING

DISCONNECT POWER SUPPLY BEFORE SERVICING.

TESTING TEMPERATURE SENSORS AND EEV COIL RESISTANCE

The AVZC ready heat pump models and AVPEC indoor units are factory equipped with:

- (Ta) an outdoor air temperature sensor
- (Tm) an outdoor coil temperature sensor
- (Tl) an outdoor liquid temperature sensor
- (Td) a discharge temperature sensor
- (Tb) a defrost temperature sensor
- (Tgi) an indoor gas temperature sensor
- (Tli) an indoor liquid temperature sensor

To check above sensors:

WARNING

HIGH VOLTAGE
DISCONNECT ALL POWER BEFORE SERVICING OR INSTALLING THIS UNIT. MULTIPLE POWER SOURCES MAY BE PRESENT. FAILURE TO DO SO MAY CAUSE PROPERTY DAMAGE, PERSONAL INJURY OR DEATH.

1. Disconnect power to the heat pump condensor.
2. Disconnect the sensor from the electric board.
3. Connect an ohmmeter across the sensor terminals. The ohmmeter should read be the resistance shown in the table THERMISTOR RESISTANCE AND TEMPERATURE CHARACTERISTICS. Replace the sensor if the sensor is open, shorted, or outside the valid resistance range.

TESTING EEV COIL RESISTANCE

To check the resistance of the EEV coil, first disconnect EEV cable from the Control board. Make measurements of resistance between the connector pins, and then make sure the resistance falls in the range of 40 to 50Ω.

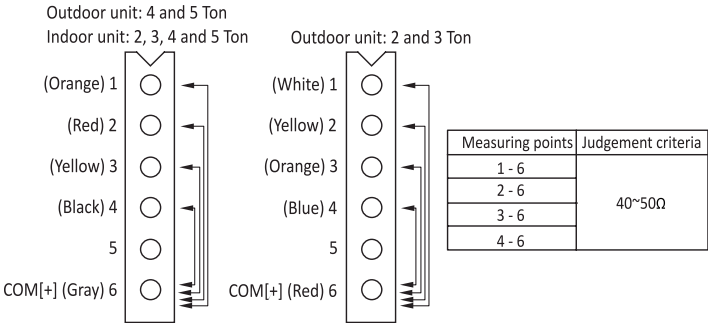

TESTING REVERSING VALVE

CHECKING REVERSING VALVE AND SOLENOID

Reversing valve used in heat pumps could potentially leak internally. Discharge gases can leak into the suction inside the valve. Compound gages will give the same symptoms as bad compressor valves or broken scroll flanks. The temperature between true suction and the suction line after the valve should not be greater than 4 degrees. **NOTE:** The center tube is always the suction line and should be cold.

TROUBLESHOOTING THE REVERSING VALVE FOR ELECTRICAL FAILURE

Place unit into the cooling mode. Test for 24 volts at the solenoid. If there is no voltage present at coil, check the control voltage. If voltage is present, loosen the nut on the top of the coil. Remove the coil, there should be slight resistance. If the slight resistance is felt, remove the coil. As you remove the coil listen carefully, an audible click should be detected. The clicking is due to the movement of the pilot valve plunger. The absence of a clicking sound indicates the plunger is stuck.

TROUBLESHOOTING MECHANICAL FAILURES ON A REVERSING VALVE BY PRESSURE

Troubleshooting the reversing valve can be done by pressure and touch. Raise the head pressure. In the cooling mode block the fan exhaust. Once head pressure has been raised, cycle between cooling and heating and see if the piston can be freed.

TROUBLESHOOTING MECHANICAL FAILURES ON A REVERSING VALVE BY TEMPERATURE

When operating properly the valve contains refrigerant gases at certain temperatures. The discharge line should be the same temperature after the valves discharge line.

SERVICING

The true suction should be the same as the suction line after the valve. If there is a 4-degree difference, valve is leaking. When stuck in the mid-position, part of the discharge gas from the compressor is directed back to the suction side, resulting in excessively high suction pressure. An increase in the suction line temperature through the reversing valve can also be measured. Check operation of the valve by starting the system and switching the operation from COOLING to HEATING cycle. If the valve fails to change its position, test the voltage (24V) at the valve coil terminals (X25A) on outdoor unit PCB while the system is on the COOLING cycle. If voltage is registered at the coil, tap the valve body lightly while switching the system from HEATING to COOLING, etc. If this fails to cause the valve to switch positions, remove the coil connector cap and test the continuity of the reversing valve solenoid coil. If the coil does not test continuous - replace it. If the coil test continuous and 24 volts is present at the coil terminals, the valve is inoperative - replace it.

AVPEC* HEATER CONTROL (OPTIONAL)

DESCRIPTION

The AVPEC* models utilize an electronic control that provides ECM blower motor control and control of up to two electric heat sequencers. The control has thermostat inputs for variable stage of cooling/heating, two stages of electric heat, reversing valve, and dehumidification. Control input is 24 VAC.

FEATURES

The new air handler control includes advanced diagnostic features with fault recall, estimated CFM display via 7 segment display of control board, CoolCloud™ ready. Diagnostics includes heater kit selection diagnostics, open fuse, internal control fault, data errors, and blower motor faults. Data errors are not included in the fault recall list. Diagnostic error codes are displayed on a single red LED. The estimated CFM is displayed on an on-board 7 segment display. For example, if the CFM is 1240 CFM, 7 segment display shows “FC...A...12...40...”.

The AVPEC* air handlers may be used in a fully communicating system when matched with a compatible outdoor unit and the thermostat. A fully communicating system offers advanced setup and diagnostic features.

BASIC OPERATION

The air handler control receives operation demand inputs from the thermostat. The control operates the variable speed blower motor at the demand as determined from the thermostat input(s). If a demand for electric heat is received, the control will provide a 24VAC output for up to two electric heat contactors.

TROUBLESHOOTING

MOTOR CONTROL CIRCUITS

WARNING

HIGH VOLTAGE
Disconnect ALL power before servicing or installing this unit. Multiple power sources may be present. Failure to do so may cause property damage, personal injury or death.

1. Turn on power to air handler or modular.

WARNING

Line voltage now present.

2. Check voltage between pins 1 and 4 at the 4-wire motor connector on the control board. Voltage should be between 9 and 15 VDC. Replace control if voltage is not as specified.

ELECTRIC HEAT SEQUENCER OUTPUTS

WARNING

HIGH VOLTAGE
Disconnect ALL power before servicing or installing this unit. Multiple power sources may be present. Failure to do so may cause property damage, personal injury or death.

1. Turn on power to air handler or modular blower.

WARNING

Line voltage now present.

2. Disconnect the 3-circuit harness connecting the control to the electric heater kit.
3. Provide a thermostat demand for low stage auxiliary heat (W1). Measure the voltage between pins 1 and 3 at the on-board electric heat connector. Voltage should measure 24VAC. Replace control if no voltage is present.

NOTE: Allow for any built-in time delays before making voltage measurements. Any electric heater faults that are present may prevent the heater output from energizing. Verify that no heater faults are present before making voltage measurements.

SERVICING

NETWORK TROUBLESHOOTING

Communications is achieved by taking the difference between a positive dc signal and a negative dc signal. The positive dc signal is termed “data 1” or “1”. Data 1 is positive with respect to ground (or common). The negative dc signal is termed “data 2” or “2”. Data 2 is negative with respect to ground (or common). Data 1 should be approximately 2.8 volts dc. Data 2 should be approximately 2.2 volts dc. The voltage difference between data 1 and data 2 should be approximately 0.6 volts dc. Verify that the bus DS1 dip switches are in the ON position.

The integrated air handler control has some on-board tools that may be used to troubleshoot the network. These tools are: red communications LED, green receive (Rx) LED, and learn button. These are described below

a. Red communications LED – Indicates the status of the network. Refer to the Network Troubleshooting Chart for the LED status and the corresponding potential problem.
b. Green receive LED – Indicates network traffic. Refer to the Network Troubleshooting Chart for the LED status and the corresponding potential problem.
c. Learn button – Used to reset the network. Depress the button for approximately 2 seconds to reset the network.

Voltages between the two data lines and between each data line and common may be used to determine if the network is operating properly.

Do the following to measure the voltages on the communications data lines.

WARNING

LINE VOLTAGE NOW PRESENT.

1. With power on to the unit, measure voltage between terminal “1” and terminal “C” on control board’s thermostat connector. Voltage should be as noted in the table below.
2. Measure voltage between terminals “2” and “C”.
3. Measure voltage between terminals “1” and “2”.
4. If voltages are different than stated in the table below, check thermostat wiring for opens/shorts.
5. The network troubleshooting chart provides additional communications troubleshooting information.

Terminals	Nonimal dc Voltages
1 to C	> 2.5 Vdc
2 to C	< 2.5 Vdc
1 to 2	> 0.2 Vdc

REFRIGERATION REPAIR PRACTICE

DANGER

ALWAYS REMOVE THE REFRIGERANT CHARGE IN A PROPER MANNER BEFORE APPLYING HEAT TO THE SYSTEM.

When repairing the refrigeration system:

WARNING

HIGH VOLTAGE
DISCONNECT ALL POWER BEFORE SERVICING OR INSTALLING THIS UNIT. MULTIPLE POWER SOURCES MAY BE PRESENT. FAILURE TO DO SO MAY CAUSE PROPERTY DAMAGE, PERSONAL INJURY OR DEATH.

1. Never open a system that is under vacuum. Air and moisture will be drawn in.
2. Plug or cap all openings.
3. Remove all burrs and clean the brazing surfaces of the tubing with sand cloth or paper. Brazing materials do not flow well on oxidized or oily surfaces.
4. Clean the inside of all new tubing to remove oils and pipe chips.
5. When brazing, sweep the tubing with dry nitrogen to prevent the formation of oxides on the inside surfaces.
6. Complete any repair by replacing the liquid line drier in the system, evacuate and charge.

BRAZING MATERIALS

IMPORTANT NOTE: Torch heat required to braze tubes of various sizes is proportional to the size of the tube. Tubes of smaller size require less heat to bring the tube to brazing temperature before adding brazing alloy. Applying too much heat to any tube can melt the tube. Service personnel must use the appropriate heat level for the size of the tube being brazed.

NOTE: The use of a heat shield when brazing is recommended to avoid burning the serial plate or the finish on the unit. Heat trap or wet rags should be used to protect heat sensitive components such as stop valves, EEV, TXV and filters.

Copper to Copper Joints - Sil-Fos used without flux (alloy of 15% silver, 80% copper, and 5% phosphorous). Recommended heat 1400°F.

Copper to Steel Joints - Silver Solder used without a flux (alloy of 30% silver, 38% copper, 32% zinc). Recommended heat - 1200°F.

SERVICING

LEAK TESTING (NITROGEN OR NITROGEN-TRACED)

WARNING

To avoid the risk of fire or explosion, never use oxygen, high pressure air or flammable gases for leak testing of a refrigeration system.

WARNING

To avoid possible explosion, the line from the nitrogen cylinder must include a pressure regulator and a pressure relief valve. The pressure relief valve must be set to open at no more than 450 PSIG.

Pressure test the system using dry nitrogen and soapy water to locate leaks. If you wish to use a leak detector, charge the system to 10 PSIG using the appropriate refrigerant then use nitrogen to finish charging the system to working pressure, then apply the detector to suspect areas. If leaks are found, repair them. After repair, repeat the pressure test. If no leaks exist, proceed to system evacuation.

STANDING PRESSURE TEST (RECOMMENDED)

Best practices dictate system should be pressure tested at 450 PSIG with nitrogen for a minimum 4 hours. Follow the procedure outlined below to test system. If leaks are found, repair them. After repair, repeat the leak pressure test described above. If no leaks exist, proceed to system evacuation and charging.

SYSTEM PRESSURE TESTING

Once all of the refrigerant line connections are completed. Perform a 3-step nitrogen pressure test.

1. Pressurize the system with nitrogen to 150 PSIG and hold for 3 minutes. If any pressure drops occur, locate and repair leaks and repeat step 1.
2. Pressurize the system with nitrogen to 325 PSIG and hold for 5 minutes. If any pressure drops occur, locate and repair leaks and repeat step 1.
3. Pressurize the system with nitrogen to 450 PSIG and hold for 4 hours. If any pressure drops occur, locate and repair leaks and repeat step 1.

EVACUATION

WARNING

REFRIGERANT UNDER PRESSURE!
Failure to follow proper procedures may cause property damage, personal injury or death.

IMPORTANT NOTE: Because of the potential damage to compressors, do not allow suction pressure at service valve to drop below 5 PSIG when pumping unit system down for repair. Outdoor section, depending on line set length and amount of charge in system, may not be able to hold the entire system charge.

This is the most important part of the entire service procedure. The life and efficiency of the equipment is dependent upon the thoroughness exercised by the serviceman when evacuating air (non-condensables) and moisture from the system.

Air in a system causes high condensing temperature and pressure, resulting in increased power input and reduced performance.

Moisture chemically reacts with the refrigerant oil to form corrosive acids. These acids attack motor windings and parts, causing breakdown.

The equipment required to thoroughly evacuate the system is a vacuum pump, capable of producing a vacuum equivalent to 500 microns absolute and a micron gauge to give a true reading of the vacuum in the system.

NOTE: Never use the system compressor as a vacuum pump or run when under a high vacuum. Motor damage could occur.

The triple evacuation method is recommended.

1. Evacuate the system to 4000 microns and hold for 15 minutes. Then, break the vacuum with dry nitrogen, bring the system pressure up to 2-3 PSIG, and hold for 20 minutes. Release the nitrogen.
2. Evacuate to 1500 microns and hold for 20 minutes. Break the vacuum with dry nitrogen again, bring the system pressure back up to 2-3 PSIG, and hold for 20 minutes.
3. Then, evacuate the system until it is below 500 microns and hold for 60 minutes.

WARNING

Do not front seat the service valve(s) with the compressor open, with the suction line of the compressor closed or severely restricted.

1. Connect the vacuum pump, vacuum tight manifold set with high vacuum hoses, micron gauge and charging cylinder as shown.

2. Start the vacuum pump and open the shut off valve to the high vacuum gauge manifold only. After the compound gauge (low side) has dropped to approximately 29 inches of vacuum, open the valve to the vacuum micron gauge. See that the vacuum pump will blank-off to a maximum of 500 microns. A vacuum pump can only produce a good vacuum if its oil is non-contaminated.

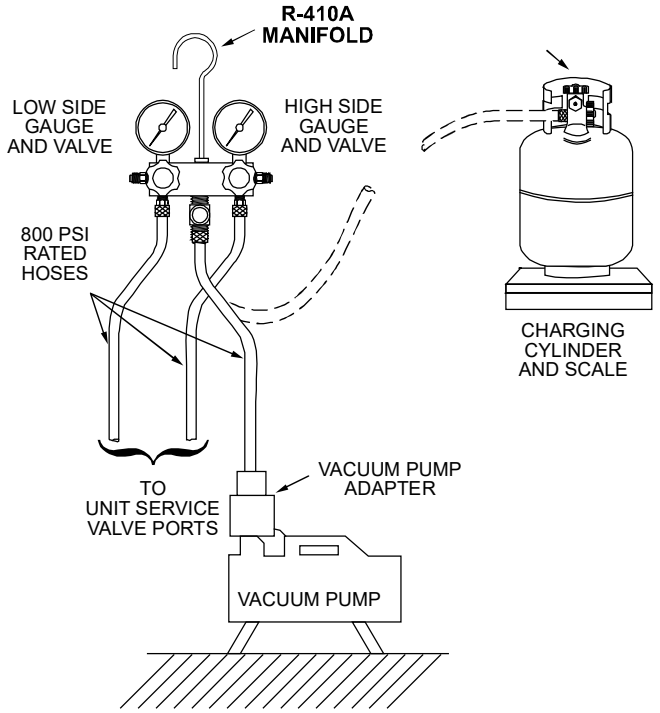

EVACUATION

3. If the vacuum pump is working properly, close the valve to the micron gauge and open the high and low side valves to the high vacuum manifold set. With the valve on the charging cylinder closed, open the manifold valve to the cylinder.
4. Evacuate the system to at least 29 inches gauge before opening valve to micron gauge.
5. Continue to evacuate to a maximum of 500 microns. Close valve to vacuum pump and watch rate of rise. If vacuum does not rise above 500 microns in three to five minutes, system can be considered properly evacuated.
6. If micron gauge continues to rise and levels off at about 2000 microns, moisture and non-condensables are still present. If gauge continues to rise a leak is present. Repair and re-evacuate.
7. Close valve to micron gauge and vacuum pump. Shut off pump and prepare to charge.

CHARGING

WARNING

REFRIGERANT UNDER PRESSURE!
- **Do not overcharge system with refrigerant.**
- **Do not operate unit in a vacuum or at negative pressure.**

Failure to follow proper procedures may cause property damage, personal injury or death.

CAUTION

Use refrigerant certified to AHRI standards. Used refrigerant may cause compressor damage and is not covered by the warranty. Most portable machines cannot clean used refrigerant to meet AHRI Standards.

CAUTION

Damage to the unit caused by operating the compressor with the suction valve closed is not covered under the warranty and may cause serious compressor damage.

Charge the system with the exact amount of refrigerant. See the Installation Manual for the correct refrigerant charge.

An inaccurately charged system will cause future problems.
1. When using an ambient compensated calibrated charging cylinder, allow liquid refrigerant only to enter the high side.
2. Once the system stops taking refrigerant, close the valve on the high side of the charging manifold.
3. Start the system and charge the balance of the refrigerant through the low side.

NOTE: R410A should be drawn out of the storage container or drum in liquid form due to its fractionation properties, but should be “Flashed” to its gas state before entering the system. There are commercially available restriction devices that fit into the system charging hose set to accomplish this. **DO NOT** charge liquid R410A into the compressor.

4. With the system still running, close the valve on the charging cylinder. At this time, you may still have some liquid refrigerant in the charging cylinder hose and will definitely have liquid in the liquid hose. Reseat the liquid line core. Slowly open the high side manifold valve and transfer the liquid refrigerant from the liquid line hose and charging cylinder hose into the suction service valve port. CAREFUL: Watch so that liquid refrigerant does not enter the compressor.

SERVICING

FINAL CHARGE ADJUSTMENT

The outdoor temperature must be 65°F to 105°F. If outdoor ambient temperature is out of range, charge defined amount and don't adjust subcooling. Set unit to CHARGE mode.

After system has stabilized per startup instructions, check subcooling as detailed in the following section.

In the event of system overcharge or undercharge, refrigerant in the system must be adjusted to the appropriate subcooling and superheat as specified in the following sections. Refrigerant amount should be adjusted within +/- 0.5 lb. if the outdoor ambient temperature is greater than 65°F and less than 105°F. Manufacturer recommends that the system should be evacuated and should be charged the initial refrigerant for given line length when the ambient temperature is less than 65°F and more than 105°F. Refer to the Installation Manual to calculate refrigerant amount.

5. With the system still running, remove hose and reinstall both valve caps.
6. Check system for leaks.

NOTE: Subcooling information is valid only while the unit is operating at 100% capacity or 100% of compressor speed in CHARGE MODE. Compressor speed is displayed under STATUS menu in the thermostat.

CHECKING COMPRESSOR EFFICIENCY

The reason for compressor inefficiency is that the compressor is broken or damaged, reducing the ability of the compressor to pump refrigerant vapor. The condition of the compressor is checked in the following manner.

1. Attach gauges to the high and low side of the system.
2. Start the system and run CHARGE MODE.

If the test shows:

a. Below normal high side pressure.
b. Above normal low side pressure.
c. Low temperature difference across coil.
d. Low amp draw at compressor.

And the charge is correct. The compressor is faulty - replace the compressor.

CHECKING SUBCOOLING

Refrigerant liquid is considered subcooled when its temperature is lower than the saturation temperature corresponding to its pressure. The degree of subcooling equals the degrees of temperature decrease below the saturation temperature at the existing pressure.

1. Attach an accurate thermometer or preferably a thermocouple type temperature tester to the liquid service valve as it leaves the condensing unit.
2. Install a high side pressure gauge on the high side (liquid) service valve at the front of the unit.
3. Record the gauge pressure and the temperature of the line.
4. Review the technical information manual or specification sheet for the model being serviced to obtain the design subcooling.
5. Compare the hi-pressure reading to the "Required Liquid Line Temperature" chart. Find the hi-pressure value on the left column. Follow that line right to the column under the design subcooling value. Where the two intersect is the required liquid line temperature. Alternately you can convert the liquid line pressure gauge reading to temperature by finding the gauge reading in the R-410A Pressure vs. Temperature Chart, find the temperature in the °F. Column.
6. The difference between the thermometer reading and pressure to temperature conversion is the amount of subcooling.

Add charge to raise subcooling. Recover charge to lower subcooling.

Subcooling Formula = Sat. Liquid Temp. - Liquid Line Temp.

EXAMPLE:

a. Liquid Line Pressure = 417 PSIG
b. Corresponding Temp. = 120°F.
c. Thermometer on Liquid line = 109°F.

To obtain the amount of subcooling subtract 109°F from 120°F.

The difference is 11° subcooling. See the specification sheet or technical information manual for the design subcooling range for your unit.

2 TON	10-12°F
3 TON	13-15°F
4 TON	8-10°F
5 TON	11-13°F

There are other causes for high head pressure which may be found in the "Cooling / Heating Analysis Chart."
If other causes check out normal, an overcharge or a system containing non-condensables would be indicated.

If this system is observed:

1. Start the system.
2. Remove and capture small quantities of gas from the suction line dill valve until the head pressure is reduced to normal.
3. Observe the system while running a cooling performance test. If a shortage of refrigerant is indicated, then the system contains non-condensables.

SERVICING

SUBCOOLING ADJUSTMENT ON EEV APPLICATIONS

NOTE: Subcooling information is valid only while the unit is operating at 100% capacity or 100% compressor speed in CHARGE MODE.

Compressor speed is displayed under STATUS menu in the thermostat.

1. Run system at least 20 minutes to allow pressure to stabilize. During the adjustment of subcooling, ambient temperature should be greater than 65°F and less than 105°F. If ambient temperature is out of range, don't adjust subcooling.
2. For best results, temporarily install a thermometer on the liquid line at the liquid line service valve. Ensure the thermometer makes adequate contact and is insulated for best possible readings. Use liquid line temperature to determine sub-cooling.
3. The system subcooling should fall in the range shown in following table. If not in that range, adjust subcooling according to the following procedure.
   a. If subcooling is low, add charge to adjust the subcooling as specified in the following table.

2 TON	10-12°F
3 TON	13-15°F
4 TON	8-10°F
5 TON	11-13°F

   b. If subcooling is high, remove charge to lower the subcooling to specified range.

NOTE: Not more than 0.8 lb. (13 oz.) of refrigerant be added to the system at a time to achieve the target subcooling. It is recommended adding 4 oz. refrigerant each time, then wait 20 minutes to stabilize the system.

4. Disconnect manifold set. Installation is complete.

NON-CONDENSABLES

If non-condensables are suspected, shut down the system and allow the pressures to equalize. Wait at least 15 minutes. Compare the pressure to the temperature of the coldest coil since this is where most of the refrigerant will be. If the pressure indicates a higher temperature than that of the coil temperature, non-condensables are present.

Non-condensables are removed from the system by first removing the refrigerant charge, replacing and/or installing liquid line drier, evacuating and recharging.

COMPRESSOR BURNOUT

When a compressor burns out, high temperature develops causing the refrigerant, oil and motor insulation to decompose forming acids and sludge.

If a compressor is suspected of being burned-out, attach a refrigerant hose to the liquid line dill valve and properly remove and dispose of the refrigerant.

NOTICE

VIOLATION OF EPA REGULATIONS MAY RESULT IN FINES OR OTHER PENALTIES.

Now determine if a burn out has actually occurred. Confirm by analyzing an oil sample using a Sporlan Acid Test Kit, AK-3 or its equivalent.

Remove the compressor and obtain an oil sample from the suction stub. If the oil is not acidic, either a burnout has not occurred or the burnout is so mild that a complete clean-up is not necessary.

If acid level is unacceptable, the system must be cleaned by using the clean-up drier method.

CAUTION

DO NOT ALLOW THE SLUDGE OR OIL TO CONTACT THE SKIN. SEVERE BURNS MAY RESULT.

NOTE: The Flushing Method using R-11 refrigerant is no longer approved by the Manufacturer.

REFRIGERANT PIPING

The piping of a refrigeration system is very important in relation to system capacity, proper oil return to compressor, pumping rate of compressor and cooling performance of the evaporator. A bi-flow filter drier must be brazed on by the installer onsite. Ensure the bi-flow filter drier pain finish is intact after brazing. If the paint of the steel filter drier has been burned or chipped, repaint or treat with a rust preventative. The recommended location of the filter drier is before the electronic expansion valve at the indoor unit. The liquid line must be insulated if more than 50 ft. of liquid line will pass through an area that may reach temperatures of 30°F of higher than ambient in cooling mode and/or if the temperature inside the conditioned space may reach a temperature lower than ambient in heating mode.

FVC50K oils maintain a consistent viscosity over a large temperature range which aids in the oil return to the compressor; however, there will be some installations which require oil return traps. These installations should be avoided whenever possible, as adding oil traps to the refrigerant lines also increases the opportunity for debris and moisture to be introduced into the system.

Avoid long running traps in horizontal suction line.

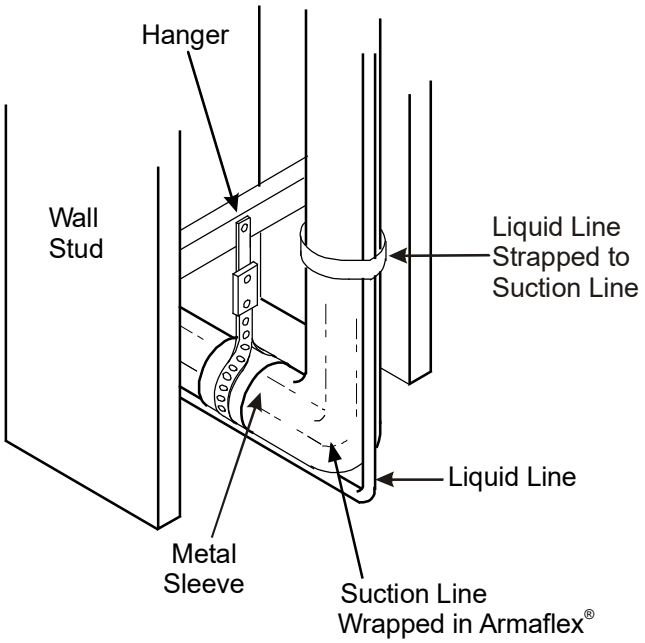

FIGURE 1-1.
INSTALLATION OF REFRIGERATION PIPING FROM VERTICAL TO HORIZONTAL

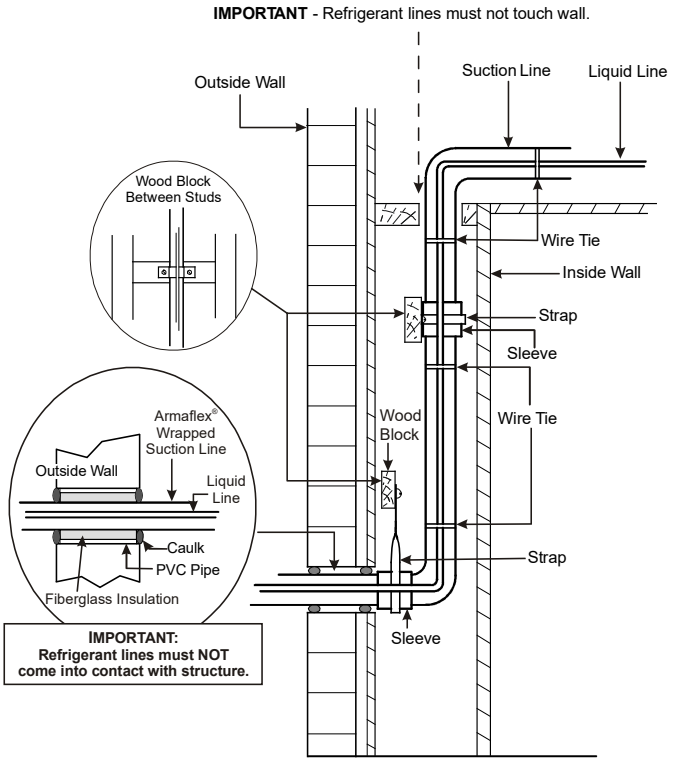

FIGURE 1-2. INSTALLATION OF REFRIGERANT PIPING (VERTICAL)
NEW CONSTRUCTION SHOWN

NOTE: If line set is installed on the exterior of an outside wall, similar installation practices are to be used.

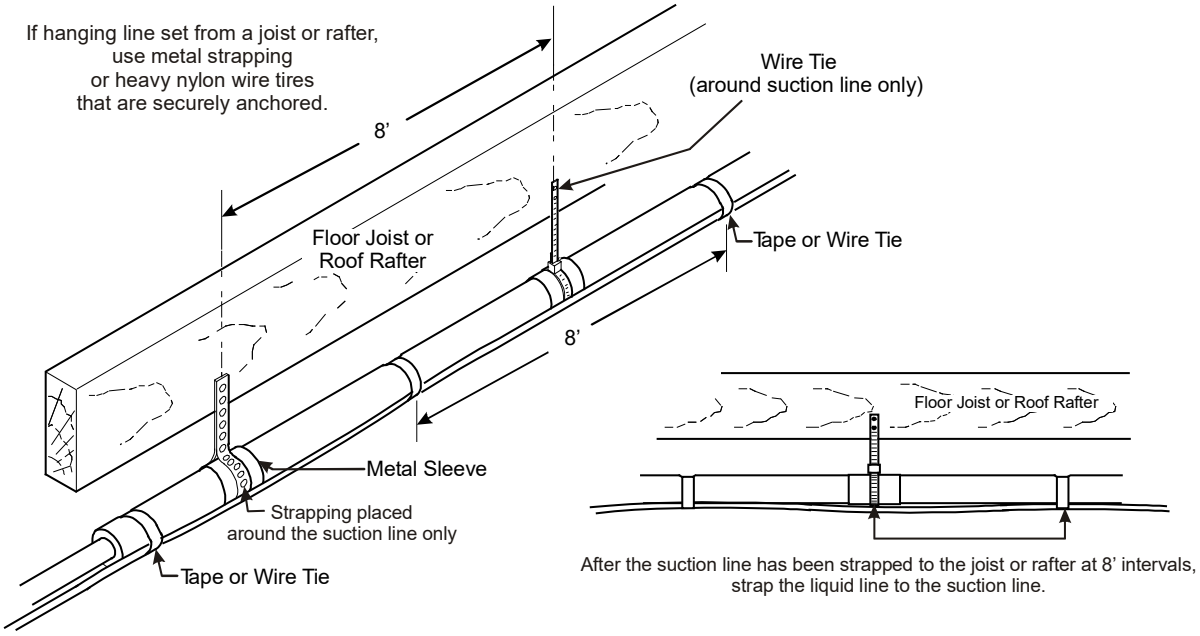

SECTION 3. OUTDOOR UNIT IS ABOVE THE INDOOR UNIT

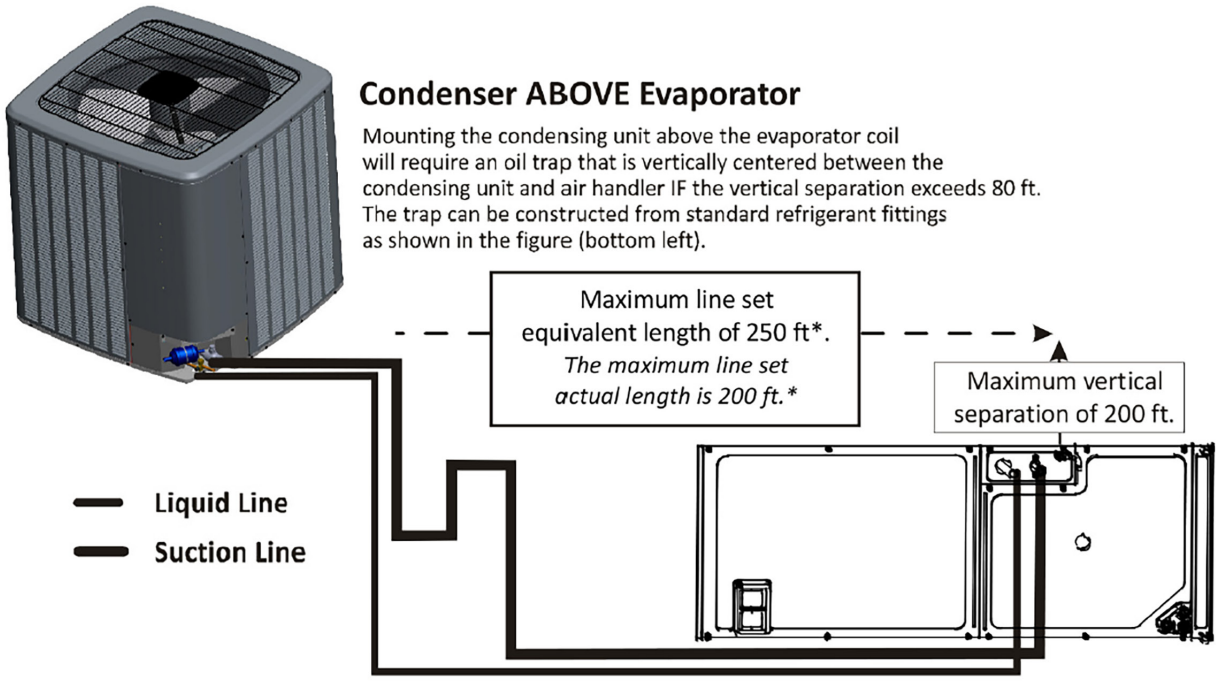

*Accounts for pressure losses of any elbows, bends, etc.

1. Gas line must be sloped continuously towards the indoor unit.
2. The maximum elevation (vertical) difference between the outdoor unit and indoor unit is 200 feet.
3. The maximum line set equivalent length is 250 feet, which includes pressure losses of any elbow, bends, etc. The maximum line set actual length is 200 feet.
4. Inverted suction loop is not required at either unit.
5. An accumulator is not required for outdoor unit (accumulators are factory installed).

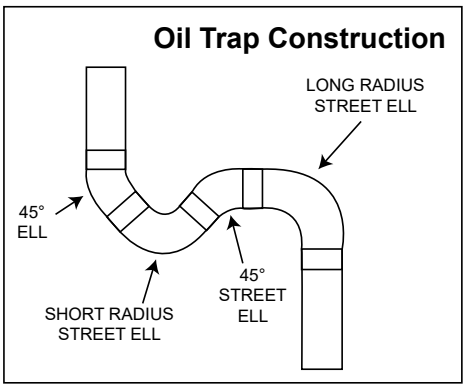

SECTION 4. OUTDOOR UNIT IS BELOW THE INDOOR UNIT

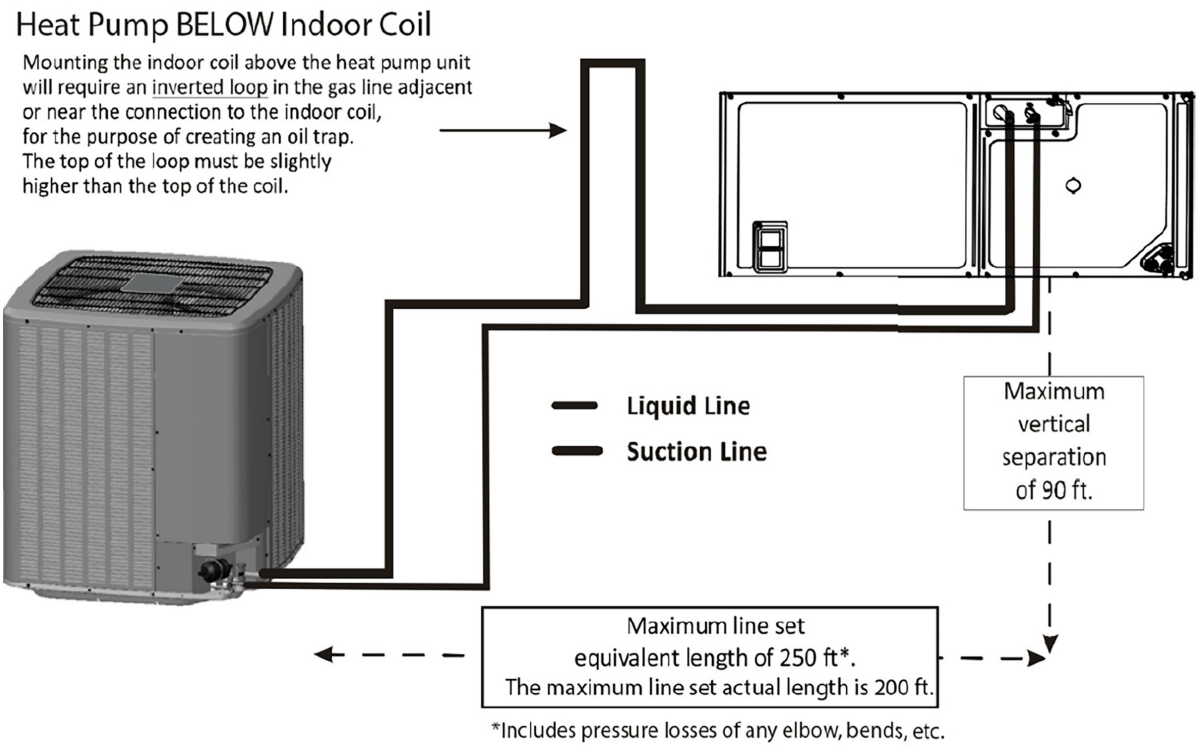

1. The maximum elevation (vertical) difference between the outdoor unit and the indoor unit is 90 feet.
2. Suction line must be installed in a manner to prevent liquid migration to the outdoor unit from the indoor unit.

The heat pump condenser unit is shipped with a predetermined factory charge level as shown in the following chart. For longer line sets greater than 15 feet, add 0.6 ounces of refrigerant per foot.

NOTICE

Total Refrigerant =
Factory Charge + (0.6 oz./ft. * Additional Feet of Actual Line Set).

SERVICING

DUCT STATIC PRESSURES AND/OR STATIC PRESSURE DROP ACROSS COILS

This minimum and maximum allowable duct static pressure for the indoor sections are found in the specifications section.

Tables are also provided for each coil, listing quantity of air (CFM) versus static pressure drop across the coil.

Too great an external static pressure will result in insufficient air that can cause icing of the coil. Too much air can cause poor humidity control and condensate to be pulled off the indoor coil causing condensate leakage. Too much air can also cause motor overloading and in many cases this constitutes a poorly designed system.

AIR HANDLER EXTERNAL STATIC

To determine proper air movement, proceed as follows:

1. Using a draft gauge (inclined manometer), measure the static pressure of the return duct at the inlet of the unit, (Negative Pressure).
2. Measure the static pressure of the supply duct, (Positive Pressure).
3. Add the two (2) readings together.
4. Consult unit nameplate for quantity of air.

Checking Static Pressure Single Piece Air Handler

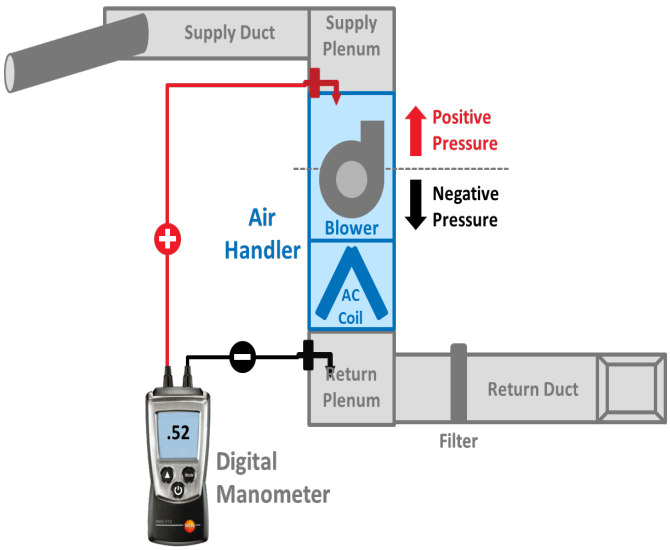

- Measure static pressure of the supply duct at the outlet of the air handler.
- Measure the static pressure of the return duct at the inlet of the air handler
- Single piece air handler evaporator coil is already considered in airflow calculation
- **NOTE:** Both readings may be taken simultaneously and read if so desired.

COIL STATIC PRESSURE DROP

1. Using a draft gauge (inclined manometer), connect the positive probe underneath the coil and the negative probe above the coil.
2. A direct reading can be taken of the static pressure drop across the coil.
3. Consult unit nameplate for quantity of air.

If the total external static pressure and/or static pressure drop exceeds the maximum or minimum allowable statics, check for closed dampers, dirty filters, undersized or poorly laid out duct work.

SERVICING

INDOOR UNIT TROUBLESHOOTING

WARNING

HIGH VOLTAGE

DISCONNECT ALL POWER BEFORE SERVICING OR INSTALLING THIS UNIT. MULTIPLE POWER SOURCES MAY BE PRESENT. FAILURE TO DO SO MAY CAUSE PROPERTY DAMAGE, PERSONAL INJURY OR DEATH.

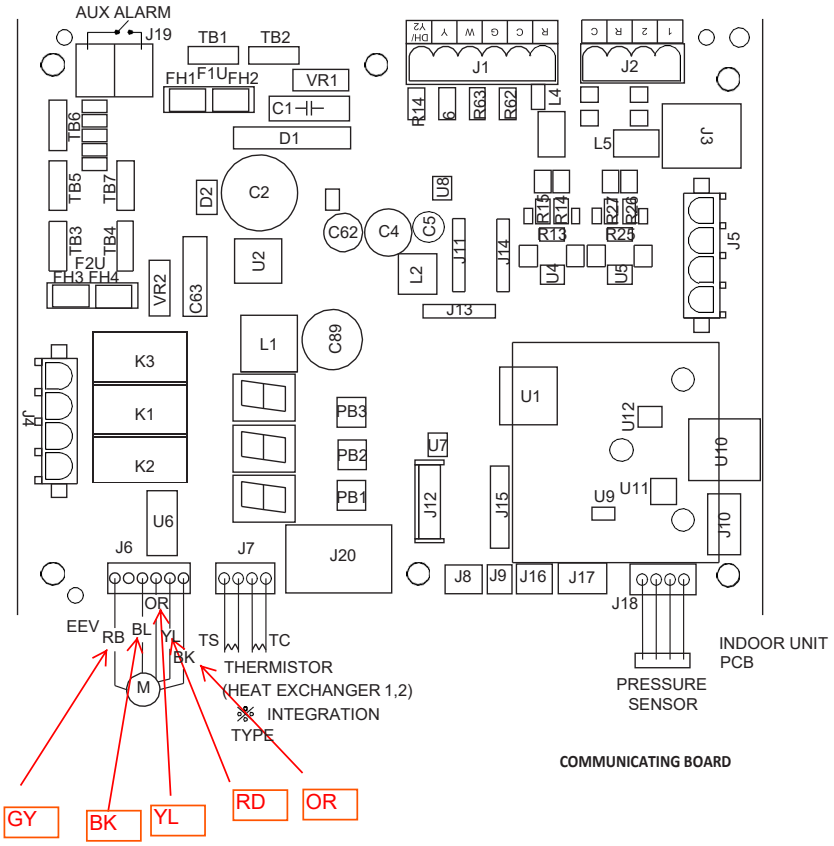

AUXILIARY ALARM SWITCH

The control is equipped with a 24VAC Aux Alarm to be used for a condensate switch install (designated by CONDENSATE IN/OUT on the control). By default, the connected AUX switch is normally closed and opens when the water level in the evaporator coil base pan reaches an undesirable level. The control responds by displaying a “EDF” error code and turning off the outdoor condensing unit. If the AUX switch is detected to be in the closed position for 30 seconds, normal operation resumes and the error message is no longer displayed.

CIRCULATOR BLOWER

This air handler is equipped with a variable speed circulator blower. This blower provides several automatically-adjusted blower speeds. The Specification Sheet applicable to your model provides an airflow table, showing the relationship between airflow (CFM) and external static pressure (E.S.P.).

SERVICING

TROUBLESHOOTING

ELECTROSTATIC DISCHARGE (ESD) PRECAUTIONS

NOTE: Discharge body's static electricity before touching unit. An electrostatic can adversely affect electrical components.

Use the following precautions during air handler installation and servicing to protect the integrated control module from damage. By putting the air handler, the control, and the person at the same electrostatic potential, these steps will help avoid exposing the integrated control module to electrostatic discharge. This procedure is applicable to both installed and uninstalled (ungrounded) blowers.

1. Disconnect all power to the blower. Do not touch the integrated control module or any wire connected to the control prior to discharging your body's electrostatic charge to ground.
2. Firmly touch a clean, unpainted, metal surface of the air handler blower near the control. Any tools held in a person's hand during grounding will be discharged.
3. Service integrated control module or connecting wiring following the discharge process in step 2. Use caution not to recharge your body with static electricity; (i.e., do not move or shuffle your feet, do not touch ungrounded objects, etc.). If you come in contact with an ungrounded object, repeat step 2 before touching control or wires.
4. Discharge your body to ground before removing a new control from its container. Follow steps 1 through 3 if installing the control on a blower. Return any old or new controls to their containers before touching any ungrounded object.

DIAGNOSTIC CHART

WARNING

HIGH VOLTAGE
TO AVOID PERSONAL INJURY OR DEATH DUE TO ELECTRICAL SHOCK, DISCONNECT ELECTRICAL POWER BEFORE PERFORMING ANY SERVICE OR MAINTENANCE.

Refer to the Troubleshooting Chart at the end of this manual for assistance in determining the source of unit operational problems. The 7 segment LED display will provide any active fault codes. An arrow printed next to the display indicates proper orientation (arrow points to top of display). See following image.

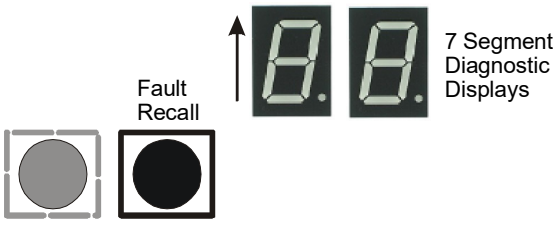

FAULT CODE HISTORY

The heat pump's diagnostics menu provides access to the most recent faults. The six most recent faults can be accessed through the control board seven segment displays or the CoolCloud mobile app. Any consecutively repeated fault is stored a maximum of three times.

Example: A leak in the system, low refrigerant charge or an incompletely open stop valve can cause the unit to flash error code E15. This error code suggests that the unit is experiencing operation at low pressure. The control will only store this fault the first three consecutive times the fault occurs.

NOTE: THE FAULT LIST CAN BE CLEARED AFTER PERFORMING MAINTENANCE OR SERVICING THE SYSTEM TO ASSIST IN THE TROUBLESHOOTING PROCESS.

DEVICE STATUS

This menu displays information about the systems current status. This menu can be utilized to confirm correct functionality of the equipment and for troubleshooting purposes.

The following items will be displayed:

- Heat Capacity Request Percentage
- Cool Capacity Request Percentage
- Heat Capacity Request During Defrost Percentage
- Dehumidification Request Percentage
- Reversing Valve Status
- Reported Airflow by Indoor Unit
- Boost Mode
- Previous Defrost Run Time

SENSOR DATA

The following sensor values will be displayed:

- Outdoor Temperature
- Coil Temperature
- Liquid Line Temperature
- Discharge Temperature
- Defrost Sensor
- Suction Pressure

PUMP DOWN / CHARGE MODE

This function can be enabled in this menu.

SYSTEM VERIFICATION TEST

The mandatory system verification test is enabled from this menu, which enables a functional check of the equipment, in addition to ensuring proper stop valve position.

DIAGNOSTIC CODES

7 SEGMENT LED DISPLAY	DESCRIPTION OF CONDITION	ERROR MESSAGE
On	Normal Operation	--
Eb	NO HTR KIT INSTALLED - SYSTEM CALLING FOR AUXILIARY HEAT (Minor Error Code)	(No Display)
Ed	HEATER KIT DIP SWITCHES NOT SET PROPERLY	Check Heater Kit Dip Switches
E5	FUSE OPEN	BLOWN FUSE
EF	AUXILIARY SWITCH OPEN	Auxiliary Contacts Open
d0	DATA NOT ON NETWORK	Data Not Yet On Network
d1	INVALID DATA ON NETWORK	Invalid Data On Netwrok
d4	INVALID BLUETOOTH® SHARED DATA LOADER BTSDL01 DATA	Invalid BTSDL01 data
b0	BLOWER MOTOR NOT RUNNING	Blower Motor Not Running
b1	BLOWER MOTOR COMMUNICATION ERROR	Blower Communication Error
b2	BLOWER MOTOR HP (Horse power) MISMATCH	Blower Motor HP Mismatch
b3	BLOWER MOTOR OPERATING IN POWER, TEMP., OR SPEED LIMIT	(No Display)
b4	BLOWER MOTOR CURRENT TRIP OR LOST ROTOR	Blower Trip or Lost Rotor
b6	OVER/UNDER VOLTAGE TRIP OR OVER TEMPERATURE TRIP	Voltage or Temperature Trip
b7	INCOMPLETE PARAMETER SENT TO MOTOR	Incomplete Parameters Sent to Motor
b9	LOW INDOOR AIRFLOW (Minor Error Code) (without EH mode)	(No Display)
9b	LOW INDOOR AIRFLOW (Major Error Code) (EH mode only)	LOW ID AIR EH MODE
70	EEV DISCONNECTION DETECTED	EEV OPEN CKT
73	LIQUID SIDE THERMISTOR ABNORMALITY	LIQ TEMP FLT
74	GAS SIDE THERMISTOR ABNORMALITY	GAS TEMP FLT
75	PRESSURE SENSOR ABNORMALITY	PRESSURE FLT
77	INDOOR UNIT - THERMOSTAT COMMUNICATION ERROR (STARTUP OPERATION & DURING OPERATION)	TSTAT ID NO COM
Hu	HUMIDIFICATION DEMAND (Running without heating)	--
FC	FAN COOL - COMMUNICATING MODE ONLY (Fan Demand-Cool)	--
FH	FAN HEAT - COMMUNICATING MODE ONLY (Fan Demand-Heat)	--
F	FAN ONLY (Fan Demand-Manual)	--
H1	ELECTRIC HEAT LOW (Heat Demand, Back-up Heat Demand)	--
H2	ELECTRIC HEAT HIGH (Heat Demand, Back-up Heat Demand)	--
dF	DEFROST - COMMUNICATING MODE ONLY (note: defrost is displayed as H1 in a legacy setup)	--

SERVICING

Air Handler Troubleshooting Matrix

Symptoms of Abnormal Operation	Diagnostic / Status LED Codes	Fault Description	Possible Causes	Corrective Actions
No outdoor unit operations	EC1	Communication error with outdoor unit	Improper low voltage wiring between the indoor and outdoor unit Outdoor control board lost power during operation	Locate and correct improper low voltage wiring Issue Identify reason outdoor control board lost power during operation
No Air Handler operation	E05	Open fuse	Short in low voltage wiring	Locate and correct short in low voltage wiring Replace fuse with 3-amp automotive type
No Air Handler operation	E0F	Auxiliary switch (condensate switch) open	High water level in the evaporation coil	Check evaporator drain pan, trap, piping
No Air Handler operation	Ed0	Data not yet on network	No network data	Populate shared data set using memory card
No Air Handler operation	Ed1	Invalid memory card data	Air Handler blower does not contain an appropriate shared data set	Populate correct shared data using memory card
Operation different than expected or no operation	Ed4	Invalid memory card data	Shared data set on memory card has been rejected by integrated control module	Verify shared data set is correct for the specific model. Re-populate data using correct memory card if required
No Air Handler operation	Eb0	Circulator blower motor not running with demand present	Loose or disconnected wiring connection at circulator motor power leads Open circuit in inductor or loose wiring connection at inductor (3/4 Hp and 1 Hp models only) Failed circulator blower motor	Tighten or correct wiring connection Verify continuous circuit through inductor Replace if open or short circuit Check circulator blower motor
No Air Handler operation	Eb1	Integrated control module has lost communications with circulator blower motor	Loose wiring connection at circulator motor control leads Failed circulator blower motor Failed integrated control module	Tighten or correct wiring connection Check circulator blower motor, replace if necessary Check integrated control module, replace if necessary
No Air Handler operation	Eb2	Circulator blower motor horse power in shared data set does not match circulator blower motor horse power	Incorrect circulator blower motor in Air Handler Incorrect shared data set in integrated control module	Verify circulator blower if motor horse power is the same specified for the specific Air Handler model, replace if necessary Verify shared data set is correct for the specific model, re-populate data using correct memory card if required
Air Handler operates at reduced performance Airflow delivered is less than expected	Eb3	Circulator blower motor is operating in a power, temperature, or speed limiting condition	Blocked filters Restrictive or undersized ductwork High ambient temperatures	Check filters for blockage, clean filters or remove obstruction Check ductwork for blockage, remove obstruction and verify all registers are fully open Verify ductwork is appropriately sized for system and resize/replace ass needed

SERVICING

Air Handler Troubleshooting Matrix (Continued)

Symptoms of Abnormal Operation	Diagnostic / Status LED Codes	Fault Description	Possible Causes	Corrective Actions
Blower Motor Operating in Power	E63	Motor operational parameters exceeded	Power fluctuation	Replace motor
Blower Motor Current Trip or Lost Rotor	E64	Motor will not rotate	Excessive motor current draw	Replace motor
Blower Motor Locked Rotor	E65	Motor will not rotate	Motor not running	Replace motor
Over/Under Voltage Trip	E66	Motor Line Voltage	Line voltage to motor out of range	Verify motor line voltage Replace motor
Incomplete Parameter sent to Motor	E67	Noise on motor communication line	Corrupted data in motor communications	Power cycle system Replace motor
Inadequate Airflow	E69	Less than expected airflow	Blower motor running too slow	Replace motor
ClimateTalk Network Communications	EC1	No ClimateTalk communications	Broken or disconnected ClimateTalk wiring	Check ClimateTalk communications wiring
Coil Temperature Sensor Open	EC6	No coil temperature	Sensor not connected or broken wire	Check if coil sensor is connected Replace coil sensor
Coil Temperature Sensor Shorted	EC7	No coil temperature	Faulty sensor	Replace coil sensor
Suction Temperature Sensor Open	EC8	No suction temperature	Sensor not connected or broken wire	Check if suction sensor is connected Replace suction sensor
Suction Temperature Sensor Shorted	EC9	No suction temperature	Faulty sensor	Replace Suction sensor
EEV not connected	E70	No EEV communications	EEV not connected, broken wire	Check EEV connection at air handler
Liquid Thermistor Open or Shorted	E73	No coil temperature	Sensor not connected or broken wire	Check coil (liquid) sensor is connected, if no connect, if yes replace
Gas Temperature sensor Open or Shorted	E74	No suction temperature	Sensor not connected or broken wire	Check suction (gas) sensor is connected, if no connect, if yes replace
Pressure Sensor Open or Shorted	E75	No indoor pressure reading	Sensor not connected or broken wire	Check if sensor is connected If connected, replace sensor, may also need to replace air handler board

SERVICING

Air Handler Display

LED Display	Menu Description
LGF	View 6 most recent fault codes and Clear Fault Codes if desired (furnace)
Lrn	Restart communications between the indoor and outdoor unit.
Cr	Control Firmware Revision Number
Sr	Control Shared Data Revision Number
FSd	Constant Fan Speed as percent of maximum airflow. Default = 30%
EHt	Electric Heater Kit Wattage (kW)
EFd	Electric Heat Off Delay (seconds)
End	Electric Heat On Delay (seconds)
EtF	Electric Heat Airflow Trim (percentage)
ESt	Percentage of high stage electric heating airflow to run during low stage electric heat operation
CFS	1 = System will try to satisfy the thermostat quickly. 5 (default) = System will try to satisfy the thermostat more slowly.
dHL	Select "Hi " to enable dehumidification when the thermostat DH terminal is energized. Select "Lo" to enable dehumidification when the thermostat DH terminal is de-energized. (default = Hi)
OdS	Select number of stages for the non-communicating outdoor unit. (1 AC for single-stage Air Conditioners, 1 HP for single-stage Heat Pumps, 2AC for two-stage Air Conditioners or 2HP for two-stage Heat Pumps)
ton	Indoor Airflow for non-communicating outdoor units. (Values based on 400CFM per ton) (default = 3.0 Ton)
CtF	Cooling Airflow Trim (default 0%)
CAP	Cooling Airflow Profile setting (default = profile D shown as 4)
Cnd	Cooling Airflow On Delay Time (default = 5 seconds)
CFd	Cooling Airflow Off Delay Time. (default = 60 seconds)
CSt	Percentage of high stage cooling airflow to run during low stage operation. (default = 70%)
dHS	Electric heat operation during defrost. 1 = low stage 2 (default) = high stage
HtF	Heat Pump Indoor Airflow Trim (default = 0%)
HFd	Heat Pump Heating Airflow Off Delay Time (default = 60 seconds)
Hnd	Heat Pump Heating Airflow On Delay Time (default = 5 seconds)
HSt	Percentage of high stage heat pump heating airflow to run during low stage operation. (default = 70%)
EHA	When heat pump heating and electric heat are running at the same time, this percentage is used for additional airflow trim.
dHE	Enables or disables dehumidification feature in the outdoor unit. (default = Enabled)
CbP	Balance point temperature. The Compressor will not operate below temperature. (Default = 0 ºF)
EbP	Backup Heat Balance Points
Hdi	Compressor run time between defrost cycles. (default = 30 minutes) (2 stage units)
CdL	Compressor off delay at the beginning and end of a defrost cycle. (default = 30 seconds)

SERVICING

Air Handler Display (Continued)

LED Display	Menu Description
FCL	View 6 most recent fault codes and Clear Fault Codes if desired (outdoor communicating units)
t9t	Menu is enabled if the CFS menu is set to 6. Select the target time the system will attempt to satisfy the thermostat.
SUP	Menu is enabled if the CFS menu is set to 6. Select the percentage past the target time when the system will enable electric heat operation during heat mode.
Ott	Menu is enabled if the CFS is set to 6. (Electric heat will run during the next heat call if the heat pump fails to satisfy the custom target time for this number of consecutive cycles) (default = 20 cycles)
utt	Menu is enabled if the CFS menu is set to 6. (If the addition of low stage electric heat is able to consecutively satisfy the thermostat under the set target time for this number of cycles, the system will transition to the heat pump for primary heating)
SdP	Menu is enabled if the CFS menu is set to 6. (This percentage will help determine when switching back to heat pump only operation is appropriate. Default = 20%. If target time = 20 minutes, the addition of low stage electric heat must statisfy the thermostat by less than 16 minutes. (target time - 20% default = 16 minutes)

COOL SETUP		
SUBMENU ITEM	***USER MODIFIABLE OPTIONS***	***COMMENTS***
CL Reset	YES or NO	Selecting to default factory setting.
Cool Airflow Trim Hi (C TR H)	-15% to +15% in 3% increments	Selects the cooling airflow trim amount.
Cool Airflow Trim Int (C TR I)	-15% to +15% in 3% increments	Selects the cooling airflow trim amount.
Cool Airflow Trim Low (C TR L)	-15% to +15% in 3% increments	Selects the cooling airflow trim amount.
Cool Airflow Profile	A, B, C, or D	Selects the cooling airflow profile.
Cool ON Delay	5, 10, 20, 30 seconds	Selects the indoor blower ON delay.
Cool OFF Delay	30, 60, 90, 120 seconds	Selects the indoor blower OFF delay.
Dehumidification Select	ON or OFF	Selecting OFF disables dehumidification; selecting ON enables dehumidification.

SET COOLING RUN VALUES (CL RUN VALUES)		
SUBMENU ITEM	***USER MODIFIABLE OPTIONS***	***COMMENTS***
Maximum Compressor RPS Range for Cooling (COOL RPS RANGE)	Five different compressor RPS ranges will be provided.	Select the appropriate range for the installed system configuration.
Maximum Compressor RPS Selection for Cooling (COOL RPS SELECT)	Ten compressor RPS values will be provided within the range selected in the COOL RPS RANGE menu	Select the appropriate compressor RPS for the installed system configuration.

HEAT SETUP		
SUBMENU ITEM	***USER MODIFIABLE OPTIONS***	***COMMENTS***
HT Reset	YES or NO	Selecting to default factory setting.
Heat Airflow Trim Hi (H TR H)	-15% to +15% in 3% increments	Selects the Heating airflow trim amount.
Heat Airflow Trim Int (H TR I)	-15% to +15% in 3% increments	Selects the Heating airflow trim amount.
Heat Airflow Trim Low (H TR L)	-15% to +15% in 3% increments	Selects the Heating airflow trim amount.
Heat ON Delay	5, 10, 15 seconds	Selects the indoor blower ON delay.
Heat OFF Delay	30, 50, 70, 90 seconds	Selects the indoor blower OFF delay.
Maximum Defrost Interval	30 min., 1hr., 1.5hrs. and 2hrs.	Selects time defrost interval

SET HEATING RUN VALUES (HT RUN VALUES)		
SUBMENU ITEM	***USER MODIFIABLE OPTIONS***	***COMMENTS***
Maximum Compressor RPS Range for Heating (HEAT RPS RANGE)	Five different compressor RPS ranges will be provided.	Select the appropriate range for the installed system configuration.
Maximum Compressor RPS Selection for Heating (HEAT RPS SELECT)	Ten compressor RPS values will be provided within the range selected in the HEAT RPS RANGE menu	Select the appropriate compressor RPS for the installed system configuration.

SERVICING

EMERGENCY MODE FOR EEV APPLICABLE INDOOR UNIT

WARNING

HIGH VOLTAGE
DISCONNECT ALL POWER BEFORE SERVICING OR INSTALLING THIS UNIT. MULTIPLE POWER SOURCES MAY BE PRESENT. FAILURE TO DO SO MAY CAUSE PROPERTY DAMAGE, PERSONAL INJURY OR DEATH.

Emergency mode is to only be used in a situation where communication between equipment (broken wires) or a failed thermostat cannot be immediately corrected or replaced. This mode will allow for cooling or heating to be activated without the need of communication wires or a thermostat. Once corrections have been made to wiring or the thermostat, emergency mode must be turned off and the system returned to normal operation (this applies to both the indoor and outdoor units). **NOTE:** Emergency mode does not control to a specific room temperature set point. Exact room temperature achieved is related to the building load at the time emergency mode is activated. This is only a temporary solution.

At first inspection, if the outdoor unit is displaying one of the following error codes: E51 (outdoor communication error), Eb0 (no indoor airflow), Eb9 (low indoor airflow), Ed2 (Indoor unit is too small and cannot provide airflow of outdoor unit) or the indoor unit is displaying error code E77 (no thermostat communications) it is acceptable to use emergency mode if the equipment cannot be immediately fixed. Cycling power to the equipment may temporarily clear error codes, but doing so may not fix the underlying problem. **NOTE:** If after initial power up communication issues occur due to faulty wires or a thermostat these error codes may not be displayed.

In emergency mode, the unit will function according to the mode selected on the appropriate dip switches. Operation in emergency mode must be limited to a minimum and should be viewed as a temporary solution before the issue with the unit is resolved and system operates in normal mode.

NOTE: In the emergency operation, the operating status will not be shown in the thermostat status menu or on the outdoor 7-segment displays. The 7-segment displays on indoor control board will display “EE”.

1. HEATING EMERGENCY MODE

Emergency Heating mode is to be used when communication between the indoor unit and thermostat is not functioning properly. This mode will run the electric heat strips independently of any thermostat in one of two modes: High Heat Level or Low Heat Level. Dip Switch Bank DS-6 (specifically dip switches S-21 and S-22) on the indoor control is used to engage emergency heating mode. Default setting for these two dip switches are in the OFF position (S21 set to ON and S22 set to ON will enable Low Heat Level Emergency Mode. S21 set to OFF and S22 set to ON will enable High Heat Level Emergency Mode).

NOTE: once equipment has been fixed, these dip switches must be placed back in the OFF position. During operation, the indoor fan and electric heater kit will be turned on and off at following intervals based on the Heat Level selected. 2 stage electric heater kits will be energized in stage 2.

	Heating On	Heating Off
High Heat Level	8 minutes	8 minutes
Low Heat Level	7 minutes	15 minutes

Emergency Heat Mode Airflow: DIP switches S-9, S-10, S-11 and S-12 must be set to the correct size electric heat kit that has been installed. These are located on dip switch bank DS-3 of the indoor control. See the Switch Bank DS-3 Indoor Control Board Settings table to properly select heater kit size.

To activate heating emergency mode, appropriately select switches S-21 and S-22 from dip switch bank DS-6 on the indoor control board depending on the heat level required in accordance with the Switch Bank DS-6 Indoor Control Board Settings table.

NOTE: During the heating emergency mode, outdoor unit must stop operation. Once the communication is established, heating emergency mode must be terminated so that the system resumes operation in normal mode. To eliminate the heating emergency mode, dip switches S-21 and S-22 from dip switch bank DS-6 on the indoor control board must be set back to default factory settings (normal operating mode).

SERVICING

Upon start up in emergency mode the circuit board may display an “Ed” error. This is an indication that the DIP switches on the control board need to be configured in accordance with the Electric Heating Airflow Table. Configuring the DIP switches to the unit will clear the error code.

Switch Bank DS-3 Indoor Control Board Settings								
Heater Kit Selection	Heater kW				Dip Switch Setting			
	AVPEC25B14A*	AVPEC37C14A*	AVPEC59D14A*	AVPEC61D14A*	S-9	S-10	S-11	S-12
No Heater	-	-	-	-	OFF*	OFF*	OFF*	OFF*
First	3	5	5	5	ON	ON	ON	ON
Second	5	6	6	6	ON	ON	ON	OFF
Third	6	8	8	8	ON	ON	OFF	ON
Fourth	8	10	10	10	ON	ON	OFF	OFF
Fifth	10	15	15	15	ON	OFF	ON	ON
Sixth	X	19	20	20	ON	OFF	ON	OFF
Seventh	X	X	X	25	ON	OFF	OFF	ON

Switch Bank DS-6 Indoor Control Board Settings			
Function		S-21	S-22
Normal operation		OFF*	OFF*
Emergency Mode	Cooling Emergency mode/Fan only Emergency mode	ON	OFF
	Heating Emergency mode (High heat level)	OFF	ON
	Heating Emergency mode (Low heat level)	ON	ON

Switch Bank DS-2 Outdoor Control Board Settings			
Function		S-1	S-2
Normal operation		OFF*	OFF*
Emergency Mode	Cooling Emergency mode (Low cool Level)	ON	OFF
	Cooling Emergency mode (Medium cool Level)	OFF	ON
	Cooling Emergency mode (High cool level)	OFF	OFF

NOTE: Default factory settings are marked with *.

SERVICING

2. COOLING EMERGENCY MODE

Cooling emergency mode is to be used when communication between the indoor and outdoor units is not functioning properly and temporary cooling operation is required. This mode enables the outdoor unit and indoor unit to run independently of each other. There are two key steps to setup Cooling Emergency Mode.

a. Select the appropriate airflow on the indoor unit and enable emergency indoor airflow operation (using Dip switches S-13 and S-14 of Switch Bank DS-4 on the indoor unit to select desired 25%, 50%, 75% or 100% airflow. In addition, set switch bank DS-6 dip switches S-21 to ON and S-22 to OFF enabling emergency indoor fan).
b. Select the desired cooling level at the outdoor unit (there are 3 levels available: Low Cool Level, Medium Cool Level, High Cool Level selectable by dip switch bank DS-2 on the outdoor unit). See Dip Switch Position DS2-1 and DS2-2 Table for cooling level selection.

Switch Bank DS-4 Indoor Fan Settings					
Function	**Value**	**SW13**	**SW14**	**SW15**	**SW16**
Fan Only Speed %	25	OFF	OFF	-	-
	50	ON*	OFF*	-	-
	75	OFF	ON	ON*	-
	100	ON	ON	OFF	-

During operation the indoor unit will provide constant airflow as selected (even if the compressor has stopped). The indoor unit will continue to operate the electronic expansion valve for refrigerant super heat control and the compressor will cycle at the interval selected by dip switch bank DS-2.

	ON time	**OFF time**	**Avg. Run Time**
Low Cool Level	7 minutes	15 minutes	30%
Medium Cool Level	8 minutes	10 minutes	50%
High Cool Level	15 minutes	6 minutes	70%

NOTE: This mode does not require a thermostat. Any thermostat requests will be ignored while in emergency operation.

NOTE: Set indoor DS-4 (Indoor fan setting) and DS-6 (Indoor emergency mode enable) before setting outdoor DS-2 dip switch settings. Otherwise, the compressor may be damaged in operation.

NOTE: When proper communication is established, these switches must be returned to default settings

The compressor speed will automatically adjust based on the outdoor ambient temperature. If ambient temperature is higher than 95°F, the outdoor unit can operate at 100% compressor speed. If ambient temperature is lower than 70°F, the unit will run at 50% compressor speed. Between 95°F and 70°F, the compressor speed will adjust linearly as shown.

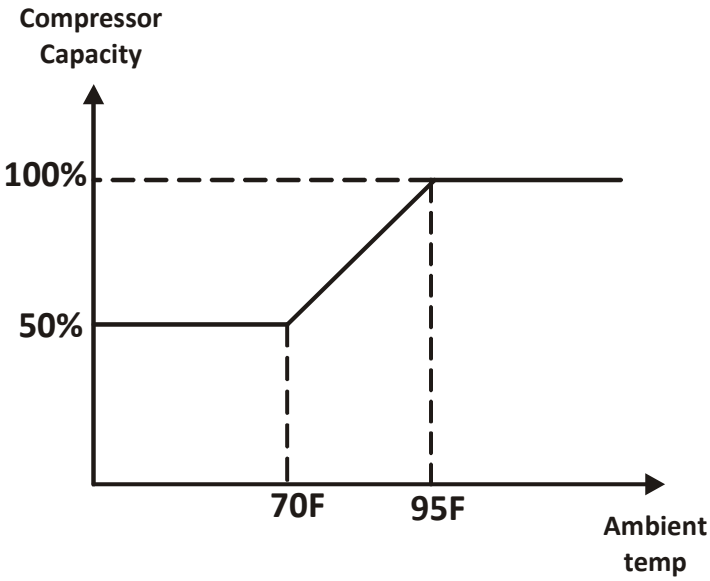

COOLING EMERGENCY MODE WIRING FOR TXV APPLICABLE INDOOR UNIT

Cooling emergency mode is available when using a TXV applicable indoor unit. To energize the blower at the appropriate speed, standard Legacy wiring is required. The image below shows how the thermostat input terminals are to be wired when selecting a cooling airflow. **NOTE:** The blower will run continuously with this wiring which is required. The outdoor unit will cycle as described in the Cooling Emergency Mode section when appropriate dip switch modes are set.

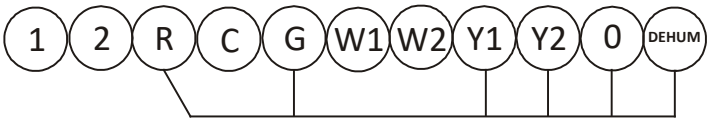

INDOOR UNIT INTEGRATED CONTROL MODULE

NOTE: Emergency heating mode is not available with TXV applicable indoor units. If communications still exist between the indoor unit and thermostat, the thermostat should be used to provide heating calls.

Dipswitch Default Factory Settings			
Switch #		**Setting**	**Function**
ID DS-1	1	OFF	No Use
	2	OFF	No Use
	3	OFF	No Use
	4	OFF	No Use
ID DS-2	5	OFF	No Use
	6	OFF	No Use
	7	OFF	No Use
	8	OFF	No Use
ID DS-3	9	OFF	Heater Kit Selection in Emergency Mode
	10	OFF	Heater Kit Selection in Emergency Mode
	11	OFF	Heater Kit Selection in Emergency Mode
	12	OFF	Heater Kit Selection in Emergency Mode
ID DS-4	13	ON	Allow in Emergency Mode (Fan Emergency Mode)
	14	OFF	Allow in Emergency Mode (Fan Emergency Mode)
	15	ON	EEV Enable**
	16	OFF	No Use
ID DS-5	17	ON	Emergency EEV Opening
	18	OFF	Emergency EEV Opening
	19	OFF	EEV Emergency Mode**
	20	OFF	No Use
ID DS-6	21	OFF	Emergency mode (Cooling and Heating Emergency Mode)
	22	OFF	Emergency mode (Cooling and Heating Emergency Mode)
	23	OFF	No Use
	24	OFF	No Use
OD DS-1	1	ON	CT Communication Enable*
	2	ON	CT Communication Enable*
OD DS-2	1	OFF	Cooling Emergency mode*
	2	OFF	Cooling Emergency mode*

* Must be set at factory setting to operate the normal mode.
** Must be set at factory setting indoor unit with EEV. It's prohibited to change setting.

MODE DISPLAY INTRODUCTION

A 3-digit display is provided on the Control board as a backup tool to the thermostat for reading faults, fault history, monitoring and setting up the unit. Follow the information provided in this section to learn how to use the mode display.

DISPLAY

The display consists of 3 digits.

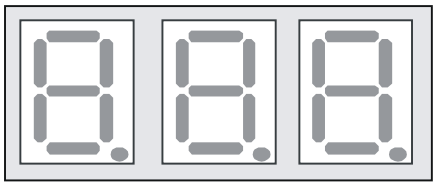

SEG1 SEG2 SEG3

OFF

ON

Blink interval: 0.4 sec. On - 0.4 sec. Off

DISPLAY BUTTON LAYOUT

The display buttons shown can be used to navigate and select items:

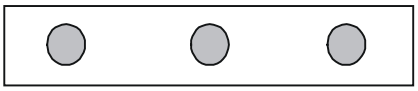

TEST RECALL LEARN

OR

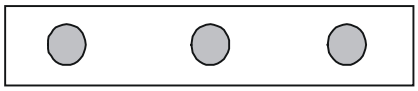

LEARN RECALL TEST

Examples of button layout are shown above.
Identify correct display buttons on your unit Control board.

MODES

There are 5 modes which can be accessed using the setting display:
FAULT CODE, FAULT HISTORY, MONITORING, SETTING MODE 1 and SETTING MODE 2.

To enter any of these modes, use the schemes shown in this section. Each mode has its own corresponding "Screen #" within the display itself which allows the user to navigate and use the features. (Example: The Fault Code is accessed and displayed from "Screen 0" of the 7-segment display. The Fault History is accessed and display using "Screen 1" of the display, etc.)

MODE	FUNCTION	DISPLAY SCREEN #
Fault Code Display	Present fault (if any).	0 (Default)
Fault Code History	6 Recent faults stored.	1
Monitoring Mode	*Monitors system values.	2
Setting Mode 1	*Can change system settings	3
Setting Mode 2	*Can change system settings.	4

**See tables at the end of this section.*

NAVIGATING THROUGH THE DISPLAY SCREENS

SCREEN 0 The home or default screen on the display. This shows the most recent fault.
SCREEN 1 To access, hold the RECALL button for 5 seconds at screen 0.
SCREEN 2 To access, hold the RECALL button for 5 seconds at screen 1.
SCREEN 3 To access, hold the RECALL button for 5 seconds at screen 2.
SCREEN 4 To access, hold the RECALL and TEST buttons simultaneously for 5 seconds at screen 2.
To return to SCREEN 0 of the display, press the LEARN button.

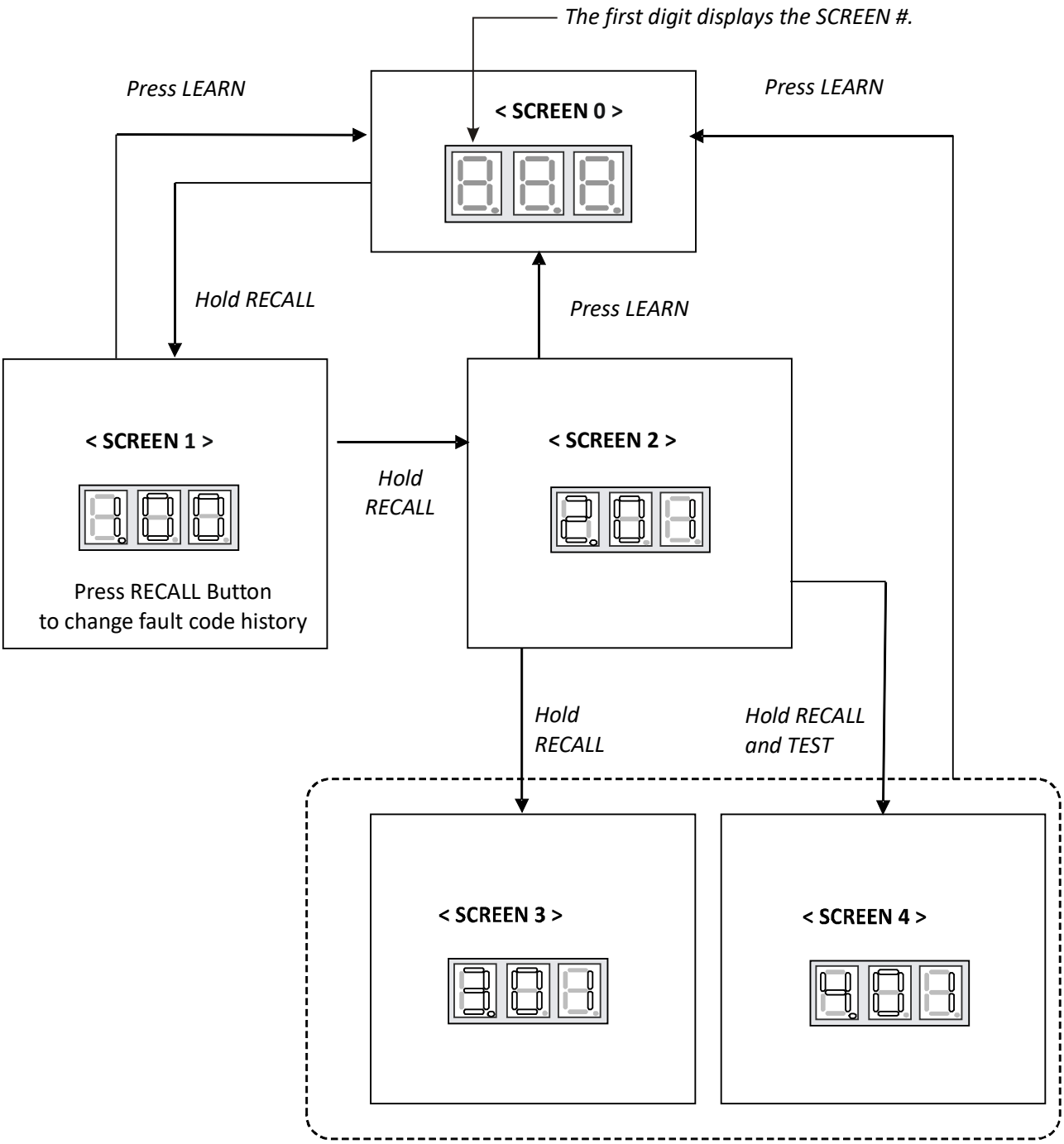

FAULT CODE HISTORY NAVIGATION

< SCREEN 1>

This mode will allow the user to see the six most recent system faults.
For a list of the fault codes, please see the TROUBLESHOOTING tables in this document.

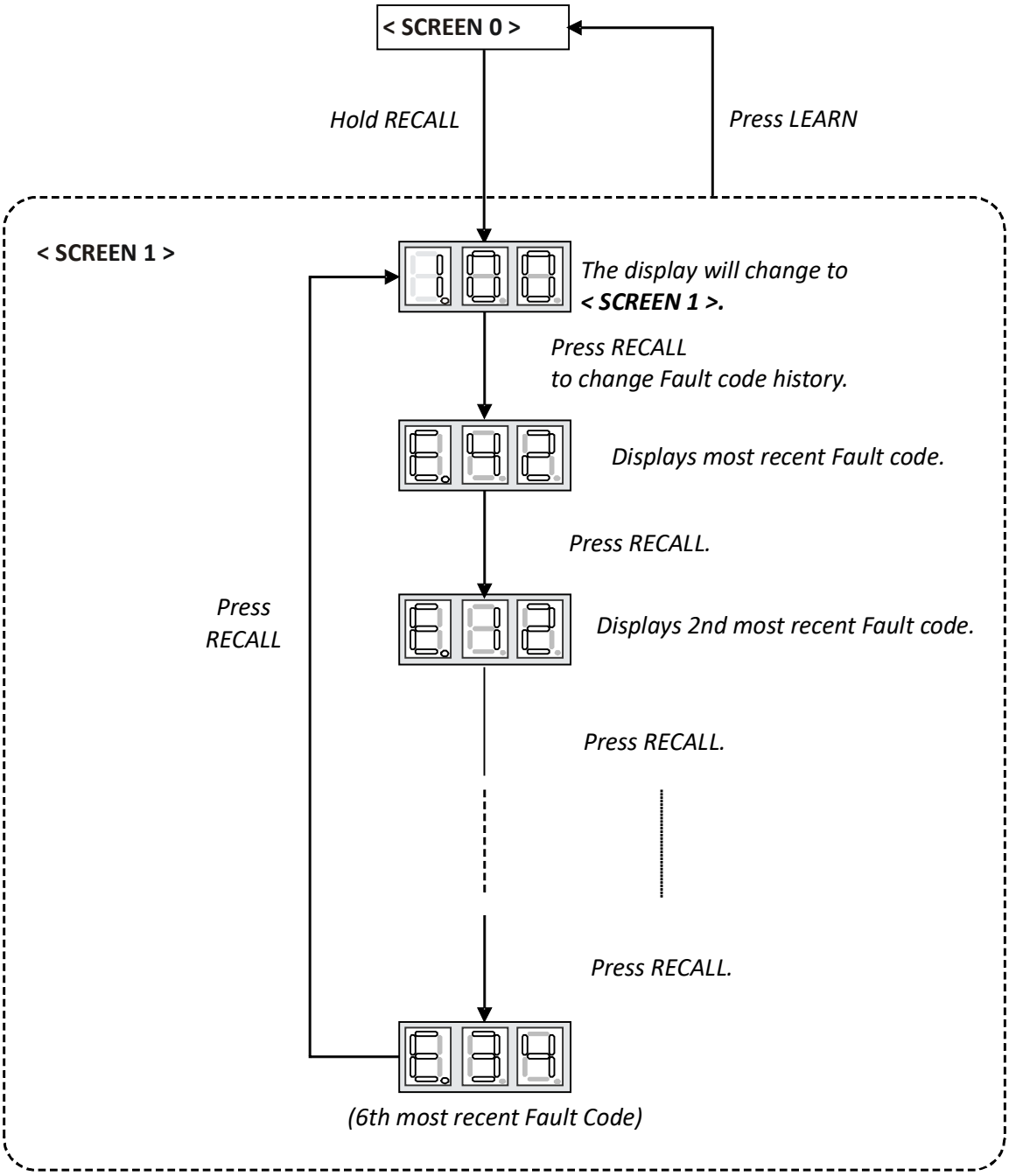

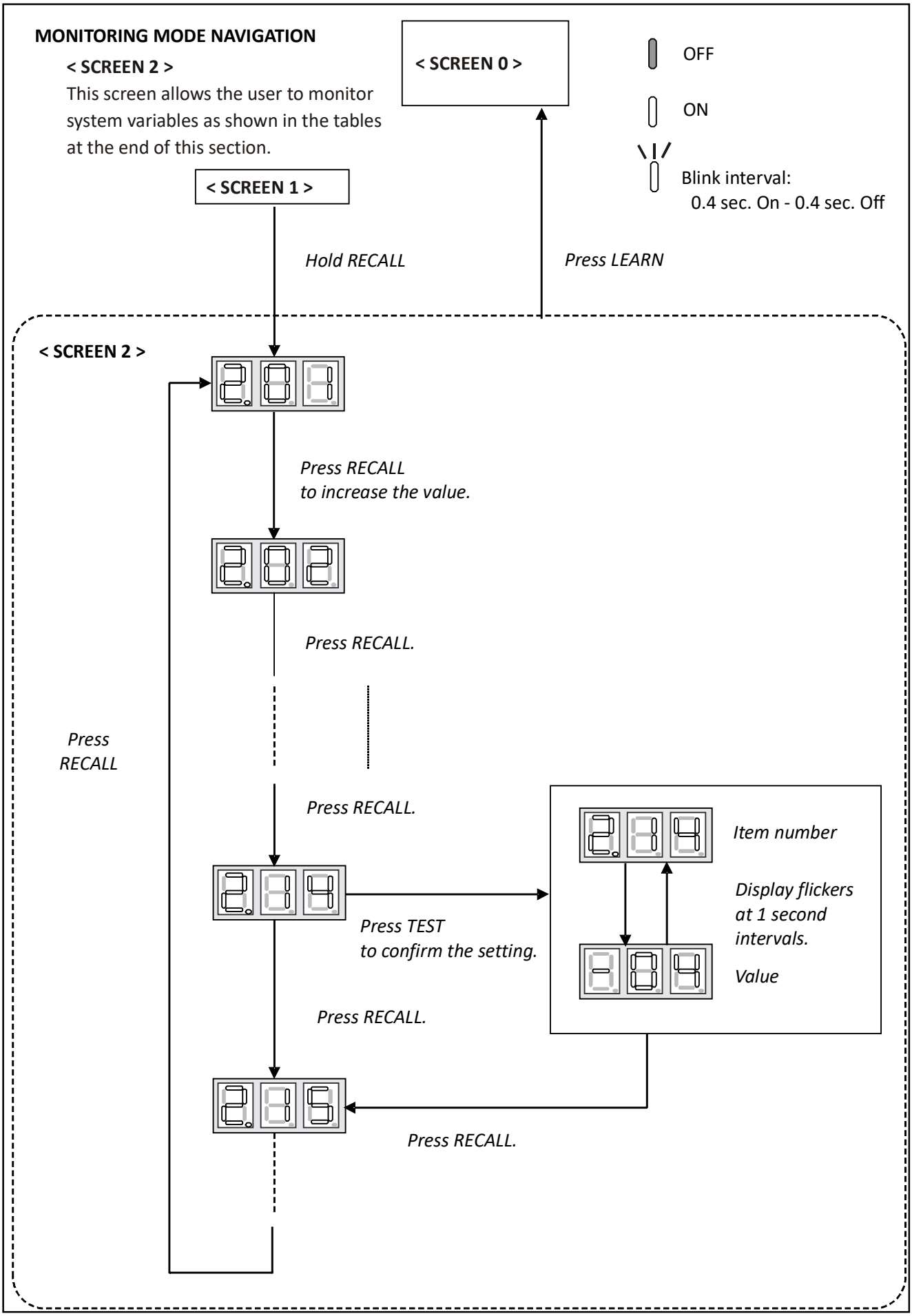
MONITORING MODE NAVIGATION
< SCREEN 2 >
This screen allows the user to monitor system variables as shown in the tables at the end of this section.
< SCREEN 0 >
OFF
ON
Blink interval:
0.4 sec. On - 0.4 sec. Off
< SCREEN 1 >
Hold RECALL
Press LEARN
< SCREEN 2 >
Press RECALL
to increase the value.
Press RECALL.
Press
RECALL
Press RECALL.
Item number
Display flickers
at 1 second
intervals.
Value
Press TEST
to confirm the setting.
Press RECALL.
Press RECALL.

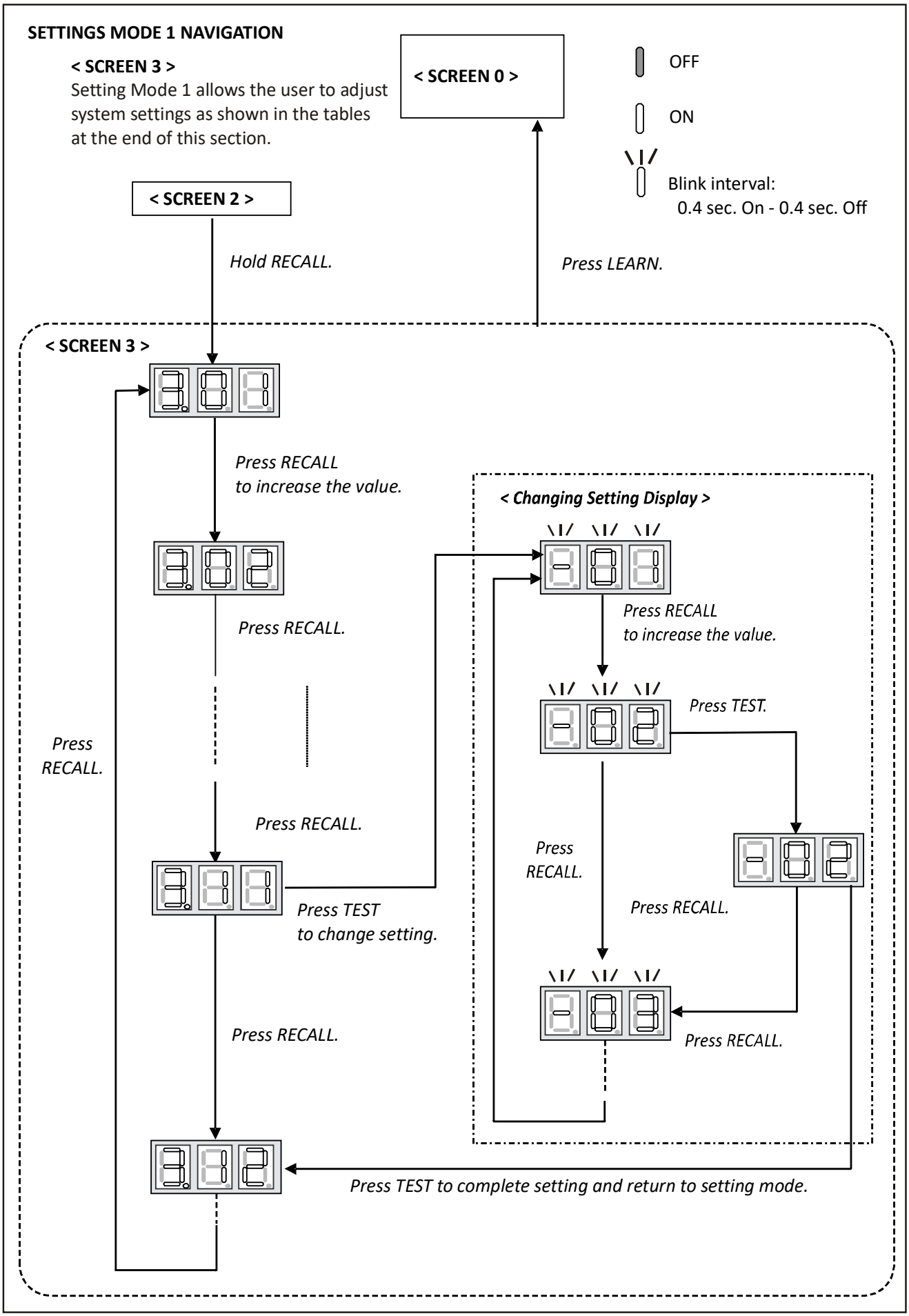
SETTINGS MODE 1 NAVIGATION
< SCREEN 3 >
Setting Mode 1 allows the user to adjust system settings as shown in the tables at the end of this section.
< SCREEN 0 >
OFF
ON
Blink interval:
0.4 sec. On - 0.4 sec. Off
< SCREEN 2 >
Hold RECALL.
Press LEARN.
< SCREEN 3 >
Press RECALL to increase the value.
Press RECALL.
Press RECALL.
Press RECALL.
Press TEST to change setting.
Press RECALL.
Press TEST to complete setting and return to setting mode.
< Changing Setting Display >
Press RECALL to increase the value.
Press TEST.
Press RECALL.
Press RECALL.
Press RECALL.

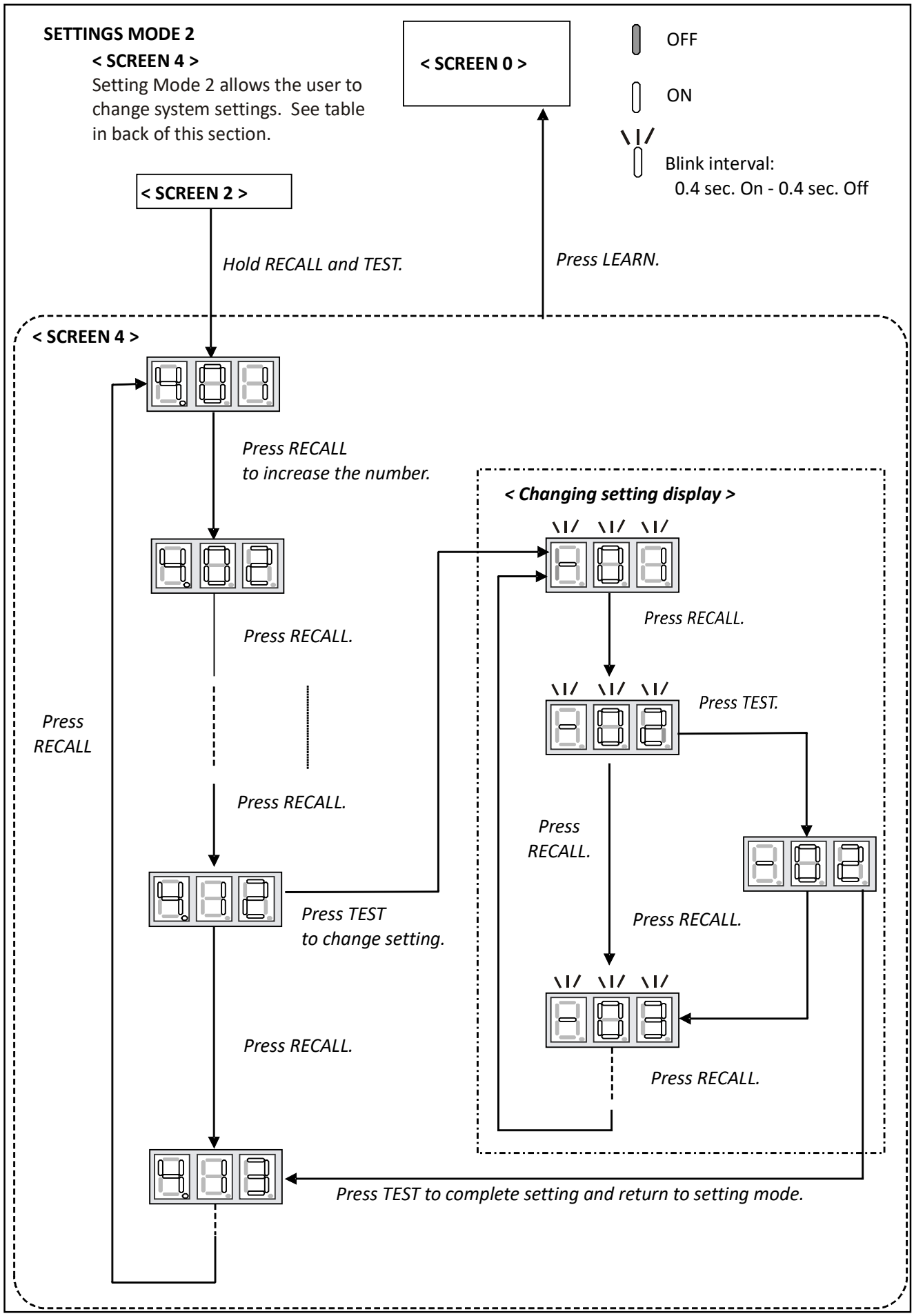
SETTINGS MODE 2
< SCREEN 4 >
Setting Mode 2 allows the user to change system settings. See table in back of this section.
< SCREEN 0 >
OFF
ON
Blink interval:
0.4 sec. On - 0.4 sec. Off
< SCREEN 2 >
Hold RECALL and TEST.
Press LEARN.
< SCREEN 4 >
Press RECALL
to increase the number.
Press RECALL.
Press RECALL.
Press RECALL
Press TEST
to change setting.
Press RECALL.
< Changing setting display >
Press RECALL.
Press TEST.
Press
RECALL.
Press RECALL.
Press RECALL.
Press TEST to complete setting and return to setting mode.

SCREEN 0 (Display FAULT CODE)

Setting No.	Contents	Notes
1	Fault code (present)	

SCREEN 1 (Display FAULT CODES)

Setting No.	Contents	Notes
1	Fault code (latest)	Latest
2	Fault code (2nd)	2nd
3	Fault code (3rd)	3rd
4	Fault code (4th)	4th
5	Fault code (5th)	5th
6	Fault code (6th)	6th

SCREEN 2 (MONITOR MODE)

Setting No.	Contents	Notes
1	Compressor operation time	unit：hr (Multiply by 200,)
2	Operation code	0: Stop 1: Cooling Start-up 2: Heating Start-up 3: Oil Return Operation 4: Heating Operation 5: Defrost Operation 6: Cooling Operation
3	Compressor Reduction Mode	0:OFF,1:ON
4	% demand	unit：% (Cut off the decimal first place.)
5	act % demand	unit：% (Cut off the decimal first place.)
6	Requested ID CFM	unit：CFM (Multiply by 10)
7	Reported ID CFM	unit：CFM (Multiply by 10)
8	Outdoor FAN TAP	0: Off; 1: Low Tap; 2: Medium Tap; 3: High Tap
9	Ta (Outdoor Air Temperature)	unit：F
10	Td (Discharge Temperature)	unit：F
11	Tm (Outdoor Coil Temperature)	unit：F
12	Tb (Defrost Sensor Temperature)	unit：F
13	Tl (Liquid Temperature)	unit：F
14	Pressure Sensor	unit：PSI
15	Ts (Suction Temperature)	unit：F

SCREEN 3 (SETTING MODE 1)

Setting No.	Contents	Setting	Notes
1	Cool Airflow Trim High	0:-15% 6:3% 1:-12% 7:6% 2:-9% 8:9% 3:-6% 9:12% 4:-3% 10:15% **5:0%**	
2	Cool Airflow Trim Int	0:-15% 6:3% 1:-12% 7:6% 2:-9% 8:9% 3:-6% 9:12% 4:-3% 10:15% **5:0%**	
3	Cool Airflow Trim Low	0:-15% 6:3% 1:-12% 7:6% 2:-9% 8:9% 3:-6% 9:12% 4:-3% 10:15% **5:0%**	
4	Cool Profile	0:A 2:C 1:B **3:D**	
5	Cool ON Delay	**0:5sec.** 2:20sec. 1:10sec. 3:30sec.	
6	Cool OFF Delay	**0:30sec.** 2:90sec. 1:60sec. 3:120sec.	
7	Dehumidfication Select	**0:ON** 1:OFF	
8	Heat Airflow Trim High	0:-15% 6:3% 1:-12% 7:6% 2:-9% 8:9% 3:-6% 9:12% 4:-3% 10:15% **5:0%**	
9	Heat Airflow Trim Int	0:-15% 6:3% 1:-12% 7:6% 2:-9% 8:9% 3:-6% 9:12% 4:-3% 10:15% **5:0%**	
10	Heat Airflow Trim Low	0:-15% 6:3% 1:-12% 7:6% 2:-9% 8:9% 3:-6% 9:12% 4:-3% 10:15% **5:0%**	
11	Heat ON Delay	**0:5sec.** 2:15sec. 1:10sec.	
12	Heat OFF Delay	**0:30sec.** 2:70sec. 1:50sec. 3:90sec.	

SCREEN 4 (SETTING MODE 2)

Setting No.	Contents	Setting	Notes
1	Maximum Defrost Interval	**0: 30min.** 1: 60min. 2: 90min. 3: 120min.	
2	Set Maximum Current	N/A	Future Use
3	Vertical Rise	0:Same Level **1:Outdoor Lower** 2:Indoor Lower	
4	System Verification Test	0:ON **1:OFF**	
7	Force Defrost Cycle	0:ON **1:OFF**	
8	Pump Down	0:ON **1:OFF**	
9	Charge Mode	0:ON **1:OFF**	
10	Maximum Compressor RPS for Cooling	*	
11	Maximum Compressor RPS for Heating	*	
12	BOOST MODE Selection	**0:ON**, 1:OFF	
13	BOOST MODE Temperature	**0:105F**, 1:100F, 2:95F, 3:90F, 4:85F, 5:80F, 6:75F, 7:70F, 8:Always ON	

NOTE: Parameters as per factory setting are highlighted in bold and underlined.

TROUBLESHOOTING

HEATING ANALYSIS CHART

POSSIBLE CAUSE X IN ANALYSIS GUIDE INDICATE "POSSIBLE CAUSE"	Comp discharge temp > 200F	Comp discharge temp < 105F	Comp discharge SH > 70F	Comp discharge SH < 20F	High pressure > 490psi	High pressure SSV< 270psi	High pressure LSV< 270psi	LSV SC > 12F	LSV SC < 4F	Low pressure < 40psi	Requested % demand < Actual %	Requested % demand > Actual %	Repeated stop/start	Weak heating	No switch heating	Noise	Incomplete defrost operation	Stop operation	Sweating liquid line
Liquid stop valve does not fully open	X		X		X			X		X		X	X	X			X		X
Gas stop valve does not fully open	X		X		X				X	X		X	X	X			X		
Line set restriction	X		X		X				X	X		X	X	X			X		X
Line set length is too long					X		X												X
Blocked filter-dryer	X		X		X				X	X		X	X	X			X		X
OD EEV coil failure	X	X	X	X	X	X	X	X	X	X	X	X	X	X			X	X	
OD EEV failure	X	X	X	X	X	X	X	X	X	X	X	X	X	X			X	X	
ID EEV coil failure	X		X		X		X		X	X	X	X	X	X			X	X	X
ID EEV failure	X		X		X		X		X	X	X	X	X	X			X	X	X
Check valve failure – Leakage		X		X					X		X		X	X				X	
High Pressure switch failure																		X	
Pressure sensor failure			X	X	X	X	X	X	X		X	X	X	X				X	
Suction temp sensor failure	X	X	X	X				X	X	X	X	X	X	X				X	
Discharge temp sensor failure	X	X	X	X							X	X	X	X				X	
Coil temp sensor failure										X		X	X	X			X	X	
Defrost sensor failure										X		X	X	X			X	X	
Liquid temp sensor failure								X	X									X	X
Ambient temp sensor failure					X					X		X	X	X				X	X
OD recirculation	X		X			X	X			X		X	X	X					
ID recirculation	X		X		X							X	X	X					
Dirty OD Heat-exchanger	X		X			X	X			X		X	X	X				X	
Dirty ID Heat-exchanger	X		X		X							X	X	X					
Outdoor Ambient temp is too high					X							X	X	X				X	X
Outdoor Ambient temp is too low	X	X	X			X	X		X	X		X	X	X					
ID suction temp is too high	X				X							X	X	X					
ID suction temp is too low						X	X												X
Mixture of non-condensible gas	X		X		X				X	X		X	X	X					
OD fan motor failure	X		X			X	X			X		X	X	X				X	
RV failure			X			X	X					X	X	X	X		X	X	
RV coil failure			X			X	X					X	X	X			X		
Over charge			X	X	X			X			X	X	X	X					X
Under charge	X	X	X			X	X		X	X			X	X					X
Leak	X	X	X			X	X		X	X			X	X					X
ID failure	X	X	X	X	X	X	X	X	X	X	X	X	X	X		X	X	X	X
OD Control Board failure																		X	
Compressor failure	X	X	X	X		X	X					X	X	X		X	X	X	
Cooling loop is not attached												X	X	X					
Cooling loop grease is not enough												X	X	X					
Low ID CFM	X				X				X			X	X	X				X	

Outdoor Normal Temperature Operating Range: 17-62°F
Indoor Normal Temperature Operating Range: 65-85°F

Outdoor Normal Temperature Operating Range: 67-115°F / Indoor Normal Temperature Operating Range: 65 - 85°F

WARNING

AVOID CONTACT WITH THE CHARGED AREA.

- **NEVER TOUCH THE CHARGED AREA BEFORE CONFIRMING THAT THE RESIDUAL VOLTAGE IS 50 VOLTS OR LESS.**

1. **SHUT DOWN THE POWER AND LEAVE THE CONTROL BOX FOR 10 MINUTES.**
2. **MAKE SURE TO TOUCH THE EARTH GROUND TERMINAL TO RELEASE THE STATIC ELECTRICITY FROM YOUR BODY (TO PREVENT FAILURE OF THE PC BOARD).**
3. **MEASURE THE RESIDUAL VOLTAGE IN THE SPECIFIED MEASUREMENT POSITION USING A VOM WHILE PAYING ATTENTION NOT TO TOUCH THE CHARGED AREA.**
4. **IMMEDIATELY AFTER MEASURING THE RESIDUAL VOLTAGE, DISCONNECT THE CONNECTORS OF THE OUTDOOR UNIT'S FAN MOTOR. (IF THE FAN BLADE ROTATES BY STRONG WIND BLOWING AGAINST IT, THE CAPACITOR WILL BE CHARGED, CAUSING THE DANGER OF ELECTRICAL SHOCK.)**

TROUBLESHOOTING

COOLING ANALYSIS CHART

POSSIBLE CAUSE X IN ANALYSIS GUIDE INDICATE "POSSIBLE CAUSE"	Comp discharge temp > 200F	Comp discharge temp < 105F	Comp discharge SH > 70F	Comp discharge SH < 20F	High pressure > 490psi	High pressure < 255psi	LSV SC > 12F	LSV SC < 4F	OD SSV SH > 20F	OD SSV SH < 4F	Low pressure > 185psi	Low pressure < 100psi	Requested % demand < Actual	Requested % demand > Actual	Repeated stop/start	Weak cooling	No switch cooling	Noise	Stop operation
Liquid stop valve does not fully open	X		X		X		X		X			X		X	X	X		X	
Gas stop valve does not fully open	X		X									X		X	X	X			
Line set restriction	X		X		X		X		X			X		X	X	X		X	
Line set length is too long									X			X			X	X		X	
Blocked filter-dryer	X		X		X		X		X			X		X	X	X		X	
OD EEV coil failure														X	X	X			X
OD EEV failure														X	X	X			
ID EEV coil failure	X	X	X	X	X	X	X	X	X	X	X	X	X	X	X	X			X
ID EEV failure	X	X	X	X	X	X	X	X	X	X	X	X	X	X	X	X			
Check valve failure – Blocked	X		X		X			X	X			X		X	X	X			
High Pressure switch failure																			X
Pressure sensor failure	X										X	X		X	X	X			X
Suction temp sensor failure													X	X		X			
Discharge temp sensor failure	X	X	X	X									X	X	X	X			X
Coil temp sensor failure				X	X	X							X	X	X	X			X
Defrost sensor failure																			
Liquid temp sensor failure																			
Ambient temp sensor failure				X	X	X							X	X	X	X			
OD recirculation	X		X		X									X	X	X		X	
ID recirculation		X		X						X		X	X	X	X	X			
Dirty OD Heat-exchanger	X		X		X									X	X	X		X	
Dirty ID Heat-exchanger		X		X				X		X		X	X	X	X	X			
Outdoor Ambient temp is too high	X		X		X					X				X	X	X		X	
Outdoor Ambient temp is too low		X		X		X	X					X	X	X	X	X			
ID suction temp is too high									X		X								
ID suction temp is too low		X		X				X		X		X	X	X	X	X			
Mixture of non-condensible gas	X		X		X			X	X			X		X	X	X		X	
OD fan motor failure	X		X		X			X						X	X	X		X	X
RV failure	X		X			X					X			X	X	X	X		X
RV coil failure	X		X			X					X			X	X	X	X		X
Over charge	X	X	X	X	X		X			X			X			X			X
Under charge	X	X	X			X		X	X			X				X		X	
Leak	X	X	X			X		X	X			X		X	X	X		X	
OD Control Board Failure																			X
ID Failure	X	X	X	X	X	X	X	X	X	X	X	X	X	X	X	X	X		X
Compressor failure	X	X	X			X					X			X	X	X		X	X
Cooling loop is not attached														X	X	X			
Cooling loop grease is not enough														X	X	X			
Low ID CFM		X		X						X		X	X	X	X	X			X

Outdoor Normal Temperature Operating Range: 67-115°F

Indoor Normal Temperature Operating Range: 65 - 85°F

Outdoor Normal Temperature Operating Range: 17-62°F / Indoor Normal Temperature Operating Range: 65 - 85°F

WARNING

AVOID CONTACT WITH THE CHARGED AREA.

- **NEVER TOUCH THE CHARGED AREA BEFORE CONFIRMING THAT THE RESIDUAL VOLTAGE IS 50 VOLTS OR LESS.**

1. **SHUT DOWN THE POWER AND LEAVE THE CONTROL BOX FOR 10 MINUTES.**
2. **MAKE SURE TO TOUCH THE EARTH GROUND TERMINAL TO RELEASE THE STATIC ELECTRICITY FROM YOUR BODY (TO PREVENT FAILURE OF THE PC BOARD).**
3. **MEASURE THE RESIDUAL VOLTAGE IN THE SPECIFIED MEASUREMENT POSITION USING A VOM WHILE PAYING ATTENTION NOT TO TOUCH THE CHARGED AREA.**
4. **IMMEDIATELY AFTER MEASURING THE RESIDUAL VOLTAGE, DISCONNECT THE CONNECTORS OF THE OUTDOOR UNIT'S FAN MOTOR. (IF THE FAN BLADE ROTATES BY STRONG WIND BLOWING AGAINST IT, THE CAPACITOR WILL BE CHARGED, CAUSING THE DANGER OF ELECTRICAL SHOCK.)**

TROUBLESHOOTING

ClimateTalk Fault Code	PCB LED Display	Transmitted ClimateTalk Message	Thermostat Fault	Probable Causes	Corrective Actions
12	E12	OD CTRL FAIL1	Indicates a general memory error.	● High electrical noise ● Faulty control board	● Replace control board if necessary
13	E13	HI PRESSURE C (C = CRITICAL)	This error indicates the equipment is experiencing frequent high pressure faults.	● Blocked/restricted condenser coil and/or lines ● Stop valve not completely open ● Overcharge ● Outdoor fan not running ● High pressure switch (HPS) inoperable ● Faulty TXV ● Faulty control board	● Check and clean condenser coil and/or lines ● Check the opening of stop valve, should be full open; Repair/replace if needed ● Check refrigerant charge level; Adjust if needed ● Check outdoor fan motor & wiring; Repair/replace if needed ● Check TXV; Replace if needed ● Replace control board if necessary
14	-	HI PRESSURE M (M = MINOR)	This error indicates the equipment is experiencing frequent high pressure faults. Control has determined continued operation is acceptable. This indicates they may be a problem with the equipment.	● Blocked/restricted condenser coil and/or lines ● Stop valve not completely open ● Overcharge ● Outdoor fan not running ● High pressure switch (HPS) inoperable ● Faulty TXV ● Faulty control board	● Check and clean condenser coil and/or lines ● Check the opening of stop valve, should be full open; Repair/replace if needed ● Check refrigerant charge level; Adjust if needed ● Check outdoor fan motor & wiring; Repair/replace if needed ● Check TXV; Replace if needed ● Replace control board if necessary ● Check high pressure switch; Replace if necessary
15	E15	LOW PRESSURE C	This error indicates the equipment is experiencing frequent low pressure faults.	● Stop valve not completely open ● Restriction in refrigerant lines ● Low refrigerant charge ● Refrigerant leak ● Low pressure sensor inoperable or not properly connected ● Indoor fan motor not functioning correctly ● Faulty TXV ● Faulty control board	● Check the opening of stop valve, should be full open; Repair/replace if needed ● Check for restrictions in refrigerant line; Repair/replace if needed ● Check refrigerant charge level; Adjust if needed ● Test for system leaks using leak test procedure ● Check the connection to low pressure sensor; Repair/replace if needed ● Check TXV; Replace if needed ● Check indoor blower motor & wiring; Repair/replace if needed ● Replace control board if necessary
16	-	LOW PRESSURE M	This error indicates the equipment is experiencing frequent low pressure faults. Control has determined continued operation is acceptable. This indicates they may be a problem with the equipment.	● Stop valve not completely open ● Restriction in refrigerant lines ● Low refrigerant charge ● Refrigerant leak ● Low pressure sensor inoperable or not properly connected ● Indoor fan motor not functioning correctly ● Faulty TXV ● Faulty control board	● Check the opening of stop valve, should be full open; Repair/replace if needed ● Check for restrictions in refrigerant line; Repair/replace if needed ● Check refrigerant charge level; Adjust if needed ● Test for system leaks using leak test procedure ● Check the connection to low pressure sensor; Repair/replace if needed ● Check TXV; Replace if needed ● Check indoor blower motor & wiring; Repair/replace if needed ● Replace control board if necessary
17	E17	COMPRESSOR FAIL	This error indicates the equipment is experiencing frequent compressor faults.	● Stop valve not completely open ● The compressor wire is lost phase ● Compressor motor failure	● Check the opening of stop valve, should be full open; Repair/replace if needed ● Check the wire between control board and compressor ● Inspect compressor motor for proper function; Replace if necessary
18	E18	OD CTRL FAIL2	Indicates the control board may need to be replaced.	● Outdoor fan motor not connected properly ● Faulty control board ● Noise	● Check wiring from Outdoor fan motor to control board; Repair if needed. ● Replace control board if necessary
19	E19	PCB OR FAN FAIL	This error indicates the equipment is experiencing frequent outdoor control board and/or motor faults.	● Obstruction in fan rotation ● Outdoor fan motor not connected properly ● Outdoor fan not running ● Faulty control borad ● Noise	● Check and clean grille or any debris ● Check wiring from Outdoor fan motor to control board; Repair if needed ● Check outdoor fan motor & wiring. Repair/replace if needed ● Replace control board if necessary
20	E20	EEV OPEN CKT	EEV coil is not connected.	● Outdoor EEV coil is not connected. ● Faulty outdoor EEV coil.	● Check outdoor EEV coil connection. Repair/replace as needed.
21	E21	EEV CTRL FAIL	This error indicates the equipment is experiencing frequent low discharge superheat faults.	● Thermistors inoperable or improperly connected ● Faulty TXV ● Faulty outdoor EEV coil ● Faulty outdoor EEV ● Over charge ● Faulty pressure sensor ● Faulty control board	● Check the connection to thermistors; Repair/replace if needed ● Check TXV; Replace/repair if needed ● Check outdoor EEV coil; Repair/replace if needed ● Check outdoor EEV; Replace/repair if needed ● Check refrigerant charge level; Adjust if needed ● Check pressure sensor; Repair/replace if needed ● Replace control board if necessary

(*1) This message is displayed when using the CTK04 thermostat

ClimateTalk Fault Code	PCB LED Display	Transmitted ClimateTalk Message	Thermostat Fault	Probable Causes	Corrective Actions
22	E22	HI DISCH TEMP	This error indicates the equipment is experiencing frequent high discharge temperature faults. Discharge thermistor is not put on correct position.	● Discharge thermistor inoperable or improperly connected ● Discharge thermistor is put on incorrect position or off ● Low refrigerant charge ● Overcharge ● Faulty compressor	● Check discharge thermistor resistance and connections; Repair/replace as needed ● Check discharge thermistor position ● Check refrigerant charge level; Adjust if needed ● Check the compressor; Repair/replace if needed
23	E23	DISCH TEMP FAIL	The control has detected that the Discharge Temperature Sensor is out of range.	● Discharge thermistor inoperable or improperly connected	● Check discharge thermistor resistance and connections; Repair/replace as needed
24	E24	HPS OPEN	The high pressure switch is open.	● High pressure switch (HPS) inoperable	● Check resistance on HPS to verify operation; Replace if needed
25	E25	AIR SENSOR FLT	The outdoor air temperature sensor is open or shorted.	● Faulty outdoor thermistor sensor or disconnect	● Inspect and test sensor; Replace sensor if needed
26	E26	PRESSURE SENSOR	The control determines that the pressure sensor is not reacting properly.	● Low pressure sensor inoperable or not properly connected	● Check the connection to low pressure sensor; Repair/replace if needed
27	E27	COIL TEMP FAIL1	The control has detected that the Outdoor Defrost Sensor is out of range.	● Outdoor defrost thermistor inoperable or not properly connected	● Check the connection to OD defrost thermistor; Repair/replace if needed
28	E28	COIL TEMP FAIL2	The control has detected that the Outdoor Coil Temperature Sensor is out of range.	● Outdoor coil thermistor inoperable or not properly connected	● Check the connection to OD coil thermistor; Repair if needed
29	E29	LIQ TEMP FAIL	The control has detected that the Liquid Temperature Sensor is out of range.	● Liquid thermistor inoperable or not properly connected	● Check the connection to liquid thermistor; Repair/replace if needed
30	E30	OD CTRL FAIL3	Indicates the control board may need to be replaced.	● Wiring to control board disconnected ● Faulty control board ● Noise	● Check wiring to control board; Repair as needed ● Replace control board if necessary
32	E32	HI TEMP CTRL1	This error indicates the equipment is experiencing high temperature faults on the outdoor control board.	● Ambient air conditions too high ● Cooling bracket screw(s) missing or not properly fastened ● No or poor thermal grease coating between cooling plumbing and cooling bracket on control board ● No flow or limited flow through control board cooling circuit (potential restriction in line or low refrigerant) ● Stop valve not completely open	● Cycle power; re-try during usable ambient temperature range ● Verify cooling bracket screws in place and secure; Secure fasteners as needed ● Check thermal grease inside cooling bracket on control board; Apply additional grease as needed ● Check for restriction in line ● Check refrigerant charge level; Adjust if needed ● Check the opening of stop valve, should be full open; Repair/replace if needed
33	-	HI TEMP CTRL2	This error indicates the equipment is experiencing high temperature faults on the outdoor control board. Control has determined continued operation is acceptable. This indicates they may be a problem with the equipment.	● Ambient air conditions too high ● Cooling bracket screw(s) missing or not properly fastened ● No or poor thermal grease coating between cooling plumbing and cooling bracket on control board ● No flow or limited flow through control board cooling circuit (potential restriction in line or low refrigerant) ● Stop valve not completely open	● Cycle power; re-try during usable ambient temperature range ● Verify cooling bracket screws in place and secure; Secure fasteners as needed ● Check thermal grease inside cooling bracket on control board; Apply additional grease as needed ● Check for restriction in line ● Check refrigerant charge level; Adjust if needed ● Check the opening of stop valve, should be full open; Repair/replace if needed
34	E34	CURRENT SPIKE	Board detected a high current condition. This indicates the potential for a short circuit.	● Current spike in supply ● Stop valve not completely open ● The compressor wire is lost phase ● Faulty control board ● Faulty compressor	● Check power supply for in-rush current during start-up or steady state operation ● Check the opening of stop valve, should be full open; Repair/replace if needed ● Check the wire between control board and compressor ● Replace control board if necessary ● Check the compressor; Repair/replace if needed

ClimateTalk Fault Code	PCB LED Display	Transmitted ClimateTalk Message	Thermostat Fault	Probable Causes	Corrective Actions
35	E35	HIGH CURRENT	Board detected a high current condition.	● Short circuit condition ● Stop valve not completely open ● Overcharge ● Faulty control board ● Faulty compressor	● Check installation clearances. ● Check the opening of stop valve, should be full open; Repair/replace if needed ● Check refrigerant charge level; Adjust if needed ● Replace control board if necessary ● Check the compressor; Repair/replace if needed.
36	E36	STARTUP ERROR	The control encountered an abnormal condition during the startup procedure.	● Blocked/restricted condenser coil and/or lines ● The compressor wire is lost phase ● Inconsistent compressor load ● Faulty control board	● Check and clean condenser coil and/or lines ● Check the wire between control board and compressor ● Replace control board if necessary
37	E37	OD CTRL FAIL4	Indicates the control board may need to be replaced.	● Faulty control board	● Replace control board if necessary
38	E38	COMP VOLTAGE	The control has detected a voltage related issue with the compressor.	● High or low voltage from supply ● The compressor wire is lost phase ● Faulty control board	● Correct low/high line voltage condition; Contact local utility if needed ● Check the wire between control board and compressor ● Replace control board if necessary
39	E39	OD CTRL FAIL5	Indicates the control board may need to be replaced.	● Thermistors inoperable or improperly connected ● Faulty control board	● Check the connection to thermistors; Repair/replace if needed ● Replace control board if necessary
40	E40	COMP MISMATCH	Control determines that its compressor requirement is different than the compressor capability.	● Bluetooth Shared Data Loader BTSDL01 not correct ● Control board mismatch	● Check Bluetooth Shared Data Loader BTSDL01 data vs. Heat Pump model ● Verify control board size vs. Heat Pump model; Replace control board if necessary
41	E41	LOW REFRIGERANT	The control has detected a low refrigerant condition.	● Refrigerant leak ● Low refrigerant charge ● Thermistors inoperable or not properly connected	● Test for system leaks using leak test procedure ● Check refrigerant charge level; Adjust if needed ● Checkthe connection to thermistor; Repair/replace if needed
42	E42	LOW LINE VOLT	Control detects a low power supply voltage condition.	● Low line voltage supply	● Check circuit breakers and fuses; Replace if needed ● Verify unit is connected to power supply as specified on rating plate ● Correct low line voltage condition; Contact local utility if needed
43	E43	HIGH LINE VOLT	Control detects a high power supply voltage condition.	● High line voltage supply	● Verify unit is connected to power supply as specified on rating plate ● Correct high line voltage condition; Contact local utility if needed
44	E44	OP TEMP RANGE	The control detects the outdoor temperature outside recommended operational range. Unit may continue to operate normally.	● Ambient air conditions too high or low	● Cycle power; re-try during usable ambient temperature range
45	E45	NO COOLING TEST	The control is unable to start the Cooling mode test because indoor heat has been turned on by thermostat. Please set thermostat to off position.	● Heat provided by secondary heating source	● Turn off heater using thermostat before running AHRI mode
47	E47	NO SYS VER TEST	The control is unable to start the System Verification test because indoor heat has been turned on by thermostat. Please set thermostat to off position.	● Heat provided by secondary heating source	● Turn off heater using thermostat before operation
48	E48	NO PUMP DOWN	The control is unable to enter the Pump Down Mode because indoor heat has been turned on by thermostat. Please set thermostat to off position.	● Heat provided by secondary heating source	● Turn off heater using thermostat before operation
49	E49	NO CHARGE MODE	The control is unable to enter Charging Mode because indoor heat has been turned on by thermostat. Please set thermostat to off position.	● Heat provided by secondary heating source	● Turn off heater using thermostat before operation
50	E50	LINE VOLT CTRL	This indicates there is a voltage issue on the control board. See service manual for troubleshooting information.	● High or low voltage from supply ● Faulty control board	● Correct low/high line voltage condition; Contact local utility if needed ● Replace control board if necessary
51	E51	OD COMM ERROR	This indicates potential communication issues have been detected by the outdoor control board.	● Communication wiring disconnected	● Check communication wiring; Repair as needed
52	-	COMP FAIL MINOR	This error indicates the equipment is experiencing frequent compressor faults. Control has determined continued operation is acceptable. This indicates they may be a problem with the equipment.	● Stop valve not completely open ● The compressor wire is lost phase ● Compressor motor failure	● Check the opening of stop valve, should be full open; Repair/replace if needed ● Check the wire between control board and compressor ● Inspect compressor motor for proper function; Replace if necessary

ClimateTalk Fault Code	PCB LED Display	Transmitted ClimateTalk Message	Thermostat Fault	Probable Causes	Corrective Actions
54	-	EEV MINOR	This error indicates the equipment is experiencing frequent low discharge superheat faults. Control has determined continued operation is acceptable. This indicates they may be a problem with the equipment.	• Thermistors inoperable or improperly connected • Faulty indoor EEV or indoor EEV coil • Faulty control board	• Check the connection to thermistors; Repair/replace if needed • Check indoor EEV; Replace if needed • Check indoor EEV coil; Replace if needed • Replace control board if necessary
55	-	HI DIS TEMP MIN	This error indicates the equipment is experiencing frequent high discharge temperature faults. Control has determined continued operation is acceptable. This indicates they may be a problem with the equipment.	• Discharge thermistor inoperable or improperly connected • Discharge thermistor is put on incorrect position or off • Low refrigerant charge • Overcharge • Faulty compressor	• Check discharge thermistor resistance and connections; Repair/replace as needed • Check discharge thermistor position • Check refrigerant charge level; Adjust if needed • Check refrigerant charge level; Adjust if needed • Check the compressor; Repair/replace if needed
56	E56	SUCT TEMP FAIL	The control has detected if the Outdoor Suction Temperature Sensor is out of range.	• Suction thermistor inoperable or not properly connected	• Check the connection to suction thermistor; Repair/replace if needed
57	-	CL LOOP SWEAT	This indicates the control is sensing sweating on the cooling loop.	• Refrigerant Leak • Low refrigerant charge • Faulty indoor EEV or indoor EEV coil • Thermistors inoperable or improperly connection	• Test for system leaks using leak test procedure • Check refrigerant charge level; Adjust if needed • Check indoor EEV; Replace if needed • Check indoor EEV coil; Replace if needed • Check the connection to thermistors; Repair/replace if needed
B0	Eb0	NO ID AIRFLOW	The estimated airflow from indoor subsystem is near to 0 CFM.	• Failed indoor blower motor • Indoor fan motor not properly connected • Too much static pressure	• Check ID fan motor wiring and connectors; Repair/replace if needed • Check ID fan motor; Replace if needed
B9	Eb9	LOW ID AIRFLOW	Estimated airflow from motor is lower than the airflow requirement.	• Failed indoor blower motor • Indoor fan motor not properly connected • Too much static pressure	• Check ID fan motor wiring and connectors; Repair/replace if needed • Check ID fan motor; Replace if needed
D0	Ed0	NO NET DATA	Control board does not have the necessary data for it to properly perform its functions.	• Heat Pump is wired as part of a communicating system and integrated control module does not contain any shared data.	• Replace control board if necessary
D1	Ed1	INVALID DATA	Control board does not the appropriate data needed to properly perform its functions.	• Heat Pump is wired as part of a communicating system and integrated control module contains invalid shared data or network data is invalid for the integrated control module.	• Replace control board if necessary
D2	Ed2	SYSTEM MISMATCH	The airflow requirement is greater than the airflow capability of the indoor subsystem.	• Heat Pump is wired as part of a communicating system and outdoor unit requires airflow greater than indoor unit's airflow capability • Shared data is incompatible the system or missing parameters • Communication wiring has loose connection. • Indoor unit without EEV.	• Verify shared data is correct for your specific model; Repopulate data if required • Check communication wiring. Repair as needed.
Items below are messages only displayed on the thermostat screen.					
11	E11	RUN SYS TEST	This test is required at startup. Installer should navigate to the ComforrtNet User Menu, choose Heat Pump, then EQUIP TEST and SYSYTEM TEST. Selecting ON will run the required test. Display will clear once testing is complete.	• Incomplete SYSTEM TEST • SYSTEM TEST is running	MESSAGE ONLY

TROUBLESHOOTING

NETWORK TROUBLESHOOTING

Communications is achieved by taking the difference between a positive dc signal and a negative dc signal. The positive dc signal is termed “data 1” or “1”. Data 1 is positive with respect to ground (or common). The negative dc signal is termed “data 2” or “2”. Data 2 is negative with respect to ground (or common).

Verify that the bus DS1 dip switches are in the ON position. Data 1 should be approximately 2.8 volt dc. Data 2 should be approximately 2.2 volt dc. The voltage difference between data 1 and data 2 should be approximately 0.6 volt dc.

If the voltage difference is not .6 VDC, turn OFF DS1 switches Data 1 and Data 2. Reset Power and check for .6 DCV.

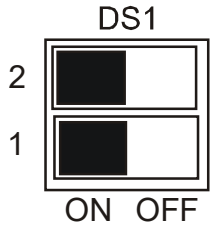

The ComfortNet™ system is a fully communicating system, constituting a network. Occasionally the need to troubleshoot the network may arise. The integrated control module has some on-board tools that can be used to troubleshoot the network. These tools are: red communications LED, green receive (Rx) LED, and the learn button.

- Red communications LED – Indicates the status of the network. The table below indicates the LED status and the corresponding potential problem.
- Green receive LED – Indicates network traffic. The table below indicates the LED status and the corresponding potential problem.
- LEARN button – Used to reset the network. Press the button for approximately 5 seconds to reset the network.

LED COLOR	LED Status	Indication	Probable Causes	Corrective Actions
Red Communications LED (H1P)	Off	Nominal condition	● None	● none
	1 Flash	Communications Failure	● Unknown packet is received	● Depress learn button
	2 Flash	Out-of-box reset	● Control power up ● Learn button depressed	● None
Green Receive LED (H2P)	Off	No power Communications error	● No power to Outdoor unit ● Open fuse ● Communication error	● Check circuit breakers and fuses; Replace if needed ●Reset network by depressing learn button ● Check communication wires (data 1/ data 2 wires); Replace if needed
	1 Steady Flash	No network found	● Broken/ disconnected communication wire(s) ● AC is installed as a legacy/ traditional system	● Check communication wires (data 1/ data 2 wires); Replace if needed ● Check installation type (legacy/ traditional or communicating) ● Check data 1/ data 2 voltages
	Rapid Flashing	Nominal network traffic	● Control is "talking" on network as expected	● none
	On Solid	Data 1/Data 2 miss-wire	● Data 1 and data 2 wires reversed at indoor unit, thermostat, or outdoor unit ● Short between data 1 and data 2 wires ● Short between data 1 or data 2 wires	● Check communication wires (data 1/ data 2 wires); Replace if needed ● Check data 1/ data 2 voltages

THERMISTOR RESISTANCE VALUE

		Tm : Coil Tl : Liquid Tb : Defrost Tgi: Indoor Gas Tli: Indoor Liquid		Tl : Liquid		Td : Discharge		Ta : Ambient	
TEMP	TEMP	Thermistor Resistance	Volts	Thermistor Resistance	Volts	Thermistor Resistance	Volts	Thermistor Resistance	Volts
(℃)	(F)	R（kΩ）	DC（V)	R（kΩ）	DC（V)	R（kΩ）	DC（V)	R（kΩ）	DC（V)
-30	-22	364.43	4.58	364.43	4.58	4759.15	4.96	362.48	4.58
-25	-13	267.00	4.45	267.00	4.45	3454.24	4.94	265.99	4.45
-20	-4	197.81	4.29	197.81	4.29	2533.62	4.92	197.31	4.28
-15	5	148.10	4.09	148.10	4.09	1877.01	4.90	147.86	4.09
-10	14	111.99	3.86	111.99	3.86	1403.82	4.86	111.88	3.86
-5	23	85.49	3.61	85.49	3.61	1059.45	4.82	85.43	3.61
0	32	65.84	3.33	65.84	3.33	806.47	4.77	65.80	3.33
5	41	51.09	3.04	51.09	3.04	618.95	4.70	51.10	3.04
10	50	39.96	2.74	39.96	2.74	478.76	4.62	39.99	2.74
15	59	31.50	2.44	31.50	2.44	373.11	4.53	31.54	2.44
20	68	25.01	2.16	25.01	2.16	292.86	4.41	25.06	2.16
25	77	20.00	1.89	20.00	1.89	231.44	4.28	20.04	1.89
30	86	16.10	1.64	16.10	1.64	184.11	4.13	16.13	1.64
35	95	13.04	1.42	13.04	1.42	147.37	3.95	13.07	1.42
40	104	10.63	1.22	10.63	1.22	118.68	3.76	10.65	1.22
45	113	8.71	1.04	8.71	1.04	96.13	3.56	8.73	1.05
50	122	7.18	0.89	7.18	0.89	78.29	3.34	7.18	0.89
55	131	5.95	0.76	5.95	0.76	64.10	3.11	-	-
60	140	4.96	0.65	4.96	0.65	52.76	2.87	-	-
65	149	4.16	0.56	4.16	0.56	43.63	2.64	-	-
70	158	3.50	0.48	3.50	0.48	36.26	2.41	-	-
75	167	2.96	0.41	2.96	0.41	30.27	2.18	-	-
80	176	2.51	0.35	2.51	0.35	25.38	1.97	-	-
85	185	2.14	0.30	2.14	0.30	21.37	1.77	-	-
90	194	1.83	0.26	1.83	0.26	18.06	1.58	-	-
95	203	1.58	0.23	1.58	0.23	15.33	1.41	-	-
100	212	1.36	0.20	1.36	0.20	13.06	1.25	-	-
105	221	1.18	0.17	1.18	0.17	11.17	1.11	-	-
110	230	1.02	0.15	1.02	0.15	9.59	0.99	-	-
115	239	0.89	0.13	0.89	0.13	8.25	0.87	-	-
120	248	0.78	0.12	0.78	0.12	7.13	0.77	-	-
125	257	0.68	0.10	0.68	0.10	6.18	0.68	-	-
130	266	0.60	0.09	0.60	0.09	5.37	0.61	-	-
135	275	0.53	0.08	0.53	0.08	4.69	0.54	-	-
140	284	0.47	0.07	0.47	0.07	4.10	0.48	-	-
145	293	0.42	0.06	0.42	0.06	3.59	0.42	-	-
150	302	0.37	0.06	0.37	0.06	3.16	0.37	-	-

R-410A Pressure vs. Temperature Chart

PSIG	°F	PSIG	°F	PSIG	°F	PSIG	°F	PSIG	°F	PSIG	°F
12	-37.7	114	37.8	216	74.3	318	100.2	420.0	120.7	522	137.6
14	-34.7	116	38.7	218	74.9	320	100.7	422.0	121.0	524	137.9
16	-32.0	118	39.5	220	75.5	322	101.1	424.0	121.4	526	138.3
18	-29.4	120	40.5	222	76.1	324	101.6	426.0	121.7	528	138.6
20	-36.9	122	41.3	224	76.7	326	102.0	428.0	122.1	530	138.9
22	-24.5	124	42.2	226	77.2	328	102.4	430.0	122.5	532	139.2
24	-22.2	126	43.0	228	77.8	330	102.9	432.0	122.8	534	139.5
26	-20.0	128	43.8	230	78.4	332	103.3	434.0	123.2	536	139.8
28	-17.9	130	44.7	232	78.9	334	103.7	436.0	123.5	538	140.1
30	-15.8	132	45.5	234	79.5	336	104.2	438.0	123.9	540	140.4
32	-13.8	134	46.3	236	80.0	338	104.6	440.0	124.2	544	141.0
34	-11.9	136	47.1	238	80.6	340	105.1	442.0	124.6	548	141.6
36	-10.1	138	47.9	240	81.1	342	105.4	444.0	124.9	552	142.1
38	-8.3	140	48.7	242	81.6	344	105.8	446.0	125.3	556	142.7
40	-6.5	142	49.5	244	82.2	346	106.3	448.0	125.6	560	143.3
42	-4.5	144	50.3	246	82.7	348	106.6	450.0	126.0	564	143.9
44	-3.2	146	51.1	248	83.3	350	107.1	452.0	126.3	568	144.5
46	-1.6	148	51.8	250	83.8	352	107.5	454.0	126.6	572	145.0
48	0.0	150	52.5	252	84.3	354	107.9	456.0	127.0	576	145.6
50	1.5	152	53.3	254	84.8	356	108.3	458.0	127.3	580	146.2
52	3.0	154	54.0	256	85.4	358	108.8	460.0	127.7	584	146.7
54	4.5	156	54.8	258	85.9	360	109.2	462.0	128.0	588	147.3
56	5.9	158	55.5	260	86.4	362	109.6	464.0	128.3	592	147.9
58	7.3	160	56.2	262	86.9	364	110.0	466.0	128.7	596	148.4
60	8.6	162	57.0	264	87.4	366	110.4	468.0	129.0	600	149.0
62	10.0	164	57.7	266	87.9	368	110.8	470.0	129.3	604	149.5
64	11.3	166	58.4	268	88.4	370	111.2	472.0	129.7	608	150.1
66	12.6	168	59.0	270	88.9	372	111.6	474.0	130.0	612	150.6
68	13.8	170	59.8	272	89.4	374	112.0	476.0	130.3	616	151.2
70	15.1	172	60.5	274	89.9	376	112.4	478.0	130.7	620	151.7
72	16.3	174	61.1	276	90.4	378	112.6	480.0	131.0	624	152.3
74	17.5	176	61.8	278	90.9	380	113.1	482.0	131.3	628	152.8
76	18.7	178	62.5	280	91.4	382	113.5	484.0	131.6	632	153.4
78	19.8	180	63.1	282	91.9	384	113.9	486.0	132.0	636	153.9
80	21.0	182	63.8	284	92.4	386	114.3	488.0	132.3	640	154.5
82	22.1	184	64.5	286	92.8	388	114.7	490.0	132.6	644	155.0
84	23.2	186	65.1	288	93.3	390	115.0	492.0	132.9	648	155.5
86	24.3	188	65.8	290	93.8	392	115.5	494.0	133.3	652	156.1
88	25.4	190	66.4	292	94.3	394	115.8	496.0	133.6	656	156.6
90	26.4	192	67.0	294	94.8	396	116.2	498.0	133.9	660	157.1
92	27.4	194	67.7	296	95.2	398	116.6	500.0	134.0	664	157.7
94	28.5	196	68.3	298	95.7	400	117.0	502.0	134.5	668	158.2
96	29.5	198	68.9	300	96.2	402	117.3	504.0	134.8	672	158.7
98	30.5	200	69.5	302	96.6	404	117.7	506.0	135.2	676	159.2
100	31.2	202	70.1	304	97.1	406	118.1	508.0	135.5	680	159.8
102	32.2	204	70.7	306	97.5	408	118.5	510.0	135.8	684	160.3
104	33.2	206	71.4	308	98.0	410	118.8	512.0	136.1	688	160.8
106	34.1	208	72.0	310	98.4	412	119.2	514.0	136.4	692	161.3
108	35.1	210	72.6	312	98.9	414	119.6	516.0	136.7	696	161.8
110	35.5	212	73.2	314	99.3	416	119.9	518.0	137.0		
112	36.9	214	73.8	316	99.7	418	120.3	520.0	137.3		

Required Liquid Line Temperature

LIQUID PRESSURE AT SERVICE VALVE (PSIG)	REQUIRED SUBCOOLING TEMPERATURE (°F)					
	8	10	12	14	16	18
189	58	56	54	52	50	48
195	60	58	56	54	52	50
202	62	60	58	56	54	52
208	64	62	60	58	56	54
215	66	64	62	60	58	56
222	68	66	64	62	60	58
229	70	68	66	64	62	60
236	72	70	68	66	64	62
243	74	72	70	68	66	64
251	76	74	72	70	68	66
259	78	76	74	72	70	68
266	80	78	76	74	72	70
274	82	80	78	76	74	72
283	84	82	80	78	76	74
291	86	84	82	80	78	76
299	88	86	84	82	80	78
308	90	88	86	84	82	80
317	92	90	88	86	84	82
326	94	92	90	88	86	84
335	96	94	92	90	88	86
345	98	96	94	92	90	88
354	100	98	96	94	92	90
364	102	100	98	96	94	92
374	104	102	100	98	96	94
384	106	104	102	100	98	96
395	108	106	104	102	100	98
406	110	108	106	104	102	100
416	112	110	108	106	104	102
427	114	112	110	108	106	104
439	116	114	112	110	108	106
450	118	116	114	112	110	108
462	120	118	116	114	112	110
474	122	120	118	116	114	112
486	124	122	120	118	116	114
499	126	124	122	120	118	116
511	128	126	124	122	120	118

TROUBLESHOOTING

WARNING

HIGH VOLTAGE
DISCONNECT ALL POWER BEFORE SERVICING OR INSTALLING THIS UNIT. MULTIPLE POWER SOURCES MAY BE PRESENT. FAILURE TO DO SO MAY CAUSE PROPERTY DAMAGE, PERSONAL INJURY OR DEATH.

CAUTION

WHEN REPLACING ELECTRICAL BOARD, DO NOT TOUCH THE HATCHED AREAS. BEFORE INSTALLING THE NEW ELECTRICAL BOARD, BE SURE TO WIPE THE GREASE OFF THE TUBING. EXERCISE CAUTION TO NOT DAMAGE THE ELECTRICAL CONNECTIONS. DISCONNECT AS NEEDED.

UNINSTALL THE ELECTRICAL BOARD

When uninstalling the main electrical board, remove the screws holding the cover in place. If board replacement is attempted without following proper uninstallation procedure, the refrigerant piping might be damaged. Always replace the grease with new grease on heat sink used for cooling. Not replacing grease may result in insufficient cooling and may damage the electrical board.

1. Remove the fixing screw A.
2. Lift the cover and open it in the direction shown in the figure.

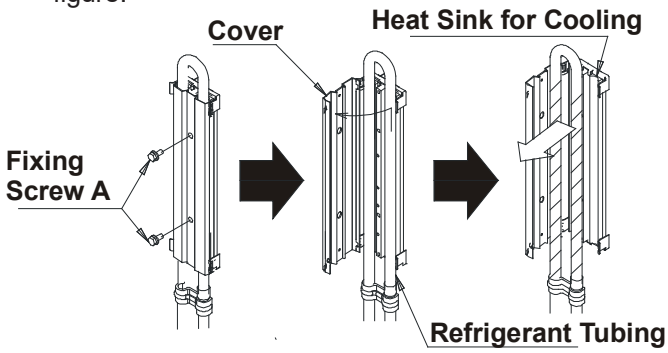

3. Remove fixing screws B affixing the sheet metal plate.
4. Carefully slide the sheet metal plate with the electrical board behind the refrigerant tubing as shown.

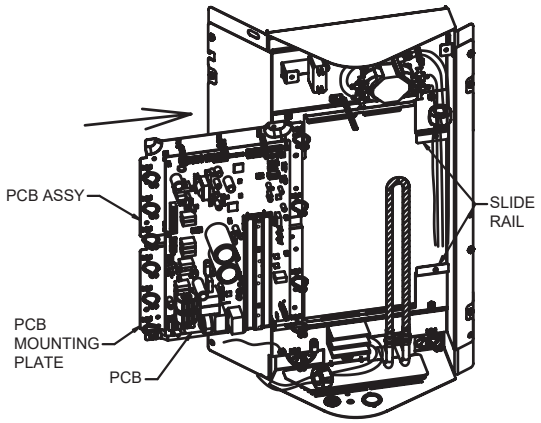

INSTALL THE ELECTRICAL BOARD

When working on a service port, ensure that no refrigerant and/or compressor oil is sprayed onto the electrical board. This could damage the board's functionality.

1. Wipe the stale grease completely from the installed piping. If you reinstall the control board, make sure to wipe clean the heat sink on the board. Coat the surface with the standard quantity of the specified new grease.
2. Carefully slide the sheet metal plate back in and fix the screws B.
3. Do not apply force to the parts on the control board. Hold the control board plate NOT the control board.
4. Ensure that the liquid tube does not come in contact with any part of the PCB assembly.
5. Gently fit the tube in the heat sink troughs. Ensure good contact.
6. Close the cover, slide it downwards, fix it with the nails (two nails) and tighten fixing screws A so that the piping is tightly connected.

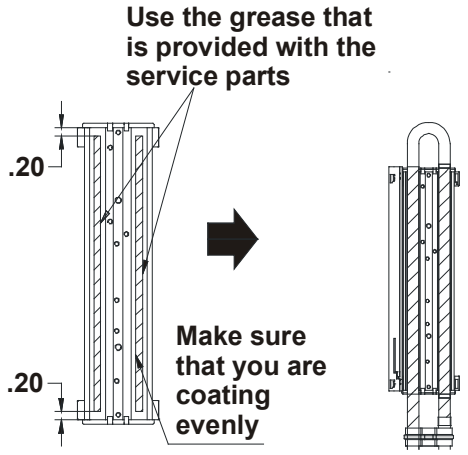

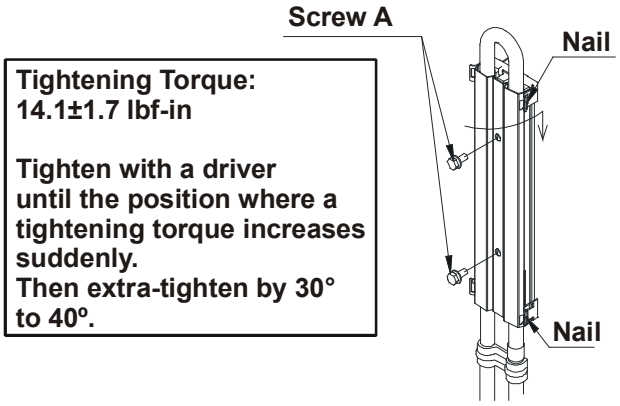

TROUBLESHOOTING

WARNING

AVOID CONTACT WITH THE CHARGED AREA.

- NEVER TOUCH THE CHARGED AREA BEFORE CONFIRMING THAT THE RESIDUAL VOLTAGE IS 50 VOLTS OR LESS.

1. SHUT DOWN THE POWER AND LEAVE THE CONTROL BOX FOR 10 MINUTES.
2. MAKE SURE TO TOUCH THE EARTH GROUND TERMINAL TO RELEASE THE STATIC ELECTRICITY FROM YOUR BODY (TO PREVENT FAILURE OF THE PC BOARD).
3. MEASURE THE RESIDUAL VOLTAGE IN THE SPECIFIED MEASUREMENT POSITION USING A VOM WHILE PAYING ATTENTION NOT TO TOUCH THE CHARGED AREA.
4. IMMEDIATELY AFTER MEASURING THE RESIDUAL VOLTAGE, DISCONNECT THE CONNECTORS OF THE OUTDOOR UNIT'S FAN MOTOR. (IF THE FAN BLADE ROTATES BY STRONG WIND BLOWING AGAINST IT, THE CAPACITOR WILL BE CHARGED, CAUSING THE DANGER OF ELECTRICAL SHOCK.)

2-3 TON

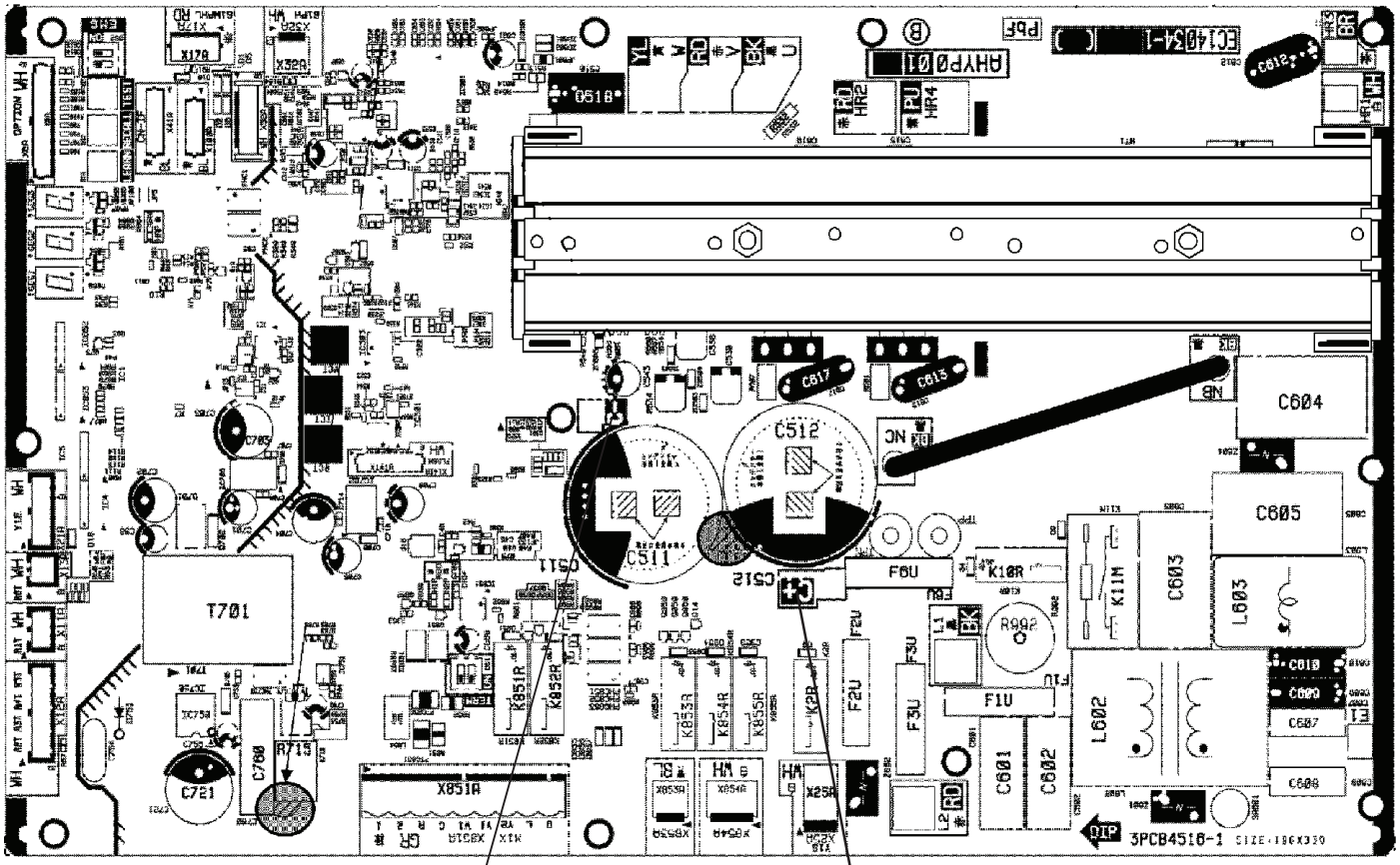

TROUBLESHOOTING

WARNING

AVOID CONTACT WITH THE CHARGED AREA.

- NEVER TOUCH THE CHARGED AREA BEFORE CONFIRMING THAT THE RESIDUAL VOLTAGE IS 50 VOLTS OR LESS.

1. SHUT DOWN THE POWER AND LEAVE THE CONTROL BOX FOR 10 MINUTES.
2. MAKE SURE TO TOUCH THE EARTH GROUND TERMINAL TO RELEASE THE STATIC ELECTRICITY FROM YOUR BODY (TO PREVENT FAILURE OF THE PC BOARD).
3. MEASURE THE RESIDUAL VOLTAGE IN THE SPECIFIED MEASUREMENT POSITION USING A VOM WHILE PAYING ATTENTION NOT TO TOUCH THE CHARGED AREA.
4. IMMEDIATELY AFTER MEASURING THE RESIDUAL VOLTAGE, DISCONNECT THE CONNECTORS OF THE OUTDOOR UNIT'S FAN MOTOR. (IF THE FAN BLADE ROTATES BY STRONG WIND BLOWING AGAINST IT, THE CAPACITOR WILL BE CHARGED, CAUSING THE DANGER OF ELECTRICAL SHOCK.)

4-5 TON

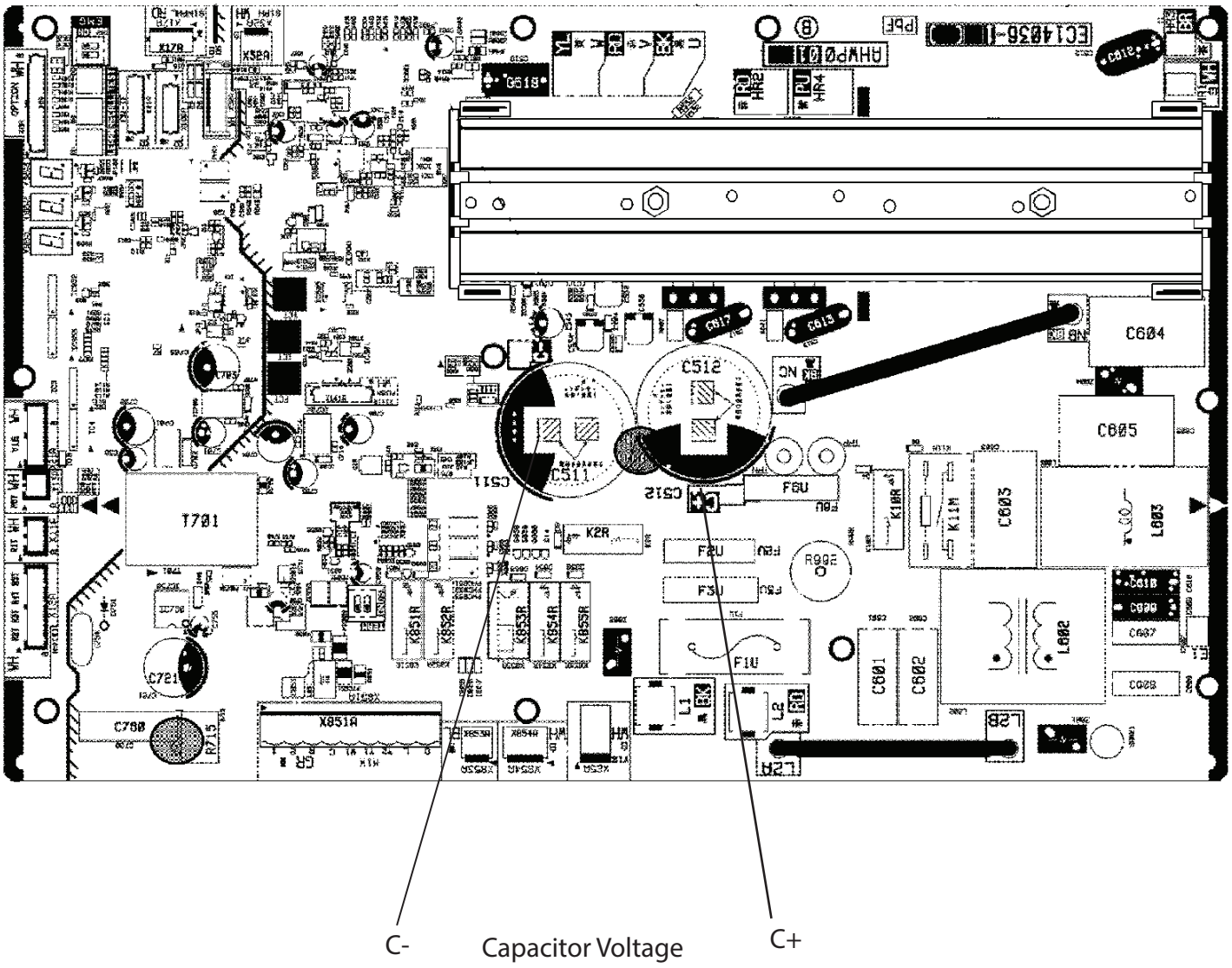

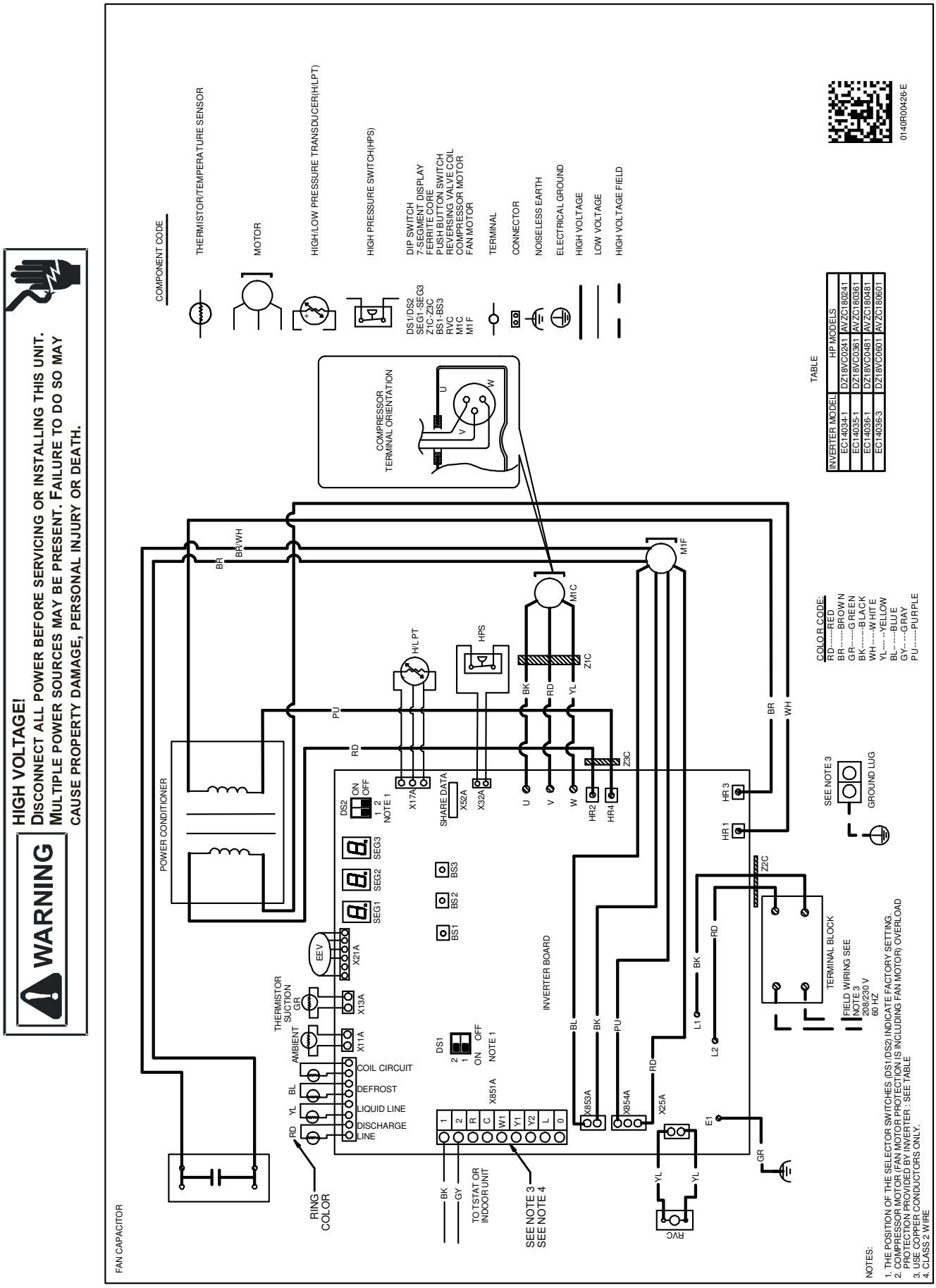

Wiring is subject to change. Always refer to wiring diagram on the unit for the most up to date wiring.

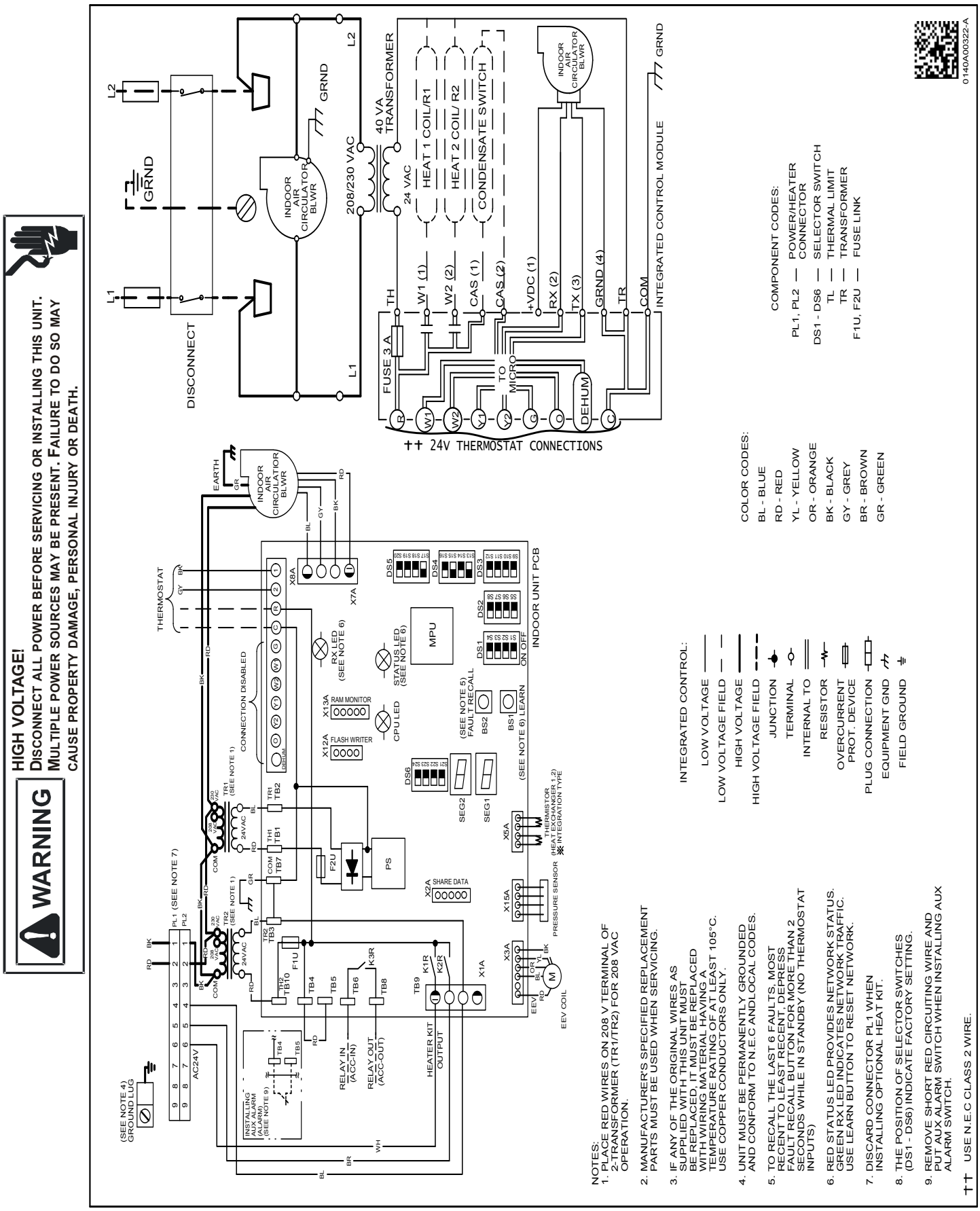

Wiring is subject to change. Always refer to wiring diagram on the unit for the most up to date wiring.

WIRING DIAGRAM

(AVPEC B* Revision)

WARNING

HIGH VOLTAGE!
DISCONNECT ALL POWER BEFORE SERVICING OR INSTALLING THIS UNIT. MULTIPLE POWER SOURCES MAY BE PRESENT. FAILURE TO DO SO MAY CAUSE PROPERTY DAMAGE, PERSONAL INJURY OR DEATH.

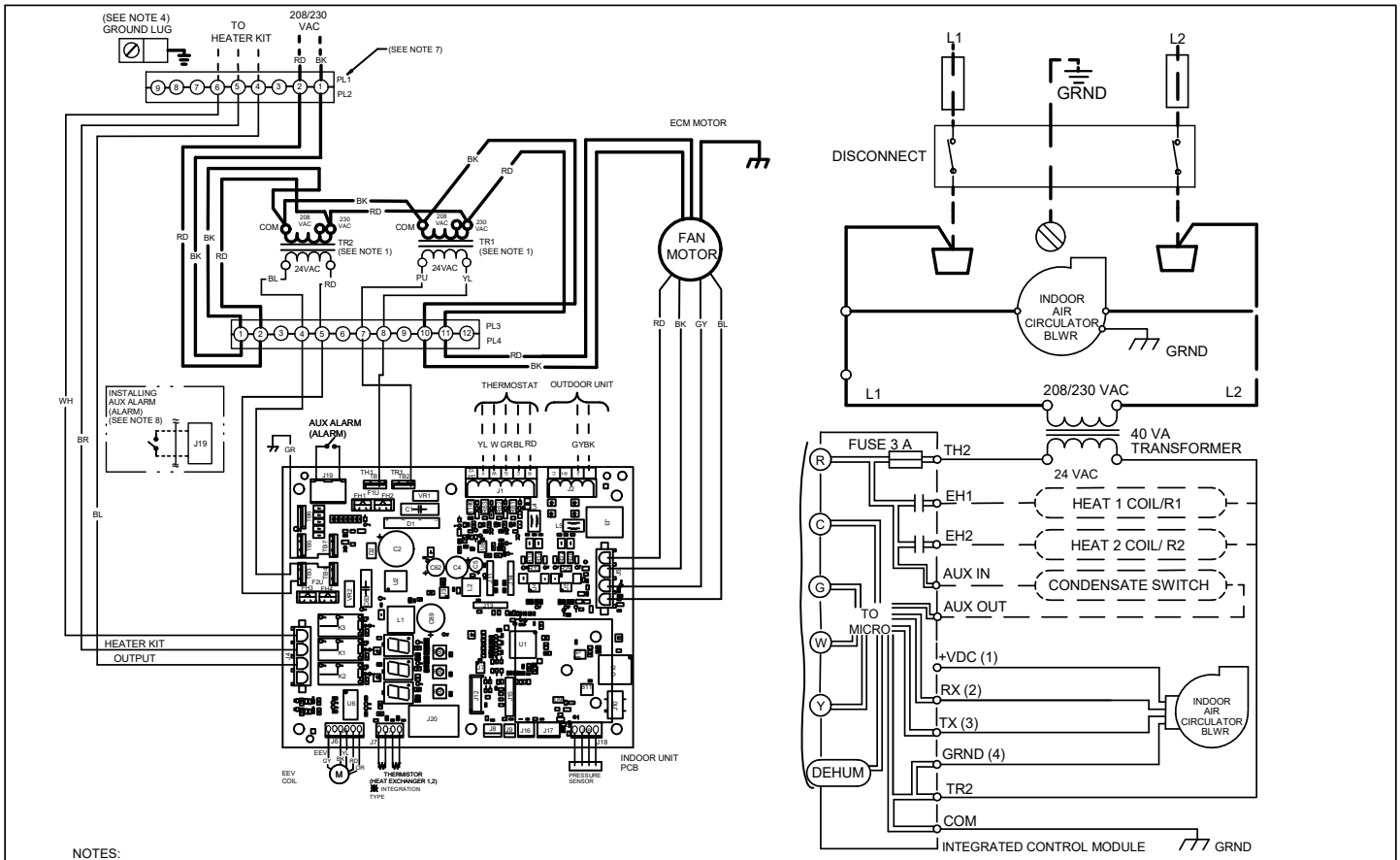

NOTES:
1. PLACE RED WIRES ON 208 V TERMINAL OF 2-TRANSFORMER (TR1/TR2) FOR 208 VAC OPERATION.
2. MANUFACTURER'S SPECIFIED REPLACEMENT PARTS MUST BE USED WHEN SERVICING.
3. IF ANY OF THE ORIGINAL WIRES AS SUPPLIED WITH THIS UNIT MUST BE REPLACED, IT MUST BE REPLACED WITH WIRING MATERIAL HAVING A TEMPERATURE RATING OF AT LEAST 105°C. USE COPPER CONDUCTORS ONLY.
4. UNIT MUST BE PERMANENTLY GROUNDED AND CONFORM TO N.E.C ANDLOCAL CODES.
5. TO RECALL THE LAST 6 FAULTS, MOST RECENT TO LEAST RECENT, DEPRESS FAULT RECALL BUTTON FOR MORE THAN 2 SECONDS WHILE IN STANDBY (NO THERMOSTAT INPUTS)
6. YELLOW STATUS LED PROVIDES NETWORK STATUS.GREEN RX LED INDICATES NETWORK TRAFFIC
7. DISCARD CONNECTOR PL1 WHEN INSTALLING OPTIONAL HEAT KIT.
8. REMOVE SHORTING PLATE FROM THE AUX SWITCH TERMINAL WHEN INSTALLING AUX ALARM SWITCH.
9. USE N.E.C CLASS 2 WIRE.

INTEGRATED CONTROL:

- LOW VOLTAGE
- LOW VOLTAGE FIELD
- HIGH VOLTAGE
- HIGH VOLTAGE FIELD
- JUNCTION
- TERMINAL
- INTERNAL TO
- RESISTOR
- OVERCURRENT PROT. DEVICE
- PLUG CONNECTION
- EQUIPMENT GND
- FIELD GROUND

COLOR CODES:

- BL - BLUE
- RD - RED
- YL - YELLOW
- OR - ORANGE
- BK - BLACK
- GY - GREY
- BR - BROWN
- GR - GREEN
- PU - PURPLE
- WH - WHITE

COMPONENT CODES:

- PL1, PL2 — POWER/HEATER CONNECTOR
- TL — THERMAL LIMIT
- TR — TRANSFORMER
- F1U, F2U — FUSE LINK
- PL3, PL4 — TRANSFORMER CONNECTOR

0140A00723-C

Wiring is subject to change. Always refer to wiring diagram on the unit for the most up to date wiring.

ACCESSORIES
AV**PEC

HEATER KIT

MODELS	HKSX03XC	HKSX05XC	HKSX06XC	HKSX08XC	HKSX10XC	HKSC05XC	HKSC08XC	HKSC10XC	HKSC15XA	HKSC15XB	HKSC15XF	HKSC19CA	HKSC19CB	HKSC20DA	HKSC20DB	HKSC20XF	HKSC25DC
AVPEC25B14A*	X	X	X	X	X	X	X	X									
AVPEC37C14A*		X	X	X	X	X	X	X	X	X	X	X	X				
AVPEC59D14A*		X	X	X	X	X	X	X	X	X	X			X	X	X	
AVPEC61D14A*		X	X	X	X	X	X	X	X	X	X			X	X	X	X

***Revision level that may or may not be designated.**
NOTE: Airflow selection should meet the minimum requirements as mentioned in the air handler Installation instructions.

For heater kit installation, it is important to set the capacity of the electric heater at Set-up menu on the thermostat and DIP switch on indoor unit control board. For more information, please see indoor unit I/O manual.

VALID SWITCH SETTINGS								
Heater Kit	Heater kW				Dip Switch Setting Indoor PCB DS Bank 3			
Selection	AVPEC25B14A*	AVPEC37C14A* +	AVPEC59D14A* ++	AVPEC61D14A*	S-9	S-10	S-11	S-12
No heater	-	-	-	-	OFF	OFF	OFF	OFF
First	3	5	5	5	ON	ON	ON	ON
Second	5	6	6	6	ON	ON	ON	OFF
Third	6	8	8	8	ON	ON	OFF	ON
Fourth	8	10	10	10	ON	ON	OFF	OFF
Fifth	10	15	15	15	ON	OFF	ON	ON
Sixth	X	19	20	20	ON	OFF	ON	OFF
Seventh	X	X	X	25	ON	OFF	OFF	ON

+For match up with a 2 ton outdoor unit: Heater kit application shall not exceed 10 kW.

++For match up with a 3 ton outdoor unit: Heater kit application shall not exceed 15 kW.

NOTE: For emergency mode heating, set the dipswitch on PCB. For heating mode, use the thermostta user menu.

ACCESSORIES

CHECKING HEATER LIMIT CONTROL(S) (OPTIONAL ELECTRIC HEATERS)

Each individual heater element is protected with an automatic rest limit control connected in series with each element to prevent overheating of components in case of low airflow. This limit control will open its circuit at approximately 150°F. to 160°F and close at approximately 110°F.

WARNING

DISCONNECT POWER SUPPLY BEFORE SERVICING.

1. Remove the wiring from the control terminals.
2. Using an ohmmeter test for continuity across the normally closed contacts. No reading indicates the control is open - replace if necessary. Make sure the limits are cool before testing.

IF FOUND OPEN - REPLACE - DO NOT WIRE AROUND.

CHECKING HEATER ELEMENTS

Optional electric heaters may be added, in the quantities shown in the spec sheet for each model unit, to provide electric resistance heating. Under no condition shall more heaters than the quantity shown be installed.

WARNING

HIGH VOLTAGE
DISCONNECT ALL POWER BEFORE SERVICING OR INSTALLING THIS UNIT. MULTIPLE POWER SOURCES MAY BE PRESENT. FAILURE TO DO SO MAY CAUSE PROPERTY DAMAGE, PERSONAL INJURY OR DEATH.

1. Disassemble and remove the heating element(s).
2. Visually inspect the heater assembly for any breaks in the wire or broken insulators.
3. Using an ohmmeter, test the element for continuity - no reading indicates the element is open. Replace as necessary.

ELECTRIC HEATER (OPTIONAL ITEM)

Optional electric heaters may be added, in the quantities shown in the specifications section, to provide electric resistance heating. Under no condition shall more heaters than the quantity shown be installed.

The low voltage circuit in the air handler is factory wired and terminates at the location provided for the electric heater(s). A minimum of field wiring is required to complete the installation.

Other components such as a Heating / Cooling Thermostat and Outdoor Thermostats are available to complete the installation.

The system CFM can be determined by measuring the static pressure external to the unit. The installation manual supplied with the blower coil, or the blower performance table in the service manual, shows the CFM for the static measured.

Alternately, the system CFM can be determined by operating the electric heaters and indoor blower WITHOUT having the compressor in operation. Measure the temperature rise as close to the blower inlet and outlet as possible.

If other than a 240V power supply is used, refer to the BTUH CAPACITY CORRECTION FACTOR in the following chart.

BTUH CAPACITY CORRECTION FACTOR				
SUPPLY VOLTAGE	250	230	220	208
MULTIPLICATION FACTOR	1.08	.92	.84	.75

EXAMPLE: Five (5) heaters provide 24.0 KW at the rated 240V. Our actual measured voltage is 220V, and our measured temperature rise is 42°F. Find the actual CFM:

Answer: 24.0KW, 42°F Rise, 240 V = 1800 CFM from the **TEMPERATURE RISE** chart on the right.

Heating output at 220 V = 24.0KW x 3.413 x .84 = 68.8 MBH.

Actual CFM = 1800 x .84 Corr. Factor = 1400 CFM.

NOTE: The temperature rise table is for sea level installations. The temperature rise at a particular KW and CFM will be greater at high altitudes, while the external static pressure at a particular CFM will be less.

CFM	HEAT KIT NOMINAL kW							
	3	5	6	8	10	15	19/20	25
800	12	19	23	31	37			
1000	9	15	19	25	30	44		
1200	8	12	15	21	25	37	49	62
1400	7	11	13	18	21	32	42	53
1600	6	9	12	15	19	28	37	46
1800	5	8	10	14	16	25	33	41
2000	5	7	9	12	15	22	30	37

230/1/60 SUPPLY VOLTAGE - TEMP. RISE °F

CFM	HEAT KIT NOMINAL kW							
	3	5	6	8	10	15	19/20	25
800	11	18	22	30	35			
1000	9	14	18	24	28	42		
1200	7	12	15	20	24	35	47	59
1400	6	10	13	17	20	30	40	51
1600	6	9	11	15	18	27	35	44
1800	5	8	10	13	16	24	31	39
2000	4	7	9	12	14	21	28	35

220/1/60 SUPPLY VOLTAGE - TEMP. RISE °F

ACCESSORIES

CFM	HEAT KIT NOMINAL kW							
	3	5	6	8	10	15	19/20	25
800	10	17	21	28	33			
1000	8	13	17	22	27	40		
1200	7	11	14	19	22	33	45	56
1400	6	10	12	16	19	29	38	48
1600	5	8	10	14	17	25	33	42
1800	5	7	9	12	15	22	30	37
2000	4	7	8	11	13	20	27	33

208/1/60 SUPPLY VOLTAGE - TEMP. RISE °F

Model	HEATER (kW)								
	3	5	6	8	10	15	19	20	25
AVPEC25B14*	550	650	700	715	875				
AVPEC37C14*		850	900	1000	1120	1220	1250		
AVPEC59D14*		990	1110	1200	1240	1520		1520	
AVPEC61D14*		1030	1150	1250	1320	1650		1690	1715

MINIMUM CFM REQUIRED FOR HEATER KITS

ELECTRIC HEATER CAPACITY BTUH								
HTR KW	3.0 KW	4.7 KW	6.0 KW	7.0 KW	9.5 KW	14.2 KW	19.5 KW	21.0 KW
BTUH	10200	16200	20400	23800	32400	48600	66500	71600

FORMULAS:

Heating Output = KW x 3.413 x Corr. Factor

Actual CFM = CFM (from table) x Corr. Factor

BTUH = KW x 3.413

BTUH = CFM x 1.08 x Temperature Rise (T)

$$CFM = \frac{KW \times 3.413}{1.08 \times T}$$

$$T = \frac{BTUH}{CFM \times 1.08}$$

CHECKING HEATER FUSE LINK (OPTIONAL ELECTRIC HEATERS)

Each individual heater element is protected with a one time fuse link which is connected in series with the element. The fuse link will open at approximately 333°.

WARNING

DISCONNECT POWER SUPPLY BEFORE SERVICING.

4. Remove heater element assembly so as to expose fuse link.
5. Using an ohmmeter, test across the fuse link for continuity - no reading indicates the link is open. Replace as necessary.

NOTE: The link is designed to open at approximately 333°F. DO NOT WIRE AROUND - determine reason for failure.

CUSTOMER FEEDBACK
We are very interested in all product comments.
Please fill out the feedback form on one of the following links:
Goodman® Brand Products: (http://www.goodmanmfg.com/about/contact-us).
Amana® Brand Products: (http://www.amana-hac.com/about-us/contact-us).
You can also scan the QR code on the right for the product brand you purchased to be directed to the feedback page.

GOODMAN® BRAND

AMANA® BRAND

Amana is a registered trademark of Maytag Corporation or its related companies and is used under license.
All rights reserved.

Copyright © 2021 Goodman Manufacturing Company, L.P.