Service and Troubleshooting

ALXS3, ALXS4, ALXS5, GLXS3, GLXS4, GLXS5, VLXS3, VLXS4 Condensing Units. ALZS4, ALZS5, GLZS4, GLZS5, VLZS4 Heat Pumps With Refrigerant Blowers, Coils, & Accessories

Pride and workmanship go into every product to provide our customers with quality products. It is possible, however, that during its lifetime a product may require service. Products should be serviced only by a qualified service technician who is familiar with the safety procedures required in the repair and who is equipped with the proper tools, parts, testing instruments and the appropriate service manual. **REVIEW ALL SERVICE INFORMATION IN THE APPROPRIATE SERVICE MANUAL BEFORE BEGINNING REPAIRS.**

WARNING

ONLY PERSONNEL THAT HAVE BEEN TRAINED TO INSTALL, ADJUST, SERVICE, MAINTENANCE OR REPAIR (HEREINAFTER, "SERVICE") THE EQUIPMENT SPECIFIED IN THIS MANUAL SHOULD SERVICE THE EQUIPMENT.

THIS EQUIPMENT IS NOT INTENDED FOR USE BY PERSONS (INCLUDING CHILDREN) WITH REDUCED PHYSICAL, SENSORY OR MENTAL CAPABILITIES, OR LACK OF EXPERIENCE AND KNOWLEDGE, UNLESS THEY HAVE BEEN GIVEN SUPERVISION OR INSTRUCTION CONCERNING USE OF THE APPLIANCE BY A PERSON RESPONSIBLE FOR THEIR SAFETY.

CHILDREN SHOULD BE SUPERVISED TO ENSURE THAT THEY DO NOT PLAY WITH THE EQUIPMENT.

THE MANUFACTURER WILL NOT BE RESPONSIBLE FOR ANY INJURY OR PROPERTY DAMAGE ARISING FROM IMPROPER SUPERVISION, SERVICE OR SERVICE PROCEDURES. IF YOU SERVICE THIS UNIT, YOU ASSUME RESPONSIBILITY FOR ANY INJURY OR PROPERTY DAMAGE WHICH MAY RESULT. IN ADDITION, IN JURISDICTIONS THAT REQUIRE ONE OR MORE LICENSES TO SERVICE THE EQUIPMENT SPECIFIED IN THIS MANUAL, ONLY LICENSED PERSONNEL SHOULD SERVICE THE EQUIPMENT. IMPROPER SUPERVISION, INSTALLATION, ADJUSTMENT, SERVICING, MAINTENANCE OR REPAIR OF THE EQUIPMENT SPECIFIED IN THIS MANUAL, OR ATTEMPTING TO INSTALL, ADJUST, SERVICE OR REPAIR THE EQUIPMENT SPECIFIED IN THIS MANUAL WITHOUT PROPER SUPERVISION OR TRAINING MAY RESULT IN PRODUCT DAMAGE, PROPERTY DAMAGE, PERSONAL INJURY OR DEATH.

WARNING

DO NOT BYPASS SAFETY DEVICES.

WARNING

ALL MAINTENANCE STAFF AND OTHERS WORKING IN THE LOCAL AREA SHALL BE INSTRUCTED ON THE NATURE OF WORK BEING CARRIED OUT. WORK IN CONFINED SPACES SHALL BE AVOIDED.

WARNING

NO PERSON CARRYING OUT WORK IN RELATION TO A REFRIGERATING SYSTEM WHICH INVOLVES EXPOSING ANY PIPE WORK SHALL USE ANY SOURCES OF IGNITION IN SUCH A MANNER THAT IT MAY LEAD TO THE RISK OF FIRE OR EXPLOSION. ALL POSSIBLE IGNITION SOURCES, INCLUDING CIGARETTE SMOKING, SHOULD BE KEPT SUFFICIENTLY FAR AWAY FROM THE SITE OF INSTALLATION, REPAIRING, REMOVING AND DISPOSAL, DURING WHICH REFRIGERANT CAN POSSIBLY BE RELEASED TO THE SURROUNDING SPACE. PRIOR TO WORK TAKING PLACE, THE AREA AROUND THE EQUIPMENT IS TO BE SURVEYED TO MAKE SURE THAT THERE ARE NO FLAMMABLE HAZARDS OR IGNITION RISKS. "NO SMOKING" SIGNS SHALL BE DISPLAYED.

RS6200301r5
August 2026

©2026 Daikin Comfort Technologies Manufacturing, Inc.

AMANA® HEATING & AIR CONDITIONING® / TM 2026 Amana. Manufactured under license by Daikin. Limited warranty provided by the manufacturer.
All trademarks are the property of their respective owners.

IMPORTANT INFORMATION

TABLE OF CONTENTS

IMPORTANT INFORMATION 2
PRODUCT IDENTIFICATION 5
PRODUCT DESIGN 11
SYSTEM OPERATION 14
SERVICING 17
- CHECKING VOLTAGE 17
- CHECKING WIRING 17
- CHECKING THERMOSTAT AND WIRING 17
- INDOOR BLOWER MOTOR 17
- RESISTANCE HEATERS 18
- CHECKING TRANSFORMER AND CONTROL CIRCUIT 18
- CHECKING CONTRACTOR AND/OR RELAYS 18
- CHECKING CONTACTOR CONTACTS 18
- CHECKING FAN RELAY CONTACTS 19
- CHECKING HIGH PRESSURE CONTROL 19
- CHECKING LOW PRESSURE CONTROL 19
- COPELAND CORESENSE™ DIAGNOSTICS - 3-WIRE MODULE 20
- CHECKING CAPACITOR 25
- RESISTANCE CHECK USING A DIGITAL MULTI-METER 25
- CHECK FOR ANALOG METER 25
- CAPACITANCE CHECK USING A DIGITAL MULTI-METER (IN CAPACITANCE MODE) 25
- CAPACITOR, START 25
- TESTING A RUN CAPACITOR UNDER LOAD 26
- REFRIGERANT DETECTION SYSTEM (RDS) 26
- CHECKING HIGH EFFICIENCY MOTORS 30
- EEM BLOWER REPLACEMENT 31
- CHECKING COMPRESSOR 32
- RESISTANCE TEST 32
- GROUND TEST 33
- UNLOADER TEST PROCEDURE 33
- OPERATION TEST 34
- TESTING CRANKCASE HEATER 34
- CHECKING REVERSING VALVE AND SOLENOID 34
- TROUBLESHOOTING THE REVERSING VALVE FOR ELECTRICAL FAILURE 35
- TROUBLESHOOTING MECHANICAL FAILURES ON A REVERSING VALVE BY PRESSURE 35
- TROUBLESHOOTING MECHANICAL FAILURES ON A REVERSING VALVE BY TEMPERATURE 35
- TESTING DEFROST CONTROL 35
- TESTING DEFROST THERMOSTAT 35
- CHECKING HEATER ELEMENTS 36
- CHECKING HEATER LIMIT CONTROL(S) 37
- CHECKING HEATER FUSE LINK 37
- REFRIGERATION REPAIR PRACTICE 37
- BRAZING MATERIALS 37
- STANDING PRESSURE TEST (RECOMMENDED BEFORE SYSTEM EVACUATION 38
- SYSTEM EVACUATION 38
- DEEP VACUUM METHOD 38
- TRIPLE EVACUATION METHOD 39
- CHARGING 39
- FINAL CHARGE ADJUSTMENT 40
- FIXED ORIFICES 41
- EXPANSION VALVE SYSTEM 41
- SUPERHEAT ADJUSTMENT 43
- HEAT PUMP - HEATING CYCLE 43
- CHECKING COMPRESSOR EFFICIENCY 44
- CHECKING RESTRICTED LIQUID LINE 44
- OVERCHARGE OF REFRIGERANT 44
- NON-CONDENSABLES 45
- COMPRESSOR BURNOUT 45
- SUCTION LINE DRIER CLEAN-UP METHOD 45
- REFRIGERANT PIPING 46
- DUCT STATIC PRESSURES 47
- PERIODIC MAINTENANCE 47
- CLEANING ALUMINUM COILS 47
- SYSTEM SERVICE AND DECOMMISSIONING 48
- LABELING OF EQUIPMENT 48

TROUBLESHOOTING 49
WIRING DIAGRAMS 56

IMPORTANT INFORMATION

IMPORTANT NOTICES

RECOGNIZE SAFETY SYMBOLS, WORDS AND LABELS

WARNING

To prevent the risk of property damage, personal injury, of death, do not store combustible materials or use gasoline or other flammable liquids or vapors in the vicinity of this appliance.

WARNING

HIGH VOLTAGE
Disconnect ALL power before servicing or installing this unit. Multiple power sources may be present. Failure to do so may cause property damage, personal injury or death.

WARNING

This unit should not be connected to, or used in conjunction with, any devices that are not listed in the applicable product specifications as acceptable for use with this unit or have not been tested and approved by the manufacturer. Serious property damage or personal injury, reduced unit performance and/or hazardous conditions may result from the use of devices that have not been approved or listed in the applicable product specifications as acceptable by the manufacturer.

SAFE REFRIGERANT HANDLING

While these items will not cover every conceivable situation, they should serve as a useful guide.

WARNING

Refrigerants are heavier than air. They can "push out" the oxygen in your lungs or in any enclosed space. To avoid possible difficulty in breathing or death:

- Never purge refrigerant into an enclosed room or space. By law, all refrigerant must be reclaimed.
- If an indoor leak is suspected, thoroughly ventilate the area before beginning work.
- Liquid refrigerant can be very cold. To avoid possible frostbite or blindness, avoid contact with refrigerant and wear gloves and goggles. If liquid refrigerant does contact your skin or eyes, seek medical help immediately.
- Always follow EPA regulations. Never burn refrigerant, as poisonous gas will be produced.

WARNING

To avoid possible injury, explosion or death, practice safe handling of refrigerants.

WARNING

The compressor POE oil for R-32 units is extremely susceptible to moisture absorption and could cause compressor failure. Do not leave system open to atmosphere any longer than necessary for installation.

WARNING

To avoid possible explosion:

- Never apply flame or steam to a refrigerant cylinder. If you must heat a cylinder for faster charging, partially immerse it in warm water.
- Never fill a cylinder more than 80% full of liquid refrigerant.
- Never add anything other than R-32 to an R-32 cylinder or R-410A to an R-410A cylinder. The service equipment used must be listed or certified for the type of refrigerant used.
- Store cylinders in a cool, dry place. Never use a cylinder as a platform or a roller.

WARNING

To avoid possible explosion, use only returnable (not disposable) service cylinders when removing refrigerant from a system.

- Ensure the cylinder is free of damage which could lead to a leak or explosion.
- Ensure the hydrostatic test date does not exceed 5 years.

Ensure the pressure rating meets or exceeds 400 lbs.
When in doubt, do not use cylinder.

The manual contains specific information for service personnel

Checks to the area
Prior to beginning work on systems containing FLAMMABLE REFRIGERANTS, safety checks are necessary to ensure that the risk of ignition is minimized. For repair to the REFRIGERATING SYSTEM the following procedures must be completed prior to conducting work on the system.

Work procedure
Work shall be undertaken under a controlled procedure so as to minimize the risk of a flammable gas or vapor being present while the work is being performed.

General work area
All maintenance staff and others working in the local area shall be instructed on the nature of work being carried out. Work in confined spaces shall be avoided.

Checking for presence of refrigerant
The area shall be checked with an appropriate refrigerant detector prior to and during work, to ensure the technician is aware of potentially toxic or flammable atmospheres. Ensure that the leak detection equipment being used is suitable for use with all applicable refrigerants, i.e. non-sparking, adequately sealed or intrinsically safe.

Presence of fire extinguisher
If any hot work is to be conducted on the refrigerating equipment or any associated parts, appropriate fire extinguishing equipment shall be available to hand. Have a dry powder or CO2 fire extinguisher adjacent to the hot work area.

No ignition sources
No person carrying out work in relation to a REFRIGERATING SYSTEM which involves exposing any pipe work shall use any sources of ignition in such a manner that it may lead to the risk of fire or explosion. All possible ignition sources, including cigarette smoking, should be kept sufficiently far away from the site of installation, repairing, removing and disposal, during which refrigerant can possibly be released to the surrounding space. Prior to work taking place, the area around the equipment is to be surveyed to make sure that there are no flammable hazards or ignition risks. “No Smoking” signs shall be displayed.

Checks to the refrigerating equipment
Where electrical components are being changed, they shall be fit for the purpose and to the correct specification. At all times the manufacturer’s maintenance and service guidelines shall be followed. If in doubt, consult the manufacturer’s technical department for assistance. When replacing electrical components “intrinsically safe components” must be used as replacements.

The following checks shall be applied to installations using FLAMMABLE REFRIGERANTS:

- the actual REFRIGERANT CHARGE is in accordance with the room size within which the refrigerant containing parts are installed;
- the ventilation machinery and outlets are operating adequately and are not obstructed;
- if an indirect refrigerating circuit is being used, the secondary circuit shall be checked for the presence of refrigerant;
- marking to the equipment continues to be visible and legible. Markings and signs that are illegible shall be corrected;
- refrigerating pipe or components are installed in a position where they are unlikely to be exposed to any substance which may corrode refrigerant containing components, unless the components are constructed of materials which are inherently resistant to being corroded or are suitably protected against being so corroded.

Checks to electrical devices
Repair and maintenance to electrical components shall include initial safety checks and component inspection procedures. If a fault exists that could compromise safety, then no electrical supply shall be connected to the circuit until it is satisfactorily dealt with. If the fault cannot be corrected immediately but it is necessary to continue operation, an adequate temporary solution shall be used. This shall be reported to the owner of the equipment so all parties are advised.

Initial safety checks shall include:
- that capacitors are discharged: this shall be done in a safe manner to avoid possibility of sparking;
- that no live electrical components and wiring are exposed while charging, recovering or purging the system;
- that there is continuity of earth bonding.

PRODUCT IDENTIFICATION NOMENCLATURE

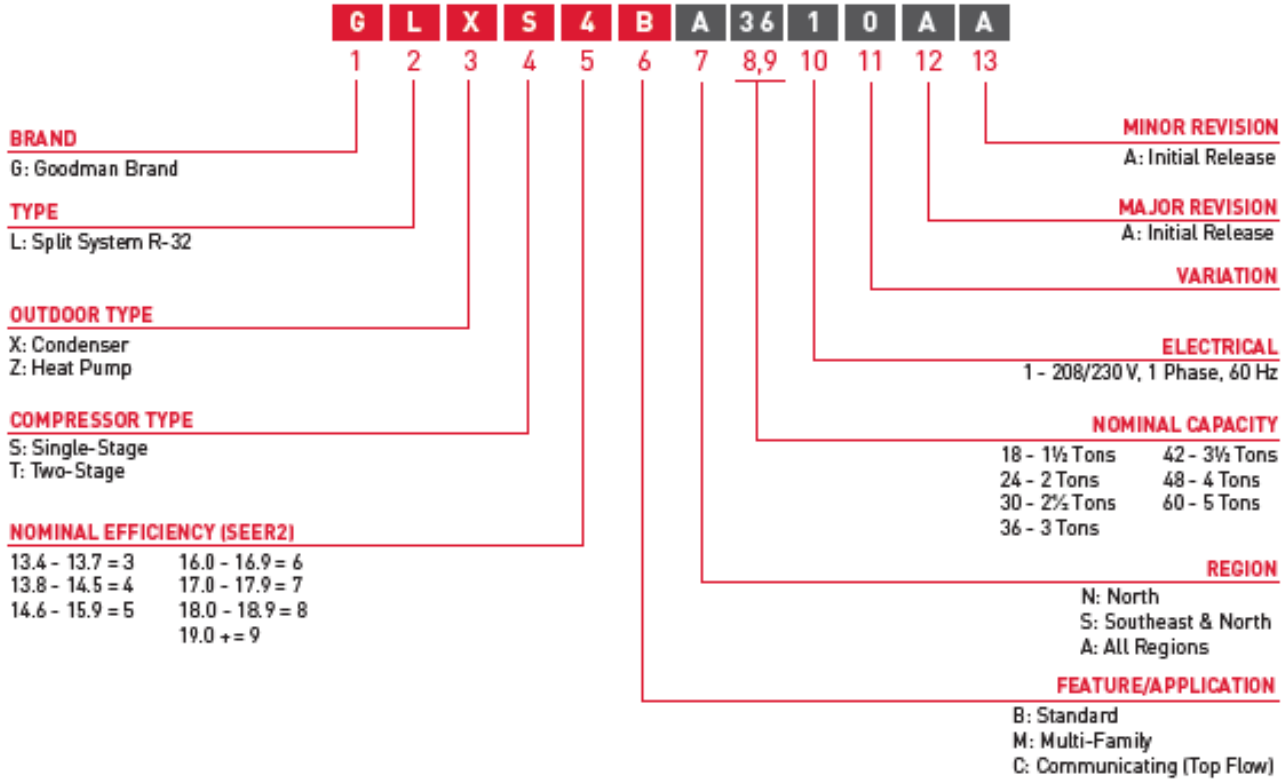

PRODUCT IDENTIFICATION NOMENCLATURE

V	L	X	S	3	B	N	36	1	0	A	A
1	2	3	4	5	6	7	8,9	10	11	12	13

Brand

V GMC

Type

L R-32 Splits System

Outdoor Type

X Condenser

Z Heat Pump

Compressor Type

S Single-Stage
T Two-Stage

Efficiency (SEER2) Nominal

13.4 - 13.7 = 3
13.8 - 14.5 = 4
14.6 - 15.9 = 5
16.0-16.9 = 6
17.0-17.9 = 7
18.0-18.9 = 8
19.0+ = 9

Region

N North
S Southeast & North
A All Regions

Feature/Application

B - Standard
M - Multi-Family
C - Communicating (Top Flow)

Nominal Capacity

18 - 1½ Tons
24 - 2 Tons
30 - 2½ Tons
36 - 3 Tons
42 - 3½ Tons
48 - 4 Tons
60 - 5 Tons

Electrical

1 208/230 V, 1 Phase, 60 Hz

Variation

Major Revision

A

Minor Rev

A

PRODUCT IDENTIFICATION NOMENCLATURE

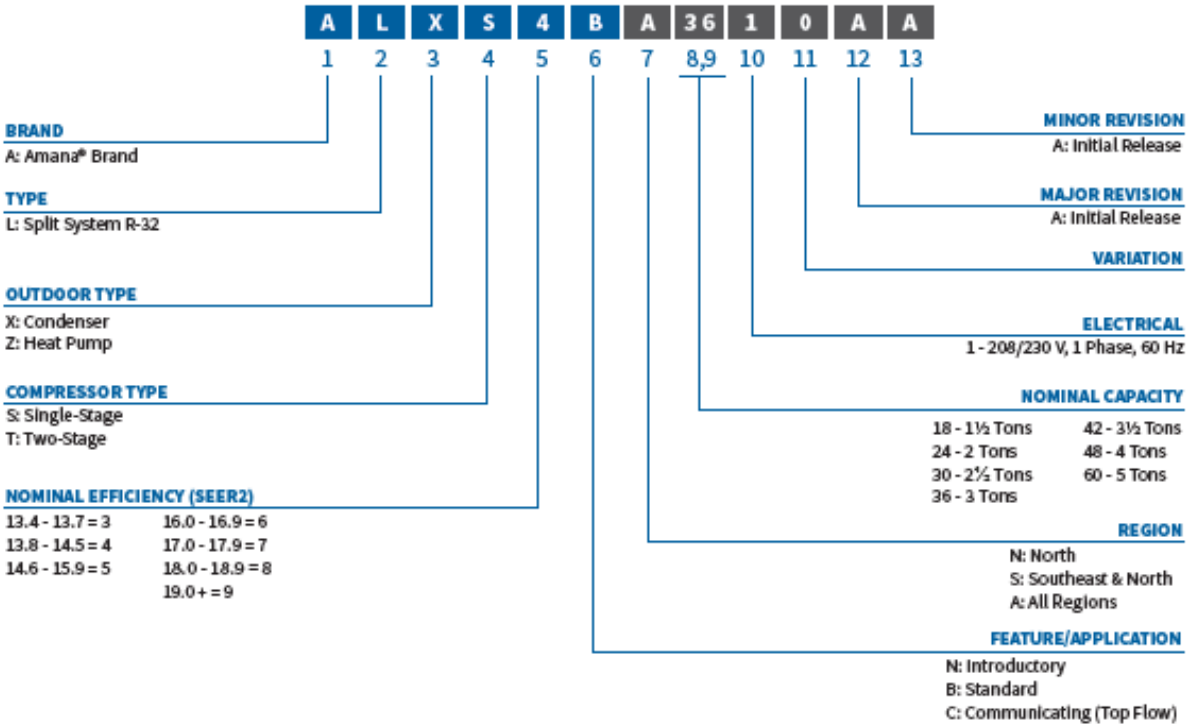

PRODUCT IDENTIFICATION NOMENCLATURE

A	M	S	T	36	B	U	1	3	00	A	A
1	2	3	4	5, 6	7	8	9	10	11, 12	13	14

PRODUCT
A: Corporate Air Handler

APPLICATION
C: Ceiling Mounted
H: Horizontal Discharge Multi-Positional
M: Multi-Positional
W: Wall Mounted

MOTOR
S: MS-ECM
V: VS-ECM Communicating

EXPANSION DEVICE
E: Electronic Expansion Valve
F: Flowrator T: Thermal Expansion Valve

NOMINAL CAPACITY RANGE

12 - 1.0 Ton	36 - 3.0 Tons
18 - 1.5 Tons	42 - 3.5 Tons
24 - 2.0 Tons	48 - 4.0 Tons
30 - 2.5 Tons	60 - 5.0 Tons

CABINET WIDTH

AC Series*	AM Series*	AW Series*
M: 43¼"	B: 17½"	S: 20¼"
L: 49¼"	C: 21"	L: 24"
	D: 24½"	

MINOR REVISION
A: Initial Release
B: 1st Revision

MAJOR REVISION
A: Initial Release
B: 1st Revision

ELECTRIC HEAT KW

REFRIGERANT
3 - R-32

ELECTRICAL
0: 115V, 1 Phase, 60 Hz
1 - 208/230 V, 1 Phase, 60 Hz

CABINET
N: Uncased
P: Painted
U: Unpainted

M	B	V	K	16	C	H	1	X	0 0	A	A
1	2	3	4	5,6	7	8	9	10	11 12	13	14

BRAND
MB - MODULAR BLOWER

MOTOR SPEED
V - VARIABLE

COMMUNICATING CONTROLS PROTOCOL
B - COMFORTBRIDGE
K - CLIMATETALK

AIRFLOW DELIVERED
12 - 1200 CFM
16 - 1600 CFM
20 - 2000 CFM

MINOR REVISION
A

MAJOR REVISION
A

FACTORY INSTALLED ELECTRIC HEAT KW
00 -NO ELECTRIC HEAT

CIRCUIT BREAKER
X - NO CIRCUIT BREAKER

ELECTRICAL
1 208/230 V, 1 PHASE, 60 HZ
0 115V, 1 PHASE, 60 HZ

CABINET
P - STANDARD
H - HIGH EFFICIENCY COLD CLIMATE

CABINET WIDTH
B - 17.5"
C - 21.0"
D - 24.5"

PRODUCT IDENTIFICATION NOMENCLATURE

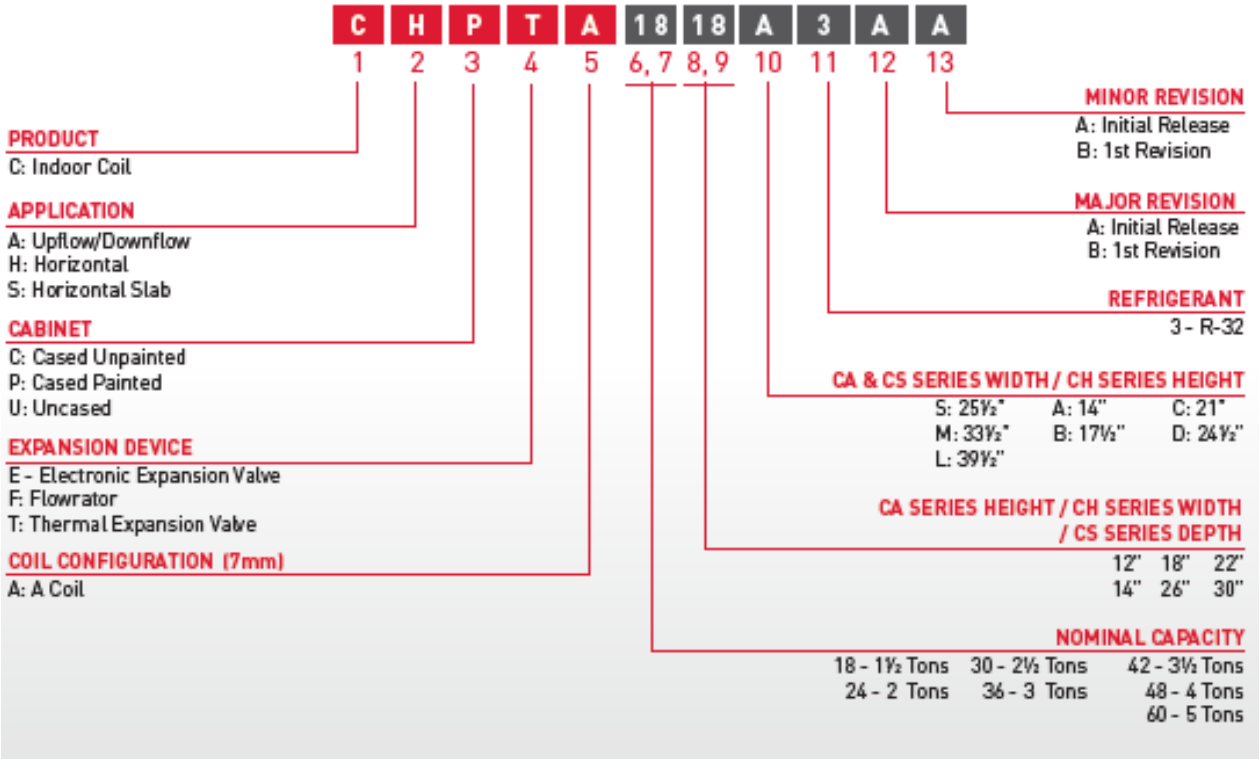

PRODUCT IDENTIFICATION

AMANA® Brand R-32 SINGLE STAGE A-BASE UNIT CONDENSERS

Model/Rev	Description
ALXS3BN**10AA	Initial release of Amana® Brand 13.4-13.7 SEER2 AC R-32 (North)
ALXS4BA**10AA	Initial release of Amana® Brand 13.8-14.5 SEER2 AC R-32 (All Regions)
ALXS4NA**10AA	Initial release of Amana® Brand 13.8-14.5 SEER2 AC R-32 (North)
ALXS5BA**10AA	Initial release of Amana® Brand 14.6-15.9 SEER2 AC R-32 (All Regions)
ALXS5BA**10AA	Initial release of Amana® Brand 14.6-15.9 SEER2 AC R-32 (All Regions)
ALZS4BA**10AA	Initial release of Amana® Brand 13.8-14.5 SEER2 HP R-32 (All Regions)
ALZS4NA**10AA	Initial release of Amana® Brand 13.8-14.5 SEER2 HP R-32 (North)
ALZS5BA**10AA	Initial release of Amana® Brand 14.6-15.9 SEER2 HP R-32 (All Regions)

GOODMAN R-32 SINGLE STAGE A-BASE UNIT CONDENSERS

Model/Rev	Description
GLXS3BN**10AA	Initial release of Goodman 13.4-13.7 SEER2 AC R-32 (North)
GLXS4BA**10AA	Initial release of Goodman 13.8-14.5 SEER2 AC R-32 (All Regions)
GLXS4MA**10AA	Initial release of Goodman 13.8-14.5 SEER2 AC R-32 (Multi-Family)
GLXS5BA**10AA	Initial release of Goodman 14.6-15.9 SEER2 AC R-32 (All Regions)
GLXS5BA**10AA	Initial release of Goodman 14.6-15.9 SEER2 AC R-32 (All Regions)
GLZS4BA**10AA	Initial release of Goodman 13.8-14.5 SEER2 HP R-32 (All Regions)
GLZS4MA**10AA	Initial release of Goodman 13.8-14.5 SEER2 HP R-32 (Multi-Family)
GLZS5BA**10AA	Initial release of Goodman 14.6-15.9 SEER2 HP R-32 (All Regions)

GMC Brand R-32 SINGLE STAGE BASE UNIT CONDENSER

Model/Rev	Description
VLXS3BN**10AA	New Volume Brand compliant with federal minimum standard 13.4 SEER2 (North Only)
VLXS4BA**10AA	New Volume Brand compliant with federal minimum standard 14.3 SEER2 (All Regions)
VLZS4BA**10AA	New Volume Brand compliant with federal minimum standard 14.3 SEER2 (All Regions)

CORPORATE CASED AND UNCASED COILS

Model/Rev	Description
CAPFA*****3AA	Initial release of Corporate Multi-Position R-32 Evaporator Coil
CAPTA*****3AA	Initial release of Corporate Multi-Position R-32 Evaporator Coil
CAUTA*****3AA	Initial release of Corporate Uncased R-32 Evaporator Coil
CHPTA*****3AA	Initial release of Corporate Multi-Position R-32 Horizontal Evaporator Coil
CSCT****3AA	Initial release of Corporate Horizontal Slab R-32 Evaporator Coil

CORPORATE R-32 AIR HANDLER

Model/Rev	Description
AWST****13**AA	Initial release of Corporate Wall Mount R-32 Air Handler
AMST***U1300AA	Initial release of Corporate Multi-position R-32 Air Handler
ACST***U13**AA	Initial release of Corporate Ceiling Mount R-32 Air Handler

Corporate Modular Blower

Model/Rev	Description
MBVK**BP1X00A*	Initial Release of Corporate Modular R32 Blower
MBVB**BP1X00A*	Initial Release of Corporate Modular R32 Blower

PRODUCT DESIGN

This section gives a basic description of cooling unit operation, its various components and their basic operation. Ensure your system is properly sized for heat gain and loss according to methods of the Air Conditioning Contractors Association (ACCA) or equivalent.

Condensing Unit
The condenser air is pulled through the condenser coil by a direct drive propeller fan. This condenser air is then discharged out of the top of the cabinet. These units are designed for free air discharge, so no additional resistance, like duct work, shall be attached.

The suction and liquid line connections on present models are of the sweat type for field piping with refrigerant type copper. Front seating valves are factory installed to accept the field run copper. The total refrigerant charge for a normal installation is factory installed in the condensing unit.

New R-32 models ALXS, GLXS, VLXS, ALZS, GLZS and VLZS are available in 1 ½ through 5 ton sizes and use refrigerant. They are designed for 208/230 volt single phase applications.

ALXS, ALZS R-32 model units use the Copeland YP**K1 R-32 scroll compressors which are specifically designed for R-32 refrigerant. These units also have Copeland® CoreSense diagnostics.

ALXS3BN, GLXS3BN, GLSX4BA, GLSX4MA, VLXS3BN, VLXS4BA use a mix of Scroll and Energy Efficient compressors which are specifically designed for refrigerant. There are several design characteristics which are different from the traditional reciprocating and/or scroll compressors. “Ultratech” Series scroll compressors will not have a discharge thermostat. Some of the early model scroll compressors required discharge thermostat.

R-32 compressors use “POE” or polyolester oil which is NOT compatible with mineral oil based lubricants like 3GS. “POE” oil must be used if additional oil is required.

The CAP*A coils are designed for upflow and counterflow applications. The CHP*A and CSCT coils are designed for horizontal applications.

MBVB/MBVK blower cabinets are designed to be used as a two-piece blower and coil combination. MBVB/MBVK blower sections can be attached to cased evaporator coil. This two-piece arrangement allows for a variety of matching possibilities providing greater flexibility. The MBVB/MBVK blower cabinets use a variable speed motor that maintains a constant airflow with higher duct static .MBVB/MBVK blower cabinets are approved for applications with cooling coils of up to 0.8 inches W.C. external static pressure. The MBVB/MBVK models allow airflow trimming of +/-10%. The MBVB/MBVK blower cabinets with proper coil matches can be positioned for upflow, counterflow, horizontal right or horizontal left operation. All units are constructed with R-4.2 insulation. In areas of extreme humidity (greater than 80% consistently), insulate the exterior of the blower with insulation having a vapor barrier equivalent to ductwork insulation, providing local codes permit.

AMST
Multi-Position Air Handler
These one-piece multi-position air handlers are used with and are available in 2 to 5 ton sizes with optional 3 kW to 25kW electric heat kits available for field installation. Units use an EEM blower motor and are compatible with heat pumps and cooling applications.

This appliance can be installed in the vertical or left horizontal position without modification. The horizontal right and downflow positions require product modification. This product is designed for zero inches (0 inches) clearance; however, adequate access for service or replacement must be considered without removing permanent structure. This unit can be installed on a platform when deemed necessary.

In an attic installation a secondary drain pan must be provided by the installer and placed under the entire unit with a separate drain line properly sloped and terminated in an area visible to the owner. This secondary drain pan is required in the event that there is a leak or main drain blockage. Closed cell insulation should be applied to the drain lines in unconditioned spaces where sweating may occur.

NOTE: Single piece air handlers are factory-sealed to achieve a 2% or less leakage rate at 1.0” water gauge external duct static pressure.

R-32 model numbers that use two stage compressors series split system units use a two-stage scroll compressor. The two-step modulator has an internal unloading mechanism that opens a bypass port in the first compression pocket, effectively reducing the displacement of the scroll. The opening and closing of the bypass port is controlled by an internal electrically operated solenoid.

PRODUCT DESIGN

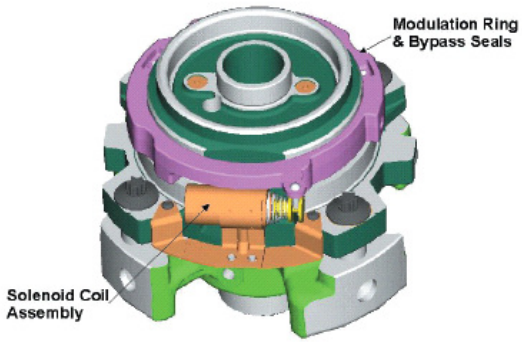

The new Copeland model numbers YPS**K1 R-32 compressors two-step modulated scroll uses a single step of unloading to go from full capacity to approximately 67% capacity. A single speed, high efficiency motor continues to run while the scroll modulates between the two capacity steps.

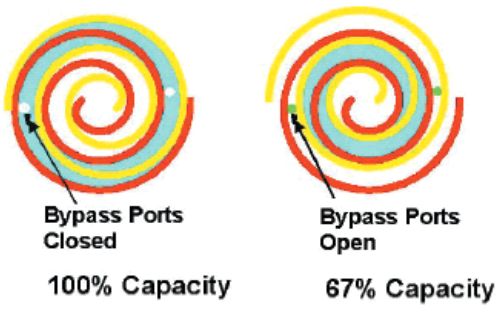

FIGURE A

A scroll is an involute spiral which, when matched with a mating scroll form as shown, generates a series of crescent shaped gas pockets between the two members.

During compression, one scroll remains stationary (fixed scroll) while the other form (orbiting scroll) is allowed to orbit (but not rotate) around the first form.

As this motion occurs, the pockets between the two forms are slowly pushed to the center of the two scrolls while simultaneously being reduced in volume. When the pocket reaches the center of the scroll form, the gas, which is now at a high pressure, is discharged out of a port located at the center.

During compression, several pockets are being compressed simultaneously, resulting in a very smooth process. Both the suction process (outer portion of the scroll members) and the discharge process (inner portion) are continuous.

Some design characteristics of the Compliant Scroll compressor are:

- Compliant Scroll compressors are more tolerant of liquid refrigerant.

NOTE: Even though the compressor section of a Scroll compressor is more tolerant of liquid refrigerant, continued floodback or flooded start conditions may wash oil from the bearing surfaces causing premature bearing failure.

- “Ultratech” Series scroll compressors use “POE” or polyolester oil which is NOT compatible with mineral oil based lubricants like 3GS. “POE” oil must be used if additional oil is required.
- Compliant scroll compressors perform “quiet” shutdowns that allow the compressor to restart immediately without the need for a time delay. This compressor will restart even if the system has not equalized.

NOTE: Operating pressures and amp draws may differ from standard reciprocating compressors. This information can be found in the unit’s Technical Information Manual.

Capacity Control - Legacy Models

During the compression process, there are several pockets within the scroll that are compressing gas. Modulation is achieved by venting a portion of the gas in the first suction pocket back to the low side of the compressor thereby reducing the effective displacement of the compressor. See Figure A. Full capacity is achieved by blocking these vents, increasing the displacement to 100%. A solenoid in the compressor, controlled by an external 24-volt ac signal, moves the slider ring that covers and uncovers these vents. The vent covers are arranged in such a manner that the compressor operates somewhere around 67% capacity when the solenoid is not energized and 100% capacity when the solenoid is energized. The loading and unloading of the two step scroll is done “on the fly” without shutting off the motor between steps. See Figure B below. The unloaded mode default was chosen for two reasons:

PRODUCT DESIGN

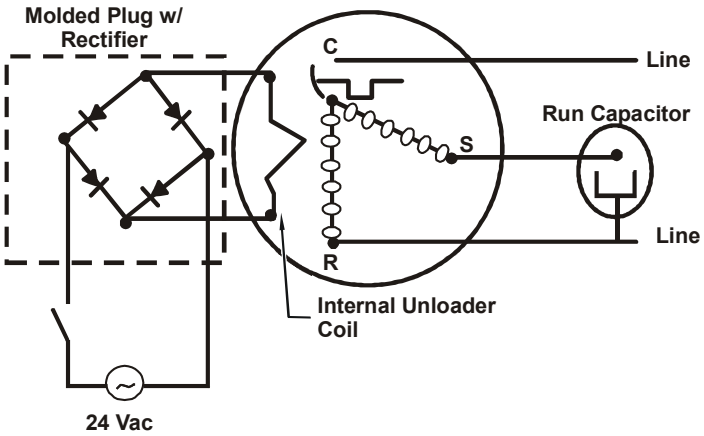

FIGURE B

1. It is expected that the majority of run hours will be in the low capacity, unloaded mode.
2. It allows a simple two-stage thermostat to control capacity through the second stage in both cooling and possibly heating if desired.

Unloader Solenoid
A nominal 24-volt direct current coil activates the internal unloader solenoid. The input control circuit voltage must be 18 to 28 volt ac. The coil power requirement is 20 VA. The external electrical connection is made with a molded plug assembly. This plug is connected to the Comfort Alert™ or CoreSense™ Module (dependent upon which module you are using) which contains a full wave rectifier to supply direct current to the unloader coil.

SYSTEM OPERATION

Cooling Cycle

For legacy room thermostat: When the room thermostat calls for cool, the contacts of the room thermostat close making terminals R to Y1 & G (if thermostat calls for low stage cool), or R to Y1, Y2 & G (if thermostat calls for high stage cool), the low voltage circuit of the transformer is completed. Current now flows through the magnetic holding coils of the compressor contactor (CC) and fan relay (RFC). If thermostat calls for high stage cool, the microprocessor on the UC board will also energize the compressor high stage solenoid to run the compressor at full capacity.

This draws in the normally open contact CC, starting the compressor and condenser fan motors in either low or high stage depending on the thermostat's demand. At the same time, contacts RFC close, starting the indoor fan motor. When the thermostat is satisfied, it opens its contacts, breaking the low voltage circuit, causing the compressor contactor and indoor fan relay to open, shutting down the system.

If the room thermostat fan selector switch should be set on the "on" position, then the indoor blower would run continuously rather than cycling with the compressor. R-32 heat pump models energize the reversing valve through the "O" circuit in the room thermostat. Therefore, the reversing valve remains energized as long as the thermostat subbase is in the cooling position. The only exception to this is during defrost.

For heat pumps, during cooling cycle the reversing valve is energized as the room thermostat closes "O" terminal to R and the microprocessor on the UC board responds to such a condition by energizing the solenoid coil on the reversing valve.

Defrost Cycle

The defrosting of the outdoor coil is jointly controlled by the defrost control board and the defrost thermostat.

Solid State Defrost Control

During operation the power to the circuit board is controlled by a temperature sensor, which is clamped to a return bend (⅜" coils) or a feeder tube (5 mm coils) entering the outdoor coil. Defrost timing periods of 30, 60, or 90 minutes may be selected by connecting the circuit board jumper to 30, 60, or 90 respectively. Accumulation of time for the timing period selected starts when the sensor closes (approximately 31°F), and when the room thermostat calls for heat. At the end of the timing period, the unit's defrost cycle will be initiated provided the sensor remains closed. When the sensor opens (approximately 75°F), the defrost cycle is terminated and the timing period is reset. If the defrost cycle is not terminated due to the sensor temperature, a ten minute override interrupts the unit's defrost period. The new upgraded defrost control has a 12 minute override interrupt.

Cooling Cycle

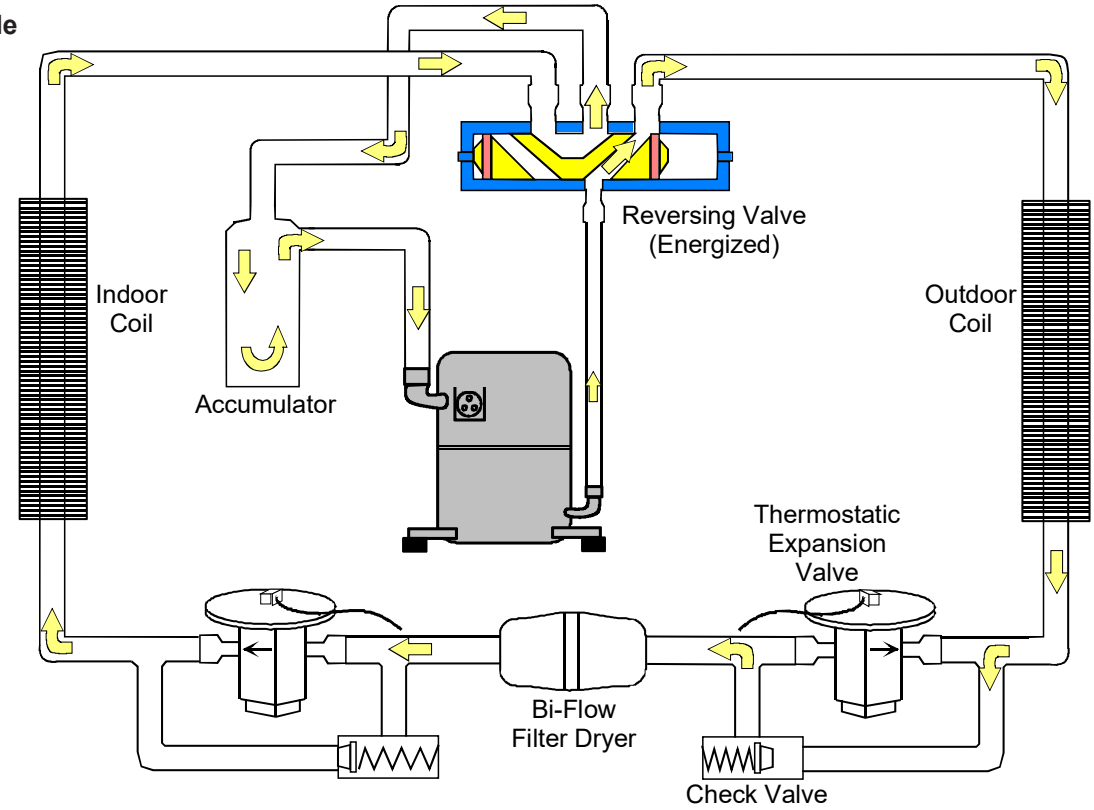

SYSTEM OPERATION

Heating Cycle
The reversing valve on the models is energized in the cooling cycle through the “O” terminal on the room thermostat.

These models have a 24 volt reversing valve coil. When the thermostat selector switch is set in the cooling position, the “O” terminal on the thermostat is energized all the time.

Care must be taken when selecting a room thermostat. Refer to the installation instructions shipped with the product for approved thermostats.

When the room thermostat calls for heat, the contacts of the room thermostat close making terminals R to Y & G, the low voltage circuit of the transformer is completed. Current now flows through the magnetic holding coils of the compressor contactor (CC) and fan relay (RFC).

This draws in the normally open contact CC, starting the compressor condenser fan motors. At the same time, contacts RFC close, starting the indoor fan motor.

When the thermostat is satisfied, it opens its contacts, breaking the low voltage circuit, causing the compressor contactor and indoor fan relay to open, shutting down the system.

If the room thermostat fan selector switch should be set to the “on” position, then the indoor blower would run continuously rather than cycling with the compressor.

When the thermostat is satisfied, appropriate commands are sent to the UC control. The compressor relay and outdoor fan relay is de-energized. The compressor high stage solenoid is de-energized if it was energized. The UC control sends an appropriate command to the indoor unit to de-energize the indoor blower motor.

Heating Cycle

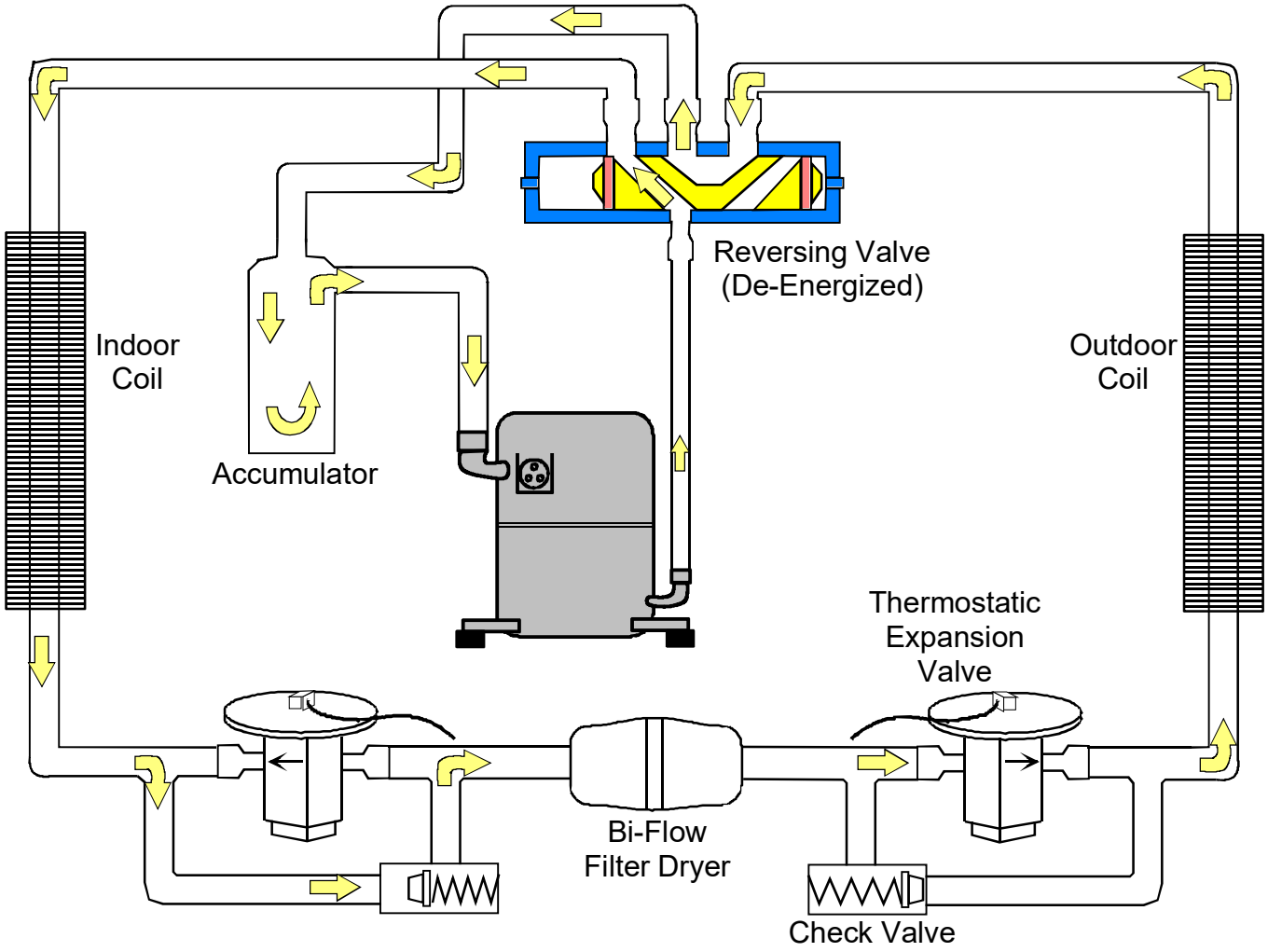

SYSTEM OPERATION

Expansion Valve/Check Valve Assembly In Cooling Operation

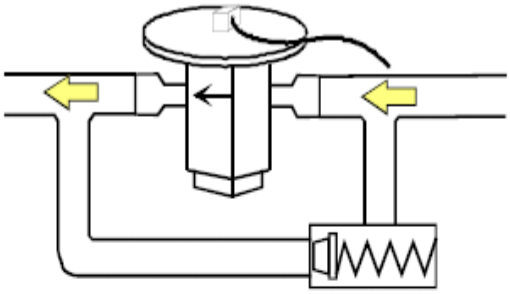

Expansion Valve/Check Valve Assembly In Heating Operation

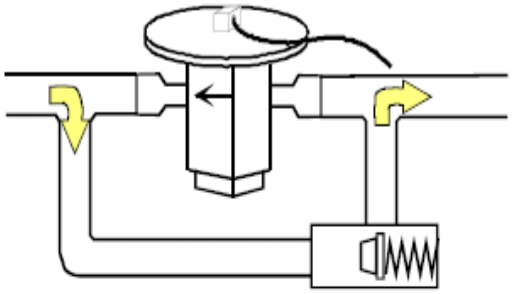

Most expansion valves used in current Heat Pump products use an internally checked expansion valve. This type of expansion valve does not require an external check valve as shown above.

Restrictor Orifice Assy in Cooling Operation

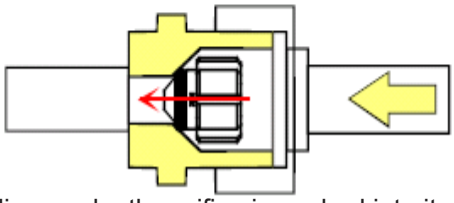

In the cooling mode, the orifice is pushed into its seat, forcing refrigerant to flow through the metered hole in the center of the orifice.

Restrictor Orifice Assy in Heating Operation

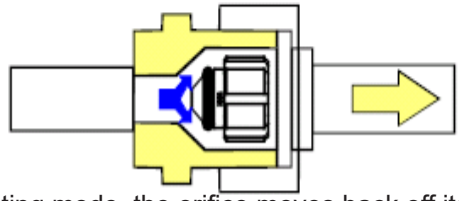

In the heating mode, the orifice moves back off its seat allowing refrigerant to flow unmetered around the outside of the orifice.

SERVICING

Checking Voltage

1. Remove outer case, control panel cover, etc., from unit being tested.

With power ON:

WARNING

LINE VOLTAGE NOW PRESENT.

2. Using a voltmeter, measure the voltage across terminals L1 and L2 of the contactor for the condensing unit or at the field connections for the air handler or heaters.
3. No reading - indicates open wiring, open fuse(s) no power or etc., from unit to fused disconnect service. Repair as needed.
4. With ample voltage at line voltage connectors, energize the unit.
5. Measure the voltage with the unit starting and operating, and determine the unit Locked Rotor Voltage.

NOTE: If checking heaters, be sure all heating elements are energized.

Locked Rotor Voltage is the actual voltage available at the compressor during starting, locked rotor, or a stalled condition. Measured voltage should be above minimum listed in chart below.

To measure Locked Rotor Voltage attach a voltmeter to the run "R" and common "C" terminals of the compressor, or to the T1 and T2 terminals of the contactor. Start the unit and allow the compressor to run for several seconds, then shut down the unit. Immediately attempt to restart the unit while measuring the Locked Rotor Voltage.

6. Locked rotor voltage should read within the voltage tabulation as shown. If the voltage falls below the minimum voltage, check the line wire size. Long runs of undersized wire can cause low voltage. If wire size is adequate, notify the local power company in regard to either low or high voltage.

Unit Supply Voltage		
Voltage	Min.	Max
208/230	197	253
460	414	506

NOTE: When operating electric heaters on voltages other than 240 volts, refer to the System Operation section on electric heaters to calculate temperature rise and air flow. Low voltage may cause insufficient heating.

Checking Wiring

WARNING

HIGH VOLTAGE!
DISCONNECT ALL POWER BEFORE SERVICING OR INSTALLING. MULTIPLE POWER SOURCES MAY BE PRESENT. FAILURE TO DO SO MAY CAUSE PROPERTY DAMAGE, PERSONAL INJURY OR DEATH.

1. Check wiring visually for signs of overheating, damaged insulation and loose connections.
2. Use an ohmmeter to check continuity of any suspected open wires.
3. If any wires must be replaced, replace with comparable gauge and insulation thickness.

Checking Thermostat And Wiring

Thermostat Wiring: The maximum wire length for 18 AWG thermostat wire is 100 feet.

Thermostat Wiring

WARNING

LINE VOLTAGE NOW PRESENT.

With power ON, thermostat calling for cooling

1. Use a voltmeter to check for 24 volts at thermostat wires C and Y in the condensing unit control panel.
2. No voltage indicates trouble in the thermostat, wiring or external transformer source.
3. Check the continuity of the thermostat and wiring. Repair or replace as necessary.

Indoor Blower Motor

With power ON:

WARNING

LINE VOLTAGE NOW PRESENT.

1. Set fan selector switch at thermostat to “ON” position.
2. With voltmeter, check for 24 volts at wires C and G.
3. No voltage indicates the trouble is in the thermostat or wiring.
4. Check the continuity of the thermostat and wiring. Repair or replace as necessary.

SERVICING

Resistance Heaters

1. Set room thermostat to a higher setting than room temperature so both stages call for heat.
2. With voltmeter, check for 24 volts at each heater relay.
3. No voltage indicates the trouble is in the thermostat or wiring.
4. Check the continuity of the thermostat and wiring. Repair or replace as necessary.

NOTE: Consideration must be given to how the heaters are wired (O.D.T. and etc.). Also safety devices must be checked for continuity.

Checking Transformer And Control Circuit

WARNING

HIGH VOLTAGE!
DISCONNECT ALL POWER BEFORE SERVICING OR INSTALLING. MULTIPLE POWER SOURCES MAY BE PRESENT. FAILURE TO DO SO MAY CAUSE PROPERTY DAMAGE, PERSONAL INJURY OR DEATH.

A step-down transformer (208/240 volt primary to 24 volt secondary) is provided with each indoor unit. This allows ample capacity for use with resistance heaters. The outdoor sections do not contain a transformer (see note below).

WARNING

DISCONNECT ALL POWER BEFORE SERVICING.

1. Remove control panel cover, or etc., to gain access to transformer.

With power ON:

WARNING

LINE VOLTAGE NOW PRESENT.

2. Using a voltmeter, check voltage across secondary voltage side of transformer (R to C).
3. No voltage indicates faulty transformer, bad wiring, or bad splices.
4. Check transformer primary voltage at incoming line voltage connections and/or splices.
5. If line voltage available at primary voltage side of transformer and wiring and splices good, transformer is inoperative. Replace.

Checking Contactor And/Or Relays

WARNING

HIGH VOLTAGE!
DISCONNECT ALL POWER BEFORE SERVICING OR INSTALLING. MULTIPLE POWER SOURCES MAY BE PRESENT. FAILURE TO DO SO MAY CAUSE PROPERTY DAMAGE, PERSONAL INJURY OR DEATH.

The compressor contactor and other relay holding coils are wired into the low or line voltage circuits. When the control circuit is energized, the coil pulls in the normally open contacts or opens the normally closed contacts. When the coil is de-energized, springs return the contacts to their normal position.

Checking Contactor Contacts

WARNING

DISCONNECT ALL POWER BEFORE SERVICING.

Single Phase:

1. Disconnect the wire leads from the terminal (T) side of the contactor.
2. With power ON, energize the contactor.

WARNING

LINE VOLTAGE NOW PRESENT.

3. Using a voltmeter, test across terminals.
   a. L2 - T1 - No voltage indicates CC1 contacts open.

If a no voltage reading is obtained - replace the contactor.

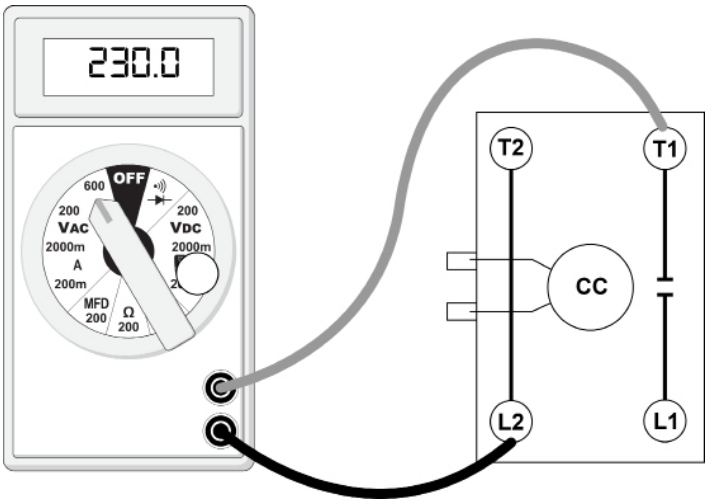

Testing Compressor Contactor (Single Phase)

SERVICING

Checking Fan Relay Contacts

WARNING

High Voltage!
Disconnect all power before servicing or installing. Multiple power sources may be present. Failure to do so may cause property damage, personal injury or death.

1. Disconnect wire leads from terminals 2 and 4 of Fan Relay Cooling and 2 and 4, 5 and 4 and 5 of Fan Relay Heating.
2. Using an ohmmeter, test between 2 and 4 - should read open. Test between 5 and 4 and 5 - should read continuous.
3. With power ON, energize the relays.

WARNING

Line voltage now present.

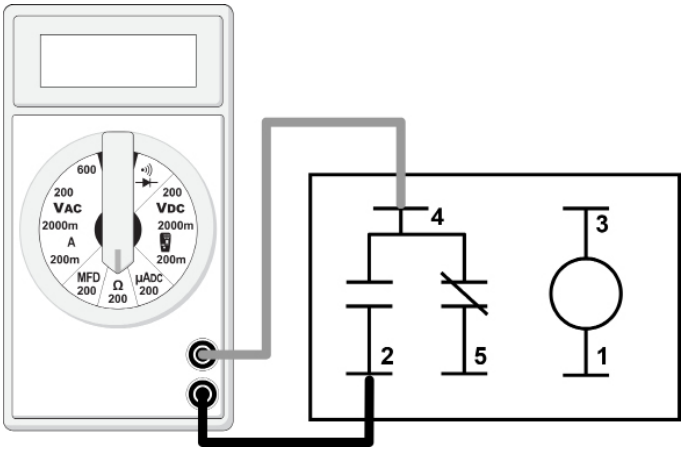

Testing Fan Relay

4. Using an ohmmeter, test between 2 and 4 - should read continuous. Test between 5 and 4 and 5 - should read open.
5. If not as above, replace the relay.

Checking High Pressure Control

WARNING

High Voltage!
Disconnect all power before servicing or installing. Multiple power sources may be present. Failure to do so may cause property damage, personal injury or death.

The high pressure control capillary senses the pressure in the compressor discharge line. If abnormally high condensing pressures develop, the contacts of the control open, breaking the control circuit before the compressor motor overloads. This control is automatically reset.

Test 1. Testing High Pressure Control in Cooling Mode

1. Connect refrigerant gages to unit.
2. Disconnect power to outdoor unit.
3. Remove control panel cover.
4. Disconnect black wire from condenser fan motor (single stage units) or remove plug from control board on 2 stage units. NOTE: Tape or isolate black wire to prevent possible short.
5. Apply power to unit and set thermostat to cool and set for all for cool.
6. High pressure switch should open at 660 PSIG +/- 10 PSIG and close at 475 PSIG +/- 25 PSIG.
7. If high pressure switch does not operate in these parameters replace switch.

Test 2. Testing High Pressure Control in Heating Mode

1. Connect refrigerant gages to unit.
2. Disconnect power to indoor unit.
3. Remove control panel cover.
4. Disconnect black wire from evaporator fan motor (single stage units) or remove plug from control board on 2 stage units. NOTE: Tape or isolate black wire to prevent possible short.
5. Apply power to unit and set thermostat to heat and set for call for heat.
6. High pressure switch should open at 660 PSIG +/- 10 PSIG and close at 475 PSIG +/- 25 PSIG.
7. If high pressure switch does not operate in these parameters replace switch.

With power ON:

WARNING

Line voltage now present.

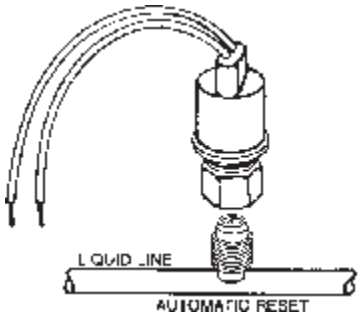

Checking Low Pressure Control

The low pressure control senses the pressure in the suction line and will open its contacts on a drop in pressure. The low pressure control will automatically reset itself with a rise in pressure.

Test 1. Testing Low Pressure Control in Cooling Mode

1. Connect refrigerant gages to unit.
2. Disconnect power to indoor unit.
3. Remove control panel cover.
4. Disconnect black wire from evaporator fan motor (single stage units) or remove plug from control board on 2 stage units. NOTE: Tape or isolate black wire to prevent possible short.
5. Apply power to unit and set thermostat to cool and set for a call for cool.
6. Low pressure switch should open at 21 PSIG, and auto reset (close) at approximately 50 PSIG.
7. If low pressure switch does not operate in these parameters replace switch.

Test 2. Testing Low Pressure Control in Heating Mode

1. Connect refrigerant gages to unit.
2. Disconnect power to outdoor unit.
3. Remove control panel cover.
4. Disconnect black wire from condenser fan motor (single stage units) or remove plug from control board on 2 stage units. NOTE: Tape or isolate black wire to prevent possible short.
5. Apply power to unit and set thermostat to heat and set for a call for heat.
6. Low pressure switch should open at 21 PSIG and auto reset (close) at approximately 50 PSIG.
7. If low pressure switch does not operate in these parameters replace switch.

Copeland Coresense™ Diagnostics - 3-Wire module Applies to Amana Brand ALXS and ALZS units

WARNING

HIGH VOLTAGE!
DISCONNECT ALL POWER BEFORE SERVICING OR INSTALLING. MULTIPLE POWER SOURCES MAY BE PRESENT. FAILURE TO DO SO MAY CAUSE PROPERTY DAMAGE, PERSONAL INJURY OR DEATH.

The CoreSense™ module is self-contained with no required external sensors and works with any residential condensing unit that has a Copeland Scroll™ compressor inside.

Once attached, CoreSense™ provides around-the-clock monitoring for common electrical problems, compressor defects and broad system faults. If a glitch is detected, an LED indicator flashes the proper alert codes to help you quickly pinpoint the problem. *See Diagnostic Table: 3-Wire CoreSense™ Module on following pages.*

SERVICING

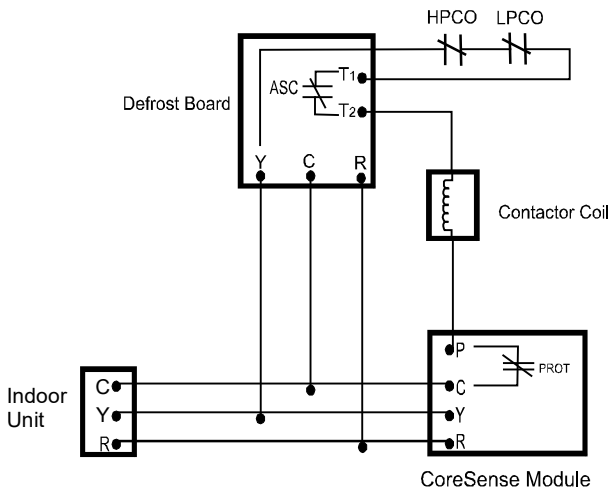

Schematic Abbreviation Descriptions

HTCO	High Temperature Cut Out Switch	CC	Compressor Contactor
HPCO	High Pressure Cut Out Switch	ECB	Electronic Control Board (Defrost or Time Delay)
LPCO	Low Pressure Cut Out Switch		

Wiring Schematic - 3-Wire Coresense™ Alert Module

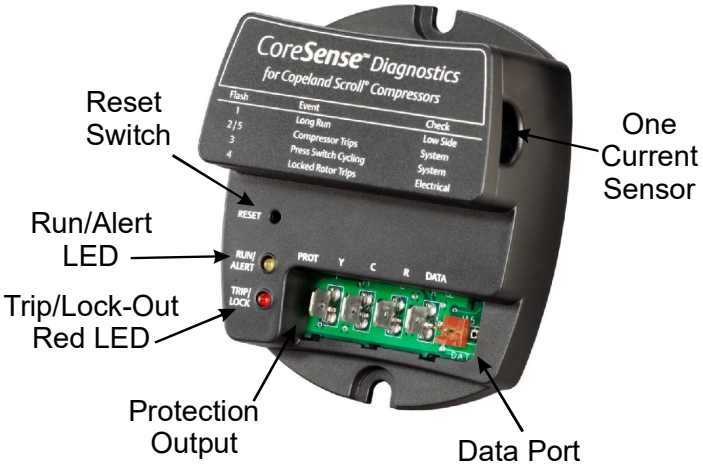

Diagnostics - 2-Wire Module
Applies to

WARNING

HIGH VOLTAGE!
DISCONNECT ALL POWER BEFORE SERVICING OR INSTALLING. MULTIPLE POWER SOURCES MAY BE PRESENT. FAILURE TO DO SO MAY CAUSE PROPERTY DAMAGE, PERSONAL INJURY OR DEATH.

The CoreSense™ module is self-contained with no required external sensors and works with any residential condensing unit that has a Copeland Scroll™ compressor inside.

Once attached, CoreSense™ provides around-the-clock monitoring for common electrical problems, compressor defects and broad system faults. If a glitch is detected, an LED indicator flashes the proper alert codes to help you quickly pinpoint the problem. *See Diagnostic Table: 2-Wire Comfort Alert™ Module on following pages.)*

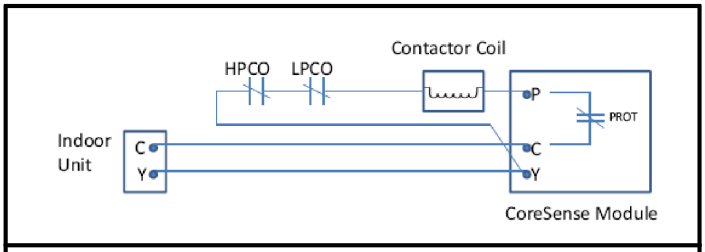

Schematic Abbreviation Descriptions

HTCO	High Temperature Cut Out Switch	CC	Compressor Contactor
HPCO	High Pressure Cut Out Switch	ECB	Electronic Control Board (Defrost or Time Delay)
LPCO	Low Pressure Cut Out Switch		

SERVICING

Diagnostics Table: Coresense™ Module

Flash code number corresponds to the number of LED flashes, followed by a pause and then repeated. TRIP and ALERT LEDs flashing at the same time mean control circuit voltage is too low for operation.

Status	Description	Troubleshooting Information
Solid Yellow "RUN"	Module has power and operating normally	Supply voltage is present at module terminals
Solid Red "TRIP"	Thermostat demand signal Y is present, but the compressor is not running	1. Compressor protector is open • Check for high head pressure • Check compressor supply voltage 2. Outdoor unit power disconnect is open 3. Compressor circuit breaker or fuse(s) is open 4. Broken wire or connector is not making contact 5. High pressure switch open if present in system 6. Compressor contactor has failed open
"ALERT" Flash Codes		
Yellow "ALERT" Flash Code 1	Long Run Time; Compressor is running extremely long run cycles indicative of low capacity due to a system low-side fault	1. Low refrigerant charge 2. Evaporator blower is not running • Check blower relay coil and contacts • Check blower motor capacitor • Check blower motor for failure or blockage • Check evaporator blower wiring and connectors • Check indoor blower control board • Check thermostat wiring for open circuit 3. Evaporator coil is frozen • Check for low suction pressure • Check for excessively low thermostat setting • Check evaporator airflow (coil blockages or return air filter) • Check ductwork or registers for blockage 4. Faulty metering device • Check TXV bulb installation (size, location and contact) • Check if TXV/fixed orifice is stuck closed or defective 5. Liquid line restriction (filter drier blocked if present in system) 6. Thermostat is malfunctioning • Check thermostat sub-base or wiring for short circuit • Check thermostat installation (location, level)
Yellow "ALERT" Flash Code 2	Compressor (Pressure) Trip; Discharge pressure out of limits or compressor overloaded	1. Condenser fan is not running • Check fan capacitor • Check fan wiring and connectors • Check fan motor for failure or blockage 2. High head pressure • Check high pressure switch if present in system • Check if system is overcharged with refrigerant • Check for non-condensable in system 3. Condenser coil poor air circulation (dirty, blocked, damaged)
Yellow "ALERT" Flash Code 3	Short Cycling; Compressor is running only briefly	1. Thermostat demand signal is intermittent 2. Time delay relay or control board defective 3. Low or high pressure switch is cycling

SERVICING

Diagnostics Table: Coresense™ Module

Flash code number corresponds to the number of LED flashes, followed by a pause and then repeated. TRIP and ALERT LEDs flashing at the same time mean control circuit voltage is too low for operation.

Status	Description	Troubleshooting Information
Yellow "ALERT" Flash Code 4	Locked Rotor	1. Run capacitor has failed 2. Low line voltage (contact utility if voltage at disconnect is low) • Check wiring connections 3. Excessive liquid refrigerant in compressor 4. Compressor bearings are seized • Measure compressor oil level
Yellow "ALERT" Flash Code 5	Compressor (Moderate Run) Trip	1. Evaporator blower is not running • Check blower relay coil and contacts • Check blower motor capacitor • Check blower motor for failure or blockage • Check evaporator blower wiring and connectors • Check indoor blower control board • Check thermostat wiring for open circuit 2. Faulty metering device • Check TXV bulb installation (size, location and contact) • Check if TXV/fixed orifice is stuck closed or defective 3. Condenser coil poor air circulation (dirty, blocked, damaged) 4. Low refrigerant charge
"LOCK" Flash Codes		
Red "LOCK" Flash Code 2 Yellow Off	Compressor (Pressure) Trip; Compressor is locked out after 4 consecutive or 10 total compressor (pressure) trip events	1. Condenser fan is not running • Check fan capacitor • Check fan wiring and connectors • Check fan motor for failure or blockage 2. High head pressure • Check high pressure switch if present in system • Check if system is overcharged with refrigerant • Check for non-condensable in system 3. Condenser coil poor air circulation (dirty, blocked, damaged)
Red "LOCK" Flash Code 3 Yellow Off	Short Cycling; Compressor is locked out after 10 consecutive short cycling events	1. Thermostat demand signal is intermittent 2. Time delay relay or control board defective 3. If high pressure switch present go to Flash Code 2 information
Red "LOCK" Flash Code 4 Yellow Off	Locked Rotor; Compressor is locked out after 10 consecutive locked rotor events	1. Run capacitor has failed 2. Low line voltage (contact utility if voltage at disconnect is low) • Check wiring connections 3. Excessive liquid refrigerant in compressor 4. Compressor bearings are seized • Measure compressor oil level
Red "LOCK" Flash Code 5 Yellow Off	Compressor (Moderate Run) Trip; Compressor is locked out after 4 consecutive or 10 total compressor (moderate run) trip events	1. Evaporator blower is not running • Check blower relay coil and contacts • Check blower motor capacitor • Check blower motor for failure or blockage • Check evaporator blower wiring and connectors • Check indoor blower control board • Check thermostat wiring for open circuit 2. Faulty metering device • Check TXV bulb installation (size, location and contact) • Check if TXV/fixed orifice is stuck closed or defective 3. Condenser coil poor air circulation (dirty, blocked, damaged) 4. Low refrigerant charge

SERVICING

Table 1 - Quick Reference Table

Alert Code	Alert Condition	Lock Level	Lock Indication
Normal Run Solid Yellow	Normal operation, no trip	N/A	N/A
Code1 Yellow Flash 1	Long run time. Compressor is on running for more than 18 hours. (Code1 is disabled in Heat Pump mode.)	N/A	N/A
Code2 Yellow Flash 2	Compressor (pressure) trip. Compressor runs for 12 sec to 15 min followed by a compressor trip condition lasting longer than 7 min.	4x consecutive	Red: Flash 2 Yellow: Off
Code3 Yellow Flash 3	Pressure switch cycling. Compressor runs for 12 sec to 15 min followed by a compressor trip lasting between 35 sec to 7 min.	4x consecutive or 10x total	Red: Flash 3 Yellow: Off
Code4 Yellow Flash 4	Locked rotor. Compressor trips within a compressor run time of 12 sec and does not start within 35 sec.	10x consecutive	Red: Flash 4 Yellow: Off
Code5 Yellow Flash 5	Compressor (moderate run) trip. Compressor runs for 15 min to 18 hrs followed by a compressor trip lasting longer than 7 min.	4x consecutive or 10x total	Red: Flash 5 Yellow: Off
Code9 Red Flash 9	The current to the PROT terminal is greater than 2A	Current > 2A for 40ms	Red: Flash 9 Yellow: Off
Trip Solid Red	Demand is present, but compressor is not running	N/A	N/A

SERVICING

Checking Capacitor

Capacitor, Run
A run capacitor is wired across the auxiliary and main windings of a single phase permanent split capacitor motor. The capacitors primary function is to reduce the line current while greatly improving the torque characteristics of a motor. This is accomplished by using the 90° phase relationship between the capacitor current and voltage in conjunction with the motor windings, so that the motor will give two phase operation when connected to a single phase circuit. The capacitor also reduces the line current to the motor by improving the power factor.

The line side of this capacitor is marked with “COM” and is wired to the line side of the circuit.

Resistance Check Using A Digital Multi-Meter

WARNING

High Voltage!
Disconnect all power before servicing or installing. Multiple power sources may be present. Failure to do so may cause property damage, personal injury or death.

Check for Digital Test

1. Set the meter on Ohm range (Set it at lease 1000 Ohm=1k).

WARNING

Discharge capacitor through a 200 to 300 OHM resistor before handling.

2. Connect the Meter leads to the Capacitor terminals.
3. Digital meter will show a reading momentarily (Figure 1). Note the reading.

Figure 1

Figure 2

4. Reading will immediately return to the OL = (Open Line) (Figure 2). Every attempt of Step 2 will show the same result as was in step 4 and Step 5. This indicates that the capacitor is good.
5. If there is no Change, then capacitor is dead and must be replaced.

Check for Analog Meter

1. Good Condition - indicator swings to zero and slowly returns to infinity (Start capacitor with bleed resistor will not return to infinity. It will still read the resistance of the resistor).
2. Shorted - indicator swings to zero and stops there - replace.
3. Open - no reading - replace (Start capacitor would read resistor resistance).

Capacitance Check Using A Digital Multi-Meter (In Capacitance Mode)

WARNING

Discharge capacitor through a 200 to 300 OHM resistor before handling.

NOTE: You can do this test with a multi-meter if you have a Capacitance meter on your multi-meter.

1. Remove the capacitor from the circuit.
2. Now Select “Capacitance” on your multi-meter.
3. Now connect the capacitor terminals to the multi-meter leads.
4. If the reading is near to the actual value of the capacitor (i.e. the printed value on the capacitor). The capacitor is good (Note that the reading may be less than the actual printed value of the capacitor).
5. If you read a significantly lower capacitance or none at all, then capacitor is dead and must be replaced.

Capacitor, Start

Scroll Compressor Models
In most cases hard start components are not required on Scroll compressor equipped units due to a non-replaceable check valve located in the discharge line of the compressor. However, in installations that encounter low lock rotor voltage, a hard start kit can improve starting characteristics and reduce light dimming within the home. Only hard start kits approved by Amana® brand or Copeland should be used. “Kick Start” and/or “Super Boost” kits are not approved start assist devices.

The discharge check valve closes off high side pressure to the compressor after shut down allowing equalization through the scroll flanks. Equalization requires only about ½ second.

SERVICING

To prevent the compressor from short cycling, a Time Delay Relay (Cycle Protector) has been added to the low voltage circuit.

Testing a Run Capacitor Under Load

1. Measure the amperage of the wire from Herm on the capacitor to start terminal on compressor.
2. Multiply the amperage reading by the constant of 2,652
3. Measure voltage across the capacitor between “HERM” and “C” terminals this is the measured voltage across the start and run terminals on the compressor.
4. Divide total from step 2 by the voltage measurement. This total is the capacitance. This give a more accurate measurement of the capacitor’s performance.
5. Read the rated MFD on the capacitor and compare to your actual readings. If outside of +/- tolerance stated on the capacitor, replacement of the capacitor may be recommended.

Formula: Start Winding Amps x 2,652 ÷ capacitor voltage = microfarads.

R-32 (PCBCM301V0001) RDS Control and Sensor Troubleshooting

Troubleshooting of RDS Control and Sensor should be carried out by trained and certified service technicians. Before replacing the RDS board, follow this troubleshooting procedure of the board and sensor. The following troubleshooting guide should be used to determine a RDS board failure, sensor failure or normal operation.

NOTE: On startup, please make sure there are no active calls for fan, heating or cooling and wait 2 minutes for the system to reach an idle state. During this 2-minute wait, you might see the blower turning on and off, you might hear relays operating on the control and see LEDs flashing. This is all normal. Please wait for the full 2 minutes before continuing with the troubleshooting.

1. Identify the RED Status LED on the control board.

Nighthawk-Mini (PCBCM301V0001) RED Status

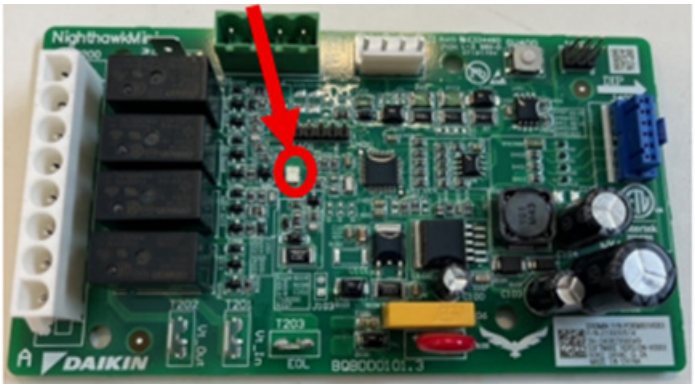

2. Determine if the control is displaying a fault. Faults requiring additional troubleshooting will start with 2, 3, or 4 quick flashes, followed by a 5 second delay and then will repeat the same flash pattern.
   a. Other flash codes (slow flash, rapid flash, or LED continuously on) do not require control or sensor troubleshooting since they indicate normal operation of the RDS control board and sensor. DO NOT REPLACE THE SENSOR OR CONTROL BOARD. In those cases, system troubleshooting elsewhere may be required if the unit is still not operating properly.

Use the table below to help troubleshoot any fault (2, 3 or 4 flash fault) of the RDS board and sensor.

SERVICING

LED STATUS CODES		
RED LED Flashing Pattern	**MODE**	**Recommended Actions**
Slow LED flashing pattern (2 seconds on and 2 seconds off) ●→○→●→○→●→○	Normal Operation	No action needed. Control system is working properly.
Fast LED Flashing Pattern ✱→✱→✱→✱→✱→✱	R32 Leak Alarm	The control board and sensor are working properly. Identify where the leak is coming from and address the leak.
LED on continuously ●	Delay Mode	After any alarm or fault has cleared, the system will remain in R32 mitigation Delay Mode for 5 minutes and then return to normal operation. Wait until the control board returns to normal operation (LED Flashing Pattern will be SLOW - 2 seconds on and 2 seconds off). Check HVAC performance (Cooling and Heating Modes). Check system pressures and lines for any leaks. Re-Check HVAC performance after addressing any issues.
LED will flash 2 times and then be off for 5 seconds before repeating the pattern ✱→✱→○→✱→✱→○	Constrol Board Internal Fault	The control board has detected an issue with the R32 detection system. 1) Unplug and plug the R32 sensor back in. Cycle power to the system and wait 2 minutes. 2) If the control board is in Normal Operation (Slow Flash Pattern) or Delay mode (LED continuously on), there is no more issue. If not, continue with diagnostics 3) If the control board still displays "Control Board Internal Fault" (2 flash pattern), **Replace the control board.**
LED will flash 3 times and then be off for 5 seconds before repeating the pattern ✱→✱→✱→○→✱→✱→✱→○	R32 Sensor Communication Fault	1) Unplug and plug the R32 sensor back in. Cycle power to the system and wait 2 minutes. 2) If the control board is in Normal Operation (Slow Flash Pattern) or Delay mode (LED continuously on), there is no more issue. If not, continue with diagnostics 3) If the control board still displays "R32 Sensor Communication Fault" (3 flash pattern), **Replace the sensor.** Note: if the sensor was already replaced, and the control board still reports the 3 flash pattern, Replace the control board.
LED will flash 4 times and then be off for 5 seconds before repeating the pattern ✱→✱→✱→✱→○→✱→✱→✱→✱→○	R32 Sensor Fault	1) Unplug and plug the R32 sensor back in. Cycle power to the system and wait 2 minutes. 2) If the control board is in Normal Operation (Slow Flash Pattern) or Delay mode (LED continuously on), there is no more issue. If not, continue with diagnostics 3) If the control board still displays "R32 Sensor Fault" (4 flash pattern), **Replace the sensor.**
LEAK DETECTION SYSTEM INSTALLED. UNIT MUST BE POWERED EXCEPT FOR SERVICE. *IF R32 LEAK ALARM IS OBSERVED, DO NOT OPEN THE UNIT OR TURN IT OFF		

LED STATUS CODES		
RED LED Flashing Pattern	**GREEN LED Flashing Pattern**	**MODE**
OFF ○	Slow LED flashing pattern (2 seconds on and 2 seconds off) ●→○→●→○→●→○	Normal Operation
OFF ○	Fast LED Flashing Pattern ✱→✱→✱→✱→✱→✱	Manual System Test (Push button 2 times to start. Push button 1 time to stop)
Fast LED Flashing Pattern ✱→✱→✱→✱→✱→✱	Slow LED flashing pattern (2 seconds on and 2 seconds off) ●→○→●→○→●→○	R32 Leak Alarm (Control detects active R32 Leak)
LED on continuously ●	Slow LED flashing pattern (2 seconds on and 2 seconds off) ●→○→●→○→●→○	Delay Mode (system will return to Normal Operation in 5 minutes)
LED will flash 2 times and then be off for 5 seconds before repeating the pattern ✱→✱→○→✱→✱→○	OFF ○	Control Board Internal Fault (Replace the control board)
LED will flash 3 times and then be off for 5 seconds before repeating the pattern ✱→✱→✱→○→✱→✱→✱→○	Slow LED flashing pattern (2 seconds on and 2 seconds off) ●→○→●→○→●→○	R32 Sensor Communication Fault (Check R32 Sensor connection and Cycle Power - Replace R32 sensor if error continues)
LED will flash 4 times and then be off for 5 seconds before repeating the pattern ✱→✱→✱→✱→○→✱→✱→✱→✱→○	Slow LED flashing pattern (2 seconds on and 2 seconds off) ●→○→●→○→●→○	R32 Sensor Fault (Check R32 Sensor connection and Cycle Power - Replace R32 sensor if error continues)
LEAK DETECTION SYSTEM INSTALLED. UNIT MUST BE POWERED EXCEPT FOR SERVICE. *IF R32 LEAK ALARM IS OBSERVED, DO NOT OPEN THE UNIT OR TURN IT OFF		

SERVICING

Multi-Position Air Handler Instruction to replace R-32 PCB and R-32 Sensor:
Take off the blower access panel, disconnect the PCB harness and R-32 sensor wire connected to the PCB, detach the non-functioning PCB from the 4 plastic standoffs, install new PCB on 4 plastic standoffs which is installed on metal bracket, re-connect the PCB harness and R-32 sensor wire to the new PCB per wiring instruction as attached to the equipment, reassemble the blower access panel to the unit.

Instruction to replace R-32 sensor:
Take off the blower access panel and coil access panel, take off the drain port gasket on the drain pan in front of the sensor bracket, disconnect the R-32 sensor wire from the R-32 PCB, take off sensor bracket assembly from the drain pan, remove plastic push pins and non-functioning R-32 sensor off the sensor bracket, install new R-32 sensor and plastic push pins to sensor bracket, re-install R-32 sensor bracket assembly to the drain port correctly as shown in the figures in the Installation Manual. The “FRONT” print on sensor bracket should be facing away from the equipment, place gaskets back to the drain ports correctly. The “FRONT” print on the gaskets should be in the front facing away from the equipment, reassemble the blower access panel and coil access panel to the unit.

IMPORTANT NOTE: The R-32 Sensor shall only be replaced with sensors specified by the appliance manufacturer.

Ceiling Mount Air handler Instructions to Replace R-32 PCB and R-32 Sensor

IMPORTANT NOTE: Do not use sharp objects to remove R-32 PCB as it may damage the components of the R-32 PCB.

R-32 Sensor Mounting and Dismounting Instructions
R-32 Sensor Dismounting Instructions
1. Detach the service panel by unfastening screw “A” (Refer to figure A).
2. Detach the return panel by unfastening screw “B” (Refer to figure A).
3. Remove the PCB Box Upper case (Refer to figure C).
4. Remove the Sensor Wire Connection from the PCB (Refer to figure D).
5. Unfasten screw “D” from the left panel (Refer to figure D).
6. Remove the sensor bracket assembly from the unit.
7. Detach the sensor from the sensor bracket assembly by unfastening screw “E” (Refer to figure E).

R-32 Sensor Mounting Instructions
1. Mount the sensor to the sensor bracket by placing the sensor as shown in figure E and fastening the screw “E”.
2. Place the sensor bracket assembly inside the unit such that hole to mount screw “D” on the left panel aligns with the hole on the sensor bracket assembly. Then, fasten screw “D” (Refer to figure B).
3. Place the sensor wire connection on the PCB (Refer to figure D) and close the PCB box by mounting the upper case to the lower case (Refer to figure C).
4. Mount the return panel back to its original location and fasten screw “B” (Refer to figure A).
5. Mount the service panel back to its original location and fasten screw “A” (Refer to figure A).

R-32 PCB Mounting and Dismounting Instructions
R-32 PCB Dismounting Instructions
1. Detach the service panel by unfastening screw “A” (Refer to figure A).
2. Detach the return panel by unfastening screw “B” (Refer to figure A).
3. Remove the PCB Box Upper case (Refer to figure C).
4. Remove the Sensor Wire Connection and the PCB Wire Harness from the PCB (Refer to figure D).
5. Remove the PCB from the PCB Box carefully by pulling the PCB out.

R-32 PCB Mounting Instructions
1. Mount the PCB in the PCB Box by aligning the holes of PCB on the PCB Box protrusions. Press on it until you hear a click sound where the clips automatically lock the PCB in place.
2. Add the Sensor Wire Connection and the PCB Wire Harness to the PCB (Refer to figure D).
3. Close the PCB box by mounting the upper case to the lower case (Refer to figure C).
4. Mount the return panel back to its original location and fasten screw “B” (Refer to figure A).

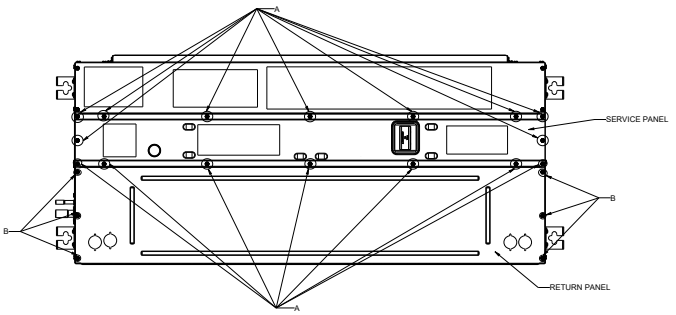

Figure A

SERVICING

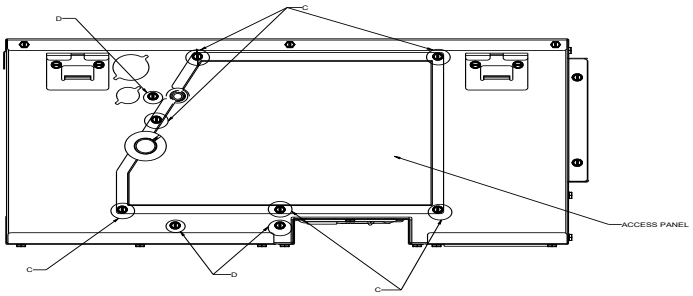

Figure B

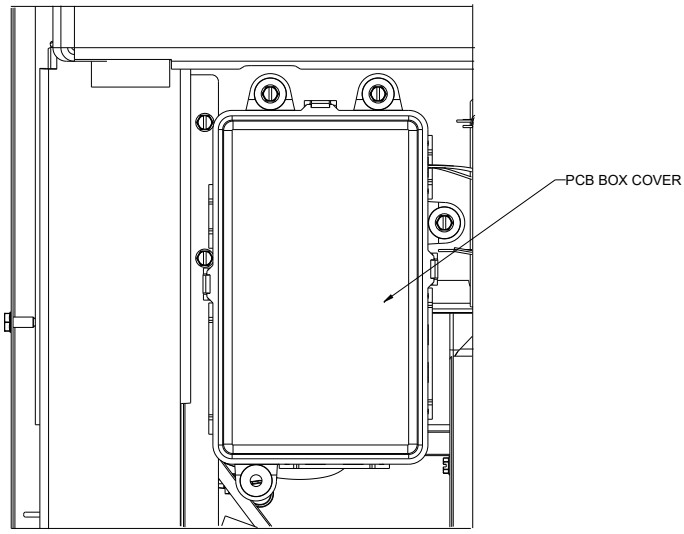

Figure C

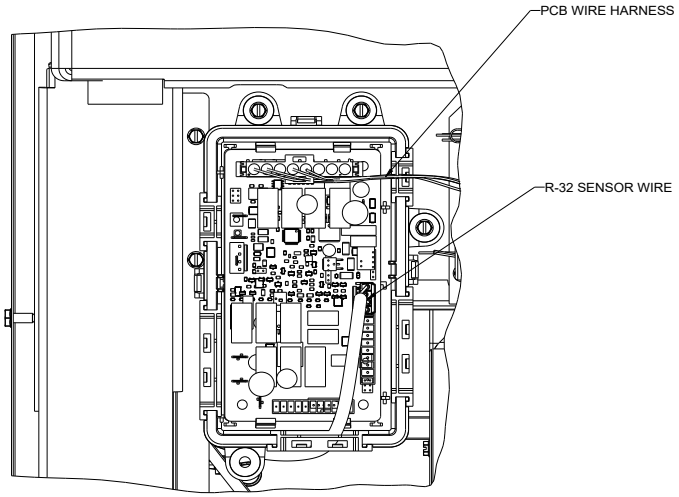

Figure D

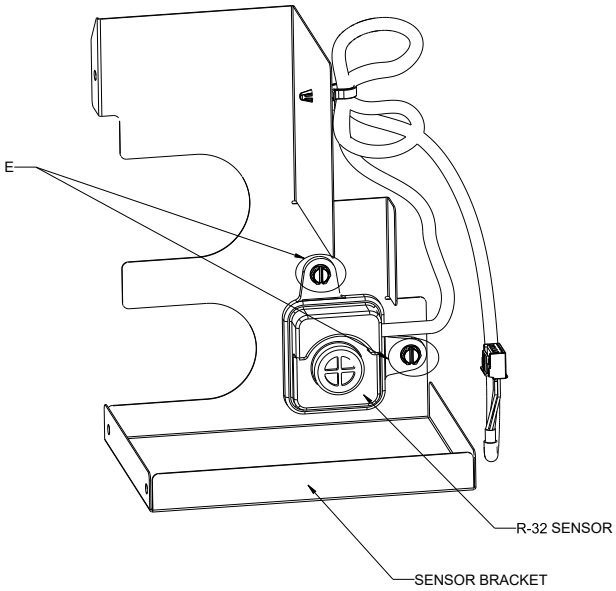

Figure E

Checking High Efficiency Motors

The motor is a one piece, fully encapsulated, 3 phase brushless DC (single phase AC input) motor with ball bearing construction.

1. Using a voltmeter, check for 230 volts to the motor connections L and N. If 230 volts is present, proceed to step 2. If 230 volts is not present, check the line voltage circuit to the motor.
2. Using a voltmeter, check for 24 volts from terminal C to either terminal 1, 2, 3, 4, or 5, depending on which tap is being used, at the motor. If voltage is present, proceed to step 3. If no voltage, check 24 volt circuit to motor.
3. If voltage was present in steps 1 and 2, the motor has failed and will need to be replaced.

NOTE: When replacing motor, ensure the belly band is between the vents on the motor and the wiring has the proper drip loop to prevent condensate from entering the motor.

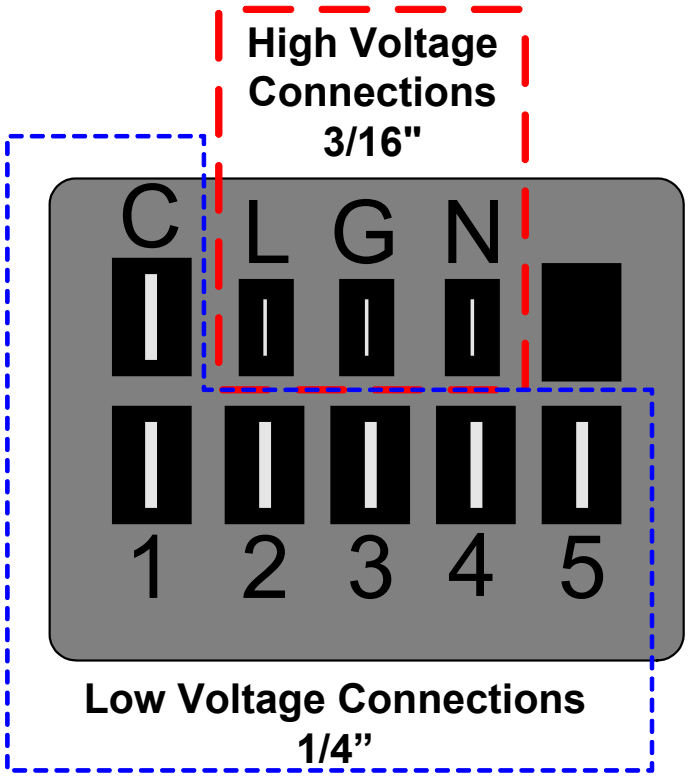

Motor Connections

4. Troubleshooting Procedure

This procedure must be followed in sequence. Skipping steps may result in incorrect diagnosis.

STEP 1 – Verify Line Voltage to ECM Motor

Measure between terminal L and terminal N at the motor’s line-voltage connector. (Figure 1.)

- **If 230V ±10% is present:**
  → Proceed to Step 2
- **If 230V is NOT present:**
  → Inspect line-voltage circuit for loose connections, open breakers, or miswiring
  → **Correct the issue and re-test**
  → Do not replace motor or relay.

Figure 1

STEP 2 – Verify 24V Control Voltage to Active Speed Tap

Measure between terminal C and the active speed terminal 1–5. (Figure 2.)

- **If 24V is present:**
  → ECM is receiving proper control signal
  → Proceed to Step 5
- **If 24V is NOT present: (AMST**1300AA)**
  → Control voltage is not reaching the motor
  → Proceed to Step 3
- **If AMST**1300BA go to Step 4.**

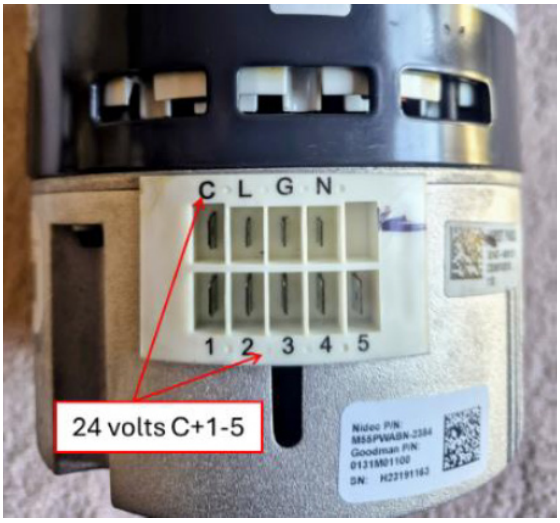

Figure 2

STEP 3 – Verify Relay Coil Voltage #0130M00908 (AMST1300AA)**

Measure between relay coil terminals #1 and #0.

- **If 24V is present:**
  Relay is being commanded ON
  → Proceed to Step 4

SERVICING

- **If 24V is NOT present:**
  → Verify:
  o Thermostat is calling correctly.
  o Transformer outputs 24V between R and C
  → Correct issues found
  → If thermostat and transformer are functioning and coil still never energizes:
  Do NOT replace the relay or motor – the issue is in controls.

STEP 4 – Verify Relay Output to Motor Speed Tap
Measure between transformer C and the relay's purple output lead (24-V output to motor).

- **If 24V is present:**
  → Relay output is normal
  → Proceed to Step 5
- **If 24V is NOT present:**
  → Relay is not passing the 24-V control signal
  → **Replace the relay**
  → After replacement, return to Step 2 to confirm proper operation.

STEP 5 – Final Motor Determination
This step is reached ONLY after verifying:

- 230-V line power is present (Step 1)
- Correct 24-V control voltage is reaching the motor (Steps 2–4)

If motor has:

- Correct 230V
- Correct 24V signal
- **Correct relay output**
  But does not run.
  Motor has failed — Replace the ECM motor.

5. Relocation (AMST1300AA Only)**
Reason: Prevent condensation from dripping onto relay, causing corrosion and intermittent 24-V signal failures.
Procedure

1. **Disconnect power** to the air handler.
2. Label and remove all wires from relay P/N 0130M00908.
3. Remove existing relay.
4. If installed on the original PCB plate, remove relay and bracket shown in **(Figure 3.)**
5. Mount relay on the **blower deck behind the low-voltage terminal strip (Figure 4).**
   o Ensure relay is mounted upright, with terminals facing upward.
   o Maintain minimum 1 in. clearance from blower wheel and wiring harness.
6. Reconnect all wires to identical terminal designations.
7. Restore power.
8. Initiate call for fan (G) and verify proper blower operation.

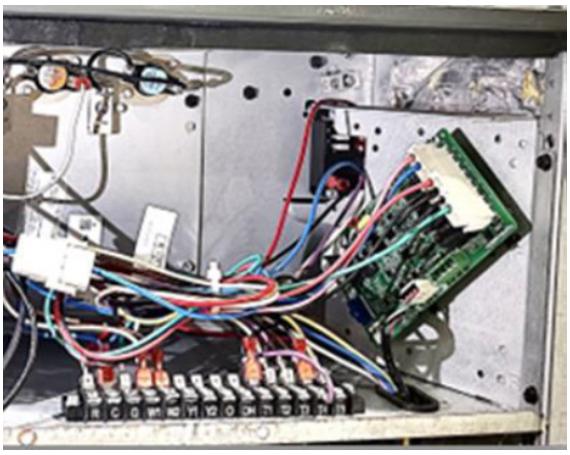

Figure 3

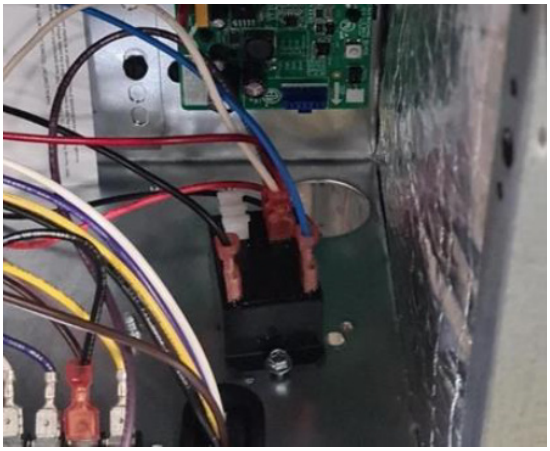

Figure 4

SERVICING

EEM Blower Replacement

For New AWST/AWSF R-32 Air Handlers.

1. Disconnect power at main electrical panel.
2. Remove front access panel.
3. Remove the two screws on each side holding the lower control box and move out of the way to give access to the blower assembly

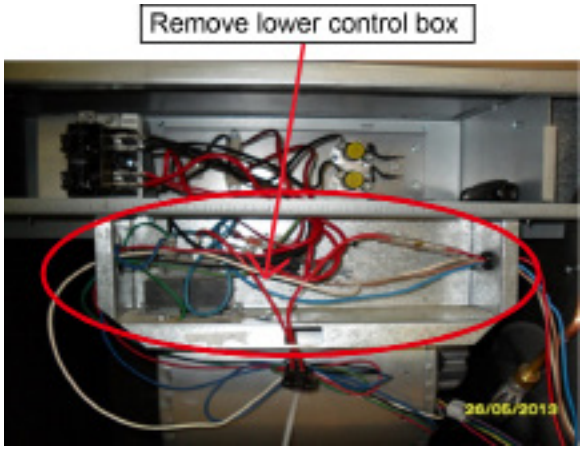

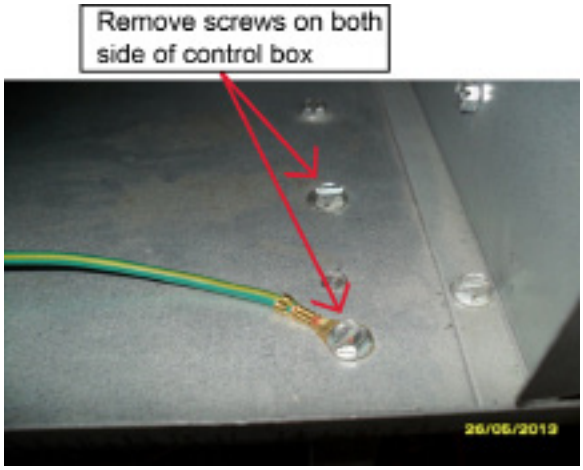

4. Loosen or remove set screw on blower wheel hub and ensure the wheel slides freely on the shaft of the motor.

5. Install cardboard or rug over coil to protect fins from damage.

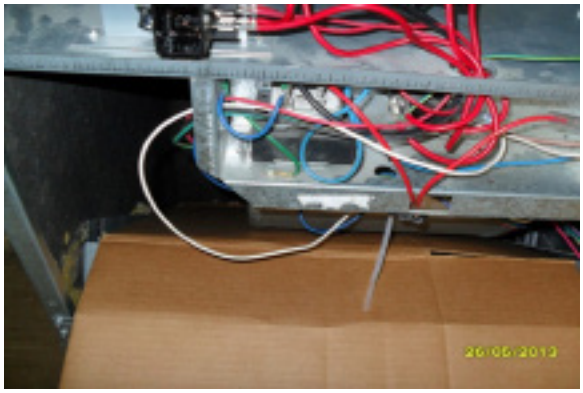

6. Remove the three ⅜" screws holding the blower in place.

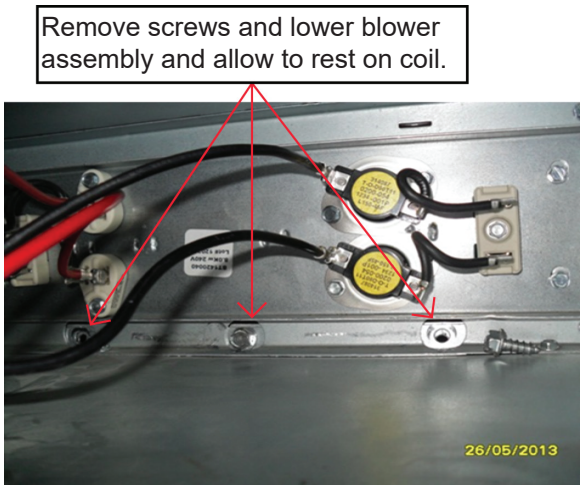

7. Lower blower onto coil.
8. Slide blower assembly all the way to the left side of cabinet.

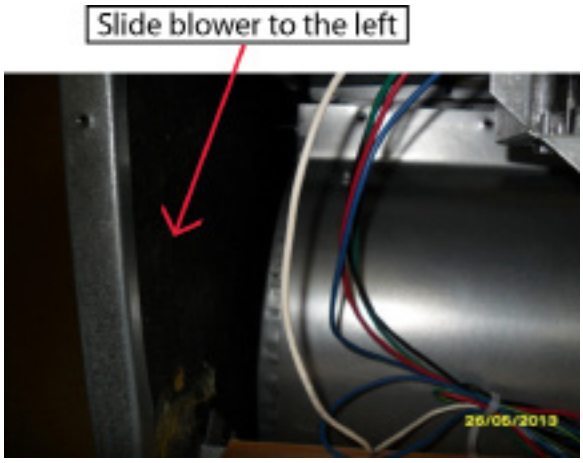

9. Remove the bolts holding the motor bracket to the blower and slide out of blower shell.

SERVICING

10. Replace the motor and reinstall blower and control box.
11. Reconnect power and test operation.

Checking Compressor

WARNING

HERMETIC COMPRESSOR ELECTRICAL TERMINAL VENTING CAN BE DANGEROUS. WHEN INSULATING MATERIAL WHICH SUPPORTS A HERMETIC COMPRESSOR OR ELECTRICAL TERMINAL SUDDENLY DISINTEGRATES DUE TO PHYSICAL ABUSE OR AS A RESULT OF AN ELECTRICAL SHORT BETWEEN THE TERMINAL AND THE COMPRESSOR HOUSING, THE TERMINAL MAY BE EXPELLED, VENTING THE VAPOR AND LIQUID CONTENTS OF THE COMPRESSOR HOUSING AND SYSTEM.

If the compressor terminal PROTECTIVE COVER and gasket (if required) are not properly in place and secured, there is a remote possibility if a terminal vents, that the vaporous and liquid discharge can be ignited, spouting flames several feet, causing potentially severe or fatal injury to anyone in its path.

This discharge can be ignited external to the compressor if the terminal cover is not properly in place and if the discharge impinges on a sufficient heat source.

Ignition of the discharge can also occur at the venting terminal or inside the compressor, if there is sufficient contaminant air present in the system and an electrical arc occurs as the terminal vents.

Ignition cannot occur at the venting terminal without the presence of contaminant air, and cannot occur externally from the venting terminal without the presence of an external ignition source.

Therefore, proper evacuation of a hermetic system is essential at the time of manufacture and during servicing.

To reduce the possibility of external ignition, all open flame, electrical power, and other heat sources should be extinguished or turned off prior to servicing a system.

Resistance Test

Each compressor is equipped with an internal overload.

The line break internal overload senses both motor amperage and winding temperature. High motor temperature or amperage heats the disc causing it to open, breaking the common circuit within the compressor on single phase units.

Heat generated within the compressor shell, usually due to recycling of the motor, high amperage or insufficient gas to cool the motor, is slow to dissipate. Allow at least three to four hours for it to cool and reset, then retest.

If fuse, circuit breaker, ground fault protective device, etc. has not tripped - proceed with step 1 below. If any of the devices have tripped, proceed to Ground Test.

WARNING

HIGH VOLTAGE!
DISCONNECT ALL POWER BEFORE SERVICING OR INSTALLING. MULTIPLE POWER SOURCES MAY BE PRESENT. FAILURE TO DO SO MAY CAUSE PROPERTY DAMAGE, PERSONAL INJURY OR DEATH.

1. Remove the leads from the compressor terminals.
2. Using an ohmmeter, test continuity between terminals S-R, C-R, and C-S, on single phase units or terminals T2, T2 and T3, on 3 phase units.

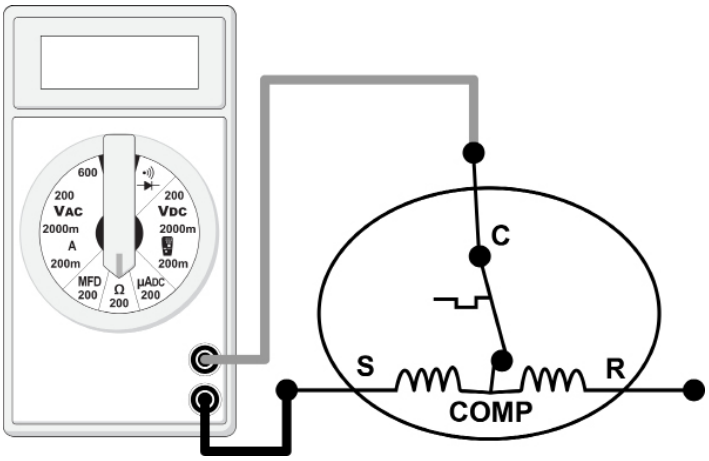

Testing Compressor Windings

If either winding does not test continuous, replace the compressor.

NOTE: If an open compressor is indicated, allow ample time for the internal overload to reset before replacing compressor.

SERVICING

Ground Test

If fuse, circuit breaker, ground fault protective device, etc., has tripped, this is a strong indication that an electrical problem exists and must be found and corrected. The circuit protective device rating must be checked, and its maximum rating should coincide with that marked on the equipment nameplate.

With the terminal protective cover in place, it is acceptable to replace the fuse or reset the circuit breaker ONE TIME ONLY to see if it was just a nuisance opening. If it opens again, DO NOT continue to reset.

Disconnect all power to unit, making sure that **all** power phases are open.

1. DO NOT remove protective terminal cover. Disconnect the three leads going to the compressor terminals at the nearest point to the compressor.
2. Identify the leads and using an ohmmeter on the R x 10,000 scale or the highest resistance scale on your ohmmeter check the resistance between each of the three leads separately to ground (such as an unpainted tube on the compressor).
3. If a ground is indicated, then carefully remove the compressor terminal protective cover and inspect for loose leads or insulation breaks in the lead wires.
4. If no visual problem is indicated, carefully remove the leads at the compressor terminals.
5. Carefully retest for ground, directly between compressor terminals and ground.
6. If ground is indicated, replace the compressor. The resistance reading should be infinity. If there is any reading on meter, there is some continuity to ground and compressor should be considered defective.

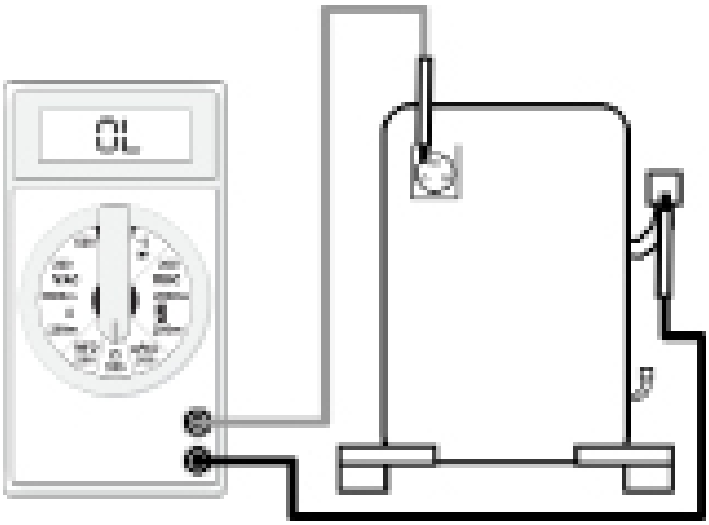

Compressor Ground Test

WARNING

Damage can occur to the glass embedded terminals if the leads are not properly removed. This can result in terminal and hot oil discharging.

Unloader Test Procedure (2 Stage Compressors Only)

A nominal 24-volt direct current coil activates the compressor internal unloader solenoid. The input control circuit voltage must be 18 to 28 volt ac. The coil power requirement is 5 VA. The external electrical connection is made with a molded plug assembly. This plug contains a full wave rectifier to supply direct current to the unloader coil. The measured DC voltage at the connectors in the plug should be 15 to 27 volt dc.

Unloader Test Procedure

If it is suspected that the unloader is not working, the following methods may be used to verify operation.

1. Operate the system and measure compressor amperage. Cycle the unloader ON and OFF at 10 second intervals. The compressor amperage should increase when switching from part-load to full-load and decrease when switching from full-load to part-load. The percent change depends on the operating conditions and voltage, but should be at least 25 percent.
2. If step one does not give the expected results, shut unit off. Apply 18 to 28 volt ac to the unloader molded plug leads and listen for a click as the solenoid pulls in. Remove power and listen for another click as the unloader returns to its original position.
3. If clicks can't be heard, shut off power to the unit and remove the control circuit molded plug from the compressor and measure the unloader coil resistance (connections on the compressor). The solenoid coil should have continuity and not be grounded or have infinite resistance. If the coil resistance is infinite, zero, or grounded, the compressor must be replaced.
4. Next check the molded plug.
   a. Voltage check: Apply control voltage to the plug wires (18 to 28 volt ac). The measured dc voltage at the female connectors in the plug should be around 15 to 27 vdc.
   b. Resistance check: Measure the resistance from the end of one molded plug lead to either of the two female connectors in the plug. One of the connectors should read close to zero ohms while the other should read infinity. Repeat with other wire. The same female connector as before should read zero while the other connector again reads infinity. Reverse polarity on the ohmmeter leads and repeat. The female connector that read infinity previously should now read close to zero ohms.

SERVICING

Replace plug if either of these test methods doesn't show the desired results.

Operation Test

If the voltage, capacitor, overload and motor winding test fail to show the cause for failure:

WARNING

High Voltage!
Disconnect all power before servicing or installing. Multiple power sources may be present. Failure to do so may cause property damage, personal injury or death.

1. Remove unit wiring from disconnect switch and wire a test cord to the disconnect switch.

NOTE: The wire size of the test cord must equal the line wire size and the fuse must be of the proper size and type.

2. With the protective terminal cover in place, use the three leads to the compressor terminals that were disconnected at the nearest point to the compressor and connect the common, start and run clips to the respective leads.
3. Connect good capacitors of the right MFD and voltage rating into the circuit as shown.
4. With power ON, close the switch.

WARNING

Line voltage now present.

- If the compressor starts and continues to run, the cause for failure is somewhere else in the system.
- If the compressor fails to start - replace.

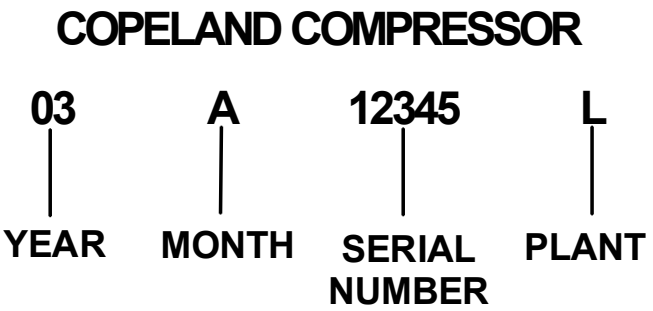

Testing Crankcase Heater

(Optional Item)

The crankcase heater must be energized a minimum of four (4) hours before the condensing unit is operated. Crankcase heaters are used to prevent migration or accumulation of refrigerant in the compressor crankcase during the off cycles and prevents liquid slugging or oil pumping on start up.

A crankcase heater will not prevent compressor damage due to a floodback or over charge condition.

WARNING

Disconnect ALL power before servicing.

1. Disconnect the heater lead in wires.
2. Using an ohmmeter, check heater continuity - should test continuous. If not, replace.

NOTE: The positive temperature coefficient crankcase heater is a 40 watt 230 voltage heater. The cool resistance of the heater will be approximately 1800 ohms. The resistance will become greater as the temperature of the compressor shell increases.

Checking Reversing Valve and Solenoid

Reversing valve used in heat pumps could potentially leak internally. Discharge gases can leak into the suction inside the valve. Compound gages will give the same symptoms as bad compressor valves or broken scroll flanks. The temperature between true suction and the suction line after the valve should not be greater than 4 degrees. Note: The center tube is always the suction line and should be cold.

SERVICING

Troubleshooting the Reversing Valve for Electrical Failure

1. Place unit into the cooling mode. Test for 24 volts at the solenoid. If there is no voltage present at coil, check the control voltage.
2. If voltage is present, loosen the nut on the top of the coil. Remove the coil, there should be slight resistance.
3. If the slight resistance is felt, remove the coil. As you remove the coil listen carefully, an audible click should be detected. The clicking is due to the movement of the pilot valve plunger. The absence of a clicking sound indicates the plunger is stuck.

Troubleshooting Mechanical Failures on a Reversing Valve by Pressure

1. Troubleshooting the reversing valve can be done by pressure and touch.
2. Raise the head pressure. In the cooling mode block the fan exhaust. Once head pressure has been raised, cycle between cooling and heating and see if the piston can be freed.

Troubleshooting Mechanical Failures on a Reversing Valve by Temperature

1. When operating properly the valve contains refrigerant gases at certain temperatures.
2. The discharge line should be the same temperature after the valves discharge line.
3. The true suction should be the same as the suction line after the valve. If there is a 4-degree difference, valve is leaking

When stuck in the mid-position, part of the discharge gas from the compressor is directed back to the suction side, resulting in excessively high suction pressure. An increase in the suction line temperature through the reversing valve can also be measured. Check operation of the valve by starting the system and switching the operation from COOLING to HEATING cycle.

If the valve fails to change its position, test the voltage (24V) at the valve coil terminals, while the system is on the COOLING cycle.

All heat pumps and communicating heat pumps wired in legacy - If no voltage is registered at the coil terminals, check the operation of the thermostat and the continuity of the connecting wiring from the “O” terminal of the thermostat to the unit.

If voltage is registered at the coil, tap the valve body lightly while switching the system from HEATING to COOLING, etc. If this fails to cause the valve to switch positions, remove the coil connector cap and test the continuity of the reversing valve solenoid coil. If the coil does not test continuous - replace it.

If the coil test continuous and 24 volts is present at the coil terminals, the valve is inoperative - replace it.

Testing Defrost Control

To check the defrost control for proper sequencing, proceed as follows: With power ON; unit not running.

1. Jumper defrost thermostat by placing a jumper wire across the terminals “DFT” and “R”/”R-DFT” at defrost control board.
2. Remove jumper from timer pins and jump across test pins on defrost control board. NOTE: Do not use screwdriver or field supplied jumper to test the control.
3. Set thermostat to call for heating. System should go into defrost within 21 seconds
4. Immediately remove jumper from test pins.
5. Using VOM check for voltage across terminals “C & O”. Meter should read 24 volts.
6. Using VOM check for voltage across fan terminals DF1 and DF2 on the board. You should read line voltage (208-230 VAC) indicating the relay is open in the defrost mode.
7. Using VOM check for voltage across “W”/”W2” & “C” terminals on the board. You should read 24 volts.
8. If not as above, replace control board.
9. Set thermostat to off position and disconnect power. Remove jumper from defrost thermostat and replace timer jumper to the desired defrost time.

NOTE: Remove jumper across defrost thermostat before returning system to service.

Testing Defrost Thermostat

1. Install a thermocouple type temperature test lead on the tube adjacent to the defrost control. Insulate the lead point of contact.
2. Check the temperature at which the control closes its contacts by lowering the temperature of the control. Part # 0130M00009P which is used on 2 and 2.5 ton units should close at 34°F ± 5°F. Part # 0130M00001P or B1370803 which is used on 3 thru 5 ton units should close at 31°F ± 3°F.
3. Check the temperature at which the control closes its contacts by lowering the temperature of the control. Part # 0130M00085, which is used on units with 5 mm coils, should close at 30°F ± 5°F.

4. Check the temperature at which the control opens its contacts by raising the temperature of the control. Part #0130M00009P which is used on 2 and 2.5 ton units should open at 60°F ± 5°F. Part # 0130M00001P or B1370803 which is used on 3 thru 5 ton units should open at 75°F ± 6°F.
5. Check the temperature at which the control opens its contacts by raising the temperature of the control. Part # 0130M00085, which is used on units with 5 mm coils, should open at 60°F ± 5°F.
6. If not as above, replace control.

WARNING

DISCONNECT ALL POWER BEFORE SERVICING.

Checking Heater Elements

Optional electric heaters may be added, in the quantities shown in the spec sheet for each model unit, to provide electric resistance heating. Under no condition shall more heaters than the quantity shown be installed.

WARNING

HIGH VOLTAGE!
DISCONNECT ALL POWER BEFORE SERVICING OR INSTALLING. MULTIPLE POWER SOURCES MAY BE PRESENT. FAILURE TO DO SO MAY CAUSE PROPERTY DAMAGE, PERSONAL INJURY OR DEATH.

1. Disassemble and remove the heating element(s).
2. Visually inspect the heater assembly for any breaks in the wire or broken insulators.
3. Using an ohmmeter, test the element for continuity - no reading indicates the element is open. Replace as necessary.

Electric Heater (Optional Item)

Optional electric heaters may be added, in the quantities shown in the specifications section, to provide electric resistance heating. Under no condition shall more heaters than the quantity shown be installed.

The low voltage circuit in the air handler is factory wired and terminates at the location provided for the electric heater(s).

The system CFM can be determined by measuring the static pressure external to the unit. The installation manual supplied with the blower coil, or the blower performance table in the service manual, shows the CFM for the static measured.

Alternately, the system CFM can be determined by operating the electric heaters and indoor blower WITHOUT having the compressor in operation. Measure the temperature rise as close to the blower inlet and outlet as possible.

If other than a 240V power supply is used, refer to the **BTUH CAPACITY CORRECTION FACTOR** chart below.

BTUH CAPACITY CORRECTION FACTOR				
SUPPLY VOLTAGE	250	230	220	208
MULTIPLICATION FACTOR	1.08	.92	.84	.75

EXAMPLE: Five (5) heaters provide 24.0 KW at the rated 240V. Our actual measured voltage is 220V, and our measured temperature rise is 42°F. Find the actual CFM:

Answer: 24.0KW, 42°F Rise, 240 V = 1800 CFM from the **TEMPERATURE RISE** chart on the right.

Heating output at 220 V = 24.0KW x 3.413 x .84 = 68.8 MBH.

Actual CFM = 1800 x .84 Corr. Factor = 1400 CFM.

NOTE: The temperature rise table is for sea level installations. The temperature rise at a particular KW and CFM will be greater at high altitudes, while the external static pressure at a particular CFM will be less.

TEMPERATURE RISE (°F) @ 240V								
CFM	3.0 kW	4.8 kW	7.2 kW	9.6 kW	14.4 kW	19.2 kW	24.0 kW	28.8 kW
600	16	25	38	51	-	-	-	-
700	14	22	33	43	-	-	-	-
800	12	19	29	38	57	-	-	-
900	11	17	26	34	51	-	-	-
1000	10	15	23	30	46	-	-	-
1100	9	14	21	27	41	55	-	-
1200	8	13	19	25	38	50	-	-
1300	7	12	18	23	35	46	-	-
1400	7	11	16	22	32	43	54	65
1500	6	10	15	20	30	40	50	60
1600	6	9	14	19	28	38	47	57
1700	6	9	14	18	27	36	44	53
1800	5	8	13	17	25	34	42	50
1900	5	8	12	16	24	32	40	48
2000	5	8	12	15	23	30	38	45
2100	5	7	11	14	22	29	36	43
2200	4	7	11	14	21	27	34	41
2300	4	7	10	13	20	26	33	39

SERVICING

ELECTRIC HEATER CAPACITY BTUH								
HTR KW	3.0 KW	4.7 KW	6.0 KW	7.0 KW	9.5 KW	14.2 KW	19.5 KW	21.0 KW
BTUH	10200	16200	20400	23800	32400	48600	66500	71600

FORMULAS:
Heating Output = KW x 3413 x Corr. Factor

Actual CFM = CFM (from table) x Corr. Factor

BTUH = KW x 3413

BTUH = CFM x 1.08 x Temperature Rise (T)

$$CFM = \frac{KW \times 3413}{1.08 \times T}$$

$$T = \frac{BTUH}{CFM \times 1.08}$$

Checking Heater Limit Control(s)

Each individual heater element is protected with a limit control device connected in series with each element to prevent overheating of components in case of low airflow. This limit control will open its circuit at approximately 150°F.

WARNING

High Voltage!
Disconnect all power before servicing or installing. Multiple power sources may be present. Failure to do so may cause property damage, personal injury or death.

1. Remove the wiring from the control terminals.
2. Using an ohmmeter, test for continuity across the normally closed contacts. No reading indicates the control is open - replace if necessary.

If Found Open - Replace - Do Not Wire Around.

Checking Heater Fuse Link
(Optional Electric Heaters)

Each individual heater element is protected with a one time fuse link which is connected in series with the element. The fuse link will open at approximately 333°.

WARNING

Disconnect ALL power before servicing.

1. Remove heater element assembly so as to expose fuse link.
2. Using an ohmmeter, test across the fuse link for continuity - no reading indicates the link is open. Replace as necessary.

NOTE: The link is designed to open at approximately 333°F. DO NOT WIRE AROUND - determine reason for failure.

Refrigeration Repair Practice

DANGER

Always remove the refrigerant charge in a proper manner before applying heat to the system.

When repairing the refrigeration system:

WARNING

High Voltage!
Disconnect all power before servicing or installing. Multiple power sources may be present. Failure to do so may cause property damage, personal injury or death.

1. Never open a system that is under vacuum. Air and moisture will be drawn in.
2. Plug or cap all openings.
3. Remove all burrs and clean the brazing surfaces of the tubing with sand cloth or paper. Brazing materials do not flow well on oxidized or oily surfaces.
4. Clean the inside of all new tubing to remove oils and pipe chips.
5. When brazing, sweep the tubing with dry nitrogen to prevent the formation of oxides on the inside surfaces.
6. Complete any repair by replacing the liquid line drier in the system, evacuate and charge.

Brazing Materials

IMPORTANT NOTE: Torch heat required to braze tubes of various sizes is proportional to the size of the tube. Tubes of smaller size require less heat to bring the tube to brazing temperature before adding brazing alloy. Applying too much heat to any tube can melt the tube. Service personnel must use the appropriate heat level for the size of the tube being brazed.

NOTE: The use of a heat shield when brazing is recommended to avoid burning the serial plate or the finish on the unit. Heat trap or wet rags should be used to protect heat sensitive components such as service valves and TXV valves.

SERVICING

Copper to Copper Joints - Sil-Fos used without flux (alloy of 15% silver, 80% copper, and 5% phosphorous). Recommended heat 1400°F.

Copper to Steel Joints - Silver Solder used without a flux (alloy of 30% silver, 38% copper, 32% zinc). Recommended heat - 1200°F.

WARNING

TO AVOID THE RISK OF FIRE OR EXPLOSION, NEVER USE OXYGEN, HIGH PRESSURE AIR OR FLAMMABLE GASES FOR LEAK TESTING OF A REFRIGERATION SYSTEM.

WARNING

TO AVOID POSSIBLE EXPLOSION, THE LINE FROM THE NITROGEN CYLINDER MUST INCLUDE A PRESSURE REGULATOR AND A PRESSURE RELIEF VALVE. THE PRESSURE RELIEF VALVE MUST BE SET TO OPEN AT NO MORE THAN 460 PSIG.

Standing Pressure Test (Recommended before vacuum)

Using dry nitrogen or dry helium, pressurize the system to 460 PSIG. Allow the pressure to stabilize and hold for at least 15 minutes. The system is considered leak-free if the pressure does not drop below 460 PSIG. If, after 15 minutes, the pressure drops below 460 PSIG, it implies a leak in the system. Proceed with identifying and sealing the leak and repeating the Standing Pressure Test. Proceed to system evacuation using the Deep Vacuum Method. Leak test the system using dry nitrogen or dry helium and soapy water to identify leaks. NO REFRIGERANT SHALL BE USED FOR PRESSURE TESTING TO DETECT LEAKS. Proceed to system evacuation using the Deep Vacuum Method.

System Evacuation

Condensing unit liquid and suction valves are closed to contain the charge within the unit. The unit is shipped with the valve stems closed and caps installed. Do not open valves until the system is evacuated.

WARNING

REFRIGERANT UNDER PRESSURE!
FAILURE TO FOLLOW PROPER PROCEDURES MAY CAUSE PROPERTY DAMAGE, PERSONAL INJURY OR DEATH.

NOTE: Scroll compressors should never be used to evacuate or pump down a heat pump or air conditioning system.

CAUTION

PROLONGED OPERATION AT SUCTION PRESSURES LESS THAN 20 PSIG FOR MORE THAN 5 SECONDS WILL RESULT IN OVERHEATING OF THE SCROLLS AND PERMANENT DAMAGE TO THE SCROLL TIPS, DRIVE BEARINGS AND INTERNAL SEAL.

Deep Vacuum Method (Recommended)

The Deep Vacuum Method requires a vacuum pump rated for 500 microns or less. This method is an effective and efficient way of assuring the system is free of non-condensable air and moisture. As an alternative, the Triple Evacuation Method is detailed in the Service Manual for this product model.

It is recommended to remove the Schrader Cores from the service valves using a core-removal tool to expedite the evacuation procedure.

1. Connect the vacuum pump, micron gauge, and vacuum rated hoses to both service valves. Evacuation must use both service valves to eliminate system mechanical seals.
2. Evacuate the system to 500 microns or less using suction and liquid service valves. Using both valves is necessary as some compressors create a mechanical seal separating the sides of the system.
3. Close pump valve and hold vacuum for 10 minutes. Typically, pressure will rise during this period. If the pressure rises to 1000 microns or less and remains steady the system is considered leak-free; proceed to startup.
4. If pressure rises above 1000 microns but holds steady below 2000 microns, moisture and/or non-condensable may be present or the system may have a small leak. Return to step 2: If the same result is encountered check for leaks as previously indicated and repair as necessary then repeat evacuation.
5. If pressure rises above 2000 microns, a leak is present. Check for leaks as previously indicated and repair as necessary then repeat evacuation.

SERVICING

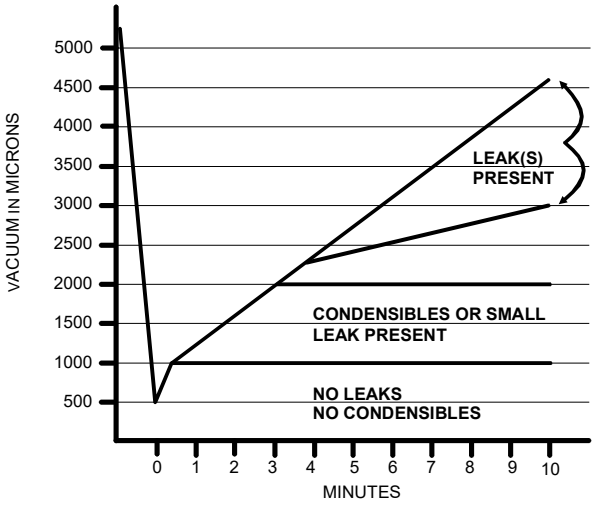

Triple Evacuation Method (Alternate)

1. Evacuate the system to 4000 microns and hold for 15 minutes. Break the vacuum with dry nitrogen, bring the system pressure to 2-3 PSIG and hold for 20 minutes. Release the nitrogen.
2. Evacuate to 1500 microns and hold for 20 minutes. Break the vacuum with dry nitrogen again, bring the system pressure back to 2-3 PSIG and hold for 20 minutes.
3. Evacuate the system to 500 microns and hold for 60 minutes.
4. If the pressure rises to 1000 microns or less and remains steady the system is considered leak free; proceed to start-up.

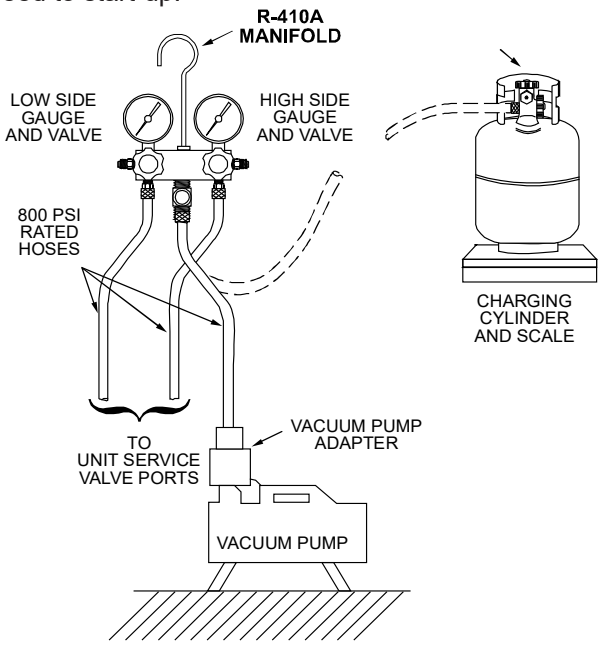

Charging

WARNING

REFRIGERANT UNDER PRESSURE!
- **Do not overcharge system with refrigerant.**
- **Do not operate unit in a vacuum or at negative pressure.**

Failure to follow proper procedures may cause property damage, personal injury or death.

CAUTION

Use refrigerant certified to AHRI standards. Used refrigerant may cause compressor damage and is not covered under the warranty. Most portable machines cannot clean used refrigerant to meet AHRI standards.

CAUTION

Damage to the unit caused by operating the compressor with the suction valve closed is not covered under the warranty and may cause serious compressor damage.

Charge the system with the exact amount of refrigerant. Refer to the specification section or check the unit nameplates for the correct refrigerant charge. An inaccurately charged system will cause future problems.

NOTE: Power must be supplied to the 18 SEER outdoor units containing ECM motors before the power is applied to the indoor unit. Sending a low voltage signal without high voltage power present at the outdoor unit can cause malfunction of the control module on the ECM motor.

Adequate refrigerant charge for the matching evaporator coil or air handler and 15 feet of line set is supplied with the condensing unit. If using evaporator coils or air handlers other than HSVTC coil it may be necessary to add or remove refrigerant to attain proper charge. If line set exceeds 15 feet in length, refrigerant should be added at .6 ounces per foot of liquid line.

NOTE: The outdoor temperature should be 60°F or higher when charging the unit. Charge should always be checked using subcooling when using TXV equipped indoor coil to verify proper charge.

When opening valves with retainers, open each valve only until the top of the stem is ⅛” from the retainer. To avoid loss of refrigerant, DO NOT apply pressure to the retainer. When opening valves without a retainer remove service valve cap and insert a hex wrench into the valve stem and back out the stem by turning the hex wrench counterclockwise. Open the valve until it contacts the rolled lip of the valve body.

SERVICING

NOTE: These are not back-seating valves. It is not necessary to force the stem tightly against the rolled lip.

Break vacuum by fully opening liquid service valve.

After the refrigerant charge has bled into the system, open the suction service valve. The service valve cap is the secondary seal for the valves and must be properly tightened to prevent leaks. Make sure cap is clean and apply refrigerant oil to threads and sealing surface on inside of cap. Tighten cap finger-tight and then tighten additional ⅙ of a turn (1 wrench flat), or to the following specification, to properly seat the sealing surfaces.

Adequate refrigerant charge for the matching AHRI rated designated tested combination (DTC) evaporator coil and 15 feet of lineset is supplied with the condensing unit. If using evaporator coils other than DTC coil, it may be necessary to add or remove refrigerant to attain proper charge. If line set exceeds 15 feet in length, refrigerant should be added at the amount specified in the below table based on suction and liquid tube diameters.

Initial Charge Addition per Foot (oz)		Liquid Line Diameter (in. OD)	
		1/4	3/8
Suction Line Diameter (in. OD)	5/8	0.23	0.53
	3/4	-	0.55
	7/8	-	0.58
	1-1/8	-	0.64

Be sure to fill out the refrigerant charge label on the lower access panel of the unit. Using a durable marking instrument, fill in the factory charge found on the serial plate of the unit in the first box labeled FACTORY CHARGE. In the next box labeled FIELD CHARGE fill in the amount of charge added to the system. NOTE: The field charge amount may not be finalized until final adjustment. In the third box labeled TOTAL CHARGE add the two amounts in the boxes above.

NOTE: Charge should always be checked using superheat when using a piston and subcooling when using TXV equipped indoor coil to verify proper charge.

1. 3/8” valve to 5 - 10 in-lbs
2. 5/8” valve to 5 - 20 in-lbs
3. 3/4” valve to 5 - 20 in-lbs
4. 7/8” valve to 5 - 20 in-lbs

Do not introduce liquid refrigerant from the cylinder into the crankcase of the compressor as this may damage the compressor.

1. Break vacuum by fully opening liquid and suction base valves.
2. Set thermostat to call for cooling. Check indoor and outdoor fan operation and allow system to stabilize for 10 minutes for fixed orifices and 10-15 minutes for expansion valves.

Final Charge Adjustment

Airflow and Total Static Pressure for the indoor unit should be verified before attempting to charge system.

1. Total static pressure is .5” WC or less.
2. Airflow is correct for installed unit.
3. Airflow tables are in the installation manual and Spec Sheet for Indoor Unit.
4. Complete charging information are in Service Manual.

NOTE: Superheat adjustments should not be made until indoor ambient conditions have stabilized. This could take up to 24 hours depending on indoor temperature and humidity. Before checking superheat run the unit in cooling for 10 minutes or until refrigerant pressures stabilize. Use the following guidelines and methods to check unit operation and ensure that the refrigerant charge is within limits.

The outdoor temperature must be 60°F or higher. Set the room thermostat to COOL, fan switch to AUTO, and set the temperature control well below room temperature.

Units matched with indoor coils equipped with a non-adjustable TXV should be charged by Subcooling only. Superheat on indoor coils with adjustable TXV valves are factory set and no adjustment is normally required during startup. Only in unique applications due to refrigerant line length, differences in height between the indoor and outdoor unit and refrigerant tubing sizes or poor performance should Superheat setting require adjustment. These adjustments should only be performed by qualified service personnel.

Fixed Orifice

1. Purge gauge lines. Connect service gauge manifold to base-valve service ports. Run system at least 10 minutes to allow pressure to stabilize.
2. Temporarily install a thermometer 4-6” from the compressor on the suction line. Ensure the thermometer makes adequate contact and is insulated for best possible readings. Use vapor temperature to determine superheat.
3. Refer to the superheat table provided for proper system superheat. Add charge to lower superheat or recover charge to raise superheat.
4. Disconnect manifold set, installation is complete. **Superheat Formula = Suct. Line Temp. - Sat. Suct. Temp.**

SERVICING

Expansion Valve System

NOTE: Units matched with indoor coils equipped with a TXV should be charged by Subcooling only.

SUBCOOLING FORMULA = SATURATED LIQUID LINE TEMPERATURE - LIQUID LINE TEMPERATURE

NOTE: for two-stage models, unit will need to be charged at low stage.
For adjustment, please refer to the illustration above. Carefully remove the nut without damaging the TXV.

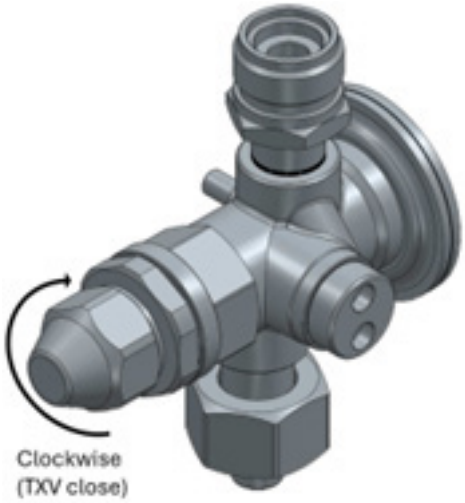

For adjustment, please refer to the illustration above. Carefully remove the nut without damaging the TXV. Rotate the TXV clockwise (right) to close it, ensuring the TXV is oriented as shown in the illustration. If it is not, adjust the orientation accordingly. Each adjustment should involve a rotation of 1/8 turn: clockwise (right) to close the TXV (as per Illustration) and counterclockwise (left) to open it. The total combined adjustment must not exceed 1.5 turns in either direction from the default set point.

Prior to recharging the system, it shall be pressure tested with the appropriate purging gas. The system shall be leaktested on completion of charging but prior to commissioning. A follow up leak test shall be carried out prior to leaving the site.

1. Purge gauge lines. Connect service gauge manifold to base-valve service ports. Run system at least 10 minutes to allow pressure to stabilize.
2. Clamp a pipe clamp thermometer on the liquid line near the liquid line service valve and 4-6” from the compressor on the suction line.
   a. Ensure the thermometer makes adequate contact to obtain the best possible readings.
   b. The temperature read with the thermometer should be lower than the saturated condensing temperature.
3. The difference between the measured saturated condensing temperature and the liquid line temperature is the liquid Subcooling value.
4. TXV-based systems should have a Subcooling value of 8°F +/- 1°F.
5. Add refrigerant to increase Subcooling and remove refrigerant to decrease Subcooling.

System Superheat Targets for Piston Match-ups (+/- 1.0 °F)

Outdoor Dry Bulb Temperature, °F	Indoor Wet Bulb Temperature, °F								
	55	57	59	61	63	65	67	69	71
60	10	13	17	20	23	26	29	30	31
65	8	11	14	16	19	22	26	27	29
70	5	8	10	13	15	19	23	24	25
75	---	---	6	9	11	15	20	21	23
80	---	---	---	---	7	12	17	18	20
85	---	---	---	---	---	8	13	15	16
90	---	---	---	---	---	7	10	11	13
95	---	---	---	---	---	---	7	8	10
100	---	---	---	---	---	---	---	7	8
105	---	---	---	---	---	---	---	---	7
110	---	---	---	---	---	---	---	---	---
115	---	---	---	---	---	---	---	---	---

Superheat Formula = Suct. Line Temp. - Sat. Suct. Temp.

SERVICING

SATURATED SUCTION PRESSURE TEMPERATURE CHART	
SUCTION PRESSURE	SATURATED SUCTION TEMPERATURE ºF
PSIG	R-32
40	-7
42	-6
44	-4
48	-1
50	1
52	2
54	4
56	5
58	6
60	8
62	9
64	10
66	12
68	13
70	14
72	15
74	17
76	18
78	19
80	20
85	23
90	25
95	28
100	30
105	33
110	35
115	37
120	40
125	42
130	44
135	46
140	48
145	50
150	52
155	53
160	55

SATURATED LIQUID PRESSURE TEMPERATURE CHART	
LIQUID PRESSURE	SATURATED SUCTION TEMPERATURE ºF
PSIG	R-32
200	68
210	71
220	74
230	77
240	80
250	82
260	85
270	87
280	90
290	92
300	94
310	97
320	99
330	101
340	103
350	105
360	107
370	109
380	111
390	113
400	115
410	117
420	118
430	120
440	122
450	124
460	125
470	127
480	128
490	130
500	132
525	135
550	139
575	143
600	146
625	150

NOTE: Specifications And Performance Data Listed Herein Are Subject To Change Without Notice.

SERVICING

Superheat Adjustment

NOTE: Units matched with indoor coils equipped with a TXV should be charged by Subcooling only.

SUPERHEAT FORMULA = SUCTION LINE TEMPERATURE - SATURATED SUCTION TEMPERATURE

NOTE: for two-stage models, unit will need to be charged at low stage.

1. Clamp a pipe clamp thermometer near the suction line 4-6” from the compressor on the suction line.
   a. Ensure the thermometer makes adequate contact for the best possible readings.
   b. The temperature read with the thermometer should be higher than the saturated suction temperature.
2. The difference between the measured saturated suction temperature and the suction line temperature is the Superheat value.
3. TXV-based systems should have a Superheat value as shown in the table below.
4. Adjust Superheat by turning the TXV valve stem clockwise to **increase** and **counterclockwise** to **decrease**.
   a. If Subcooling and Superheat are low, **adjust** the TXV to the superheat setting specified in the table below and then check Subcooling.
   b. If Subcooling is low and Superheat is high, **add** charge to **raise** Subcooling to 8°F +/- 1°F then check Superheat.
   c. If Subcooling and Superheat are high, **adjust** the TXV valve to the superheat specified in the table below then check the Subcooling value.
   d. If Subcooling is high and Superheat is low, **adjust** the TXV valve to the superheat specified in the table below and **remove** charge to lower the Subcooling to 8°F +/- 1°F.

NOTE: <u>DO NOT</u> adjust the charge based exclusively on suction pressure unless for general charging in the case of a gross undercharge.

NOTE: Check the Schrader ports for leaks and tighten valve cores if necessary. Install caps finger-tight.

Superheat Settings for Expansion Valve Systems		
Tonnage	**SH at Compressor**	**SC at OD Liq**
1.5-2.5T	10-14°F	7-9°F
3.0-5.0T	9-11°F	7-9°F

Superheat setting for TXV systems for GLXS4B, ALXS4B, VLXS4B and ALXS4N family

Superheat Settings for Expansion Valve Systems		
Tonnage	**SH at Compressor**	**SC at OD Liq**
1.5-2.5T	10-14°F	7-9°F
3.0-5.0T	10-12°F	7-9°F

Superheat setting for TXV systems for GLXS3B, ALXS3B, VLXS3B and ALXS3N family

Superheat Settings for Expansion Valve Systems		
Tonnage	**SH at Compressor**	**SC at OD Liquid**
1.5T-4.0T	10-12°F	7-9°F
5.0T	10-12°F	5-7°F

Superheat / Subcool Setting for TXV systems for GLXS5BA and ALXS5BA

Heat Pump - Heating Cycle

Charge heat pump by weight, accounting for line size, length, and components. For TXV units, target values shown in charge tables below measured 4–6″ from the compressor. Make final charge in cooling mode and complete the charge label. Perform a final leak test per System Startup instructions. Reinstall valve caps fingertight on all service ports after servicing.

The proper method of charging a heat pump in the heat mode is by weight with the additional charge adjustments for line size, line length, and other system components. For best results, on outdoor units with TXVs, superheat should be 8°F +/- 1°F at 4-6” from the compressor. Make final charge adjustments in the cooling cycle. Ensure the charge label has been filled out when final charging is complete. Follow directions in the System Startup section. A final leak test is recommended before leaving the site of installation. When servicing is complete, the red valve caps that are supplied on the valves must be reinstalled finger-tight on the liquid valve, vapor valve, and access port.

SERVICING

Tonnage	Cooling Mode		Heating Mode
	Superheat at Compressor	Subcool at Liquid Valve	Superheat at Compressor
1.5	19 ± 1°F	4 ± 1°F	7 ± 1°F
2	19 ± 1°F	8 ± 1°F	
2.5	17 ± 1°F		
3	15 ± 1°F		
3.5	16 ± 1°F		
4	16 ± 1°F		
5	16 ± 1°F		

Superheat / Subcool Setting for TXV systems for GLZS4, ALZS4 and VLZS4

Tonnage	Cooling Mode		Heating Mode
	Superheat at Compressor	Subcool at Liquid Valve	Superheat at Compressor
1.5	19 ± 1°F	4 ± 1°F	5 ± 1°F
2	18 ± 1°F	8 ± 1°F	8 ± 1°F
2.5	15 ± 1°F		
3	16 ± 1°F		
3.5	16 ± 1°F		
4	16 ± 1°F		

Superheat / Subcool Setting for TXV systems for GLZS5 and ALZS5

NOTE: Maximum refrigerant charge permissible in the system can be found on the Evaporator serial plate.

Checking Compressor Efficiency

The reason for compressor inefficiency is broken or damaged scroll flanks on Scroll compressors, reducing the ability of the compressor to pump refrigerant vapor.

The condition of the scroll flanks is checked in the following manner.

1. Attach gauges to the high and low side of the system.
2. Start the system and run a “Cooling Performance Test.

If the test shows:

a. Below normal high side pressure.
b. Above normal low side pressure.
c. Low temperature difference across coil.
d. Low amp draw at compressor.

And the charge is correct. The compressor is faulty - replace the compressor.

Overfeeding

Overfeeding by the expansion valve results in high suction pressure, cold suction line, and possible liquid slugging of the compressor.

If these symptoms are observed:

1. Check for an overcharged unit by referring to the cooling performance charts in the servicing section.
2. Check the operation of the power element in the valve as explained in Checking Expansion Valve Operation.
3. Check for restricted or plugged equalizer tube.

Underfeeding

Underfeeding by the expansion valve results in low system capacity and low suction pressures.

If these symptoms are observed:

1. Check for a restricted liquid line or drier. A restriction will be indicated by a temperature drop across the drier.
2. Check the operation of the power element of the valve as described in Checking Expansion Valve Operation.

Checking Expansion Valve Operation

1. Remove the remote bulb of the expansion valve from the suction line.
2. Start the system and cool the bulb in a container of ice water, closing the valve. As you cool the bulb, the suction pressure should fall and the suction temperature will rise.
3. Next warm the bulb in your hand. As you warm the bulb, the suction pressure should rise and the suction temperature will fall.
4. If a temperature or pressure change is noticed, the expansion valve is operating. If no change is noticed, the valve is restricted, the power element is faulty, or the equalizer tube is plugged.
5. Capture the charge, replace the valve and drier, evacuate and recharge.

Checking Restricted Liquid Line

When the system is operating, the liquid line is warm to the touch. If the liquid line is restricted, a definite temperature drop will be noticed at the point of restriction. In severe cases, frost will form at the restriction and extend down the line in the direction of the flow.

Discharge and suction pressures will be low, giving the appearance of an undercharged unit. However, the unit will have normal to high subcooling.

Locate the restriction, replace the restricted part, replace drier, evacuate and recharge.

Overcharge Of Refrigerant

An overcharge of refrigerant is normally indicated by an excessively high head pressure.

An evaporator coil, using an expansion valve metering device, will basically modulate and control a flooded evaporator and prevent liquid return to the compressor.

An evaporator coil, using a capillary tube metering device, could allow refrigerant to return to the compressor under extreme overcharge conditions. Also with a capillary tube metering device, extreme cases of insufficient indoor air can cause icing of the indoor coil and liquid return to the compressor, but the head pressure would be lower.

There are other causes for high head pressure which may be found in the “Service Problem Analysis Guide”.
If other causes check out normal, an overcharge or a system containing non-condensables would be indicated.

If this system is observed:
1. Start the system.
2. Remove and capture small quantities of gas from the suction line dill valve until the head pressure is reduced to normal.
3. Observe the system while running a cooling performance test. If a shortage of refrigerant is indicated, then the system contains non-condensables.

Non-Condensables

If non-condensables are suspected, shut down the system and allow the pressures to equalize. Wait at least 15 minutes. Compare the pressure to the temperature of the coldest coil since this is where most of the refrigerant will be. If the pressure indicates a higher temperature than that of the coil temperature, non-condensables are present.

Non-condensables are removed from the system by first removing the refrigerant charge, replacing and/or installing liquid line drier, evacuating and recharging.

Compressor Burnout

When a compressor burns out, high temperature develops causing the refrigerant, oil and motor insulation to decompose forming acids and sludge.

If a compressor is suspected of being burned-out, attach a refrigerant hose to the liquid line Schrader valve and properly remove and dispose of the refrigerant.

NOTICE: Violation of EPA regulations may result in fines or other penalties.

Now determine if a burn out has actually occurred. Confirm by analyzing an oil sample using a Sporlan Acid Test Kit, AK-3 or its equivalent.

Remove the compressor and obtain an oil sample from the suction stub. If the oil is not acidic, either a burnout has not occurred or the burnout is so mild that a complete clean-up is not necessary.

If acid level is unacceptable, the system must be cleaned by using the clean-up drier method.

CAUTION

Do not allow the sludge or oil to contact the skin. Severe burns may result.

NOTE: The Flushing Method using R-11 refrigerant is no longer approved by Amana® Brand Heating-Cooling.

Suction Line Drier Clean-Up Method

The POE oils used with R-32 refrigerant is an excellent solvent. In the case of a burnout, the POE oils will remove any burnout residue left in the system. If not captured by the refrigerant filter, they will collect in the compressor or other system components, causing a failure of the replacement compressor and/or spread contaminants throughout the system, damaging additional components.

Install a field supplied suction line drier. This drier should be installed as close to the compressor suction fitting as possible. The filter must be accessible and be rechecked for pressure drop after the system has operated for a time.

NOTE: At least twelve (12) inches of the suction line immediately out of the compressor stub must be discarded due to burned residue and contaminates.

1. Remove compressor discharge line strainer.
2. Remove the liquid line drier and expansion valve.
3. Purge all remaining components with dry nitrogen or carbon dioxide until clean.
4. Install new components **including** liquid line drier.
5. Braze all joints, leak test, evacuate, and recharge system.
6. Start up the unit and record the pressure drop across the drier.
7. Continue to run the system for a minimum of twelve (12) hours and recheck the pressure drop across the drier. Pressure drop should not exceed 6 PSIG.
8. Continue to run the system for several days, repeatedly checking pressure drop across the suction line drier. If the pressure drop never exceeds the 6 PSIG, the drier has trapped the contaminants. Remove the suction line drier from the system.
9. If the pressure drop becomes greater, then it must be replaced and steps 5 through 9 repeated until it does not exceed 6 PSIG.

NOTICE: Regardless, the cause for burnout must be determined and corrected before the new compressor is started.

SERVICING

Refrigerant Piping

The piping of a refrigeration system is very important in relation to system capacity, proper oil return to compressor, pumping rate of compressor and cooling performance of the evaporator.

POE oils maintain a consistent viscosity over a large temperature range which aids in the oil return to the compressor; however, there will be some installations which require oil return traps. These installations should be avoided whenever possible, as adding oil traps to the refrigerant lines also increases the opportunity for debris and moisture to be introduced into the system. Avoid long running traps in horizontal suction line.

Duct Static Pressures

The maximum allowable duct static pressure for the indoor section is found in the installation manual and the specification sheet for the respective product lines.

Tables are also provided for each coil, listing quantity of air (CFM) versus static pressure drop across the coil.

Too great an external static pressure will result in insufficient air that can cause icing of the coil. Too much air can cause poor humidity control and condensate to be pulled off the evaporator coil causing condensate leakage. Too much air can also cause motor overloading and in many cases this constitutes a poorly designed system.

Single Piece Air Handler External Static

To determine proper airflow, proceed as follows:

1. Using a Inclined Manometer or Magnehelic gauge, measure the static pressure of the return duct at the inlet of the air handler, this will be a negative pressure (For Example: .30” wc).
2. Measure the static pressure of the supply duct at the outlet of the air handler, this should be a positive pressure (For Example: .20” wc).
3. Add the two readings together (For Example: .30” wc + .20” wc = .50” wc total external static pressure).

NOTE: Both readings may be taken simultaneously and read directly on the manometer if so desired.

4. Consult proper air handler airflow chart for quantity of air (CFM) at the measured external static pressure.

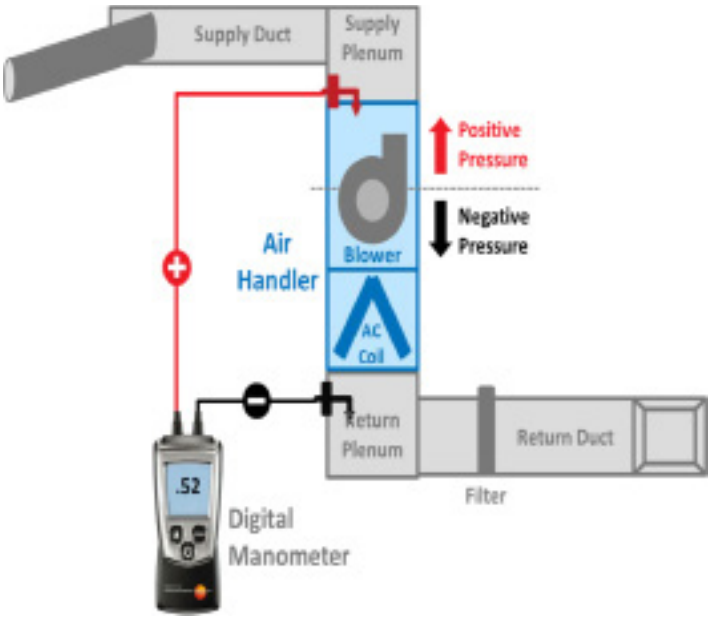

Two Piece Air Handler External Static Pressure

To determine proper airflow, proceed as follows:

1. Using a Inclined Manometer or Magnehelic gauge, measure the static pressure between the outlet of the evaporator coil and the inlet of the air handler, this will be a negative pressure (For Example: .30” wc).
2. Measure the static pressure of the supply duct at the outlet of the unit, this should be a positive pressure (For Example: .20” wc).
3. Add the two readings together (For Example: .30” wc + .20” wc = .50” wc total static pressure).

NOTE: Both readings may be taken simultaneously and read directly on the manometer if so desired.

4. Consult proper air handler airflow chart for quantity of air (CFM) at the measured external static pressure.

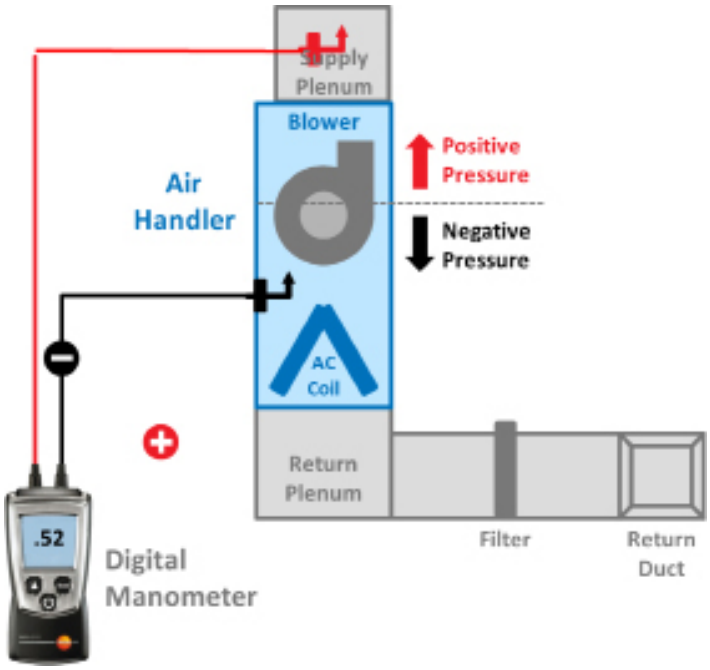

SERVICING

Furnace External Static Pressure

To determine proper airflow, proceed as follows:

1. With clean filters in the furnace, using a Inclined Manometer or Magnehelic gauge measure the static pressure of the return duct at the inlet of the furnace (Negative Pressure).
2. Measure the static pressure between the furnace and the inlet of the evaporator coil (Positive Pressure). The limit switch can be removed, and probe inserted to obtain this reading.
3. Add the two (2) readings together for total external static pressure.

NOTE: Both readings may be taken simultaneously and read directly on the manometer if so desired. If high Efficiency Air Filter or Electronic Air Cleaner is used in conjunction with the furnace, the readings must also include these components, as shown in the following drawing.

4. Consult proper airflow tables for the quantity of air (CFM).

If the total external static pressure exceeds the maximum allowable static, check for closed dampers, registers, undersized and/or oversized poorly laid out ductwork.

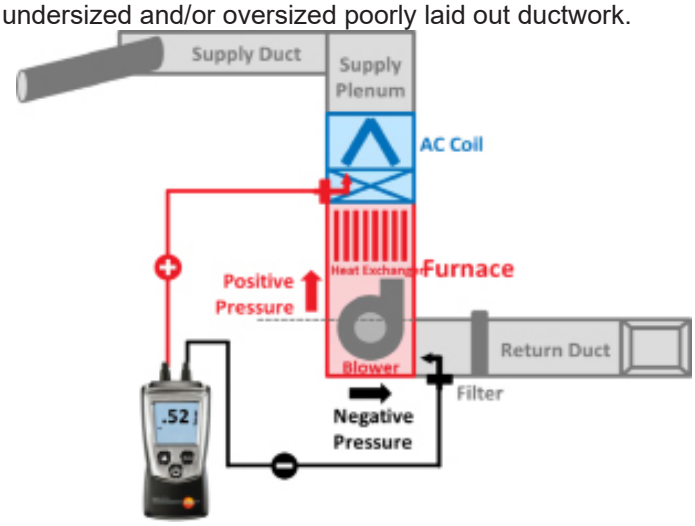

Static Pressure Drop

Periodic Maintenance

Motors

Indoor and Outdoor motors are permanently lubricated and do not need additional oiling.

Cleaning Outdoor Coil

1. Check for oil deposits on coil this could be an indication of possible leak. If no leak detected spray coil with ordinary household detergent.
2. Using garden hose, spray coil vertically downward with constant stream of water at moderate pressure. Keep nozzle at a 15 to 20° angle, about 3 in. from coil face. Spray so debris is washed out of coil and base pan.
3. Reinstall top cover and position blade.
4. Reconnect electrical power and check for proper operation.

Cleaning Outdoor Fan Blade

1. Check balance weights on fan blade.
2. Check fan blade setscrew for tightness.

Electrical Controls and Wiring

1. Disconnect power to both outdoor and indoor units.
2. Check all electrical connections for tightness.
3. Tighten all screws on electrical connections.
4. Connections that appear to be burned or smoky should be disassembled and cleaned all parts
5. Wire connections that appear burned and corroded should be replaced and crimp tightly to assure they do not overheat.
6. Reconnect electrical power to indoor and outdoor units and check for proper operation.

Cleaning Aluminum Coils

Evaporator coils and air handlers are equipped with an aluminum tube evaporator coil. The safest way to clean the evaporator coil is to simply flush the coil with water. This cleaning practice remains as the recommended cleaning method for both copper tube and aluminum tube residential cooling coils.

An alternate cleaning method is to use one of the products listed in the technical publication TP-109 (shipped in the literature bag with the unit) to clean the coils. The cleaners listed are the only agents deemed safe and approved for use to clean round tube aluminum coils. TP-109 is available on the web site in Partner Link > Service Toolkit.

NOTE: Ensure coils are rinsed well after use of any chemical cleaners

SERVICING

System Service and Decommissioning

Should repairs requiring recovery of the refrigerant become necessary, special considerations must be made when breaking into systems with flammable refrigerants. These repairs shall only be performed by qualified service personnel and in compliance with local and national regulations.

The refrigerant charge shall only be recovered into a cylinder labeled for use with R-32. Ensure that the refrigerant cylinder(s) are capable of holding the total system charge. Cylinders shall be complete with a pressure-relief valve and associated shut-off valves in good working order. Empty recovery cylinders are evacuated and, if possible, cooled before recovery occurs. A set of calibrated weighing scales shall be available and in good working order. Hoses shall be complete with leak-free disconnect couplings and in good condition.

All best practices for refrigerant recovery must be followed, including use of a recovery machine designated safe for use with R-32 Refrigerant. Isolate the system electrically prior to recovery. Ensure that all personal protective equipment is being applied correctly. Ensure that the recovery process is supervised at all times by the qualified servicer. Situate the R-32 cylinder on the scale before recovery takes place. Start the recovery machine and operate in accordance with its instructions. Do not overfill cylinders by more than 80% volume of its allowed liquid charge.

Should electrical components need to be replaced, ensure that the original equipment manufacturer's part or equivalent is used.

Markings and warnings on the unit shall continue to be visible and legible after installation and service. Correct any markings and warnings that are made illegible.
When decommissioning a system, all previously mentioned precautions regarding safe refrigerant handling must be followed. Recovered refrigerant shall not be charged into another refrigerating system unless it has been cleaned and checked. Equipment must be labeled, dated, and signed stating that it has been decommissioned and emptied of refrigerant.

Decommissioning
Before carrying out this procedure, it is essential that the technician is completely familiar with the equipment and all its detail. It is recommended good practice that all refrigerants are recovered safely.
Prior to the task being carried out, an oil and refrigerant sample shall be taken in case analysis is required prior to re-use of recovered refrigerant. It is essential that electrical power is available before the task is commenced.

a. Become familiar with the equipment and its operation.
b. Isolate system electrically.
c. Before attempting the procedure, ensure that:
   - mechanical handling equipment is available, if required, for handling refrigerant cylinders;
   - all personal protective equipment is available and being used correctly;
   - the recovery process is supervised at all times by a competent person;
   - recovery equipment and cylinders conform to the appropriate standards.
d. Pump down refrigerant system, if possible.
e. If a vacuum is not possible, make a manifold so that refrigerant can be removed from various parts of the system.
f. Make sure that cylinder is situated on the scales before recovery takes place.
g. Start the recovery machine and operate in accordance with instructions.
h. Do not overfill cylinders (no more than 80 % volume liquid charge).
i. Do not exceed the maximum working pressure of the cylinder, even temporarily.
j. When the cylinders have been filled correctly and the process completed, make sure that the cylinders and the equipment are removed from site promptly and all isolation valves on the equipment are closed off.
k. Recovered refrigerant shall not be charged into another REFRIGERATING SYSTEM unless it has been cleaned and checked.

Labeling of Equipment

Equipment shall be labeled stating that it has been decommissioned and emptied of refrigerant. The label shall be dated and signed. For appliances containing FLAMMABLE REFRIGERANTS, ensure that there are labels on the equipment stating the equipment contains FLAMMABLE REFRIGERANT.

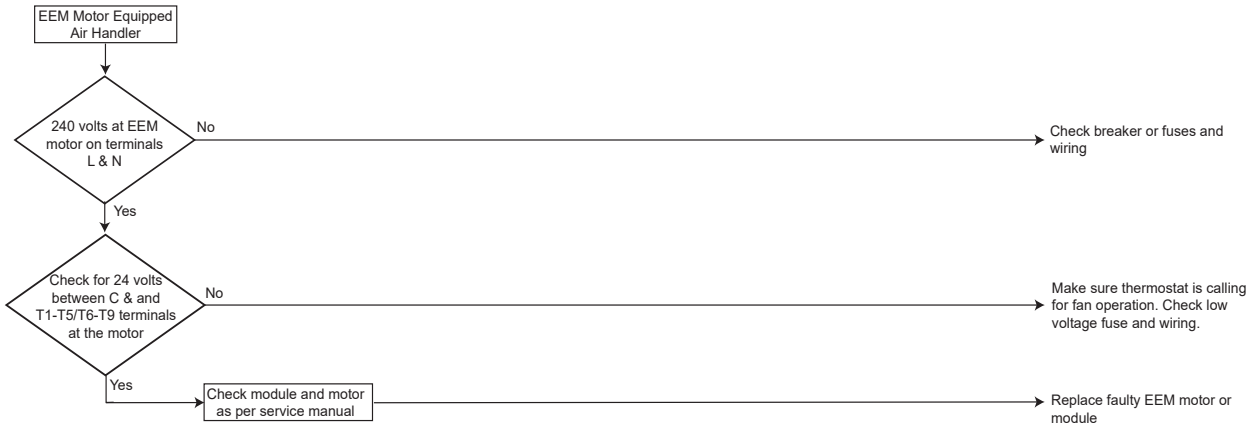
EEM Motor Equipped Air Handler
240 volts at EEM motor on terminals L & N
No
Check breaker or fuses and wiring
Yes
Check for 24 volts between C & and T1-T5/T6-T9 terminals at the motor
No
Make sure thermostat is calling for fan operation. Check low voltage fuse and wiring.
Yes
Check module and motor as per service manual
Replace faulty EEM motor or module

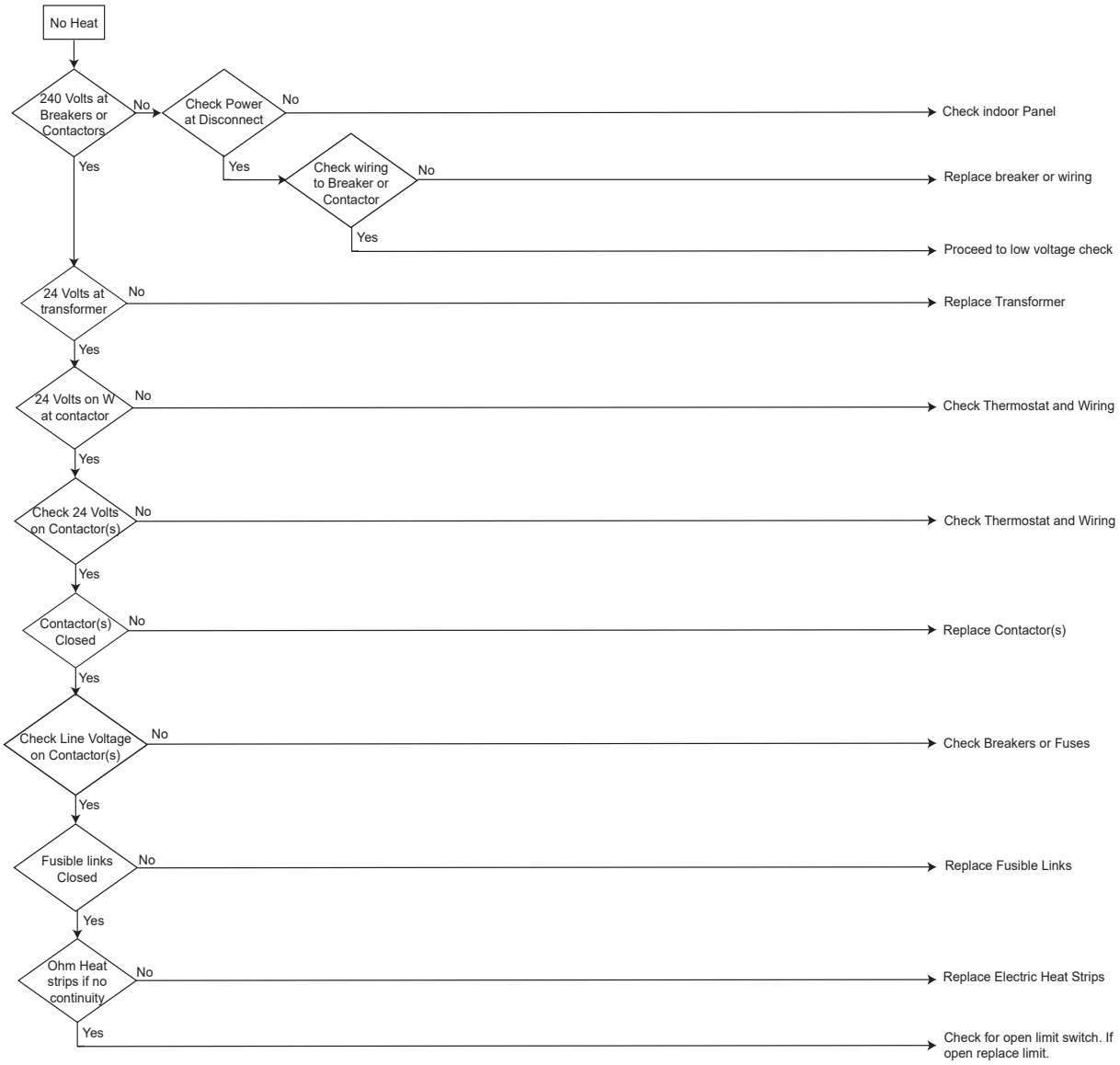
No Heat
240 Volts at Breakers or Contactors
No
Check Power at Disconnect
No
Check indoor Panel
Yes
Check wiring to Breaker or Contactor
No
Replace breaker or wiring
Yes
Proceed to low voltage check
Yes
24 Volts at transformer
No
Replace Transformer
Yes
24 Volts on W at contactor
No
Check Thermostat and Wiring
Yes
Check 24 Volts on Contactor(s)
No
Check Thermostat and Wiring
Yes
Contactor(s) Closed
No
Replace Contactor(s)
Yes
Check Line Voltage on Contactor(s)
No
Check Breakers or Fuses
Yes
Fusible links Closed
No
Replace Fusible Links
Yes
Ohm Heat strips if no continuity
No
Replace Electric Heat Strips
Yes
Check for open limit switch. If open replace limit.

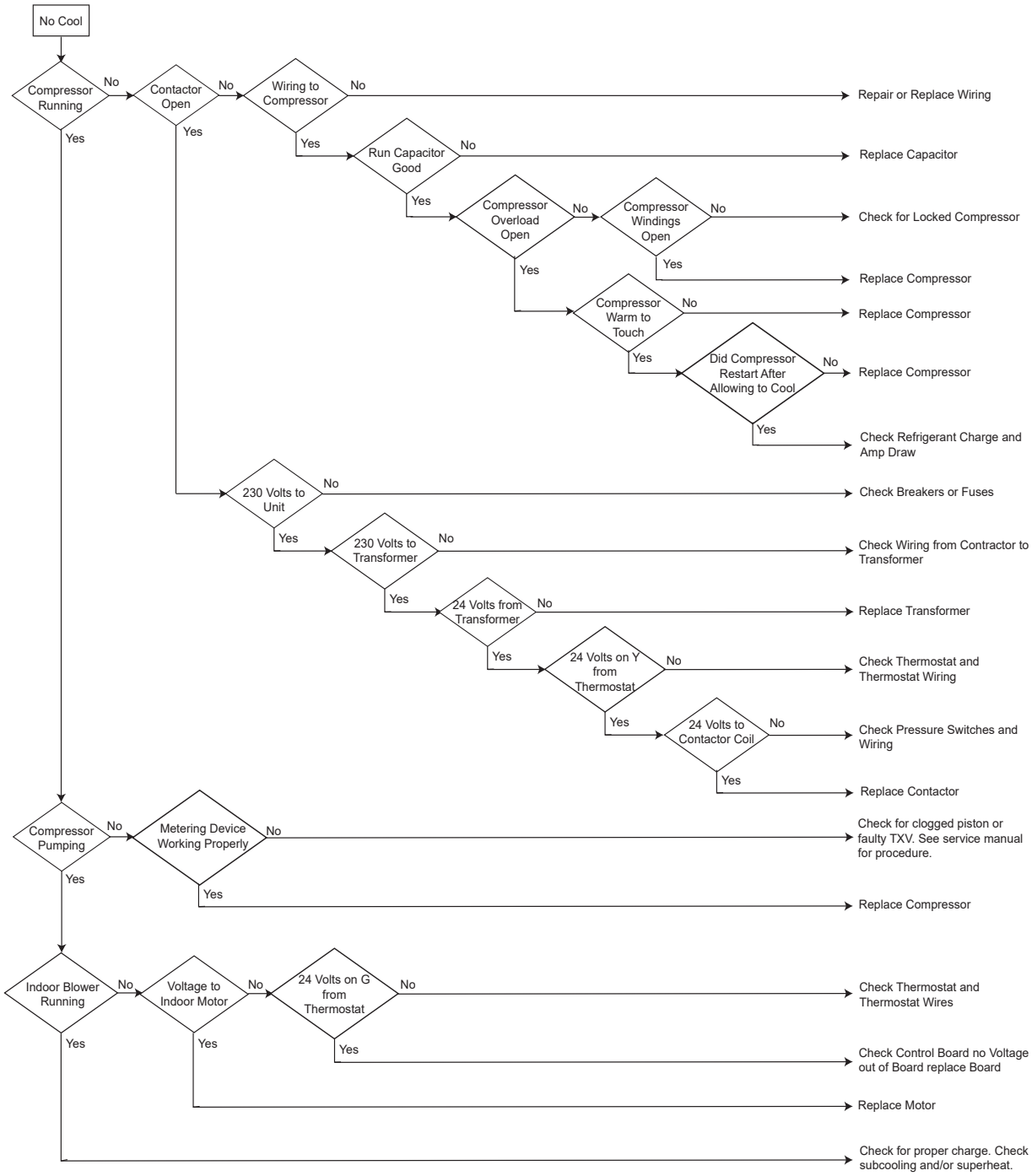
No Cool
Compressor Running
No
Yes
Contactor Open
No
Yes
Wiring to Compressor
No
Yes
Repair or Replace Wiring
Run Capacitor Good
No
Yes
Replace Capacitor
Compressor Overload Open
No
Yes
Compressor Windings Open
No
Yes
Check for Locked Compressor
Replace Compressor
Compressor Warm to Touch
No
Yes
Replace Compressor
Did Compressor Restart After Allowing to Cool
No
Yes
Replace Compressor
Check Refrigerant Charge and Amp Draw
230 Volts to Unit
No
Yes
Check Breakers or Fuses
230 Volts to Transformer
No
Yes
Check Wiring from Contractor to Transformer
24 Volts from Transformer
No
Yes
Replace Transformer
24 Volts on Y from Thermostat
No
Yes
Check Thermostat and Thermostat Wiring
24 Volts to Contactor Coil
No
Yes
Check Pressure Switches and Wiring
Replace Contactor
Compressor Pumping
No
Yes
Metering Device Working Properly
No
Yes
Check for clogged piston or faulty TXV. See service manual for procedure.
Replace Compressor
Indoor Blower Running
No
Yes
Voltage to Indoor Motor
No
Yes
24 Volts on G from Thermostat
No
Yes
Check Thermostat and Thermostat Wires
Check Control Board no Voltage out of Board replace Board
Replace Motor
Check for proper charge. Check subcooling and/or superheat.

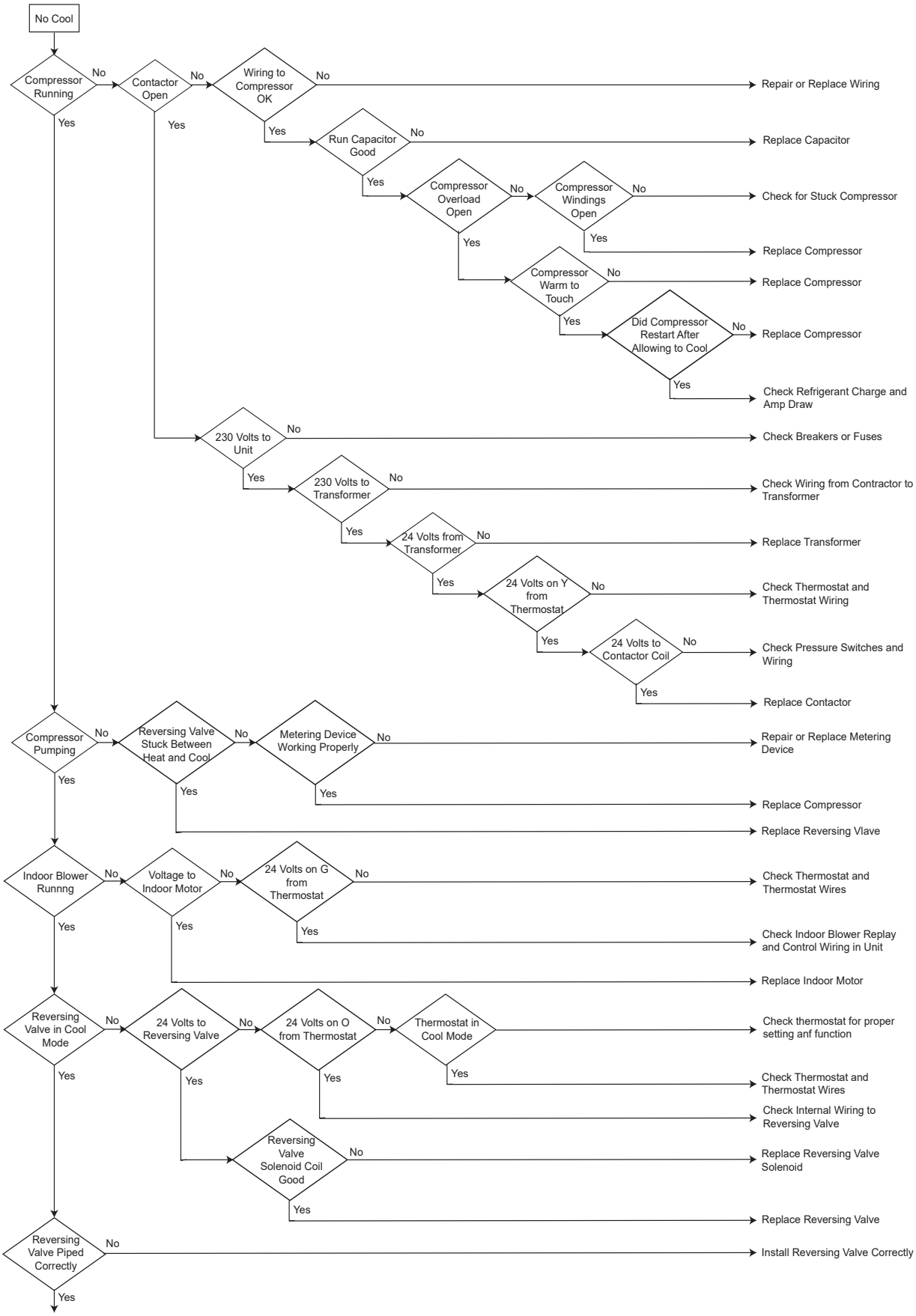
No Cool
Compressor Running
No
Yes
Contactor Open
No
Yes
Wiring to Compressor OK
No
Repair or Replace Wiring
Yes
Run Capacitor Good
No
Replace Capacitor
Yes
Compressor Overload Open
No
Compressor Windings Open
No
Check for Stuck Compressor
Yes
Replace Compressor
Yes
Compressor Warm to Touch
No
Replace Compressor
Yes
Did Compressor Restart After Allowing to Cool
No
Replace Compressor
Yes
Check Refrigerant Charge and Amp Draw
230 Volts to Unit
No
Check Breakers or Fuses
Yes
230 Volts to Transformer
No
Check Wiring from Contractor to Transformer
Yes
24 Volts from Transformer
No
Replace Transformer
Yes
24 Volts on Y from Thermostat
No
Check Thermostat and Thermostat Wiring
Yes
24 Volts to Contactor Coil
No
Check Pressure Switches and Wiring
Yes
Replace Contactor
Compressor Pumping
No
Yes
Reversing Valve Stuck Between Heat and Cool
No
Yes
Metering Device Working Properly
No
Repair or Replace Metering Device
Yes
Replace Compressor
Replace Reversing Vlave
Indoor Blower Runnng
No
Yes
Voltage to Indoor Motor
No
Yes
24 Volts on G from Thermostat
No
Check Thermostat and Thermostat Wires
Yes
Check Indoor Blower Replay and Control Wiring in Unit
Replace Indoor Motor
Reversing Valve in Cool Mode
No
Yes
24 Volts to Reversing Valve
No
Yes
24 Volts on O from Thermostat
No
Yes
Thermostat in Cool Mode
Check thermostat for proper setting anf function
Yes
Check Thermostat and Thermostat Wires
Check Internal Wiring to Reversing Valve
Reversing Valve Solenoid Coil Good
No
Replace Reversing Valve Solenoid
Yes
Replace Reversing Valve
Reversing Valve Piped Correctly
No
Install Reversing Valve Correctly
Yes

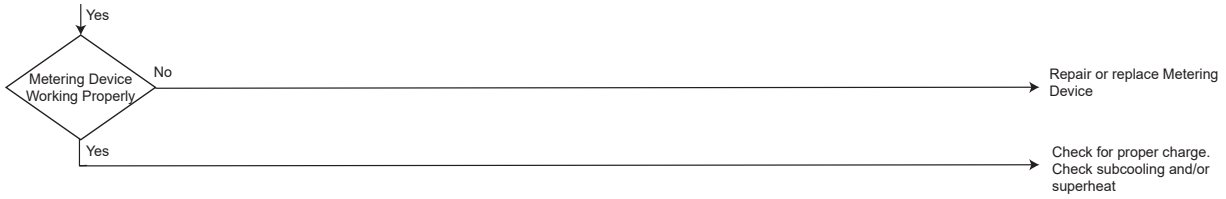
Yes
Metering Device Working Properly
No
Repair or replace Metering Device
Yes
Check for proper charge. Check subcooling and/or superheat

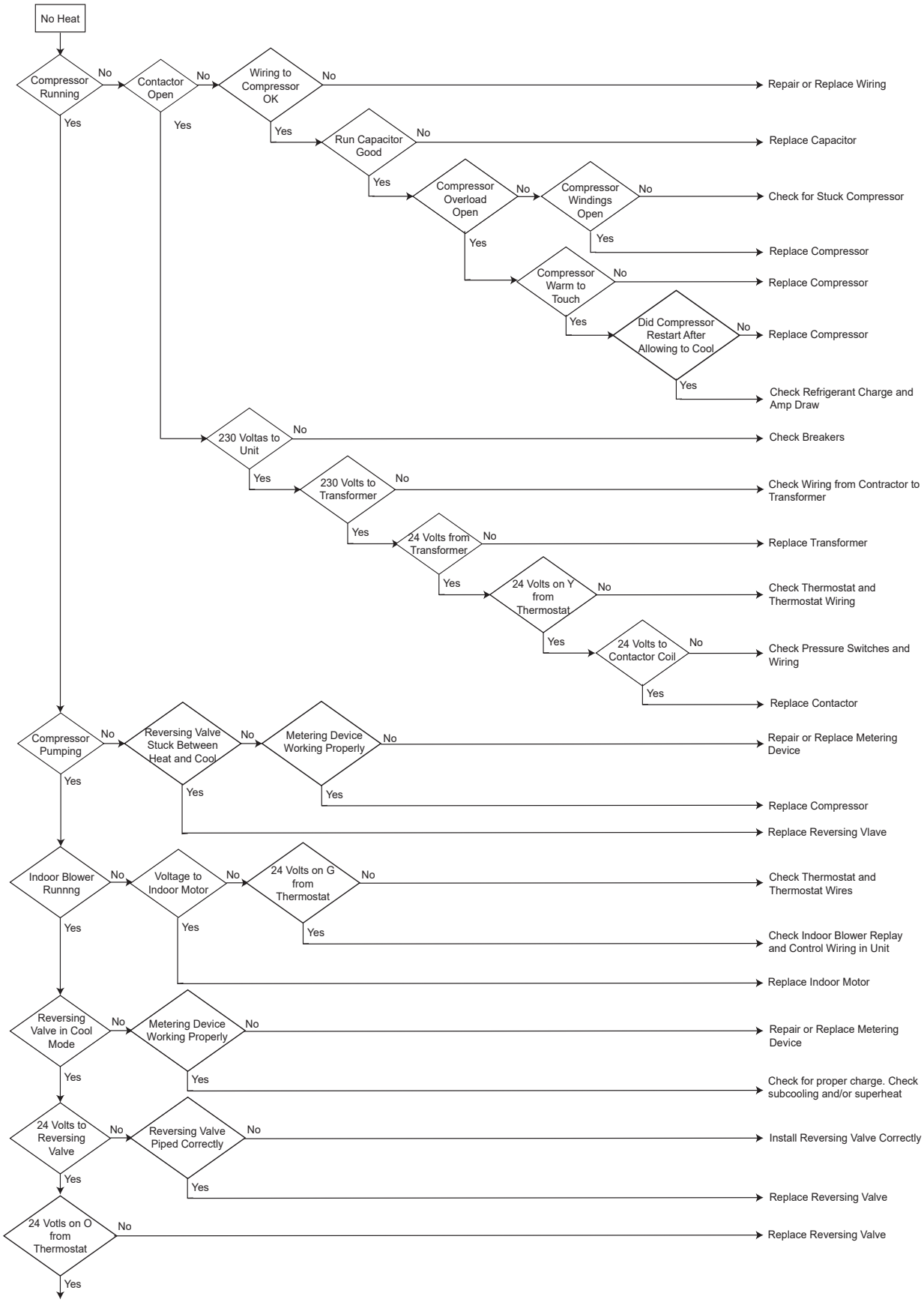
No Heat
Compressor Running
No
Yes
Contactor Open
No
Yes
Wiring to Compressor OK
No
Repair or Replace Wiring
Yes
Run Capacitor Good
No
Replace Capacitor
Yes
Compressor Overload Open
No
Compressor Windings Open
No
Check for Stuck Compressor
Yes
Replace Compressor
Yes
Compressor Warm to Touch
No
Replace Compressor
Yes
Did Compressor Restart After Allowing to Cool
No
Replace Compressor
Yes
Check Refrigerant Charge and Amp Draw
230 Voltas to Unit
No
Check Breakers
Yes
230 Volts to Transformer
No
Check Wiring from Contractor to Transformer
Yes
24 Volts from Transformer
No
Replace Transformer
Yes
24 Volts on Y from Thermostat
No
Check Thermostat and Thermostat Wiring
Yes
24 Volts to Contactor Coil
No
Check Pressure Switches and Wiring
Yes
Replace Contactor
Compressor Pumping
No
Yes
Reversing Valve Stuck Between Heat and Cool
No
Yes
Metering Device Working Properly
No
Repair or Replace Metering Device
Yes
Replace Compressor
Replace Reversing Vlave
Indoor Blower Runnng
No
Yes
Voltage to Indoor Motor
No
Yes
24 Volts on G from Thermostat
No
Check Thermostat and Thermostat Wires
Yes
Check Indoor Blower Replay and Control Wiring in Unit
Replace Indoor Motor
Reversing Valve in Cool Mode
No
Yes
Metering Device Working Properly
No
Repair or Replace Metering Device
Yes
Check for proper charge. Check subcooling and/or superheat
24 Volts to Reversing Valve
No
Yes
Reversing Valve Piped Correctly
No
Install Reversing Valve Correctly
Yes
Replace Reversing Valve
24 Votls on O from Thermostat
No
Replace Reversing Valve
Yes

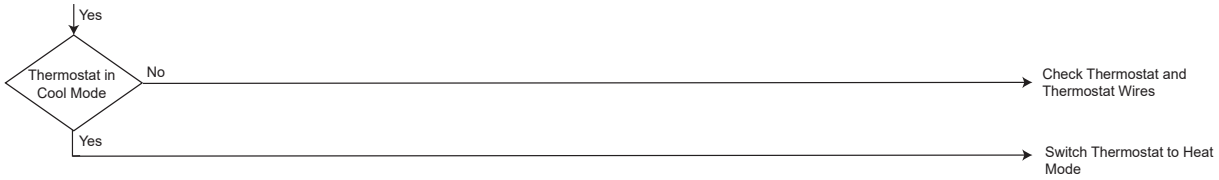
Yes
Thermostat in Cool Mode
No
Check Thermostat and Thermostat Wires
Yes
Switch Thermostat to Heat Mode

WIRING DIAGRAMS

ALXS3BN1810AA - ALXS3BN6010AA
ALXS4BA1810AA - ALXS4BA4810AA

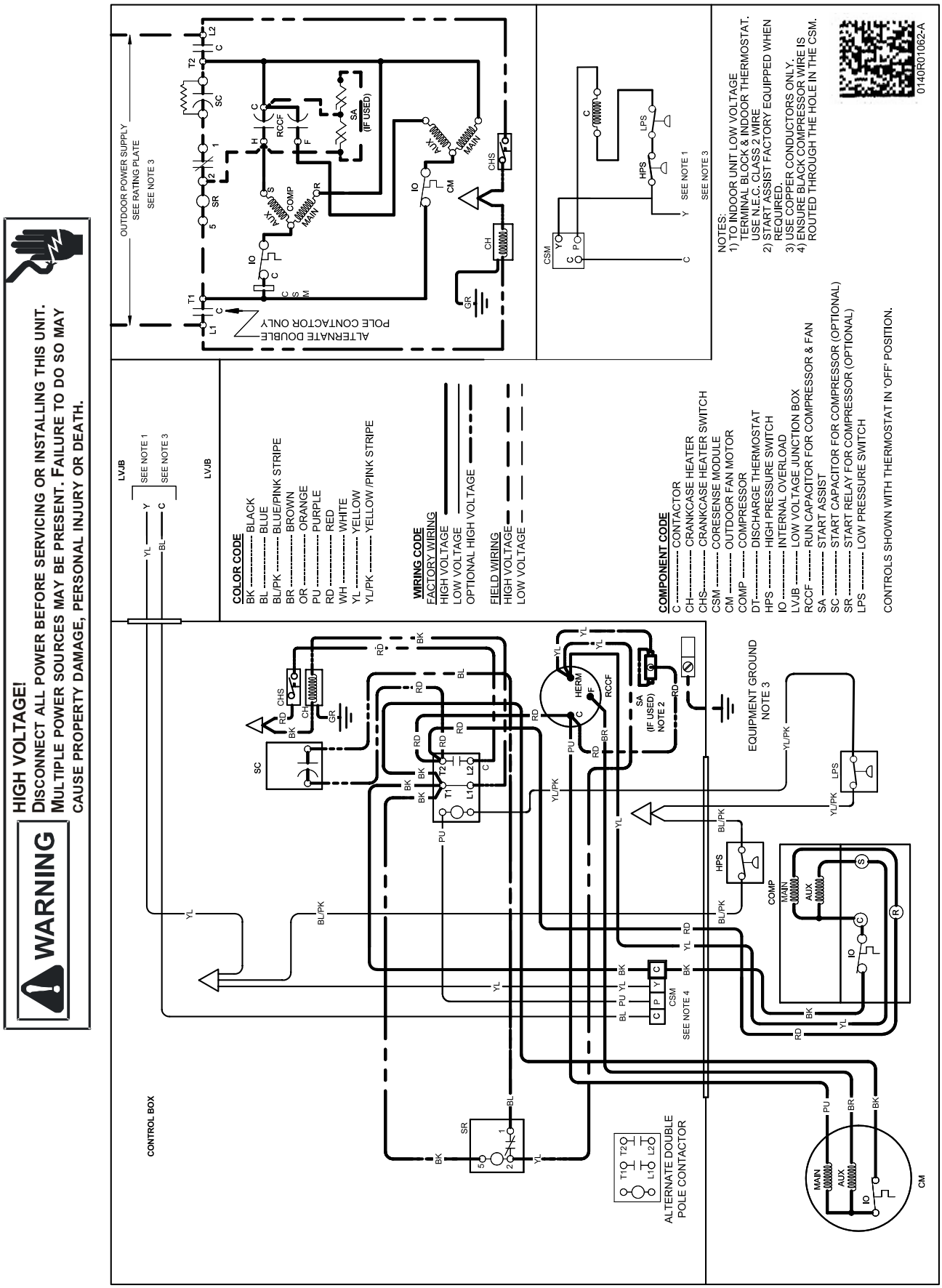

Wiring is subject to change. Always refer to the wiring diagram on the unit for the most up-to-date wiring.

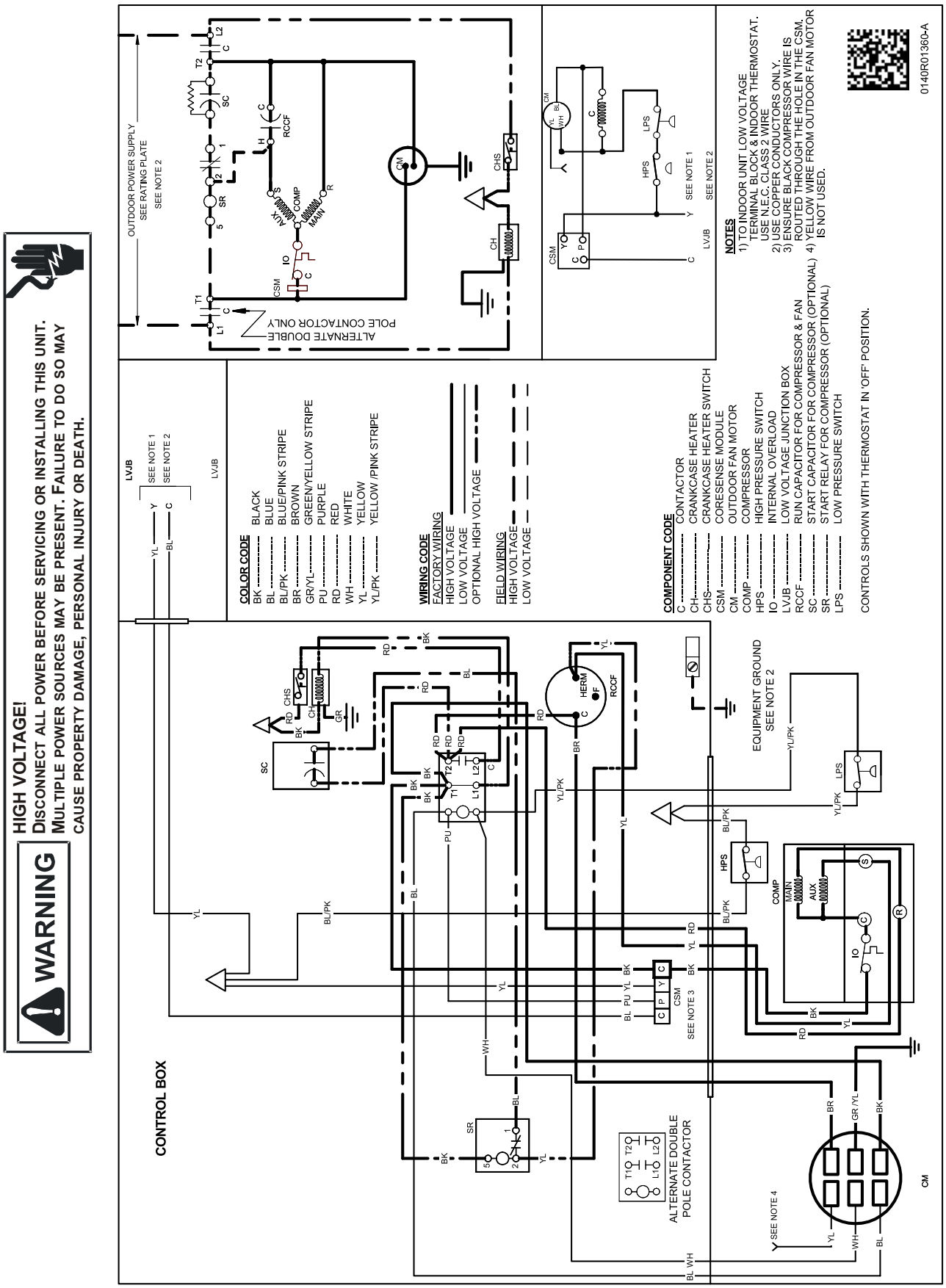

Wiring is subject to change. Always refer to the wiring diagram on the unit for the most up-to-date wiring.

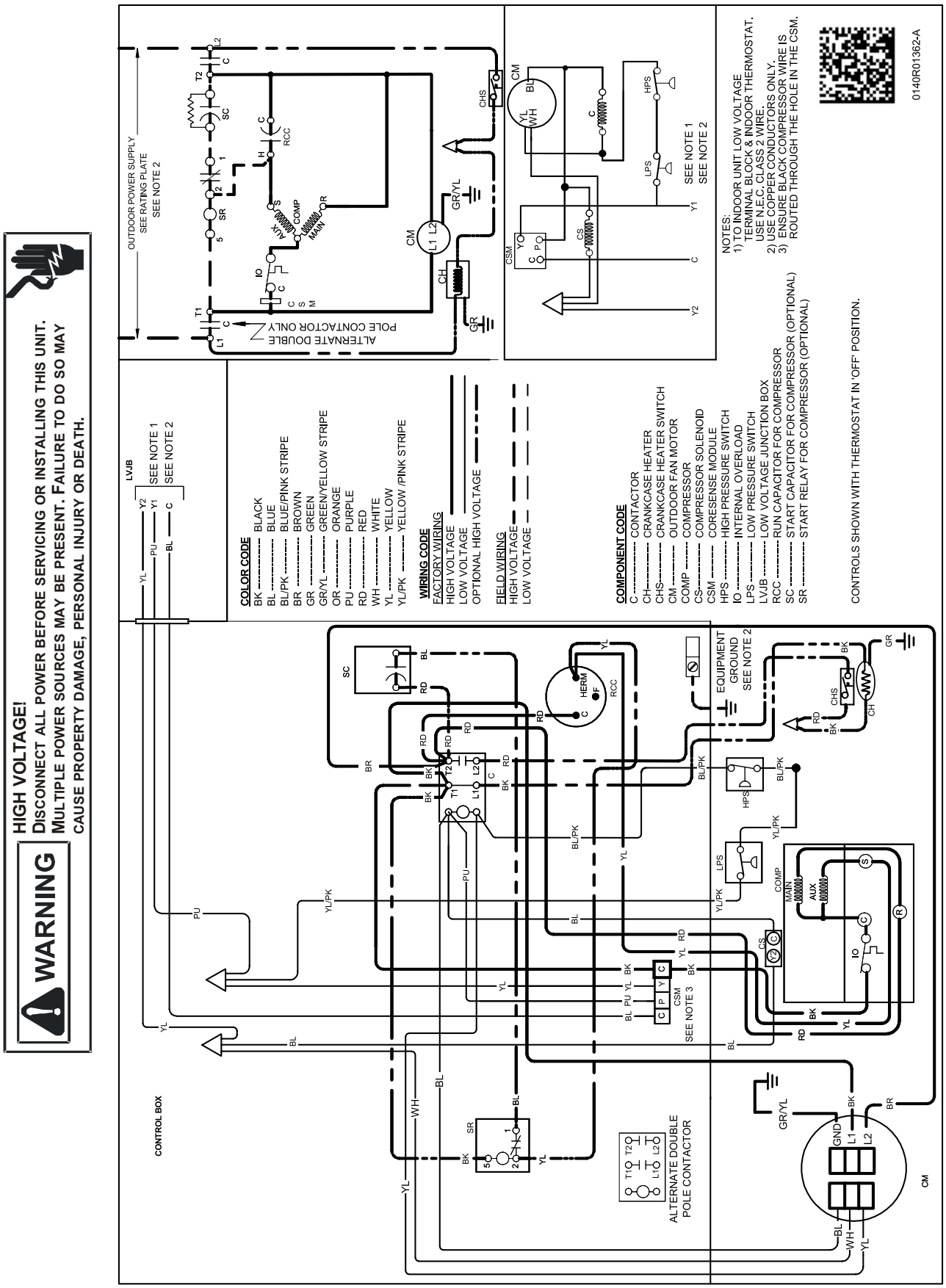

Wiring is subject to change. Always refer to the wiring diagram on the unit for the most up-to-date wiring.

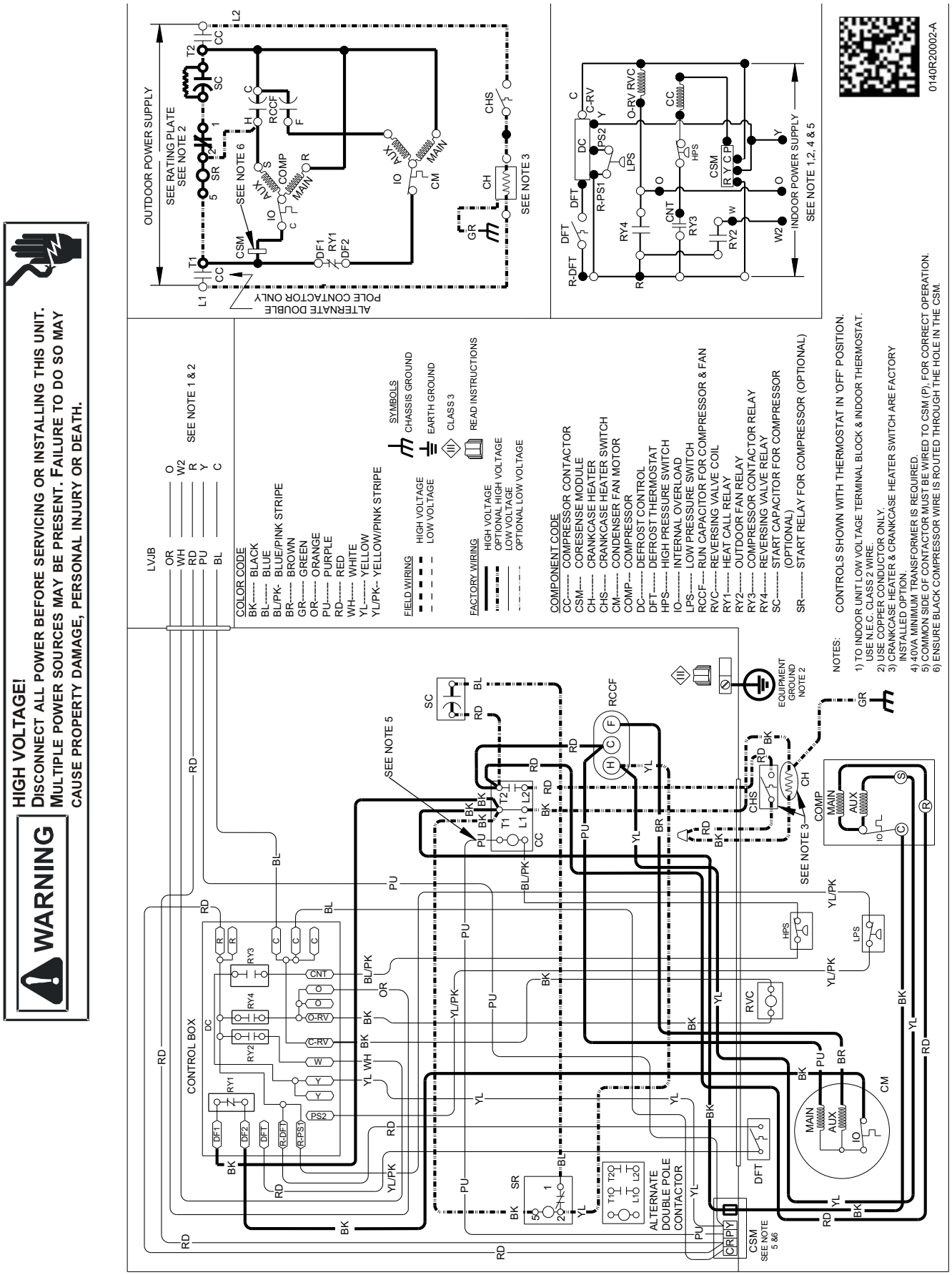

Wiring is subject to change. Always refer to the wiring diagram on the unit for the most up-to-date wiring.

WIRING DIAGRAMS

ALZS4NA3610AA - ALZS4NA6010AA/
GLZS4BA3610AA - GLZS4BA6010AA/
GLZS4MA1810AA - GLZS4MA3610AA/
GLZS5BA1810AA-GLZS5BA4810AA/
VLZS4BA3610AA-VLZS4BA6010AA

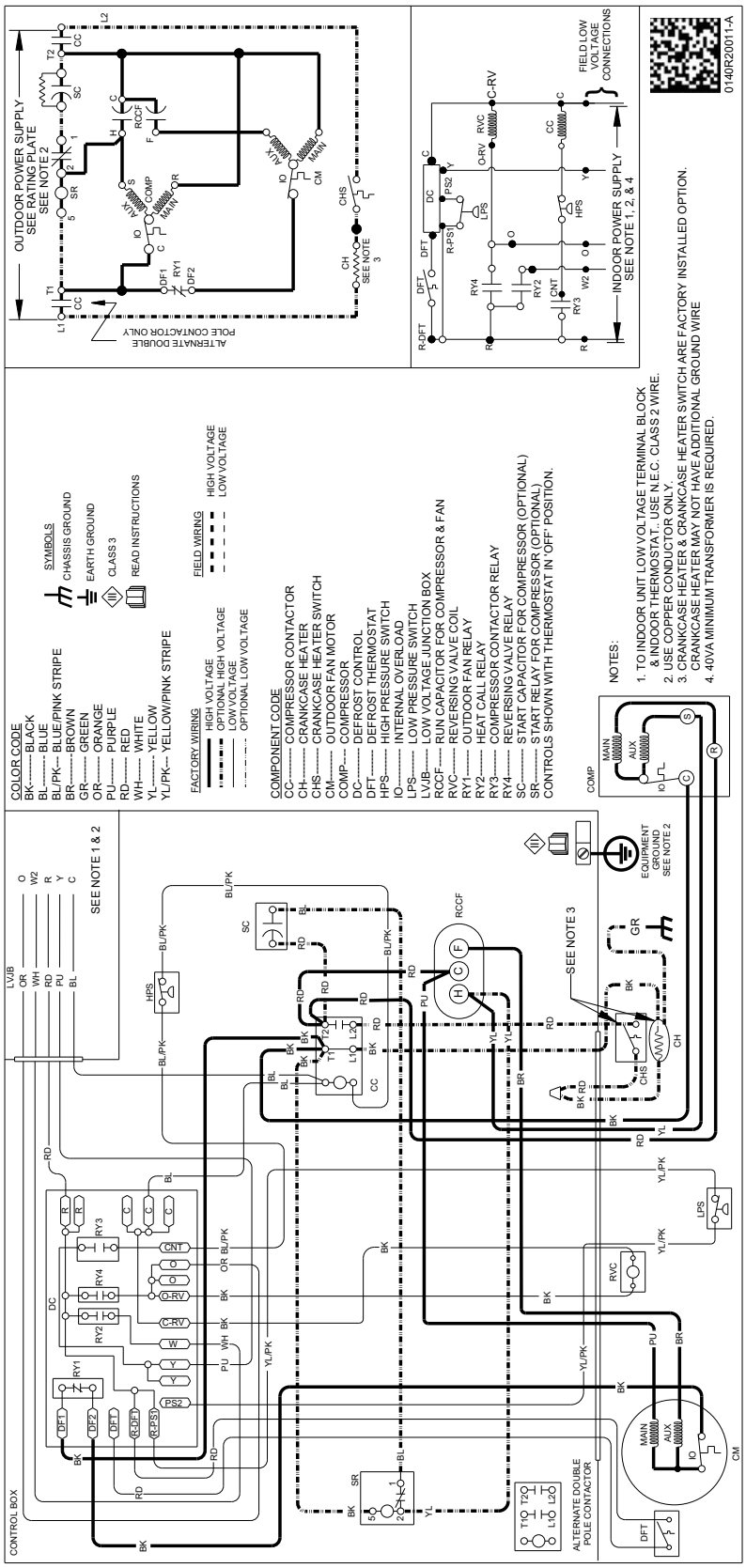

Wiring is subject to change. Always refer to the wiring diagram on the unit for the most up-to-date wiring.

WIRING DIAGRAMS

ALZS4NA1810AA-ALZS4NA3010AA/ GLZS4BA1810AA-GLZS4BA3010AA/ VLZS4BA1810AA-VLZS4BA3010AA

WARNING

HIGH VOLTAGE!
DISCONNECT ALL POWER BEFORE SERVICING OR INSTALLING THIS UNIT. MULTIPLE POWER SOURCES MAY BE PRESENT. FAILURE TO DO SO MAY CAUSE PROPERTY DAMAGE, PERSONAL INJURY OR DEATH.

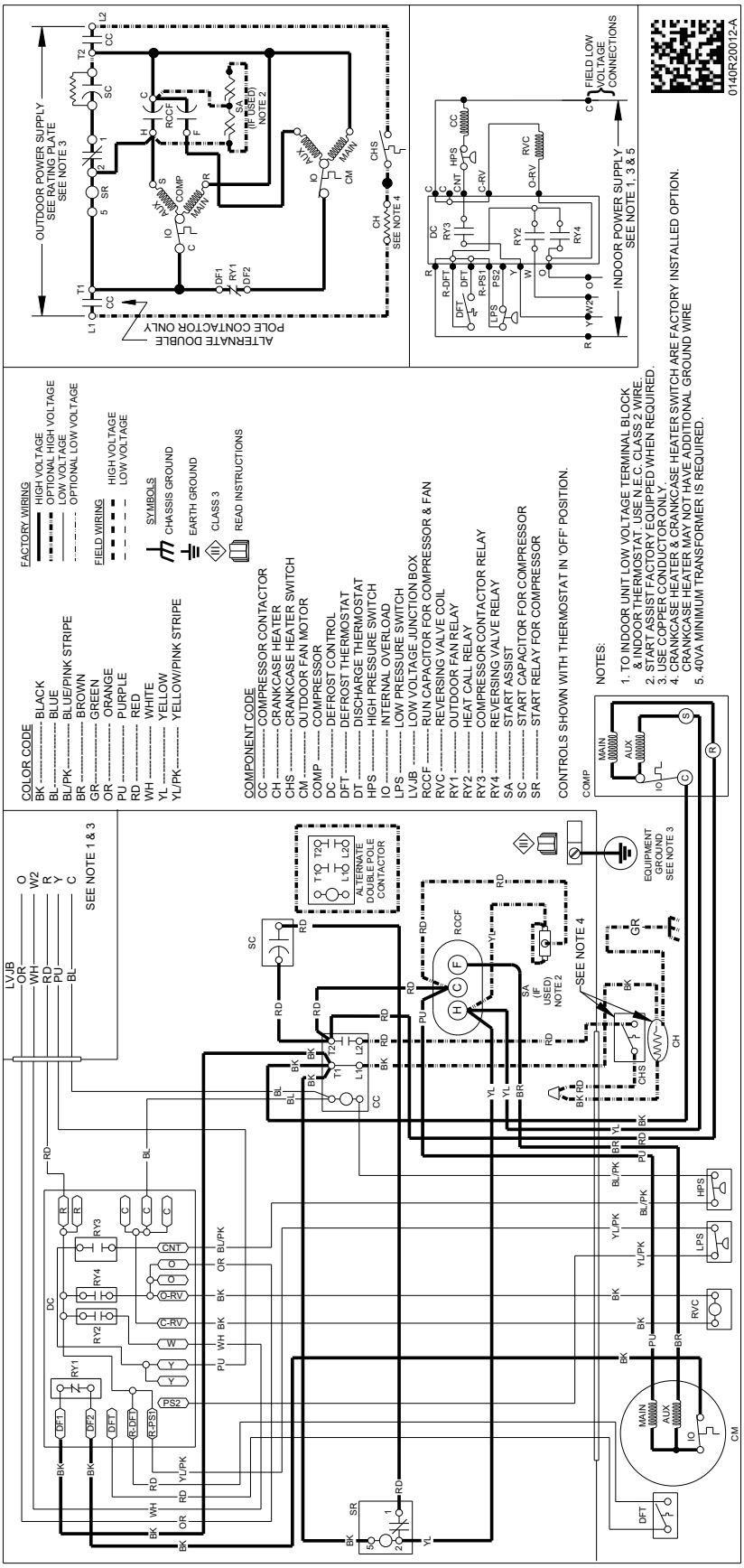

Wiring is subject to change. Always refer to the wiring diagram on the unit for the most up-to-date wiring.

WARNING

HIGH VOLTAGE!
DISCONNECT ALL POWER BEFORE SERVICING OR INSTALLING THIS UNIT. MULTIPLE POWER SOURCES MAY BE PRESENT. FAILURE TO DO SO MAY CAUSE PROPERTY DAMAGE, PERSONAL INJURY OR DEATH.

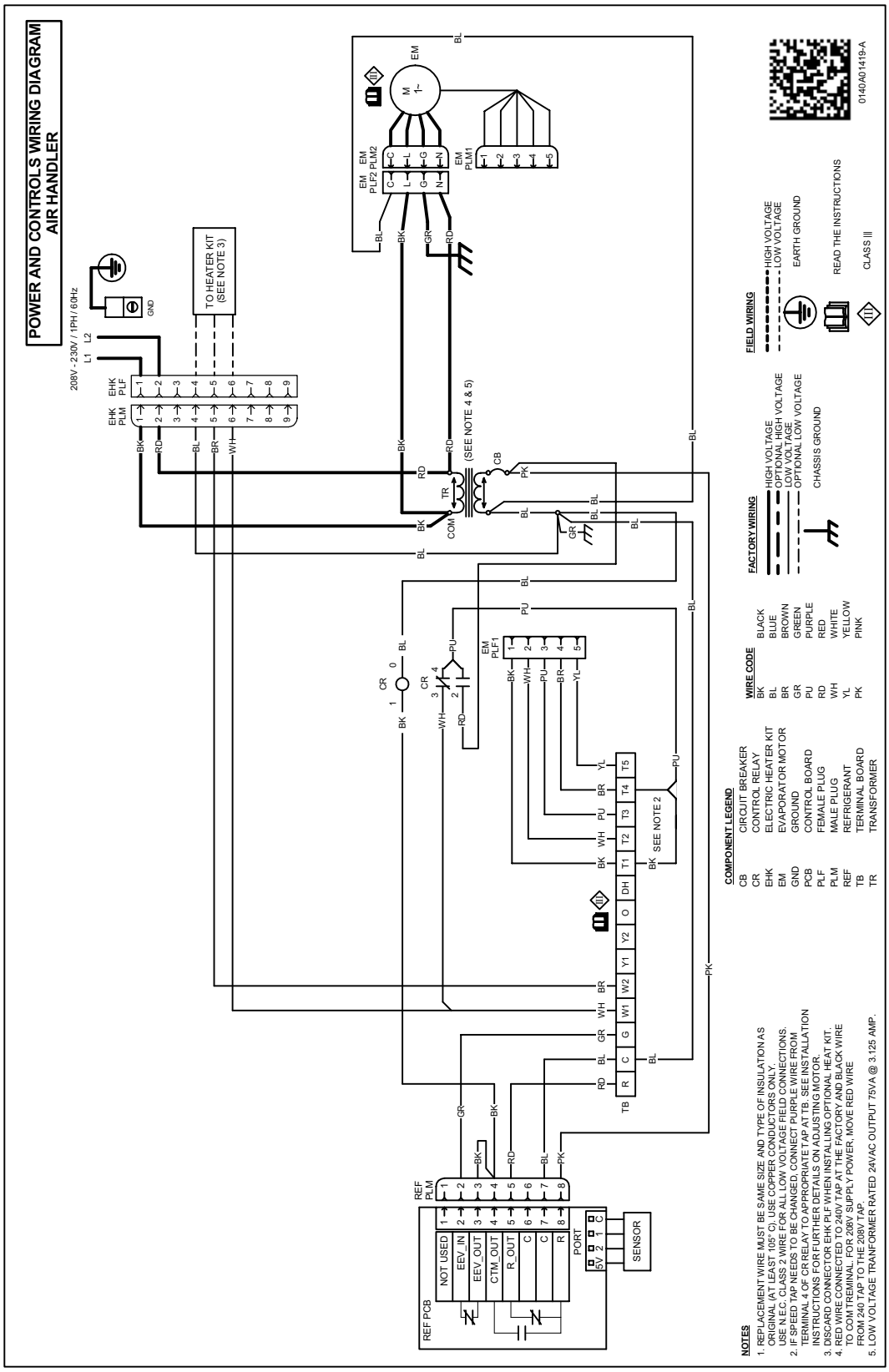

Wiring is subject to change. Always refer to the wiring diagram on the unit for the most up-to-date wiring.

WARNING

HIGH VOLTAGE!
DISCONNECT ALL POWER BEFORE SERVICING OR INSTALLING THIS UNIT. MULTIPLE POWER SOURCES MAY BE PRESENT. FAILURE TO DO SO MAY CAUSE PROPERTY DAMAGE, PERSONAL INJURY OR DEATH.

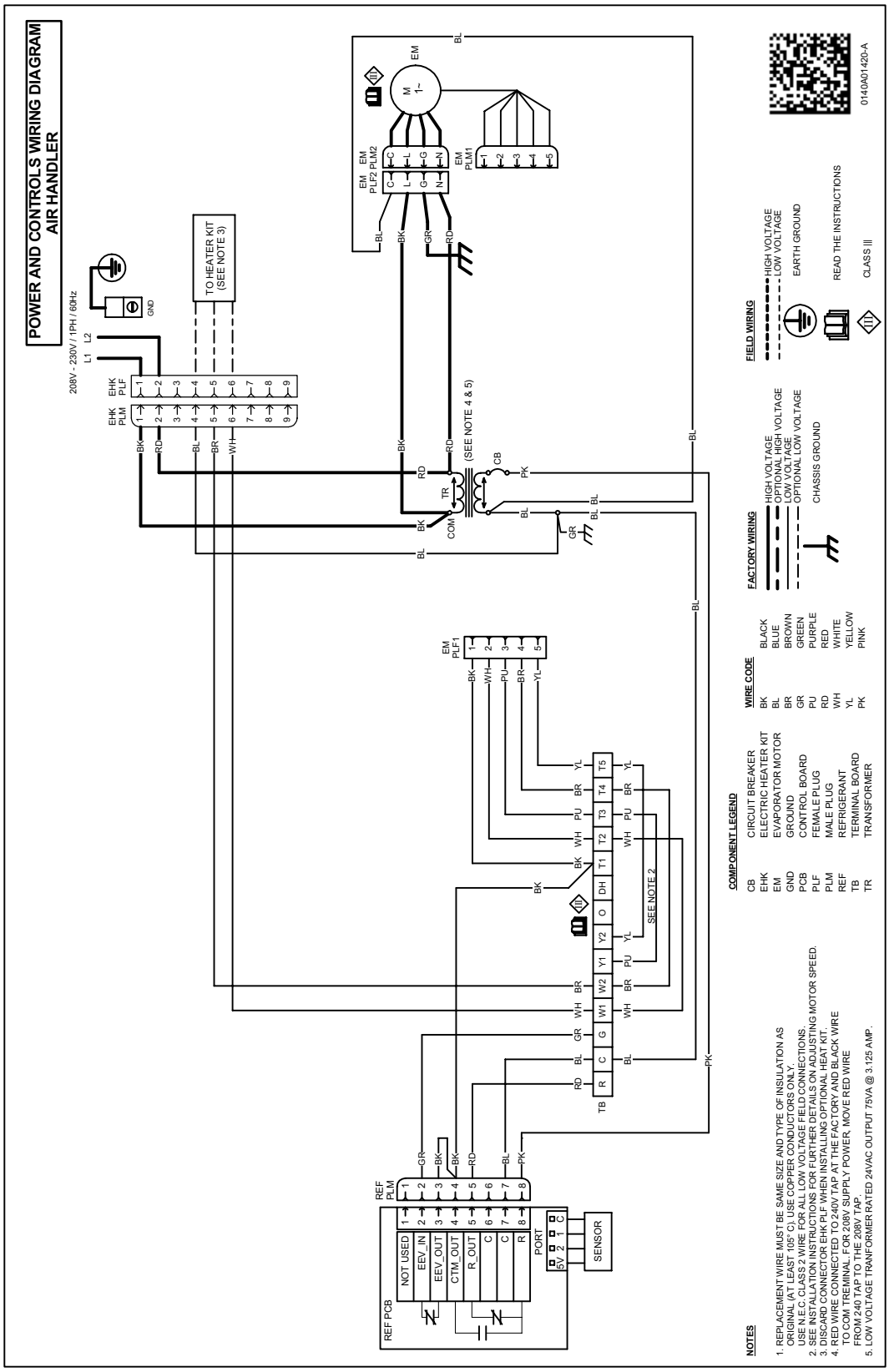

Wiring is subject to change. Always refer to the wiring diagram on the unit for the most up-to-date wiring.

WARNING

HIGH VOLTAGE!
DISCONNECT ALL POWER BEFORE SERVICING OR INSTALLING THIS UNIT. MULTIPLE POWER SOURCES MAY BE PRESENT. FAILURE TO DO SO MAY CAUSE PROPERTY DAMAGE, PERSONAL INJURY OR DEATH.

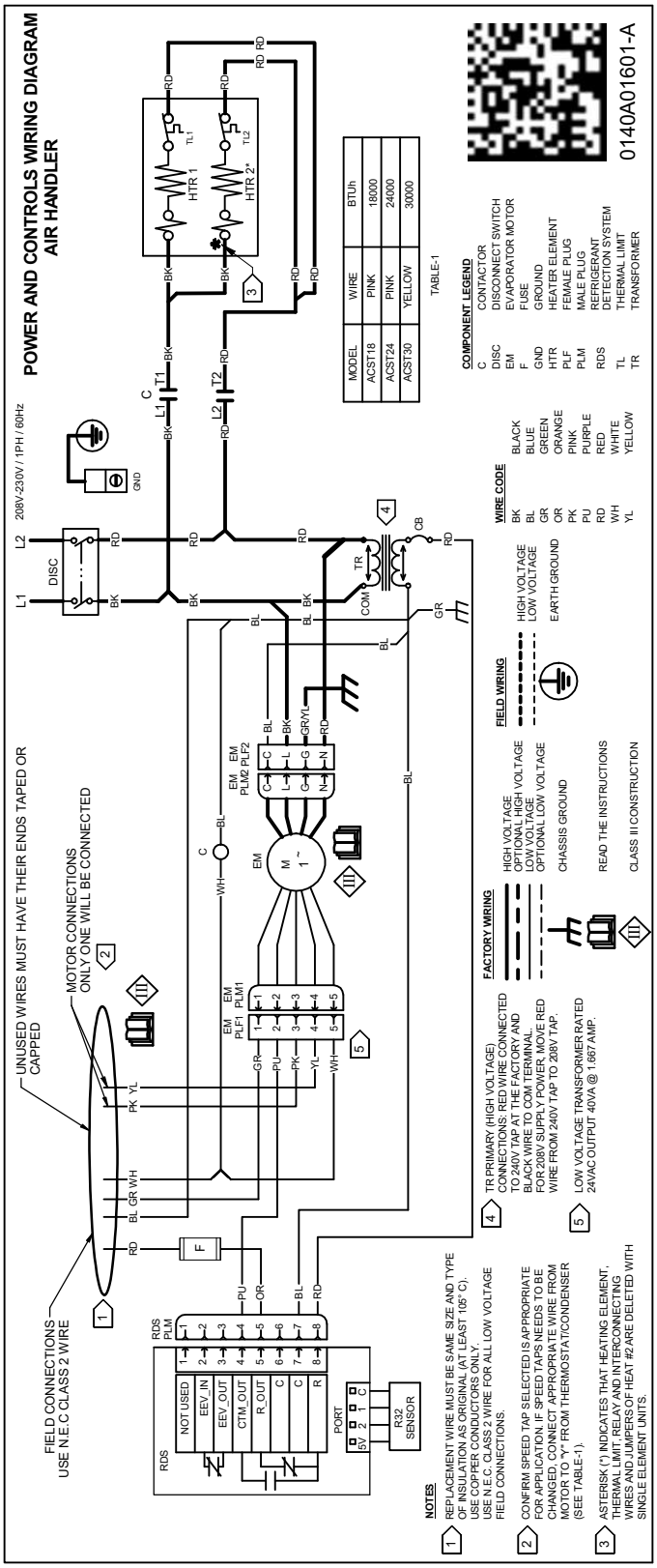

Wiring is subject to change. Always refer to the wiring diagram on the unit for the most up-to-date wiring.

WARNING

HIGH VOLTAGE!
DISCONNECT ALL POWER BEFORE SERVICING OR INSTALLING THIS UNIT. MULTIPLE POWER SOURCES MAY BE PRESENT. FAILURE TO DO SO MAY CAUSE PROPERTY DAMAGE, PERSONAL INJURY OR DEATH.

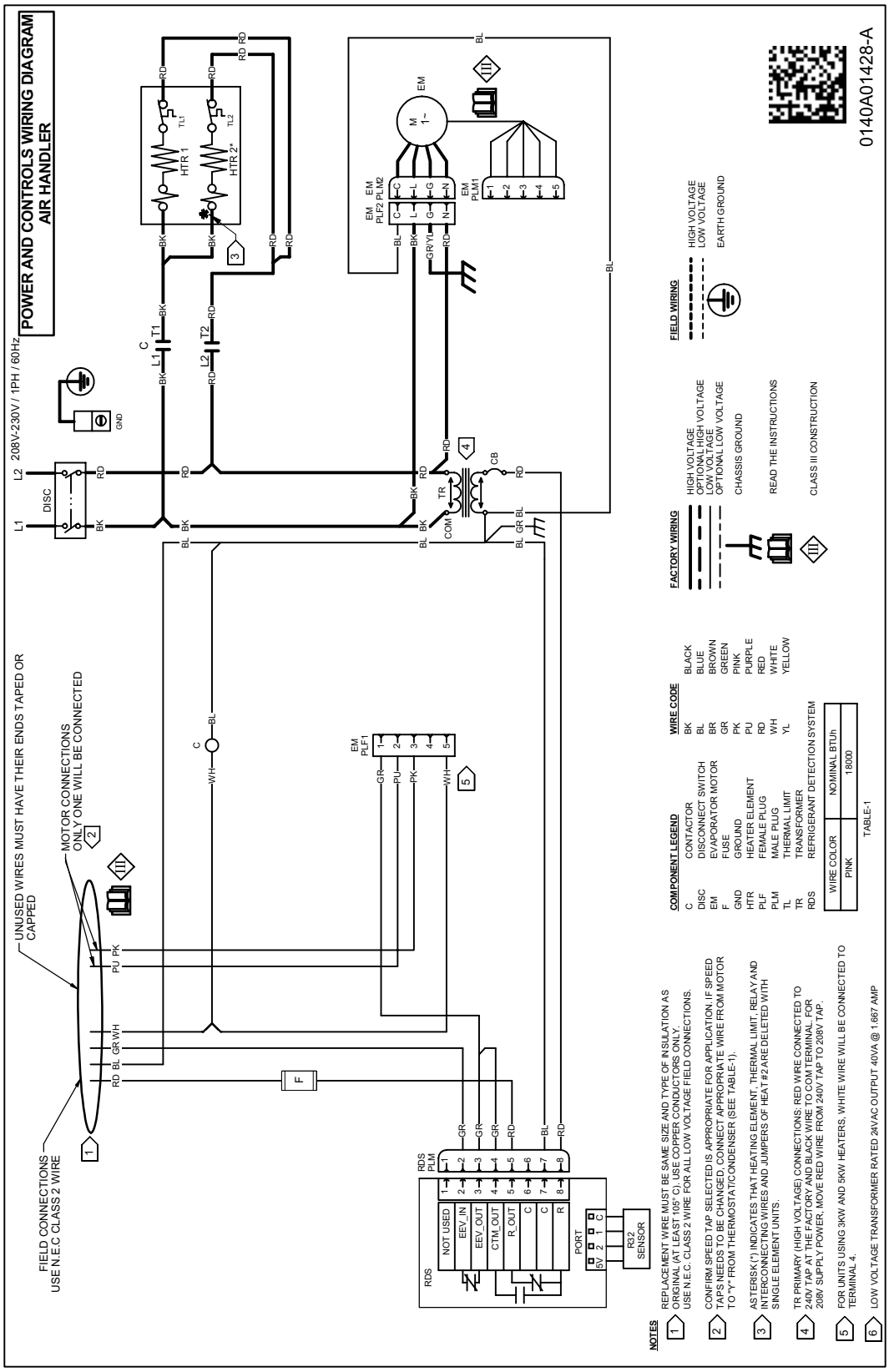

Wiring is subject to change. Always refer to the wiring diagram on the unit for the most up-to-date wiring.

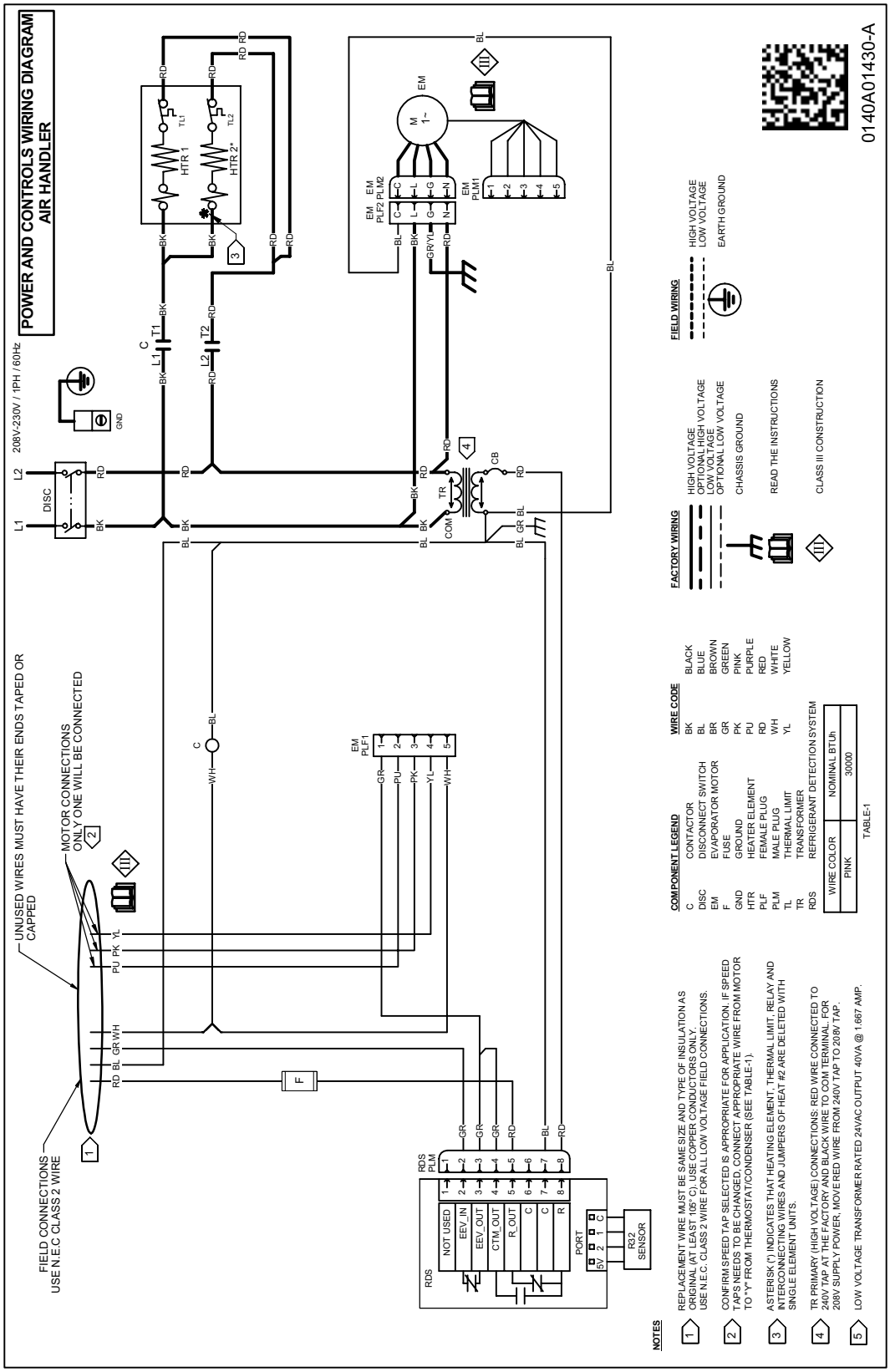

Wiring is subject to change. Always refer to the wiring diagram on the unit for the most up-to-date wiring.

WARNING

HIGH VOLTAGE!
DISCONNECT ALL POWER BEFORE SERVICING OR INSTALLING THIS UNIT. MULTIPLE POWER SOURCES MAY BE PRESENT. FAILURE TO DO SO MAY CAUSE PROPERTY DAMAGE, PERSONAL INJURY OR DEATH.

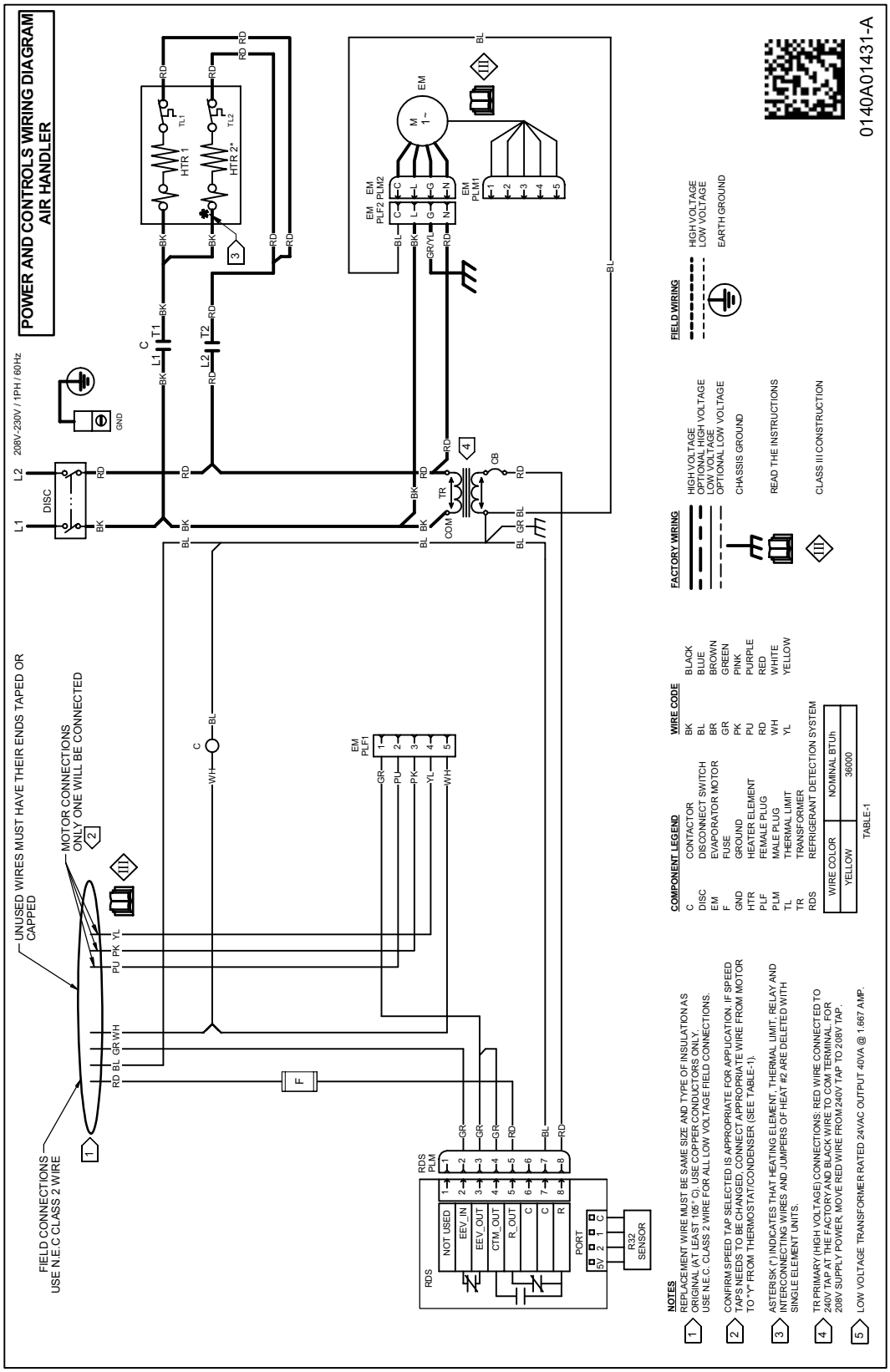

Wiring is subject to change. Always refer to the wiring diagram on the unit for the most up-to-date wiring.

WIRING DIAGRAMS

ALXS3NN3610AA-ALXS3NN6010AA/
GLXS3BN3610AA-GLXS3BN6010AA/
GLXS4BA3610AA-GLXS4BA6010AA/
GLXS4MA1810AA-GLXS4MA3610AA/
VLXS3BN3610AA-VLXS3BN6010AA/
VLXS4BA3610AA-VLXS4BA6010AA

WARNING

HIGH VOLTAGE!
DISCONNECT ALL POWER BEFORE SERVICING OR INSTALLING THIS UNIT. MULTIPLE POWER SOURCES MAY BE PRESENT. FAILURE TO DO SO MAY CAUSE PROPERTY DAMAGE, PERSONAL INJURY OR DEATH.

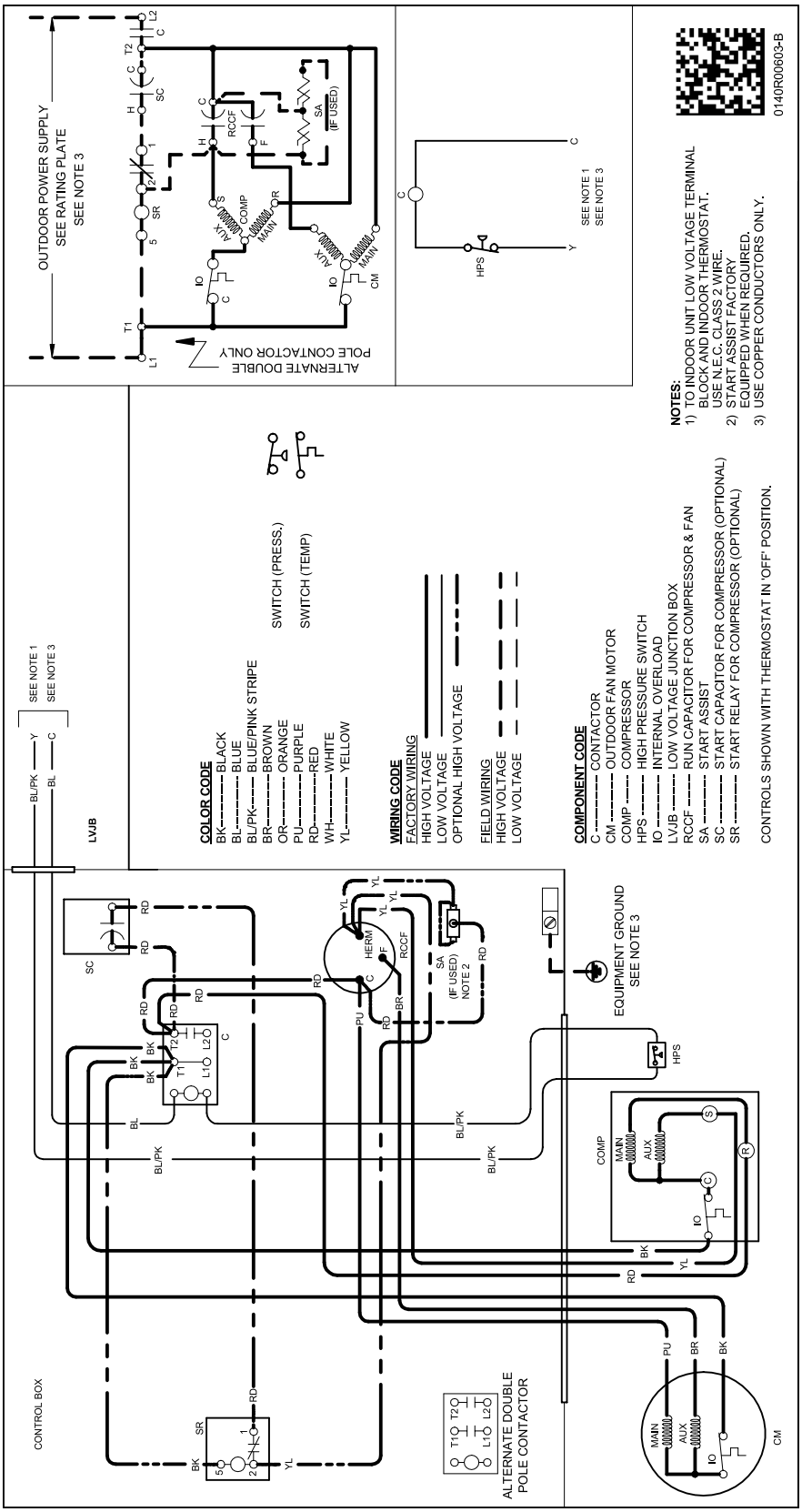

Wiring is subject to change. Always refer to the wiring diagram on the unit for the most up-to-date wiring.

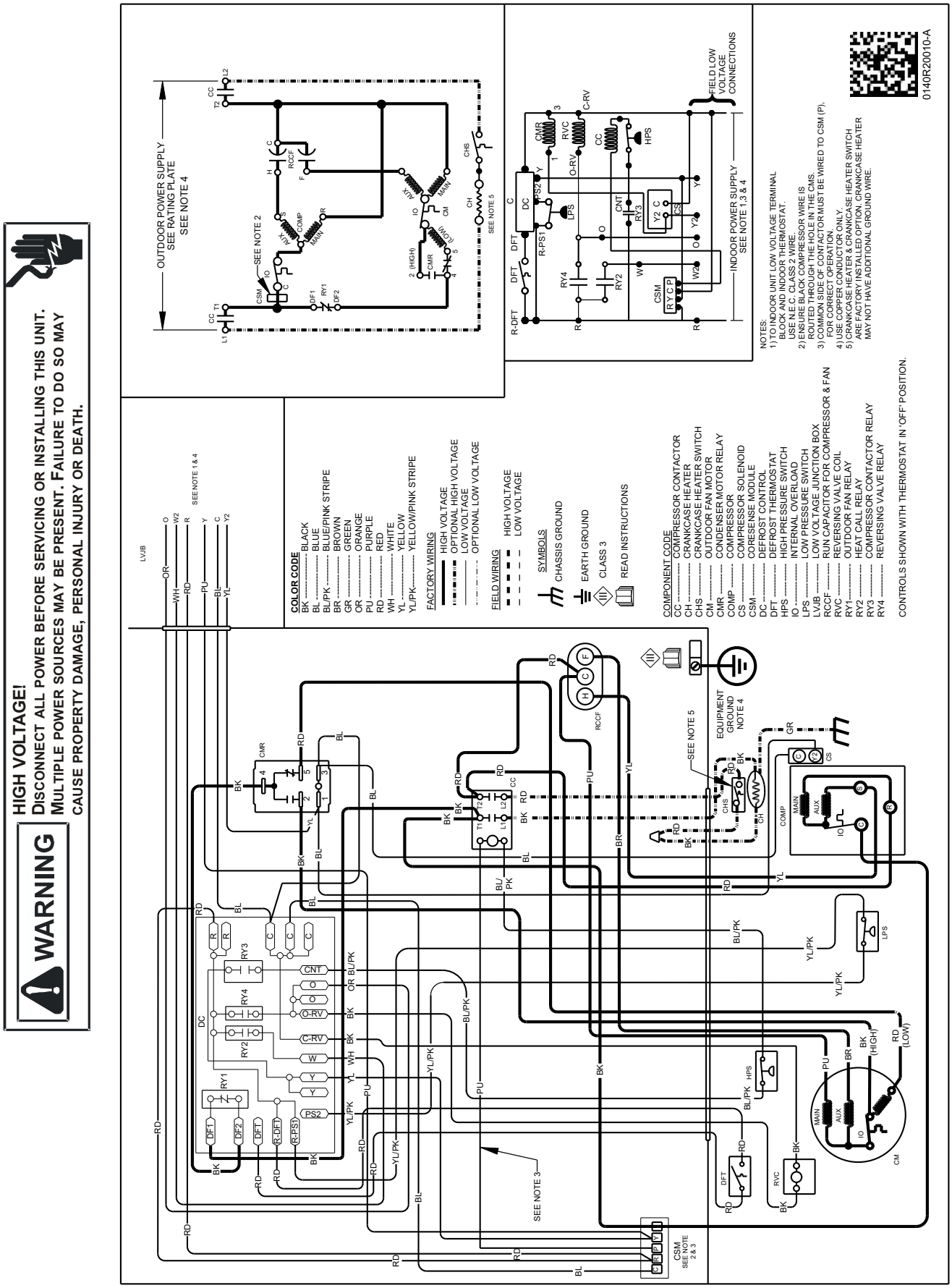

Wiring is subject to change. Always refer to the wiring diagram on the unit for the most up-to-date wiring.

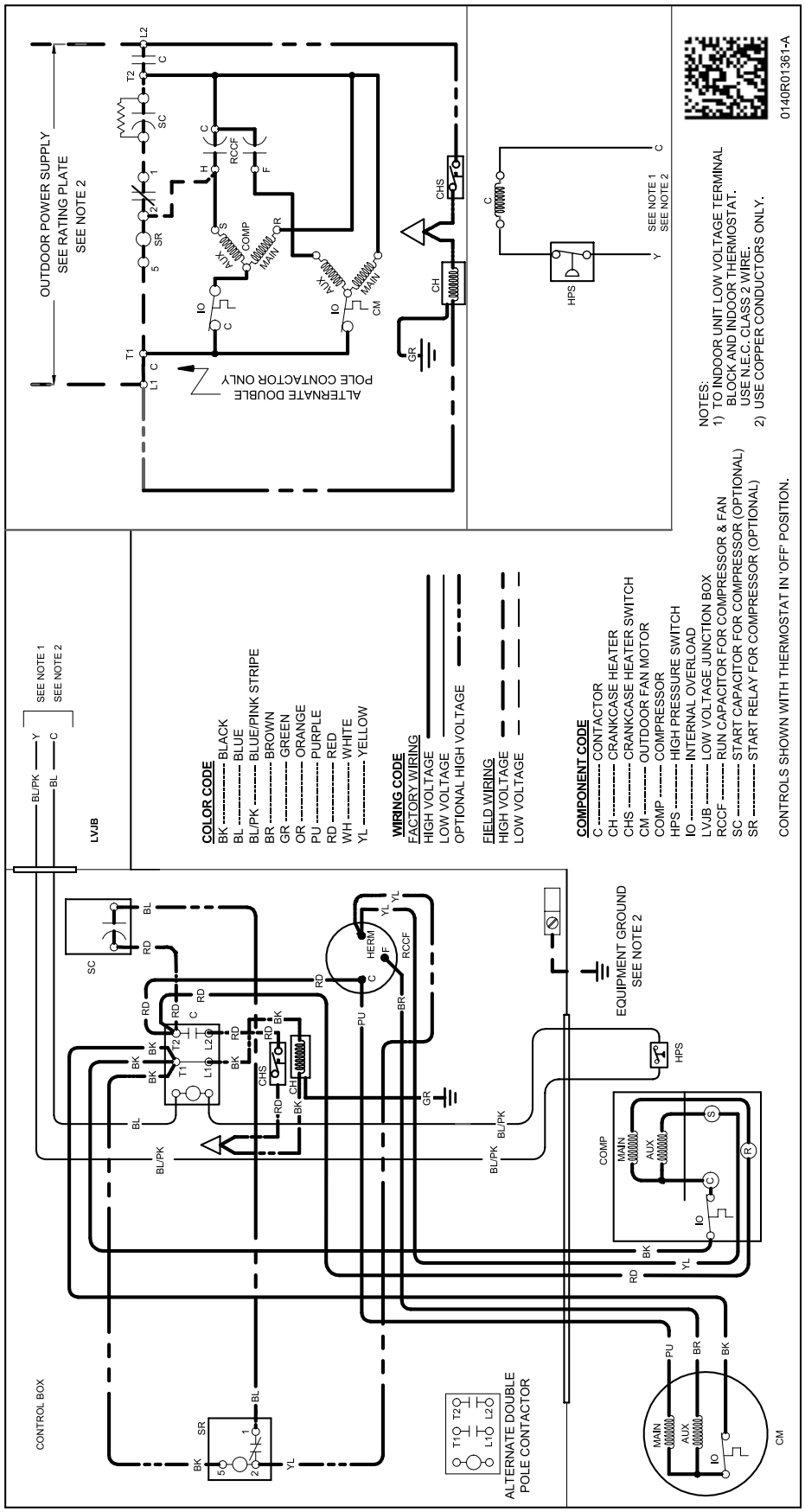

Wiring is subject to change. Always refer to the wiring diagram on the unit for the most up-to-date wiring.

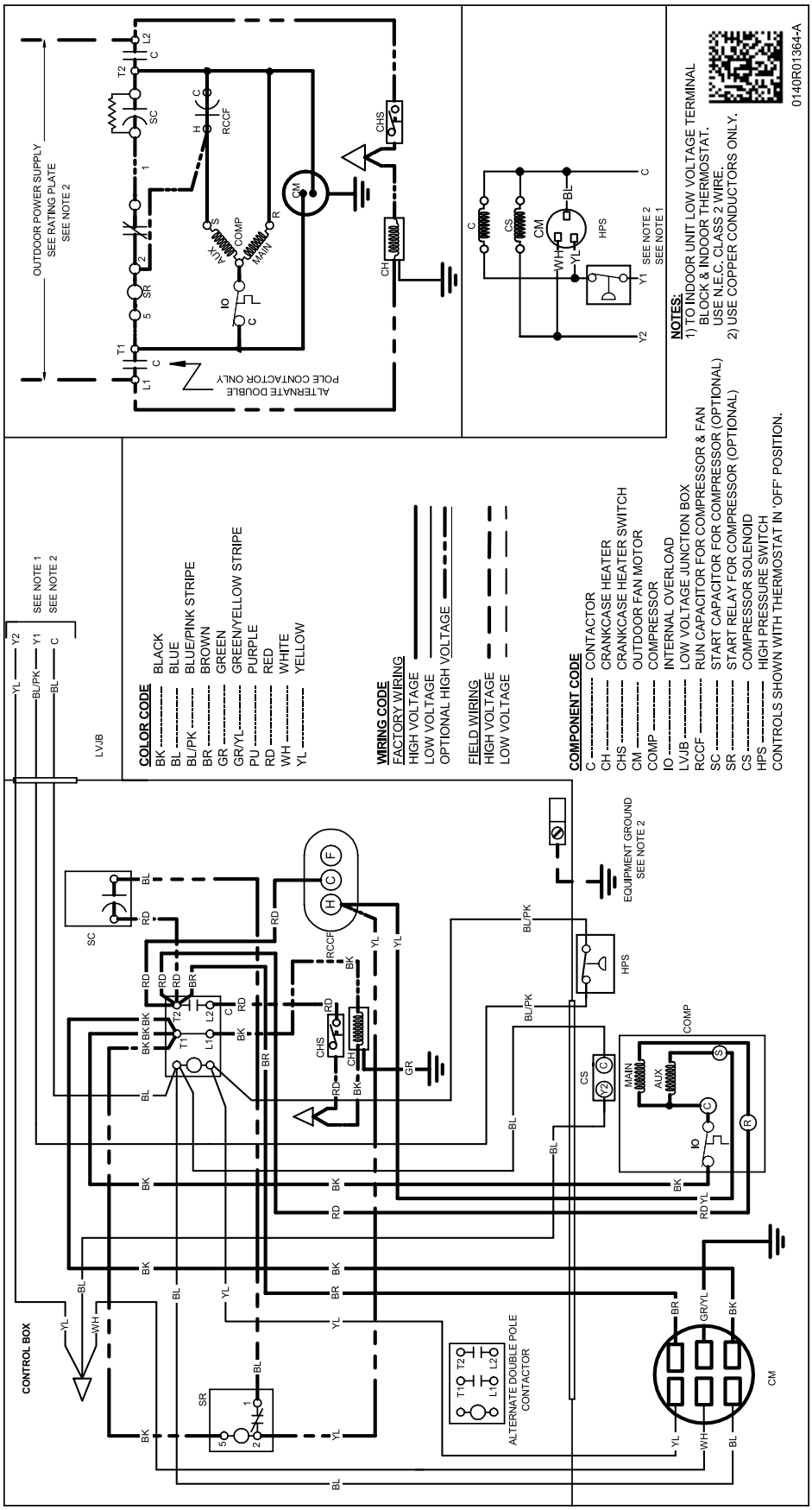

Wiring is subject to change. Always refer to the wiring diagram on the unit for the most up-to-date wiring.

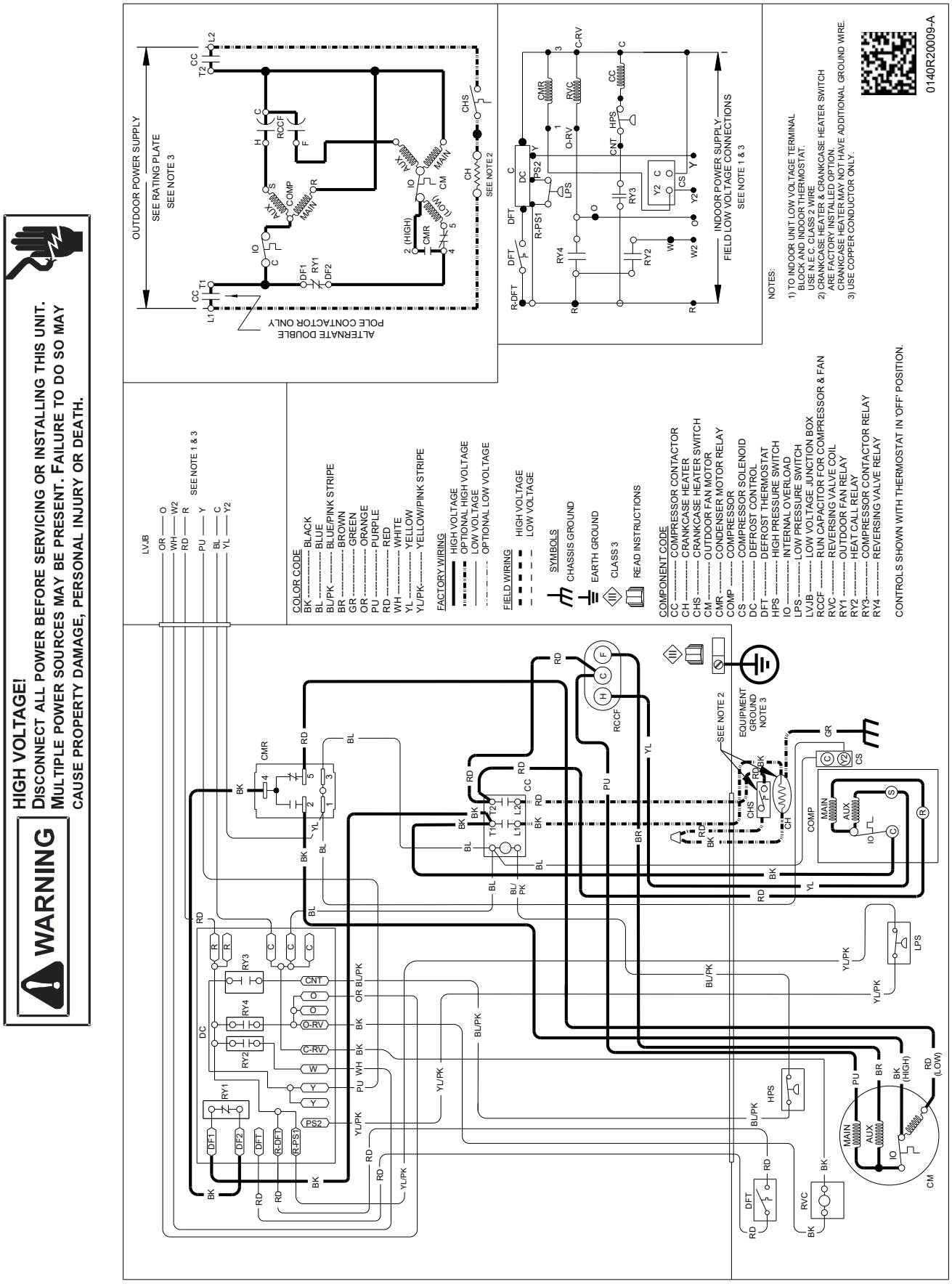

Wiring is subject to change. Always refer to the wiring diagram on the unit for the most up-to-date wiring.

WIRING DIAGRAMS

ALXS3NN1810AA-ALXS3NN3010AA/
ALXS4NA1810AA-ALXS4NA3010AA/
GLXS3BN1810AA-GLXS3BN3010AA/
GLXS4BA1810AA-GLXS4BA3010AA/
VLXS3BN1810AA-VLXS3BN3010AA/
VLXS4BA1810AA-VLXS4BA3010AA

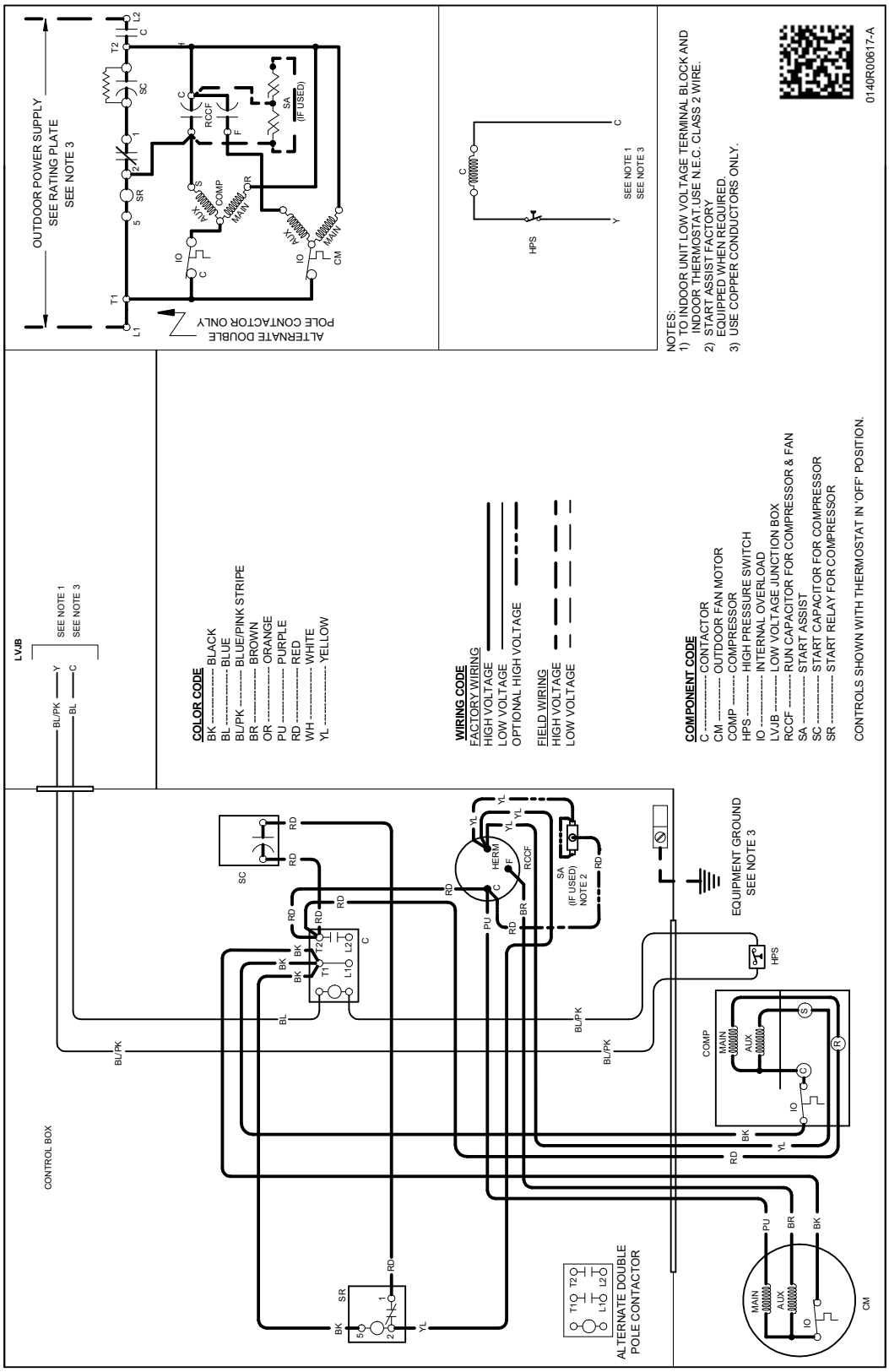

Wiring is subject to change. Always refer to the wiring diagram on the unit for the most up-to-date wiring.

WARNING

HIGH VOLTAGE!
DISCONNECT ALL POWER BEFORE SERVICING OR INSTALLING THIS UNIT. MULTIPLE POWER SOURCES MAY BE PRESENT. FAILURE TO DO SO MAY CAUSE PROPERTY DAMAGE, PERSONAL INJURY OR DEATH.

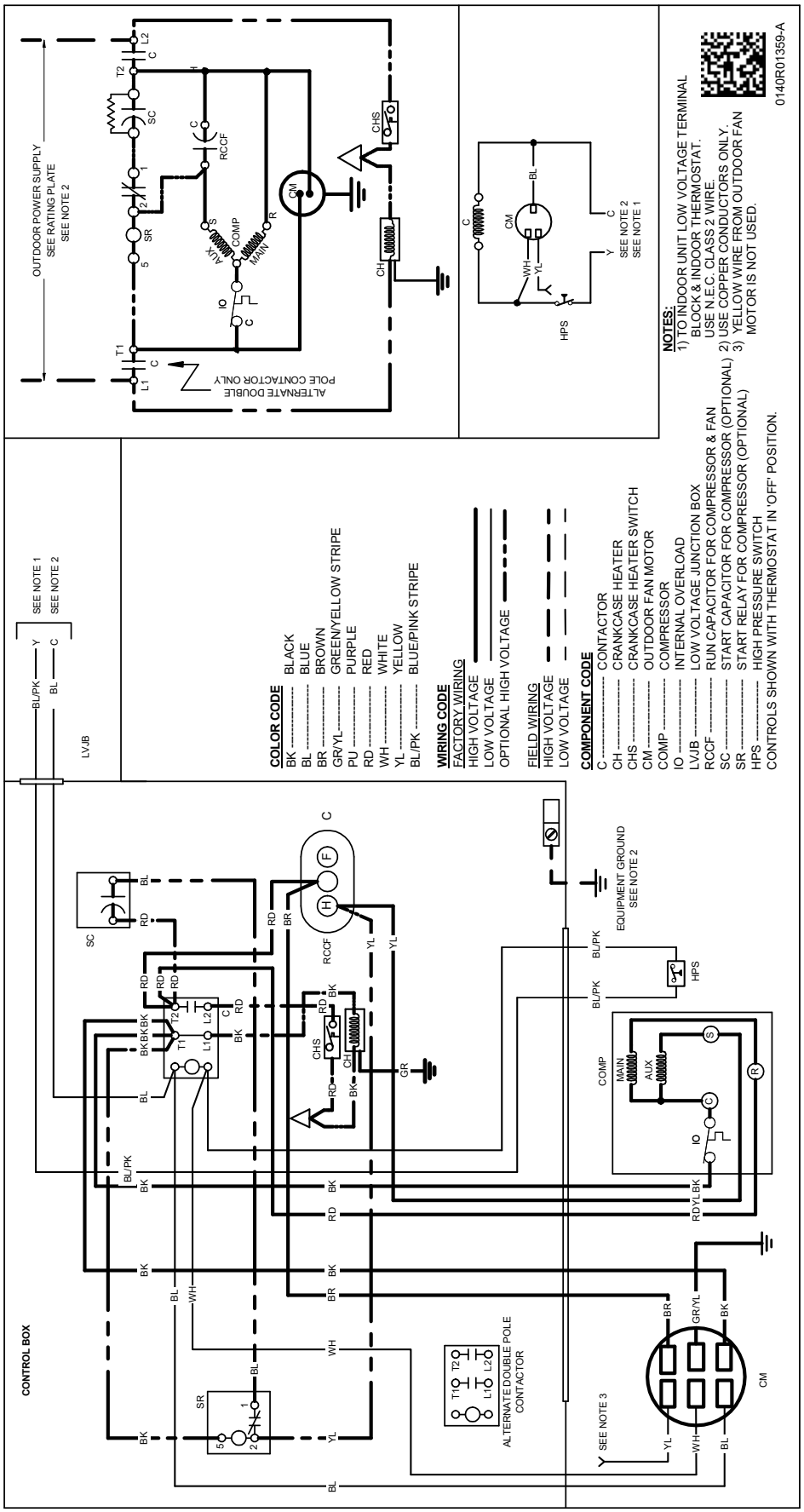

Wiring is subject to change. Always refer to the wiring diagram on the unit for the most up-to-date wiring.

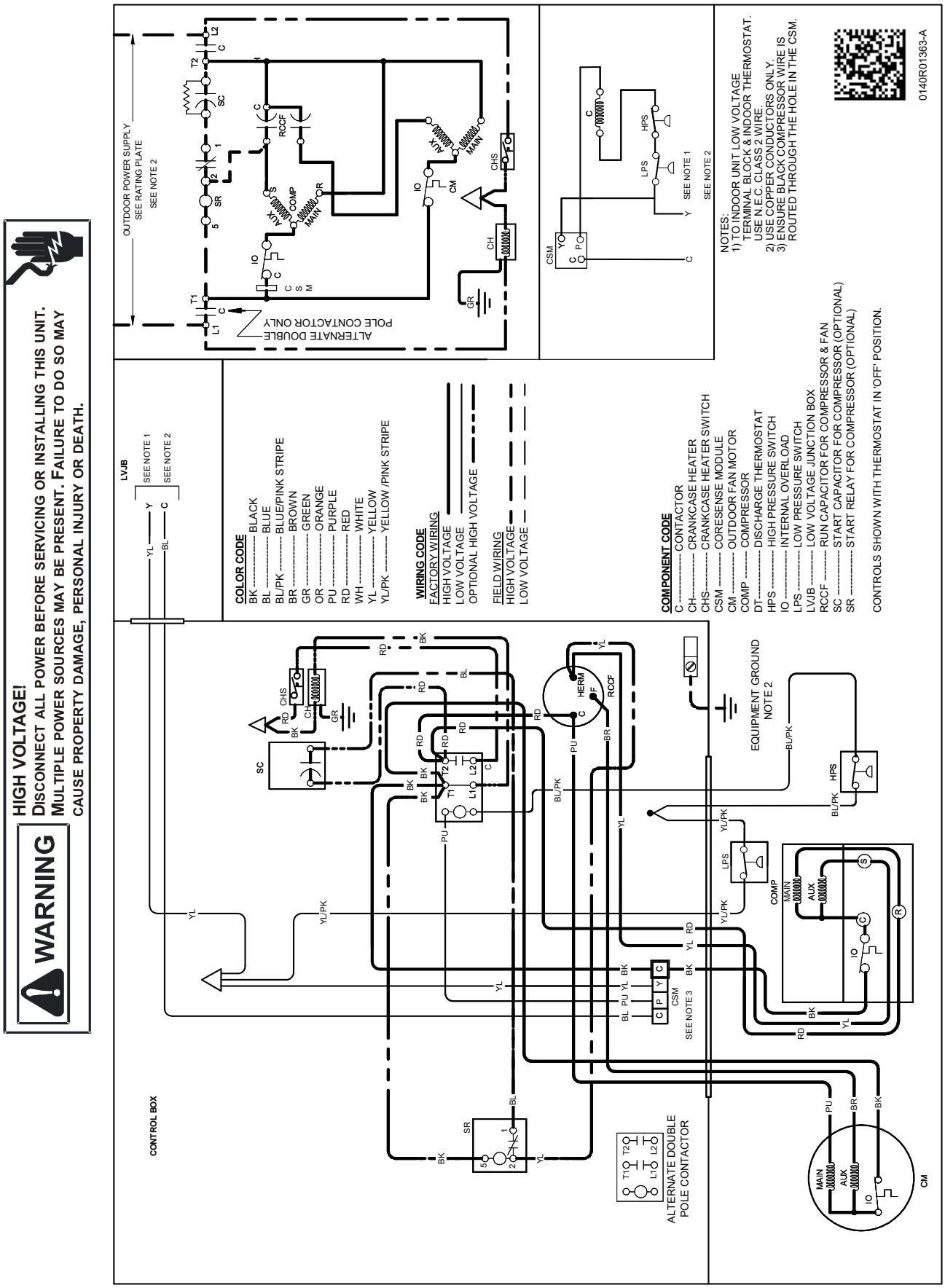

Wiring is subject to change. Always refer to the wiring diagram on the unit for the most up-to-date wiring.