Service Instructions

ComfortNet™

ASXC, DSXC, and GSXC Condensing Units, ASZC, DSZC and GSZC Split System Heat Pumps with R-410A Refrigerant Blowers, Coils, & Accessories

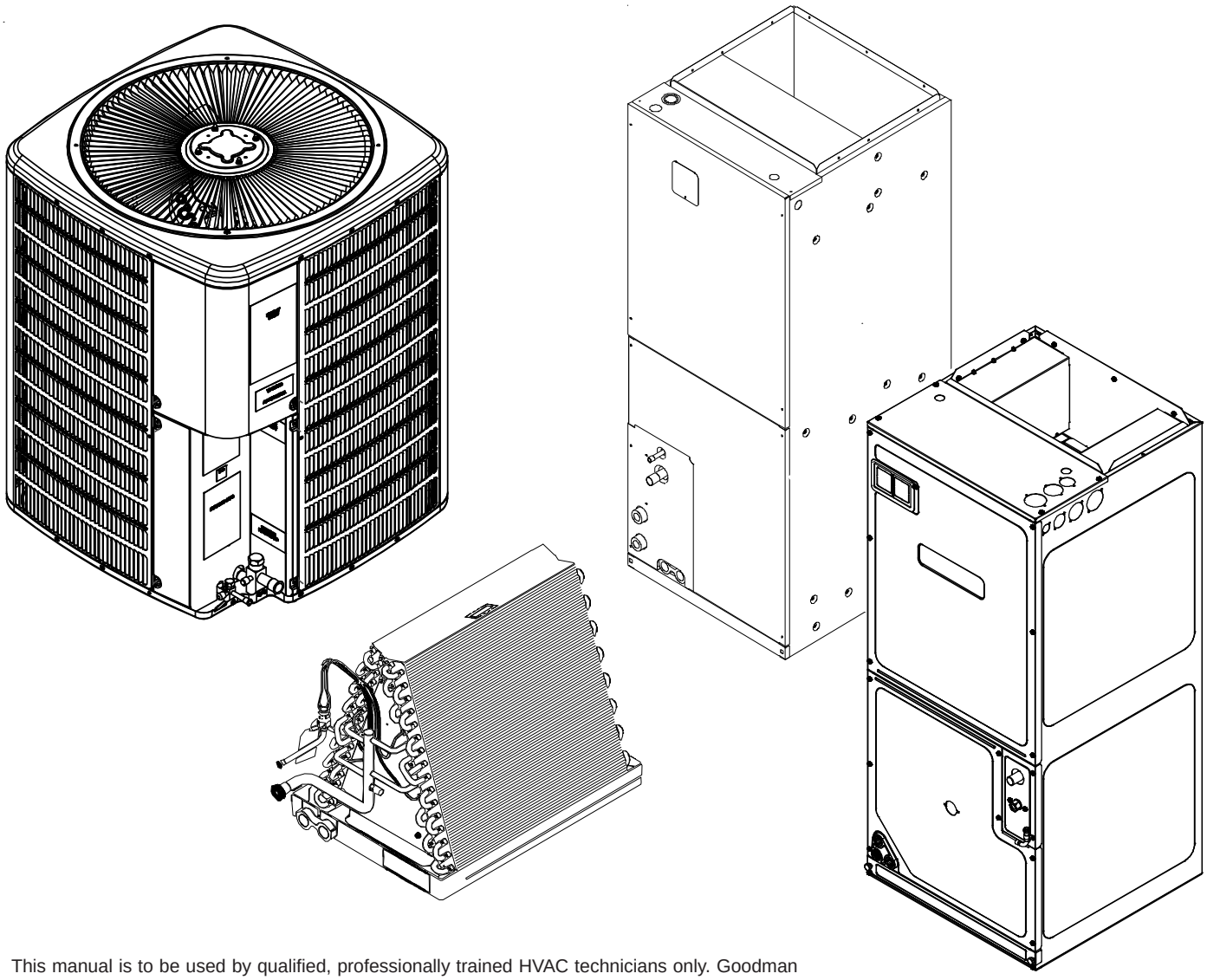

This manual is to be used by qualified, professionally trained HVAC technicians only. Goodman does not assume any responsibility for property damage or personal injury due to improper service procedures or services performed by an unqualified person.

RS6200007r17
April 2018

Copyright © 2015-2018 Goodman Manufacturing Company, L.P.

Amana is a registered trademark of Maytag Corporation or its related companies and is used under license to Goodman Company, L.P., Houston, TX. All rights reserved.

Table of Contents

IMPORTANT INFORMATION 3
PRODUCT IDENTIFICATION 4
ACCESSORIES 21
PRODUCT DESIGN 28
SYSTEM OPERATION 31
TROUBLESHOOTING CHART 35
SERVICING TABLE OF CONTENTS 36
SERVICING 37
ACCESSORIES WIRING DIAGRAMS 102

IMPORTANT INFORMATION

Pride and workmanship go into every product to provide our customers with quality products. It is possible, however, that during its lifetime a product may require service. Products should be serviced only by a qualified service technician who is familiar with the safety procedures required in the repair and who is equipped with the proper tools, parts, testing instruments and the appropriate service manual. **REVIEW ALL SERVICE INFORMATION IN THE APPROPRIATE SERVICE MANUAL BEFORE BEGINNING REPAIRS.**

IMPORTANT NOTICES FOR CONSUMERS AND SERVICERS

RECOGNIZE SAFETY SYMBOLS, WORDS AND LABELS

WARNING

THIS UNIT SHOULD NOT BE CONNECTED TO. OR USED IN CONJUNCTION WITH, ANY DEVICES THAT ARE NOT DESIGN CERTIFIED FOR USE WITH THIS UNIT OR HAVE NOT BEEN TESTED AND APPROVED BY THE MANUFACTURER. SERIOUS PROPERTY DAMAGE OR PERSONAL INJURY, REDUCED UNIT PERFORMANCE AND/OR HAZARDOUS CONDITIONS MAY RESULT FROM THE USE OF DEVICES THAT HAVE NOT BEEN APPROVED OR CERTIFIED BY THE MANUFACTURER.

WARNING

TO PREVENT THE RISK OF PROPERTY DAMAGE, PERSONAL INJURY, OR DEATH, DO NOT STORE COMBUSTIBLE MATERIALS OR USE GASOLINE OR OTHER FLAMMABLE LIQUIDS OR VAPORS IN THE VICINITY OF THIS APPLICANCE.

WARNING

HIGH VOLTAGE
DISCONNECT ALL POWER BEFORE SERVICING OR INSTALLING UNIT. MULTIPLE POWER SOURCES MAY BE PRESENT. FAILURE TO DO SO MAY CAUSE PROPERTY DAMAGE, PERSONAL INJURY OR DEATH.

WARNING

ONLY PERSONNEL THAT HAVE BEEN TRAINED TO INSTALL, ADJUST, SERVICE OR REPAIR (HEREINAFTER, "SERVICE") THE EQUIPMENT SPECIFIED IN THIS MANUAL SHOULD SERVICE THE EQUIPMENT. THE MANUFACTURER WILL NOT BE RESPONSIBLE FOR ANY INJURY OR PROPERTY DAMAGE ARISING FROM IMPROPER SERVICE OR SERVICE PROCEDURES. IF YOU SERVICE THIS UNIT, YOU ASSUME RESPONSIBILITY FOR ANY INJURY OR PROPERTY DAMAGE WHICH MAY RESULT. IN ADDITION, IN JURISDICTIONS THAT REQUIRE ONE OR MORE LICENSES TO SERVICE THE EQUIPMENT SPECIFIED IN THIS MANUAL, ONLY LICENSED PERSONNEL SHOULD SERVICE THE EQUIPMENT. IMPROPER INSTALLATION, ADJUSTMENT, SERVICING OR REPAIR OF THE EQUIPMENT SPECIFIED IN THIS MANUAL, OR ATTEMPTING TO INSTALL, ADJUST, SERVICE OR REPAIR THE EQUIPMENT SPECIFIED IN THIS MANUAL WITHOUT PROPER TRAINING MAY RESULT IN PRODUCT DAMAGE, PROPERTY DAMAGE, PERSONAL INJURY OR DEATH.

To locate an authorized servicer, please consult your telephone book or the dealer from whom you purchased this product. For further assistance, please contact:

CONSUMER INFORMATION LINE

GOODMAN® BRAND PRODUCTS
TOLL FREE
1-877-254-4729 (U.S. only)
email us at: **customerservice@goodmanmfg.com**
fax us at: **(713) 856-1821**
(Not a technical assistance line for dealers.)

AMANA® BRAND PRODUCTS
TOLL FREE
1-877-254-4729 (U.S. only)
email us at: **customerservice@goodmanmfg.com**
fax us at: **(713) 856-1821**
(Not a technical assistance line for dealers.)

Outside the U.S., **call 1-713-861-2500.**
(Not a technical assistance line for dealers.) Your telephone company will bill you for the call.

Amana is a registered trademark of Maytag Corporation or its related companies and is used under license to Goodman Company, L.P., Houston, TX. All rights reserved.

IMPORTANT INFORMATION

SAFE REFRIGERANT HANDLING

While these items will not cover every conceivable situation, they should serve as a useful guide.

WARNING

REFRIGERANTS ARE HEAVIER THAN AIR. THEY CAN "PUSH OUT" THE OXYGEN IN YOUR LUNGS OR IN ANY ENCLOSED SPACE. TO AVOID POSSIBLE DIFFICULTY IN BREATHING OR DEATH:

- NEVER PURGE REFRIGERANT INTO AN ENCLOSED ROOM OR SPACE. BY LAW, ALL REFRIGERANTS MUST BE RECLAIMED.
- IF AN INDOOR LEAK IS SUSPECTED, THOROUGHLY VENTILATE THE AREA BEFORE BEGINNING WORK.
- LIQUID REFRIGERANT CAN BE VERY COLD. TO AVOID POSSIBLE FROST-BITE OR BLINDNESS, AVOID CONTACT WITH REFRIGERANT AND WEAR GLOVES AND GOGGLES. IF LIQUID REFRIGERANT DOES CONTACT YOUR SKIN OR EYES, SEEK MEDICAL HELP IMMEDIATELY.
- ALWAYS FOLLOW EPA REGULATIONS. NEVER BURN REFRIGERANT, AS POISONOUS GAS WILL BE PRODUCED.

WARNING

THE UNITED STATES ENVIRONMENTAL PROTECTION AGENCY ("EPA") HAS ISSUED VARIOUS REGULATIONS REGARDING THE INTRODUCTION AND DISPOSAL OF REFRIGERANTS INTRODUCED INTO THIS UNIT. FAILURE TO FOLLOW THESE REGULATIONS MAY HARM THE ENVIRONMENT AND CAN LEAD TO THEH IMPOSITION OF SUBSTANTIAL FINES. THESE REGULATIONS MAY VARY BY JURISDICTION. SHOULD QUESTIONS ARISE, CONTACT YOUR LOCAL EPA OFFICE.

WARNING

TO AVOID POSSIBLE EXPLOSION:

- NEVER APPLY FLAME OR STEAM TO A REFRIGERANT CYLINDER. IF YOU MUST HEAT A CYLINDER FOR FASTER CHARGING, PARTIALLY IMMERSE IT IN WARM WATER.
- NEVER FILL A CYLINDER MORE THAN 80% FULL OF LIQUID REFRIGERANT.
- NEVER ADD ANYTHING OTHER THAN R-22 TO AN R-22 CYLINDER OR R-410A TO AN R-410A CYLINDER. THE SERVICE EQUIPMENT USED MUST BE LISTED OR CERTIFIED FOR THE TYPE OF REFRIGERANT USED.
- STORE CYLINDERS IN A COOL, DRY PLACE. NEVER USE A CYLINDER AS A PLATFORM OR A ROLLER.

WARNING

TO AVOID POSSIBLE EXPLOSION, USE ONLY RETURNABLE (NOT DISPOSABLE) SERVICE CYLINDERS WHEN REMOVING REFRIGERANT FROM A SYSTEM.

- ENSURE THE CYLINDER IS FREE OF DAMAGE WHICH COULD LEAD TO A LEAK OR EXPLOSION.
- ENSURE THE HYDROSTATIC TEST DATE DOES NOT EXCEED 5 YEARS.
- ENSURE THE PRESSURE RATING MEETS OR EXCEEDS 400 LBS.

WHEN IN DOUBT, DO NOT USE CYLINDER.

WARNING

TO AVOID POSSIBLE INJURY, EXPLOSION OR DEATH, PRACTICE SAFE HANDLING OF REFRIGERANTS.

WARNING

SYSTEM CONTAMINANTS, IMPROPER SERVICE PROCEDURE AND/OR PHYSICAL ABUSE AFFECTING HERMETIC COMPRESSOR ELECTRICAL TERMINALS MAY CAUSE DANGEROUS SYSTEM VENTING.

The successful development of hermetically sealed refrigeration compressors has completely sealed the compressor's moving parts and electric motor inside a common housing, minimizing refrigerant leaks and the hazards sometimes associated with moving belts, pulleys or couplings.

Fundamental to the design of hermetic compressors is a method whereby electrical current is transmitted to the compressor motor through terminal conductors which pass through the compressor housing wall. These terminals are sealed in a dielectric material which insulates them from the housing and maintains the pressure tight integrity of the hermetic compressor. The terminals and their dielectric embedment are strongly constructed, but are vulnerable to careless compressor installation or maintenance procedures and equally vulnerable to internal electrical short circuits caused by excessive system contaminants.

In either of these instances, an electrical short between the terminal and the compressor housing may result in the loss of integrity between the terminal and its dielectric embedment. This loss may cause the terminals to be expelled, thereby venting the vaporous and liquid contents of the compressor housing and system.

A venting compressor terminal normally presents no danger to anyone, providing the terminal protective cover is properly in place.

If, however, the terminal protective cover is not properly in place, a venting terminal may discharge a combination of

(a) hot lubricating oil and refrigerant

(b) flammable mixture (if system is contaminated with air)

in a stream of spray which may be dangerous to anyone in the vicinity. Death or serious bodily injury could occur.

Under no circumstances is a hermetic compressor to be electrically energized and/or operated without having the terminal protective cover properly in place.

See Service Section S-17 for proper servicing.

PRODUCT IDENTIFICATION

ComfortNet™

A S X C 16 024 1 AA

1 2 3 4,5 6 6 7 8,9

Brand

A - Amana® brand

D - Deluxe Goodman® brand

G - Goodman® brand

Type

S Split System

Type

C: Condenser R-22

H: Heat Pump R-22

X: Condenser R-410A

Z: Heat Pump R-410A

Communication Feature

C: 4-Wire Communication Ready

SEER

16 - 16 SEER

18 - 18 SEER

Engineering

Major/Minor Revisions

Voltage

1 - 208/230V Single-Phase 60 Hz

3 - 208/230V Three-Phase 60 Hz

4 - 460V Three-Phase 60 Hz

Nominal Capacity

024 - 2 Tons

036 - 3 Tons

048 - 4 Tons

060 - 5 Tons

PRODUCT IDENTIFICATION

ComfortNet™

C A P F 1824 A 6 AA

1 2 3 4 5,6,7,8 9 10 11,12

Brand

C Indoor Coil

Unit Application

A Upflow/Downflow Coil

H Horizontal A-Coil

S Horizontal Slab Coil

T Coated Coils

Cabinet Finish

U Unpainted

P Painted

N Unpainted Case

Expansion Device

F Flowrator

T Factory-Installed Non-Adjustable Expansion Valve

Engineering*

Major/Minor Revisions

Refrigerant Charge

2 = R-22

4 = R-410A

6 = R-410A or R-22

Nominal Width for Gas Furnace

A = Fits 14" Furnace Cabinet

B = Fits 17-1/2" Furnace Cabinet

C = Fits 21" Furnace Cabinet

D = Fits 24-1/2" Furnace Cabinet

N = Does Not Apply (Horizontal Slab Coils

Nominal Capacity @ 13 SEER

1824 =	1-1/2 - 2 Tons
3030 =	2-1/2 Tons
3131 =	2-1/2 Tons
3636 =	3 Tons
3642 =	3 - 3-1/2 Tons
3743 =	3 - 3-1/2 Tons
4860 =	4 - 5 Tons
4961 =	4 - 5 Tons

PRODUCT IDENTIFICATION

ComfortNet™

MB	V	C	12	00	A	A	1
1,2	3	4	4	5,6	7	8	9

Brand

MB - Modular Blower

Type

V: Speed

Communication Feature

C: 4-Wire Communication Ready

Airflow

12: 1200 CFM

16: 1600 CFM

20: 2000 CFM

Factory Heat

00 No Heat

Circuit Breaker

A: No Circuit Breaker

B: Circuit Breaker

Design Series

A: First Series

Electrical

1: 208-230V/60Hz/1 PH

PRODUCT IDENTIFICATION

ComfortNet™

A	V	P	T	C	1830	1	6	AA
1	2	3	4	5	6,7,8,9	11	12	13,14

Brand

A Airhandler

Unit Application

V Variable Speed Motor

Cabinet Finish

U: Unpainted

P: Painted

N: Uncased

Expansion Device

F: Flowrator

T: Expansion Valve

Communications

C: 4-Wire Communication Ready

Engineering*

Major/Minor Revisions

Refrigerant Charge

No Digit = R-22 Only

6 = R-410A or R-22

Electrical

1 208/240V, 1 Phase, 60 Hz

Nominal Capacity

Multi-Position & Downflow Applications

1830 = 1-1/2 to 2-1/2 Tons

3137 = 3 Tons

Ceiling Mount & Wall Mount Applications

4260 = 3-1/2 to 5 Tons

PRODUCT IDENTIFICATION

ComfortNet™

A	V	P	T	C	18	B	1	4	AA
1	2	3	4	5	6,7	8	9	10	11,12

Brand

A Single Piece Airhandler

Unit Application

C Ceiling Mount PSC Motor
R Multi Position PSC Motor
S Multi Position EEM Motor
W Wall Mount PSC/EEM Motor
V Multi Position Variable Speed Motor - Communicating

Cabinet Finish

U Unpainted
P Painted
N Uncased

Expansion Device

F Flowrator
T Expansion Valve

Communications

C ComfortNet™ Compatible

Engineering*

Major/Minor Revisions
*Not used for inventory management

Refrigerant Charge

4 = R-410a

Electrical

1 208/240V, 1 Phase, 60 Hz

Cabinet Width

B = 17-1/2"
C = 21"
D = 24-1/2"

Nominal Capacity

18 = 1-1/2 Tons
24 = 2 Tons
25 = 2 Tons
29 = 2 Tons
30 = 2-1/2 Tons
31 = 2 Tons
33 = 1 1/2 - 2 Tons
36 = 3 Tons
37 = 2 1/2 - 3 1/2 Tons
39 = 2 1/2 - 3 Tons
42 = 3-1/2 Tons
48 = 4 Tons
49 = 3 - 3 1/2 Tons
59 = 4 - 5 Tons
60 = 5 Tons
61 = 4 - 5 Tons

All Airhandlers use **DIRECT DRIVE MOTORS**. Power supply is AC 208-230v, 60 hz, 1 phase.

PRODUCT IDENTIFICATION

ASXC16 **A**MANA® BRAND **S**PLIT **X-C**OMMUNICATING CONDENSERS R-410A 16 SEER	
Model/Rev	**Description**
ASXC160**1AA	Introduces Amana® brand 2-stage 16 SEER condensing units with R-410A, communicating models.
ASXC160601BA	Use ZPS49 compressor.
ASXC160481BA	SmartCoil® coils
ASXC160(24/36)1BB	Wiring diagram updated with notes.
ASXC160(48-60)1BB	Motor changed to Nidec.
ASXC160(24/36)1BC ASXC160(48-60)1BC	Ultratech® 2.0 compressor change.
ASXC160(24/36)1BD ASXC160(48-60)1BD	Replaced PCBHR103 Communicating Heat Pump Control Board with PCBHR104 Communicating Heat Pump Control Board.
ASXC160(241, 481)BE	Refrigerant charge reduction
ASXC160(24,36,48,60)1CA	16 SEER 2-Stage AC Development with improved performance.

ASXC18 **A**MANA® BRAND **S**PLIT **X-C**OMMUNICATING CONDENSERS R-410A 18 SEER	
Model/Rev	**Description**
ASXC18**1AA	Initial release of Amana® brand 2-stage 18 SEER condensing units with R-410A, communicating models.
ASXC180(36/48/60)1AB	Wiring diagram updated with notes.
ASXC180(36/48-60)1AC	Replaced compressors ZPS20K4EPFV230 with ZPS20K5EPFV130 and compressor ZPS30K4EPFV230 with ZPS30K5EPFV130.
ASXC180(36/48/60)1AD	Replaced PCBHR103 Communicating Heat Pump Control Board with PCBHR104 Communicating Heat Pump Control Board.
ASXC180481BB	[Design Improvement]: Updating shared data for 18 SEER, 2-stage, 4 ton AC in communicating installations. Releasing minor revision for affected models

PRODUCT IDENTIFICATION

GSXC16 **G**OODMAN® BRAND **S**PLIT **X-C**OMMUNICATING CONDENSERS R-410A 16 SEER	
Model/Rev	**Description**
GSXC160(24/36/48/60)1CA	16 SEER 2-Stage AC Development with improved performance.

GSXC18 **G**OODMAN® BRAND **S**PLIT **X-C**OMMUNICATING CONDENSERS R-410A 18 SEER	
Model/Rev	**Description**
GSXC180(24/36/48/60)1BA	18 SEER 2-Stage AC Development with improved performance.
GSXC180481BB	[Design Improvement]: Updating shared data for 18 SEER, 2-stage, 4 ton AC in communicating installations. Releasing minor revision for affected models

PRODUCT IDENTIFICATION

DSXC16 **D**ELUXE **S**PLIT **X-C**OMMUNICATING CONDENSERS R-410A 16 SEER	
Model/Rev	**Description**
DSXC160**1AA	Initial release of Goodman® Deluxe brand 2-stage 16 SEER condensing units with R-410A, communicating models.
DSXC160(24/36)1AB	Wiring diagram updated with notes.
DSXC160(24/36)1AC DSXC160(48-60)1BC	Ultratech® 2.0 compressor.
DSXC160481BA	SmartCoil® coils.
DSXC160601BA	ZPS49K compressor.
DSXC160(48-60)1BB	Motor changed to Nidec.
DSXC160241AF DSXC160481BE	Refrigerant charge reduction

DSXC18 **DELUXE SPLIT X-C**OMMUNICATING CONDENSERS R-410A 18 SEER	
Model/Rev	**Description**
DSXC18**1AA	Initial release of Goodman® Deluxe brand 2-stage 18 SEER condensing units with R-410A, communicating models.
DSXC180(36/48/60]1AB	Wiring diagram updated with notes.
DSXC18036AC	Replaced compressors ZPS20K4EPFV230 with ZPS20K5EPFV130 and compressor ZPS30K4EPFV230 with ZPS30K5EPFV130.
DSXC180(48-60)1AC	Ultratech® 2.0 compressor change.

PRODUCT IDENTIFICATION

ASZC16 AMANA® BRAND SPLIT Z-COMMUNICATING HEAT PUMP R-410A 16 SEER	
Model/Rev	**Description**
ASZC160**1AA	Introduces Amana® brand 2-stage 16 SEER heat pump units with R-410A, communicating models.
ASZC160(24/36)1AB ASZC160(48/60)1AB	Sanhua (RANCO) reversing valves
ASZC160(24-48)1AC ASZC160601BA	Release of models with accumulators and crankcase heaters.
ASZC160(24-36])1AD ASZC160601BB	Motor changed to Nidec.
ASZC160(24-36)1AE	Replaced compressors ZPS20K4EPFV230 with ZPS20K5EPFV130 and compressor ZPS30K4EPFV230 with ZPS30K5EPFV130.
ASZC160481AE	Ultratech® 2.0 compressor change.
ASZC160(24/36)1CA ASZC160(48/60)1CA	Replaced compressors with Copeland's UltraTech™ 3 lineup. Transitioned coils to 7mm. Offers improved performance.

ASZC18 AMANA® BRAND SPLIT Z-COMMUNICATING HEAT PUMPS R-410A 18 SEER	
Model/Rev	**Description**
ASZC180**1AA	Introduces Amana® brand 2-stage 18 SEER heat pump units with R-410A, communicating models.
ASZC180601BC ASZC180601BB	Ultratech® 2.0 compressor change.
ASZC180(36/48/60)1AB	Release of models with accumulators and crankcase heaters.
ASZC180(36-4)]1AC ASZC180601BA ASZC180361AD	Sanhua (RANCO) reversing valves
ASZC180[24/36/48/60]1CA	Replaced compressors with Copeland's UltraTech™ 3 lineup. Transitioned coils to 7mm. Offers improved performance.

PRODUCT IDENTIFICATION

GSZC16 **G**OODMAN® BRAND **S**PLIT **Z-C**OMMUNICATING HEAT PUMP R-410A 16 SEER	
Model/Rev	**Description**
GSZC160[24/36/48/60]1CA	Replaced compressors with Copeland's UltraTech™ 3 lineup. Transitioned coils to 7mm. Offers improved performance.

GSZC18 **G**OODMAN® BRAND **S**PLIT **Z-C**OMMUNICATING HEAT PUMP R-410A 16 SEER	
Model/Rev	**Description**
GSZC180[24/36/48/60]	Replaced compressors with Copeland's UltraTech™ 3 lineup. Transitioned coils to 7mm. Offers improved performance.

PRODUCT IDENTIFICATION

DSZC16 **D**ELUXE **S**PLIT **Z-C**OMMUNICATING HEAT PUMP R-410A 16 SEER	
Model/Rev	**Description**
DSZC16**1AA	Initial release of Goodman® brand Deluxe 2-stage 16 SEER heat pump units with R-410A, communicating models.
DSZC160(24/36)1AB DSZC160(48/60)1AB	Sanhua (RANCO) reversing valves.
DSZC160(24-48)1AC DSZC160601BA	Release of models with accumulators and crankcase heaters.
DSZC160(24-48)]1AD DSZC160601BB DSZC160481AE DSZC160601BC	Ultratech® 2.0 compressor change.
DSZC160(24-36)1AE	Replaced compressors ZPS20K4EPFV230 with ZPS20K5EPFV130 and compressor ZPS30K4EPFV230 with ZPS30K5EPFV130.

DSZC18 **DELUXE SPLIT Z-C**OMMUNICATING HEAT PUMP R-410A 18 SEER	
Model/Rev	**Description**
DSZC18**1AA	Initial release of Goodman® brand Deluxe 2-stage 18 SEER heat pump units with R-410A, communicating models.
DSZC180(36/48/60)1AB	Sanhua (RANCO) reversing valves.
DSZC180361AD	Replaced compressors ZPS20K4EPFV230 with ZPS20K5EPFV130 and compressor ZPS30K4EPFV230 with ZPS30K5EPFV130.
DSZC180(36-48)1AC DSZC180601BA	Release of models with accumulators and crankcase heaters.
DSZC160(24-48)1AD DSZC160601BB	Ultratech® 2.0 compressor change.

AVPTC****14 SINGLE PIECE **A**IR HANDLER MULTIPLE-POSITION **V**ARIABLE SPEED **P**AINTED **T**XV WITH 4-WIRE **C**OMMUNICATING CONTROL	
Model/Rev	**Description**
AVPTC183014AA AVPTC313714AA AVPTC426014AA	Initial release of 13 SEER air handler with communicating control and serial communicating indoor blower motor.
AVPTC183014AB AVPTC313714AB AVPTC426014AB	Replaced PCBJA10 communicating air handler control board with PCBJA103.
AVPTC31C14AD	To rate AVPTC/DVPTC31 models to 3Kw heater kit.

PRODUCT IDENTIFICATION

AVPTC**14 SINGLE PIECE **A**IR HANDLER MULTIPLE-POSITION **V**ARIABLE SPEED **P**AINTED **T**XV WITH 4-WIRE **C**OMMUNICATING CONTROL	
Model/Rev	**Description**
AVPTC24B14AA AVPTC(30/36)C14AA AVPTC(42/48/60)D14AA	Initial release of 13 SEER air handler with communicating control and serial communicating indoor blower motor. Redesign of AVPTC models to new air handler cabinetry. Incorporated 4-way, mult-position body utilized on ARTP/ASPt mdoels.
AVPTC48C14AA	Updated S&R and travel labels.
AVPTC(42/48/60)14AB	Redesign of AVPTC models to new air handler cabinetry. Incorporated 4-way, mult-position body utilized on ARTP/ASPt mdoels.
AVPTC60D14AC	Serial plate update
AVPTC24B14AC AVPTC30C14AB	Heater Kit airflow update.
AVPTC25B14AA AVPTC29B14AA AVPTC31C14AA AVPTC37B14AA AVPTC37C14AA AVPTC37D14AA AVPTC49D14AA AVPTC59C14AA AVPTC59D14AA AVPTC61D14AA	AVPTC Efficiency Upgrades The new AVPTC redesign will incorporate the upgrade blower, coil pan and coil design intended to increase efficiency and standardize production.
AVPTC33C14AA AVPTC39C14AA AVPTC49C14AA	Upgrade the current AVPTC C-49 cabinets to include 1. quality improvements captured in Ready15 design. 2.include redesigned drain pan, Morrison blower housing and Emerson NXT Booster Charge Adjustable TXV.
AVPTC35B14AA	Introducing 2.5 and 3 Ton Air Handler product lines.
AVPTC[31,37,39,49,59]C14AB AVPTC[37,59,61]D14AB	Revisions because of New Heater kits released
AVPTC[25,29, 37]B14AB AVPTC33C14AB AVPTC[31, 37,39,49,59]C14AC AVPTC49D14AB AVPTC[37,59,61]D14AB	Air handler revisions due to using an upgraded (thicker with higher R value) Quietflex wrapper insulation.
AVPTC35B14AA	The SR plate format is changing from SR075 to SR099 and in order to track this change a minor revision is necessary.

PRODUCT IDENTIFICATION

AVPTC**14 SINGLE PIECE **A**IR HANDLER MULTIPLE-POSITION **V**ARIABLE SPEED **P**AINTED **T**XV WITH 4-WIRE **C**OMMUNICATING CONTROL	
Model/Rev	**Description**
AVPTC25B14BA AVPTC29B14BA AVPTC31C14BA AVPTC33C14BA AVPTC35B14BA AVPTC37B14BA AVPTC37C14BA AVPTC37D14BA AVPTC39C14BA AVPTC49C14BA AVPTC49D14BA AVPTC59C14BA AVPTC59D14BA AVPTC61D14BA	A new control board for ECM based air handlers designed to eliminate the need for a communicating thermostat and move environmental control to our equipment for inverter and 2-stage outdoor products.

PRODUCT IDENTIFICATION

MBVC **M**ODULAR **B**LOWER AIR HANDLER **V-**MULTI-POSITION VARIABLE-SPEED **C**OMMUNICATING READY W/4-WIRES	
Model/Rev	**Description**
MBVC1200AA1-AA MBVC1600AA1-AA MBVC2000AA1-AA	Introduction of module blower with variable speed blower motor with the new communicating control & serial communicating indoor blower motor.
MBVC1200AA1-AB MBVC1600AA1-AB MBVC2000AA1-AB	Introduction of a module blower with variable speed blower motor with communicating control & serial communicating indoor blower motor. Replaces existing Emerson motors (013M00111 & 013M00112).
MBVC1200AA1-AC MBVC1600AA1-AC MBVC2000AA1-AC	Introduction of a module blower with variable speed blower motor with communicating control & serial communicating indoor blower motor. Quality improvement to use 0.75" Quiet Flex Insulation.
MBVC1200AA1-AD MBVC1600AA1-AD MBVC2000AA1-AD	Introduction of a module blower with variable speed blower motor with communicating control & serial communicating indoor blower motor. Introduces a new Communicating Air Handler Control Board (PC).
MBVC[1200,1600,2000]AA1-AE	Release of MBR/MBVC Models(Minor Revisions) for 11th St Plant. - Dayton to Houston
MBVC[1200,1600,2000]AA1-AF	Add permanent sealing/condensation-control upgrades to all MB units and remove high-voltage knockouts

CAUF **C-**INDOOR COIL **A-**UPFLOW/DOWNFLOW **U**NCASED **F**LOWRATOR	
Model/Rev	**Description**
CAUF*****6AA	Initial release of CAUF Dayton Upflow/Downflow coils.
CAUF*****6BA	Burr Oak Louvered Fin released in place of the Wavy Fin.
CAUF****6*DA	Replaced existing copper coils and other associated parts with aluminum components.
CAUF*****6DB	Drain pan material changed.
CAUF1824A6RDB CAUF1824B6RDB	Manufacturing Location Change from Dayton to Houston. Designated by "R".
CAUF36***CA	Redesign from 2 row to 3 row for performance improvement .
CAUF3030(A/B)6RDB CAUF3030(C/D)6RDB CAUF3131(B/C)6RDB	Manufacturing Location Change from Dayton to Houston. Designated by "R".

PRODUCT IDENTIFICATION

CHPF **C**-INDOOR COIL **H**ORIZONTAL A-COIL **P**AINTED **F**LOWRATOR	
Model/Rev	**Description**
CHPF*****6AA	Intial release of 13 SEER CHPF horizontal A coil.
CHPF*****6BA	Released Burr Oak Louvered Fin in place of the Wavy Fin. The rows changed by one, (i.e. 4 row to 3 row; 3 row to 2 row) where applicable.
CHPF1824A6CA CHPF2430B6CA CHPF3636B6CA CHPF3642C6CA CHPF3642D6CA CHPF3743C6BA CHPF3743D6BA CHPF4860D6DA	Louvered fins. Replaced copper tube hairpins with aluminum hairpins.
CHPF1824A6CB CHPF2430B6CB CHPF3636B6CB CHPF3642C6CB CHPF3642D6CB CHPF3743C6BB CHPF3743D6BB CHPF4860D6DB	Drain pan material change to a Decabromodiphenyl Ether free resin.
CHPF1824A6CC CHPF2430B6CC CHPF3636B6CC CHPF3642C6CC CHPF3642D6CC CHPF3743C6BC CHPF3743D6BC CHPF4860D6DC	Change to prepainted wrappers

PRODUCT IDENTIFICATION

CAPF **C-**INDOOR COIL **A-**UPFLOW/DOWNFLOW **P**AINTED **F**LOWRATOR	
Model/Rev	**Description**
CAPF*****6AA	Initial release of CAPF Dayton Upflow/Downflow coils.
CAPF*****6BA	Burr Oak Louvered Fin released in place of the Wavy Fin.
CAPF36***CA	Redesigned for performance improvement from 2 row to 3 row.
CAPF*****6DA	Replaced existing copper coils and other associated parts with aluminum components.
CAPF*****6DB	Drain pan material changed.
CAPF1824A6DC CAPF1824B6DC CAPF1824C6DC CAPF3030A6DC CAPF3030B6DC CAPF3030C6DC CAPF3030D6DC CAPF3131B6DC CAPF3131C6DC CAPF3137B6AB CAPF3636A6DC CAPF3636B6DC CAPF3636C6DC CAPF3636D6DC CAPF3642C6DC CAPF3642D6DC CAPF3743C6DC CAPF3743D6DC CAPF4860C6DC CAPF4860D6DC CAPF4961C6DC CAPF4961D6DC	Redesign the wrapper for the CAPF to provide increased ease of installation.

CAPT **C-**INDOOR COIL **A-**UPFLOW/DOWNFLOW **P**AINTED CASED FLOWRATOR W/**T**XV	
Model/Rev	**Description**
CAPT3131B4BA CAPT3131C4BA	Initial release of coils with factory-installed, non-adjustable TXV. Single stage AHRI ratings for CAPT3131 NTC combinations.
CAPT3743C4AA CAPT3743D4AA	Initial release of single stage AHRI ratings for CAPT3743 NTC combinations.
CAPT4961C4AA CAPT4961D4AA	Initial release of single stage AHRI ratings for CAPT4961C4 NTC combinations.
CAPT3131B4AB CAPT3131C4AB CAPT3743C4AB CAPT3743D4AB CAPT4961C4AB CAPT4961D4AB	Redesign the wrapper for the CAPT to provide increased ease of installation.

PRODUCT IDENTIFICATION

CSCF **C-**INDOOR COIL **S-**HORIZONTAL SLAB COIL **C**-UNPAINTED **F**LOWRATOR	
Model/Rev	**Description**
CSCF*****6AA	Initial release of 13 SEER CSCF horizontal slab coils.
CSCF*****6BA	Burr Oak Louvered Fin released in place of the Wavy Fin. Rows reduced by one where applicable.
CSCF1824N6BB CSCF3036N6BB CSCF3642N6CB CSCF4860N6CB	Drain pan material changed.
CSCF1824N6CA CSCF3036N6CA CSCF3642N6CA CSCF4860N6CA	Replaced copper coils and other associated parts with aluminum components.

ACCESSORIES

ASXC/DSXC 16
ASXC/DSXC/GSXC 18

Model	Description	ASXC16024 DSXC16024	ASXC16036 DSXC16036	ASXC16048 DSXC16048	ASXC16060 DSXC16060	ASXC18024 DSXC18024 GSXC18024	ASXC18036 DSXC18036 GSXC18036	ASXC18048 DSXC18048 GSXC18048	ASXC18060 DSXC18060 GSXC18060
ABK-20	Anchor Bracket Kit	X	X	X	X	X	X	X	X
TX2N4A	TXV Kit	X				X			
TX3N4	TXV Kit		X				X		
TX5N4	TXV Kit			X	X			X	X
CSR-U-1	Hard-start Kit	X				X			
CSR-U-2	Hard-start Kit		X				X		
CSR-U-3	Hard-start Kit			X	X			X	X
FSK01A [1]	Freeze Protection Kit	X	X	X	X	X	X	X	X
LSK02*	Liquid Line Solenoid Valve	X	X	X	X	X	X	X	X
B1141643 [3]	24V Transformer	X	X	X	X	X	X	X	X

* Contains 20 brackets; four brackets needed to anchor unit to pad.

Installed on the indoor coil.

Available in 24V legacy mode only. This feature is integrated in the communicating mode.

This component is included in the CTK0*** communicating thermostat kit.

ASZC/DSZC 16
ASZC/DSZC 18

Model	Description	ASZC16024 DSZC16024	ASZC16036 DSZC16036	ASZC16048 DSZC16048	ASZC16060 DSZC16060	ASZC18036 DSZC18036	ASZC18048 DSZC18048	ASZC18060 DSZC18060
ABK-20	Anchor Bracket Kit	X	X	X	X	X	X	X
TX2N4 [1]	TXV Kit	X						
TX3N4 [1]	TXV Kit		X			X		
TX5N4 [1]	TXV Kit			X	X		X	X
CSR-U-1	Hard-start Kit	X	X			X		
CSR-U-2	Hard-start Kit		X	X	X	X	X	X
CSR-U-3	Hard-start Kit			X	X		X	X
FSK01A [2]	Freeze Protection Kit	X	X	X	X	X	X	X
LSK02*	Liquid Line Solenoid Valve	X	X	X	X	X	X	X
OT18-60A [3]	Outdoor Thermostat/ Lockout Thermostat	X	X	X	X	X	X	X
B1141643 [4]	24V Transformer	X	X	X	X	X	X	X

* Contains 20 brackets; four brackets needed to anchor unit to pad

[1] Field-installed, non-bleed, expansion valve kit - Condensing units and heap pumps with reciprocating compressors require the use of start-assist components when used in conjunction with an indoor coil using a non-bleed thermal expansion valve refrigerant

[2] Installed on the indoor coil

[3] Available in 24V legacy mode only. This feature is integrated in the communicating mode. Required for heat pump applications where ambient temperature fall below 0 °F with 50% or higher relative humidity.

[4] This component is included in the CTK0*** communicating thermostat kit.

ACCESSORIES

EXPANSION VALVE KITS

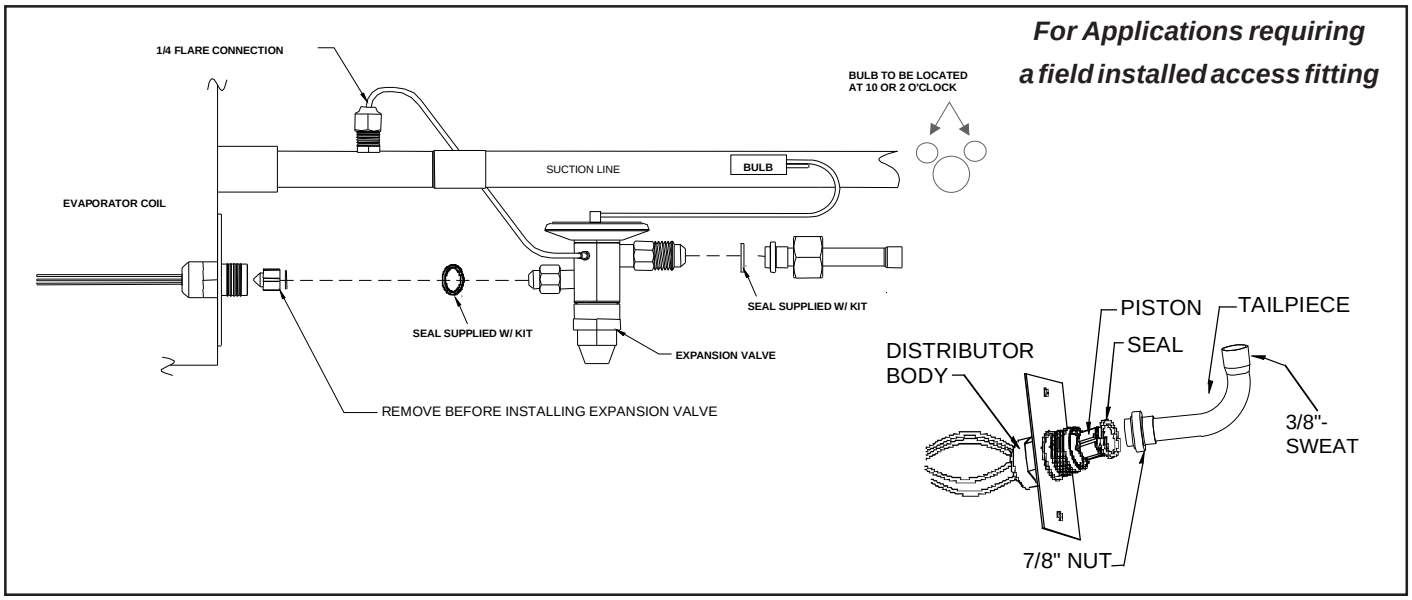

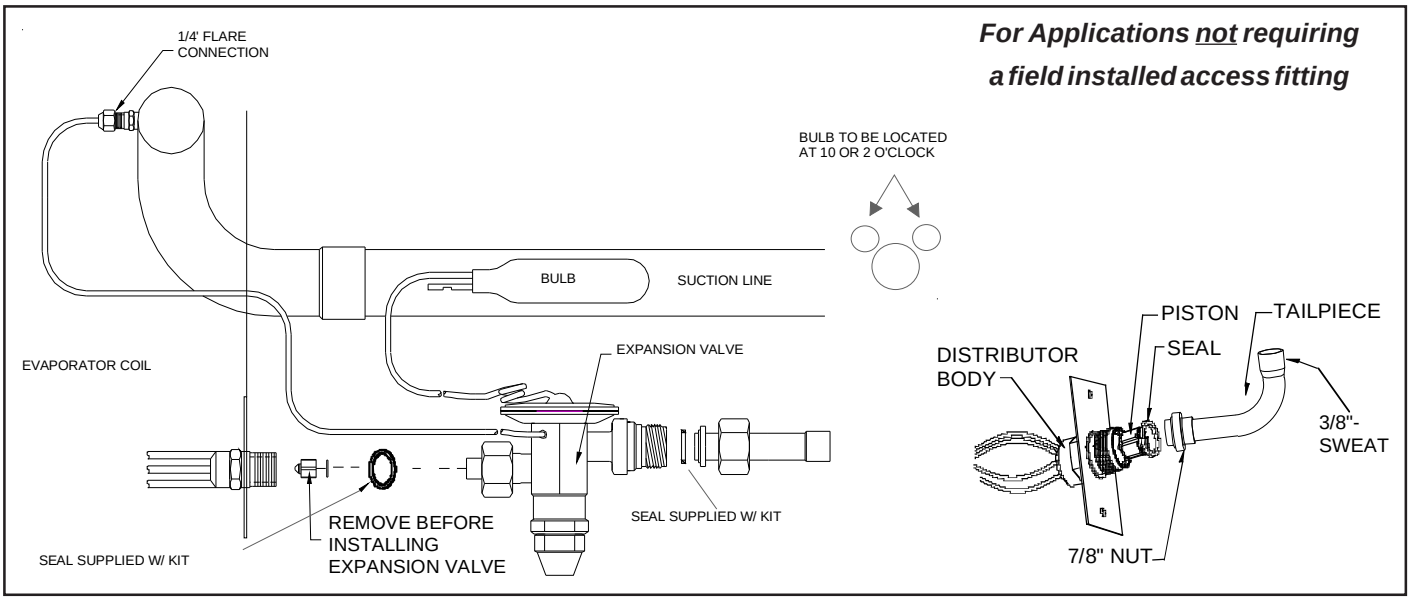

ACCESSORIES

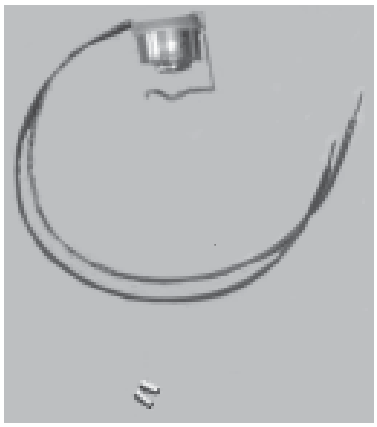

FSK01A
FREEZE THERMOSTAT
KIT

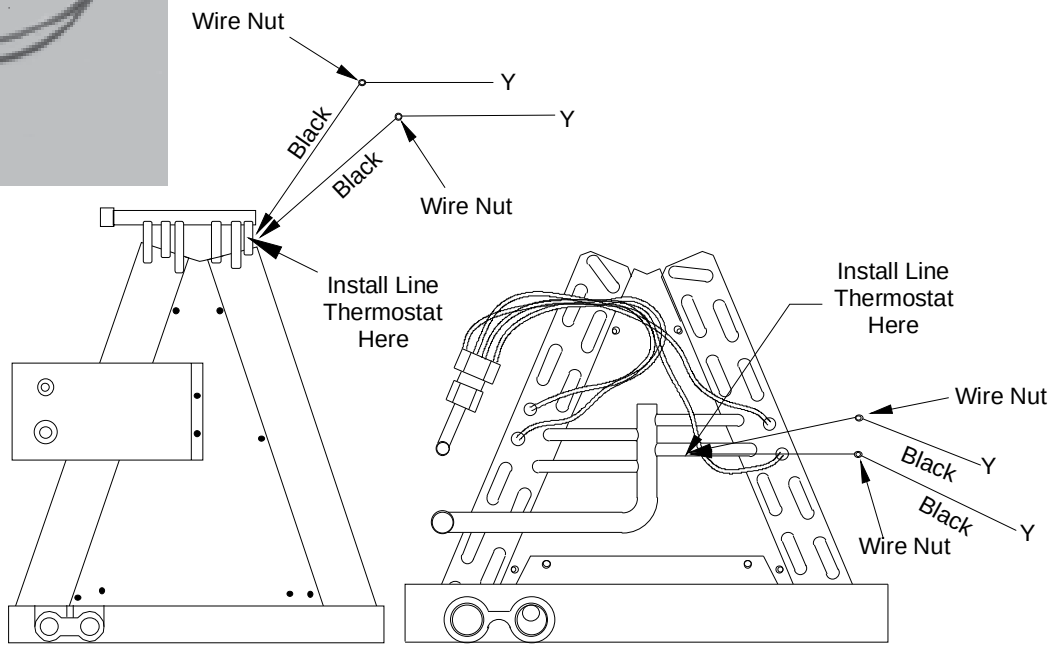

ACCESSORIES

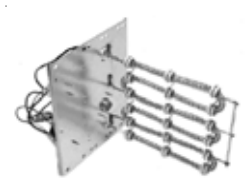

BLOWER		ELECTRIC HEAT KIT								
	NO HEAT	HKR-03*	HKR05-(C)'	HKR-06*	HKR-08(C)*	HKR-10(C)*	HKA-15C*	HKA-20C*	^HKR3-15*	^HKR3-20A
MBVC1200AA-1**	-	X	X	X	X	X	X	-	-	-
MBVC1600AA-1**	-	X	X	X	X	X	X	-	-	-
MBVC2000AA-1**	-	X	X	X	X	X	-	X	-	-

X = Allowable combinations ^ = Circuit 1: Single Phase for Air Handler Motor
- = Restricted combinations Circuit 2: 3-Phase for HKR3 Heater Kits

HK* SERIES ELETRIC HEAT KITS -

ELECTRIC HEAT KIT APPLICATIONS - MBVC

ACCESSORIES

ELECTRIC HEAT KIT APPLICATIONS - AVPTC

MODELS	HKR-03*	HKR-05*/-05C*	HKR-06*	HKR-08*/-08C*	HKR-10*/-10C*	HKR-15C*	HKR-20C*	HKR-21C*	HKA-15C*	HKA-20C*
AVPTC183014A*	X	X	X	X[1]	X[1]	---	---	---	---	---
AVPTC313714A*	X	X	X	X[1]	X[1]	X[2]	---	---	X[2]	X
AVPTC426014A*	X	X	X	X	X	X	X[3]	X[3]	X	X[3]

* Revision level that may or may not be designated.

C Circuit breaker option.

NOTE:

When 8kW and 10kW heat kits are used with an AVPTC1830 and AVPTC3137, matched with 2- ton outdoor unit, see Note 1 below.

[1] **Set Heater Kit dip switches 9, 10 and 11 to 6kW setting (9-ON, 10-OFF,11-ON) to obtain 840 CFM.**

[2] **This heater kit can only be used for '1000 CFM or higher' applications.**

[3] **This heater kit can only be used for '1200 CFM or higher' applications.**

ACCESSORIES

AVPTC**14**

Heat Kit Applications	AVPTC						
Type / Model	**24B14-A***	**30C14-A***	**36C14-A***	**48C14-A***	**42D14-A*†**	**48D14-A*††**	**60D14-A*†††**
HKSX03XC	X	X			X		
HKSX05XC	X	X	X	X	X	X	X
HKSX06XC	X	X	X	X	X	X	X
HKSX08XC	X	X	X	X	X	X	X
HKSX10XC	X	X	X	X	X	X	X
HKSX15XF*			X	X	X	X	X
HKSX20XF*			X	X	X	X	X
HKSC05XC	X	X	X	X	X	X	X
HKSC08XC	X	X	X	X	X	X	X
HKSC10XC	X	X	X	X	X	X	X
HKSC15XA			X	X	X	X	X
HKSC15XB			X	X	X	X	X
HKSC15XF*			X	X	X	X	X
HKSC19CA*			X	X			
HKSC19CB*			X	X			
HKSC20DA					X	X	X
HKSC20DB					X	X	X
HKSCX20XF*			X	X	X	X	X
HKSC25DC*						X	X

* Revision level that may or may not be designated.

Refer to the minimum airflow requirements for each of the heat kits.

†For match up with a 2 ton outdoor unit: Heater kit application shall not exceed 10 kW.
Airflow for 5 kW up to 10 kW heater kits shall be set to 850 cfm speed tap of ON-ON-ON.
††For match up with a 3 ton outdoor unit: Heater kit application shall not exceed 15 kW.
Airflow for 5 kW up to 15 kW heater kits shall be set to 1400 cfm speed tap of ON-ON-OFF.
†††For match up with a 3.5 ton outdoor unit: Heater kit application shall not exceed 20 kW.
Airflow for 5 kW up to 20 kW heater kits shall be set to 1620 cfm speed tap of ON-ON-OFF
** 3 kW heater kit is not applicable for this indoor application.

ACCESSORIES
READY 15 AVPTC

Model	AVPTC25B14	AVPTC29B14	AVPTC31C14	AVPTC33C14	AVPTC35B14	AVPTC39C14	AVPTC37B14	AVPTC37C14	AVPTC37D14	AVPTC49C14	AVPTC49D14	AVPTC59C14	AVPTC59D14	AVPTC61D14
HKSX03XC	X	X		X	X		X							
HKSX05XC	X	X	X	X	X	X	X	X	X	X	X	X	X	X
HKSX06XC	X	X	X	X	X	X	X	X	X	X	X	X	X	X
HKSX08XC	X	X	X	X	X	X	X	X	X	X	X	X	X	X
HKSX10XC	X	X	X	X	X	X	X	X	X	X	X	X	X	X
HKSC05XC	X	X	X	X	X	X	X	X	X	X	X	X	X	X
HKSC08XC	X	X	X	X	X	X	X	X	X	X	X	X	X	X
HKSC10XC	X	X	X	X	X	X	X	X	X	X	X	X	X	X
HKSC15XA	X	X	X	X	X	X	X	X	X	X	X			
HKSC15XB	X	X	X	X	X	X	X	X	X	X	X	X	X	X
HKSC15XF			X			X		X	X	X		X	X	X
HKSC19CA			X			X		X		X				
HKSC19CB			X			X		X		X		X		
HKSC19CH												X		
HKSC20DA									X					
HKSC20DB									X				X	X
HKSC20DH													X	X
HKSC20XF									X			X	X	X
HKSC25DA														X
HKSC25DB														X

PRODUCT DESIGN

This section gives a basic description of cooling unit operation, its various components and their basic operation. Ensure your system is properly sized for heat gain and loss according to methods of the Air Conditioning Contractors Association (ACCA) or equivalent.

CONDENSING UNIT

The condenser air is pulled through the condenser coil by a direct drive propeller fan. This condenser air is then discharged out of the top of the cabinet. These units are designed for free air discharge, so no additional resistance, like duct work, shall be attached.

The suction and liquid line connections on present models are of the sweat type for field piping with refrigerant type copper. Front seating valves are factory installed to accept the field run copper. The total refrigerant charge for a normal installation is factory installed in the condensing unit.

ASXC, ASZC, DSXC, DSZC models are available in 2 through 5 ton sizes and use R-410A refrigerant. They are designed for 208/230 volt single phase applications.

ASXC, ASZC, DSXC, DSZC R-410A model units use the Copeland Scroll "Ultratech" Series compressors which are specifically designed for R-410A refrigerant. These units also have Copeland® ComfortAlert diagnostics. The Copeland® ComfortAlert diagnostics are integrated into the unitary (UC) control. These models are ComfortNet™ ready.

There are a number of design characteristics which are different from the traditional reciprocating and/or scroll compressors.

"Ultractech" Series scroll compressors will not have a discharge thermostat. Some of the early model scroll compressors required discharge thermostat.

"Ultratech" Series scroll compressors use "POE" or polyolester oil which is **NOT** compatible with mineral oil based lubricants like 3GS. "POE" oil must be used if additional oil is required.

The ASXC [16 & 18], ASZC [16 & 18], DSXC [16 & 18] and DSZC [16 & 18] series split system units use a two-stage scroll compressor. The two-step modulator has an internal unloading mechanism that opens a bypass port in the first compression pocket, effectively reducing the displacement of the scroll. The opening and closing of the bypass port is controlled by an internal electrically operated solenoid.

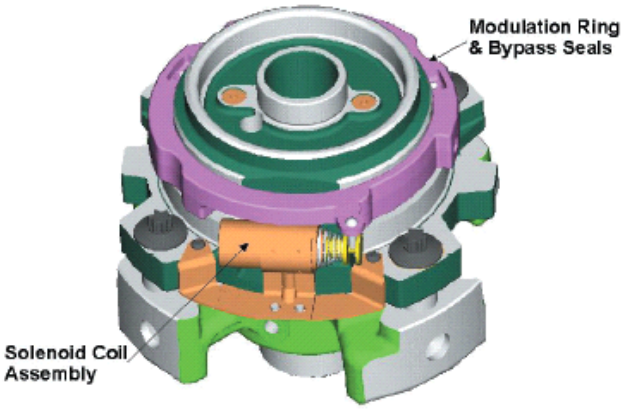

The ZPS two-step modulated scroll uses a single step of unloading to go from full capacity to approximately 67% capacity. A single speed, high efficiency motor continues to run while the scroll modulates between the two capacity steps.

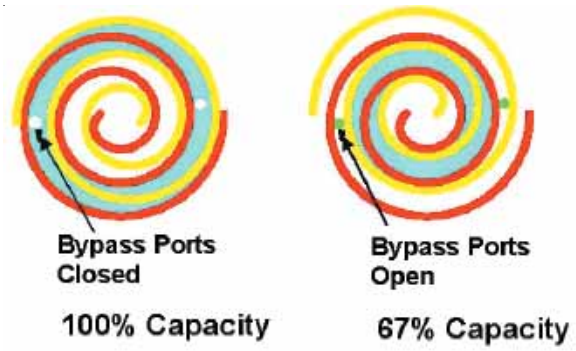

FIGURE A

A scroll is an involute spiral which, when matched with a mating scroll form as shown, generates a series of crescent shaped gas pockets between the two members.

During compression, one scroll remains stationary (fixed scroll) while the other form (orbiting scroll) is allowed to orbit (but not rotate) around the first form.

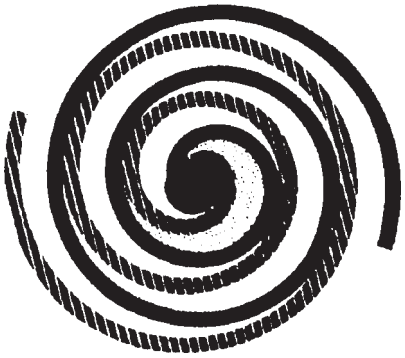

As this motion occurs, the pockets between the two forms are slowly pushed to the center of the two scrolls while simultaneously being reduced in volume. When the pocket reaches the center of the scroll form, the gas, which is now at a high pressure, is discharged out of a port located at the center.

During compression, several pockets are being compressed simultaneously, resulting in a very smooth process. Both the suction process (outer portion of the scroll members) and the discharge process (inner portion) are continuous.

Some design characteristics of the Compliant Scroll compressor are:

- Compliant Scroll compressors are more tolerant of liquid refrigerant.

PRODUCT DESIGN

NOTE: Even though the compressor section of a Scroll compressor is more tolerant of liquid refrigerant, continued floodback or flooded start conditions may wash oil from the bearing surfaces causing premature bearing failure.

- Compliant scroll compressors perform "quiet" shutdowns that allow the compressor to restart immediately without the need for a time delay. This compressor will restart even if the system has not equalized.

NOTE: Operating pressures and amp draws may differ from standard reciprocating compressors. This information can be found in the unit's Technical Information Manual.

CAPACITY CONTROL - COMFORTNET™ MODELS

During the compression process, there are several pockets within the scroll that are compressing gas. Modulation is achieved by venting a portion of the gas in the first suction pocket back to the low side of the compressor thereby reducing the effective displacement of the compressor. See Figure A. Full capacity is achieved by blocking these vents, increasing the displacement to 100%. A solenoid in the compressor, controlled by an external 24-volt ac signal, moves the slider ring that covers and uncovers these vents. The vent covers are arranged in such a manner that the compressor operates somewhere around 67% capacity when the solenoid is not energized and 100% capacity when the solenoid is energized. The loading and unloading of the two step scroll is done “on the fly” without shutting off the motor between steps. See Figure C below**.** The unloaded mode default was chosen for two reasons:

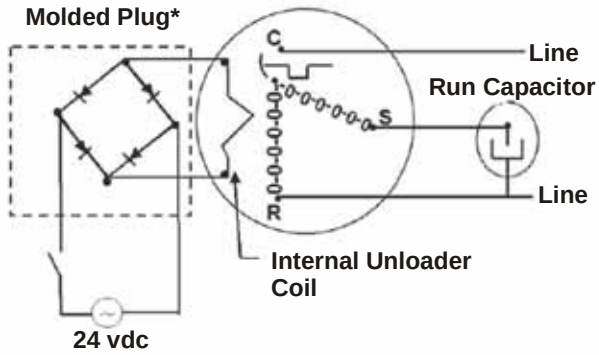

***Rectifier is integrated on the UC PCB**

FIGURE C

1. It is expected that the majority of run hours will be in the low capacity, unloaded mode.
2. It allows a simple two-stage thermostat to control capacity through the second stage in both cooling and possibly heating if desired.

UNLOADER SOLENOID

A nominal 24-volt direct current coil activates the internal unloader solenoid. The input control circuit voltage must be 18 to 28 volt ac. The coil power requirement is 20 VA. The external electrical connection is made with a molded plug assembly. This plug is connected to the Communicating Unitary Control PCB (UC PCB) which contains a full wave rectifier to supply direct current to the unloader coil.

COILS AND BLOWER COILS

MBVC blower cabinets are designed to be used as a two-piece blower and coil combination and can be utilized with the CAUF, CAPF and CAPT coils for upflow and downflow applications. The CACF and CHPF coils are designed for horizontal applications. This two-piece arrangement allows for a variety of mix-matching possibilities providing greater flexibility.

The MBVC blower cabinets use a variable speed motor that maintains a constant airflow with a higher duct static. MBVC blower cabinets are approved for applications with cooling coils of up to 0.8 inches W.C. external static pressure. The MBVC models allow airflow trimming of +/-10%.

All units are constructed with R-4.2 insulation. In areas of extreme humidity (greater than 80% consistently), insulate the exterior of the blower with insulation having a vapor barrier equivalent to ductwork insulation, providing local codes permit.

AVPTC Multi-Position Air Handler

AVPTC is a multi-position, variable-speed air handler used with R-410A and are available in 2 to 5 ton sizes with optional 3 kW to 25kW electric heat kits available for field installation. The AVPTC unit’s blower design includes a variable-speed ECM motor and is compatible with heat pumps and variable-capacity cooling applications.

This appliance can be installed in the vertical or left horizontal position without modification. The horizontal right and downflow positions require product modification. This product is designed for zero inches (0 inches) clearance; however, adequate access for service or replacement must be considered without removing permanent structure. This unit can be installed on a platform when deemed necessary.

In an attic installation a secondary drain pan must be provided by the installer and placed under the entire unit with a separate drain line properly sloped and terminated in an area visible to the owner. This secondary drain pan is required in the event that there is a leak or main drain blockage. Closed cell insulation should be applied to the drain lines in unconditioned spaces where sweating may occur.

NOTE: AVPTC air handlers are factory-sealed to achieve a 2% or less leakage rate at 1.0" water gauge external duct static pressure.

PRODUCT DESIGN

Communicating Unitary Control (UC) PCB

The Communicating System Unitary Control PCB is a microprocessor-based control for heat pump and air conditioning condensing units with single-phase compressors up to 5 ton capacity operating on standard residential or Delta and Wye commercial power. The control incorporates the basic functionality of existing defrost controls, outdoor thermostats, contactors, compressor staging controls, short cycle controls, line voltage monitors, Comfort Alert™ or CoreSense Module (dependent upon which module you are using), two speed condenser fan relays and the Active Protection component of enabled thermostats. The control is designed to work as part of a fully communicating HVAC system with 4 wires. The control also supports legacy 24VAC thermostat inputs for Y1, Y2, O and 24VAC outputs for RVS, W1, and L for non-communicating systems. Outputs include compressor power, compressor stage select, and outdoor fan high and outdoor fan low speed. System inputs include high/low pressure switches, as well as thermistor inputs for outdoor coil temperature and outdoor air temperature.

SYSTEM OPERATION

COOLING

The refrigerant used in the system is R-410A. It is a clear, colorless, non-toxic and non-irritating liquid. R-410A is a 50:50 blend of R-32 and R-125. The boiling point at atmospheric pressure is **-62.9°F.**

A few of the important principles that make the refrigeration cycle possible are: heat always flows from a warmer to a cooler body. Under lower pressure, a refrigerant will absorb heat and vaporize at a low temperature. The vapors may be drawn off and condensed at a higher pressure and temperature to be used again.

The indoor evaporator coil functions to cool and dehumidify the air conditioned spaces through the evaporative process taking place within the coil tubes.

NOTE: The pressures and temperatures shown in the refrigerant cycle illustrations on the following pages are for demonstration purposes only. Actual temperatures and pressures are to be obtained from the "Expanded Performance Chart".

Liquid refrigerant at condensing pressure and temperatures, (270 psig and 122°F), leaves the outdoor condensing coil through the drier and is metered into the indoor coil through the metering device. As the cool, low pressure, saturated refrigerant enters the tubes of the indoor coil, a portion of the liquid immediately vaporizes. It continues to soak up heat and vaporizes as it proceeds through the coil, cooling the indoor coil down to about 48°F.

Heat is continually being transferred to the cool fins and tubes of the indoor evaporator coil by the warm system air. This warming process causes the refrigerant to boil. The heat removed from the air is carried off by the vapor.

As the vapor passes through the last tubes of the coil, it becomes superheated. That is, it absorbs more heat than is necessary to vaporize it. This is assurance that only dry gas will reach the compressor. Liquid reaching the compressor can weaken or break compressor valves.

The compressor increases the pressure of the gas, thus adding more heat, and discharges hot, high pressure superheated gas into the outdoor condenser coil.

In the condenser coil, the hot refrigerant gas, being warmer than the outdoor air, first loses its superheat by heat transferred from the gas through the tubes and fins of the coil. The refrigerant now becomes saturated, part liquid, part vapor and then continues to give up heat until it condenses to a liquid alone. Once the vapor is fully liquefied, it continues to give up heat which subcools the liquid, and it is ready to repeat the cycle.

HEATING

The heating portion of the refrigeration cycle is similar to the cooling cycle. By energizing the reversing valve solenoid coil, the flow of the refrigerant is reversed. The indoor coil now becomes the condenser coil, and the outdoor coil becomes the evaporator coil.

The check valve at the indoor coil will open by the flow of refrigerant letting the now condensed liquid refrigerant bypass the indoor expansion device. The check valve at the outdoor coil will be forced closed by the refrigerant flow, thereby utilizing the outdoor expansion device.

COOLING CYCLE

For communicating room thermostat: When the room thermostat calls for either low stage cool or high stage cool, appropriate commands are sent via the data 1 and data 2 lines to the outdoor unit's UC control. The UC control energizes the on-board compressor relay and the on-board outdoor fan relay. The compressor high stage solenoid is energized if it is a high stage call.

The UC control sends a fan command to the indoor unit (air handler or furnace). The indoor unit operates the indoor blower at the appropriate airflow level. The system operates at the cooling level demanded by the thermostat.

When the thermostat is satisfied, appropriate commands are sent to the UC control. The compressor relay and outdoor fan relay is de-energized. The compressor high stage solenoid is de-energized if it was energized. The UC control sends an appropriate command to the indoor unit to de-energize the indoor blower motor.

If room thermostat fan status is set to be “on”, then indoor blower would run continuously rather than cycling with the compressor.

For heat pumps, the reversing valve is energized during the cooling cycle. The call for cooling from the communicating thermostat indicates to the control that the reversing valve is to be energized during cooling operation.

HEATING CYCLE

For communicating room thermostat: When the room thermostat calls for either low stage heat or high stage heat, appropriate commands are sent via the data 1 and data 2 lines to the outdoor unit's UC control. The UC control energizes the on-board compressor relay and the on-board outdoor fan relay. The compressor high stage solenoid is energized if it is a high stage call. The UC control sends a fan command to the indoor unit (air handler or furnace). The indoor unit operates the indoor blower at the appropriate airflow level. The system operates at the cooling level demanded by the thermostat.

When the thermostat is satisfied, appropriate commands are sent to the UC control. The compressor relay and outdoor fan relay is de-energized. The compressor high stage solenoid is de-energized if it was energized. The UC control sends an appropriate command to the indoor unit to de-energize the indoor blower motor.

SYSTEM OPERATION

DEFROST CYCLE - COMFORTNET™ MODELS

The defrosting of the outdoor coil is jointly controlled by the UC PCB and the outdoor coil temperature (OCT) sensor.

The OCT sensor is clamped to a feeder tube entering the outdoor coil. Defrost timing periods of 30, 60, 90 or 120 minutes may be selected via the dipswitch settings on the UC PCB. In a communicating system, the defrost timing periods can also be selected in the communicating thermostat user menu. During operation, if the coil temperature is low enough (approximately 31° F), the microprocessor will accumulate the compressor run time. When the total compressor run time reaches 30, 60, 90 or 120 minutes, and there is a call for heat, the PCB will initiate a defrost cycle. When the microprocessor detects the coil temperature to be high enough (approximately 75 ^{0}F), or 10 minutes of maximum defrost cycle time has elapsed, whichever occurs first, the defrost cycle is terminated and the timing period is reset. The field service personnel can also advance a heat pump to the defrost cycle by simultaneously pressing the “TEST” button and the “RECALL” button on the UC board.

Use the dipswitches to select defrost time interval (30, 60, 90 or 120 minutes) See chart below

Dipswitch Settings for Selection of Defrost Time

SYSTEM OPERATION

COOLING CYCLE

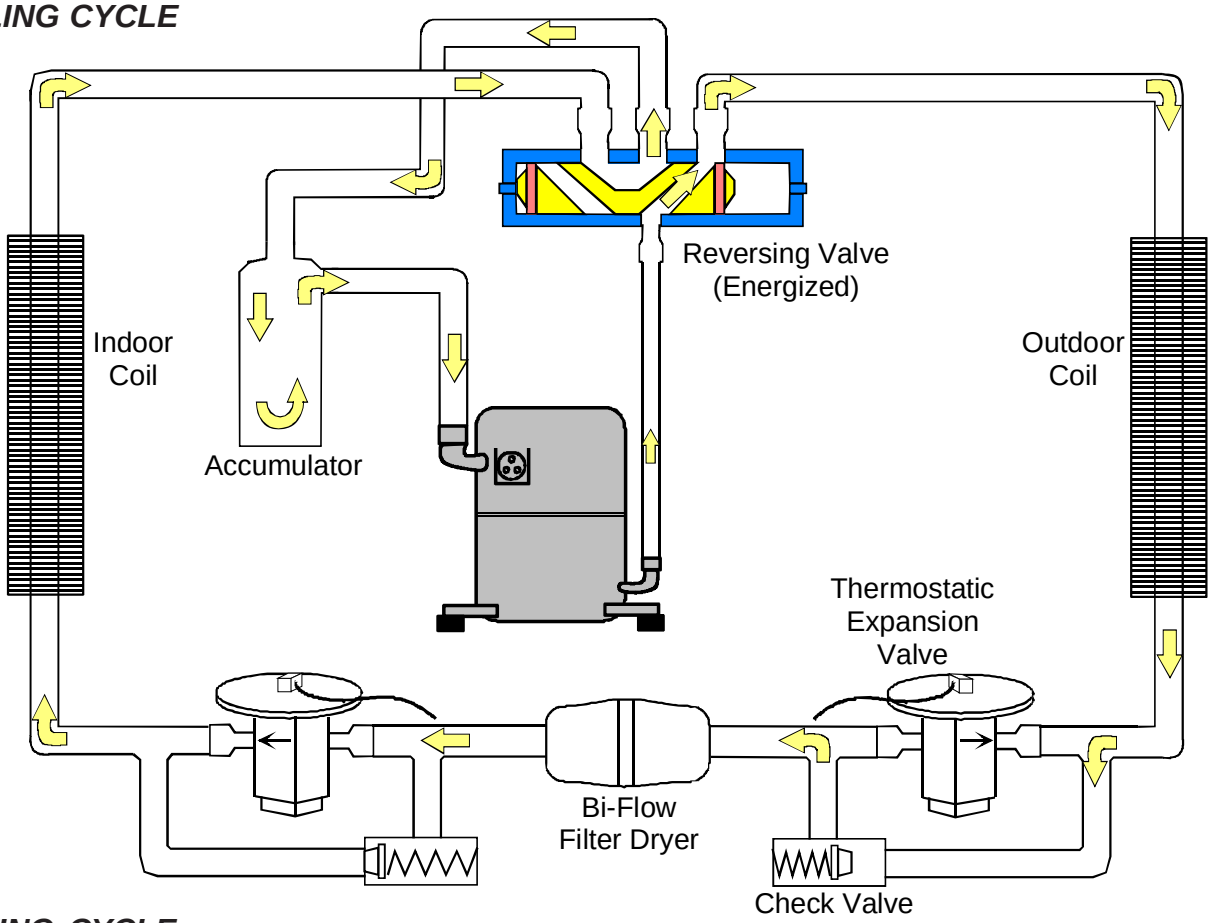

HEATING CYCLE

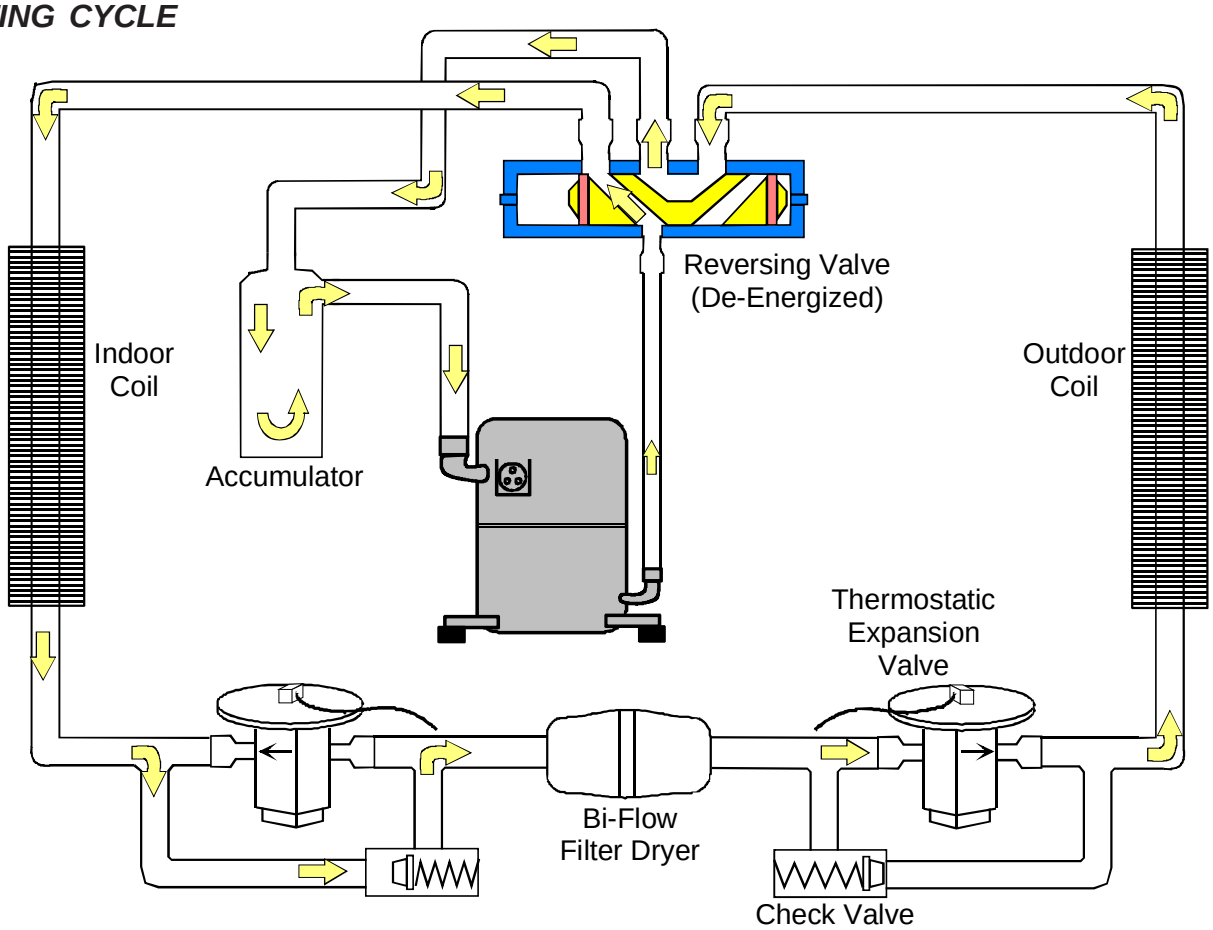

SYSTEM OPERATION

EXPANSION VALVE/CHECK VALVE ASSEMBLY IN COOLING OPERATION

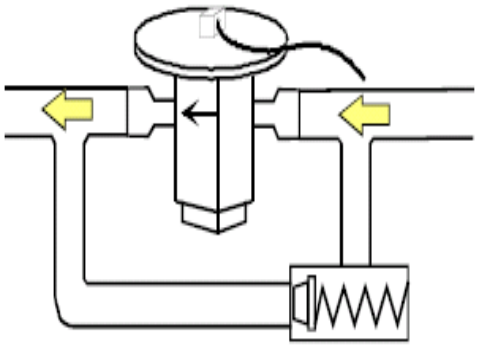

EXPANSION VALVE/CHECK VALVE ASSEMBLY IN HEATING OPERATION

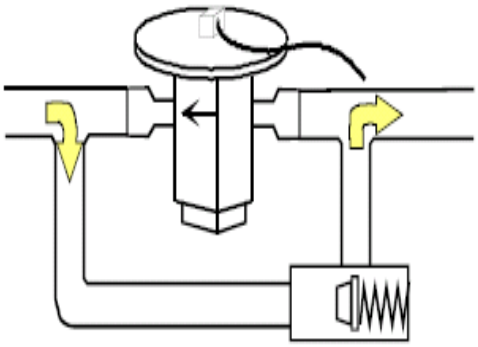

Most expansion valves used in current Goodman/Amana® Brand Heat Pump products use an internally checked expansion valve.
This type of expansion valve does not require an external check valve as shown above.
However, the principle of operation is the same.

TROUBLESHOOTING CHART

COOLING/HP ANALYSIS CHART

Complaint	No Cooling							Unsatisfactory Cooling/Heating								System Operating Pressures				Test Method Remedy	See Service Procedure Ref.
POSSIBLE CAUSE DOTS IN ANALYSIS GUIDE INDICATE "POSSIBLE CAUSE" SYMPTOM	System will not start	Compressor will not start - fan runs	Comp. and Cond. Fan will not start	Evaporator fan will not start	Condenser fan will not start	Compressor runs - goes off on overload	Compressor cycles on overload	System runs continuously - little cooling/htg	Too cool and then too warm	Not cool enough on warm days	Certain areas too cool, others too warm	Compressor is noisy	System runs - blows cold air in heating	Unit will not terminate defrost	Unit will not defrost	Low suction pressure	Low head pressure	High suction pressure	High head pressure		
Pow er Failure	●																			Test Voltage	S-1
Blow n Fuse	●		●	●																Inspect Fuse Size & Type	S-1
Loose Connection	●			●		●														Inspect Connection - Tighten	S-2, S-3
Shorted or Broken Wires	●	●	●	●	●	●														Test Circuits With Ohmmeter	S-2, S-3
Open Fan Overload				●	●															Test Continuity of Overload	S-17A
Faulty Thermostat	●		●	●					●											Test Continuity of Thermostat & Wiring	S-3
Faulty Transformer	●		●																	Check Control Circuit w ith Voltmeter	S-4
Shorted or Open Capacitor		●		●	●	●	●													Test Capacitor	S-15
Internal Compressor Overload Open		●											♦							Test Continuity of Overload	S-17A
Shorted or Grounded Compressor		●				●														Test Motor Windings	S-17B
Compressor Stuck		●				●	●						♦							Use Test Cord	S-17D
Faulty Compressor Contactor			●		●	●														Test Continuity of Coil & Contacts	S-7, S-8
Faulty Fan Relay				●																Test Continuity of Coil And Contacts	S-7
Open Control Circuit				●																Test Control Circuit w ith Voltmeter	S-4
Low Voltage		●				●	●													Test Voltage	S-1
Faulty Evap. Fan Motor				●												●			♦	Repair or Replace	S-16
Shorted or Grounded Fan Motor					●														●	Test Motor Windings	S-16
Improper Cooling Anticipator							●		●											Check Resistance of Anticipator	S-3B
Shortage of Refrigerant							●	●					♦			●	●			Test For Leaks, Add Refrigerant	S-101,103
Restricted Liquid Line							●	●								●	●		●	Remove Restriction, Replace Restricted Part	S-112
Open Element or Limit on Elec. Heater								♦					♦							Test Heater Element and Controls	S-26,S-27
Dirty Air Filter								●		●	●					●			♦	Inspect Filter-Clean or Replace	
Dirty Indoor Coil								●		●	●					●			♦	Inspect Coil - Clean	
Not enough air across Indoor Coil								●		●	●					●			♦	Check Blow er Speed, Duct Static Press, Filter	S-200
Too much air across Indoor Coil																	♦	●		Reduce Blow er Speed	S-200
Overcharge of Refrigerant						●	●					●	♦					●	●	Recover Part of Charge	S-113
Dirty Outdoor Coil						●	●			●						♦			●	Inspect Coil - Clean	
Noncondensibles							●			●			♦						●	Recover Charge, Evacuate, Recharge	S-114
Recirculation of Condensing Air							●			●									●	Remove Obstruction to Air Flow	
Infiltration of Outdoor Air								●		●	●									Check Window s, Doors, Vent Fans, Etc.	
Improperly Located Thermostat						●			●											Relocate Thermostat	
Air Flow Unbalanced									●		●									Readjust Air Volume Dampers	
System Undersized								●		●										Refigure Cooling Load	
Broken Internal Parts												●	♦							Replace Compressor	S-115
Broken Valves								●				●					●	●		Test Compressor Efficiency	S-104
Inefficient Compressor								●					♦				●	●		Test Compressor Efficiency	S-104
Wrong Type Expansion Valve						●	●	●		●						●	●		♦	Replace Valve	S-110
Expansion Device Restricted						●	●	●		●						●	●		●	Remove Restriction or Replace Expansion Device	S-110
Oversized Expansion Valve								●											●	Replace Valve	
Undersized Expansion Valve						●	●	●		●						●				Replace Valve	
Expansion Valve Bulb Loose												●						●		Tighten Bulb Bracket	S-105
Inoperative Expansion Valve						●		●								●				Check Valve Operation	S-110
Loose Hold-dow n Bolts												●								Tighten Bolts	
Faulty Reversing Valve						●							♦	♦	♦		♦	♦	♦	Replace Valve or Solenoid	S-21, 122
Faulty Defrost Control					●								♦	♦	♦	♦	♦		♦	Test Control	S-24
Faulty Defrost Thermostat													♦	♦	♦	♦	♦	♦	♦	Test Defrost Thermostat	S-25
Flow rator Not Seating Properly								●									●	●		Check Flow rator & Seat or Replace Flow rator	S-111

● Cooling or Heating Cycle (Heat Pump) ♦ Heating Cycle Only (Heat Pump)

SERVICING TABLE OF CONTENTS

S-1 CHECKING VOLTAGE 37
S-2 CHECKING WIRING 37
S-3E CTK0*** COMFORTNETTM THERMOSTAT 37
S-4 CHECKING TRANSFORMER AND CONTROL CIRCUIT 50
S-6 CHECKING TIME DELAY RELAY 50
S-8A CHECKING UNITARY (UC) CONTROL COMPRESSOR CONTACTOR/RELAY CONTACTS 50
S-9 CHECKING HIGH AND LOW VOLTAGE TO ECM MOTOR 51
S-10A COPELAND COMFORT ALERT™ 51
S-12 CHECKING HIGH PRESSURE CONTROL 72
S-13 CHECKING LOW PRESSURE CONTROL 72
S-14 CHECKING HIGH AND LOW PRESSURE SWITCH VOLTAGE 72
S-15 CHECKING CAPACITOR 72
S-15A RESISTANCE CHECK USING A DIGITAL MULTI-METER 72
S-15B CAPACITANCE CHECK USING A DIGITAL MULTI-METER (IN CAPACITANCE MODE) 73
S-16G CHECKING EMERSON ULTRATECH™ ECM MOTORS 73
S-16H ECM CFM ADJUSTMENTS AVPTC/MBVC 76
S-17 CHECKING COMPRESSOR 84
S-17A RESISTANCE TEST 84
S-17B GROUND TEST 84
S-17C UNLOADER TEST PROCEDURE 85
S-17D OPERATION TEST 86
S-18 TESTING CRANKCASE HEATER (OPTIONAL ITEM) 86
S-21 CHECKING REVERSING VALVE AND SOLENOID 86
S-24 TESTING DEFROST CONTROL 86
S-26 TESTING TEMPERATURE SENSORS (COMFORTNET READY MODELS ONLY) 87
S-40A AVPTC/MBVC ELECTRONIC BLOWER/HEATER CONTROL 87
S-60 ELECTRIC HEATER (OPTIONAL ITEM) 92
S-61A CHECKING HEATER LIMIT CONTROL(S) 93
S-61B CHECKING HEATER FUSE LINK 93
(OPTIONAL ELECTRIC HEATERS) 93
S-62 CHECKING HEATER ELEMENTS 93
S-100 REFRIGERATION REPAIR PRACTICE 93
S-101 LEAK TESTING (NITROGEN OR NITROGEN-TRACED) 94
S-102 EVACUATION 94
S-103 CHARGING 95
S-104 CHECKING COMPRESSOR EFFICIENCY 96
S-106 OVERFEEDING 96
S-107 UNDERFEEDING 96
S-108 SUPERHEAT 96
S-109 CHECKING SUBCOOLING 96
S-110 CHECKING EXPANSION VALVE OPERATION 97
S-112 CHECKING RESTRICTED LIQUID LINE 97
S-113 OVERCHARGE OF REFRIGERANT 97
S-114 NON-CONDENSABLES 97
S-115 COMPRESSOR BURNOUT 100
S-120 REFRIGERANT PIPING 100
S-203 SINGLE PIECE AIR HANDLER EXTERNAL STATIC PRESSURE 101
S-203A TWO PIECE AIR HANDLER EXTERNAL STATIC PRESSURE 101

SERVICING

S-1 CHECKING VOLTAGE

1. Remove outer case, control panel cover, etc., from unit being tested.

With power ON:

WARNING

Line Voltage now present.

2. Using a voltmeter, measure the voltage across terminals L1 and L2 of the contactor for the condensing unit or at the field connections for the air handler or heaters.

   ComfortNet™ Ready Condensing Units: Measure the voltage across the L1 and L2 lugs on the unitary (UC) control.

3. No reading - indicates open wiring, open fuse(s) no power or etc., from unit to fused disconnect service. Repair as needed.
4. With ample voltage at line voltage connectors, energize the unit.
5. Measure the voltage with the unit starting and operating, and determine the unit Locked Rotor Voltage. **NOTE**: If checking heaters, be sure all heating elements are energized.

   Locked Rotor Voltage is the actual voltage available at the compressor during starting, locked rotor, or a stalled condition. Measured voltage should be above minimum listed in chart below.

   To measure Locked Rotor Voltage attach a voltmeter to the run "R" and common "C" terminals of the compressor, or to the T_1 and T_2 terminals of the contactor. Start the unit and allow the compressor to run for several seconds, then shut down the unit. Immediately attempt to restart the unit while measuring the Locked Rotor Voltage.

   ComfortNet Ready Condensing Units: To measure the Locked Rotor Voltage, attach a voltmeter to the run "R" and common "C" terminals of the compressor or across the "R" and "C" lugs on the unitary (UC) control. Start the unit and allow the compressor to run for several seconds, then shut down the unit. Immediately attempt to restart the unit while measuring the Locked Rotor Voltage.

6. Locked rotor voltage should read within the voltage tabulation as shown. If the voltage falls below the minimum voltage, check the line wire size. Long runs of undersized wire can cause low voltage. If wire size is adequate, notify the local power company in regard to either low or high voltage.

Unit Supply Voltage		
Voltage	Min.	Max
208/230	197	253
460	414	506

NOTE: When operating electric heaters on voltages other than 240 volts, refer to the System Operation section on electric heaters to calculate temperature rise and air flow. Low voltage may cause insufficient heating.

S-2 CHECKING WIRING

WARNING

HIGH VOLTAGE!
Disconnect ALL power before servicing or installing. Multiple power sources may be present. Failure to do so may cause property damage, personal injury or death.

1. Check wiring visually for signs of overheating, damaged insulation and loose connections.
2. Use an ohmmeter to check continuity of any suspected open wires.
3. If any wires must be replaced, replace with comparable gauge and insulation thickness.

S-3E CTK0*** COMFORTNET™ THERMOSTAT

COMFORTNET™ SYSTEM

The ComfortNet system (or CT system) is a system that includes a ComfortNet compatible air handler/furnace/modular blower and air conditioner or heat pump with a CTK0* thermostat. Any other system configurations are considered invalid ComfortNet systems and must be connected as a tradition (or legacy) system. The table below compares the valid CT systems.

CT compatible Air Handler or Modular Blower	*CT compatible Air Conditioner*	*Full CT system benefits & features*
CT compatible Air Handler or Modular Blower	*CT compatible Heat Pump*	*Full CT system benefits & features*

A ComfortNet heating/air conditioning system differs from a legacy/traditional system in the manner in which the indoor unit, outdoor unit and thermostat interact with one another. In a traditional system, the thermostat sends commands to the indoor and outdoor units via analog 24 VAC signals. It is a one-way communication path in that the indoor and outdoor units typically do not return information to the thermostat.

On the other hand, the indoor unit, outdoor unit, and thermostat comprising a ComfortNet system “communicate” digitally with one another. It is now a two-way communications path. The thermostat still sends commands to the indoor and outdoor units. However, the thermostat may also request and receive information from both the indoor and outdoor units. This information may be displayed on the CT thermostat. The indoor and outdoor units also interact with one another. The outdoor unit may send commands to or request information from the indoor unit. This two-way digital communications

between the thermostat and subsystems (indoor/outdoor unit) and between subsystems is the key to unlocking the benefits and features of the ComfortNet system.

Two-way digital communications is accomplished using only two wires. The thermostat and subsystem controls are powered with 24 VAC Thus, a maximum of 4 wires between the equipment and thermostat is all that is required to operate the system.

AIRFLOW CONSIDERATIONS

Airflow demands are managed differently in a fully communicating system than they are in a legacy wired system. The system operating mode (as determined by the thermostat) determines which unit calculates the system airflow demand. If the indoor unit is responsible for determining the airflow demand, it calculates the demand and sends it to the ECM motor. If the outdoor unit or thermostat is responsible for determining the demand, it calculates the demand and transmits the demand along with a fan request to the indoor unit. The indoor unit then sends the demand to the ECM motor. The following table lists the various ComfortNet™ systems, the operating mode, and airflow demand source.

For example, assume the system is an air conditioner matched with an air handler. With a call for low stage cooling, the air conditioner will calculate the system's low stage cooling airflow demand. The air conditioner will then send a fan request along with the low stage cooling airflow demand to the air handler. Once received, the air handler will send the low stage cooling airflow demand to the ECM motor. The ECM motor then delivers the low stage cooling airflow. The table below lists the nominal high and low stage airflow for the ComfortNet air conditioners and heat pumps.

Models	Cooling		Heating	
	High	Low	High	Low
*SZC160241	800	600	800	600
*SZC160361	1200	800	1200	800
*SZC160481	1550	1100	1550	1100
*SZC160601	1800	1210	1800	1210
*SZC180241	850	550	850	550
*SZC180361	1250	850	1250	850
*SZC180481	1750	1210	1750	1210
*SZC180601	1750	1210	1750	1210

CONTROL WIRING

NOTE: Refer to section *Electrical Connections - High Voltage Connections* for 208/230 volt line connections to the air conditioner or heat pump.

NOTE: A removable plug connector is provided with the control to make thermostat wire connections. This plug may be removed, wire connections made to the plug, and replaced. It is **strongly** recommended that you do not connect multiple wires into a single terminal. Wire nuts are recommended to ensure one wire is used for each terminal. Failure to do so may result in intermittent operation.

Typical 18 AWG thermostat wire may be used to wire the system components. 150 feet is the maximum length of wire recommended between indoor unit and outdoor unit, or between indoor unit and thermostat.

CTK04 STANDARD WIRING SCHEME:

Two wires may be utilized between the indoor and outdoor units. For this wiring scheme, only the data lines, 1 and 2, are required between the indoor and outdoor units. A 40VA, 208/230 VAC to 24 VAC transformer must be installed in the outdoor unit to provide 24 VAC power to the outdoor unit's electronic control. The "C" 24v common of the outdoor transformer should be grounded to the equipment (earth) ground. The transformer is included with the CTK0* kit. See kit instructions for mounting and wiring instructions. Four wires are required between the indoor unit and thermostat.

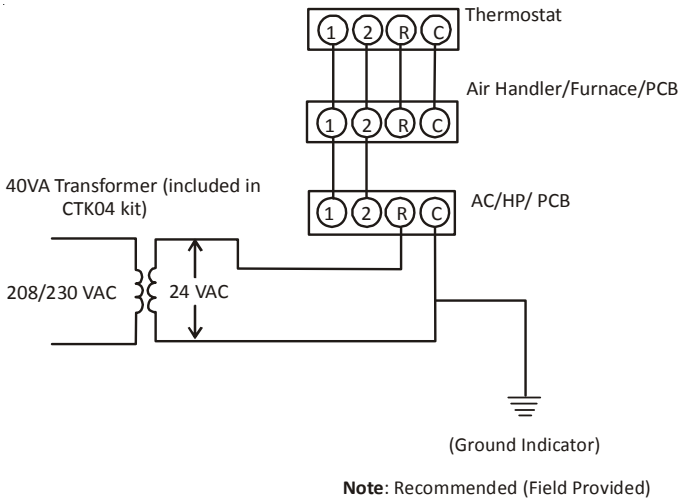

System Wiring

SERVICING

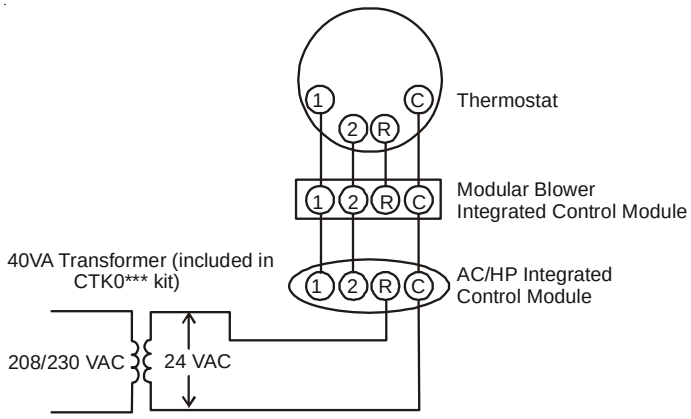

CTK04 System Wiring Using Three-Wires between Air Handler and AC / HP and Four Wires between Air Handler and Thermostat

CTK 04 ALTERNATE WIRING SCHEME:

Three wires should be utilized between the indoor and outdoor units. For this wiring scheme, two wires for the data lines, 1 and 2 are required and a wire connecting the common "C" terminals between the indoor and outdoor units. This connects both commons to the same ground potential allowing for better communication. A 40VA, 208/230 VAC to 24 VAC transformer **must be installed** in the outdoor unit to provide 24 VAC power to the outdoor unit's electronic control. The transformer is included with the CTK0* kit. See kit instructions for mounting and wiring instructions. Four wires are required between the indoor unit and thermostat.

COMFORTNET™ SYSTEM ADVANCED FEATURES

The ComfortNet™ system permits access to additional system information, advanced setup features, and advanced diagnostic/troubleshooting features. These advanced features are organized into a menu structure. Refer to the Installation and Start-Up instructions shipped with your particular CTKO*** thermostat.

Diagnostics

Accessing the air handler's diagnostics menu provides ready access to the last six faults detected by the air handler. Faults are stored most recent to least recent. Any consecutively repeated fault is stored a maximum of three times. Example: A clogged return air filter causes the air handler's motor to repeatedly enter a limiting condition. The control will only store this fault the first three consecutive times the fault occurs.

NOTE: It is highly recommended that the fault history be cleared after performing maintenance or servicing the air handler.

SERVICING

Network Troubleshooting

The ComfortNet™ system is a fully communicating system, and thus, constitutes a network. Occasionally the need to troubleshoot the network may arise. The integrated air handler control has some on-board tools that may be used to troubleshoot the network. These tools are: red communications LED, green receive (Rx) LED, and learn button. Refer to the Communications Troubleshooting Chart and Air Handler Diagnostic Codes below for error codes, possible causes and corrective actionS.

• Red communications LED – Indicates the status of the network. The table below indicates the LED status and the corresponding potential problem.

• Green receive communication LED – Indicates network traffic. The table below indicates the LED status and the corresponding potential problem.

• Learn button – Used to reset the network. Depress the button for approximately 2 seconds to reset the network.

COMMUNICATIONS TROUBLESHOOTING CHART

LED	LED Status	Indication	Possible Causes	Corrective Action(s)	Notes & Cautions
Red Communications LED	Off	• Normal condition	• None	• None	• None
	1 Flash	• Communications Failure	• Communications Failure	• Depress Learn Button • Verify that bus BIAS and TERM dipswitches are in the ON position.	• Depress once quickly for a power-up reset • Depress and hold for 2 seconds for an out-of-box reset
	2 Flashes	• Out-of-box reset	• Control power up • Learn button depressed	• None	• None
Green Receive LED	Off	• No power • Communications error	• No power to air handler • Open fuse • Communications error	• Check fuses and circuit breakers; replace/reset • Replace blown fuse • Check for shorts in low voltage wiring in air handler/system • Reset network by depressing learn button • Check data 1/ data 2 voltages	• Turn power OFF prior to repair
	1 Steady Flash	• No network found	• Broken/ disconnected data wire(s) • Air handler is installed as a non-communicating/ traditional system	• Check communications wiring (data 1/ data 2 wires) • Check wire connections at terminal block • Verify air handler installation type (non-communicating/ traditional or communicating) • Check data 1/ data 2 voltages	• Turn power OFF prior to repair • Verify wires at terminal blocks are securely twisted together prior to inserting into terminal block • Verify data1 and data voltages as described above
	Rapid Flashing	• Normal network traffic	• Control is “talking” on network as expected	• None	• None
	On Solid	• Data 1/ Data 2 miss-wire	• Data 1 and data 2 wires reversed at air handler, thermostat, or ComfortNet™ compatible outdoor AC/HP • Short between data 1 and data 2 wires • Short between data 1 or data 2 wires and R (24VAC) or C (24VAC common)	• Check communications wiring (data 1/ data 2 wires) • Check wire connections at terminal block • Check data 1/ data 2 voltages	• Turn power OFF prior to repair • Verify wires at terminal blocks are securely twisted together prior to inserting into terminal block • Verify data1 and data voltages as described above

7 SEGMENT LED (characters will alternate)	DESCRIPTION OF CONDITION
(no display)	INTERNAL CONTROL FAULT / NO POWER
On	STANDBY, WAITING FOR INPUTS
Ec	HEATER KIT TOO LARGE, TOO SMALL, OR NO MATCH
E5	FUSE OPEN
EF	AUXILIARY SWITCH OPEN
d0	DATA NOT ON NETWORK
d1	INVALID DATA ON NETWORK
d4	INVALID MEMORY CARD DATA
b0	BLOWER MOTOR NOT RUNNING
b1	BLOWER MOTOR COMMUNICATION ERROR
b2	BLOWER MOTOR HP MISMATCH
b3	BLOWER MOTOR OPERATING IN POWER, TEMP., OR SPEED LIMIT
b4	BLOWER MOTOR CURRENT TRIP OR LOST ROTOR
b5	BLOWER MOTOR ROTOR LOCKED
b6	OVER/UNDER VOLTAGE TRIP OR OVER TEMPERATURE TRIP
b7	INCOMPLETE PARAMETER SENT TO MOTOR
b9	LOW INDOOR AIRFLOW
C1	LOW STAGE COOL - LEGACY MODE ONLY
C2	HIGH STAGE COOL - LEGACY MODE ONLY
P1	LOW STAGE HEAT PUMP HEAT - LEGACY MODE ONLY
P2	HIGH STAGE HEAT PUMP HEAT - LEGACY MODE ONLY
h1	EMERGENCY HEAT LOW - COMMUNICATING MODE ONLY
h2	EMERGENCY HEAT HIGH - COMMUNICATING MODE ONLY
FC	FAN COOL - COMMUNICATING MODE ONLY
FH	FAN HEAT - COMMUNICATING MODE ONLY
F	FAN ONLY
H1	ELECTRIC HEAT LOW
H2	ELECTRIC HEAT HIGH
dF	DEFROST - COMMUNICATING MODE ONLY (Note: defrost is displayed as H1 in a legacy setup)
GREEN CFM LED - EACH FLASH REPRESENTS 100CFM (USE FOR AIRFLOW APPROXIMATION ONLY) - EXAMPLE: 8 FLASHES = 800CFM	

0140A00070-A

Symptoms of Abnormal Operation (Communicating & Non-communicating Thermostat)	Diagnostic/Status LED Codes	Fault Description	ComfortNet ™ Thermostat Only Message	ComfortNet ™ Thermostat Only Code	Possible Causes	Corrective Actions	Notes & Cautions
• LED display is ON continuously	ON	• Normal operation	None	None	• Normal operation	• None	• Normal operation
• Electric heaters fail to energize on a call for W1 or Auxiliary/Emergency heat • Integrated control module LED display provides the indicated error code. • ComfortNet thermostat "Call for Service" icon illuminated • ComfortNet thermostat scrolls "Check Air Handler" message	1 Flash	• Heater kit selected via dipswitches is too large for heater kits specified in shared data set	*HTR TOO LARGE*	*Ec*	• Heater kit selected via dipswitches is too large for heater kits in shared data set	• Verify electric heat dipswitch settings • Verify the installed electric heater is valid for the air handler. Check nameplate or Specification Sheet applicable to your model* for allowable heater kit(s). • Verify shared data set is correct for the specific model. Re-populate data using correct memory card if required.	• Turn power OFF prior to repair. • Use memory card for the specific model. • Insert memory card BEFORE turning power ON. Memory card may be removed after data is loaded. • Turn power OFF before removing memory card. • Error code will be cleared once data is loaded.
• Electric heat airflow is higher than expected on a call for W1 or Auxiliary/Emergency heat • Integrated control module LED display provides the indicated error code.	1 Flash	• Heater kit selected via dipswitches is too small for heater kits specified in shared data set	*HTR TOO SMALL*	*Ec*	• Heater kit selected via dipswitches is too small for heater kits in shared data set	• Verify electric heat dipswitch settings • Verify the installed electric heater is valid for the air handler. Check nameplate or Specification Sheet applicable to your model* for allowable heater kit(s). • Verify shared data set is correct for the specific model. Re-populate data using correct memory card if required.	• Turn power OFF prior to repair. • Use memory card for the specific model. • Insert memory card BEFORE turning power ON. Memory card may be removed after data is loaded. • • Turn power OFF before removing memory card. • Error code will be cleared once data is loaded.
• Electric heat airflow is higher than expected on a call for W1 or Auxiliary/Emergency heat • Integrated control module LED display provides the indicated error code.	1 Flash	• Heater kit selected via dipswitches does not heater kits specified in shared data set	*NO HTR MATCH*	*Ec*	• Heater kit selected via dipswitches is doesn't match heater kits in shared data set	• Verify electric heat dipswitch settings • Verify the installed electric heater is valid for the air handler. Check nameplate or Specification Sheet applicable to your model* for allowable heater kit(s). • Verify shared data set is correct for the specific model. Re-populate data using correct memory card if required.	• Turn power OFF prior to repair. • Use memory card for the specific model. • Insert memory card BEFORE turning power ON. Memory card may be removed after data is loaded. • Turn power OFF before removing memory card. • Error code will be cleared once data is loaded.
• No air handler operation. • Integrated control module LED display provides the indicated error code. • ComfortNet thermostat displays "Battery Power"	5 Flashes	• Open Fuse	Not Displayed	Not Displayed	• Short in low voltage wiring	• Locate and correct short in low voltage wiring	• Turn power OFF prior to repair. • Replace fuse with 3-amp automotive type
• Air handler fails to operate • Integrated control module LED display provides no signal. • ComfortNet thermostat "Call for Service" icon illuminated • ComfortNet thermostat scrolls "Check Air Handler" message	None	• No 208/230 volt power to air handler or no 24 volt power to integrated control module • Blown fuse or circuit breaker • Integrated control module has an internal fault.	*INTERNAL FAULT*	*EE*	• Manual disconnect switch OFF or 24 volt wire improperly connected or loose • Blown fuse or circuit breaker • Integrated control module has an internal fault	• Assure 208/230 volt and 24 volt power to air handler and integrated control module. • Check integrated control module fuse (3A). Replace if necessary. • Check for possible shorts in 208/230 volt and 24 volt circuits. Repair as necessary. • Replace bad integrated control module.	• Turn power OFF prior to repair. • Replace integrated control module fuse with 3A automotive fuse. • Replace integrated control module with correct replacement part • Read precautions in "Electrostatic Discharge" section of manual.

Symptoms of Abnormal Operation (Communicating & Non-communicating Thermostat)	Diagnostic/Status LED Codes	Fault Description	ComfortNet ™ Thermostat Only		Possible Causes	Corrective Actions	Notes & Cautions
			Message	Code			
• Air handler fails to operate. • Integrated control module LED display provides indicated error code. • ComfortNet thermostat "Call for Service" icon illuminated. • ComfortNet thermostat scrolls "Check Air Handler" message.	9 Flashes	• Data not yet on network.	*NO NET DATA*	*d0*	• Air handler does not contain any shared data.	• Populate shared data set using memory card.	• Turn power OFF prior to repair • Use memory card for the specific model. • Insert memory card BEFORE turning power ON. Memory card may be removed after data is loaded. • Turn power OFF before removing memory card. • Error code will be cleared once data is loaded.
• Operation different than expected or no operation. • Integrated control module LED display provides indicated error code. • ComfortNet thermostat "Call for Service" icon illuminated. • ComfortNet thermostat scrolls "Check Air Handler" message.	11 Flashes	• Invalid memory card data.	*INVALID MC DATA*	*d4*	• Shared data set on memory card has been rejected by integrated control module	• Verify shared data set is correct for the specific model. Re-populate data using correct memory card if required.	• Turn power OFF prior to repair • Use memory card for the specific model. • Insert memory card BEFORE turning power ON. Memory card may be removed after data is loaded. • Turn power OFF before removing memory card. • Error code will be cleared once data is loaded.

Symptoms of Abnormal Operation (Communicating & Non-communicating Thermostat)	Diagnostic/Status LED Codes	Fault Description	ComfortNet ™ Thermostat Only Message	ComfortNet ™ Thermostat Only Code	Possible Causes	Corrective Actions	Notes & Cautions
• Air handler fails to operate. • Integrated control module LED display provides indicated error code. • ComfortNet thermostat "Call for Service" icon illuminated. • ComfortNet thermostat scrolls "Check Air Handler" message.	6 Flashes	• Circulator blower motor is not running when it should be running.	*MOTOR NOT RUN*	*b0*	• Loose wiring connection at circulator motor power leads or circulator motor power leads disconnected. • Failed circulator blower motor.	• Tighten or correct wiring connection. • Check circulator blower motor. Replace if necessary.	• Turn power OFF prior to repair • Replace circulator motor with correct replacement part.
• Air handler fails to operate. • Integrated control module LED display provides indicated error code. • ComfortNet thermostat "Call for Service" icon illuminated. • ComfortNet thermostat scrolls "Check Air Handler" message.	6 Flashes	• Integrated control module has lost communications with circulator blower motor.	*MOTOR COMM*	*b1*	• Loose wiring connection at circulator motor control leads. • Failed circulator blower motor. • Failed integrated control module.	• Tighten or correct wiring connection. • Check circulator blower motor. Replace if necessary. • Check integrated control module. Replace if necessary.	• Turn power OFF prior to repair • Replace circulator motor with correct replacement part. • Replace integrated control module with correct replacement part.
• Air handler fails to operate. • Integrated control module LED display provides indicated error code. • ComfortNet thermostat "Call for Service" icon illuminated. • ComfortNet thermostat scrolls "Check Air Handler" message.	6 Flashes	• Circulator blower motor horse power in shared data set does not match circulator blower motor horse power.	*MOTOR MISMATCH*	*b2*	• Incorrect circulator blower motor in air handler. • Incorrect shared data set in integrated control module.	• Verify circulator blower motor horse power is the same specified for the specific air handler model. Replace is necessary. • Verify shared data set is correct for the specific model. Re-populate data using correct memory card if required.	• Turn power OFF prior to repair • Replace motor with correct replacement part. • Use memory card for the specific model • Insert memory card BEFORE turning power ON. Memory card may be removed after data is loaded. • Turn power OFF before removing memory card. • Error code will be cleared once shared data and motor horse power match.
• Air handler operates at reduced performance. • Airflow delivered is less than expected. • Integrated control module LED display provides b3 error code.	6 Flashes	• Circulator blower motor is operating in a power, temperature, or speed limiting condition.	*MOTOR LIMITS*	*b3*	• Blocked filters. • Restrictive ductwork. • Undersized ductwork. • High ambient temperatures.	• Check filters for blockage. Clean filters or remove obstruction. • Check ductwork for blockage. Remove obstruction. Verify all registers are fully open. • Verify ductwork is appropriately sized for system. Resize/replace ductwork if necessary. • See "Installation Instructions" for installation requirements.	• Turn power OFF prior to repair.
• Air handler fails to operate. • Integrated control module LED display provides indicated error code. • ComfortNet thermostat "Call for Service" icon illuminated. • ComfortNet thermostat scrolls "Check Air Handler" message.	6 Flashes	• Circulator blower motor senses a loss rotor control. • Circulator blower motor senses high current.	*MOTOR TRIPS*	*b4*	• Abnormal motor loading, sudden change in speed or torque, sudden blockage of air handler/coil air inlet or outlet. • High loading conditions, blocked filters, very restrictive ductwork, blockage of air handler/coil air inlet or outlet.	• Check filters, filter grills/registers, duct system, and air handler/coil air inlet/outlet for blockages.	• Turn power OFF prior to repair.

Symptoms of Abnormal Operation (Communicating & Non-communicating Thermostat)	Diagnostic/Status LED Codes	Fault Description	ComfortNet ™ Thermostat Only		Possible Causes	Corrective Actions	Notes & Cautions
			Message	Code			
• Air handler fails to operate. • Integrated control module LED display provides indicated error code. • ComfortNet™ thermostat "Call for Service" icon illuminated. • ComfortNet thermostat scrolls "Check Air Handler" message.	6 Flashes	• Circulator blower motor fails to start 10 consecutive times.	*MTR LCKD ROTOR*	*b5*	• Obstruction in circulator blower housing. • Seized circulator blower motor bearings. • Failed circulator blower motor.	• Check circulator blower for obstructions. Remove and repair/replace wheel/motor if necessary. • Check circulator blower motor shaft rotation and motor. Replace motor if necessary.	• Turn power OFF prior to repair • Replace motor with correct replacement part. • Replace wheel with correct replacement part.
• Air handler fails to operate. • Integrated control module LED display provides indicated error code. • ComfortNet thermostat "Call for Service" icon illuminated. • ComfortNet thermostat scrolls "Check Air Handler" message.	6 Flashes	• Circulator blower motor shuts down for over or under voltage condition. • Circulator blower motor shuts down due to over temperature condition on power module.	*MOTOR VOLTS*	*b6*	• High AC line voltage to air handler. • Low AC line voltage to air handler. • High ambient temperatures.	• Check power to air handler. Verify line voltage to blower is within the range specified on the air handler rating plate. • See "Installation Instructions" for installation requirements.	• Turn power OFF prior to repair.
• Air handler fails to operate. • Integrated control module LED display provides indicated error code. • ComfortNet thermostat "Call for Service" icon illuminated. • ComfortNet thermostat scrolls "Check Air Handler" message.	6 Flashes	• Circulator blower motor does not have enough information to operate properly. • Motor fails to start 40 consecutive times.	*MOTOR PARAMS*	*b7*	• Error with integrated control module. • Motor has a locked rotor condition.	• Check integrated control module. Verify control is populated with correct shared data set. See data errors above for details. • Check for locked rotor condition (see error code above for details).	• Turn power OFF prior to repair. • Replace with correct replacement part(s). • Use memory card for the specific model.
• Air handler operates at reduced performance or operates on low stage when high stage is expected. • Integrated control module LED display provides indicated error code.	6 Flashes	• Airflow is lower than demanded.	*LOW ID AIRFLOW*	*b9*	• Blocked filters. • Restrictive ductwork. • Undersized ductwork.	• Check filters for blockage. Clean filters or remove obstruction. • Check ductwork for blockage. Remove obstruction. Verify all registers are fully open. • Verify ductwork is appropriately sized for system. Resize/replace ductwork if necessary.	• Turn power OFF prior to repair.

Symptoms of Abnormal Operation (Legacy & ComfortNet™ Thermostat)	7-Segment LED Codes *Characters Will Alternate*	Fault Description	ComfortNet™ Thermostat Only		Possible Causes	Corrective Actions	Notes & Cautions
			Message	Code			
• LED display is ON continuously	ON	• Normal operation	None	None	• Normal operation	• None	• Normal operation
• Electric heaters fail to energize on a call for W1 or Auxiliary/Emergency heat • Integrated control module LED display provides the indicated error code. • ComfortNet™ thermostat "Call for Service" icon illuminated • ComfortNet™ thermostat scrolls "Check Air Handler" message	EC	• Heater kit selected via dipswitches is too large for heater kits specified in shared data set	*HTR TOO LARGE*	*EC*	• Heater kit selected via dipswitches is too large for heater kits in shared data set	• Verify electric heat dipswitch settings • Verify the installed electric heater is valid for the air handler blower. Check nameplate or Specification Sheet applicable to your model* for allowable heater kit(s). • Verify shared data set is correct for the specific model. Re-populate data using correct memory card if required.	• Turn power OFF prior to repair. • Use memory card for the specific model. • Insert memory card BEFORE turning power ON. Memory card may be removed after data is loaded. • Turn power off before removing memory card.
• Electric heat airflow is higher than expected on a call for W1 or Auxiliary/Emergency heat • Integrated control module LED display provides the indicated error code.	EC	• Heater kit selected via dipswitches is too small for heater kits specified in shared data set	*HTR TOO SMALL*	*EC*	• Heater kit selected via dipswitches is too small for heater kits in shared data set	• Verify electric heat dipswitch settings • Verify the installed electric heater is valid for the air handler blower. Check nameplate or Specification Sheet applicable to your model* for allowable heater kit(s). • Verify shared data set is correct for the specific model. Re-populate data using correct memory card if required.	• Turn power OFF prior to repair. • Use memory card for the specific model. • Insert memory card BEFORE turning power ON. Memory card may be removed after data is loaded. • Turn power off before removing memory card.
• Electric heat airflow is higher than expected on a call for W1 or Auxiliary/Emergency heat • Integrated control module LED display provides the indicated error code.	EC	• Heater kit selected via dipswitches does not heater kits specified in shared data set	*NO HTR MATCH*	*EC*	• Heater kit selected via dipswitches is doesn't match heater kits in shared data set	• Verify electric heat dipswitch settings • Verify the installed electric heater is valid for the air handler blower. Check nameplate or Specification Sheet applicable to your model* for allowable heater kit(s). • Verify shared data set is correct for the specific model. Re-populate data using correct memory card if required.	• Turn power OFF prior to repair. • Use memory card for the specific model. • Insert memory card BEFORE turning power ON. Memory card may be removed after data is loaded. • Turn power off before removing memory card.
• Integrated control module LED display EF error code. • ComfortNet™ thermostat "Call for Service".	EF	• Aux switch open	Aux Alarm Fault	*EF*	• High water level in the evaporation coil.	• Check overflow pan and service	• Turn power OFF prior to service.

Symptoms of Abnormal Operation (Legacy & ComfortNet™ Thermostat)	7-Segment LED Codes *Characters Will Alternate*	Fault Description	ComfortNet™ Thermostat Only Message	Code	Possible Causes	Corrective Actions	Notes & Cautions
• Air handler blower fails to operate • Integrated control module LED display provides no signal. • ComfortNet™ thermostat "Call for Service" icon illuminated • ComfortNet™ thermostat scrolls "Check Air Handler" message	No Display	• No 208/230 volt power to air handler blower or no 24 volt power to integrated control module • Blown fuse or circuit breaker • Integrated control module has an internal fault.	*INTERNAL FAULT*	*EE*	• Manual disconnect switch OFF or 24 volt wire improperly connected or loose • Blown fuse or circuit breaker • Integrated control module has an internal fault	• Assure 208/230 volt and 24 volt power to air handler blower and integrated control module. • Check integrated control module fuse (3A). Replace if necessary. • Check for possible shorts in 208/230 volt and 24 volt circuits. Repair as necessary. • Replace bad integrated control module.	• Turn power OFF prior to repair. • Replace integrated control module fuse with 3A automotive fuse. • Replace integrated control module with correct replacement part • Read precautions in "Electrostatic Discharge" section of manual.
• Air handler blower fails to operate. • Integrated control module LED display provides indicated error code. • ComfortNet™ thermostat "Call for Service" icon illuminated. • ComfortNet™ thermostat scrolls "Check Air Handler" message.	d0	• Data not yet on network.	*NO NET DATA*	*d0*	• Air handler blower does not contain any shared data.	• Populate shared data set using memory card.	• Turn power OFF prior to repair • Use memory card for the specific model. • Insert memory card BEFORE turning power ON. Memory card may be removed after data is loaded. • Error code will be cleared once data is loaded. • Turn power off before removing memory card
• Air handler blower fails to operate. • Integrated control module LED display provides indicated error code. • ComfortNet™ thermostat "Call for Service" icon illuminated. • ComfortNet™ thermostat scrolls "Check Air Handler" message.	d1	• Invalid data on network.	*INVALID DATA*	*d1*	• Air handler blower does not contain an appropriate shared data set.	• Populate correct shared data set using memory card.	• Turn power OFF prior to repair • Use memory card for the specific model. • Insert memory card BEFORE turning power ON. Memory card may be removed after data is loaded. • Error code will be cleared once data is loaded.
• Operation different than expected or no operation. • Integrated control module LED display provides indicated error code. • ComfortNet™ thermostat "Call for Service" icon illuminated. • ComfortNet™ thermostat scrolls "Check Air Handler" message.	d4	• Invalid memory card data.	*INVALID MC DATA*	*d4*	• Shared data set on memory card has been rejected by integrated control module	• Verify shared data set is correct for the specific model. Re-populate data using correct memory card if required.	• Turn power OFF prior to repair • Use memory card for the specific model. • Insert memory card BEFORE turning power ON. Memory card may be removed after data is loaded. • Error code will be cleared once data is loaded. • Turn power off before removing memory card

Symptoms of Abnormal Operation (Legacy & ComfortNet™ Thermostat)	7-Segment LED Codes *Characters Will Alternate*	Fault Description	ComfortNet™ Thermostat Only Message	ComfortNet™ Thermostat Only Code	Possible Causes	Corrective Actions	Notes & Cautions
• Air handler blower fails to operate. • Integrated control module LED display provides indicated error code. • ComfortNet™ thermostat "Call for Service" icon illuminated. • ComfortNet™ thermostat scrolls "Check Air Handler" message.	b0	• Circulator blower motor is not running when it should be running.	*MOTOR NOT RUN*	*b0*	• Loose wiring connection at circulator motor power leads or circulator motor power leads disconnected. • Failed circulator blower motor.	• Tighten or correct wiring connection. • Check circulator blower motor. Replace if necessary.	• Turn power OFF prior to repair • Replace circulator motor with correct replacement part.
• Air handler blower fails to operate. • Integrated control module LED display provides indicated error code. • ComfortNet™ thermostat "Call for Service" icon illuminated. • ComfortNet™ thermostat scrolls "Check Air Handler" message.	b1	• Integrated control module has lost communications with circulator blower motor.	*MOTOR COMM*	*b1*	• Loose wiring connection at circulator motor control leads. • Failed circulator blower motor. • Failed integrated control module.	• Tighten or correct wiring connection. • Check circulator blower motor. Replace if necessary. • Check integrated control module. Replace if necessary.	• Turn power OFF prior to repair • Replace circulator motor with correct replacement part. • Replace integrated control module with correct replacement part.
• Air handler blower fails to operate. • Integrated control module LED display provides indicated error code. • ComfortNet™ thermostat "Call for Service" icon illuminated. • ComfortNet™ thermostat scrolls "Check Air Handler" message.	b2	• Circulator blower motor horse power in shared data set does not match circulator blower motor horse power.	*MOTOR MISMATCH*	*b2*	• Incorrect circulator blower motor in air handler blower. • Incorrect shared data set in integrated control module.	• Verify circulator blower motor horse power is the same specified for the specific air handler blower model. Replace is necessary. • Verify shared data set is correct for the specific model. Re-populate data using correct memory card if required.	• Turn power OFF prior to repair • Replace motor with correct replacement part. • Use memory card for the specific model • Insert memory card BEFORE turning power ON. Memory card may be removed after data is loaded. • Error code will be cleared once shared data and motor horse power match. • Turn power off before removing memory card
• Air handler blower operates at reduced performance. • Airflow delivered is less than expected. • Integrated control module LED display provides b3 error code.	b3	• Circulator blower motor is operating in a power, temperature, or speed limiting condition.	*MOTOR LIMITS*	*b3*	• Blocked filters. • Restrictive ductwork. • Undersized ductwork. • High ambient temperatures.	• Check filters for blockage. Clean filters or remove obstruction. • Check ductwork for blockage. Remove obstruction. Verify all registers are fully open. • Verify ductwork is appropriately sized for system. Resize/replace ductwork if necessary. • See "Installation Instructions" for installation requirements.	• Turn power OFF prior to repair.
• Air handler blower fails to operate. • Integrated control module LED display provides indicated error code. • ComfortNet™ thermostat "Call for Service" icon illuminated. • ComfortNet™ thermostat scrolls "Check Air Handler" message.	b4	• Circulator blower motor senses a loss rotor control. • Circulator blower motor senses high current.	*MOTOR TRIPS*	*b4*	• Abnormal motor loading, sudden change in speed or torque, sudden blockage of air handler blower/coil air inlet or outlet. • High loading conditions, blocked filters, very restrictive ductwork, blockage of air handler blower/coil air inlet or outlet.	• Check filters, filter grills/registers, duct system, and air handler blower/coil air inlet/outlet for blockages.	• Turn power OFF prior to repair.

Symptoms of Abnormal Operation (Legacy & ComfortNet™ Thermostat)	7-Segment LED Codes *Characters Will Alternate*	Fault Description	ComfortNet™ Thermostat Only Message	Code	Possible Causes	Corrective Actions	Notes & Cautions
• Air handler blower fails to operate. • Integrated control module LED display provides indicated error code. • ComfortNet™ thermostat "Call for Service" icon illuminated. • ComfortNet™ thermostat scrolls "Check Air Handler" message.	b5	• Circulator blower motor fails to start 10 consecutive times.	*MTR LCKD ROTOR*	*b5*	• Obstruction in circulator blower housing. • Seized circulator blower motor bearings. • Failed circulator blower motor.	• Check circulator blower for obstructions. Remove and repair/replace wheel/motor if necessary. • Check circulator blower motor shaft rotation and motor. Replace motor if necessary.	• Turn power OFF prior to repair • Replace motor with correct replacement part. • Replace wheel with correct replacement part.
• Air handler blower fails to operate. • Integrated control module LED display provides indicated error code. • ComfortNet™ thermostat "Call for Service" icon illuminated. • ComfortNet™ thermostat scrolls "Check Air Handler" message.	b6	• Circulator blower motor shuts down for over or under voltage condition. • Circulator blower motor shuts down due to over temperature condition on power module.	*MOTOR VOLTS*	*b6*	• High AC line voltage to air handler blower. • Low AC line voltage to air hander blower. • High ambient temperatures.	• Check power to air handler blower. Verify line voltage to blower is within the range specified on the air handler blower rating plate. • See "Installation Instructions" for installation requirements.	• Turn power OFF prior to repair.
• Air handler blower fails to operate. • Integrated control module LED display provides indicated error code. • ComfortNet™ thermostat "Call for Service" icon illuminated. • ComfortNet™ thermostat scrolls "Check Air Handler" message.	b7	• Circulator blower motor does not have enough information to operate properly. Motor fails to start 40 consecutive times.	*MOTOR PARAMS*	*b7*	• Error with integrated control module. • Motor has a locked rotor condition.	• Check integrated control module. Verify control is populated with correct shared data set. See data errors above for details. • Check for locked rotor condition (see error code above for details).	• Turn power OFF prior to repair. • Replace with correct replacement part(s). • Use memory card for the specific model. • Insert memory card BEFORE turning power ON. • Memory card may be removed after data is loaded • Turn power off before removing memory card.
• Air handler blower operates at reduced performance or operates on low stage when high stage is expected. • Integrated control module LED display provides indicated error code.	b9	• Airflow is lower than demanded.	*LOW ID AIRFLOW*	*b9*	• Blocked filters. • Restrictive ductwork. • Undersized ductwork.	• Check filters for blockage. Clean filters or remove obstruction. • Check ductwork for blockage. Remove obstruction. Verify all registers are fully open. • Verify ductwork is appropriately sized for system. Resize/replace ductwork if necessary.	• Turn power OFF prior to repair.

SERVICING

S-4 CHECKING TRANSFORMER AND CONTROL CIRCUIT

WARNING

HIGH VOLTAGE!
Disconnect ALL power before servicing or installing. Multiple power sources may be present. Failure to do so may cause property damage, personal injury or death.

A step-down transformer (208/240 volt primary to 24 volt secondary) is provided with each indoor unit. This allows ample capacity for use with resistance heaters. The outdoor sections do not contain a transformer (see note below).

NOTE: ComfortNet™ ready condensing units may have an optional 240VAC to 24VAC transformer installed. This transformer provides 24VAC power to the unitary (UC) control in some communicating system installation scenarios.

WARNING

Disconnect ALL power before servicing.

1. Remove control panel cover, or etc., to gain access to transformer.

With power ON:

WARNING

Line Voltage now present.

2. Using a voltmeter, check voltage across secondary voltage side of transformer (R to C).
3. No voltage indicates faulty transformer, bad wiring, or bad splices.
4. Check transformer primary voltage at incoming line voltage connections and/or splices.
5 If line voltage available at primary voltage side of transformer and wiring and splices good, transformer is inoperative. Replace.

S-6 CHECKING TIME DELAY RELAY

Time delays are used in electric heaters to sequence in multiple electric heaters.

WARNING

Disconnect ALL power before servicing.

1. Tag and disconnect all wires from male spade connections of relay.
2. Using an ohmmeter, measure the resistance across terminals H1 and H2. Should read approximately 150 ohms.
3. Using an ohmmeter, check for continuity across terminals 3 and 1, and 4 and 5.
4. Apply 24 volts to terminals H1 and H2. Check for continuity across other terminals - should test continuous. If not as above - replace.

NOTE: The time delay for the contacts to make will be approximately 20 to 50 seconds and to open after the coil is de-energized is approximately 40 to 90 seconds.

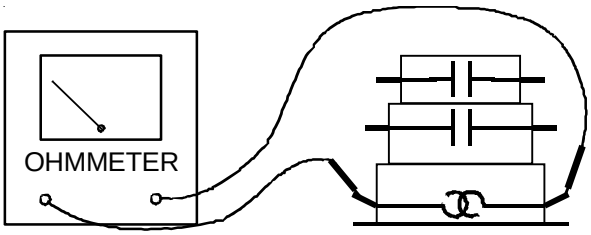

TESTING COIL CIRCUIT

S-8A CHECKING UNITARY (UC) CONTROL COMPRESSOR CONTACTOR/RELAY CONTACTS

WARNING

Disconnect ALL power before servicing.

1. Connect voltmeter to lugs (L2) and (C).
2. With power ON, provide a call for cool or heat pump to energize the on-board compressor contactor/relay.

WARNING

Line Voltage now present.

3. Measure voltage across on-board compressor contactor/relay contacts.

   A. No voltage indicates the contacts are closed and the contactor/relay is functioning properly.

   B. A reading of approximately half of the supply voltage (example: 115VAC for 230VAC) indicates the relay is open. Replace UC control if relay does not close.

NOTE: The unitary (UC) control has a built-in short cycle delay. Ensure short cycle delay has elapsed before making voltage measurements.

SERVICING

S-9 CHECKING HIGH AND LOW VOLTAGE TO ECM MOTOR

WARNING

HIGH VOLTAGE!
Disconnect ALL power before servicing or installing. Multiple power sources may be present. Failure to do so may cause property damage, personal injury or death.

1. Measure voltage between black and brown motor leads. This should measure 208/230 volts depending on your power supply.
2. If voltage is present proceed to check fan relay contacts and voltage.

CHECKING FAN RELAY CONTACTS - ECM FAN MOTOR

1. Disconnect fan motor harness from plug on the UC board.
2. Energize the system in low stage and check voltage:
   - Pin 5(Blue wire) to Pin 3(Yellow wire) = 24VAC
3. Energize the system in high stage and check voltage:
   - Pin 5(Blue wire) to Pin 3(Yellow wire) = 24VAC
   - Pin 5(Blue wire) to Pin 1(White wire) = 24 VAC.

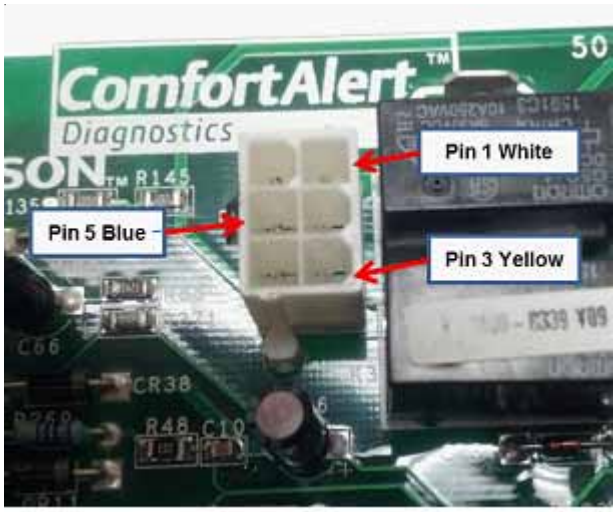

4. If voltage is present at these pins plug harness into plug on PC board and check voltages at motor to test for broken wires.
5. If all voltages are present motor is defective and needs to be replaced.

CHECKING RELAY CONTACTS - PSC FAN MOTOR

WARNING

HIGH VOLTAGE!
Disconnect ALL power before servicing or installing. Multiple power sources may be present. Failure to do so may cause property damage, personal injury or death.

1. Disconnect the motor leads from 6-circuit fan motor wire harness.
2. Connect a voltmeter between circuit 3 and circuits 2 (low speed) or 1 (high speed).

NOTE: Circuit 3 is connected directly to L2.

3. Energize the system at low or high stage.

WARNING

Line Voltage now present.

4. The measured voltage between circuit 3 and circuits 2 or 1 should be approximately 0VAC, which indicates the relay contacts are closed. A voltage measurement of approximately 115VAC indicates the relay is open. Replace the control if the relay checks open when it should be closed.

S-10A *COPELAND COMFORT ALERT™ - UNITARY (UC) CONTROL DIAGNOSTICS*

Applies to ASXC, ASZC, and DSZC 2-stage models

WARNING

HIGH VOLTAGE!
Disconnect ALL power before servicing or installing. Multiple power sources may be present. Failure to do so may cause property damage, personal injury or death.

The Copeland Comfort Alert™ diagnostics are fully integrated into the unitary (UC) control. The UC control and integraged Comfort Alert™ diagnostics provide around-the-clock monitoring for common electrical problems, compressor defects and broad system faults. If a problem is detected, LED indicators flash the proper alert codes to help you quickly pinpoint the problem.

The diagnostic tables on following pages provide detailed information regarding the system symptons, indicators (LED and thermostat), potential problem(s), and corrective actions. The diagnostic information applies to systems wired as 24VAC traditional (legacy) systems and systems wired as communicating systems with the CTK0* communicating thermostat.

Symptoms of Abnormal Operation (Legacy & ComfortNet™ Thermostat)	Diagnostic/Status LED Codes				Fault Description	ComfortNet™ Thermostat Only		Possible Causes	Corrective Actions	Notes & Cautions
	Green	Yellow	Red	Red Y1		Message	Code			
• Very long run time. • Four consecutive compressor protector trips with average run time between trips greater than 3 hours. • Compressor operating at high speed and outdoor fan operating at low speed • Integrated control module diagnostic/status LED's display the indicated code.	OFF	1 Flash	OFF	ON if call present; OFF if no call	• Low Side Fault.	*LOW SIDE FAULT*	*01*	• Low refrigerant charge. • Restriction in liquid line. • Indoor blower motor failure. • Indoor thermostat set extremely low.	• Verify refrigerant charge; adjust as needed. • Check for restricted liquid line; repair/replace as needed. • Check indoor blower motor; repair/replace as needed. • Check indoor thermostat setting.	• Turn power OFF prior to repair. • Fault will clear after 30 consecutive normal cycles. • Fault may be cleared by cycling 24VAC to control. • Replace with correct replacement part(s).
• Compressor and outdoor fan are off. • Thermostat demand is present. • Integrated control module diagnostic/status LED's display the indicated code.	ON	1 Flash	OFF	ON if call present; OFF if no call	• Low Pressure CO Trip.	*LPS OPEN*	*01*	• Low refrigerant charge. • Restriction in liquid line. • Indoor blower motor failure. • Indoor thermostat set extremely low.	• Verify refrigerant charge; adjust as needed. • Check for restricted liquid line; repair/replace as needed. • Check indoor blower motor; repair/replace as needed. • Check low pressure switch; repair/replace as needed. • Check indoor thermostat setting.	• Turn power OFF prior to repair. • Replace with correct replacement part(s).
• Compressor and outdoor fan are off. • Low pressure switch trip 3 times within same thermostat demand. • Thermostat demand is present. • Integrated control module diagnostic/status LED's display the indicated code. • ComfortNet™ thermostat "Call for Service" icon illuminated. • ComfortNet™ thermostat scrolls "Check Air Conditioner" or "Check Heat Pump" message.	ON	1 Flash	ON	ON if call present; OFF if no call	• LPCO Lockout (3 Trips).	*LPS LOCKOUT*	*01*	• Low refrigerant charge. • Restriction in liquid line. • Indoor blower motor failure. • Indoor thermostat set extremely low.	• Verify refrigerant charge; adjust as needed. • Check for restricted liquid line; repair/replace as needed. • Check indoor blower motor; repair/replace as needed. • Check low pressure switch; repair/replace as needed. • Check indoor thermostat setting.	• Turn power OFF prior to repair. • Must clear fault by cycling 24VAC to control. • Replace with correct replacement part(s).

Symptoms of Abnormal Operation (Legacy & ComfortNet™ Thermostat)	Diagnostic/Status LED Codes				Fault Description	ComfortNet™ Thermostat Only		Possible Causes	Corrective Actions	Notes & Cautions
	Green	Yellow	Red	Red Y1		Message	Code			
• Four consecutive compressor protector trips with average run time between trips greater than 1 minute and less than 15 minutes. • Low pressure and high pressure switches are closed. • Integrated control module diagnostic/status LED's display the indicated code.	OFF	2 Flashes	OFF	ON if call present; OFF if no call	• High Side Fault	*HIGH SIDE FAULT*	*02*	• Blocked condenser coil. • Outdoor fan not running.	• Check and clean condenser coil. • Check outdoor fan motor; repair/replace as needed. • Check outdoor fan motor wiring; repair/replace as needed. • Check outdoor fan motor capacitor; replace as needed.	• Turn power OFF prior to repair. • Fault will clear after 4 consecutive normal cycles. • Fault may be cleared by cycling 24VAC to control. • Replace with correct replacement part(s).
• Compressor and outdoor fan are off. • Thermostat demand is present. • Integrated control module diagnostic/status LED's display the indicated code.	ON	2 Flashes	OFF	ON if call present; OFF if no call	• High Pressure CO Trip	*HPS OPEN*	*02*	• Blocked condenser coil. • Outdoor fan not running.	• Check and clean condenser coil. • Check outdoor fan motor; repair/replace as needed. • Check outdoor fan motor wiring; repair/replace as needed. • Check outdoor fan motor capacitor; replace as needed.	• Turn power OFF prior to repair. • Replace with correct replacement part(s).
• Compressor and outdoor fan are off. • Low pressure switch trip 3 times within same thermostat demand. • Thermostat demand is present. • Integrated control module diagnostic/status LED's display the indicated code. • ComfortNet™ thermostat "Call for Service" icon illuminated. • ComfortNet™ thermostat scrolls "Check Air Conditioner" or "Check Heat Pump" message.	ON	2 Flashes	ON	ON if call present; OFF if no call	• HPCO Lockout (3 Trips)	*HPS LOCKOUT*	*02*	• Blocked condenser coil. • Outdoor fan not running.	• Check and clean condenser coil. • Check outdoor fan motor; repair/replace as needed. • Check outdoor fan motor wiring; repair/replace as needed. • Check outdoor fan motor capacitor; replace as needed.	• Turn power OFF prior to repair. • Must clear fault by cycling 24VAC to control. • Replace with correct replacement part(s).
• Run time for last 4 cycles is less than 3 minutes each. • Compressor protector has not tripped. • Low pressure and high pressure switches are closed. • Integrated control module diagnostic/status LED's display the indicated code.	OFF	3 Flashes	OFF	ON if call present; OFF if no call	• Short Cycling	*CMPR SHRT CYCLE*	*03*	• Intermittent thermostat demand. • Faulty compressor relay.	• Check thermostat and thermostat wiring; repair/replace as needed. • Check compressor relay operation; replace control as needed.	• Turn power OFF prior to repair. • Fault will clear after 4 consecutive normal cycles. • Fault may be cleared by cycling 24VAC to control. • Replace with correct replacement part(s).

Symptoms of Abnormal Operation (Legacy & ComfortNet™ Thermostat)	Diagnostic/Status LED Codes				Fault Description	ComfortNet™ Thermostat Only		Possible Causes	Corrective Actions	Notes & Cautions
	Green	Yellow	Red	Red Y1		Message	Code			
• Compressor and outdoor fan are off. • Compressor protector trips four consecutive times. • Average run time between trips is less than 15 seconds. • Integrated control module diagnostic/status LED's display the indicated code. • ComfortNet™ thermostat "Call for Service" icon illuminated. • ComfortNet™ thermostat scrolls "Check Air Conditioner" or "Check Heat Pump" message.	OFF	4 Flashes	ON	ON if call present; OFF if no call	• Locked Rotor	*LOCKED ROTOR*	*04*	• Compressor bearings are seized. • Failed compressor run capacitor. • Faulty run capacitor wiring. • Low line voltage.	• Check compressor operation; repair/replace as needed. • Check run capacitor; replace as needed. • Check wiring; repair/replace as needed. • Verify line voltage is within range on rating plate; contact local utility is out of range.	• Turn power OFF prior to repair. • Must clear fault by cycling 24VAC to control. • Replace with correct replacement part(s).
• Compressor and outdoor fan are off for greater than 4 hours. • Low pressure and high pressure switches are closed. • Integrated control module diagnostic/status LED's display the indicated code. • ComfortNet™ thermostat "Call for Service" icon illuminated. • ComfortNet™ thermostat scrolls "Check Air Conditioner" or "Check Heat Pump" message.	OFF	5 Flashes	OFF	ON if call present; OFF if no call	• Open Circuit	*OPEN CIRCUIT*	*05*	• Power is disconnected. • Failed compressor protector. • Compressor not properly wired to control.	• Check circuit breakers and fuses. • Check wiring to unit; repair/replace as needed. • Check compressor; repair/replace as needed. • Check compressor wiring; repair/replace as needed.	• Turn power OFF prior to repair. • Fault will clear after 1 normal cycle. • Fault may be cleared by cycling 24VAC to control. • Replace with correct replacement part(s).
• Compressor and outdoor fan are off. • Low pressure and high pressure switches are closed. • Integrated control module diagnostic/status LED's display the indicated code. • ComfortNet™ thermostat "Call for Service" icon illuminated. • ComfortNet™ thermostat scrolls "Check Air Conditioner" or "Check Heat Pump" message.	OFF	6 Flashes	OFF	ON if call present; OFF if no call	• Open Start Circuit	*OPEN START*	*06*	• Compressor start winding is open. • Failed compressor run capacitor. • Faulty run capacitor wiring. • Compressor not properly wired to control. • Faulty compressor wiring.	• Check compressor; repair/replace as needed. • Check run capacitor; replace as needed. • Check wiring; repair/replace as needed.	• Turn power OFF prior to repair. • Fault will clear after 1 normal cycle. • Fault may be cleared by cycling 24VAC to control. • Replace with correct replacement part(s).
• Compressor and outdoor fan are off. • Low pressure and high pressure switches are closed. • Open start circuit has been detected 4 times with 5 minute delay between each detection. • Integrated control module diagnostic/status LED's display the indicated code. • ComfortNet™ thermostat "Call for Service" icon illuminated. • ComfortNet™ thermostat scrolls "Check Air Conditioner" or "Check Heat Pump" message.	OFF	6 Flashes	ON	ON if call present; OFF if no call	• Open Start Circuit Lockout	*OPEN START LOCK*	*06*	• Compressor start winding is open. • Failed compressor run capacitor. • Faulty run capacitor wiring. • Compressor not properly wired to control. • Faulty compressor wiring.	• Check compressor; repair/replace as needed. • Check run capacitor; replace as needed. • Check wiring; repair/replace as needed.	• Turn power OFF prior to repair. • Must clear fault by cycling 24VAC to control. • Replace with correct replacement part(s).

Symptoms of Abnormal Operation (Legacy & ComfortNet™ Thermostat)	Diagnostic/Status LED Codes				Fault Description	ComfortNet™ Thermostat Only		Possible Causes	Corrective Actions	Notes & Cautions
	Green	Yellow	Red	Red Y1		Message	Code			
• Compressor and outdoor fan are off. • Low pressure and high pressure switches are closed. • Integrated control module diagnostic/status LED's display the indicated code. • ComfortNet™ thermostat "Call for Service" icon illuminated. • ComfortNet™ thermostat scrolls "Check Air Conditioner" or "Check Heat Pump" message.	OFF	7 Flashes	OFF	ON if call present; OFF if no call	• Open Run Circuit	*OPEN RUN*	*07*	• Compressor run winding is open. • Compressor not properly wired to control. • Faulty compressor wiring.	• Check compressor; repair/replace as needed. • Check wiring; repair/replace as needed.	• Turn power OFF prior to repair. • Fault will clear after 1 normal cycle. • Fault may be cleared by cycling 24VAC to control. • Replace with correct replacement part(s).
• Compressor and outdoor fan are off. • Low pressure and high pressure switches are closed. • Open run circuit has been detected 4 times with 5 minute delay between each detection. • Integrated control module diagnostic/status LED's display the indicated code. • ComfortNet™ thermostat "Call for Service" icon illuminated. • ComfortNet™ thermostat scrolls "Check Air Conditioner" or "Check Heat Pump" message.	OFF	7 Flashes	ON	ON if call present; OFF if no call	• Open Run Circuit Lockout	*OPEN RUN LOCK*	*07*	• Compressor run winding is open. • Compressor not properly wired to control. • Faulty compressor wiring.	• Check compressor; repair/replace as needed. • Check wiring; repair/replace as needed.	• Turn power OFF prior to repair. • Must clear fault by cycling 24VAC to control. • Replace with correct replacement part(s).
• Air conditioner/heat pump may appear to be operating normally. • Compressor protector may be open (compressor and outdoor fan off). • Integrated control module diagnostic/status LED's display the indicated code.	OFF	8 Flashes	OFF	ON if call present; OFF if no call	• Low Line Voltage	*LOW LINE VOLT*	*08*	• Low line voltage.	• Check circuit breakers and fuses. • Verify unit is connected to power supply as specified on rating plate. • Correct low line voltage condition; contact local utility if needed.	• Turn power OFF prior to repair. • Control detects line voltage less than 185 VAC.
• Air conditioner/heat pump may appear to be operating normally. • Compressor protector may be open (compressor and outdoor fan off). • Integrated control module diagnostic/status LED's display the indicated code.	ON	8 Flashes	OFF	ON if call present; OFF if no call	• High Line Voltage	*HIGH LINE VOLT*	*08*	• High line voltage.	• Correct high line voltage condition; contact local utility if needed. • Verify unit is connected to power supply as specified on rating plate. • Correct low line voltage condition; contact local utility if needed.	• Turn power OFF prior to repair. • Control detects line voltage greater than 255 VAC.

Symptoms of Abnormal Operation (Legacy & ComfortNet™ Thermostat)	Diagnostic/Status LED Codes				Fault Description	ComfortNet™ Thermostat Only		Possible Causes	Corrective Actions	Notes & Cautions
	Green	Yellow	Red	Red Y1		Message	Code			
• Air conditioner/heat pump may appear to be operating normally. • Integrated control module diagnostic/status LED's display the indicated code.	OFF	9 Flashes	OFF	ON if call present; OFF if no call	• Low Pilot Voltage	*LOW SECOND VOLT*	*09*	• Control detects secondary voltage less than 18 VAC. • Transformer overloaded. • Low line voltage.	• Check fuse. • Correct low secondary voltage condition. • Check transformer; replace if needed.	• Turn power OFF prior to repair. • Fault will clear if secondary voltage rises above 21 VAC. • Replace with correct replacement part(s).
• Compressor is off. • Integrated control module diagnostic/status LED's display the indicated code.	OFF	ON	ON	ON if call present; OFF if no call	• Comp Protector Open	Not displayed	Not displayed	• No current through run or start windings. • Compressor run winding is open. • Compressor not properly wired to control. • Faulty compressor wiring. • Failed compressor run capacitor. • Faulty run capacitor wiring.	• Check compressor; repair/replace as needed. • Check wiring; repair/replace as needed. • Check run capacitor; replace as needed.	• Turn power OFF prior to repair. • Fault will clear after 1 normal cycle. • Fault may be cleared by cycling 24VAC to control. • Replace with correct replacement part(s).

7 SEGMENT LED (DS2)	7 SEGMENT LED (DS1)	DESCRIPTION OF CONDITION
0	n	Standby
0	1	Low Pressure CO Trip
0	1	Low Side Fault
0	2	High Pressure CO Trip
0	2	High Side Fault
0	3	Short Cycling
0	4	Locked Rotor
0	5	Open Circuit
0	6	Open Start Circuit
0	7	Open Run Circuit
0	8	No Line Voltage
0	9	Low Pilot Voltage
8	8	Power Up
A	2	Outdoor Air Temp Sensor Fault
A	3	Outdoor Coil Temp Sensor Fault *
b	0	No Indoor Airflow
b	9	Inadequate Airflow
C	3	Cool Mode Short Cycle Timer
C	1	Low Cool
C	2	High Cool
d	F	Defrost *
d	t	Max Defrost Time *
d	E	Forced Defrost *
d	0	Data not yet on Network
d	1	Invalid Data on Network
d	2	System Mis-Match
d	3	Configuration Mis-Match
d	4	Invalid Memory Card Data
E	E	Board Misoperation
E	5	Open Fuse
F	t	Field Test Mode
H	8	High Line Voltage
L	1	LPCO Lockout (3 Trips)
L	2	HPCO Lockout (3 Trips)
L	6	Open Start Circuit Lockout
L	7	Open Run Circuit Lockout
L	8	Low Line Voltage
P	3	Heat Mode Short Cycle Timer *
P	1	Low Heat *
P	2	High Heat *
P	0	Comp Protector Open
P	d	Pump Down

* CODE USED ON HEAT PUMP MODELS ONLY
NOTE 1: DS1, DS2 AND DS3 ARE LABELED ON THE CONTROL ABOVE EACH 7 SEGMENT LED DISPLAY
NOTE 2: 7 SEGMENT LED DISPLAY DS3 IS NOT USED

0140M00407-A

SYSTEM TROUBLESHOOTING

UNITARY DIAGNOSTIC CODES									
Symptoms of Abnormal Operation (Legacy & ComfortNet™ Thermostat)	Diagnostic/Status LED Display Codes			Fault Description	ComfortNet™ Thermostat Only		Possible Causes	Corrective Actions	Notes & Cautions
	Digit 3	Digit 2	Digit 1		Message	Code			
• Integrated control module diagnostic/status LED display shows the indicated code. • ComfortNet™ thermostat displays '---' in the temperature display area.	BLANK	A	2	• Outdoor air temp sensor fault	AIR SENSOR FLT	A2	• Shorted sensor. • Open sensor. • Sensor disconnected. • Sensor out of range.	• Check sensor connection. • Replace open/ shorted sensor.	• Turn power OFF prior to repair. • Replace with correct replacement part.
• Heat pump fails to operate in heating mode. • Integrated control module diagnostic/status LED display shows the indicated code. • ComfortNet™ thermostat displays error message.	BLANK	A	3	• Outdoor coil temp sensor fault	COIL SENSOR FLT	A3	• Shorted sensor • Open sensor. • Sensor. disconnected. • Sensor out of range.	• Check sensor connection. • Replace open/ shorted sensor.	• Turn power OFF prior to repair. • Replace with correct replacement part.
• Air conditioner/heat pump fails to operate. • Integrated control module diagnostic/status LED display shows the indicated code.	BLANK	E	5	• Open fuse	BLOWN FUSE	E5	• Short in low voltage wiring.	• Locate and correct short in low voltage wiring.	• Turn power OFF prior to repair. • Replace fuse with 3-amp automotive type.
• Air conditioner/heat pump fails to operate. • Integrated control module diagnostic/status LED display shows the indicated code.	BLANK	E	E	• Board mis-operation	INTERNAL FAULT	EE	• Compressor relay contacts welded.	• Replace control.	• Turn power OFF prior to repair • Replace with correct replacement part.
• Air conditioner/heat pump fails to operate. • Integrated control module diagnostic/status LED display shows the indicated code. • ComfortNet™ thermostat displays error message.	BLANK	b	0	• Circulator blower motor is not running when it should be running.	MOTOR NOT RUN	b0	• Indoor blower motor problem. • Communications error between indoor and outdoor unit.	• Check indoor blower motor. • Check indoor blower motor wiring. • Check indoor unit control. • Repair/ replace any faulty wiring. • Repair/ replace indoor blower motor or control.	• Turn power OFF prior to repair. • Applies only to fully communicating system using ComfortNet™ thermostat. • Replace with correct replacement part.
• Air conditioner/heat pump operates at reduced performance. • Air conditioner/heat pump operating at low stage when expected to operate at high stage. • Integrated control module diagnostic/status LED display shows the indicated code.	BLANK	b	9	• Airflow is lower than demanded	LOW ID AIRFLOW	b9	• Indoor blower motor problem • Blocked filters. • Restrictive/ undersized ductwork • Indoor/ outdoor unit miss-match.	• Check indoor blower motor. • Check filters; clean/replace as needed. • Check ductwork; resize as needed. • Verify indoor and outdoor units are properly matched.	• Turn power OFF prior to repair. • Applies only to fully communicating system using ComfortNet™ thermostat. • Replace with correct replacement part. See specification sheet(s) for airflow requirements and maximum external static pressure. • See specification sheets for approved system matches.

UNITARY DIAGNOSTIC CODES									
Symptoms of Abnormal Operation (Legacy & ComfortNet™ Thermostat)	Diagnostic/Status LED Display Codes			Fault Description	ComfortNet™ Thermostat Only		Possible Causes	Corrective Actions	Notes & Cautions
	Digit 3	Digit 2	Digit 1		Message	Code			
• Air conditioner/heat pump fails to operate. • Integrated control module diagnostic/status LED display shows the indicated code. • ComfortNet™ thermostat displays error message.	BLANK	d	0	• Data not yet on Network	NO NET DATA	d0	• Air conditioner/ heat pump is wired as part of a communicating system and integrated control module does not contain any shared data.	• Verify system type (communicating or legacy) • Populate shared data using memory card • Wire system as legacy system	• Turn power OFF prior to repair. • Use memory card for your specific model. • Insert memory card BEFORE turning power ON. Memory card may be removed after data is loaded. Turn power OFF before removing memory card. • Error code will be cleared once data is loaded. Applies only to fully communicating system using ComfortNet™ thermostat.
• Air conditioner/heat pump fails to operate. • Integrated control module diagnostic/status LED display shows the indicated code. • ComfortNet™ thermostat displays error message.	BLANK	d	1	• Invalid Data on Network	INVALID DATA	d1	• Air conditioner/ heat pump is wired as part of a communicating system and integrated control module contains invalid shared data or network data is invalid for the integrated control module.	• Verify system type (communicating or legacy). • Populate correct shared data using memory card. • Wire system as legacy system.	• Turn power OFF prior to repair. • Use memory card for your specific model. • Insert memory card BEFORE turning power ON. Memory card may be removed after data is loaded. Turn power OFF before removing memory card. • Error code will be cleared once data is loaded. Applies only to fully communicating system using ComfortNet™ thermostat.
• Air conditioner/heat pump fails to operate. • Air conditioner/heat pump operating at reduced performance. • Air conditioner/heat pump operating at low stage when expected to operate at high stage. • Integrated control module diagnostic/status LED display shows the indicated code. • ComfortNet™ thermostat displays error message.	BLANK	d	2	• System Mis-Match	INVALID SYSTEM	d2	• Air conditioner/ heat pump is wired as part of a communicating system and outdoor unit requires airflow greater than indoor unit's airflow capability. • Shared data is incompatible with the system or missing parameters.	• Verify system type (communicating or legacy). • Verify shared data is correct for your specific model; re-populate data if required. • Wire system as legacy system.	• Turn power OFF prior to repair. • Use memory card for your specific model. • Insert memory card BEFORE turning power ON. Memory card may be removed after data is loaded. Turn power OFF before removing memory card. • Error code will be cleared once data is loaded. Applies only to fully communicating system using ComfortNet™ thermostat.

UNITARY DIAGNOSTIC CODES									
Symptoms of Abnormal Operation (Legacy & ComfortNet™ Thermostat)	Diagnostic/Status LED Display Codes			Fault Description	ComfortNet™ Thermostat Only		Possible Causes	Corrective Actions	Notes & Cautions
	Digit 3	Digit 2	Digit 1		Message	Code			
• Air conditioner/heat pump fails to operate. • Integrated control module diagnostic/status LED display shows the indicated code. • ComfortNet™ thermostat displays error message.	BLANK	d	3	• Configuration Mis-match	INVALID CONFIG	d3	• Shared data sent to integrated control module does not match hardware configuration.	• Verify system type (communicating or legacy). • Verify shared data is correct for your specific model; re-populate data if required. • Wire system as legacy system.	• Turn power OFF prior to repair. • Use memory card for your specific model. • Insert memory card BEFORE turning power ON. Memory card may be removed after data is loaded. Turn power OFF before removing memory card. • Error code will be cleared once data is loaded. Applies only to fully communicating system using ComfortNet™ thermostat.
• Air conditioner/heat pump fails to operate. • Integrated control module diagnostic/status LED display shows the indicated code. • ComfortNet™ thermostat displays error message.	BLANK	d	4	• Invalid Memory Card Data	INVALID MC DATA	d4	• Shared data on memory card has been rejected.	• Verify system type (communicating or legacy). • Verify shared data is correct for your specific model; re-populate data if required. • Wire system as legacy system.	• Turn power OFF prior to repair. • Use memory card for your specific model. • Insert memory card BEFORE turning power ON. Memory card may be removed after data is loaded. Turn power OFF before removing memory card. • Error code will be cleared once data is loaded.
• Very long run time. • Four consecutive compressor protector trips with average run time between trips greater than 3 hours. • Compressor operating at high speed and outdoor fan operating at low speed • Integrated control module diagnostic/status LED display shows the indicated code.	BLANK	0	1	• Low Side Fault	LOW SIDE FAULT	01	• Low refrigerant charge. • Restriction in liquid line. • Indoor blower motor failure. • Indoor thermostat set extremely low.	• Verify refrigerant charge; adjust as needed. • Check for restricted liquid line; repair/ replace as needed. • Check indoor blower motor; repair/replace as needed. • Check indoor thermostat setting.	• Turn power OFF prior to repair. • Fault will clear after 30 consecutive normal cycles. • Fault may be cleared by cycling 24VAC to control. • Replace with correct replacement part(s).
• Compressor and outdoor fan are off. • Thermostat demand is present. • Integrated control module diagnostic/status LED display shows the indicated code.	BLANK	0	1	• Low Pressure Cut Out Trip	LPS OPEN	01	• Low refrigerant charge. • Restriction in liquid line. • Indoor blower motor failure. • Indoor thermostat set extremely low.	• Verify refrigerant charge; adjust as needed. • Check for restricted liquid line; repair/ replace as needed. • Check indoor blower motor; repair/replace as needed. • Check low pressure switch; repair/replace as needed. • Check indoor thermostat setting.	• Turn power OFF prior to repair. • Replace with correct replacement part(s).

UNITARY DIAGNOSTIC CODES									
Symptoms of Abnormal Operation (Legacy & ComfortNet™ Thermostat)	Diagnostic/Status LED Display Codes			Fault Description	ComfortNet™ Thermostat Only		Possible Causes	Corrective Actions	Notes & Cautions
	Digit 3	Digit 2	Digit 1		Message	Code			
• Compressor and outdoor fan are off . • Low pressure switch trip 3 times within same thermostat demand. • Thermostat demand is present. • Integrated control module diagnostic/status LED display shows the indicated code. • ComfortNet™ thermostat displays error message.	BLANK	L	1	• Low Pressure Cut Out Lockout (3 Trips)	LPS LOCKOUT	01	• Low refrigerant charge. • Restriction in liquid line. • Indoor blower motor failure. • Indoor thermostat set extremely low.	• Verify refrigerant charge; adjust as needed. • Check for restricted liquid line; repair/replace as needed. • Check indoor blower motor; repair/replace as needed. • Check low pressure switch; repair/replace as needed. • Check indoor thermostat setting.	• Turn power OFF prior to repair. • Must clear fault by cycling 24VAC to control. • Replace with correct replacement part(s).
• Four consecutive compressor protector trips with average run time between trips greater than 1 minute and less than 15 minutes. • Low pressure and high pressure switches are closed. • Integrated control module diagnostic/status LED display shows the indicated code.	BLANK	0	2	• High Side Fault	HIGH SIDE FAULT	02	• Blocked condenser coil. • Outdoor fan not running.	• Check and clean condenser coil. • Check outdoor fan motor; repair/ replace as needed. • Check outdoor fan motor wiring; repair/replace as needed. • Check outdoor fan motor capacitor; replace as needed.	• Turn power OFF prior to repair. • Fault will clear after 4 consecutive normal cycles. • Fault may be cleared by cycling 24VAC to control. • Replace with correct replacement part(s).
• Compressor and outdoor fan are off . • Thermostat demand is present. • Integrated control module diagnostic/status LED display shows the indicated code.	BLANK	0	2	• High Pressure Cut Out Trip	HPS OPEN	02	• Blocked condenser coil. • Outdoor fan not running.	• Check and clean condenser coil. • Check outdoor fan motor; repair/ replace as needed. • Check outdoor fan motor wiring; repair/replace as needed. • Check outdoor fan motor capacitor; replace as needed.	• Turn power OFF prior to repair. • Replace with correct replacement part(s).
• Compressor and outdoor fan are off . • Low pressure switch trip 3 times within same thermostat demand. • Thermostat demand is present. • Integrated control module diagnostic/status LED display shows the indicated code. • ComfortNet™ thermostat displays error message.	BLANK	L	2	• High Pressure Cut Out Lockout (3 Trips)	HPS LOCKOUT	02	• Blocked condenser coil. • Outdoor fan not running.	• Check and clean condenser coil. • Check outdoor fan motor; repair/ replace as needed. • Check outdoor fan motor wiring; repair/replace as needed. • Check outdoor fan motor capacitor; replace as needed.	• Turn power OFF prior to repair. • Must clear fault by cycling 24VAC to control. • Replace with correct replacement part(s).

UNITARY DIAGNOSTIC CODES									
Symptoms of Abnormal Operation (Legacy & ComfortNet™ Thermostat)	Diagnostic/Status LED Display Codes			Fault Description	ComfortNet™ Thermostat Only		Possible Causes	Corrective Actions	Notes & Cautions
	Digit 3	Digit 2	Digit 1		Message	Code			
• Run time for last 4 cycles is less than 3 minutes each. • Compressor protector has not tripped. • Low pressure and high pressure switches are closed. • Integrated control module diagnostic/status LED display shows the indicated code.	BLANK	0	3	• Short Cycling	CMPR SHRT CYCLE	03	• Intermittent thermostat demand. • Faulty compressor relay.	• Check thermostat and thermostat wiring; repair/ replace as needed. • Check compressor relay operation; replace control as needed.	• Turn power OFF prior to repair. • Fault will clear after 4 consecutive normal cycles. • Fault may be cleared by cycling 24VAC to control. • Replace with correct replacement part(s). • Minimum compressor runt time is changed from 30 seconds to 3 minutes.
• Compressor and outdoor fan are off . • Compressor protector trips four consecutive times. • Average run time between trips is less than 15 seconds. • Integrated control module diagnostic/status LED display shows the indicated code. • ComfortNet™ thermostat displays error message.	BLANK	0	4	• Locked Rotor	LOCKED ROTOR	04	• Compressor bearings are seized. • Failed compressor run capacitor. • Faulty run capacitor wiring. • Low line voltage.	• Check compressor operation; repair/ replace as needed. • Check run capacitor; replace as needed. • Check wiring; repair/replace as needed. • Verify line voltage is within range on rating plate; contact local utility is out of range.	• Turn power OFF prior to repair. • Must clear fault by cycling 24VAC to control. • Replace with correct replacement part(s).
• Compressor and outdoor fan are off f or greater than 4 hours. • Low pressure and high pressure switches are closed. • Integrated control module diagnostic/status LED display shows the indicated code. • ComfortNet™ thermostat displays error message.	BLANK	0	5	• Open Circuit	OPEN CIRCUIT	05	• Power is disconnected. • Failed compressor protector. • Compressor not properly wired to control.	• Check circuit breakers and fuses. • Check wiring to unit; repair/ replace as needed. • Check compressor; repair/replace as needed • Check compressor wiring; repair/ replace as needed.	• Turn power OFF prior to repair. • Fault will clear after 1 normal cycle. • Fault may be cleared by cycling 24VAC to control. • Replace with correct replacement part(s).
• Compressor and outdoor fan are off . • Low pressure and high pressure switches are closed. • Integrated control module diagnostic/status LED display shows the indicated code. • ComfortNet™ thermostat displays error message.	BLANK	0	6	• Open Start Circuit	OPEN START	06	• Compressor start winding is open. • Failed compressor run capacitor. • Faulty run capacitor wiring. • Compressor not properly wired to control. • Faulty compressor wiring.	• Check compressor; repair/replace as needed. • Check run capacitor; replace as needed. • Check wiring; repair/replace as needed.	• Turn power OFF prior to repair. • Fault will clear after 1 normal cycle. • Fault may be cleared by cycling 24VAC to control. • Replace will correct replacement part(s).

UNITARY DIAGNOSTIC CODES									
Symptoms of Abnormal Operation (Legacy & ComfortNet™ Thermostat)	Diagnostic/Status LED Display Codes			Fault Description	ComfortNet™ Thermostat Only		Possible Causes	Corrective Actions	Notes & Cautions
	Digit 3	Digit 2	Digit 1		Message	Code			
• Compressor and outdoor fan are off . • Low pressure and high pressure switches are closed. • Open start circuit has been detected 4 times with 5 minute delay between each detection. • Integrated control module diagnostic/status LED display shows the indicated code. • ComfortNet™ thermostat displays error message.	BLANK	L	6	• Open Start Circuit Lockout	OPEN START LOCK	06	• Compressor start winding is open. • Failed compressor run capacitor. • Faulty run capacitor wiring. • Compressor not properly wired to control. • Faulty compressor wiring.	• Check compressor; repair/replace as needed. • Check run capacitor; replace as needed. • Check wiring repair/replaced as needed.	• Turn power OFF prior to repair • Must clear fault by cycling 24VAC to control. • Replace with correct replacement part(s).
• Compressor and outdoor fan are off . • Low pressure and high pressure switches are closed. • Integrated control module diagnostic/status LED display shows the indicated code. • ComfortNet™ thermostat displays error message.	BLANK	0	7	• Open Run Circuit	OPEN RUN	07	• Compressor run winding is open. • Compressor not properly wired to control. • Faulty compressor wiring.	• Check compressor; repair/replace as needed. • Check wiring; repair/replace as needed.	• Turn power OFF prior to repair. • Fault will clear after 1 normal cycle. • Fault may be cycling 24VAC to control. • Replace with correct replacement part(s).
• Compressor and outdoor fan are off . • Low pressure and high pressure switches are closed. • Open run circuit has been detected 4 times with 5 minute delay between each detection. • Integrated control module diagnostic/status LED display shows the indicated code. • ComfortNet™ thermostat displays error message.	BLANK	L	7	• Open Run Circuit Lockout	OPEN RUN LOCK	07	• Compressor run winding is open. • Compressor not properly wired to control. • Faulty compressor wiring.	• Check compres-sor; repair/re-place as needed. • Check wiring; repair/replace as needed.	• Turn power OFF prior to repair. • Must clear fault by cy-cling 24VAC to control. • Replace with correct replacement part(s).
• Air conditioner/heat pump may appear to be operating normally. • Compressor protector may be open (compressor and outdoor fan off). • Integrated control module diagnostic/status LED display shows the indicated code.	BLANK	L	8	• Low Line Voltage	LOW LINE VOLT	08	• Low line voltage.	• Check circuit breakers and fuses. • Verify unit is connected to power supply as specified on rating plate. • Correct low line voltage condition; contact local utility if needed.	• Turn power OFF prior to repair. • Control detects line voltage less than 185 VAC. • Fault will clear if line voltage increases above 185 VAC.

UNITARY DIAGNOSTIC CODES									
Symptoms of Abnormal Operation (Legacy & ComfortNet™ Thermostat)	Diagnostic/Status LED Display Codes			Fault Description	ComfortNet™ Thermostat Only		Possible Causes	Corrective Actions	Notes & Cautions
	Digit 3	Digit 2	Digit 1		Message	Code			
• Air conditioner/heat pump may appear to be operating normally. • Compressor protector may be open (compressor and outdoor fan off). • Integrated control module diagnostic/status LED display shows the indicated code.	BLANK	H	8	• High Line Voltage	HIGH LINE VOLT	08	• High line voltage	• Correct high line voltage condition; contact local utility if needed. • Verify unit is connected to power supply as specified on rating plate.	• Turn power OFF prior to repair. • Control detects line voltage greater than 255 VAC. • Fault will clear if line voltage decreases below 255 VAC.
• Air conditioner/heat pump may appear to be operating normally. • Integrated control module diagnostic/status LED display shows the indicated code.	BLANK	0	9	• Low Pilot Voltage	LOW SECOND VOLT	09	• Control detects secondary voltage less than 18 VAC. • Transformer overloaded. • Low line voltage.	• Check fuse. • Correct low secondary voltage condition. • Check transformer; replace if needed.	• Turn power OFF prior to repair. • Fault will clear if secondary voltage rises above 21VAC. • Replace with correct replacement part(s).
• Compressor is off . • Integrated control module diagnostic/status LED display shows the indicated code.	BLANK	P	0	• Comp Protector Open	Not displayed	Not displayed	• No current through run or start windings. • Compressor run winding is open. • Compressor not properly wired to control. • Faulty compressor wiring. • Failed compressor run capacitor. • Faulty run capacitor wiring.	• Check compressor; repair/replace as needed. • Check wiring; repair/replace as needed. • Check run capacitor; replace as needed.	• Turn power OFF prior to repair. • Fault will clear after 1 normal cycle. • Fault may be cleared by cycling 24VAC to control. • Replace with correct replacement part(s).
• Air conditioner/heat pump may appear to be operating normally. • Compressor protector may be open (compressor and outdoor fan off). • Integrated control module diagnostic/status LED display shows the indicated code.	BLANK	0	8	• No Line Voltage	NO LINE VOLTAGE	08	• No Line Voltage	• Check circuit breaker and fuses. • Verify unit is connected to power supply as specified on rating plate.	• Turn power OFF prior to repair. • Control detects line voltage less than 185 VAC. • Fault will clear if line voltage increases above 185 VAC.

SYSTEM TROUBLESHOOTING

UNITARY DIAGNOSTIC CODES									
Symptoms of Abnormal Operation (Legacy & ComfortNet™ Thermostat)	Diagnostic/Status LED Display Codes			Fault Description	ComfortNet™ Thermostat Only		Possible Causes	Corrective Actions	Notes & Cautions
	Digit 3	Digit 2	Digit 1		Message	Code			
• Integrated control module diagnostic/status LED display shows the indicated code. • ComfortNet™ thermostat displays '---' in the temperature display area.	BLANK	A	2	• Outdoor air temp sensor fault	AIR SENSOR FLT	A2	• Shorted sensor. • Open sensor. • Sensor disconnected. • Sensor out of range.	• Check sensor connection. • Replace open/ shorted sensor.	• Turn power OFF prior to repair. • Replace with correct replacement part.
• Heat pump fails to operate in heating mode. • Integrated control module diagnostic/status LED display shows the indicated code. • ComfortNet™ thermostat displays error message.	BLANK	A	3	• Outdoor coil temp sensor fault	COIL SENSOR FLT	A3	• Shorted sensor • Open sensor. • Sensor. disconnected. • Sensor out of range.	• Check sensor connection. • Replace open/ shorted sensor.	• Turn power OFF prior to repair. • Replace with correct replacement part.
• Air conditioner/heat pump fails to operate. • Integrated control module diagnostic/status LED display shows the indicated code.	BLANK	E	5	• Open fuse	BLOWN FUSE	E5	• Short in low voltage wiring.	• Locate and correct short in low voltage wiring.	• Turn power OFF prior to repair. • Replace fuse with 3-amp automotive type.
• Air conditioner/heat pump fails to operate. • Integrated control module diagnostic/status LED display shows the indicated code.	BLANK	E	E	• Board mis-operation	INTERNAL FAULT	EE	• Compressor relay contacts welded.	• Replace control.	• Turn power OFF prior to repair • Replace with correct replacement part.
• Air conditioner/heat pump fails to operate. • Integrated control module diagnostic/status LED display shows the indicated code. • ComfortNet™ thermostat displays error message.	BLANK	b	0	• Circulator blower motor is not running when it should be running.	MOTOR NOT RUN	b0	• Indoor blower motor problem. • Communications error between indoor and outdoor unit.	• Check indoor blower motor. • Check indoor blower motor wiring. • Check indoor unit control. • Repair/ replace any faulty wiring. • Repair/ replace indoor blower motor or control.	• Turn power OFF prior to repair. • Applies only to fully communicating system using ComfortNet™ thermostat. • Replace with correct replacement part.
• Air conditioner/heat pump operates at reduced performance. • Air conditioner/heat pump operating at low stage when expected to operate at high stage. • Integrated control module diagnostic/status LED display shows the indicated code.	BLANK	b	9	• Airflow is lower than demanded	LOW ID AIRFLOW	b9	• Indoor blower motor problem • Blocked filters. • Restrictive/ undersized ductwork • Indoor/ outdoor unit miss-match.	• Check indoor blower motor. • Check filters; clean/replace as needed. • Check ductwork; resize as needed. • Verify indoor and outdoor units are properly matched.	• Turn power OFF prior to repair. • Applies only to fully communicating system using ComfortNet™ thermostat. • Replace with correct replacement part. See specification sheet(s) for airflow requirements and maximum external static pressure. • See specification sheets for approved system matches.

UNITARY DIAGNOSTIC CODES									
Symptoms of Abnormal Operation (Legacy & ComfortNet™ Thermostat)	Diagnostic/Status LED Display Codes			Fault Description	ComfortNet™ Thermostat Only		Possible Causes	Corrective Actions	Notes & Cautions
	Digit 3	Digit 2	Digit 1		Message	Code			
• Air conditioner/heat pump fails to operate. • Integrated control module diagnostic/status LED display shows the indicated code. • ComfortNet™ thermostat displays error message.	BLANK	d	0	• Data not yet on Network	NO NET DATA	d0	• Air conditioner/ heat pump is wired as part of a communicating system and integrated control module does not contain any shared data.	• Verify system type (communicating or legacy) • Populate shared data using memory card • Wire system as legacy system	• Turn power OFF prior to repair. • Use memory card for your specific model. • Insert memory card BEFORE turning power ON. Memory card may be removed after data is loaded. Turn power OFF before removing memory card. • Error code will be cleared once data is loaded. Applies only to fully communicating system using ComfortNet™ thermostat.
• Air conditioner/heat pump fails to operate. • Integrated control module diagnostic/status LED display shows the indicated code. • ComfortNet™ thermostat displays error message.	BLANK	d	1	• Invalid Data on Network	INVALID DATA	d1	• Air conditioner/ heat pump is wired as part of a communicating system and integrated control module contains invalid shared data or network data is invalid for the integrated control module.	• Verify system type (communicating or legacy). • Populate correct shared data using memory card. • Wire system as legacy system.	• Turn power OFF prior to repair. • Use memory card for your specific model. • Insert memory card BEFORE turning power ON. Memory card may be removed after data is loaded. Turn power OFF before removing memory card. • Error code will be cleared once data is loaded. Applies only to fully communicating system using ComfortNet™ thermostat.
• Air conditioner/heat pump fails to operate. • Air conditioner/heat pump operating at reduced performance. • Air conditioner/heat pump operating at low stage when expected to operate at high stage. • Integrated control module diagnostic/status LED display shows the indicated code. • ComfortNet™ thermostat displays error message.	BLANK	d	2	• System Mis-Match	INVALID SYSTEM	d2	• Air conditioner/ heat pump is wired as part of a communicating system and outdoor unit requires airflow greater than indoor unit's airflow capability. • Shared data is incompatible with the system or missing parameters.	• Verify system type (communicating or legacy). • Verify shared data is correct for your specific model; re-populate data if required. • Wire system as legacy system.	• Turn power OFF prior to repair. • Use memory card for your specific model. • Insert memory card BEFORE turning power ON. Memory card may be removed after data is loaded. Turn power OFF before removing memory card. • Error code will be cleared once data is loaded. Applies only to fully communicating system using ComfortNet™ thermostat.

UNITARY DIAGNOSTIC CODES									
Symptoms of Abnormal Operation (Legacy & ComfortNet™ Thermostat)	Diagnostic/Status LED Display Codes			Fault Description	ComfortNet™ Thermostat Only		Possible Causes	Corrective Actions	Notes & Cautions
	Digit 3	Digit 2	Digit 1		Message	Code			
• Air conditioner/heat pump fails to operate. • Integrated control module diagnostic/status LED display shows the indicated code. • ComfortNet™ thermostat displays error message.	BLANK	d	3	• Configuration Mis-match	INVALID CONFIG	d3	• Shared data sent to integrated control module does not match hardware configuration.	• Verify system type (communicating or legacy). • Verify shared data is correct for your specific model; re-populate data if required. • Wire system as legacy system.	• Turn power OFF prior to repair. • Use memory card for your specific model. • Insert memory card BEFORE turning power ON. Memory card may be removed after data is loaded. Turn power OFF before removing memory card. • Error code will be cleared once data is loaded. Applies only to fully communicating system using ComfortNet™ thermostat.
• Air conditioner/heat pump fails to operate. • Integrated control module diagnostic/status LED display shows the indicated code. • ComfortNet™ thermostat displays error message.	BLANK	d	4	• Invalid Memory Card Data	INVALID MC DATA	d4	• Shared data on memory card has been rejected.	• Verify system type (communicating or legacy). • Verify shared data is correct for your specific model; re-populate data if required. • Wire system as legacy system.	• Turn power OFF prior to repair. • Use memory card for your specific model. • Insert memory card BEFORE turning power ON. Memory card may be removed after data is loaded. Turn power OFF before removing memory card. • Error code will be cleared once data is loaded.
• Very long run time. • Four consecutive compressor protector trips with average run time between trips greater than 3 hours. • Compressor operating at high speed and outdoor fan operating at low speed • Integrated control module diagnostic/status LED display shows the indicated code.	BLANK	0	1	• Low Side Fault	LOW SIDE FAULT	01	• Low refrigerant charge. • Restriction in liquid line. • Indoor blower motor failure. • Indoor thermostat set extremely low.	• Verify refrigerant charge; adjust as needed. • Check for restricted liquid line; repair/ replace as needed. • Check indoor blower motor; repair/replace as needed. • Check indoor thermostat setting.	• Turn power OFF prior to repair. • Fault will clear after 30 consecutive normal cycles. • Fault may be cleared by cycling 24VAC to control. • Replace with correct replacement part(s).
• Compressor and outdoor fan are off. • Thermostat demand is present. • Integrated control module diagnostic/status LED display shows the indicated code.	BLANK	0	1	• Low Pressure Cut Out Trip	LPS OPEN	01	• Low refrigerant charge. • Restriction in liquid line. • Indoor blower motor failure. • Indoor thermostat set extremely low.	• Verify refrigerant charge; adjust as needed. • Check for restricted liquid line; repair/ replace as needed. • Check indoor blower motor; repair/replace as needed. • Check low pressure switch; repair/replace as needed. • Check indoor thermostat setting.	• Turn power OFF prior to repair. • Replace with correct replacement part(s).

UNITARY DIAGNOSTIC CODES									
Symptoms of Abnormal Operation (Legacy & ComfortNet™ Thermostat)	Diagnostic/Status LED Display Codes			Fault Description	ComfortNet™ Thermostat Only		Possible Causes	Corrective Actions	Notes & Cautions
	Digit 3	Digit 2	Digit 1		Message	Code			
• Compressor and outdoor fan are off . • Low pressure switch trip 3 times within same thermostat demand. • Thermostat demand is present. • Integrated control module diagnostic/status LED display shows the indicated code. • ComfortNet™ thermostat displays error message.	BLANK	L	1	• Low Pressure Cut Out Lockout (3 Trips)	LPS LOCKOUT	01	• Low refrigerant charge. • Restriction in liquid line. • Indoor blower motor failure. • Indoor thermostat set extremely low.	• Verify refrigerant charge; adjust as needed. • Check for restricted liquid line; repair/replace as needed. • Check indoor blower motor; repair/replace as needed. • Check low pressure switch; repair/replace as needed. • Check indoor thermostat setting.	• Turn power OFF prior to repair. • Must clear fault by cycling 24VAC to control. • Replace with correct replacement part(s).
• Four consecutive compressor protector trips with average run time between trips greater than 1 minute and less than 15 minutes. • Low pressure and high pressure switches are closed. • Integrated control module diagnostic/status LED display shows the indicated code.	BLANK	0	2	• High Side Fault	HIGH SIDE FAULT	02	• Blocked condenser coil. • Outdoor fan not running.	• Check and clean condenser coil. • Check outdoor fan motor; repair/ replace as needed. • Check outdoor fan motor wiring; repair/replace as needed. • Check outdoor fan motor capacitor; replace as needed.	• Turn power OFF prior to repair. • Fault will clear after 4 consecutive normal cycles. • Fault may be cleared by cycling 24VAC to control. • Replace with correct replacement part(s).
• Compressor and outdoor fan are off . • Thermostat demand is present. • Integrated control module diagnostic/status LED display shows the indicated code.	BLANK	0	2	• High Pressure Cut Out Trip	HPS OPEN	02	• Blocked condenser coil. • Outdoor fan not running.	• Check and clean condenser coil. • Check outdoor fan motor; repair/ replace as needed. • Check outdoor fan motor wiring; repair/replace as needed. • Check outdoor fan motor capacitor; replace as needed.	• Turn power OFF prior to repair. • Replace with correct replacement part(s).
• Compressor and outdoor fan are off . • Low pressure switch trip 3 times within same thermostat demand. • Thermostat demand is present. • Integrated control module diagnostic/status LED display shows the indicated code. • ComfortNet™ thermostat displays error message.	BLANK	L	2	• High Pressure Cut Out Lockout (3 Trips)	HPS LOCKOUT	02	• Blocked condenser coil. • Outdoor fan not running.	• Check and clean condenser coil. • Check outdoor fan motor; repair/ replace as needed. • Check outdoor fan motor wiring; repair/replace as needed. • Check outdoor fan motor capacitor; replace as needed.	• Turn power OFF prior to repair. • Must clear fault by cycling 24VAC to control. • Replace with correct replacement part(s).

UNITARY DIAGNOSTIC CODES									
Symptoms of Abnormal Operation (Legacy & ComfortNet™ Thermostat)	Diagnostic/Status LED Display Codes			Fault Description	ComfortNet™ Thermostat Only		Possible Causes	Corrective Actions	Notes & Cautions
	Digit 3	Digit 2	Digit 1		Message	Code			
• Run time for last 4 cycles is less than 3 minutes each. • Compressor protector has not tripped. • Low pressure and high pressure switches are closed. • Integrated control module diagnostic/status LED display shows the indicated code.	BLANK	0	3	• Short Cycling	CMPR SHRT CYCLE	03	• Intermittent thermostat demand. • Faulty compressor relay.	• Check thermostat and thermostat wiring; repair/ replace as needed. • Check compressor relay operation; replace control as needed.	• Turn power OFF prior to repair. • Fault will clear after 4 consecutive normal cycles. • Fault may be cleared by cycling 24VAC to control. • Replace with correct replacement part(s). • Minimum compressor runt time is changed from 30 seconds to 3 minutes.
• Compressor and outdoor fan are off . • Compressor protector trips four consecutive times. • Average run time between trips is less than 15 seconds. • Integrated control module diagnostic/status LED display shows the indicated code. • ComfortNet™ thermostat displays error message.	BLANK	0	4	• Locked Rotor	LOCKED ROTOR	04	• Compressor bearings are seized. • Failed compressor run capacitor. • Faulty run capacitor wiring. • Low line voltage.	• Check compressor operation; repair/ replace as needed. • Check run capacitor; replace as needed. • Check wiring; repair/replace as needed. • Verify line voltage is within range on rating plate; contact local utility is out of range.	• Turn power OFF prior to repair. • Must clear fault by cycling 24VAC to control. • Replace with correct replacement part(s).
• Compressor and outdoor fan are off f or greater than 4 hours. • Low pressure and high pressure switches are closed. • Integrated control module diagnostic/status LED display shows the indicated code. • ComfortNet™ thermostat displays error message.	BLANK	0	5	• Open Circuit	OPEN CIRCUIT	05	• Power is disconnected. • Failed compressor protector. • Compressor not properly wired to control.	• Check circuit breakers and fuses. • Check wiring to unit; repair/ replace as needed. • Check compressor; repair/replace as needed • Check compressor wiring; repair/ replace as needed.	• Turn power OFF prior to repair. • Fault will clear after 1 normal cycle. • Fault may be cleared by cycling 24VAC to control. • Replace with correct replacement part(s).
• Compressor and outdoor fan are off . • Low pressure and high pressure switches are closed. • Integrated control module diagnostic/status LED display shows the indicated code. • ComfortNet™ thermostat displays error message.	BLANK	0	6	• Open Start Circuit	OPEN START	06	• Compressor start winding is open. • Failed compressor run capacitor. • Faulty run capacitor wiring. • Compressor not properly wired to control. • Faulty compressor wiring.	• Check compressor; repair/replace as needed. • Check run capacitor; replace as needed. • Check wiring; repair/replace as needed.	• Turn power OFF prior to repair. • Fault will clear after 1 normal cycle. • Fault may be cleared by cycling 24VAC to control. • Replace will correct replacement part(s).

UNITARY DIAGNOSTIC CODES									
Symptoms of Abnormal Operation (Legacy & ComfortNet™ Thermostat)	Diagnostic/Status LED Display Codes			Fault Description	ComfortNet™ Thermostat Only		Possible Causes	Corrective Actions	Notes & Cautions
	Digit 3	Digit 2	Digit 1		Message	Code			
• Compressor and outdoor fan are off . • Low pressure and high pressure switches are closed. • Open start circuit has been detected 4 times with 5 minute delay between each detection. • Integrated control module diagnostic/status LED display shows the indicated code. • ComfortNet™ thermostat displays error message.	BLANK	L	6	• Open Start Circuit Lockout	OPEN START LOCK	06	• Compressor start winding is open. • Failed compressor run capacitor. • Faulty run capacitor wiring. • Compressor not properly wired to control. • Faulty compressor wiring.	• Check compressor; repair/replace as needed. • Check run capacitor; replace as needed. • Check wiring repair/replaced as needed.	• Turn power OFF prior to repair • Must clear fault by cycling 24VAC to control. • Replace with correct replacement part(s).
• Compressor and outdoor fan are off . • Low pressure and high pressure switches are closed. • Integrated control module diagnostic/status LED display shows the indicated code. • ComfortNet™ thermostat displays error message.	BLANK	0	7	• Open Run Circuit	OPEN RUN	07	• Compressor run winding is open. • Compressor not properly wired to control. • Faulty compressor wiring.	• Check compressor; repair/replace as needed. • Check wiring; repair/replace as needed.	• Turn power OFF prior to repair. • Fault will clear after 1 normal cycle. • Fault may be cycling 24VAC to control. • Replace with correct replacement part(s).
• Compressor and outdoor fan are off . • Low pressure and high pressure switches are closed. • Open run circuit has been detected 4 times with 5 minute delay between each detection. • Integrated control module diagnostic/status LED display shows the indicated code. • ComfortNet™ thermostat displays error message.	BLANK	L	7	• Open Run Circuit Lockout	OPEN RUN LOCK	07	• Compressor run winding is open. • Compressor not properly wired to control. • Faulty compressor wiring.	• Check compres-sor; repair/re-place as needed. • Check wiring; repair/replace as needed.	• Turn power OFF prior to repair. • Must clear fault by cy-cling 24VAC to control. • Replace with correct replacement part(s).
• Air conditioner/heat pump may appear to be operating normally. • Compressor protector may be open (compressor and outdoor fan off). • Integrated control module diagnostic/status LED display shows the indicated code.	BLANK	L	8	• Low Line Voltage	LOW LINE VOLT	08	• Low line voltage.	• Check circuit breakers and fuses. • Verify unit is connected to power supply as specified on rating plate. • Correct low line voltage condition; contact local utility if needed.	• Turn power OFF prior to repair. • Control detects line voltage less than 185 VAC. • Fault will clear if line voltage increases above 185 VAC.

UNITARY DIAGNOSTIC CODES									
Symptoms of Abnormal Operation (Legacy & ComfortNet™ Thermostat)	Diagnostic/Status LED Display Codes			Fault Description	ComfortNet™ Thermostat Only		Possible Causes	Corrective Actions	Notes & Cautions
	Digit 3	Digit 2	Digit 1		Message	Code			
• Air conditioner/heat pump may appear to be operating normally. • Compressor protector may be open (compressor and outdoor fan off). • Integrated control module diagnostic/status LED display shows the indicated code.	BLANK	H	8	• High Line Voltage	HIGH LINE VOLT	08	• High line voltage	• Correct high line voltage condition; contact local utility if needed. • Verify unit is connected to power supply as specified on rating plate.	• Turn power OFF prior to repair. • Control detects line voltage greater than 255 VAC. • Fault will clear if line voltage decreases below 255 VAC.
• Air conditioner/heat pump may appear to be operating normally. • Integrated control module diagnostic/status LED display shows the indicated code.	BLANK	0	9	• Low Pilot Voltage	LOW SECOND VOLT	09	• Control detects secondary voltage less than 18 VAC. • Transformer overloaded. • Low line voltage.	• Check fuse. • Correct low secondary voltage condition. • Check transformer; replace if needed.	• Turn power OFF prior to repair. • Fault will clear if secondary voltage rises above 21VAC. • Replace with correct replacement part(s).
• Compressor is off . • Integrated control module diagnostic/status LED display shows the indicated code.	BLANK	P	0	• Comp Protector Open	Not displayed	Not displayed	• No current through run or start windings. • Compressor run winding is open. • Compressor not properly wired to control. • Faulty compressor wiring. • Failed compressor run capacitor. • Faulty run capacitor wiring.	• Check compressor; repair/replace as needed. • Check wiring; repair/replace as needed. • Check run capacitor; replace as needed.	• Turn power OFF prior to repair. • Fault will clear after 1 normal cycle. • Fault may be cleared by cycling 24VAC to control. • Replace with correct replacement part(s).
• Air conditioner/heat pump may appear to be operating normally. • Compressor protector may be open (compressor and outdoor fan off). • Integrated control module diagnostic/status LED display shows the indicated code.	BLANK	0	8	• No Line Voltage	NO LINE VOLTAGE	08	• No Line Voltage	• Check circuit breaker and fuses. • Verify unit is connected to power supply as specified on rating plate.	• Turn power OFF prior to repair. • Control detects line voltage less than 185 VAC. • Fault will clear if line voltage increases above 185 VAC.

SERVICING

S-12 CHECKING HIGH PRESSURE CONTROL

WARNING

HIGH VOLTAGE!
Disconnect ALL power before servicing or installing. Multiple power sources may be present. Failure to do so may cause property damage, personal injury or death.

The high pressure control capillary senses the pressure in the compressor discharge line. If abnormally high condensing pressures develop, the contacts of the control open, breaking the control circuit before the compressor motor overloads. This control is automatically reset.

1. Using an ohmmeter, check across terminals of high pressure control, with wire removed. If not continuous, the contacts are open.
2. Attach a gauge to the dill valve port on the base valve.

With power ON:

WARNING

Line Voltage now present.

3. Start the system and place a piece of cardboard in front of the condenser coil, raising the condensing pressure.
4. Check pressure at which the high pressure control cuts-out. If it cuts-out at 610 PSIG ± 10 PSIG, it is operating normally (See causes for high head pressure in Service Problem Analysis Guide). If it cuts out below this pressure range, replace the control.

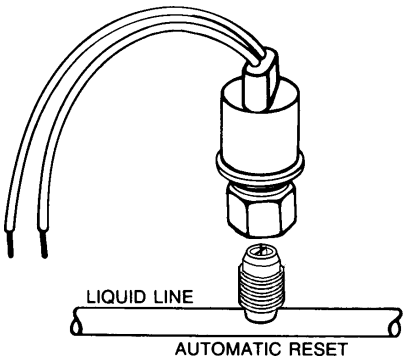

S-13 CHECKING LOW PRESSURE CONTROL

The low pressure control senses the pressure in the suction line and will open its contacts on a drop in pressure. The low pressure control will automatically reset itself with a rise in pressure.

The low pressure control is designed to cut-out (open) at approximately 21 PSIG for heat pumps and 55 PSIG for air conditioners. It will automatically cut-in (close) at approximately 50 PSIG for heat pumps and 95 PSIG for air conditioners.

Test for continuity using a VOM and if not as above, replace the control.

S-14 CHECKING HIGH AND LOW PRESSURE SWITCH VOLTAGE

The HPC and LPC are wired in series so output at both switches should be the same when switches are closed voltage reading should be 6.5vdc or 8.0vac. **NOTE:** the Discharge Thermostat is wired in series with the HPC if DT is open you will read input voltage on the HPC and no voltage on the output of HPC or LPC.

S-15 CHECKING CAPACITOR

CAPACITOR, RUN

A run capacitor is wired across the auxiliary and main windings of a single phase permanent split capacitor motor. The capacitors primary function is to reduce the line current while greatly improving the torque characteristics of a motor. This is accomplished by using the 90° phase relationship between the capacitor current and voltage in conjunction with the motor windings, so that the motor will give two phase operation when connected to a single phase circuit. The capacitor also reduces the line current to the motor by improving the power factor.

The line side of this capacitor is marked with "COM" and is wired to the line side of the circuit.

S-15A RESISTANCE CHECK USING A DIGITAL MULTI-METER

WARNING

HIGH VOLTAGE!
Disconnect ALL power before servicing or installing. Multiple power sources may be present. Failure to do so may cause property damage, personal injury or death.

Check for Digital Test

1. Set the meter on Ohm range (Set it at lease 1000 Ohm =1k).

WARNING

Discharge capacitor through a 20 to 30 OHM resistor before handling.

2. Connect the Meter leads to the Capacitor terminals.
3. Digital meter will show a reading momentarily (Figure 1). Note the reading.

Figure 1 Figure 2

4. Reading will immediately return to the OL = (Open Line) (Figure 2). Every attempt of Step 2 will show the same result as was in step 4 and Step 5. This indicates that the capacitor is good.
5. If there is no Change, then capacitor is dead and must be replaced.

Check for Analog Meter

A. Good Condition - indicator swings to zero and slowly returns to infinity. (Start capacitor with bleed resistor will not return to infinity. It will still read the resistance of the resistor).

B. Shorted - indicator swings to zero and stops there - replace.

C. Open - no reading - replace. (Start capacitor would read resistor resistance.)

S-15B CAPACITANCE CHECK USING A DIGITAL MULTI-METER (IN CAPACITANCE MODE)

WARNING

Discharge capacitor through a 20 to 30 OHM resistor before handling.

NOTE: You can do this test with a multi-meter if you have a Capacitance meter on your multi-meter.

1. Remove the capacitor from the circuit.
2. Now Select "Capacitance" on your multi-meter.
3. Now connect the capacitor terminals to the multi-meter leads.
4. If the reading is near to the actual value of the capacitor (i.e. the printed value on the capacitor). The capacitor is good. (Note that the reading may be less than the actual printed value of the capacitor).
5. If you read a significantly lower capacitance or none at all, then capacitor is dead and must be replaced.

S-16G CHECKING EMERSON ULTRATECH™ ECM MOTORS

DESCRIPTION

The AVPTC and MBVC models utilize an Emerson, 4-wire variable speed ECM blower motor. The ECM blower motor provides constant CFM.

The motor is a serially communicating variable speed motor. Only four wires are required to control the motor: +Vdc, Common, Receive, and Transmit.

The +Vdc and Common wires provide power to the motor's low voltage control circuits.

GENERAL CHECKS/CONSIDERATIONS

1. Check power supply to the air handler or modular blower. Ensure power supply is within the range specified on rating plate. See section S-1.
2. Check motor power harness. Ensure wires are continuous and make good contact when seated in the connectors. Repair or replace as needed.
3. Check motor control harness. Ensure wires are continuous and make good contact when seated in the connectors. Repair or replace as needed.
4. Check thermostat and thermostat wiring. Ensure thermostat is providing proper cooling/heating/continuous fan demands. Repair or replace as needed.
5. Check blower wheel. Confirm wheel is properly seated on motor shaft. Set screw must be on shaft flat and torqued to 165 in-lbs minimum. Confirm wheel has no broken or loose blades. Repair or replace as needed.
6. Ensure motor and wheel turn freely. Check for interference between wheel and housing or wheel and motor. Repair or replace as needed.
7. Check housing for cracks and/or corrosion. Repair or replace as needed.
8. Check motor mounting bracket. Ensure mouting bracket is tightly secured to the housing. Ensure bracket is not cracked or broken.

SERVICING

Emerson UltraCheck-EZ™ Diagnostic Tool

The Emerson UltraCheck-EZ™ diaganostic tool may be used to diagnose the ECM motor.

WARNING

HIGH VOLTAGE!
Disconnect ALL power before servicing or installing. Multiple power sources may be present. Failure to do so may cause property damage, personal injury or death.

To use the diagnostic tool, perform the following steps:

1. Disconnect power to the air handler.
2. Disconnect the 4-circuit control harness from the motor.
3. Plug the 4-circuit connector from the diagnostic tool into the motor control connector.
4. Connect one alligator clip from the diagnostic tool to a ground source.
5. Connect the other alligator clip to a 24VAC source.

NOTE: The alligator clips are NOT polarized.

NOTE: The UltraCheck-EZ™ diagnostic tool is equipped with a nonreplaceable fuse. Connecting the tool to a source other than 24VAC could damage the tool and cause the fuse to open. Doing so will render the diagnostic tool inoperable.

6. Turn on power to air handler or modular blower.

WARNING

Line Voltage now present.

7. Depress the orange power button on the diagnostic tool to send a run signal to the motor. Allow up to 5 seconds for the motor to start.

NOTE: If the orange power button does not illuminate when depressed, the tool either has an open fuse or is not properly connected to a 24VAC source.

8. The green LED on the diagnostic tool will blink indicating communications between the tool and motor. See table below for indications of tool indicators and motor actions. Replace or repair as needed.

Power Button	Green LED	Motor Action	Indication(s)
OFF	OFF	Not Rotating	Confirm 24VAC to UltraCheck-EZ™ tool. If 24VAC is confirmed, diagnostic tool is inoperable.
ON	Blinking	Rotating	Motor and control/end bell are functioning properly.
ON	OFF	Rotating	Replace motor control/end bell.
ON	Blinking	Not Rotating	Check motor (see *Motor Checks* below).
ON	OFF	Not Rotating	Replace motor control/end bell; verify motor (see *Motor Checks* below).

9. Depress the orange power button to turn off motor.
10. Disconnect power. Disconnect diagnostic tool.
11. Reconnect the 4-wire harness from control board to motor.

Electrical Checks - High Voltage Power Circuits

WARNING

HIGH VOLTAGE!
Disconnect ALL power before servicing or installing. Multiple power sources may be present. Failure to do so may cause property damage, personal injury or death.

1. Disconnect power to air handler or modular blower.
2. Disconnect the 5-circuit power connector to the ECM motor.
3. Turn on power to air handler or modular.

WARNING

Line Voltage now present.

4. Measure voltage between pins 4 and 5 on the 5-circuit connector. Measured voltage should be the same as the supply voltage to the air handler or modular.

SERVICING

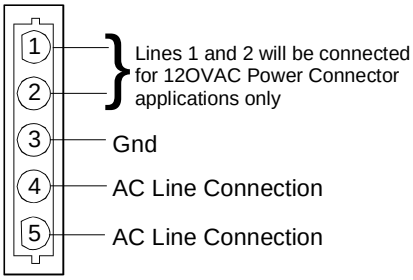

5. Measure voltage between pins 4 and 3. Voltage should be approximately half of the voltage measured in step 4.
6. Measure voltage between pins 5 and 3. Voltage should be approximately half of the voltage measured in step 4.
7. If no voltage is present, check supply voltage to air handler or modular blower. See section S-1.
8. Disconnect power to air handler or modular blower. Reconnect the 5-circuit power harness disconnected in step 2.

Electrical Checks - Low Voltage Control Circuits

1. Turn on power to air handler or modular.

WARNING

Line Voltage now present.

2. Check voltage between pins on the 4-wire motor control harness between themotor and control board.
3. Voltage on pins should read:

   Pins 1 to 4 = 3.3vdc

   Pins 1 to 2 = 3.3vdc

   Pins 3 to 4 = 15vdc

Motor Control/End Bell Checks

WARNING

HIGH VOLTAGE!
Disconnect ALL power before servicing or installing. Multiple power sources may be present. Failure to do so may cause property damage, personal injury or death.

1. Disconnect power to air handler or modular blower.

NOTE: Motor contains capacitors that can hold a charge for several minutes after disconnecting power. Wait 5 minutes after removing power to allow capacitors to discharge.

2. Disconnect the motor control harness and motor power harness.
3. Remove the blower assembly from the air handler or modular blower.
4. Remove the (3) screws securing the control/end bell to the motor. Separate the control/end bell. Disconnect the 3-circuit harness from the control/end bell to remove the control/end bell from the motor.
5. Inspect the NTC thermistor inside the control/end bell (see figure below). Replace control/end bell if thermistor is cracked or broken.

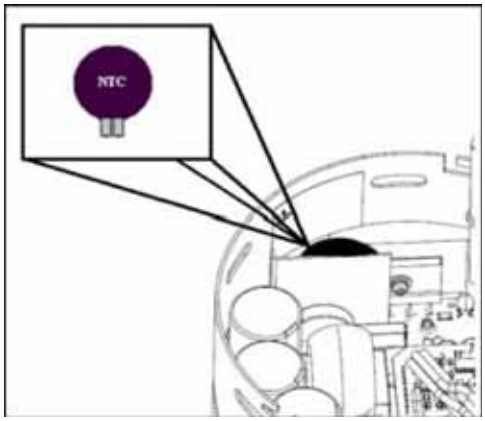

6. Inspect the large capacitors inside the control/end bell (see figure below). Replace the control/end bell if any of the capacitors are bulging or swollen.

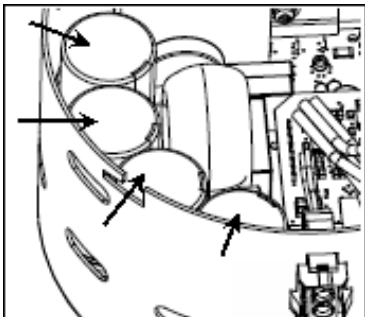

7. Locate the 3-circuit connector in the control/end bell. Using an ohmmeter, check the resistance between each terminal in the connector. If the resistance is 100 Ω or greater, the control/end bell is functioning properly. Replace the control/end bell if the resistance is lower than 100 Ω.
8. Reassemble motor and control/end bell in reverse of disassembly. Replace blower assembly into air handler or modular blower.

SERVICING

Motor Checks

WARNING

HIGH VOLTAGE!
Disconnect ALL power before servicing or installing. Multiple power sources may be present. Failure to do so may cause property damage, personal injury or death.

1. Disconnect power to air handler or modular blower.

NOTE: Motor contains capacitors that can hold a charge for several minutes after disconnecting power. Wait 5 minutes after removing power to allow capacitors to discharge.

2. Disassemble motor as described in steps 2 through 4 above.
3. Locate the 3-circuit harness from the motor. Using an ohmmeter, measure the resistance between each motor phase winding. The resistance levels should be equal. Replace the motor if the resistance levels are unequal, open circuited or short circuited.
4. Measure the resistance between each motor phase winding and the motor shell. Replace the motor if any phase winding is short circuited to the motor shell.
5. Reassemble motor and control/end bell in reverse of disassembly. Replace blower assembly into air handler or modular blower.

S-16H ECM CFM ADJUSTMENTS AVPTC/MBVC

This section references the operation characteristics of the AVPTC/MBVC models. The MBVC models utilize an integrated air handler control. The air handler control provides ECM blower motor control and includes all dipswitches necessary to set up the cooling, heat pump and electric airflow characteristics.

The control has three banks of dipswitches: a bank for cooling airflow and trim adjustment, a bank for selecting one of (4) enhancement profiles and enabling dehumidification, and a bank for selecting the installed electric heater kit size. Adjustments are made by selecting the appropriate ON/OFF combinations of the dipswitches. The dipswitches along with their functions are shown in the figures below.

Cooling Airflow Dipswitches - Used to set the desired cooling airflow

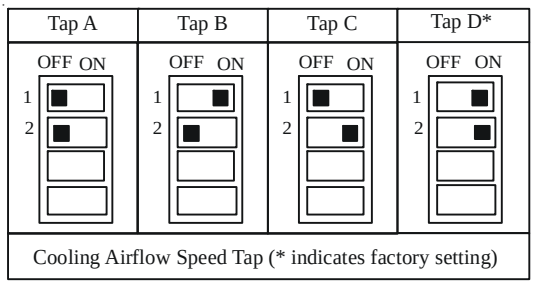

Cooling Airflow Speed Tap (* indicates factory setting)

Airflow Adjust Dipswitches - Used to adjust the airflow +/- 10%

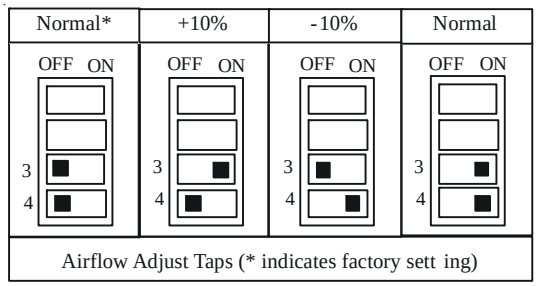

Airflow Adjust Taps (* indicates factory sett ing)

Ramping Profile Dipswitches - Used to select a comfort profile for the cooling mode.

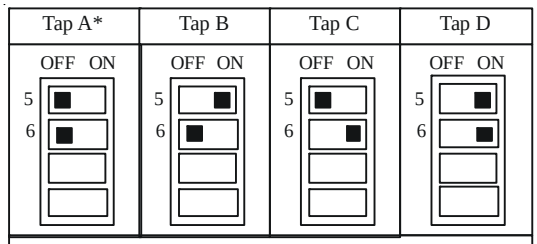

Cooling Airflow Ramping Profiles (* indicates factory setting)

Dehumidification Disable/Enable Dipswitch - Reduces cooling airflow by ~ 15% when enabled AND when used with a humidistat (such as DEHUM1). Airflow is reduced when a call for cooling is present and the humidistat is open.

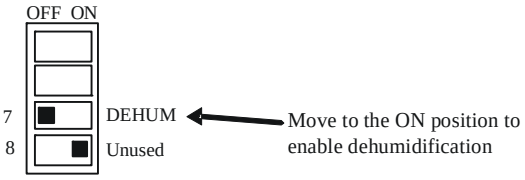

Electric Heater Airflow - Airflow for installed electric heaters is set by adjusting the dipswitches to the appropriate heater size.

21 kW*	20 kW	15 kW	10 kW
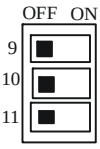			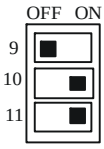
Electric Heating Airflow (* indicates factory setting)			

8 kW	6 kW	5 kW	3 kW
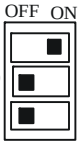	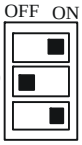		
Electric Heating Airflow (* indicates factory setting)			

The table on the following page indicates the airflow that corresponds to the available dipswitch settings.

MBVC Airflow Table

Speed Selection Dip Switches								
	Cool Selection Switches		Adjust Selection Switches		Profile Selection Switches			
TAP	1	2	3	4	5	6		
A	OFF	OFF	OFF	OFF	OFF	OFF		
B	ON	OFF	ON	OFF	ON	OFF		
C	OFF	ON	OFF	ON	OFF	ON		
D	ON	ON	ON	ON	ON	ON		

Profiles	Pre-Run	Short-Run	OFF Delay
A	-------	--------	60 sec/100%
B	-------	30 sec/50%	60 sec/100%
C	-------	7.5 min/82%	60 sec/100%
D	30 sec/50%	7.5 min/82%	30 sec/50%

To set airflow: (1) Select model and desired high stage cooling airflow. Determine the cooresponding tap (A, B, C, or D). Set dip switches 1 and 2 to the appropriate ON / OFF positions. (2) Select model and installed electric heater size. Set switches 9, 10, and 11 to the appropriate ON/OFF positions. (3) Select the airflow adjustment factor tap A and D are 0%; Tap B is +10%; Tap C -10%. Set dip switches 3 and 4 to the appropriate ON / OFF positions.

To set Comfort Mode: Select desired Comfort Mode profile (see profiles above). Set switches 5 and 6 to the approriate ON / OFF positions.

0140A00045

Htr Kw	9	10	11	MBVC1200*	MBVC16000*	MBVC2000*
3	ON	ON	ON	600	800	800
5	ON	ON	OFF	600	800	800
6	ON	OFF	ON	635	800	800
8	ON	OFF	OFF	740	1000	1000
10	OFF	ON	ON	1000	1000	1200
15	OFF	ON	OFF	1400	1500	1500
20	OFF	OFF	ON	NR	NR	2000

Model	Tap	Low Stage Cool	High Stage Cool
MBVC1200 *	A	400	600
	B	540	800
	C	670	1000
	D	800	1200
MBVC1600 *	A	670	1000
	B	800	1200
	C	940	1400
	D	1070	1600
MBVC2000 *	A	800	1200
	B	1070	1600
	C	1200	1800
	D	1340	2000

BLOWER PERFORMANCE DATA

HTR kW	MBVC1200*	MBVC1600*	MBVC2000*	SWITCH 9	SWITCH 10	SWITCH 11
3	600	800	800	ON	ON	ON
5	600	800	800	ON	ON	OFF
6	635	800	800	ON	OFF	ON
8	740	1000	1000	ON	OFF	OFF
10	1000	1000	1200	OFF	ON	ON
15	1400	1500	1500	OFF	ON	OFF
20	NR	NR	2000	OFF	OFF	ON
21	NR	NR	NR	ON^	ON^	ON^

^ Factory setting

MODEL	LOW STAGE COOL	HIGH STAGE COOL	COOL SELECTION SWITCHES		ADJUST SELECTION SWITCHES		PROFILE SELECTION SWITCHES	
			1	2	3	4	5	6
MBVC1200	400	600	OFF	OFF	OFF	OFF	OFF	OFF
	540	800	ON	OFF	ON	OFF	ON	OFF
	670	1000	OFF	ON	OFF	ON	OFF	ON
	800	1200	ON	ON	ON	ON	ON	ON
MBVC1600	670	1000	OFF	OFF	OFF	OFF	OFF	OFF
	800	1200	ON	OFF	ON	OFF	ON	OFF
	940	1400	OFF	ON	OFF	ON	OFF	ON
	1070	1600	ON	ON	ON	ON	ON	ON
MBVC2000	800	1200	OFF	OFF	OFF	OFF	OFF	OFF
	1070	1600	ON	OFF	ON	OFF	ON	OFF
	1200	1800	OFF	ON	OFF	ON	OFF	ON
	1340	2000	ON	ON	ON	ON	ON	ON

^ Factory setting

Locate the blower speed selection DIP switches on the integrated control module. Select the desired “cooling” speed tap by positioning switches 1 and 2 appropriately. Select the desired "adjust" tap by positioning switches 3 and 4 appropriatly. Refer to the following *Dipswitches - Cooling Airflow and Airflow Adjust Taps* figure for switch positions and their corresponding taps. Verify CFM by counting the number of times the green CFM LED blinks.

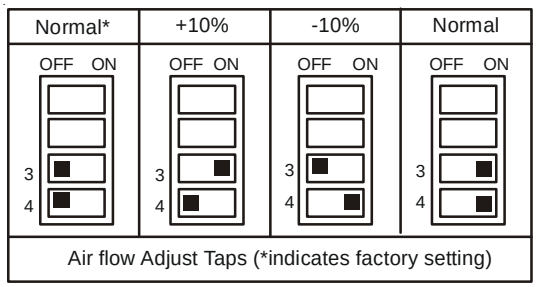

Dip Switches - Cooling Airflow and Airflow Adjust Taps

Thermostat "Fan Only" Mode

During"Fan Only" operations, the CFM output is 30% of the maximum CFM capability.

CFM Trim Adjust

Minor adjustments can be made through the dipswitch combination of 3-4.

AVPTC Airflow Table

Speed Selection Dip Switches

Cool Selection Switches		
Tap	1	2
A	OFF	OFF
B	ON	OFF
C	OFF	ON
D	ON	ON

Adjust Selection Switches		
TRIM	3	4
0%	OFF	OFF
+ 10%	ON	OFF
- 10%	OFF	ON
0%	ON	ON

TO SET AIRFLOW:

1. Select appropriate model from Cooling/Heat Pump Airflow Table. Based on desired Airflow for your application select corresponding tap (A,B,C or D). Set dip switches 1 & 2 to the appropriate ON/OFF positions.
2. Select appropriate Airflow adjustment factor for application (0%. +10%, -10%). Set dip switches 3 & 4 to the appropriate ON/OFF positions.
3. *If installed with Heater Kit:*
   Using Electric Heat Airflow Table, set dip switches 9, 10 and 11 to the appropriate ON/OFF positions based on Heater kit installed.
   If installed without Heater Kit:
   Ensure dip switches 9, 10 and 11 are set to a valid heater kit selection. Example: The only valid heater kits for AVPTC183014* applications are 3, 5, 6, 8 and 10 kW.
   Failure to do so will result in a Heater Kit error code.

TO SET COMFORT MODE:

Select desired Comfort Mode profile (see profiles above). Set switches 5 and 6 to the appropriate ON/OFF positions.

				Profile Selection Switches	
Profiles	Pre-Run	Short-Run	Off Delay	5	6
A	-------	-------	60 sec/100%	OFF	OFF
B	-------	30 sec/50%	60 sec/100%	ON	OFF
C	-------	7.5 mins/82%	60 sec/100%	OFF	ON
D	30 sec/50%	7.5 mins/82%	30 sec/50%	ON	ON

Cooling/Heat Pump Airflow Table

Model	Tap	Low Stage Cool	High Stage Cool
AVPTC183014*	A	420	630
	B	560	840
	C	700	1040
AVPTC313714*	A	410	610
	B	560	830
	C	700	1040
	D	830	1240
AVPTC426014*	A	810	1210
	B	940	1410
	C	1050	1560
	D	1210	1800

NOTE: Airflow data shown applies to non-communicating mode operation only. For a fully communicating system, please see the outdoor unit's installation instructions for cooling and heat pump airflow data. *See ComfortNet™ System - Airflow Consideration section for details.*

Electric Heat Airflow Table

Htr kW	9	10	11	AVPTC 183014*	AVPTC 313714*	AVPTC 426014*
3	ON	ON	ON	630	610	600
5	ON	ON	OFF	730	710	680
6	ON	OFF	ON	840	840	790
8	ON	OFF	OFF	1080	1060	990
10	OFF	ON	ON	1270	1260	1190
15	OFF	ON	OFF	NR	1470	1390
20	OFF	OFF	ON	NR	NR	1580
21	OFF	OFF	OFF	NR	NR	1580

NOTE: Airflow data shown applies to the emergency heat mode (electric heat only) in either non-communicating mode operation or fully communicating mode operation.

NOTE: When 8kW and 10kW heat kits are used with an AVPTC1830 and AVPTC313, matched with 2-ton outdoor unit, see Note 1below.

1 Set Heater Kit dip switches 9, 10 and 11 to 6kW setting (9-ON, 10-OFF, 11-ON) to obtain 840 CFM.

SERVICING

Speed Selection Dip Switches

	Cool Selection Switches		Adjust Selection Switches		Profile Selection Switches		Continuous Fan Speed	
TAP	S1	S2	S3	S4	S5	S6	S12	S13
A	OFF	OFF	OFF	OFF	OFF	OFF	OFF	OFF
B	ON	OFF	ON	OFF	ON	OFF	ON	OFF
C	OFF	ON	OFF	ON	OFF	ON	OFF	ON
D	ON	ON	ON	ON	ON	ON	ON	ON

Profiles	Pre-Run	Short-Run	OFF Delay
A	**-------**	**--------**	**60 sec/100%**
B	**-------**	**30 sec/50%**	**60 sec/100%**
C	**-------**	**7.5 min/82%**	**60 sec/100%**
D	**30 sec/50%**	**7.5 min/82%**	**30 sec/50%**

To set Airflow: (1) Select model and desired High Stage Cooling Airflow. Determine the corresponding tap (A, B, C, D). Set dip switches S1 and S2 to the appropriate ON / OFF positions.
(2) Select model and installed electric heater size. Set dip switches S9, S10, and S11 to the appropriate ON / OFF positions.
(3) If airflow adjustment is required set Trim Enable Switch **S8** to ON (OFF = 0% Trim) and set S3 and S4 to appropriate ON / OFF positions. Tap A is +5%,Tap B is -5%, Tap C is +10%, Tap D is -10%.

To Set Comfort mode: Select desired Comfort Mode Profile (see profiles above). Set dip switches S5 and S6 to appropriate ON / OFF positions.

Dehumidification: To enable, set dip switch S7 to ON. Cooling airflow will be reduced to 85% of nominal value during cool call when Dehum command is present. To disable, set S7 to OFF.

Continuous Fan Speed: Use dip switches S12 and S13 to select one of 4 continuous fan speeds, Tap A is 25%. Tap B is 50%, Tap C is 75%, Tap D is 100%.

Notes:

1. Airflow data shown applies to legacy mode operation only. For a fully communicating system, please see the outdoor unit's installation instructions for cooling and heat pump airflow data. See *ComfortNet System-Airflow Consideration section for details.*
2. Airflow blink codes are approximations of actual airflow.

Cooling/Heat Pump Airflow Table

Model	Speed tap	Low stage (CFM)	High stage (CFM)
AVPTC24B14**	**A**	410	610
	B	565	835
	C	660	970
	D	765	1125
AVPTC30C14**	**A**	440	610
	B	605	835
	C	740	1020
	D	885	1225
AVPTC36C14**	**A**	500	725
	B	700	1000
	C	930	1330
	D	1120	1600
AVPTC48C14**	**A**	500	725
	B	700	1000
	C	930	1330
	D	1120	1600
AVPTC42D14**	**A**	560	800
	B	763	1090
	C	994	1420
	D	1225	1750
AVPTC48D14**	**A**	900	1350
	B	1035	1550
	C	1140	1700
	D	1200	1800
AVPTC60D14**	**A**	1210	1610
	B	1365	1815
	C	1450	1920
	D	1525	2025

NOTE: *Airflow blink codes are approximations of actual airflow. Airflows provided are at 0.3 static.*

SERVICING

READY 15 AVPTC AIRFLOW TABLES

Speed Selection Dip Switches

	Cool Selection Switches		Adjust Selection Switches		Profile Selection Switches		Continuous Fan Speed	
TAP	S1	S2	S3	S4	S5	S6	S12	S13
A	OFF	OFF	OFF	OFF	OFF	OFF	OFF	OFF
B	ON	OFF	ON	OFF	ON	OFF	ON	OFF
C	OFF	ON	OFF	ON	OFF	ON	OFF	ON
D	ON	ON	ON	ON	ON	ON	ON	ON

Profiles	Pre-Run	Short-Run	OFF Delay
A	**-------**	**--------**	**60 sec/100%**
B	**-------**	**30 sec/50%**	**60 sec/100%**
C	**-------**	**7.5 min/82%**	**60 sec/100%**
D	**30 sec/50%**	**7.5 min/82%**	**30 sec/50%**

To set Airflow: (1) Select model and desired High Stage Cooling Airflow. Determine the corresponding tap (A, B, C, D). Set dip switches S1 and S2 to the appropriate ON / OFF positions.
(2) Select model and installed electric heater size. Set dip switches S9, S10, and S11 to the appropriate ON / OFF positions.
(3) If airflow adjustment is required set Trim Enable Switch **S8** to ON (OFF = 0% Trim) and set S3 and S4 to appropriate ON / OFF positions. Tap A is +5%,Tap B is -5%, Tap C is +10%, Tap D is -10%.

To Set Comfort mode: Select desired Comfort Mode Profile (see profiles above). Set dip switches S5 and S6 to appropriate ON / OFF positions.

Dehumidification: To enable, set dip switch S7 to ON. Cooling airflow will be reduced to 85% of nominal value during cool call when Dehum command is present. To disable, set S7 to OFF.

Continuous Fan Speed: Use dip switches S12 and S13 to select one of 4 continuous fan speeds, Tap A is 25%. Tap B is 50%, Tap C is 75%, Tap D is 100%.

Notes:
1. Airflow data shown applies to legacy mode operation only. For a fully communicating system, please see the outdoor unit's installation instructions for cooling and heat pump airflow data. See *ComfortNet System-Airflow Consideration section for details*.
2. Airflow blink codes are approximations of actual airflow.

Cooling/Heat Pump Airflow Table

MODEL	Tap	Low Stage	High Stage
AVPTC25B14	A	445	650
	B	600	855
	C	690	980
	D	745	1085
AVPTC29B14 AVPTC37B14	A	375	610
	B	545	795
	C	630	930
	D	740	1085
AVPTC31C14 AVPTC37C14	A	590	880
	B	705	1055
	C	845	1265
	D	910	1360
AVPTC33C14	A	450	675
	B	520	780
	C	660	985
	D	750	1115
AVPTC39C14	A	665	990
	B	770	1150
	C	815	1215
	D	910	1360
AVPTC49C14	A	710	1060
	B	745	1115
	C	880	1315
	D	975	1455
AVPTC59C14	A	610	875
	B	810	1225
	C	940	1410
	D	1070	1595
AVPTC37D14	A	605	900
	B	725	1080
	C	820	1225
	D	940	1405
AVPTC59D14	A	1040	1445
	B	1260	1790
	C	1330	1890
	D	1395	1990
AVPTC49D14	A	820	1195
	B	895	1320
	C	995	1460
	D	1056	1530
AVPTC61D14	A	1080	1630
	B	1210	1820
	C	1280	1925
	D	1350	2025

SERVICING

ELECTRIC HEAT AIRFLOW TABLE										
Htr kW	**9**	**10**	**11**	**AVPTC24B14A***	**AVPTC30C14A***	**AVPTC36C14A***	**AVPTC48C14***	**AVPTC42D14A*+**	**AVPTC48D14A*++**	**AVPTC60D14A*+++**
3	ON	ON	ON	550	600	NR	NR	850**	NR	NR
5	ON	ON	OFF	650	700	850	850	1250	1250	1250
6	ON	OFF	ON	700	750	900	900	1300	1300	1300
8	ON	OFF	OFF	800	875	1000	1000	1500	1500	1500
10	OFF	ON	ON	850	950	1200	1200	1550	1550	1550
15	OFF	ON	OFF	NR	NR	1440	1440	1720	1720	1780
19*	OFF	OFF	ON	NR	NR	1500	1500	NR	NR	NR
20				NR	NR	1500	1500	1800	1815	1850
21 or 25*	OFF	OFF	OFF	NR	NR	NR	NR	NR	1850	1850

NOTE: Airflow data shown applies to the electric heat only in either legacy mode or communicating mode operation.
* Within thermostat user menu, CTK0* communicating thermostat will display 20 kW for OFF-OFF-ON dip switch selection and 21 kW for OFF- OFF-OFF dip switch selection.
NR- Not rated

+For match up with a 2 ton outdoor unit: Heater kit application shall not exceed 10 kW.

Airflow for 5 kW up to 10 kW heater kits shall be set to 850 cfm speed tap of ON-ON-ON.

++For match up with a 3 ton outdoor unit: Heater kit application shall not exceed 15 kW.

Airflow for 5 kW up to 15 kW heater kits shall be set to 1300 cfm speed tap of ON-OFF-ON.

+++For match up with a 3.5 ton outdoor unit: Heater kit application shall not exceed 20 kW.

Airflow for 5 kW up to 20 kW heater kits shall be set to 1500 cfm speed tap of ON-OFF-OFF

** 3 kW heater kit is not applicable for this indoor application.

DIP SWITCH SETTING & AIRFLOW TABLE FOR ELECTRIC HEAT

HTR KW	S9	S10	S11	AVPTC25B14	AVPTC29B14	AVPTC33C14	AVPTC37B14	AVPTC31C14 AVPTC37C14	AVPTC39C14	AVPTC49C14	AVPTC59C14	AVPTC37D14	AVPTC59D14	AVPTC49D14 ††	AVPTC61D14 †††
3	ON	ON	ON	550	550	600	550								
5	ON	ON	OFF	650	650	700	650	850	850	1170	1170	1240	1240	1250	1250
6	ON	OFF	ON	700	700	750	700	900	900	1170	1170	1240	1240	1300	1300
8	ON	OFF	OFF	800	800	875	800	1000	1000	1170	1170	1240	1240	1500	1500
10	OFF	ON	ON	850	875	950	875	1170	1170	1170	1170	1240	1240	1550	1550
15	OFF	ON	OFF	875	875	950	1050	1345	1345	1345	1345	1520	1520	1720	1780
19*	OFF	OFF	ON					1345	1345	1345	1345				
20	OFF	OFF	ON									1520	1520		1850
21	OFF	OFF	OFF												
25*	OFF	OFF	OFF												1850

Note: Airflow data shown applies to the electric heat only in either legacy mode or communicating mode operation
* Within thermostat user menu CTK0* communicating thermostat will display 20KW for OFF- OFF- ON dip switch selection, 21kW for OFF-OFF-OFF dip swith selection.

NR - Not Rated
†† For match up with a 3 ton outdoor unit:
Airflow for 5 kW up to 15 kW heater kits shall be set to 1300 cfm speed tap of ON-OFF-ON.

††† For match up with a 3.5 ton outdoor unit: Heater kit application shall not exceed 20 kW.
Airflow for 5 kW up to 20 kW heater kits shall be set to 1500 cfm speed tap of ON-OFF-OFF.

SERVICING

S-17 CHECKING COMPRESSOR

WARNING

Hermetic compressor electrical terminal venting can be dangerous. When insulating material which supports a hermetic compressor or electrical terminal suddenly disintegrates due to physical abuse or as a result of an electrical short between the terminal and the compressor housing, the terminal may be expelled, venting the vapor and liquid contents of the compressor housing and system.

If the compressor terminal PROTECTIVE COVER and gasket (if required) are not properly in place and secured, there is a remote possibility if a terminal vents, that the vaporous and liquid discharge can be ignited, spouting flames several feet, causing potentially severe or fatal injury to anyone in its path.

This discharge can be ignited external to the compressor if the terminal cover is not properly in place and if the discharge impinges on a sufficient heat source.

Ignition of the discharge can also occur at the venting terminal or inside the compressor, if there is sufficient contaminant air present in the system and an electrical arc occurs as the terminal vents.

Ignition cannot occur at the venting terminal without the presence of contaminant air, and cannot occur externally from the venting terminal without the presence of an external ignition source.

Therefore, proper evacuation of a hermetic system is essential at the time of manufacture and during servicing.

To reduce the possibility of external ignition, all open flame, electrical power, and other heat sources should be extinguished or turned off prior to servicing a system.

If the following test indicates shorted, grounded or open windings, see procedures S-19 for the next steps to be taken.

S-17A RESISTANCE TEST

Each compressor is equipped with an internal overload.

The line break internal overload senses both motor amperage and winding temperature. High motor temperature or amperage heats the disc causing it to open, breaking the common circuit within the compressor on single phase units.

Heat generated within the compressor shell, usually due to recycling of the motor, high amperage or insufficient gas to cool the motor, is slow to dissipate. Allow at least three to four hours for it to cool and reset, then retest.

Fuse, circuit breaker, ground fault protective device, etc. has not tripped -

WARNING

HIGH VOLTAGE!
Disconnect ALL power before servicing or installing. Multiple power sources may be present. Failure to do so may cause property damage, personal injury or death.

1. Remove the leads from the compressor terminals.

WARNING

See warnings S-17 before removing compressor terminal cover.

2. Using an ohmmeter, test continuity between terminals S-R, C-R, and C-S, on single phase units.

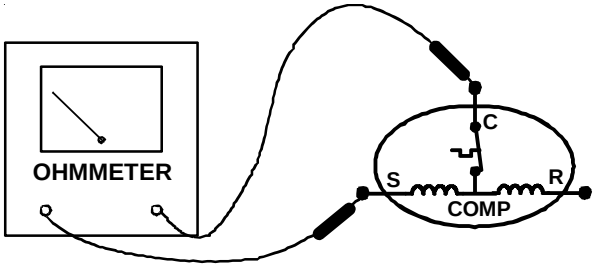

TESTING COMPRESSOR WINDINGS

If either winding does not test continuous, replace the compressor.

NOTE: If an open compressor is indicated, allow ample time for the internal overload to reset before replacing compressor.

S-17B GROUND TEST

If fuse, circuit breaker, ground fault protective device, etc., has tripped, this is a strong indication that an electrical problem exists and must be found and corrected. The circuit protective device rating must be checked, and its maximum rating should coincide with that marked on the equipment nameplate.

With the terminal protective cover in place, it is acceptable to replace the fuse or reset the circuit breaker ONE TIME ONLY to see if it was just a nuisance opening. If it opens again, DO NOT continue to reset.

A Meghometer should not be used to determine good or bad compressors. There is not an industry recognized specification for mega ohm values for small tonnage compressors. Scroll compressors can have the motor winding end-turns in the oil, which can produce a lower resistance reading to ground. The insulation type is the same for scroll and reciprocating compressors.

Disconnect all power to unit, making sure that **all** power legs are open.

SERVICING

1. DO NOT remove protective terminal cover. Disconnect the three leads going to the compressor terminals at the nearest point to the compressor.
2. Identify the leads and using an ohmmeter on the R x 10,000 scale or the highest resistance scale on your ohmmeter check the resistance between each of the three leads separately to ground (such as an unpainted tube on the compressor).
3. If a ground is indicated, then carefully remove the compressor terminal protective cover and inspect for loose leads or insulation breaks in the lead wires.
4. If no visual problems indicated, carefully remove the leads at the compressor terminals.
5. Carefully retest for ground, directly between compressor terminals and ground.
6. If ground is indicated, replace the compressor. The resistance reading should be infinity. If there is any reading on meter, there is some continuity to ground and compressor should be considered defective.

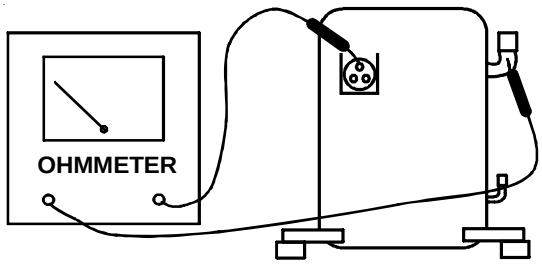

WARNING

Damage can occur to the glass embedded terminals if the leads are not properly removed. This can result in terminal and hot oil discharging.

S-17C UNLOADER TEST PROCEDURE

Unloader Test Procedure with Comfort Alert™-Unitary (UC) Control Diagnostics

If you suspected that the unloader is not working, the following methods may be used to verify operation.

1. Operate the system and measure compressor amperage. Cycle the unloader on and off at ten second intervals by appling and removing Y2 voltage to the module. Wait five seconds after power is applied to Y2 before taking a reading. An increase in compressor amperage should be observed when switching from part-load to full-load and a reduction in compressor amperage should be observed when changing from full-load to part-load. The percent change in current depends on the operating conditions and voltage.
2. If Step 1 does not give the expected results remove the solenoid plug from the compressor and with the unit running and the thermostat calling for Y2 to be energized test the voltage output at the plug with a dc voltmeter. The reading should be 4 to 18 VDC for Comfort Alert. If not, unplug the harness from the module and check voltage at the "High" pins of the module. The module will not power the unloader solenoid if the compressor is not running.
3. If the correct DC voltage is at the control circuit molded plug measure the unloader coil resistance. Shut off power and remove the control circuit molded plug from the compressor and measure te unloader solenoid coil resistance. If the coil resistance is infinite, zero, or grounded, the compressor must be replaced.

SERVICING

S-17D OPERATION TEST

If the voltage, capacitor, overload and motor winding test fail to show the cause for failure:

WARNING

HIGH VOLTAGE!
Disconnect ALL power before servicing or installing. Multiple power sources may be present. Failure to do so may cause property damage, personal injury or death.

1. Remove unit wiring from disconnect switch and wire a test cord to the disconnect switch.

NOTE: The wire size of the test cord must equal the line wire size and the fuse must be of the proper size and type.

2. With the protective terminal cover in place, use the three leads to the compressor terminals that were disconnected at the nearest point to the compressor and connect the common, start and run clips to the respective leads.
3. Connect good capacitors of the right MFD and voltage rating into the circuit as shown.
4. With power ON, close the switch.

WARNING

Line Voltage now present.

A. If the compressor starts and continues to run, the cause for failure is somewhere else in the system.

B. If the compressor fails to start - replace.

COPELAND COMPRESSOR

03	A	12345	L
YEAR	MONTH	SERIAL NUMBER	PLANT

S-18 TESTING CRANKCASE HEATER (OPTIONAL ITEM)

The crankcase heater must be energized a minimum of four (4) hours before the condensing unit is operated.

Crankcase heaters are used to prevent migration or accumulation of refrigerant in the compressor crankcase during the off cycles and prevents liquid slugging or oil pumping on start up.

A crankcase heater will not prevent compressor damage due to a floodback or over charge condition.

WARNING

Disconnect ALL power before servicing.

1. Disconnect the heater lead in wires.
2. Using an ohmmeter, check heater continuity - should test continuous. If not, replace.

NOTE: The positive temperature coefficient crankcase heater is a 40 watt 265 voltage heater. The cool resistance of the heater will be approximately 1800 ohms. The resistance will become greater as the temperature of the compressor shell increases.

S-21 CHECKING REVERSING VALVE AND SOLENOID

Occasionally the reversing valve may stick in the heating or cooling position or in the mid-position.

When stuck in the mid-position, part of the discharge gas from the compressor is directed back to the suction side, resulting in excessively high suction pressure. An increase in the suction line temperature through the reversing valve can also be measured. Check operation of the valve by starting the system and switching the operation from COOLING to HEATING cycle.

If the valve fails to change its position, test the voltage (24V) at the valve coil terminals, while the system is on the COOLING cycle.

All heat pumps and ComfortNet™ heat pumps wired in legacy - If no voltage is registered at the coil terminals, check the operation of the thermostat and the continuity of the connecting wiring from the "O" terminal of the thermostat to the unit.

ComfortNet heat pumps only - Check voltage (24VAC) at the non-insulated terminal E22 on the UC control board (RVS on silkscreen) and "C" terminal on the 7-pin or 4-pin connector on the UC control

If voltage is registered at the coil, tap the valve body lightly while switching the system from HEATING to COOLING, etc. If this fails to cause the valve to switch positions, remove the coil connector cap and test the continuity of the reversing valve solenoid coil. If the coil does not test continuous - replace it.

If the coil test continuous and 24 volts is present at the coil terminals, the valve is inoperative - replace it.

S-24 TESTING DEFROST CONTROL

LEGACY MODELS:

COMFORTNET™ UNITS:

To check the defrost control for proper sequencing, proceed as follows: With power ON; unit not running.

1. Set thermostat to call for heating.
2. Press **TEST** and **RECALL** buttons simultaneously for

approximately 3 seconds, then release them. System should go into defrost immediately.

3. Using VOM check for voltage across terminals "C & O". Meter should read 24 volts (skip this step if system a fully communicating system)
4. Visually inspect to see that the frost is gradually melting on the coil and the compressor is running.
5. Using VOM check for voltage across "W2 & C" terminals on the board. You should read 24 volts.
6. If not as above, replace control board.
7. Set thermostat to off position and disconnect power before removing any jumpers or wires.

S-26 TESTING TEMPERATURE SENSORS (COMFORTNET READY MODELS ONLY)

The ASXC and DSXC ComfortNet ready air conditioner models are factory equipped with an outdoor air temperature (OAT) sensor. The OAT sensor allows the outdoor air temperature to be displayed on the CTK0* thermostat when used with the ASXC and DSXC models.

The ASZC and DSZC ComfortNet ready heat pump models are equipped with both an outdoor air temperature (OAT) sensor and an outdoor coil temperature (OCT) sensor. The OAT provides the balance point temperature in heat pump systems (air handler w/electric heat + heat pump) and dual fuel systems. The OCT sensor is provides the outdoor coil temperature and is used in determining defrost cycles.

To check either the outdoor air or outdoor coil temperature sensors:

WARNING

HIGH VOLTAGE!
Disconnect ALL power before servicing or installing. Multiple power sources may be present. Failure to do so may cause property damage, personal injury or death.

1. Disconnect power to the air conditioner or heat pump.
2. Disconnect the sensor from the unitary (UC) control.
3. Connect an ohmmeter across the sensor terminals. The ohmmeter should read be 10kΩ, +/-10%, at 75°F. Replace the sensor if the sensor is open, shorted, or outside the valid resistance range.

Ohm Reading of Communicating Outdoor Unit Sensors									
T, °F	RW@T	T, °F	RW@T	T, °F	RW@T	T, °F	RW@T	T, °F	RW@T
-40	336,000	5	72,940	50	19,903	95	6,530	140	2,488
-31	242,700	14	55,319	59	15,714	104	5,327	149	2,083
-22	177,000	23	42,324	68	12,493	113	4,370	158	1,752
-13	130,400	32	32,654	77	10,000	122	3,603	167	1,480
-4	97,060	41	25,396	86	8,056	134	2,986	176	1,255

S-40A AVPTC/MBVC ELECTRONIC BLOWER/ HEATER CONTROL

Description

The AVPTC and MBVC models utilize an electronic control that provides ECM blower motor control and control of up to two electric heat sequencers. The control has thermostat inputs for up to two stages of cooling, two stages of electric heat, reversing valve, and dehumidification. Control input is 24VAC.

All dipswitches necessary to setup cooling, heat pump, and electric heat airflow are fully integrated into the control. Dehumidification is enabled/disabled via an on-board dipswitch.

Features

The new air handler control includes advanced diagnostic features with fault recall, estimated CFM display via on-board LED, and ComfortNet™ ready. Diagnostics includes heater kit selection diagnostics, open fuse, internal control fault, data errors, and blower motor faults. Data errors are not included in the fault recall list. Diagnostic error codes are displayed on a single red LED.

The estimated CFM is displayed as a flashing green LED. The LED flashes once for each 100 CFM.

The AVPTC/MBVC air handlers may be used in a fully communicating ComfortNet system when matched with a compatiable outdoor unit and the CTK0* thermostat. A fully communicating system offers advanced setup and diagnostic features.

Basic Operation

The air handler control receives thermostat inputs either from a standard 24VAC thermostat or the CTK0* ComfortNet thermostat. For cooling and heat pump operation, the control operates the variable speed blower motor at the demand as determined from the thermostat input(s). If a demand for electric heat is received, the control will provide a 24VAC output for up to two electric heat sequencers.

SERVICING

Troubleshooting

Motor Control Circuits

WARNING

HIGH VOLTAGE!
Disconnect ALL power before servicing or installing. Multiple power sources may be present. Failure to do so may cause property damage, personal injury or death.

1. Turn on power to air handler or modular.

WARNING

Line Voltage now present.

2. Check voltage between pins 1 and 4 at the 4-wire motor connector on the control board. *See Electrical Checks - Low Voltage Control Circuits section (S-16H).*

Electric Heat Sequencer Outputs

WARNING

HIGH VOLTAGE!
Disconnect ALL power before servicing or installing. Multiple power sources may be present. Failure to do so may cause property damage, personal injury or death.

1. Turn on power to air handler or modular blower.

WARNING

Line Voltage now present.

2. Disconnect the 4-circuit harness connecting the control to the electric heater kit.
3. Provide a thermostat demand for low stage auxiliary heat (W1). Measure the voltage between circuits 1 and 3 at the on-board electric heat connector. Voltage should measure 24VAC. Replace control if no voltage is present.

NOTE: Allow for any built-in time delays before making voltage measurements. Any electric heater faults that are present may prevent the heater output from energizing. Verify that no heater faults are present before making voltage measurements.

4. Provide a thermostat demand for high stage auxiliary heat (W1 + W2). Measure the voltage between circuits 1 and 3 at the on-board electric heat connector. Measure the voltage between circuits 2 and 3 at the on-board electric heat connector. Voltage should measure 24VAC. Replace control if no voltage is present.

*Communications (Applies only to Systems with Compatible ComfortNet™ Outdoor Unit and CTK0*Thermostat)*

The integrated air handler control has some on-board tools that may be used to troubleshoot the network. These tools are: red communications LED, green receive (Rx) LED, and learn button. These are described below

a. Red communications LED – Indicates the status of the network. Refer to the Network Troubleshooting Chart for the LED status and the corresponding potential problem.

b. Green receive LED – Indicates network traffic. Refer to the Network Troubleshooting Chart for the LED status and the corresponding potential problem.

c. Learn button – Used to reset the network. Depress the button for approximately 2 seconds to reset the network.

Voltages between the two data lines and between each data line and common may be used to determine if the network is operating properly.

Do the following to measure the voltages on the communications data lines.

WARNING

Line Voltage now present.

Data Line Voltage Troubleshooting and Bias Switches

Proper data voltage is essential to robust and reliable communication on the ComfortNet™ system. Any wiring issues must be corrected for good communication.

- Poor wiring connections at the terminal blocks
- Low voltage wires that are shorted, grounded or broken.
- Communicating wires that are not connected to the proper terminals at the connector.
- 24 volt common outside and inside are not at the same ground potential
- Bias dip switch setting conflicts between indoor board and outdoor board.
- It is **STRONGLY** recommended that you do not connect multiple wires into a single terminal on the wiring connector
- Wire nuts are recommended to connect multiple wires to connector ensuring one wire is used for each terminal.
- Failure to do so may result in intermittent operation.
- Typical 18 AWG thermostat wire may be used to wire the system components. One hundred feet is the maximum length of wire between indoor and outdoor units or between indoor unit and thermostat.
- When outdoor transformer is used and there at least three thermostat wires running to the outdoor unit use one of the extra wires to connect the two 24 volt commons together. This will ensure both 24 volt commons are at the same ground potential.

SERVICING

- When outdoor transformer is used and there are only two thermostat wires running to the outdoor unit ground the 24 volt common "C" of the outdoor transformer to a chassis ground (earth0 ground. This is not as good as the third wire but it is better than leaving the outdoor 24 volt common floating.

If this does not resolve communication issues Bias switch issues will need to be checked**.**

Note: Only one unit should control bias on the system.

- Air Handler or Furnace should never have their bias switches moved.
- Indoor bias switches are always in the **"ON"** position
- A/C and Heat Pump bias switches can be moved.
- Thermostats do not have bias switches.
- It may be necessary to move bias switches on the outdoor unit to achieve proper bias. If the switches need to be moved both switches must be moved.

Checking Bias Voltage:

Remove communicating wires from outdoor board and thermostat and check voltage at the indoor board.

1. DC voltage from C to data 1 should read approximately 1.9vdc or 2.8vdc for some furnaces. (Figure 1)
2. DC voltage from C to data 2 should read approximately 1.3vdc. or 2.2vdc for some furnaces . (Figure 2)
3. Difference in voltage should be .6vdc.

Figure 1

Figure 2

Reconnect communicating wires from outdoor board check voltage again

1. Check voltage from C to data 1 and C to Data 2 if the voltage is different than the original reading listed above. The outdoor bias switches must be turned to off.
2. Turn power off at outdoor unit and unplug the low voltage connector.
3. Remove the plastic film covering the switches with screwdriver or knife.
4. Turn both switches to "off" position.
5. Plug in connector and turn on power and check DC voltage between C and data 1 and C and data 2.

Difference should be .6vdc.

SEQUENCE OF OPERATION

AVPTC/MBVC with ASXC/DSXC Condenser and CTK0* Communicating Themostat

The AVPTC or MBVC air handle/modular blower matched with an ASXC or DSXC condensing unit and CTK0* communicating thermostat constitute a network. The three components, or subsystems, making up the system communicate with one another with information passed between all three components. This leads to a somewhat non-traditional manner in which the system components receive commands for system operation. All system commands are routed from the component through the network to the appropriate destination component.

NOTE: The individual subsystems will cease operation if the request for operation is NOT refreshed after 5 minutes. This is a built-in safe guard to prevent the possibility of runaway operation.

1.0 Cooling Operation - Low and High Stage Cool

1.1 The CTK0* thermostat sends a request for low stage cooling through the network to the unitary (UC) control in the condenser. The UC control receives the command and processes any compressor and fan delays.

1.2 The UC control sends a request for low stage fan speed

to the air handler/modular blower. The blower energizes the ECM blower motor at the appropriate speed.

1.3 The condenser energizes the compressor and condenser fan motor at the appropriate low stage speeds.

1.4 The system operates at low stage cooling.

1.5 If the thermostat demand cannot be met on low stage cooling, the CTK0* thermostat sends a request for high stage cooling to the condenser. The condenser in turn sends a request for high stage fan speed to the air handler/modular blower. The blower increases the blower speed to the high stage cooling speed.

1.6 The condenser's unitary control energizes the high stage compressor solenoid and switches the condenser fan motor to high speed.

1.7 The system operates at high stage cooling.

1.8 Once the thermostat demand is satisfied, the CTK0* thermostat commands the UC control to end cooling operation. The condenser de-energizes the compressorand condenser fan motor. The UC control continues providing a fan request until any cooling blower OFF delays have expired.

2.0 Heating Operation - Auxiliary/Emergency Heat

2.1 The CTK0* thermostat sends a request for emergency heat to the air handler/modular blower.

2.2 The air handler control energizes the ECM blower motor at the emergency heat speed. The electric heat sequencer outputs are also energized, thus energizing the electric heaters.

2.3 The system operates at emergency heat.

2.4 Once the thermostat demand is satisfied, the CTK0* thermostat commands the air handler/modular blower to end emergency heat operation. The air handler control de-energizes the electric heat sequencer outputs. The ECM blower motor remains energized until any blower OFF delay timing has expired.

3.0 Continuous Fan Operation

3.1 With a demand for continuous fan operation, the CTK0* thermostat sends a fan request to the integrated air handler control along with a fan demand. The control energizes the variavble speed ECM motor at fan demand provided by the thermostat. The fan demand provided by the thermostat will be 30%, 50%,or 70% of the air handler's maximum airflow capability. The continuous fan demand is set from the thermostat as low, medium, or high.

3.2 If the thermostat demand for continuous fan is removed, the CTK0* thermostat commands the integrated air handler control to end continuous fan operation. The integrated AH control immediately de-energizes the ECM blower motor.

AVPTC/MBVC with ASZC/DSZC Heat Pump and CTK0* Communicating Themostat

The AVPTC or MBVC air handle/modular blower matched with an ASZC or DSZC condensing unit and CTK0* communicating thermostat constitute a network. The three components, or subsystems, making up the system communicate with one another with information passed between all three components. This leads to a somewhat non-traditional manner in which the system components receive commands for system operation. All system commands are routed from the component through the network to the appropriate destination component.

NOTE: Communicating heat pump systems are designed to utilize a balance point temperature. The balance point temperature in part controls heat pump operation. If the outdoor temperature is below the balance point, the heat pump is disable and only electric heat is available for heating. The balance point temperature is set via the CTK0* thermostat in the advanced installer's configuration menu.

The CTK0* thermostat also allows the user to disable the electric heaters in the air handler/modular blower depending on the outdoor temperature. The electric heaters are disabled If the outdoor temperature is above the set point. All heating is supplied by the heat pump.

The outdoor air temperature is aquired from the outdoor air temperature (OAT) sensor included with the ASZC/DSZC heat pump models. Faults with the sensor will affect heating operation.

NOTE: The individual subsystems will cease operation if the request for operation is NOT refreshed after 5 minutes. This is a built-in safe guard to prevent the possibility of runaway operation.

1.0 Cooling Operation - Low and High Stage Cool

1.1 The CTK0* thermostat sends a request for low stage cooling through the network to the unitary (UC) control in the heat pump. The UC control receives the command and processes any compressor and fan delays.

1.2 The UC control sends a request for low stage fan speed to the air handler/modular blower. The blower energizes the ECM blower motor at the appropriate speed.

1.3 The heat pump energizes the compressor and condenser fan motor at the appropriate low stage speeds. The reversing valve is also energized.

1.4 The system operates at low stage cooling.

1.5 If the thermostat demand cannot be met on low stage cooling, the CTK0* thermostat sends a request for high stage cooling to the heat pump. The heat pump in turn sends a request for high stage fan speed to the air handler/modular blower. The AH control increases the blower speed to the high stage cooling speed.

1.6 The heat pump's unitary control energizes the high stage compressor solenoid and switches the condenser fan motor to high speed. The reversing valve remains energized.

1.7 The system operates at high stage cooling.

1.8 Once the thermostat demand is satisfied, the CTK0* thermostat commands the UC control to end cooling operation. The heat pump de-energizes the compressor, condenser fan motor, and reversing valve. The UC control

continues providing a fan request until any cooling blower OFF delays have expired.

2.0 Heating Operation

Outdoor Temperature Above the Heat Pump Balance Point

2.1 The CTK0* thermostat sends a request for the outdoor air temperature to the heat pump. The heat pump returns an outdoor air temperature that is above the balance point temperature. Heat pump heating is enabled.

2.2 The CTK0* thermostat sends a request for low stage heat pump heating to the unitary (UC) control in the heat pump. The UC control receives the command and processes any compressor and fan delays.

2.3 The UC control sends a request for low stage fan speed to the air handler/modular blower. The blower energizes the ECM blower motor at the appropriate speed.

2.4 The condenser energizes the compressor and condenser fan motor at the appropriate low stage speeds.

2.5 The system operates at low stage heat pump heating.

2.6 If the thermostat demand cannot be met on low stage heat pump heating, the CTK0* thermostat sends a request for high stage heat pump heating to the heat pump. The heat pump in turn sends a request for high stage fan speed to the air handler/modular blower. The AH control increases the blower speed to the high stage heat pump heating speed.

2.7 The heat pump's unitary control energizes the high stage compressor solenoid and switches the condenser fan motor to high speed.

2.8 The system operates at high stage heat pump heating.

2.9 If the thermostat demand cannot be met on high stage heat pump heating, the CTK0* thermostat sends a request for auxiliary heat to the air handler/modular blower.

2.10 Upon receiving a demand for auxiliary heat, the air handler control determines the appropriate airflow for high stage heat pump + auxiliary heat operation and operates the ECM blower motor at that airflow demand. The air handler control determines which airflow demand is greatest and applies that demand when operating the ECM blower motor.

2.11 The system operates at high stage heat pump heating plus auxiliary heat.

2.12 Once the thermostat demand is satisfied, the CTK0* thermostat commands the heat pump to end heat pump heating operation. The compressor and outdoor fan motor are de-energized.

The air handler/modular blower is commanded to end auxiliary heat operation. The air handler control de-energizes the electric heat sequencer outputs. The ECM blower motor remains energized until any blower OFF delay timing has expired.

Outdoor Temperature Below the Heat Pump Balance Point

2.1 The CTK0*** thermostat sends a request for the outdoor air temperature to the heat pump. The heat pump returns an outdoor air temperature that is below the balance point temperature. Heat pump heating is disabled.

2.2 The CTK0*** thermostat sends a request for auxiliary heat to the air handler/modular blower.

2.2 The air handler control energizes the ECM blower motor at the auxiliary heat speed. The electric heat sequencer outputs are also energized, thus energizing the electric heaters.

2.3 The system operates at auxiliary heat.

2.4 Once the thermostat demand is satisfied, the CTK0* thermostat commands the air handler/modular blower to end auxiliary heat operation. The air handler control de-energizes the electric heat sequencer outputs. The ECM blower motor remains energized until any blower OFF delay timing has expired.

3.0 Continuous Fan Operation

3.1 With a demand for continuous fan operation, the CTK0* thermostat sends a fan request to the integrated air handler control along with a fan demand. The controladjustable via the CTK0* thermostat. The compressor delay is intended to eliminate compressor noise during the reversing valve shift.) The compressor will energized (or re-energized) at high stage.

3.2 If the thermostat demand for continuous fan is removed, the CTK0* thermostat commands the integrated air handler control to end continuous fan operation. The integrated AH control immediately de-energizes the ECM blower motor.

4.0 Defrost Operation

4.1 While the system is operating in heat pump heating (see **2.0 Heating Operation**), the control in the outdoor unit may determines that a defrost cycle is needed. Upon determing that a defrost cycle is needed, the UC control de-energizes the condensor fan motor and energizes the reversing valve.

4.2 The compressor may be de-energized for a short delay during the reversing valve shift. (The delay period is adjustable via the CTK0* thermostat. The compressor delay is intended to eliminate compressor noise during the reversing valve shift.) The compressor will energize (or re-energize) at high stage.

4.3 The UC control sends a request for defrost operation to the integrated air handler control. The air handler control energizes the electric heat sequencer outputs and operates the ECM blower model at the electric heat speed.

4.4 Once the defrost cycle is terminated, the heat pump commands the air handler/modular blower to end defrost operation.

4.5 The system returns to heat pump heating operation that was in effect prior to the defrost cycle.

SERVICING

5.0 Emergency Heat Operation

5.1 The CTK0* thermostat sends a request for emergency heat to the air handler/modular blower.

5.2 The air handler control energizes the ECM blower motor at the emergency heat speed. The electric heat sequencer outputs are also energized, thus energizing the electric heaters.

5.3 The system operates at emergency heat.

5.4 Once the thermostat demand is satisfied, the CTK0* thermostat commands the air handler/modular blower to end emergency heat operation. The air handler control de-energizes the electric heat sequencer outputs. The ECM blower motor remains energized until any blower OFF delay timing has expired. energizes the variavble speed ECM motor at fan demand provided by the thermostat. The fan demand provided by the thermostat will be 30%, 50%,or 70% of the air handler's maximum airflow capability. The continuous fan demand is set from the thermostat as low, medium, or high.

S-60 ELECTRIC HEATER (OPTIONAL ITEM)

Optional electric heaters may be added, in the quantities shown in the specifications section, to provide electric resistance heating. Under no condition shall more heaters than the quantity shown be installed.

The low voltage circuit in the air handler is factory wired and terminates at the location provided for the electric heater(s). A minimum of field wiring is required to complete the installation.

Other components such as a Heating/Cooling Thermostat and Outdoor Thermostats are available to complete the installation.

The system CFM can be determined by measuring the static pressure external to the unit. The installation manual supplied with the blower coil, or the blower performance table in the service manual, shows the CFM for the static measured.

Alternately, the system CFM can be determined by operating the electric heaters and indoor blower WITHOUT having the compressor in operation. Measure the temperature rise as close to the blower inlet and outlet as possible.

If other than a 240V power supply is used, refer to the **BTUH CAPACITY CORRECTION FACTOR** chart below.

BTUH CAPACITY CORRECTION FACTOR				
SUPPLY VOLTAGE	250	230	220	208
MULTIPLICATION FACTOR	1.08	.92	.84	.75

EXAMPLE: Five (5) heaters provide 24.0 KW at the rated 240V. Our actual measured voltage is 220V, and our measured temperature rise is 42°F. Find the actual CFM:

Answer: 24.0KW, 42°F Rise, 240 V = 1800 CFM from the **TEMPERATURE RISE** chart on the right.

Heating output at 220 V = 24.0KW x 3.413 x .84 = 68.8 MBH.

Actual CFM = 1800 x .84 Corr. Factor = 1400 CFM.

NOTE: The temperature rise table is for sea level installations. The temperature rise at a particular KW and CFM will be greater at high altitudes, while the external static pressure at a particular CFM will be less.

TEMPERATURE RISE (°F) @ 240V								
CFM	3.0 kW	4.8 kW	7.2 kW	9.6 kW	14.4 kW	19.2 kW	24.0 kW	28.8 kW
600	16	25	38	51	-	-	-	-
700	14	22	33	43	-	-	-	-
800	12	19	29	38	57	-	-	-
900	11	17	26	34	51	-	-	-
1000	10	15	23	30	46	-	-	-
1100	9	14	21	27	41	55	-	-
1200	8	13	19	25	38	50	-	-
1300	7	12	18	23	35	46	-	-
1400	7	11	16	22	32	43	54	65
1500	6	10	15	20	30	40	50	60
1600	6	9	14	19	28	38	47	57
1700	6	9	14	18	27	36	44	53
1800	5	8	13	17	25	34	42	50
1900	5	8	12	16	24	32	40	48
2000	5	8	12	15	23	30	38	45
2100	5	7	11	14	22	29	36	43
2200	4	7	11	14	21	27	34	41
2300	4	7	10	13	20	26	33	39

ELECTRIC HEATER CAPACITY BTUH								
HTR KW	3.0 KW	4.7 KW	6.0 KW	7.0 KW	9.5 KW	14.2 KW	19.5 KW	21.0 KW
BTUH	10200	16200	20400	23800	32400	48600	66500	71600

FORMULAS:

Heating Output = KW x 3413 x Corr. Factor

Actual CFM = CFM (from table) x Corr. Factor

BTUH = KW x 3413

BTUH = CFM x 1.08 x Temperature Rise (T)

$$CFM = \frac{KW \times 3413}{1.08 \times T}$$

$$T = \frac{BTUH}{CFM \times 1.08}$$

SERVICING

S-61A CHECKING HEATER LIMIT CONTROL(S)

Each individual heater element is protected with a limit control device connected in series with each element to prevent overheating of components in case of low airflow. This limit control will open its circuit at approximately 150°F.

WARNING

HIGH VOLTAGE!
Disconnect ALL power before servicing or installing. Multiple power sources may be present. Failure to do so may cause property damage, personal injury or death.

1. Remove the wiring from the control terminals.
2. Using an ohmmeter, test for continuity across the normally closed contacts. No reading indicates the control is open - replace if necessary.

IF FOUND OPEN - REPLACE - DO NOT WIRE AROUND.

S-61B CHECKING HEATER FUSE LINK

(OPTIONAL ELECTRIC HEATERS)

Each individual heater element is protected with a one time fuse link which is connected in series with the element. The fuse link will open at approximately 333°.

WARNING

Disconnect ALL power before servicing.

1. Remove heater element assembly so as to expose fuse link.
2. Using an ohmmeter, test across the fuse link for continuity - no reading indicates the link is open. Replace as necessary.

NOTE: The link is designed to open at approximately 333°F. DO NOT WIRE AROUND - determine reason for failure.

S-62 CHECKING HEATER ELEMENTS

WARNING

Disconnect ALL power before servicing.

1. Disassemble and remove the heating element.
2. Visually inspect the heater assembly for any breaks in the wire or broken insulators.
3. Using an ohmmeter, test the element for continuity - no reading indicates the element is open. Replace as necessary.

S-100 REFRIGERATION REPAIR PRACTICE

DANGER

Always remove the refrigerant charge in a proper manner before applying heat to the system.

When repairing the refrigeration system:

WARNING

HIGH VOLTAGE!
Disconnect ALL power before servicing or installing. Multiple power sources may be present. Failure to do so may cause property damage, personal injury or death.

1. Never open a system that is under vacuum. Air and moisture will be drawn in.
2. Plug or cap all openings.
3. Remove all burrs and clean the brazing surfaces of the tubing with sand cloth or paper. Brazing materials do not flow well on oxidized or oily surfaces.
4. Clean the inside of all new tubing to remove oils and pipe chips.
5. When brazing, sweep the tubing with dry nitrogen to prevent the formation of oxides on the inside surfaces.
6. Complete any repair by replacing the liquid line drier in the system, evacuate and charge.

BRAZING MATERIALS

IMPORTANT NOTE: Torch heat required to braze tubes of various sizes is proportional to the size of the tube. Tubes of smaller size require less heat to bring the tube to brazing temperature before adding brazing alloy. Applying too much heat to any tube can melt the tube. Service personnel must use the appropriate heat level for the size of the tube being brazed.

NOTE: The use of a heat shield when brazing is recommended to avoid burning the serial plate or the finish on the unit. Heat trap or wet rags should be used to protect heat sensitive components such as service valves and TXV valves.

Copper to Copper Joints - Sil-Fos used without flux (alloy of 15% silver, 80% copper, and 5% phosphorous). Recommended heat 1400°F.

Copper to Steel Joints - Silver Solder used without a flux (alloy of 30% silver, 38% copper, 32% zinc). Recommended heat - 1200°F.

SERVICING

S-101 LEAK TESTING (NITROGEN OR NITROGEN-TRACED)

WARNING

To avoid the risk of fire or explosion, never use oxygen, high pressure air or flammable gases for leak testing of a refrigeration system.

WARNING

To avoid possible explosion, the line from the nitrogen cylinder must include a pressure regulator and a pressure relief valve. The pressure relief valve must be set to open at no more than 150 psig.

Pressure test the system using dry nitrogen and soapy water to locate leaks. If you wish to use a leak detector, charge the system to 10 psi using the appropriate refrigerant then use nitrogen to finish charging the system to working pressure, then apply the detector to suspect areas. If leaks are found, repair them. After repair, repeat the pressure test. If no leaks exist, proceed to system evacuation.

S-102 EVACUATION

WARNING

REFRIGERANT UNDER PRESSURE!
Failure to follow proper procedures may cause property damage, personal injury or death.

WARNING

Do not front seat the service valve(s) with the compressor open, with the suction line of the comprssor closed or severely restricted.

IMPORTANT NOTE: Because of the potential damage to compressors, do not allow suction pressure at service valve to drop below 20 PSIG when pumping unit system down for repair. Outdoor section, depending on line set length and amount of charge in system, may not be able to hold the entire system charge.

This is the most important part of the entire service procedure. The life and efficiency of the equipment is dependent upon the thoroughness exercised by the serviceman when evacuating air (non-condensables) and moisture from the system. Air in a system causes high condensing temperature and pressure, resulting in increased power input and reduced performance. Moisture chemically reacts with the refrigerant oil to form corrosive acids. These acids attack motor windings and parts, causing breakdown. The equipment required to thoroughly evacuate the system is a high vacuum pump, capable of producing a vacuum equivalent to 250 microns or less and a vacuum gauge to give a true reading of the vacuum in the system.

NOTE: *Never use the Scroll compressor as a vacuum pump or run when under a high vacuum. Motor damage could occur*.

Condensing unit liquid and suction valves are closed to contain the charge within the unit. The unit is shipped with the valve stems closed and caps installed. **Do not open valves until the system is evacuated.**

1. Connect the vacuum pump with 250 micron capability to the service valves.
2. Evacuate the system to 250 microns or less using suction **and** liquid service valves. Using both valves is necessary as some compressors create a mechanical seal separating the sides of the system.
3. Close pump valve and hold vacuum for 10 minutes. Typically pressure will rise during this period.
4. If the pressure rises to 1000 microns or less and remains steady the system is considered leak free; proceed to startup.
5. If pressure rises above 1000 microns but holds steady below 2000 microns, moisture and/or non-condensibles may be present or the system may have a small leak.
6. Return to step 2: If the same result is encountered check for leaks as previously indicated and repair as necessary then repeat evacuation.
7. If pressure rises above 2000 microns, a leak is present. Check for leaks as previously indicated and repair as necessary then repeat evacuation.

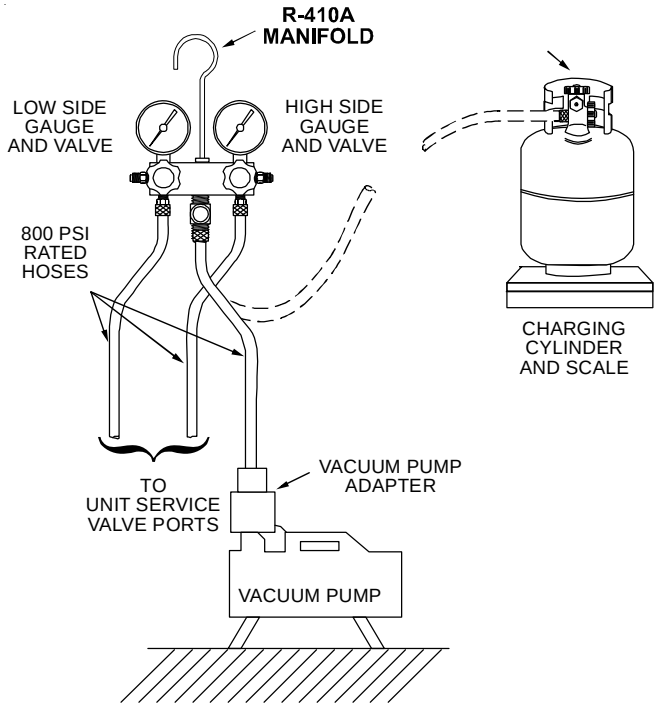

EVACUATION

SERVICING

S-103 CHARGING

WARNING

REFRIGERANT UNDER PRESSURE!
*** Do not overcharge system with refrigerant.**
*** Do not operate unit in a vacuum or at negative pressure.**
Failure to follow proper procedures may cause property damage, personal injury or death.

CAUTION

Use refrigerant certified to AHRI standards. Used refrigerant may cause compressor damage and is not covered under the warranty. Most portable machines cannot clean used refrigerant to meet AHRI standards.

CAUTION

Damage to the unit caused by operating the compressor with the suction valve closed is not covered under the warranty and may cause serious compressor damage.

Charge the system with the exact amount of refrigerant. Refer to the specification section or check the unit nameplates for the correct refrigerant charge. An inaccurately charged system will cause future problems.

NOTE: R410A should be drawn out of the storage container or drum in liquid form due to its fractionation properties, but should be "Flashed" to its gas state before entering the system. There is commercially available restriction devices that fit into the system charging hose set to accomplish this. **DO NOT charge liquid R410A into the compressor.**

NOTE: Power must be supplied to the 18 SEER outdoor units containing ECM motors before the power is applied to the indoor unit. Sending a low voltage signal without high voltage power present at the outdoor unit can cause malfunction of the control module on the ECM motor.

Adequate refrigerant charge for the matching evaporator coil or air handler and 15 feet of line set is supplied with the condensing unit. If using evaporator coils or air handlers other than HSVTC coil it may be necessary to add or remove refrigerant to attain proper charge. If line set exceeds 15 feet in length, refrigerant should be added at .6 ounces per foot of liquid line.

NOTE: The outdoor temperature should be 60°F or higher when charging the unit.Charge should always be checked using subcooling when using TXV equipped indoor coil to verify proper charge. **Open the suction service valve first!** If the liquid service valve is opened first, oil from the compressor may be drawn into the indoor coil TXV, restricting refrigerant flow and affecting operation of the system.

When opening valves with retainers, open each valve only until the top of the stem is 1/8" from the retainer. To avoid loss of refrigerant, DO NOT apply pressure to the retainer. When opening valves without a retainer remove service valve cap and insert a hex wrench into the valve stem and back out the stem by turning the hex wrench counterclockwise. Open the valve until it contacts the rolled lip of the valve body.

NOTE: These are not back-seating valves. It is not necessary to force the stem tightly against the rolled lip.

After the refrigerant charge has bled into the system, open the liquid service valve. The service valve cap is the secondary seal for the valve and must be properly tightened to prevent leaks. Make sure cap is clean and apply refrigerant oil to threads and sealing surface on inside of cap. Tighten cap finger-tight and then tighten additional 1/6 of a turn (1 wrench flat) to properly seat the sealing surfaces.

EXPANSION VALVE SYSTEM

NOTE: Units matched with indoor coils equipped with non-adjustable TXV should be charged by subcooling only.

NOTE: The TXV should NOT be adjusted at light load conditions 55º to 60ºF. Use the following guidelines and methods to check unit operation and ensure that the refrigerant charge is within limits. Charge the unit on low stage.

Units Equipped with Adjustable Expansion Valves should be charged by Subcooling and Superheat adjusted only if necessary.

1. Purge gauge lines. Connect service gauge manifold to base-valve service ports. Run the system in low stage at least 10 minutes to allow pressure to stabilize.

2. Temporarily install a thermometer on the liquid line at the liquid line service valve and 4-6" from the compressor on the suction line. Ensure the thermometer makes adequate contact and is insulated for best possible readings. Use liquid line temperature to determine subcooling and vapor temperature to determine superheat.

3. Check subcooling and superheat. Systems with TXV application should have a subcooling of 5 to 7°F and superheat of 7 to 9 °F.

   a. If subcooling and superheat are low, adjust TXV to 7 to 9 ºF superheat, and then check subcooling.

NOTE: To adjust superheat, turn the valve stem clockwise to increase and counter clockwise to decrease.

   b. If subcooling is low and superheat is high, add charge to raise subcooling to 5 to 7 °F then check superheat.

   c. If subcooling and superheat are high, adjust TXV valve to 7 to 9 ºF superheat, then check subcooling.

   d. If subcooling is high and superheat is low, adjust TXV valve to 7 to 9 ºF superheat and remove charge to lower the subcooling to 5 to 7 ºF.

NOTE: Do NOT adjust the charge based on suction pressure unless there is a gross undercharge.

4. Disconnect manifold set, installation is complete.

SUBCOOLING FORMULA = SATURATED LIQUID TEMP. - LIQUID LINE TEMP.

NOTE: Check the Schrader ports for leaks and tighten valve cores if necessary. Install caps finger-tight.

HEAT PUMP - HEATING CYCLE

The proper method of charging a heat pump in the heat mode is by weight with the additional charge adjustments for line size, line length, and other system components. For best results on outdoor units with TXVs, superheat should be 2-5°F at 4-6" from the compressor. Make final charge adjustments in the cooling cycle.

S-104 CHECKING COMPRESSOR EFFICIENCY

The reason for compressor inefficiency is broken or damaged scroll flanks on Scroll compressors, reducing the ability of the compressor to pump refrigerant vapor.

The condition of the scroll flanks is checked in the following manner.

1. Attach gauges to the high and low side of the system.
2. Start the system and run a "Cooling Performance Test.

If the test shows:

a. Below normal high side pressure.

b. Above normal low side pressure.

c. Low temperature difference across coil.

d. Low amp draw at compressor.

And the charge is correct. The compressor is faulty - replace the compressor.

S-106 OVERFEEDING

Overfeeding by the expansion valve results in high suction pressure, cold suction line, and possible liquid slugging of the compressor.

If these symptoms are observed:

1. Check for an overcharged unit by referring to the cooling performance charts in the servicing section.
2. Check the operation of the power element in the valve as explained in S-110 Checking Expansion Valve Operation.
3. Check for restricted or plugged equalizer tube.

S-107 UNDERFEEDING

Underfeeding by the expansion valve results in low system capacity and low suction pressures.

If these symptoms are observed:

1. Check for a restricted liquid line or drier. A restriction will be indicated by a temperature drop across the drier.
2. Check the operation of the power element of the valve as described in S-110 Checking Expansion Valve Operation.

S-108 SUPERHEAT

The expansion valves are factory adjusted to maintain 7 to 9 degrees superheat of the suction gas. Before checking the superheat or replacing the valve, perform all the procedures outlined under Air Flow, Refrigerant Charge, Expansion Valve - Overfeeding, Underfeeding. These are the most common causes for evaporator malfunction.

CHECKING SUPERHEAT

Refrigerant gas is considered superheated when its temperature is higher than the saturation temperature corresponding to its pressure. The degree of superheat equals the degrees of temperature increase above the saturation temperature at existing pressure. See Temperature - Pressure Chart on following pages.

⚠ CAUTION

To prevent personal injury, carefully connect and disconnect manifold gauge hoses. Escaping liquid refrigerant can cause burns. Do not vent refrigerant to atmosphere. Recover during system repair or final unit disposal.

1. Run system at least 10 minutes to allow pressure to stabilize.
2. For best results, temporarily install a thermometer on the liquid line at the liquid line service valve and 4-6" from the compressor on the suction line. Ensure the thermometer makes adequate contact and is insulated for best possible readings. Use liquid line temperature to determine sub-cooling and vapor temperature to determine superheat.

   NOTE: An optional method is to locate the thermometer at the suction line service valve. Ensure the thermometer makes adequate contact and is insulated for best possible readings.

3. Refer to the superheat table provided for proper system superheat. Add charge to lower superheat or recover charge to raise superheat.

Superheat Formula = Suct. Line Temp. - Sat. Suct. Temp.

EXAMPLE:

a. Suction Pressure = 143

b. Corresponding Temp. °F. = 50

c. Thermometer on Suction Line = 61°F.

To obtain the degrees temperature of superheat, subtract 50.0 from 61.0°F.

The difference is 11° Superheat. The 11° Superheat would fall in the ± range of allowable superheat.

S-109 CHECKING SUBCOOLING

Refrigerant liquid is considered subcooled when its temperature is lower than the saturation temperature corresponding to its pressure. The degree of subcooling equals the degrees of temperature decrease below the saturation temperature at the existing pressure.

SERVICING

1. Attach an accurate thermometer or preferably a thermocouple type temperature tester to the liquid line as it leaves the condensing unit.
2. Install a high side pressure gauge on the high side (liquid) service valve at the front of the unit.
3. Record the gauge pressure and the temperature of the line.
4. Review the technical information manual or specification sheet for the model being serviced to obtain the design subcooling.
5. Compare the hi-pressure reading to the "Required Liquid Line Temperature" chart (page 108). Find the hi-pressure value on the left column. Follow that line right to the column under the design subcooling value. Where the two intersect is the required liquid line temperature.

   Alternately you can convert the liquid line pressure gauge reading to temperature by finding the gauge reading in Temperature - Pressure Chart and reading to the left, find the temperature in the °F. Column.
6. The difference between the thermometer reading and pressure to temperature conversion is the amount of subcooling.

Add charge to raise subcooling. Recover charge to lower subcooling.

Subcooling Formula = Sat. Liquid Temp. - Liquid Line Temp.

EXAMPLE:

a. Liquid Line Pressure = 417
b. Corresponding Temp. °F. = 120°
c. Thermometer on Liquid line = 109°F.

To obtain the amount of subcooling subtract 109°F from 120°F.

The difference is 11° subcooling. See the specification sheet or technical information manual for the design subcooling range for your unit.

S-110 CHECKING EXPANSION VALVE OPERATION

1. Remove the remote bulb of the expansion valve from the suction line.
2. Start the system and cool the bulb in a container of ice water, closing the valve. As you cool the bulb, the suction pressure should fall and the suction temperature will rise.
3. Next warm the bulb in your hand. As you warm the bulb, the suction pressure should rise and the suction temperature will fall.
4. If a temperature or pressure change is noticed, the expansion valve is operating. If no change is noticed, the valve is restricted, the power element is faulty, or the equalizer tube is plugged.
5. Capture the charge, replace the valve and drier, evacuate and recharge.

S-112 CHECKING RESTRICTED LIQUID LINE

When the system is operating, the liquid line is warm to the touch. If the liquid line is restricted, a definite temperature drop will be noticed at the point of restriction. In severe cases, frost will form at the restriction and extend down the line in the direction of the flow.

Discharge and suction pressures will be low, giving the appearance of an undercharged unit. However, the unit will have normal to high subcooling.

Locate the restriction, replace the restricted part, replace drier, evacuate and recharge.

S-113 OVERCHARGE OF REFRIGERANT

An overcharge of refrigerant is normally indicated by an excessively high head pressure.

An evaporator coil, using an expansion valve metering device, will basically modulate and control a flooded evaporator and prevent liquid return to the compressor.

An evaporator coil, using a capillary tube metering device, could allow refrigerant to return to the compressor under extreme overcharge conditions. Also with a capillary tube metering device, extreme cases of insufficient indoor air can cause icing of the indoor coil and liquid return to the compressor, but the head pressure would be lower.

There are other causes for high head pressure which may be found in the "Service Problem Analysis Guide."

If other causes check out normal, an overcharge or a system containing non-condensables would be indicated.

If this system is observed:

1. Start the system.
2. Remove and capture small quantities of gas from the suction line dill valve until the head pressure is reduced to normal.
3. Observe the system while running a cooling performance test. If a shortage of refrigerant is indicated, then the system contains non-condensables.

S-114 NON-CONDENSABLES

If non-condensables are suspected, shut down the system and allow the pressures to equalize. Wait at least 15 minutes. Compare the pressure to the temperature of the coldest coil since this is where most of the refrigerant will be. If the pressure indicates a higher temperature than that of the coil temperature, non-condensables are present.

Non-condensables are removed from the system by first removing the refrigerant charge, replacing and/or installing liquid line drier, evacuating and recharging.

SERVICING

Pressure vs. Temperature Chart											
R-410A											
PSIG	°F	PSIG	°F	PSIG	°F	PSIG	°F	PSIG	°F	PSIG	°F
12	-37.7	114.0	37.8	216.0	74.3	318.0	100.2	420.0	120.7	522.0	137.6
14	-34.7	116.0	38.7	218.0	74.9	320.0	100.7	422.0	121.0	524.0	137.9
16	-32.0	118.0	39.5	220.0	75.5	322.0	101.1	424.0	121.4	526.0	138.3
18	-29.4	120.0	40.5	222.0	76.1	324.0	101.6	426.0	121.7	528.0	138.6
20	-36.9	122.0	41.3	224.0	76.7	326.0	102.0	428.0	122.1	530.0	138.9
22	-24.5	124.0	42.2	226.0	77.2	328.0	102.4	430.0	122.5	532.0	139.2
24	-22.2	126.0	43.0	228.0	77.8	330.0	102.9	432.0	122.8	534.0	139.5
26	-20.0	128.0	43.8	230.0	78.4	332.0	103.3	434.0	123.2	536.0	139.8
28	-17.9	130.0	44.7	232.0	78.9	334.0	103.7	436.0	123.5	538.0	140.1
30	-15.8	132.0	45.5	234.0	79.5	336.0	104.2	438.0	123.9	540.0	140.4
32	-13.8	134.0	46.3	236.0	80.0	338.0	104.6	440.0	124.2	544.0	141.0
34	-11.9	136.0	47.1	238.0	80.6	340.0	105.1	442.0	124.6	548.0	141.6
36	-10.1	138.0	47.9	240.0	81.1	342.0	105.4	444.0	124.9	552.0	142.1
38	-8.3	140.0	48.7	242.0	81.6	344.0	105.8	446.0	125.3	556.0	142.7
40	-6.5	142.0	49.5	244.0	82.2	346.0	106.3	448.0	125.6	560.0	143.3
42	-4.5	144.0	50.3	246.0	82.7	348.0	106.6	450.0	126.0	564.0	143.9
44	-3.2	146.0	51.1	248.0	83.3	350.0	107.1	452.0	126.3	568.0	144.5
46	-1.6	148.0	51.8	250.0	83.8	352.0	107.5	454.0	126.6	572.0	145.0
48	0.0	150.0	52.5	252.0	84.3	354.0	107.9	456.0	127.0	576.0	145.6
50	1.5	152.0	53.3	254.0	84.8	356.0	108.3	458.0	127.3	580.0	146.2
52	3.0	154.0	54.0	256.0	85.4	358.0	108.8	460.0	127.7	584.0	146.7
54	4.5	156.0	54.8	258.0	85.9	360.0	109.2	462.0	128.0	588.0	147.3
56	5.9	158.0	55.5	260.0	86.4	362.0	109.6	464.0	128.3	592.0	147.9
58	7.3	160.0	56.2	262.0	86.9	364.0	110.0	466.0	128.7	596.0	148.4
60	8.6	162.0	57.0	264.0	87.4	366.0	110.4	468.0	129.0	600.0	149.0
62	10.0	164.0	57.7	266.0	87.9	368.0	110.8	470.0	129.3	604.0	149.5
64	11.3	166.0	58.4	268.0	88.4	370.0	111.2	472.0	129.7	608.0	150.1
66	12.6	168.0	59.0	270.0	88.9	372.0	111.6	474.0	130.0	612.0	150.6
68	13.8	170.0	59.8	272.0	89.4	374.0	112.0	476.0	130.3	616.0	151.2
70	15.1	172.0	60.5	274.0	89.9	376.0	112.4	478.0	130.7	620.0	151.7
72	16.3	174.0	61.1	276.0	90.4	378.0	112.6	480.0	131.0	624.0	152.3
74	17.5	176.0	61.8	278.0	90.9	380.0	113.1	482.0	131.3	628.0	152.8
76	18.7	178.0	62.5	280.0	91.4	382.0	113.5	484.0	131.6	632.0	153.4
78	19.8	180.0	63.1	282.0	91.9	384.0	113.9	486.0	132.0	636.0	153.9
80	21.0	182.0	63.8	284.0	92.4	386.0	114.3	488.0	132.3	640.0	154.5
82	22.1	184.0	64.5	286.0	92.8	388.0	114.7	490.0	132.6	644.0	155.0
84	23.2	186.0	65.1	288.0	93.3	390.0	115.0	492.0	132.9	648.0	155.5
86	24.3	188.0	65.8	290.0	93.8	392.0	115.5	494.0	133.3	652.0	156.1
88	25.4	190.0	66.4	292.0	94.3	394.0	115.8	496.0	133.6	656.0	156.6
90	26.4	192.0	67.0	294.0	94.8	396.0	116.2	498.0	133.9	660.0	157.1
92	27.4	194.0	67.7	296.0	95.2	398.0	116.6	500.0	134.0	664.0	157.7
94	28.5	196.0	68.3	298.0	95.7	400.0	117.0	502.0	134.5	668.0	158.2
96	29.5	198.0	68.9	300.0	96.2	402.0	117.3	504.0	134.8	672.0	158.7
98	30.5	200.0	69.5	302.0	96.6	404.0	117.7	506.0	135.2	676.0	159.2
100	31.2	202.0	70.1	304.0	97.1	406.0	118.1	508.0	135.5	680.0	159.8
102	32.2	204.0	70.7	306.0	97.5	408.0	118.5	510.0	135.8	684.0	160.3
104	33.2	206.0	71.4	308.0	98.0	410.0	118.8	512.0	136.1	688.0	160.8
106	34.1	208.0	72.0	310.0	98.4	412.0	119.2	514.0	136.4	692.0	161.3
108	35.1	210.0	72.6	312.0	98.9	414.0	119.6	516.0	136.7	696.0	161.8
110	35.5	212.0	73.2	314.0	99.3	416.0	119.9	518.0	137.0		
112	36.9	214.0	73.8	316.0	99.7	418.0	120.3	520.0	137.3		

*Based on ALLIED SIGNAL Data

REQUIRED LIQUID LINE TEMPERATURE						
LIQUID PRESSURE AT SERVICE VALVE (PSIG)	REQUIRED SUBCOOLING TEMPERATURE (°F)					
	8	10	12	14	16	18
189	58	56	54	52	50	48
195	60	58	56	54	52	50
202	62	60	58	56	54	52
208	64	62	60	58	56	54
215	66	64	62	60	58	56
222	68	66	64	62	60	58
229	70	68	66	64	62	60
236	72	70	68	66	64	62
243	74	72	70	68	66	64
251	76	74	72	70	68	66
259	78	76	74	72	70	68
266	80	78	76	74	72	70
274	82	80	78	76	74	72
283	84	82	80	78	76	74
291	86	84	82	80	78	76
299	88	86	84	82	80	78
308	90	88	86	84	82	80
317	92	90	88	86	84	82
326	94	92	90	88	86	84
335	96	94	92	90	88	86
345	98	96	94	92	90	88
354	100	98	96	94	92	90
364	102	100	98	96	94	92
374	104	102	100	98	96	94
384	106	104	102	100	98	96
395	108	106	104	102	100	98
406	110	108	106	104	102	100
416	112	110	108	106	104	102
427	114	112	110	108	106	104
439	116	114	112	110	108	106
450	118	116	114	112	110	108
462	120	118	116	114	112	110
474	122	120	118	116	114	112
486	124	122	120	118	116	114
499	126	124	122	120	118	116
511	128	126	124	122	120	118

SERVICING

CHECKING COMPRESSOR EFFICIENCY

The reason for compressor inefficiency is broken or damaged scroll flanks on Scroll compressors, reducing the ability of the compressor to pump refrigerant vapor. The condition of the scroll flanks is checked in the following manner.

1. Attach gauges to the high and low side of the system.

2. Start the system and run a "Cooling Performance Test. If the test shows:

   a. Below normal high side pressure.

   b. Above normal low side pressure.

   c. Low temperature difference across coil.

   d. Low amp draw at compressor.

   And the charge is correct. The compressor is faulty – replace the compressor.

S-115 COMPRESSOR BURNOUT

When a compressor burns out, high temperature develops causing the refrigerant, oil and motor insulation to decompose forming acids and sludge.

If a compressor is suspected of being burned-out, attach a refrigerant hose to the liquid line dill valve and properly remove and dispose of the refrigerant.

NOTICE

Violation of EPA regulations may result in fines or other penalties.

Now determine if a burn out has actually occurred. Confirm by analyzing an oil sample using a Sporlan Acid Test Kit, AK-3 or its equivalent.

Remove the compressor and obtain an oil sample from the suction stub. If the oil is not acidic, either a burnout has not occurred or the burnout is so mild that a complete clean-up is not necessary.

If acid level is unacceptable, the system must be cleaned by using the clean-up drier method.

CAUTION

Do not allow the sludge or oil to contact the skin. Severe burns may result.

NOTE: The Flushing Method using R-11 refrigerant is no longer approved by Amana® Brand Heating-Cooling.

Suction Line Drier Clean-Up Method

The POE oils used with R410A refrigerant is an excellent solvent. In the case of a burnout, the POE oils will remove any burnout residue left in the system. If not captured by the refrigerant filter, they will collect in the compressor or other system components, causing a failure of the replacement compressor and/or spread contaminants throughout the system, damaging additional components.

Install a field supplied suction line drier. This drier should be installed as close to the compressor suction fitting as possible. The filter must be accessible and be rechecked for pressure drop after the system has operated for a time. It may be necessary to use new tubing and form as required.

NOTE: At least twelve (12) inches of the suction line immediately out of the compressor stub must be discarded due to burned residue and contaminates.

1. Remove compressor discharge line strainer.
2. Remove the liquid line drier and expansion valve.
3 Purge all remaining components with dry nitrogen or carbon dioxide until clean.
4. Install new components **including** liquid line drier.
5. Braze all joints, leak test, evacuate, and recharge system.
6. Start up the unit and record the pressure drop across the drier.
7. Continue to run the system for a minimum of twelve (12) hours and recheck the pressure drop across the drier. Pressure drop should not exceed 6 PSIG.
8. Continue to run the system for several days, repeatedly checking pressure drop across the suction line drier. If the pressure drop never exceeds the 6 PSIG, the drier has trapped the contaminants. Remove the suction line drier from the system.
9. If the pressure drop becomes greater, then it must be replaced and steps 5 through 9 repeated until it does not exceed 6 PSIG.

NOTICE: Regardless, the cause for burnout must be determined and corrected before the new compressor is started.

S-120 REFRIGERANT PIPING

The piping of a refrigeration system is very important in relation to system capacity, proper oil return to compressor, pumping rate of compressor and cooling performance of the evaporator.

POE oils maintain a consistent viscosity over a large temperature range which aids in the oil return to the compressor; however, there will be some installations which require oil return traps. These installations should be avoided whenever possible, as adding oil traps to the refrigerant lines also increases the opportunity for debris and moisture to be introduced into the system. Avoid long running traps in horizontal suction line.

SERVICING

ALUMINUM INDOOR COIL CLEANING

(Qualified Servicer Only)

This unit is equipped with an aluminum tube evaporator coil. The safest way to clean the evaporator coil is to simply flush the coil with water. This cleaning practice remains as the recommended cleaning method for both copper tube and aluminum tube residential cooling coils.

An alternate cleaning method is to use one of the products listed in the technical publication **TP-109 (shipped in the literature bag with the unit)** to clean the coils. The cleaners listed are the only agents deemed safe and approved for use to clean round tube aluminum coils. TP-109 is available on the web site in Partner Link > Service Toolkit.

NOTE: Ensure coils are rinsed well after use of any chemical cleaners.

Air Handler Static Pressure Readings

S-203 SINGLE PIECE AIR HANDLER EXTERNAL STATIC PRESSURE

To determine proper airflow, proceed as follows:

1. Using a Inclined Manometer or Magnehelic gauge , measure the static pressure of the return duct at the inlet of the air handler, this will be a negative pressure (for example -.30"wc)

2. Measure the static pressure of the supply duct at the outlet of the air handler, this should be a positive pressure (for example .20"wc).

3. Add the two readings together (for example -.30"wc + .20"wc = .50"wc total external static pressure.

NOTE: Both readings may be taken simultaneously and read directly on the manometer if so desired.

4. Consult proper air handler airflow chart for quantity of air (CFM) at the measured external static pressure.

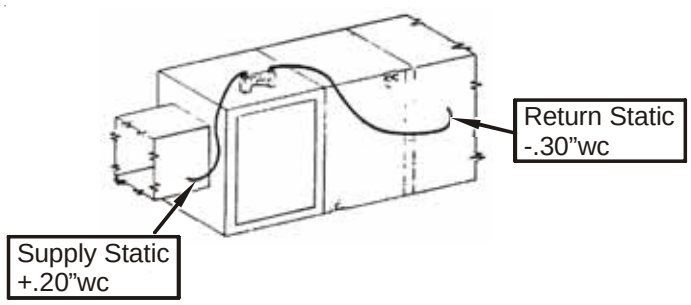

S-203A TWO PIECE AIR HANDLER EXTERNAL STATIC PRESSURE

To determine proper airflow, proceed as follows:

1. Using a Inclined Manometer or Magnehelic gauge, measure the static pressure between the outlet of the evaporator coil and the inlet of the air handler, this will be a negative pressure (for example -.30"wc)

2. Measure the static pressure of the supply duct at the outlet of the unit, this should be a positive pressure (for example .20"wc).

3. Add the two readings together (for example -.30"wc + .20"wc = .50"wc total static pressure.

NOTE: Both readings may be taken simultaneously and read directly on the manometer if so desired.

4. Consult proper air handler airflow chart for quantity of air (CFM) at the measured external static pressure.

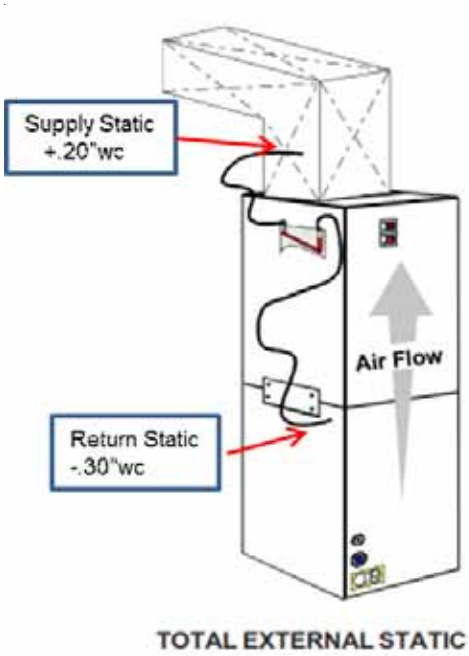

ACCESSORIES WIRING DIAGRAMS

WARNING

HIGH VOLTAGE!
DISCONNECT ALL POWER BEFORE SERVICING OR INSTALLING THIS UNIT. MULTIPLE POWER SOURCES MAY BE PRESENT. FAILURE TO DO SO MAY CAUSE PROPERTY DAMAGE, PERSONAL INJURY OR DEATH.

3-Phase Heat Kit

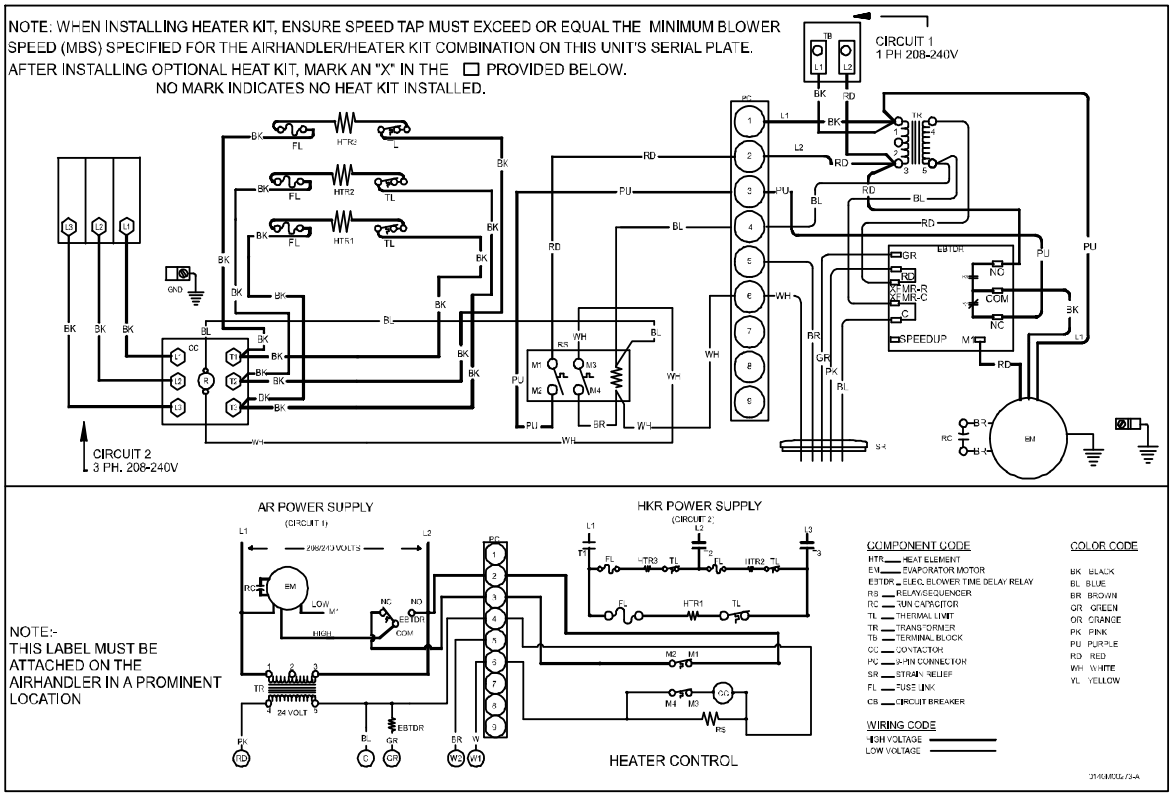

25kW Heat Kit

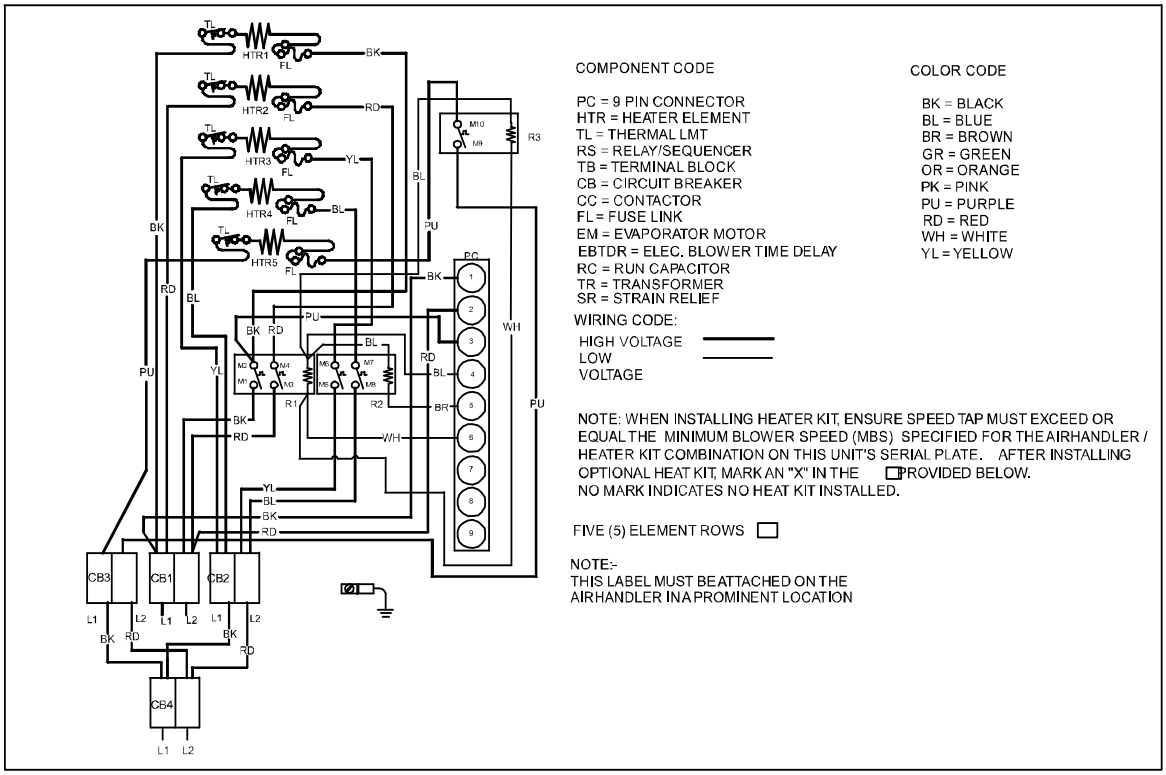

Wiring is subject to change. Always refer to the wiring diagram on the unit for the most up-to-date wiring.

ACCESSORIES WIRING DIAGRAMS

WARNING

HIGH VOLTAGE!
DISCONNECT ALL POWER BEFORE SERVICING OR INSTALLING THIS UNIT. MULTIPLE POWER SOURCES MAY BE PRESENT. FAILURE TO DO SO MAY CAUSE PROPERTY DAMAGE, PERSONAL INJURY OR DEATH.

A/DSXC16

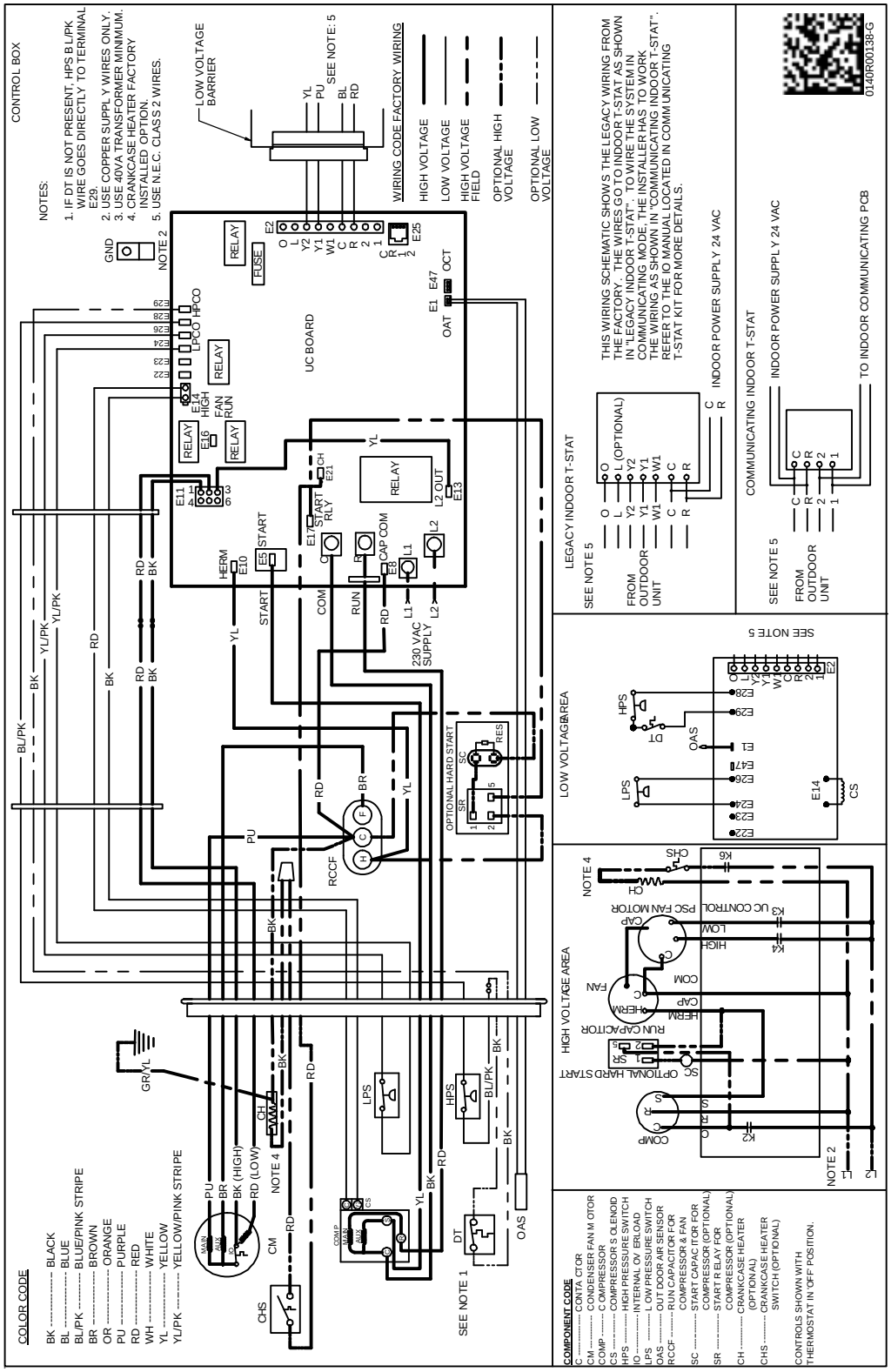

Wiring is subject to change. Always refer to the wiring diagram on the unit for the most up-to-date wiring.

ACCESSORIES WIRING DIAGRAMS

WARNING

HIGH VOLTAGE!
DISCONNECT ALL POWER BEFORE SERVICING OR INSTALLING THIS UNIT. MULTIPLE POWER SOURCES MAY BE PRESENT. FAILURE TO DO SO MAY CAUSE PROPERTY DAMAGE, PERSONAL INJURY OR DEATH.

A/DSXC18

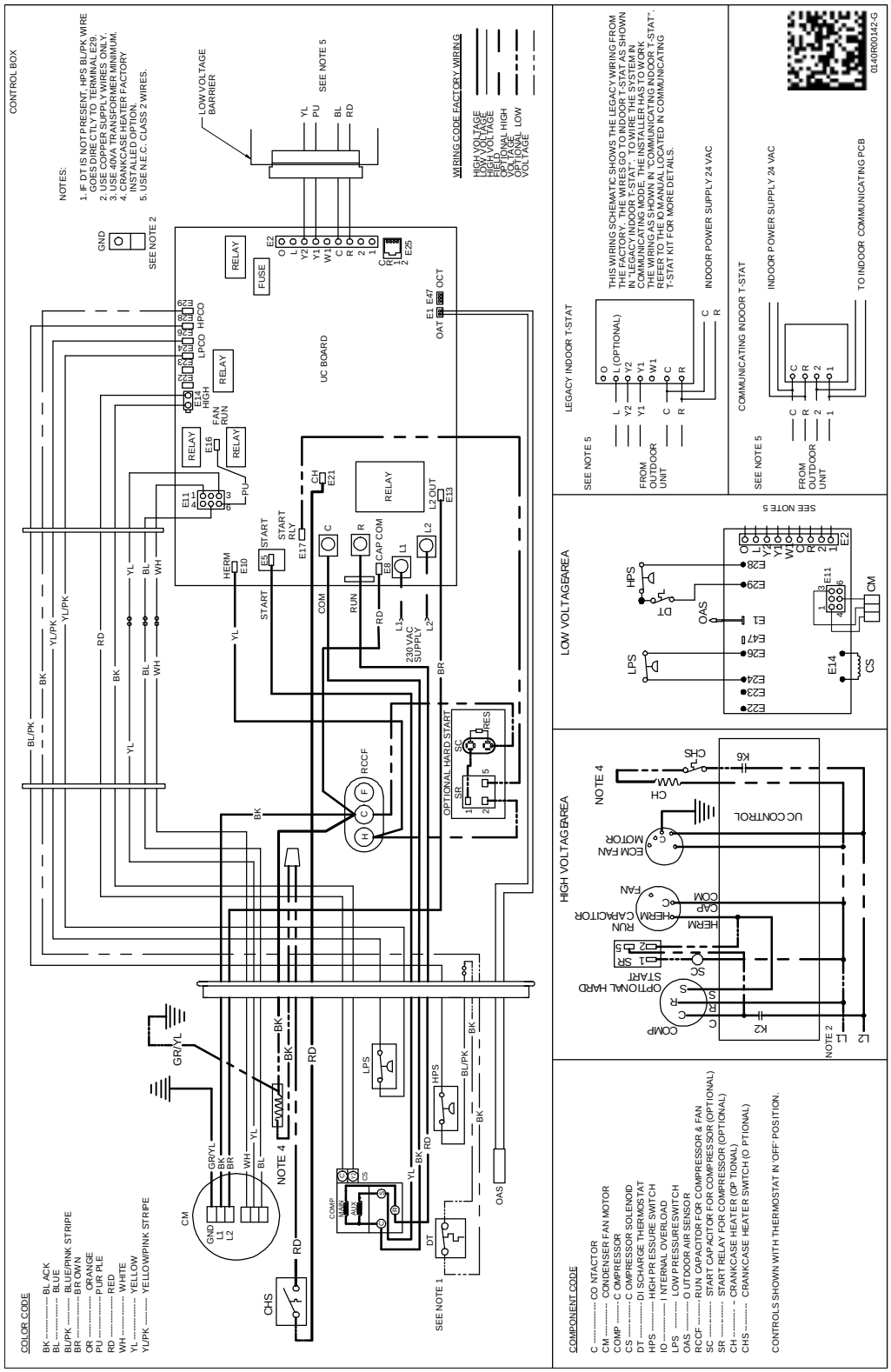

Wiring is subject to change. Always refer to the wiring diagram on the unit for the most up-to-date wiring.

ACCESSORIES WIRING DIAGRAMS

WARNING

HIGH VOLTAGE!
DISCONNECT ALL POWER BEFORE SERVICING OR INSTALLING THIS UNIT. MULTIPLE POWER SOURCES MAY BE PRESENT. FAILURE TO DO SO MAY CAUSE PROPERTY DAMAGE, PERSONAL INJURY OR DEATH.

A/DSZC16

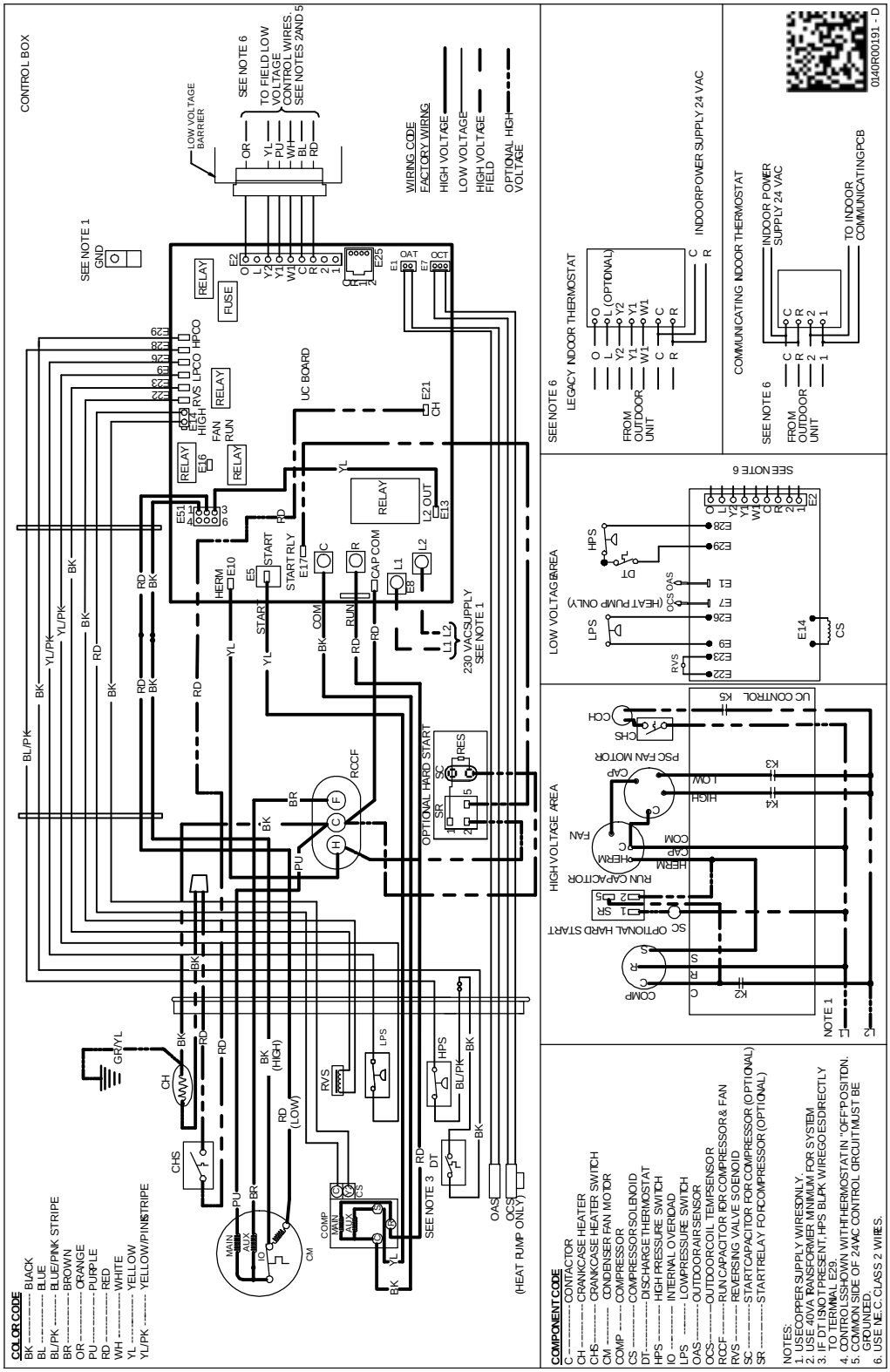

Wiring is subject to change. Always refer to the wiring diagram on the unit for the most up-to-date wiring.

ACCESSORIES WIRING DIAGRAMS

WARNING

HIGH VOLTAGE!
DISCONNECT ALL POWER BEFORE SERVICING OR INSTALLING THIS UNIT. MULTIPLE POWER SOURCES MAY BE PRESENT. FAILURE TO DO SO MAY CAUSE PROPERTY DAMAGE, PERSONAL INJURY OR DEATH.

A/DSZC18

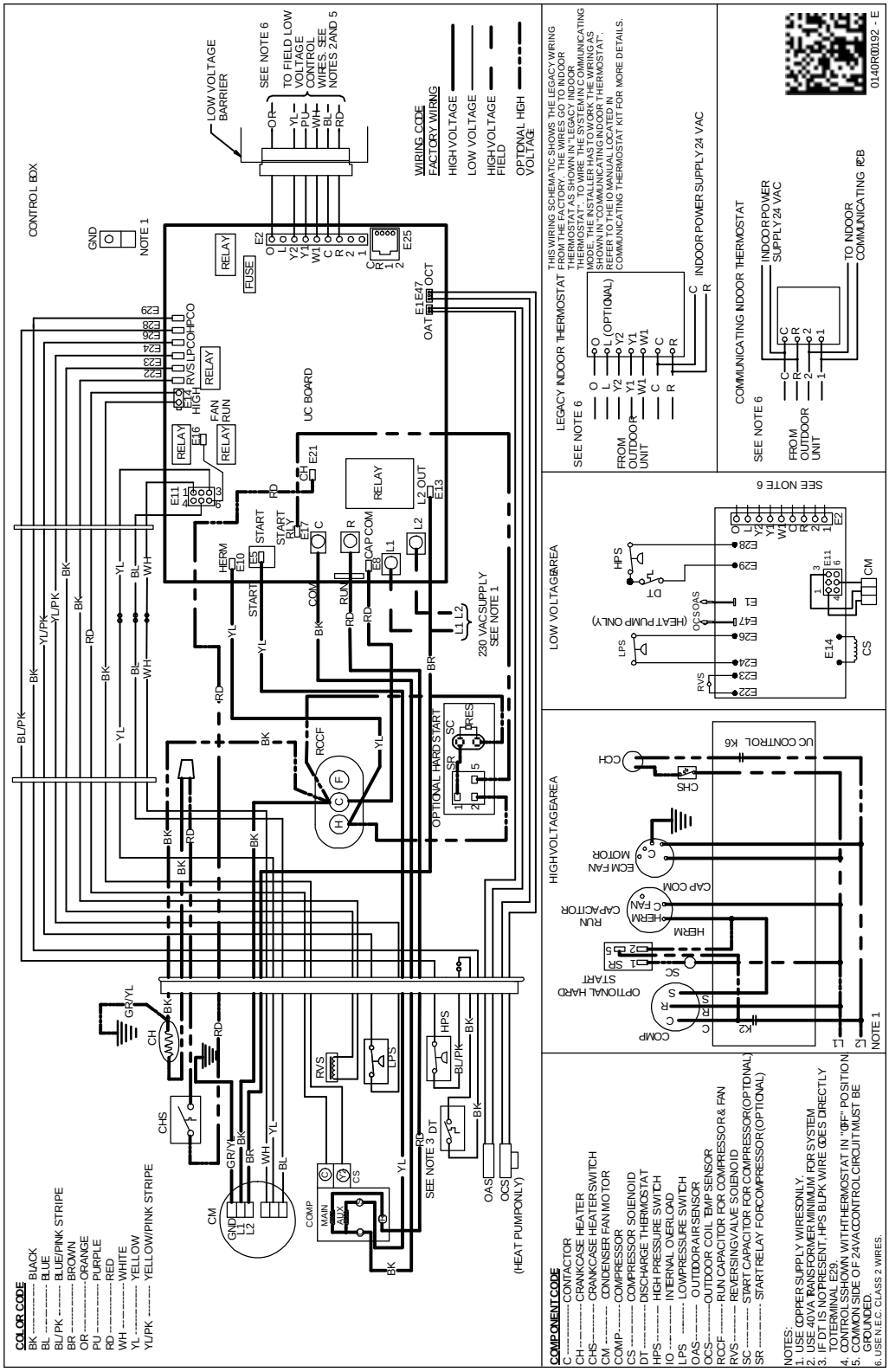

Wiring is subject to change. Always refer to the wiring diagram on the unit for the most up-to-date wiring.

ACCESSORIES WIRING DIAGRAMS

WARNING

HIGH VOLTAGE!
DISCONNECT ALL POWER BEFORE SERVICING OR INSTALLING THIS UNIT. MULTIPLE POWER SOURCES MAY BE PRESENT. FAILURE TO DO SO MAY CAUSE PROPERTY DAMAGE, PERSONAL INJURY OR DEATH.

AVPTC1830-3137 AND 4260

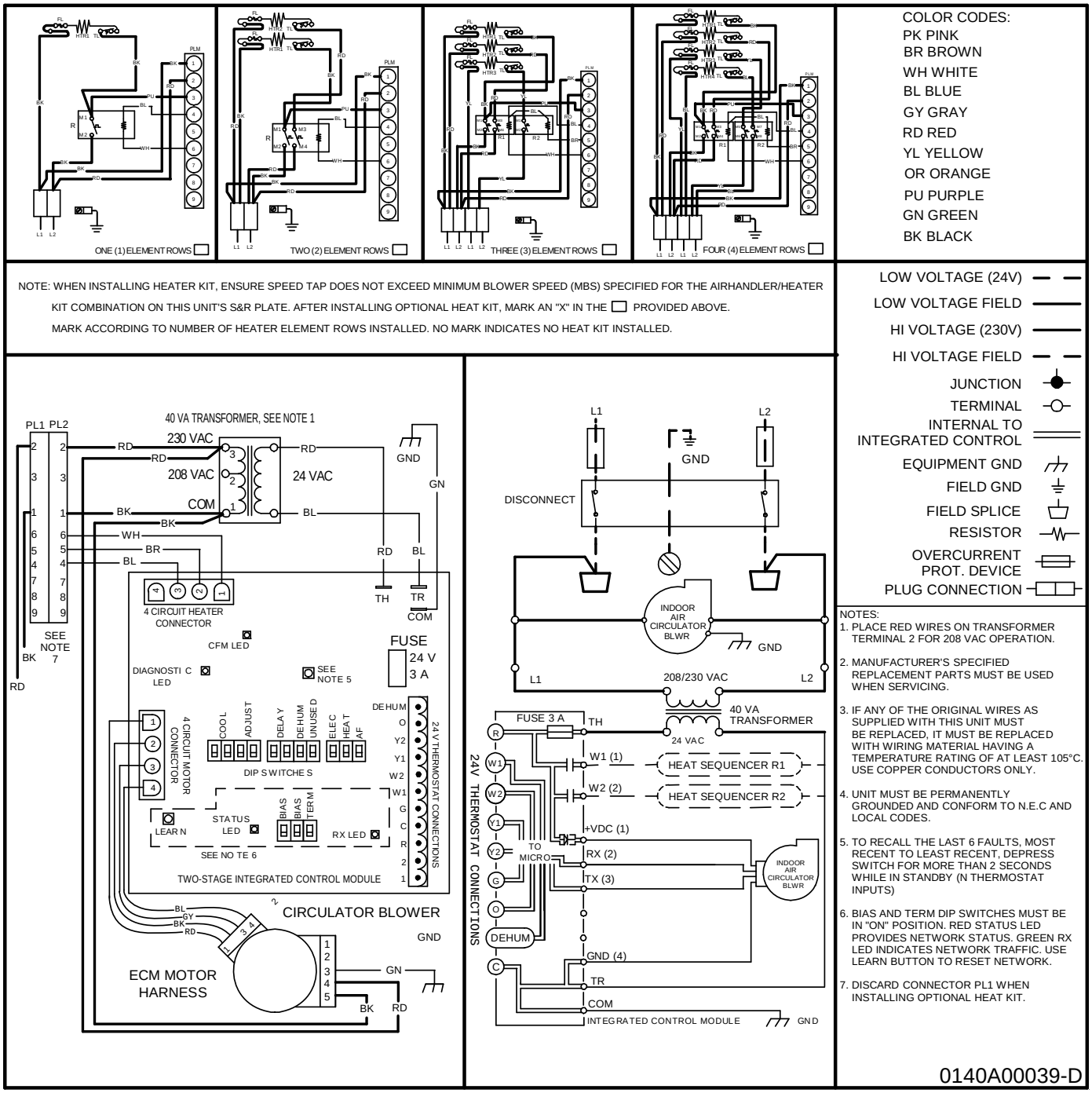

Wiring is subject to change. Always refer to the wiring diagram on the unit for the most up-to-date wiring.

ACCESSORIES WIRING DIAGRAMS

WARNING

HIGH VOLTAGE!
DISCONNECT ALL POWER BEFORE SERVICING OR INSTALLING THIS UNIT. MULTIPLE POWER SOURCES MAY BE PRESENT. FAILURE TO DO SO MAY CAUSE PROPERTY DAMAGE, PERSONAL INJURY OR DEATH.

AVPTC SMART FRAME

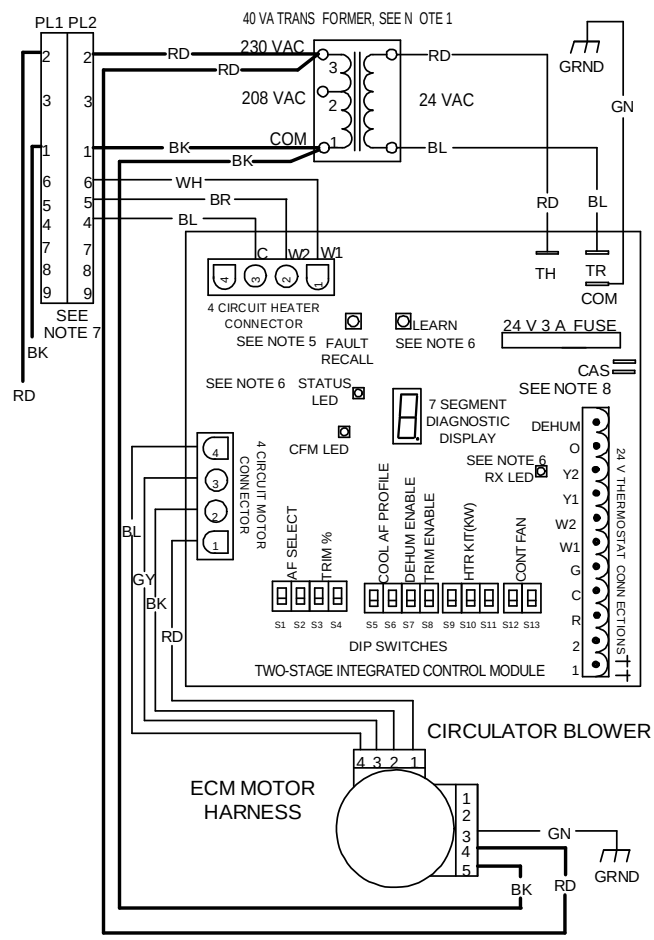

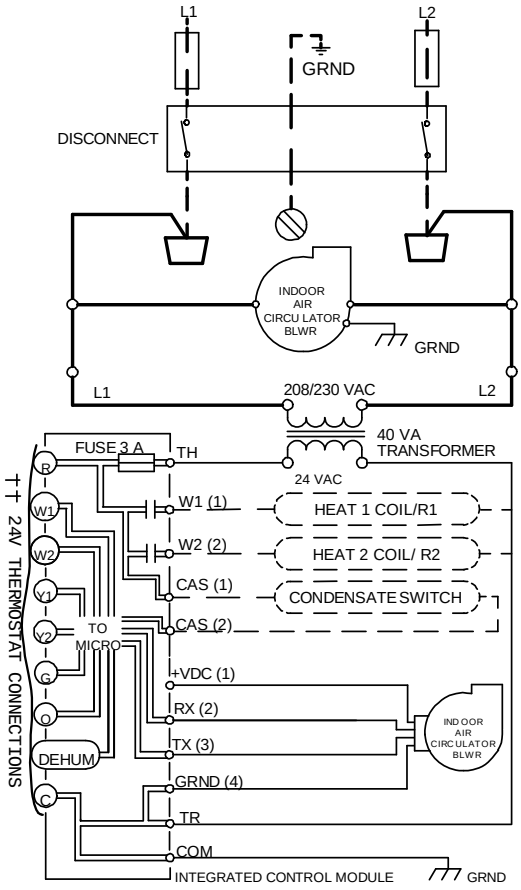

NOTES:

1. PLACE RED WIRES ON TRANSFORMER TERMINAL 2 FOR 208 VAC OPERATION.
2. MANUFACTURER'S SPECIFIED REPLACEMENT PARTS MUST BE USED WHEN SERVICING.
3. IF ANY OF THE ORIGINAL WIRES AS SUPPLIED WITH THIS UNIT MUST BE REPLACED, IT MUST BE REPLACED WITH WIRING MATERIAL HAVING A TEMPERATURE RATING OF AT LEAST 105°C. USE COPPER CONDUCTORS ONLY.
4. UNIT MUST BE PERMANENTLY GROUNDED AND CONFORM TO N.E.C AND LOCAL CODES.
5. TO RECALL THE LAST 6 FAULTS, MOST RECENT TO LEAST RECENT, DEPRESS SWITCH FOR MORE THAN 2 SECONDS WHILE IN STANDBY (NO THERMOSTAT INPUTS)
6. RED STATUS LED PROVIDES NETWORK STATUS. GREEN RX LED INDICATES NETWORK TRAFFIC. USE LEARN BUTTON TO RESET NETWORK.
7. DISCARD CONNECTOR PL1 WHEN INSTALLING OPTIONAL HEAT KIT.
8. THE CONDENSATE ALARM SWITCH (CAS) TERMINALS CAN ONLY BE UTILIZED WITH COMMUNICATING MODES SETUPS AND MUST BE ENABLED WITH A COMMUNICATING THERMOSTAT. THIS FEATURE IS NOT OPERATIONAL WITH LEGACY SYSTEMS.

†† USE N.E.C CLASS 2 WIRE.

INTEGRATED CONTROL

LOW VOLTAGE (24V)
LOW VOLTAGE FIELD
HI VOLTAGE (230V)
HI VOLTAGE FIELD
JUNCTION
TERMINAL
INTERNAL TO
EQUIPMENT GRND
FIELD GRND
FIELD SPLICE
RESISTOR
OVERCURRENT PROT. DEVICE
PLUG CONNECTION

COLOR CODES:
PK ---- PINK
BR ---- BROWN
WH ---- WHITE
BL ---- BLUE
GY ---- GRAY
RD ---- RED
YL ---- YELLOW
OR ---- ORANGE
PU ---- PURPLE
GN ---- GREEN
BK ---- BLACK

0140A00244-B

Wiring is subject to change. Always refer to the wiring diagram on the unit for the most up-to-date wiring.

ACCESSORIES WIRING DIAGRAMS

WARNING

HIGH VOLTAGE!
DISCONNECT ALL POWER BEFORE SERVICING OR INSTALLING THIS UNIT. MULTIPLE POWER SOURCES MAY BE PRESENT. FAILURE TO DO SO MAY CAUSE PROPERTY DAMAGE, PERSONAL INJURY OR DEATH.

MBVC

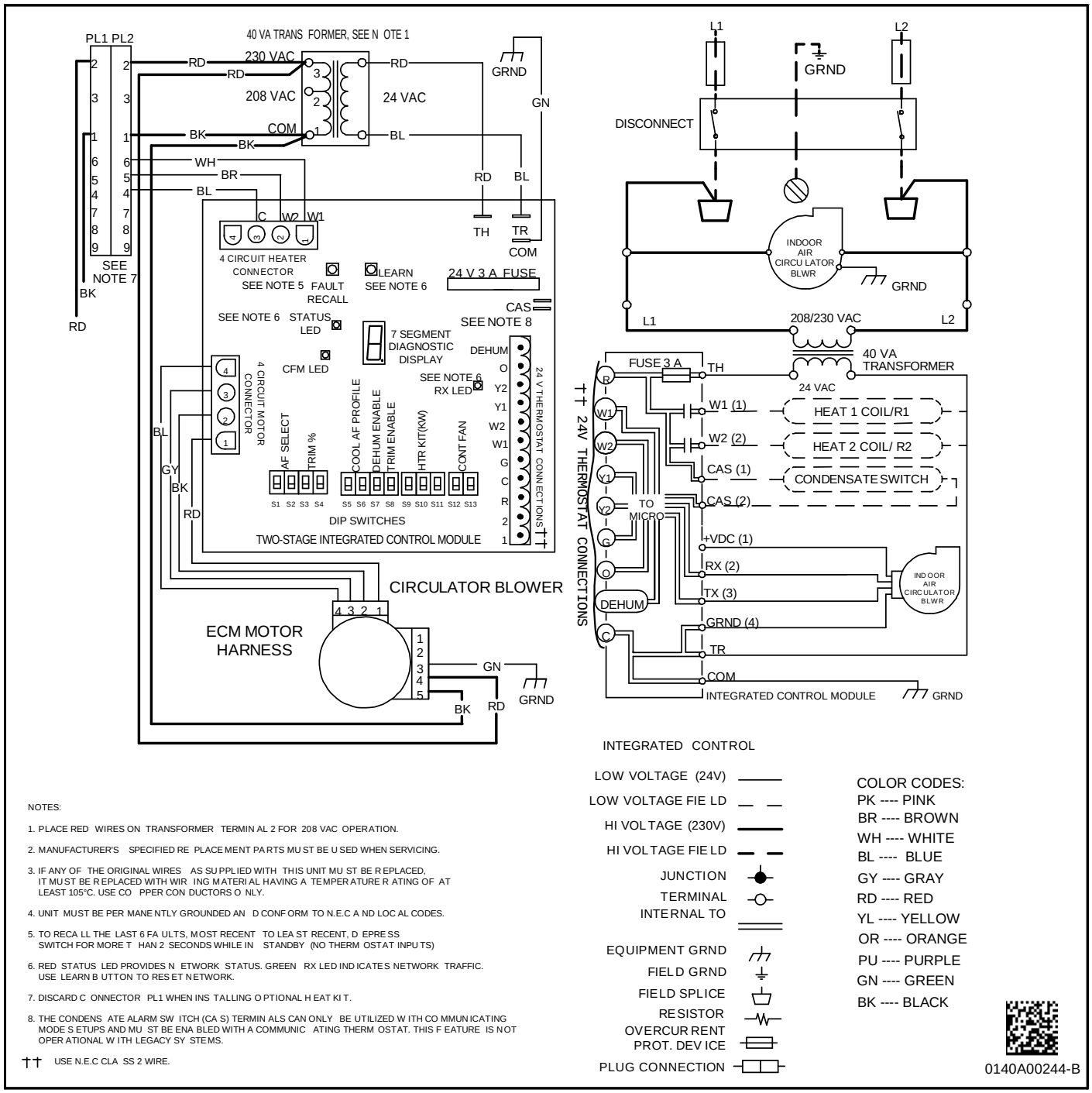

NOTES:

1. PLACE RED WIRES ON TRANSFORMER TERMINAL 2 FOR 208 VAC OPERATION.
2. MANUFACTURER'S SPECIFIED REPLACEMENT PARTS MUST BE USED WHEN SERVICING.
3. IF ANY OF THE ORIGINAL WIRES AS SUPPLIED WITH THIS UNIT MUST BE REPLACED, IT MUST BE REPLACED WITH WIRING MATERIAL HAVING A TEMPERATURE RATING OF AT LEAST 105°C. USE COPPER CONDUCTORS ONLY.
4. UNIT MUST BE PERMANENTLY GROUNDED AND CONFORM TO N.E.C AND LOCAL CODES.
5. TO RECALL THE LAST 6 FAULTS, MOST RECENT TO LEAST RECENT, DEPRESS SWITCH FOR MORE THAN 2 SECONDS WHILE IN STANDBY (NO THERMOSTAT INPUTS)
6. RED STATUS LED PROVIDES NETWORK STATUS. GREEN RX LED INDICATES NETWORK TRAFFIC. USE LEARN BUTTON TO RESET NETWORK.
7. DISCARD CONNECTOR PL1 WHEN INSTALLING OPTIONAL HEAT KIT.
8. THE CONDENSATE ALARM SWITCH (CAS) TERMINALS CAN ONLY BE UTILIZED WITH COMMUNICATING MODES ETUPS AND MUST BE ENABLED WITH A COMMUNICATING THERMOSTAT. THIS FEATURE IS NOT OPERATIONAL WITH LEGACY SYSTEMS.

†† USE N.E.C CLASS 2 WIRE.

Wiring is subject to change. Always refer to the wiring diagram on the unit for the most up-to-date wiring.