# Service and Troubleshooting

## Package Terminal Air Conditioner / Heat Pump
## Standard for R32 and R-410A

This manual is to be used by qualified, professionally trained HVAC technicians only. Daikin does not assume any responsibility for property damage or personal injury due to improper service procedures or services performed by an unqualified person.

Pride and workmanship go into every product to provide our customers with quality products. It is possible, however, that during its lifetime a product may require service. Products should be serviced only by a qualified service technician who is familiar with the safety procedures required in the repair and who is equipped with the proper tools, parts, testing instruments and the appropriate service manual. **REVIEW ALL SERVICE INFORMATION IN THE APPROPRIATE SERVICE MANUAL BEFORE BEGINNING REPAIRS.**

### TABLE OF CONTENTS


IMPORTANT INFORMATION ..... 2
PRODUCT IDENTIFICATION ..... 3
SYSTEM OPERATION ..... 12
SCHEDULED MAINTENANCE ..... 30
SERVICING ..... 33
- CHECKING VOLTAGE ..... 43
- CHECKING THERMOSTAT AND WIRING ..... 43
- HEATER ASSEMBLY ..... 44
- DRAIN PAN VALVE (HEAT PUMP MODELS ONLY) ..... 45
- CAPACITOR CHECK ..... 45
- CHECKING FAN AND MOTOR BLOWER WINDINGS ..... 46
- COMPRESSOR WINDINGS ..... 47
- OVERLOAD ..... 48
- CHECKING COMPRESSOR EFFICIENCY ..... 48
- FILTER DRIER REPLACEMENT ..... 48
- REVERSING VALVE ..... 49

ACCESSORIES ..... 55
WIRING DIAGRAMS ..... 68


**WARNING**

**Do not bypass safety devices.**

**WARNING**

**Only personnel that have been trained to install, adjust, service, maintenance or repair (hereinafter, "service") the equipment specified in this manual should service the equipment.**

**This equipment is not intended for use by persons (including children) with reduced physical, sensory or mental capabilities, or lack of experience and knowledge, unless they have been given supervision or instruction concerning use of the appliance by a person responsible for their safety.**

**Children should be supervised to ensure that they do not play with the equipment.**

**The manufacturer will not be responsible for any injury or property damage arising from improper supervision, service or service procedures. If you service this unit, you assume responsibility for any injury or property damage which may result. In addition, in jurisdictions that require one or more licenses to service the equipment specified in this manual, only licensed personnel should service the equipment. Improper supervision, installation, adjustment, servicing, maintenance or repair of the equipment specified in this manual, or attempting to install, adjust, service or repair the equipment specified in this manual without proper supervision or training may result in product damage, property damage, personal injury or death.**

QUEBEC DISCLOSURE REGARDING AVAILABILITY OF REPLACEMENT PARTS, REPAIR SERVICES AND INFORMATION FOR MAINTENANCE AND REPAIR: Daikin Comfort Technologies Manufacturing, Inc. (Daikin) does not guarantee the availability of (1) replacement parts; (2) repair services; and (3) information necessary to maintain or repair products, within the meaning of section 39.1 of the Consumer Protection Act, CQLR, c P-40.1 and section 79.18 of the Regulation respecting the application of the Consumer Protection Act, CQLR, c P-40.1, r. 3.

AVIS POUR LE QUÉBEC CONCERNANT LA DISPONIBILITÉ DES PIÈCES DE RECHANGE, DES SERVICES DE RÉPARATION ET DES RENSEIGNEMENTS POUR L'ENTRETIEN ET LA RÉPARATION : Daikin Comfort Technologies Manufacturing, Inc. (Daikin) ne garantit pas la disponibilité (1) des pièces de rechange, (2) des services de réparation et (3) des renseignements pour l'entretien et la réparation, au sens de l'article 39.1 de la Loi sur la protection du consommateur, RLRQ c P-40.1 et de l'article 79.18 du Règlement d'application de la Loi sur la protection du consommateur, RLRQ c P-40.1, r 3.


RS4200007r2
December 2025



© 2025 Daikin Comfort Technologies Manufacturing, Inc.

Amana® is a registered trademark of Maytag Corporation or its related companies and is used under license. All rights reserved.

# IMPORTANT INFORMATION

This device, which was assembled by Daikin Comfort Technologies Manufacturing, Inc., contains a component that is classified as an intentional radiator. This intentional radiator has been certified by the FCC: FCC ID TF7M90-1000. And this international radiator has an Industry Canada ID: IC 27830-M901C1000.

The manufacturer of the intentional radiator (model no. M90H or M90S) or FCC ID:TF-TF7M90-1000 is Everex Communications Inc, which can be contacted by (510)-687-0075 (www.everexcomm.net).

This device complies with Part 15 of the FCC's Rules. Operation of this device is subject to two conditions:

(1) This device may not cause harmful interference; and
(2) This device must accept any interference received, including interference that may cause undesirable operation.

And this device meets the applicable Industry Canada technical specification.

The FCC responsible party is Daikin Comfort Technologies Manufacturing, Inc. , and may be contacted by calling 713-861-2500, or at 19001 Kermier Rd., Waller TX 77484. (www.DaikinComfort.com)

This equipment has been tested and found to comply with the limits for a Class B digital device, pursuant to part 15 of the FCC Rules. These limits are designed to provide reasonable protection against harmful interference in a residential installation. This equipment generates, uses and can radiate radio frequency energy and, if not installed and used in accordance with the instructions, may cause harmful interference to radio communications. However, there is no guarantee that interference will not occur in a particular installation. If this equipment does cause harmful interference to radio or television reception, which can be determined by turning the equipment off and on, the user is encouraged to try to correct the interference by one or more of the following measures:

- Reorient or relocate the receiving antenna.
- Increase the separation between the equipment and receiver.
- Connect the equipment into an outlet on a circuit different from that to which the receiver is connected.
- Consult the dealer or an experienced radio/TV technician for help.

This equipment complies with FCC radiation exposure limits. To ensure compliance, human proximity to the antenna shall not be less than 20 cm during normal operations.

***NOTE:*** *Changes or modifications not expressly approved by the party responsible for compliance could void the user's authority to operate the equipment.*

## IMPORTANT NOTICES

### RECOGNIZE SAFETY SYMBOLS, WORDS AND LABELS

Pride and workmanship go into every product to provide our customers with quality products. It is possible, however, that during its lifetime a product may require service. Products should be serviced only by a qualified service technician who is familiar with the safety procedures required in the repair and who is equipped with the proper tools, parts, testing instruments and the appropriate service manual. REVIEW ALL SERVICE INFORMATION IN THE APPROPRIATE SERVICE MANUAL BEFORE BEGINNING REPAIRS.

**WARNING**

**THIS AIR CONDITIONER IS NOT MEANT TO PROVIDE UNATTENDED COOLING OR LIFE SUPPORT FOR PERSONS OR ANIMALS WHO ARE UNABLE TO REACT TO THE FAILURE OF THIS PRODUCT. THE FAILURE OF AN UNATTENDED AIR CONDITIONER MAY RESULT IN EXTREME HEAT IN THE CONDITIONED SPACE CAUSING OVERHEATING OR DEATH OF PERSONS OR ANIMALS. PRECAUTIONS MUST BE TAKEN TO WARN OF OR GUARD AGAINST SUCH AN OCCURRENCE.**

### SAFE REFRIGERANT HANDLING

While these items will not cover every conceivable situation, they should serve as a useful guide.

**WARNING**

**HIGH VOLTAGE!**
**DISCONNECT ALL POWER BEFORE SERVICING OR INSTALLING THIS UNIT. MULTIPLE POWER SOURCES MAY BE PRESENT. FAILURE TO DO SO MAY CAUSE PROPERTY DAMAGE, PERSONAL INJURY OR DEATH.**

**WARNING**

**HIGH VOLTAGE**
**DISCONNECT ALL POWER BEFORE SERVICING. MULTIPLE POWER SOURCES MAY BE PRESENT. FAILURE TO DO SO MAY CAUSE PROPERTY DAMAGE, PERSONAL INJURY OR DEATH. DO NOT SERVICE THIS UNIT WITHOUT FIRST SHUTTING OFF POWER TO THE UNIT FROM THE CIRCUIT BREAKER AND/OR REMOVING THE UNIT CORD SET PLUG FROM THE WALL OUTLET. LINE VOLTAGE WILL BE PRESENT AT THE CONTROL BOARD, TERMINALS L1 AND L2 WHENEVER POWER IS APPLIED TO THE UNIT REGARDLESS OF THE MASTER SWITCH POSITION.**

**WARNING**

**THE MANUFACTURER WILL NOT BE RESPONSIBLE FOR ANY INJURY OR PROPERTY DAMAGE ARISING FROM IMPROPER SERVICE OR SERVICE PROCEDURES. IF YOU INSTALL OR PERFORM SERVICE ON THIS UNIT, YOU ASSUME RESPONSIBILITY FOR ANY PERSONAL INJURY OR PROPERTY DAMAGE WHICH MAY RESULT. MANY JURISDICTIONS REQUIRE A LICENSE TO INSTALL OR SERVICE HEARING AND AIR CONDITIONING EQUIPMENT.**

OUTSIDE THE U.S., **call 1-713-861-2500**.
(Not a technical assistance line for dealers.) Your telephone company will bill you for the call.

# PRODUCT IDENTIFICATION NOMENCLATURE

PTC 07 3 K 35 A X X X A A

*BASIC MODEL TYPE*
PTC = Standard Cooler PTAC
PTH = Standard Heat Pump PTHP
DRY = Dehumid Cooler PTAC
PMC = Cooler w/ Makeup Air Kit
PMH = Heat Pump w/ Makeup Air Kit
HEH = High Efficiency Heat Pump
HEC = High Efficiency Cooler

*COOLING CAPACITY*
07 = 7000 BTUH (60 Hz)
09 = 9000 BTUH (60 Hz)
12 = 12000 BTUH (50 *or* 60 Hz)
15 = 15000 BTUH (60 Hz)
17 = 16500 BTUH (60 Hz)

*RATED VOLTAGE*
3 = 230/208V 60Hz 1Ph
4 = 265V 60Hz 1Ph

*DESIGN SERIES*
J = R-32
K = R-410A Redesign 2023

*HEATER SIZE*
00 = no electric heat
15 = 1.5 kW
25 = 2.5 kW
35 = 3.5 kw (230/208V)
= 3.7kW (265V)
50 = 5.0 kW

*FEATURE CODE*
A = St**a**ndard Model
C = **C**orrosion Protection (Seacoast)
D = Power **D**oor
E = Makeup Air **E**lectric Heater
L = **L**ighting Control

P = Condensate **P**ump
Q = **Q**uiet STC Kit

T = **T**ransfere Fan
V = Power **V**ent
*Use up to 4 as needed*
*In Alphabetical order*

Examples
PTC073K35AXXX
PTC073K35CDXX
PTC073K35CQVX
PTC073K35CDQR

*MAJOR/MINOR DESIGN REV.*

*POTENTITIAL FEATURE CODE*
B = Condenser **B**affles Factory Installed
S1 = Sleeve & Architectural Grill
S2 = Sleeve & Stamped AL Grill

| Package Terminal Air Conditioner | |
|---|---|
| Model/Revision | Description |
| PT********** AA | Redesign unit with 2 fan motors and R410A refrigerant |
| PT********** AC | 2 Speed Condenser Fan Motor |
| PT********** BA | M70 Control Board |
| PT********** EA | Release of units with low displacement compressor 7 and 12 K HP PTAC models. Only for standard models and high efficiency models |
| PT********** GA | Transition from Fayetteville to Houston built product |

| Model[1,6,8,9] | PMC073J00AXXX | PMC093J00AXXX | PMC123J00AXXX | PMC153J00AXXX |
|---|---|---|---|---|
| Voltage[1,3] | 230/208 | 230/208 | 230/208 | 230/208 |
| Capacity (BTU/h) | 6,800/6,700 | 9,000/8,700 | 11,800/11,700 | 14,500/14,400 |
| Amps [10] | 3.2/3.2 | 4.3/4.3 | 6.0/6.0 | 7.1/7.1 |
| Watts [10] | 565/550 | 775/760 | 1,070/1,060 | 1,460/1,450 |
| EER | 12.0/12.1 | 11.6/11.4 | 11.0/11.0 | 9.9/9.9 |
| Kit Fresh Air, CFM | 25-35 | 25-35 | 25-35 | 25-35 |
| Kit Dehumidifier (Oz/Hr) | 5 | 5 | 5 | 5 |

| Model[1,6,8,9] | PMC073K00AXXX | PMC093K00AXXX | PMC123K00AXXX | PMC153K00AXXX |
|---|---|---|---|---|
| Voltage[1,3] | 230/208 | 230/208 | 230/208 | 230/208 |
| Capacity (BTU/h) | 6,800/6,700 | 9,000/8,700 | 11,800/11,700 | 14,500/14,400 |
| Amps [10] | 3.2/3.2 | 4.3/4.3 | 6.0/6.0 | 7.1/7.1 |
| Watts [10] | 565/550 | 775/760 | 1,070/1,060 | 1,460/1,450 |
| EER | 12.0/12.1 | 11.6/11.4 | 11.0/11.0 | 9.9/9.9 |
| Kit Fresh Air, CFM | 25-35 | 25-35 | 25-35 | 25-35 |
| Kit Dehumidifier (Oz/Hr) | 5 | 5 | 5 | 5 |

**NOTES:**

[1] All 265-volt models must use an Amana® brand sub-base (PTSB4**E) or an Amana® brand hard-wire kit (PTPWHWK4).
[2] Minimum Circuit Ampacity (MCA) ratings conform to the National Electric Code; however, local codes should apply. Minimum voltage on 230/208-volt models is 197 volts; maximum is 253 volts.
[3] Minimum voltage on 265-volt models is 239 volts; maximum is 292 volts.
[4] Overcurrent protection for all units without electric heaters is 15 amps. Overcurrent protection on 265-volt models must be cartridge-style time-delay fuses (included and factory-installed on all Amana® brand 265-volt chassis). See heater perform
[5] Heating capacity and efficiency based on unit operation without condensate pump.
[6] Specify two-digit heater kW size to complete model number.
[7] R-410A / R32 refrigerant used in all systems. R-134A used in Kit Fresh Air.
[8] All units meet or exceed ASHRAE 90.1 standards.
[9] All units less than 250 volts have a Leak Current Detector Interrupter (LCDI) power cord and meet UL 484 standards.
[10] Refer to electric heat performance data for total MCA and recommended overcurrent protection. Amps and Watts notation refers to compressor only.

**EER -** Energy Efficiency Ratio per The Air-Conditioning, Heating, and Refrigeration Institute (AHRI) Test Procedures and Canadian Standards Association (CSA) Test Procedures.

**COP -** Coefficient of Performance per AHRI Test Procedures

# SPECIFICATIONS PTC J/K SERIES

| Model [1,7,9,10] | | PTC073J00AXXX | PTC074J00AXXX | PTC093J00AXXX | PTC094J00AXXX | PTC123J00AXXX | PTC124J00AXXX | PTC153J00AXXX | PTC154J00AXXX |
|---|---|---|---|---|---|---|---|---|---|
| Voltage [1,3] | | 230/208 | 265 | 230/208 | 265 | 230/208 | 265 | 230/208 | 265 |
| Capacity (BTU/h) | | 7,000/7,000 | 7,000 | 9,200/9,000 | 9,200 | 11,900/11,600 | 11,800 | 14,800/14,500 | 14,800 |
| Amps [11] | | 3.1/3.1 | 2.7 | 4.1/4.1 | 3.6 | 6.1/6.1 | 4.8 | 7.0/7.0 | 6.1 |
| Watts [11] | | 580/560 | 585 | 790/765 | 805 | 1,080/1,060 | 1,170 | 1,480/1,450 | 1,480 |
| EER | | 12.8/12.8 | 13 | 12.2/12.1 | 11.9 | 11.5/11.4 | 11.2 | 10.4/10.3 | 10.7 |
| Unit without Electric Heater | | | | | | | | | |
| Min. Circuit Amps [2,5,11] | | 3.7 | 3.2 | 4.9 | 4.4 | 7.4 | 5.8 | 8.5 | 7.4 |
| CFM (Cool/Wet Coil) | High | 330 | 330 | 290 | 290 | 330 | 330 | 400 | 400 |
| | Low | 245 | 245 | 264 | 264 | 245 | 245 | 314 | 314 |
| CFM (Dry) | High | 360 | 370 | 310 | 310 | 370 | 370 | 360 | 360 |
| | Low | 270 | 270 | 282 | 282 | 270 | 270 | 332 | 332 |
| Ventilated Air, CFM (Fan Only)** | | 40* | 65* | 65** | 65** | 40* | 40** | 65** | 65** |
| Dehumidifaction (Pints/Hr.) | | 1.7 | 1.7 | 2.2 | 2.2 | 1.7 | 1.7 | 4.4 | 4.4 |
| Net Weight (lbs.) | | 106 | 103 | 102 | 102 | 108 | 108 | 113 | 113 |
| Ship Weight (lbs.) | | 115 | 115 | 117 | 117 | 125 | 125 | 130 | 130 |

| Model [1,7,9,10] | | PTC073K00AXXX | PTC074K00AXXX | PTC093K00AXXX | PTC094K00AXXX | PTC123K00AXXX | PTC124K00AXXX | PTC153K00AXXX | PTC154K00AXXX |
|---|---|---|---|---|---|---|---|---|---|
| Voltage [1,3] | | 230/208 | 265 | 230/208 | 265 | 230/208 | 265 | 230/208 | 265 |
| Capacity (BTU/h) | | 7,000/7,000 | 7,000 | 9,200/9,000 | 9,200 | 11,900/11,600 | 11,800 | 14,800/14,500 | 14,800 |
| Amps [11] | | 3.1/3.1 | 2.8 | 4.2/4.2 | 3.6 | 6.1/6.1 | 4.9 | 7.1/7.1 | 6.2 |
| Watts [11] | | 580/560 | 585 | 790/765 | 810 | 1,080/1,060 | 1,170 | 1,480/1,450 | 1,480 |
| EER | | 12.0/12.4 | 11.9 | 11.6/11.7 | 11.3 | 11.0/11.0 | 10.7 | 10.0/10.0 | 10 |
| Unit without Electric Heater | | | | | | | | | |
| Min. Circuit Amps [2,5,11] | | 3.7 | 3.2 | 4.9 | 4.4 | 7.4 | 5.8 | 8.5 | 7.4 |
| CFM (Cool/Wet Coil) | High | 330 | 340 | 330 | 330 | 330 | 330 | 400 | 400 |
| | Low | 245 | 245 | 264 | 264 | 245 | 245 | 314 | 314 |
| CFM (Dry) | High | 360 | 360 | 310 | 310 | 360 | 360 | 400 | 400 |
| | Low | 270 | 270 | 282 | 282 | 270 | 270 | 332 | 332 |
| Ventilated Air, CFM (Fan Only)** | | 40* | 65* | 65** | 65** | 40* | 40** | 65** | 65** |
| Dehumidifaction (Pints/Hr.) | | 1.7 | 1.7 | 2.2 | 2.2 | 1.7 | 1.7 | 4.4 | 4.4 |
| Net Weight (lbs.) | | 106 | 103 | 102 | 102 | 108 | 108 | 113 | 113 |
| Ship Weight (lbs.) | | 115 | 115 | 117 | 117 | 125 | 125 | 130 | 130 |

* INFORMATION IN THIS MANUAL APPLIES ONLY TO THE BA REVISION OF 0902G*** MODEL.
** ACTUAL VENT CFM PERFORMANCE WILL VARY DUE TO APPLICATION AND INSTALLATION CONDITIONS.

**NOTES:**

1 All 265-volt models must use an Amana® brand sub-base (PTSB4**E) or an Amana® brand hard-wire kit (PTPWHWK4).
2 Minimum Circuit Ampacity (MCA) ratings conform to the National Electric Code; however, local codes should apply. Minimum voltage on 230/208-volt models is 197 volts; maximum is 253 volts.
3 Minimum voltage on 265-volt models is 239 volts; maximum is 292 volts.
4 Minimum voltage on 115-volt models is 104 volts; maximum is 127 volts.
5 Overcurrent protection for all units without electric heaters is 15 amps. Overcurrent protection on 265-volt models must be cartridge-style time-delay fuses (included and factory-installed on all Amana® brand 265-volt chassis). See heater perform
6 Heating capacity and efficiency based on unit operation without condensate pump.
7 Specify two-digit heater kW size to complete model number.
8 R-410A / R32 refrigerant used in all systems.
9 All units meet or exceed ASHRAE 90.1 standards.
10 All units less than 250 volts have a Leak Current Detector Interrupter (LCDI) power cord and meet UL 484 standards.
11 Refer to electric heat performance data for total MCA and recommended overcurrent protection. Amps and Watts notation refers to compressor only.

**EER -** Energy Efficiency Ratio per The Air-Conditioning, Heating, and Refrigeration Institute (AHRI) Test Procedures and Canadian Standards Association (CSA) Test Procedures.

**COP -** Coefficient of Performance per AHRI Test Procedures

# SPECIFICATIONS HEC J/K SERIES

| Model [1,7,9,10] | | HEC073J00AXXX | HEC074J00AXXX | HEC093J00AXXX | HEC094J00AXXX | HEC123J00AXXX | HEC124J00AXXX | HEC153J00AXXX | HEC154J00AXXX |
|---|---|---|---|---|---|---|---|---|---|
| Voltage [1,3] | | 230/208 | 265 | 230/208 | 265 | 230/208 | 265 | 230/208 | 265 |
| Capacity (BTU/h) | | 7,000/7,000 | 7,000 | 9,200/9,000 | 9,200 | 11,700/11,400 | 11,800 | 14,800/14,500 | 14,800 |
| Amps [11] | | 3.1/3.1 | 2.7 | 4.1/4.1 | 3.6 | 6.1/6.1 | 4.8 | 7.0/7.0 | 6.1 |
| Watts [11] | | 510/505 | 500 | 715/700 | 720 | 980/955 | 1,015 | 1380/1340 | 1,320 |
| EER | | 13.8/13.6 | 12.7 | 12.8/12.8 | 11.9 | 11.9/11.9 | 11.1 | 10.8/10.7 | 10.3 |
| Unit without Electric Heater | | | | | | | | | |
| Min. Circuit Amps [2,5,11] | | 3.7 | 3.2 | 4.9 | 4.4 | 7.4 | 5.8 | 8.5 | 7.4 |
| CFM (Cool/Wet Coil) | High | 330 | 330 | 290 | 290 | 330 | 330 | 400 | 400 |
| | Low | 245 | 245 | 264 | 264 | 245 | 245 | 314 | 314 |
| CFM (Dry) | High | 360 | 370 | 310 | 310 | 370 | 370 | 360 | 360 |
| | Low | 270 | 270 | 282 | 282 | 270 | 270 | 332 | 332 |
| Ventilated Air, CFM (Fan Only)** | | 40* | 65* | 65** | 65** | 40* | 40** | 65** | 65** |
| Dehumidifaction (Pints/Hr.) | | 1.7 | 1.7 | 2.2 | 2.2 | 1.7 | 1.7 | 4.4 | 4.4 |
| Net Weight (lbs.) | | 106 | 103 | 102 | 102 | 108 | 108 | 113 | 113 |
| Ship Weight (lbs.) | | 115 | 115 | 117 | 117 | 125 | 125 | 130 | 130 |

| Model [1,7,9,10] | | HEC073K00AXXX | HEC074K00AXXX | HEC093K00AXXX | HEC094K00AXXX | HEC123K00AXXX | HEC124K00AXXX | HEC153K00AXXX | HEC154K00AXXX |
|---|---|---|---|---|---|---|---|---|---|
| Voltage [1,3] | | 230/208 | 265 | 230/208 | 265 | 230/208 | 265 | 230/208 | 265 |
| Capacity (BTU/h) | | 7,000/7,000 | 7,000 | 9,200/9,000 | 9,200 | 11,700/11,400 | 11,800 | 14,800/14,500 | 14,800 |
| Amps [11] | | 3.1/3.1 | 2.8 | 4.2/4.2 | 3.6 | 6.1/6.1 | 4.9 | 7.1/7.1 | 6.2 |
| Watts [11] | | 520/530 | 550 | 760/735 | 770 | 1025/990 | 1,060 | 1435/1405 | 1,435 |
| EER | | 13 | 11.9 | 11.6/11.7 | 11.3 | 11.0/11.0 | 10.7 | 10.0/10.0 | 10 |
| Unit without Electric Heater | | | | | | | | | |
| Min. Circuit Amps [2,5,11] | | 3.7 | 3.2 | 4.9 | 4.4 | 7.4 | 5.8 | 8.5 | 7.4 |
| CFM (Cool/Wet Coil) | High | 330 | 340 | 330 | 330 | 330 | 330 | 400 | 400 |
| | Low | 245 | 245 | 264 | 264 | 245 | 245 | 314 | 314 |
| CFM (Dry) | High | 360 | 360 | 310 | 310 | 360 | 360 | 400 | 400 |
| | Low | 270 | 270 | 282 | 282 | 270 | 270 | 332 | 332 |
| Ventilated Air, CFM (Fan Only)** | | 40* | 65* | 65** | 65** | 40* | 40** | 65** | 65** |
| Dehumidifaction (Pints/Hr.) | | 1.7 | 1.7 | 2.2 | 2.2 | 1.7 | 1.7 | 4.4 | 4.4 |
| Net Weight (lbs.) | | 106 | 103 | 102 | 102 | 108 | 108 | 113 | 113 |
| Ship Weight (lbs.) | | 115 | 115 | 117 | 117 | 125 | 125 | 130 | 130 |

* INFORMATION IN THIS MANUAL APPLIES ONLY TO THE BA REVISION OF 0902G*** MODEL.
** ACTUAL VENT CFM PERFORMANCE WILL VARY DUE TO APPLICATION AND INSTALLATION CONDITIONS.

**NOTES:**

1 All 265-volt models must use an Amana® brand sub-base (PTSB4**E) or an Amana® brand hard-wire kit (PTPWHWK4).
2 Minimum Circuit Ampacity (MCA) ratings conform to the National Electric Code; however, local codes should apply. Minimum voltage on 230/208-volt models is 197 volts; maximum is 253 volts.
3 Minimum voltage on 265-volt models is 239 volts; maximum is 292 volts.
4 Minimum voltage on 115-volt models is 104 volts; maximum is 127 volts.
5 Overcurrent protection for all units without electric heaters is 15 amps. Overcurrent protection on 265-volt models must be cartridge-style time-delay fuses (included and factory-installed on all Amana® brand 265-volt chassis). See heater perform
6 Heating capacity and efficiency based on unit operation without condensate pump.
7 Specify two-digit heater kW size to complete model number.
8 R-410A / R32 refrigerant used in all systems.
9 All units meet or exceed ASHRAE 90.1 standards.
10 All units less than 250 volts have a Leak Current Detector Interrupter (LCDI) power cord and meet UL 484 standards.
11 Refer to electric heat performance data for total MCA and recommended overcurrent protection. Amps and Watts notation refers to compressor only.

**EER -** Energy Efficiency Ratio per The Air-Conditioning, Heating, and Refrigeration Institute (AHRI) Test Procedures and Canadian Standards Association (CSA) Test Procedures.

**COP -** Coefficient of Performance per AHRI Test Procedures

# SPECIFICATIONS PTH J/K SERIES

| Model [1,7,9,10] | | PTH073J00AXXX | PTH074J00AXXX | PTH093J00AXXX | PTH094J00AXXX | PTH123J00AXXX | PTH124J00AXXX | PTH153J00AXXX | PTH154J00AXXX |
|---|---|---|---|---|---|---|---|---|---|
| COOLING | | | | | | | | | |
| Voltage [1,3] | | 230/208 | 265 | 230/208 | 265 | 230/208 | 265 | 230/208 | 265 |
| Capacity (BTU/h) | | 7,100/7,000 | 7,300 | 9,000/9,000 | 9,000 | 12,000/11,600 | 12,000 | 14,600/14,400 | 14,600 |
| Amps [11] | | 3.2 | 2.8 | 4 | 3.5 | 5.6 | 4.9 | 7.1 | 6.6 |
| Watts [11] | | 570/545 | 585 | 725/720 | 725 | 1,040/1,005 | 1,060 | 1,400/1,355 | 1,405 |
| EER | | 12.4/12.8 | 12.5 | 12.4/12.5 | 12.4 | 11.5/11.5 | 11.3 | 10.4/10.6 | 10.4 |
| HEATING | | | | | | | | | |
| Capacity (BTU/h) | | 6,300/6,100 | 6,500 | 8,200/8,000 | 8,200 | 11,000/10,800 | 11,500 | 14,300/14,000 | 14,100 |
| Amps [11] | | 3.2 | 2.8 | 4 | 3.5 | 5.6 | 4.9 | 7.1 | 6.6 |
| Watts [11] | | 510/480 | 545 | 665/650 | 685 | 980/1,030 | 1,020 | 1,350/1,320 | 1,375 |
| COP | | 3.6/3.7 | 3.5 | 3.6/3.6 | 3.5 | 3.3/3.3 | 3.3 | 3.1/3.1 | 3 |
| Unit without Electric Heater | | | | | | | | | |
| Min. Circuit Amps [2,5,11] | | 3.7 | 3.2 | 4.9 | 4.4 | 7.4 | 5.8 | 8.5 | 7.4 |
| CFM (Cool/Wet Coil) | High | 330 | 330 | 290 | 290 | 330 | 330 | 400 | 400 |
| | Low | 245 | 245 | 264 | 264 | 245 | 245 | 314 | 314 |
| CFM (Dry) | High | 360 | 370 | 310 | 310 | 370 | 370 | 360 | 360 |
| | Low | 270 | 270 | 282 | 282 | 270 | 270 | 332 | 332 |
| Ventilated Air, CFM (Fan Only)** | | 40* | 65* | 65** | 65** | 40* | 40** | 65** | 65** |
| Dehumidifaction (Pints/Hr.) | | 1.7 | 1.7 | 2.2 | 2.2 | 1.7 | 1.7 | 4.4 | 4.4 |
| Net Weight (lbs.) | | 106 | 103 | 102 | 102 | 108 | 108 | 113 | 113 |
| Ship Weight (lbs.) | | 115 | 115 | 117 | 117 | 125 | 125 | 130 | 130 |

| Model [1,7,9,10] | | PTH073K00AXXX | PTH074K00AXXX | PTH093K00AXXX | PTH094K00AXXX | PTH123K00AXXX | PTH124K00AXXX | PTH153K00AXXX | PTH154K00AXXX |
|---|---|---|---|---|---|---|---|---|---|
| COOLING | | | | | | | | | |
| Voltage [1,3] | | 230/208 | 265 | 230/208 | 265 | 230/208 | 265 | 230/208 | 265 |
| Capacity (BTU/h) | | 7,100/7,000 | 7,300 | 9,000/9,000 | 9,000 | 11,600/11,400 | 11,600 | 14,200/14,000 | 14,200 |
| Amps [11] | | 3.3 | 2.9 | 4.4 | 3.6 | 6.1 | 5.4 | 7.6 | 6.8 |
| Watts [11] | | 590/560 | 615 | 755/750 | 765 | 1,050/1,025 | 1,075 | 1,430/1,410 | 1,450 |
| EER | | 12/12.4 | 11.9 | 11.9/12 | 11.8 | 11/11.1 | 10.8 | 9.9/9.9 | 9.8 |
| HEATING | | | | | | | | | |
| Capacity (BTU/h) | | 6,500/6,400 | 6,800 | 8,200/8,000 | 8,200 | 10,600/10,500 | 10,600 | 13,900/13,700 | 13,700 |
| Amps [11] | | 3.3 | 2.9 | 4.4 | 3.6 | 6.1 | 5.4 | 7.6 | 6.8 |
| Watts [11] | | 560/535 | 585 | 705/685 | 705 | 970/960 | 970 | 1,355/1,335 | 1,340 |
| COP | | 3.4/3.5 | 3.4 | 3.4/3.4 | 3.4 | 3.2/3.2 | 3.2 | 3/3 | 3 |
| Unit without Electric Heater | | | | | | | | | |
| Min. Circuit Amps [2,5,11] | | 3.7 | 3.2 | 4.9 | 4.4 | 7.4 | 5.8 | 8.5 | 7.4 |
| CFM (Cool/Wet Coil) | High | 330 | 340 | 330 | 330 | 330 | 330 | 400 | 400 |
| | Low | 245 | 245 | 264 | 264 | 245 | 245 | 314 | 314 |
| CFM (Dry) | High | 360 | 360 | 310 | 310 | 360 | 360 | 400 | 400 |
| | Low | 270 | 270 | 282 | 282 | 270 | 270 | 332 | 332 |
| Ventilated Air, CFM (Fan Only)** | | 40* | 65* | 65** | 65** | 40* | 40** | 65** | 65** |
| Dehumidifaction (Pints/Hr.) | | 1.7 | 1.7 | 2.2 | 2.2 | 1.7 | 1.7 | 4.4 | 4.4 |
| Net Weight (lbs.) | | 106 | 103 | 102 | 102 | 108 | 108 | 113 | 113 |
| Ship Weight (lbs.) | | 115 | 115 | 117 | 117 | 125 | 125 | 130 | 130 |

* INFORMATION IN THIS MANUAL APPLIES ONLY TO THE BA REVISION OF 0902G*** MODEL.
** ACTUAL VENT CFM PERFORMANCE WILL VARY DUE TO APPLICATION AND INSTALLATION CONDITIONS.

**NOTES:**

1. All 265-volt models must use an Amana® brand sub-base (PTSB4**E) or an Amana® brand hard-wire kit (PTPWHWK4).
2. Minimum Circuit Ampacity (MCA) ratings conform to the National Electric Code; however, local codes should apply. Minimum voltage on 230/208-volt models is 197 volts; maximum is 253 volts.
3. Minimum voltage on 265-volt models is 239 volts; maximum is 292 volts.
4. Minimum voltage on 115-volt models is 104 volts; maximum is 127 volts.
5. Overcurrent protection for all units without electric heaters is 15 amps. Overcurrent protection on 265-volt models must be cartridge-style time-delay fuses (included and factory-installed on all Amana® brand 265-volt chassis). See heater perform
6. Heating capacity and efficiency based on unit operation without condensate pump.
7. Specify two-digit heater kW size to complete model number.
8. R-410A / R32 refrigerant used in all systems.
9. All units meet or exceed ASHRAE 90.1 standards.
10. All units less than 250 volts have a Leak Current Detector Interrupter (LCDI) power cord and meet UL 484 standards.
11. Refer to electric heat performance data for total MCA and recommended overcurrent protection. Amps and Watts notation refers to compressor only.

**EER -** Energy Efficiency Ratio per The Air-Conditioning, Heating, and Refrigeration Institute (AHRI) Test Procedures and Canadian Standards Association (CSA) Test Procedures.

**COP -** Coefficient of Performance per AHRI Test Procedures

# SPECIFICATIONS HEH J/K SERIES

| Model [1,7,9,10] | | HEH073J00AXXX | HEH074J00AXXX | HEH093J00AXXX | HEH094J00AXXX | HEH123J00AXXX | HEH124J00AXXX | HEH153J00AXXX |
|---|---|---|---|---|---|---|---|---|
| COOLING | | | | | | | | |
| Voltage [1,3] | | 230/208 | 265 | 230/208 | 265 | 230/208 | 265 | 230/208 |
| Capacity (BTU/h) | | 7,100/7,100 | 7,300 | 9,000/9,000 | 9,100 | 12,000/11,600 | 12,100 | 14,500/14,400 |
| Amps [11] | | 3 | 2.7 | 3.9 | 3.35 | 5.4 | 4.7 | 6.7 |
| Watts [11] | | 530/515 | 550 | 690/680 | 700 | 1,015/965 | 1,045 | 1,355/1,305 |
| EER | | 13.3/13.7 | 13.3 | 13/13.2 | 13 | 11.8/12 | 11.6 | 10.7/11 |
| HEATING | | | | | | | | |
| Capacity (BTU/h) | | 6,300/6,100 | 6,600 | 8,200/8,000 | 8,300 | 11,100/10,900 | 11,600 | 14,400/14200 |
| Amps [11] | | 3 | 2.7 | 3.9 | 3.35 | 5.4 | 4.7 | 6.7 |
| Watts [11] | | 470/455 | 495 | 615/600 | 640 | 955/935 | 1,000 | 1,315/1,300 |
| COP | | 3.9/3.9 | 3.9 | 3.9/3.9 | 3.8 | 3.4/3.4 | 3.4 | 3.2/3.2 |
| Unit without Electric Heater | | | | | | | | |
| Min. Circuit Amps [2,5,11] | | 3.7 | 3.2 | 4.9 | 4.4 | 7.4 | 5.8 | 8.5 |
| CFM (Cool/Wet Coil) | High | 330 | 330 | 290 | 290 | 330 | 330 | 400 |
| | Low | 245 | 245 | 264 | 264 | 245 | 245 | 314 |
| CFM (Dry) | High | 360 | 370 | 310 | 310 | 370 | 370 | 360 |
| | Low | 270 | 270 | 282 | 282 | 270 | 270 | 332 |
| Ventilated Air, CFM (Fan Only)** | | 40* | 65* | 65** | 65** | 40* | 40** | 65** |
| Dehumidifaction (Pints/Hr.) | | 1.7 | 1.7 | 2.2 | 2.2 | 1.7 | 1.7 | 4.4 |
| Net Weight (lbs.) | | 106 | 103 | 102 | 102 | 108 | 108 | 113 |
| Ship Weight (lbs.) | | 115 | 115 | 117 | 117 | 125 | 125 | 130 |

| Model [1,7,9,10] | | HEH073K00AXXX | HECH74K00AXXX | HEH093K00AXXX | HEH094K00AXXX | HEH123K00AXXX | HEH124K00AXXX | HEH153K00AXXX |
|---|---|---|---|---|---|---|---|---|
| COOLING | | | | | | | | |
| Voltage [1,3] | | 230/208 | 265 | 230/208 | 265 | 230/208 | 265 | 230/208 |
| Capacity (BTU/h) | | 7,100/7100 | 7,200 | 9,000/9,000 | 9,100 | 11,600/11,400 | 11,600 | 14,200/14,000 |
| Amps [11] | | 3.1 | 2.9 | 4.3 | 3.5 | 5.8 | 5.2 | 7.2 |
| Watts [11] | | 545/530 | 575 | 720/705 | 745 | 1,005/990 | 1,065 | 1,390/1,370 |
| EER | | 13/13.3 | 12.5 | 12.5/12.7 | 12.2 | 11.5/11.5 | 10.9 | 10.2/10.2 |
| HEATING | | | | | | | | |
| Capacity (BTU/h) | | 6,500/6,400 | 6,800 | 8,200/8,000 | 8,300 | 10,600/10,500 | 10,600 | 13,900/13,700 |
| Amps [11] | | 3.1 | 2.9 | 4.3 | 3.5 | 5.8 | 5.2 | 7.2 |
| Watts [11] | | 510/490 | 555 | 665/650 | 695 | 940/930 | 940 | 1,310/1,295 |
| COP | | 3.7/3.8 | 3.6 | 3.6/3.6 | 3.5 | 3.3/3.3 | 3.3 | 3.1/3.1 |
| Unit without Electric Heater | | | | | | | | |
| Min. Circuit Amps [2,5,11] | | 3.7 | 3.2 | 4.9 | 4.4 | 7.4 | 5.8 | 8.5 |
| CFM (Cool/Wet Coil) | High | 330 | 340 | 330 | 330 | 330 | 330 | 400 |
| | Low | 245 | 245 | 264 | 264 | 245 | 245 | 314 |
| CFM (Dry) | High | 360 | 360 | 310 | 310 | 360 | 360 | 400 |
| | Low | 270 | 270 | 282 | 282 | 270 | 270 | 332 |
| Ventilated Air, CFM (Fan Only)** | | 40* | 65* | 65** | 65** | 40* | 40** | 65** |
| Dehumidifaction (Pints/Hr.) | | 1.7 | 1.7 | 2.2 | 2.2 | 1.7 | 1.7 | 4.4 |
| Net Weight (lbs.) | | 106 | 103 | 102 | 102 | 108 | 108 | 113 |
| Ship Weight (lbs.) | | 115 | 115 | 117 | 117 | 125 | 125 | 130 |

**NOTES:**

1 All 265-volt models must use an Amana® brand sub-base (PTSB4**E) or an Amana® brand hard-wire kit (PTPWHWK4).
2 Minimum Circuit Ampacity (MCA) ratings conform to the National Electric Code; however, local codes should apply. Minimum voltage on 230/208-volt models is 197 volts; maximum is 253 volts.
3 Minimum voltage on 265-volt models is 239 volts; maximum is 292 volts.
4 Overcurrent protection for all units without electric heaters is 15 amps. Overcurrent protection on 265-volt models must be cartridge-style time-delay fuses (included and factory-installed on all Amana® brand 265-volt chassis). See heater perform
5 Heating capacity and efficiency based on unit operation without condensate pump.
6 Specify two-digit heater kW size to complete model number.
7 R-410A / R32 refrigerant used in all systems. R-134A used in Kit Fresh Air.
8 All units meet or exceed ASHRAE 90.1 standards.
9 All units less than 250 volts have a Leak Current Detector Interrupter (LCDI) power cord and meet UL 484 standards.
10 Refer to electric heat performance data for total MCA and recommended overcurrent protection. Amps and Watts notation refers to compressor only.

**EER** - Energy Efficiency Ratio per The Air-Conditioning, Heating, and Refrigeration Institute (AHRI) Test Procedures and Canadian Standards Association (CSA) Test Procedures.

**COP** - Coefficient of Performance per AHRI Test Procedures

# SPECIFICATIONS PMH J/K SERIES

| COOLING | | | | | | |
|---|---|---|---|---|---|---|
| Model[1,6,8,9] | PMH073J00AXXX | PMH074J00AXXX | PMH093J00AXXX | PMH094J00AXXX | PMH123J00AXXX | PMH153J00AXXX |
| Voltage[1,3] | 230/208 | 265 | 230/208 | 265 | 230/208 | 230/208 |
| Capacity (BTU/h) | 6,900/6,700 | 7,700 | 8,700/8,700 | 9,000 | 11,400/11,200 | 14,400/14,200 |
| Amps [10] | 3 | 2.7 | 3.9 | 3.4 | 5.3 | 6.7 |
| Watts [10] | 580/555 | 655 | 740/735 | 780 | 1,055/1,015 | 1,455/1,430 |
| EER | 11.9/12 | 11.7 | 11.7/11.8 | 11.6 | 10.8/11 | 9.9/9.9 |
| HEATING | | | | | | |
| Capacity (BTU/h) | 6,200/6,100 | 6,500 | 7,800/7,600 | 8,000 | 10,600/10,400 | 13,900/13,700 |
| Amps [10] | 3 | 2.7 | 3.9 | 3.4 | 5.3 | 6.7 |
| Watts [10] | 560/535 | 585 | 705/685 | 705 | 970/960 | 1,355/1,335 |
| COP | 3.4/3.4 | 3.3 | 3.4/3.4 | 3.3 | 3.1/3.1 | 3/3 |
| Kit Fresh Air, CFM | 25-35 | 25-35 | 25-35 | 25-35 | 25-35 | 25-35 |
| Kit Dehumidifier (Oz/Hr) | 5 | 5 | 5 | 5 | 5 | 5 |

| COOLING | | | | | | |
|---|---|---|---|---|---|---|
| Model[1,6,8,9] | PMH073K00AXXX | PMH074K00AXXX | PMH093K00AXXX | PMH094K00AXXX | PMH123K00AXXX | PMH153K00AXXX |
| Voltage[1,3] | 230/208 | 265 | 230/208 | 265 | 230/208 | 230/208 |
| Capacity (BTU/h) | 6,900/6,700 | 7,700 | 8,700/8,700 | 9,000 | 11,400/11,200 | 14,400/14,200 |
| Amps [10] | 3.2 | 2.8 | 4.2 | 3.5 | 5.8 | 7.2 |
| Watts [10] | 580/535 | 655 | 740/735 | 780 | 1,055/1,015 | 1,455/1,430 |
| EER | 11.9/12 | 11.7 | 11.7/11.8 | 11.6 | 10.8/11 | 9.9/9.9 |
| HEATING | | | | | | |
| Capacity (BTU/h) | 6,200/6,100 | 6,700 | 7,800/7,600 | 8,000 | 10,600/10,400 | 13,900/13,700 |
| Amps [10] | 3.2 | 2.8 | 4.2 | 3.5 | 5.8 | 7.2 |
| Watts [10] | 560/535 | 585 | 705/685 | 705 | 970/960 | 1,355/1,335 |
| COP | 3.4/3.4 | 3.3 | 3.4/3.4 | 3.3 | 3.1/3.1 | 3/3 |
| Kit Fresh Air, CFM | 25-35 | 25-35 | 25-35 | 25-35 | 25-35 | 25-35 |
| Kit Dehumidifier (Oz/Hr) | 5 | 5 | 5 | 5 | 5 | 5 |

**NOTES:**

1 All 265-volt models must use an Amana® brand sub-base (PTSB4**E) or an Amana® brand hard-wire kit (PTPWHWK4).
2 Minimum Circuit Ampacity (MCA) ratings conform to the National Electric Code; however, local codes should apply. Minimum voltage on 230/208-volt models is 197 volts; maximum is 253 volts.
3 Minimum voltage on 265-volt models is 239 volts; maximum is 292 volts.
4 Overcurrent protection for all units without electric heaters is 15 amps. Overcurrent protection on 265-volt models must be cartridge-style time-delay fuses (included and factory-installed on all Amana® brand 265-volt chassis). See heater perform
5 Heating capacity and efficiency based on unit operation without condensate pump.
6 Specify two-digit heater kW size to complete model number.
7 R-410A / R32 refrigerant used in all systems. R-134A used in Kit Fresh Air.
8 All units meet or exceed ASHRAE 90.1 standards.
9 All units less than 250 volts have a Leak Current Detector Interrupter (LCDI) power cord and meet UL 484 standards.
10 Refer to electric heat performance data for total MCA and recommended overcurrent protection. Amps and Watts notation refers to compressor only.

**EER -** Energy Efficiency Ratio per The Air-Conditioning, Heating, and Refrigeration Institute (AHRI) Test Procedures and Canadian Standards Association (CSA) Test Procedures.

**COP -** Coefficient of Performance per AHRI Test Procedures

# SPECIFICATIONS

# PTH J/K SERIES
# HEH J/K SERIES
# PMH & PMC SERIES

| Voltage | Electric Heater Size (Kw) | No. of Stage | Nominal Heating (Btu/h) | | | Total Watts | Total Amps | Min. Circuit Ampacity | MOD (amps) | Power Cord |
|---|---|---|---|---|---|---|---|---|---|---|
| | | | @230V | @208V | @265V | | | | | |
| 230/208V | 2.5 | 1 | 8,500 | 7,000 | -- | 2,500/2,040 | 10.9/9.83 | 14.1 | 15 | 6 -15 P |
| 230/208V | 3.5 | 1 | 11,900 | 9,800 | -- | 3,500/2,860 | 15.2/13.8 | 19.5 | 20 | 6 -20 P |
| 230/208V | 5 | 1 | 17,100 | 14,000 | -- | 5,000/4,085 | 21.7/19.7 | 27.6 | 25 | 6 - 25 P |
| 265V | 2.5 | 1 | -- | -- | 8,500 | 2,500 | 9.4 | 12.2 | 15 | 7 - 20 P |
| 265V | 3.7 | 1 | -- | -- | 12,600 | 3,700 | 14 | 17.9 | 20 | 7 - 20 P |
| 265V | 5 | 1 | -- | -- | 17,100 | 5,000 | 18.9 | 23.9 | 25 | 7 - 30 P |

**NOTES:**

[1] All 265-volt models must use an Amana® brand sub-base (PTSB4**E) or an Amana® brand hard-wire kit (PTPWHWK4).
[2] Minimum branch circuit ampacity ratings conform to the National Electric Code; however, local codes should apply.
[3] Minimum voltage on 230/208-volt models is 197 volts; maximum is 253 volts.
Minimum voltage on 265-volt models is 239 volts; maximum is 292 volts.
[4] Overcurrent protection for all units without electric heaters is 15 amps. Overcurrent protection on 265-volt models must be cartridge-style time-delay fuses (included and factory-installed on all Amana® brand 265-volt chassis).
[5] Heating capacity and efficiency based on unit operation without condensate pump.
[6] Total watts for 15,000 BTU/h models; subtract 20 watts for PT07/09/12
[7] Specify two-digit heater kW size to complete model number.
[8] R-410A / R32 refrigerant used in all systems.
[9] All units meet or exceed ASHRAE 90.1 standards.
[10] All units less than 250 volts have a Leak Current Detector Interrupter (LCDI) power cord and meet UL 484 standards.

**EER -** Energy Efficiency Ratio per The Air-Conditioning, Heating, and Refrigeration Institute (AHRI) Test Procedures and Canadian Standards Association (CSA) Test Procedures.

**COP -** Coefficient of Performance per AHRI Test Procedures

# VOLTAGE REQUIREMENTS

## OPERATING VOLTAGES

Use a voltmeter, check the voltage at the outlet.
The reading must be within the minimums and maximums shown below for the operating voltage.

| Operating Voltages | | |
|---|---|---|
| **Unit Voltage** | **Voltage Utilization Range** | |
| **Rating** | **Minimum Voltage** | **Maximum Voltage** |
| 115 | 104 | 127 |
| 230/208 | 197 | 253 |
| 265 | 238 | 292 |

- LCDI or AFCI Power Cords - Underwrites Laboratories and the National Electric Code (NEC) now require power cords that sense current leakage and can open the electrical circuit to the unit on units rated at 250 volts or less. In the event that unit does not operate, check the reset button located on or near the head of the power cord as part of the normal troubleshooting procedure.

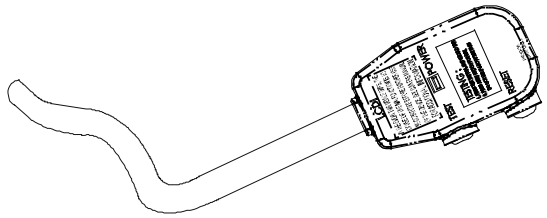

**LCDI POWER CORD**

## IMPORTANT NOTE

Cord connection to a wall socket is not permitted for 265-volt units. All 265-volt units must be hard wired using the hard wire kit or make use of the plug-in receptacle in the standard subbase.

## SEQUENCE OF OPERATION

## COOLING MODE

To set unit to the Cool mode, select your temperature and fan speed. If you select Auto the fan speed will automatically switch between LOW and HIGH based on the temperature of the room and the set point. If temperature is more than 5 degrees higher than the set point the fan will come on in HIGH and then switch to LOW when the room temperature is within 5 degrees of the set point.
Once you have selected COOL, the desired temperature and the FAN selection, the fan will come on first and then the compressor will come on approximately 2 seconds later. When the room temperature has reached the desired set point the compressor will shut off and the fan will continue to run for approximately 30 seconds and then will shut off.

## HEATING MODE

If the model is a PTC** the unit is an electric heat only unit which means the fan and electric heating element will be the only things that will operate in the heating mode.
To set unit to the heat mode, select your temperature and fan speed selection. If you select Auto the fan speed will automatically switch between LOW and HIGH based on the temperature of the room and the set point. If temperature is more than 5 degrees higher than the set point the fan will come on in HIGH and then switch to LOW when the room temperature is within 5 degrees of the set point.
Once you have selected the HEAT, the desired temperature and the FAN selection, the fan and the electric heat strip will come on. When the room temperature has reached the desired set point the electric heat strip will shut off and the fan will continue to run for approximately 30 seconds and then shut off.

## HEAT MODE

If the model is a PTH** the unit is a heat pump and will operate in electric heat or reverse cycle heat pump mode.
To set the unit for heat mode press the HEAT button on the touch pad and then press the + Plus or -Minus buttons to set the desired temperature, and press the fan speed button to select LOW, HIGH or Auto. If you select Auto the fan speed will automatically switch between LOW and HIGH based on the temperature of the room and the set point. If temperature is more than 5 degrees higher than the set point the fan will come on in HIGH and then switch to LOW when the room temperature is within 5 degrees of the set point.
Once you have selected the HEAT, the desired temperature and the FAN selection, the temperature of the room, the outdoor ambient temperature and the desired set point will determine if the unit will come on in electric heat or heat pump and bring on the compressor. The room temperature will need to be within 4 degrees of the unit's set point for the compressor to come on in the heat pump mode. If the room temperature is more than 4 degrees higher than the set point the unit will come on in electric heat only. If the electric heat comes on the unit will remain in electric heat for the complete cycle. When the desired room temperature is reached the unit will cycle of the heat strip and the fan. When the unit cycles back on the unit will bring on the compressor in the heat pump mode and operate with the heat pump. The heat pump will continue to operate until the outdoor coil reaches approximately 27 degrees at which time the outdoor coil thermistor will shut off the compressor and bring the unit back into the electric heat only operation. The outdoor coil thermistor will keep the heat pump locked out until the thermistor is seeing an outdoor coil temperature of above 33 degrees. Once above 33 degrees the unit will return to heat pump operation on the next call for heat.

When the room temperature has reached the desired set point, electric heat or compressor will shut off and the fan will continue to run for approximately 30 seconds and then shut off.

# SYSTEM OPERATION

**NOTE:**
The heat pump and electric heat DO NOT operate together, it is either in electric heat or heat pump mode.

### CONTROL BOARD CHARACTERISTICS

- Automatic 3-minute Compressor Lockout - After the compressor cycles off, it will not restart for three minutes. This feature is enabled in standard or remote thermostat control.
- Compressor lock-in feature - Whenever the compressor is switched from off to on because the room temperature has risen above or fallen below the specified limit it will remain on for at least four minutes. However, if the thermostat point is changed during the four minutes this lock in feature is overridden.
- Automatic 2nd Stage Electric Heat (Heat Pump Models) - If the room temperature falls to 4°F below the set point temperature, the reverse cycle heat pump is shut off and the strip heat is turned on.
- Automatic Freeze Protection - Whenever power is supplied to the unit and the master switch is in the ON position, automatic freeze protection is active. If the thermistor senses temperature below 40°F+/-5°F, the fan motor and electric strip heat (or hydronic heat, if applicable) are switched on. The heater and fan will remain on until the Thermistor senses a temperature of 43°F.
- Remote Thermostats - Always use an approved thermostat supplied by the manufacturer. A wall thermostat that has not been approved by the manufacturer may not work correctly with this unit.
- Remote Functions - All functions are controlled by a wall mounted thermostat.
- Remote Fan - When GL terminal is connected to R terminal the remote fan speed is switched to low. GH terminal connected to the R terminal fan speed is switched to high.
- Fuse Protection - The fuse protection has been maximized on the 24 volt circuit so accidental groundings of the external terminals will not result in a burned out board. The unit may be operated in standard mode if the fuse is blown. There will be an auxiliary fuse supplied with the board. It will be attached to the main fuse by a plastic clip. The fuse is a 500 ma fuse. When replacing the fuse always use the correct fuse part #M0804205.
- Random Delay - When the master switch is turned on or power is reapplied to the control, all functionality will be locked out for a random period between two and four minutes, if Y or W inputs are active in remote or the mode switch is set to HI/LO heat or cool. The delay can be avoided if the front desk terminals are closed for more than two seconds, or the mode switch is in the off or fan only position.
- Indoor Ambient Thermistor - The Indoor Ambient Thermistor senses actual room temperature.
- Indoor/Outdoor Coil Thermistors - In the cooling mode, if the compressor is engaged continuously for 20 minutes and the Indoor Coil Thermistor is below 30 degrees the compressor is disengaged until the ICT rises above 45 degrees. The Outdoor Coil Thermistor senses coil temperature which correlates to outdoor air temperature. Heat pump operation can operate as low as 24°F outdoor temperature depending upon humidity conditions and / or the balance point of the system. After defrost is initiated, the compressor remains off for at least thirty minutes and resumes operation when the outdoor coil temperature reaches 33°F. Electric resistance heat will maintain the ambient room temperature anytime the temperature falls 4°F below the room set point temperature.
- Load Shedding - The IN & COM terminals are used for load shedding. A switch can be added to close the circuit to lock out the compressor and electric heat when the power company or energy management system is trying to reduce its load for a specified time.
- Sample Before Start - The SBS routine is used in the cooling mode. This routine runs the unit fan on low speed for up to 120 seconds. The sample fan is aborted if compressor demand is detected. To avoid unnecessary sampling the period between samples will be based on specific room conditions. The default sample before start period after a power up is 5 minutes. The period is corrected every time a sample run is completed without a compressor demand. The minimum sample period is 5 minutes and the maximum period is 15 minutes.
- Front Desk Control - The front desk control terminals are IN and COM. These terminals will provide a connection for a user supplied switch that will allow the operation of the unit to be remotely defeated.
- Transfer Fan - A transfer fan may be used if a user supplied relay is connected to IN and COM. Make sure the relay is a manufactured approved relay. The relay will be energized whenever the blower/fan relay is energized.
- Emergency Hydronic Heat - A switch can be added to the IN & COM terminals to close the circuit to enable the fan, enable the heater relay and lockout the compressor to continue minimum operations with auxiliary power, if the main power goes out.

## OPERATING CONTROLS

### USERS CONTROLS

The unit will be controlled by a Wired Wall Thermostat or the Amana® Brand Wireless Thermostat.

# SYSTEM OPERATION

## USING THE AMANA® BRAND APP TO SET UP YOUR USER CONTROLS

**Where to get the app?**

You can find our app in the Google Play Store and in the Apple App Store® by simply searching for Amana® Brand PTAC. Alternatively, you can use your phone's camera to scan one of the below QR codes that will take you to directly to the app.

**For Android**
**https://play.google.com/store/search?q=Amana%20PTAC&c=apps**

**For iOS**
**https://apps.apple.com/us/app/amana-ptac/id1485904992?platform=iphone**

*Google Play and the Google Play logo are trademarks of Google LLC.*

*App Store is a registered trademark of Apple Inc.*

## PTAC CONNECT APP

### OVERVIEW

PTAC Connect is the mobile app that empowers you to program, via Bluetooth® technology, our new J/K series PTACs. The app is part of the Amana® Brand PTAC suite of apps.

*The Bluetooth® word mark and logos are registered trademarks owned by Bluetooth SIG, Inc., and any use of such marks are under license.*

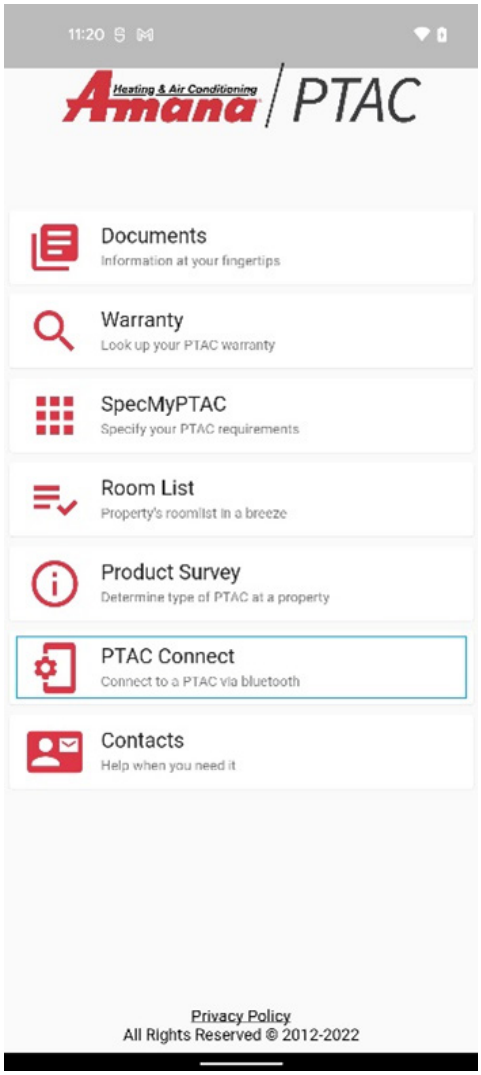

# SYSTEM OPERATION

## MAKING THE CONNECTION

Programming your PTAC starts with connecting the app to the PTAC device. To do so, first select PTAC Connect from the list of Amana® Brand PTAC apps above. A screen with a scan button will appear, shown below as a red button with a magnifying glass. Next, press the physical red button on the PTAC control board, one push, do not hold down, (PTAC control board, under the PTAC front cover and splash guard) then press the scan button in the app.

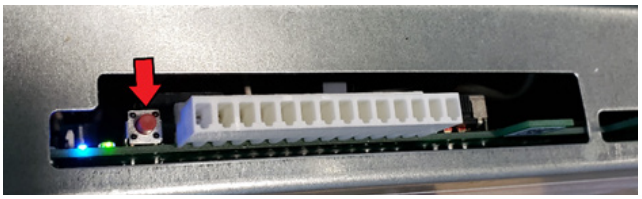

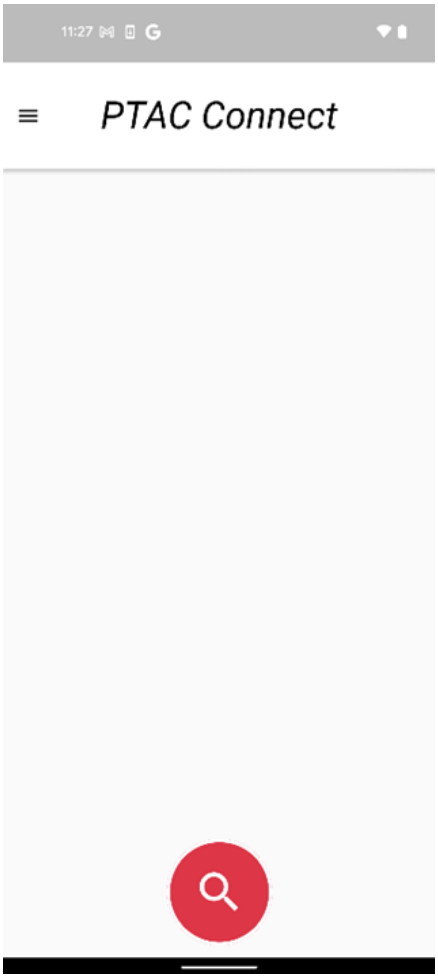


Touching this button will signal the app to scan for all Bluetooth-connectable PTACs. When found the PTAC will be listed showing the serial number as the main identifier to confirm it is the correct unit you wish to pair with.

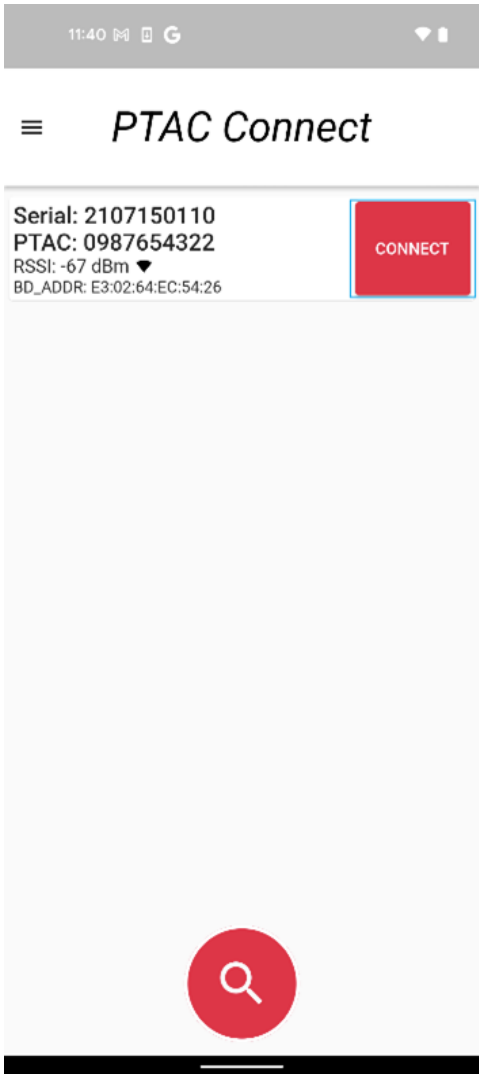


Touching the Connect button next to a desired PTAC on the list will connect the app to the PTAC.

# SYSTEM OPERATION

Once the app is connected to a PTAC, the app's menu accessor ( », upper right corner) will be visible. Touching the menu accessor will show the app's list of all available programming options:

- Dashboard
- Statistics
- Bindings
- Configuration Settings
- Service Board
- Diagnostics
- Notifications

If you have navigated to a screen that is not the app's main Dashboard screen (see the section for programming screens). You will find a red return to dashboard icon under the current screen name as shown below. *You can press this icon at any time to return to the Dashboard.*

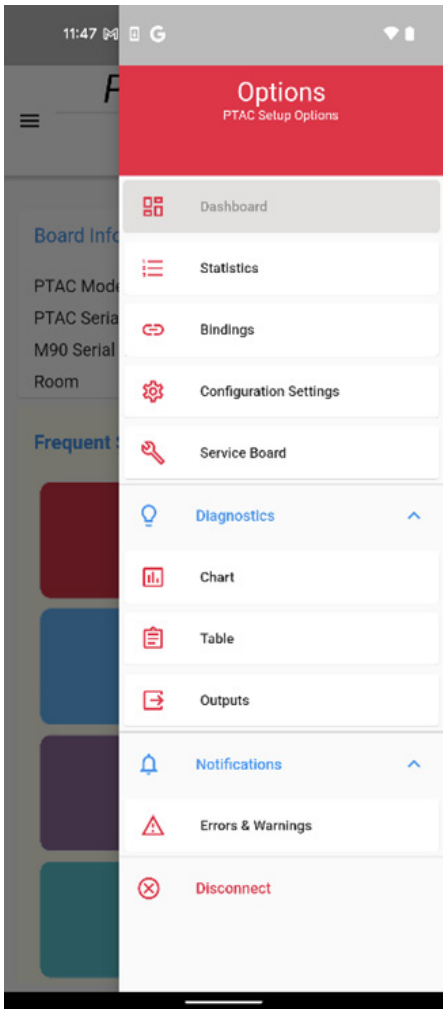

# SYSTEM OPERATION

## THE APP'S PROGRAMMING SCREENS (OR OPTIONS)

### DASHBOARD

The Dashboard contains, among other things, the PTAC's at-a-glance info (Board Info) and the most frequently used PTAC settings (Frequent Settings).

Almost everything on this screen, when touched, will display some type of additional info or an additional programming user interface (UI). Two pieces of UI are of special consideration here: the Room setting value (next to Board Info | Room) and the Configuration icon (⚙, next to Frequent Settings).

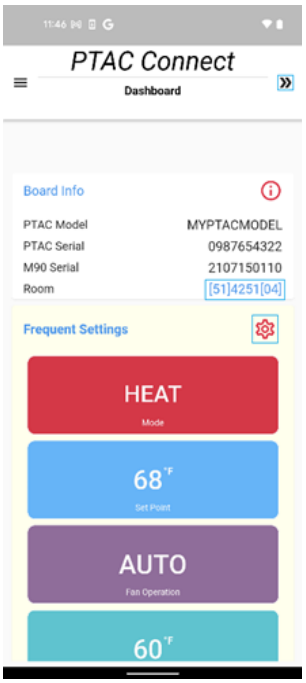


Touching the Room setting value brings up the configuration screen with the room number settings pre-populated for quick editing. From here you can set the room number your PTAC is in.

For most applications you will only need to worry about the C4 and C5 setting. The C4 setting this is commonly the "floor" your room in on. For example, if you are programming room number 213 the C4 would be 02. The second setting is the C5 setting this is the rooms "number" for the room 213 the C5 setting would be 13.

The less commonly used room number fields are the r4 and r5. The r4 is rarely used and can be safely left at 00 unless otherwise requested by a technical representative. Lastly the r5 setting this is the room suffix, this is used to distinguish between two or more units in the same room. The unit closest to the door should be set as 01, and then next from the door as 02. This will allow you to have a room 213.01 and 213.02 so you can distinguish between PTAC's during servicing and for use with the Eden Energy Management System.

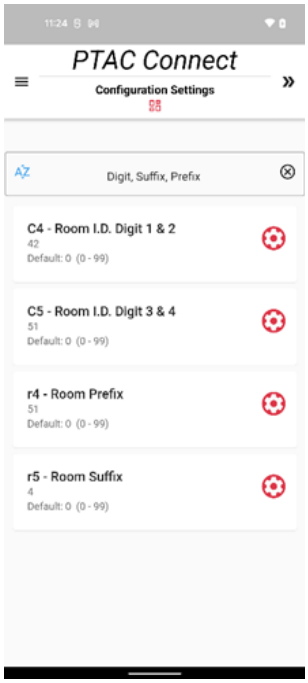

# SYSTEM OPERATION

Touching the Configuration icon brings up the Configuration screen with all PTAC settings. This screen can also be alternatively accessed via the menu (Menu | Configuration Settings).

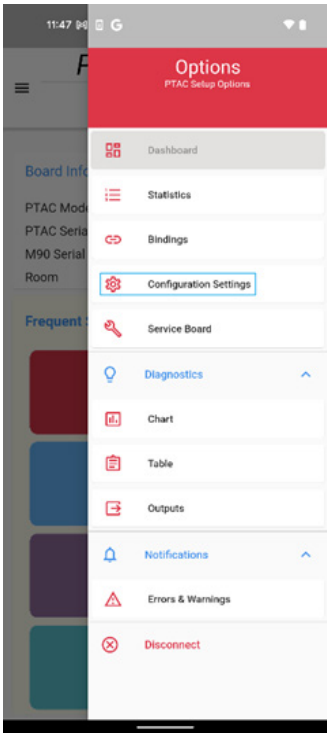


To change any setting, just touch the red gear button on the right-hand side of the setting.

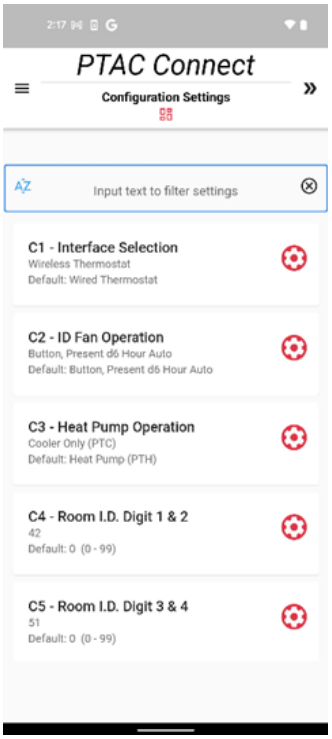


## STATISTICS

This screen displays many useful read-only runtime info from the PTAC board such as Current Mode, Current Temperature, Setback settings, etc.

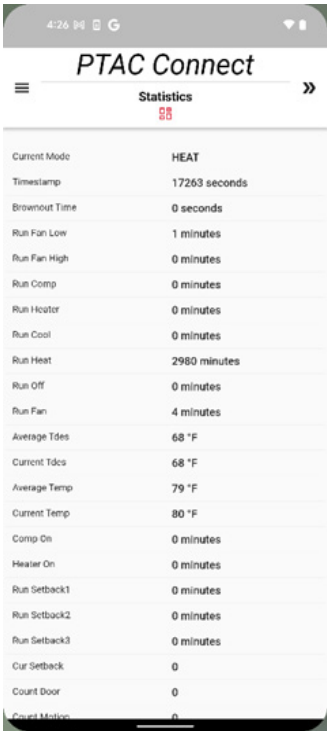


## BINDINGS

The PTAC Connect allows you to bind or unbind a wireless peripheral such as a thermostat or an occupancy sensor. Binding or unbinding is accomplished by touching the corresponding Bind or Unbind button on this screen. You will then need to press the white binding button on the peripheral you wish to bind. If the binding fails or the device cannot be reached, you can be stop the binding search with the Stop button.

You also have the option to bind without using the app. Simply press and hold the red button (PTAC control board, under the PTAC front cover and splash guard) for 5 seconds, then press the white binding button on the peripheral you wish the bind.

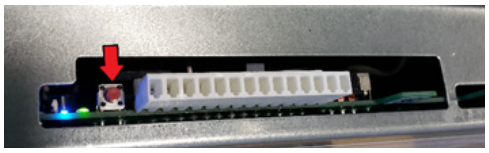

# SYSTEM OPERATION

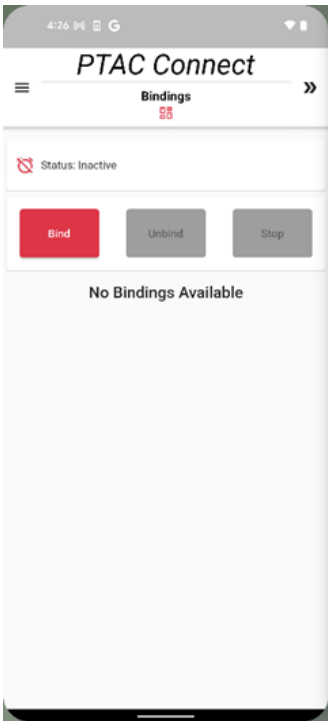


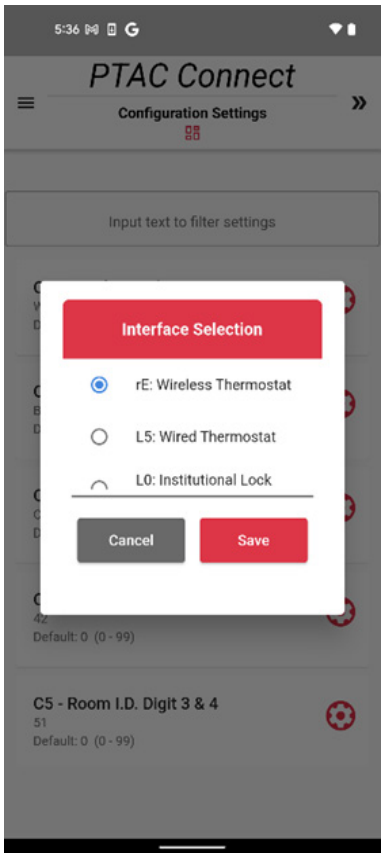


## CONFIGURATION SETTINGS

Nearly all the PTAC board's programmable settings can be configured on this screen (except for the PTAC's Model and Serial Number, which are configured on another screen, i.e., the Service Board screen).

If you would like to find a setting quickly the search bar will help you filter through the many settings available to you. Search terms can be case-sensitive and can be single words separated by commas. An example was shown above in the section for Dashboard, where Room settings were filtered with the search terms: Digit, Suffix, Prefix. Also, as briefly introduced in the Dashboard section, to change any setting, just touch the red gear button on the right-hand side of the setting. A configuration dialog or sheet will pop up to allow the user to make a setting change.

After settings changes are made, the Configuration Settings screen will display the number of settings that were edited and highlight which settings the editing was for. You will then be presented with the Save Settings button to save the changes to the PTAC board.

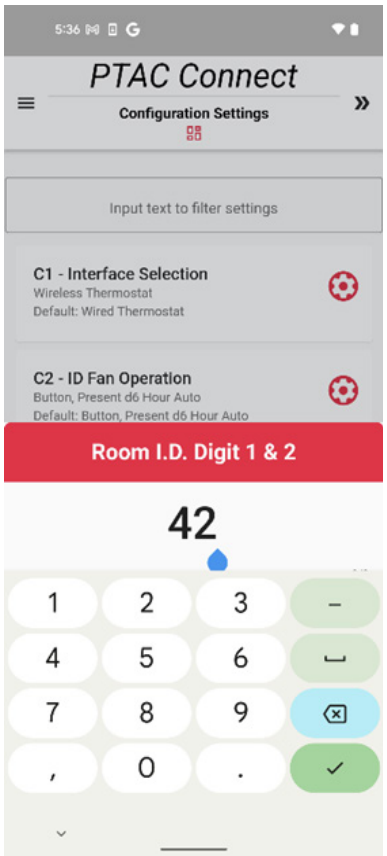

# SYSTEM OPERATION

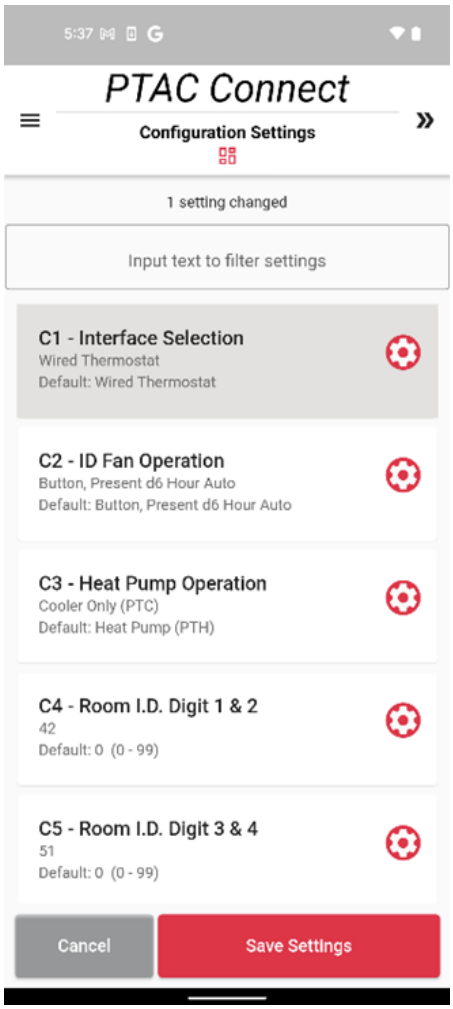


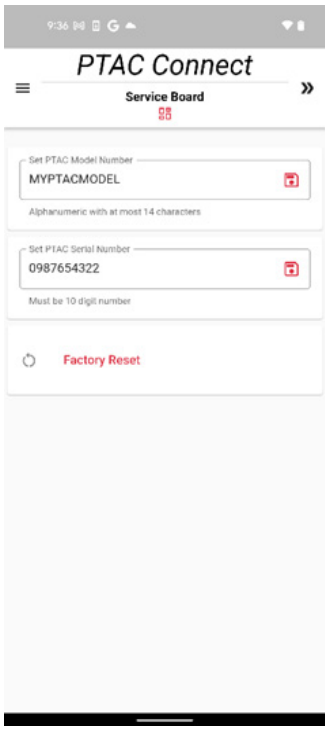


If you have the need to replace a control board, the board's Model and Serial Number are available here to be configured. Before this setting is available, the C3 *(Heat Pump Operation)* in the Configuration Settings screen must be to Eo *(Service Mode, No Operation).*

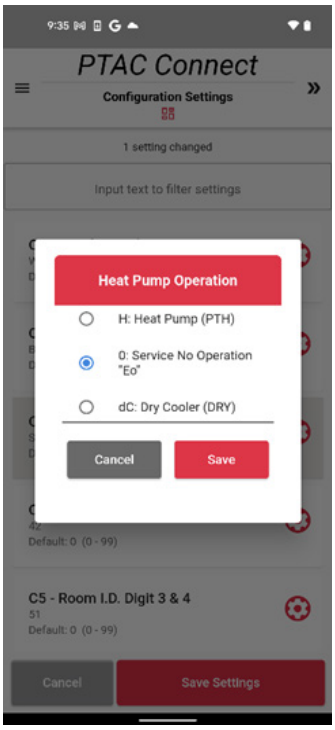


### SERVICE BOARD

This menu allows you to view the board's Model and Serial Number. It also contains the Factory Reset button for your board. By selecting Factory Reset, all programmable board settings, including those in the Configuration Settings screen, will be reset to original factory values.

# SYSTEM OPERATION

## DIAGNOSTICS

The Diagnostics screen allows you to see how the PTAC's thermistors are performing. This diagnostic tool is available both graphically (in a chart) and numerically (in a table). Based on the data that is being shown when the tool runs, you can effectively diagnose how well the PTAC is running or what issues it is experiencing.

***NOTE:*** *Once the Diagnostic process starts, it is expected to display real time values while on screen. Thus, there is no Stop button available.*

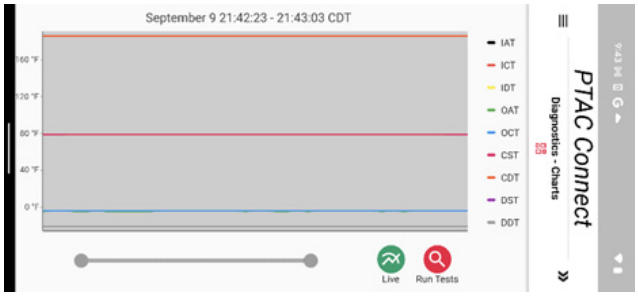

## NOTIFICATIONS

The Notifications screen reports all errors and warnings present on the PTAC board. On this screen, there are two lists. The top shows a list of all current errors. The bottom shows all *logged (historical) errors and warnings.*

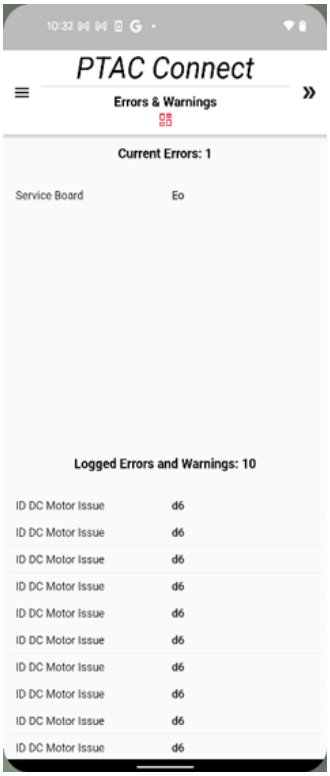


Call your Amana brand PTAC Sales representative at **800-647-2982** for complete details.

For technical support please call **877-376-0214** and for Eden support please call **877-792-6262**.

# SYSTEM OPERATION

### DIAGNOSTIC LIGHT

The red and green diagnostic light is located next to the terminal strip for the wired thermostat connections. If the lights are flashing a code you need to refer to the flash code chart to determine the cause.

### MASTER SWITCH

The master switch disconnects power to all of the system components. When this switch is in the off position, the compressor, fan motor, reversing valve, and electric resistance heater will all be de-energized.

### FAN CYCLE CONFIGURATION

The fan cycle configuration sets the operational mode of the fan. In the ON position, the fan will run continuously whenever the unit is in the heat or cool mode. In the AU position, the fan will cycle on and off with the compressor or electric heater when the unit is in the cool or heat mode.

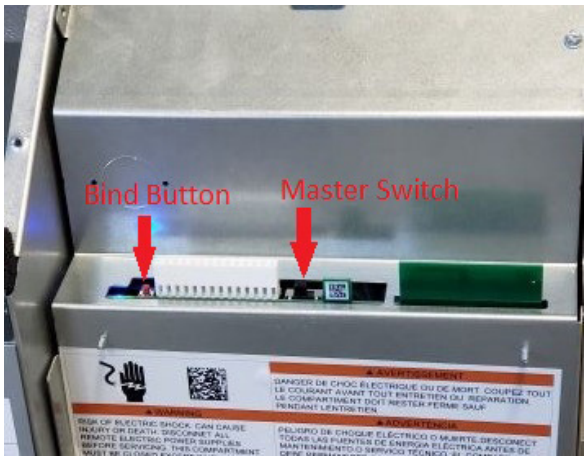


Control Board User Inputs*

***NOTE:** The PTAC Wire Harness Kit (PWHK01G70) is required for the auxiliary or remote thermostat options.

### WIRED THERMOSTAT

The C, R, GL, W2, Y/W1, B/O, and GH terminals provide control inputs for a “manufacturer-approved” remote wall mounted thermostat. The “B” terminal can be configured to become “O” if needed see Configuration Settings For remote control thermostat operation, refer to the Remote Thermostat Operation section.

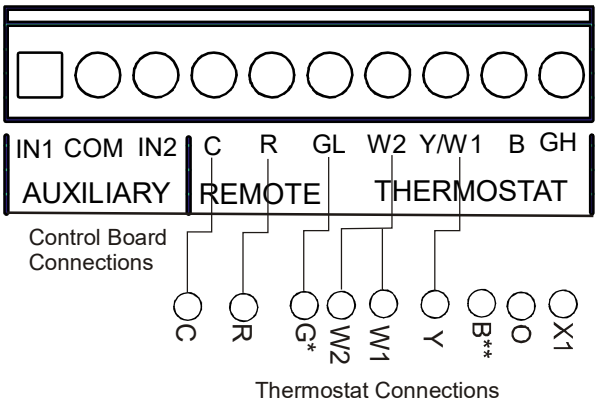


***NOTE:** For high speed fan operation, connect “G” to “GH”.

**** NOTE FOR THE B TERMINAL:** If unit is a heat pump connect B from stat to B on the board.

**IMPORTANT NOTE:** Disconnect power to the unit and/or turn the Master Switch on the control board to OFF when connecting or altering wiring to any terminal. Failure to do so may result in shorting the fuse or damaging the control board.

| MAXIMUM WIRE LENGTH FOR FRONT DESK SWITCH | |
|---|---|
| **Wire Size (AWG)** | **Maximum Length Allowed (ft)** |
| #24 | 400 |
| #22 | 600 |
| #20 | 900 |
| #18 | 1500 |
| #16 | 2000 |

The following figure shows a wiring schematic for connecting the front desk switch to the unit.

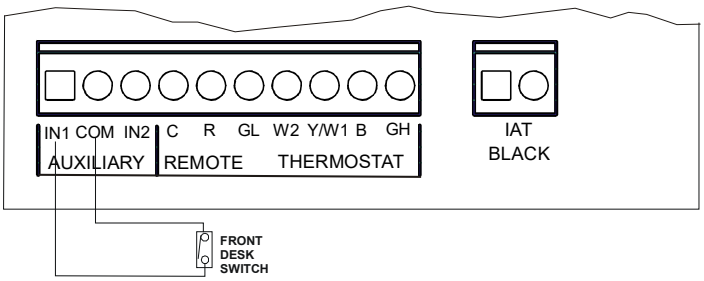


### FRONT DESK CONTROL (IN1, IN2, COM)

The COM and (IN2 or IN1) terminals provide control inputs for a front desk switch. Shorting across the terminals will disable unit operation. The only control function which will remain active when these terminals are shorted is freeze protection. Any switch which will produce a short circuit across these two terminals can be used as a front desk switch. The contact resistance of the switch, when closed, must be less than 200 ohms for the front desk feature to operate properly. Table 3 shows the maximum wire length and corresponding gage size for installation of a front desk switch. The following figure shows a wiring schematic for connecting the front desk switch to the unit.

If the unit is configured for wired unrented setback energy management (see Configuration Settings section u8 and u9). If IN* and COM are shorted, the unit will go into setback temperatures for cooling and heating as configured in c3 and c4 (see Configuration Settings). Unit operation will be disabled. “Fd” (see Diagnostic Codes) will appear on the display. This allows the room to quickly recover to a comfortable temperature when the room is occupied.

# SYSTEM OPERATION

### WIRELESS COMMUNICATIONS

PTAC models PT***J/K*** have the option to use a wireless thermostat. Refer to Using the Amana® Brand App section for setting up the wireless thermostat.

### WIRELESS THERMOSTAT

Skip these steps if not installing.

1. Select thermostat mounting location about five feet above the floor, on an inside wall, out of direct sunlight, away from sources of radiant heat (lamps, fireplaces, heating and air conditioning equipment, etc.), away from windows or door to the outside, and avoid areas with poor air circulation. If the PIR in the thermostat is to be used with a DD01* device as a 2nd motion sensor, point the thermostat towards the area where you are requiring additional motion sensing. Ensure location is out of the path of foot traffic where a person might accidentally bump into the thermostats and damage the device.
2. Remove thermostat from mounting plate by pulling apart at the bottom of the thermostat about 1”, and slide thermostat up to release from the top of the mounting plate.
3. Place thermostat mounting plate against the wall at desired location and mark placement of mounting holes. Make sure the UP arrow is pointing up on the mounting plate.
4. If mounting in drywall, tap plastic anchors into wall. For other surfaces, drill a 3/16” hole.
5. Screw mounting plate to the wall. DO NOT SNAP THERMOSTAT INTO PLACE UNTIL AFTER BINDING PROCESS. See Binding Instructions.
6. Install four (4) AA batteries (included) into the back of the thermostat. Terminals are marked “+” and “-” for polarity.

**NOTE:** Do not install thermostat on wall plate until all configuration settings and binding processes have been completed.

### WIRED POWER OPTION

1. If the option for wired power is used, the two thermostat wires (20 gauge minimum field supplied) can be connected to the thermostat.
2. Route wires through the opening in the mounting plate.
3. Loosen set screws on wired terminal and insert wires into the opening. Tighten set screws.
4. Connect wires at PTAC unit to terminal pins C and R. The wire harness kit PWHK01C is required for this connection.

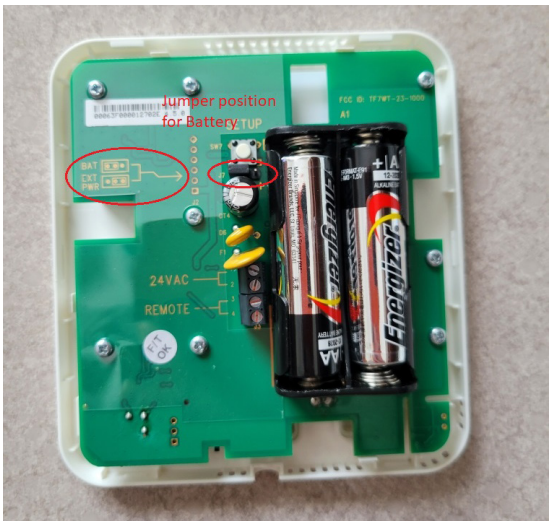


**BATTERY CONNECTION**

**NOTE:** For battery connection the 2 jumpers must be positioned as shown above, with jumpers on the center & left.

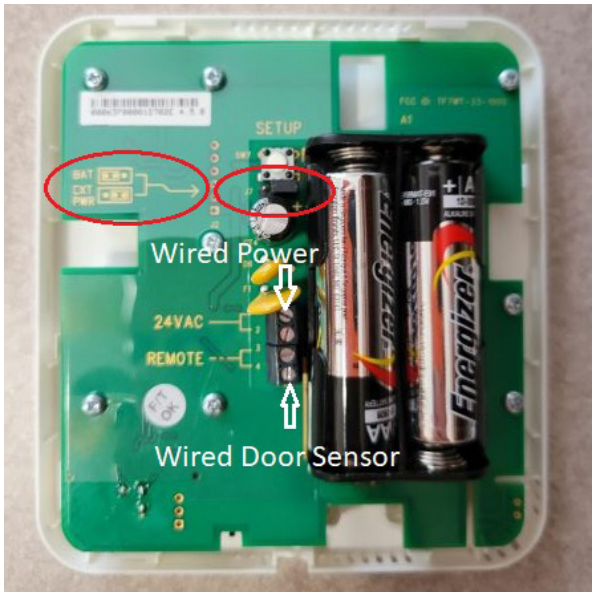


### POWERED CONNECTION

**NOTE:** For external power connection, the jumper must be positioned on the center and right pins. Connect wires from R & C from the control boards wired thermostat connection to the wired power terminals on the thermostat location in photo above.

For complete set up and configuration of the wireless thermostat and door sensor please refer to the installation instructions provided with the wireless thermostat and door sensor.

| Reference M70/M90 Conf. Code | Configuration Code Description | Option Code | Option Code Description |
|---|---|---|---|
| C1 | User Interface Selection | 0 | Reverts to L5 (Legacy Chassis Membrane) |
| | | L5 * | Wired Thermostat |
| | | rE | Wireless Stat (Self configures at binding) |
| | | L0 | Institutional Lock Wireless Thermostat |
| C2 | Fan Switch Type (ID Fan Op.) | bP | Follows (Cr) selection if any |
| | | bA** | Follows (Cr) selection if any; reverts to Auto after (d6) hours |
| | | A | Fan always runs (24/7/365) |
| | | bC | Follows (Cr) selection if any; reverts to Cont. after (d6) hours |
| | | Au | Reverts to "bA" |
| | | On | Reverts to "bA" |
| | | C | Reverts to "bA" |
| C3 | Basic Unit Type | C | Cooler Only (PTC) |
| | | H* | Heat Pump (PTH) |
| | | 0 | Service No Operation "Eo" |
| | | dC | Dry Cooler (DRY) |
| | | dH | Dry Heat Pump (DRH) |
| | | uC | Revert to option “C” |
| | | uH | Revert to option “H” |
| | | AC | Makeup Air Cooler (PMC) |
| | | AH | Makeup Air Heat Pump (PMH) |
| | | EC | High Eff. Cooler (HEC) |
| | | EH | High Eff. Cooler (HEH) |
| | | 3C | 32C Cooler (32C) |
| | | 3H | 32C Heat Pump (32H) |
| C4 | Room Digits 1 & 2 | 00* - 99 | 00* - 99 |
| C5 | Room Digits 3 & 4 | 00* - 99 | 00* - 99 |
| C6 | Occupancy Type (Use of wired occupancy sensor) | 0 ** | Off ** |
| | | 1 | On |
| | | 18 | 18 Hour Automatic entry into setbacks w/ no button op. |
| C7 | Motion Sensor Polarity (Normally open/closed) | 0 ** | Normally Closed ** (0 w/ occ) |
| | | 1 | Normally Open (1 w/ occ) |
| C8 | Temp limit COOLING (min) | 60** - 80 | 60** - 80 DEGF |
| C9 | Temp limit HEATING (max) | 68 - 90, 80** | 68 - 90, 80** DEGF |
| C0 | Thermostat Reversing ("B" or "O") | b ** | "B" T-stat Terminal ** |
| | | 0 | "O" T-stat Terminal |

* FACTORY DEFAULT
** FACTORY DEFAULT RESTORES ON FACTORY RESTORE DEFAULT OPERATION

| Reference M70/M90 Conf. Code | Configuration Code Description | Option Code | Option Code Description | |
|---|---|---|---|---|
| c3 | Unrented Cool Setpoint | 73 - 95, 79** | 73 - 95 DEGF | Yes |
| c4 | Unrented Heat Setpoint | 45 - 67, 63** | 45 - 67 DEGF | Yes |
| CA | Wireless twinning enabled | 0 ** | Not Twinned ** | Yes |
| | | 5 | Twinned | |
| Cb | Dehumid Activation (enable larger room swing) | 0 ** | Not Active ** | Yes |
| | | 1 | Active | |
| | | U | Active in Unrented/Unoccupied | |
| CC | Dehumid Call Drop Temp (room swing delta) | 3** - 8 | 3** - 8 DEGF | Yes |
| Cd | English/Metric Temperature (Display DEGF or DEGC) | F ** | Fahrenheit Scale ** | Yes |
| | | C | Celsius Scale | |
| CE | Freeze Protection (Activation & speed selection) | L ** | Freeze Protection On, Low Fan (FP & HS) ** | Yes |
| | | H | Freeze Protection On, High Fan (FP & HS) | |
| | | 0 | Freeze Protection Off; Heat Sentinel Low Fan | |
| CF | High Speed Fan Temp Cool (Cooling temp delta for ID fan to go to high in auto fan) | 5** - 9 | 5** - 9 DEGF | Yes |
| CH | High Speed Fan Temp Heat (Heating temp delta for ID fan to go to high in auto fan) | 6 - 8** | 6 - 8** DEGF | Yes |
| CJ | Second Stage Heat (Delta setting or disable) | 4** - 8 | 4** - 8 DEGF | Yes |
| | | - - | No Elec. Heat | |
| Cr | T-stat Fan Button (applicable only to single button thermostat) | 0 | T-stat - toggles through all 6 options<br>Lo Auto, Lo Cont., Hi Auto, Hi Cont., Smart Auto, Smart Cont. | No |
| | | 1 | T-stat - Button selects<br>Lo Cont.- Hi Cont. - Smart Auto | |
| | | 2 | T-stat - Button selects<br>Cont.- Auto<br>Fan is in Smart Speed only | |
| Cu | Mode Button Usage | 0 * | Off/Cool/Heat * | No |
| | | 1 | Off/Auto-changeover | |
| | | 2 | Off/Cool/Heat/Auto-changeover | |
| Cy | Auto-changeover Dead Band | 4 - 9, 4* | 4 - 9, 4* | Yes |
| d1 | Room Air Mix Cooling | 1 | Reverts to Off | Yes |
| | | 0 ** | Off ** | |
| d2 | Room Air Mix Heating | 0 ** | Off ** | Yes |
| | | 1 | Reverts to Off | |
| d3 | Air Mix Fan Speed | L ** | Low ** | Yes |
| | | H | High | |

* FACTORY DEFAULT
** FACTORY DEFAULT RESTORES ON FACTORY RESTORE DEFAULT OPERATION

| Reference M70/M90 Conf. Code | Configuration Code Description | Option Code | Option Code Description | |
|---|---|---|---|---|
| d4 | Heating Smart Fan ("Auto" adjusting speed availability in Heating) | 0 | Not Available | Yes |
| | | 1 ** | Available ** | |
| d5 | Health Warning Activation (warnings/lockouts enable) | 1 | Enable | Yes |
| | | 0 ** | Disabled* | |
| d6 | Sensorless Unoccupied Time (hrs. to enter un-occupied state w/o button press) | 1 - 32, 18** | 1 - 32, 18* Hours | Yes |
| d7 | Setback 1 Value (Degrees setback in 1st setback period) | 1 - 16, 2** | 1 - 16, 2** DEGF | Yes |
| d8 | Setback 1 Time (hrs. before 1st setback period after going un-occ.) | 0.1, 0.5**, 1 - 24 | 0.1 ,0.5 ,1 - 24, .5** Hours | Yes |
| d9 | Setback 2 Value (Degrees setback in 2nd setback period) | 1 - 16, 3** | 1 - 16, 3** DEGF | Yes |
| dA | Setback 2 Time (hrs. before 2nd setback period after going un-occ.) | .5, 1** - 24 | (d8) - 24, 1** Hours | Yes |
| db | Setback 3 Value (Degrees setback in 3rd setback period) | 1 - 16, 6** | 1 - 16, 6** DEGF | Yes |
| dC | Setback 3 Time (hrs. before 3rd setback period after going un-occ.) | 1 - 24, 3** | (dA) - 24, 3** Hours | Yes |
| dd | Cooling Capacity (Nominal/Unit Nomenclature) | 0, 5-24, 15* | 0 (test unit), 5,000 - 24,000 BTU, 15,000 * | No |
| dF | Group Code (Hotel unique platform code - multiple hotels in proximity) | 00* - 99 | 00* - 99 | No |
| dH | Electric heater size (Nominal/Unit nomenclature) | 00, 15, 20, 25, 35, 50* | 00, 15, 20, 25, 35, & 50* kW | No |
| dJ | Operating voltage (Nominal/Unit nomenclature) | 2, 3*, 4, 5 | 2, 3*, 4, 5 | No |
| dL | Selects to show (or not) actual setpoint if limiting SP | 0** or 1 | 0** or 1 | Yes |
| FA | Temp below which "FA" error code fires | 20 – 40, 30* | 20°-40°, 30°* | No |
| HA | (Temp + 200) above which "HA" error code fires | 00 - 57, 50* | 200° + {0° - 57°}, 250°* | No |

* FACTORY DEFAULT
** FACTORY DEFAULT RESTORES ON FACTORY RESTORE DEFAULT OPERATION

| Reference M70/M90 Conf. Code | Configuration Code Description | Option Code | Option Code Description | |
|---|---|---|---|---|
| J8 | Time un-rented state will revert to rented if network lost | 01 - 99, 30* | 01 - 99, 30* Minutes | No |
| Jb | Freeze Protection Temp | 25 -55, 40* | 25 -55, 40* DEGF | No |
| JC | IAT Weight (Percentage weighting of IAT verses RIAT to room temp) | 0 - 99, 20* | 0 - 99, 20* | No |
| Jd | Offset temperature to align stat with customer's reading | -9 - 9, 0* | -9 - 9, 0* DEGF | No |
| JF | Economizer/Smart Vent Outside Cold Limit (Coldest OD temp Economizer / Smart Vent allowed to op.) | 0 ** | 0 ** [No limit] | Yes |
| | | 1 – 70 | {1 – 70} -20 (55=35°F) | |
| JH | Economizer/Smart Vent Outside Heat Limit (Hottest OD temp Economizer / Smart Vent allowed to op.) | 0** | 0 [No limit] | Yes |
| | | 60 – 99, 95 | 20 + {60 – 99}, 95 (95=115°F) | |
| JJ | Electric or Hydronic Heat | 0 | Reverts to 27 | No |
| | | 1 - 25 | Reverts to 27 | |
| | | 27* | Electric Heaters | |
| | | 28 | Reverts to 27 | |
| | | 29 | Hydronic (N.C. Valve) | |
| | | 30 | Hydronic (N.O. Valve) | |
| JP | Temp subtracter to 210 or 230 for "H2" & "H4" error, 0=Off | 0 ** | 0 ** | Yes |
| | | 1 - 99 | 1 - 99 | |
| JL | PSC / DC motor usage | 0 * | ID PSC w/ Hall Effect & OD PSC Motors | No |
| | | 1 | ID DC Motor & OD PSC Motor | |
| | | 2 | ID PSC Motor w/ Hall Effect & OD DC Motor | |
| | | 3 | ID DC & OD DC Motors | |
| Ld | (# x 10) = minutes for Lighting control op; 0=Disabled | 0 | 0 [Disabled] | Yes |
| | | 1-9, 3** | 10 x {1-9}; 10 x 3** = 30 Minutes | |

* FACTORY DEFAULT
** FACTORY DEFAULT RESTORES ON FACTORY RESTORE DEFAULT OPERATION

| Reference M70/M90 Conf. Code | Configuration Code Description | Option Code | Option Code Description | |
|---|---|---|---|---|
| | Selects Smart Vent op. (w/fan, w/occ., 100%, etc.) | 1 ** | On only when ID fan running ** | |
| | | 2 | On only when ID fan running and room is occupied. | |
| | | 3 | On all the time | |
| | | 4 | On when room is occupied | |
| | | E | Economizer (compressor locked out) | |
| | | EP | Econ & compressor assist | |
| P2 | Selects DigiAir op (off, unlimited, w/ fan, w/occ, etc.) | 0 | Off | Yes |
| | | 1 ** | May be On Anytime ** (Kit fan is always running) | |
| | | 2 | Allowed on only when not in Off mode | |
| | | 3 | Allowed only when ID fan is running | |
| | | 4 | Allowed on only when room is unoccupied | |
| | | 5 | Allowed on only when room is occupied | |
| | | 6 | Allowed only when ID humidity is higher than (ub) | |
| | | 7 | Same as opt. 6; but muffin fan is always running and heater as allowed | |
| | | 8 | Allowed only when Bath Vent is running | |
| | | 9 | Allowed only when Bath vent is running & Occupied | |
| P3 | Low Indoor PSC Motor Relay usage (Pin 4 on J504) | 0 * | PSC Low Speed Blower * | No |
| | | 1 | Reverts to 0 | |
| | | 3 | Reverts to 0 | |
| | | 4 | Reverts to 0 | |
| | | 5 | Reverts to 0 | |
| | | 6 | Reverts to 0 | |
| | | 7 | DigiAir Air Compressor | |
| P4 | High Indoor PSC Motor Relay usage (Pin 1 on J504) | 0 * | PSC High Speed Blower * | No |
| | | 1 | Reverts to 0 | |
| | | 2 | DigiAir Heater | |
| | | 3 | Reverts to 0 | |
| | | 4 | Reverts to 0 | |
| | | 5 | Reverts to 0 | |
| | | 6 | Reverts to 0 | |
| P5 | Low Outdoor PSC Motor Relay usage (Pin 4 on J503) | 0 * | PSC Low Speed Fan * | No |
| | | 3 | Reverts to 0 | |
| | | 4 | Reverts to 0 | |
| | | 5 | Reverts to 0 | |
| | | 6 | Condensate Pump Kit | |
| P6 | High Outdoor PSC Motor Relay usage (Pin 1 on J503) | 0 * | PSC High Speed Fan * | No |
| | | 3 | Reverts to 0 | |
| | | 4 | Reverts to 0 | |
| | | 5 | Reverts to 0 | |
| | | 6 | Reverts to 0 | |
| P7 | Acc 1 Relay usage | 0* | No Function* | |

* FACTORY DEFAULT
** FACTORY DEFAULT RESTORES ON FACTORY RESTORE DEFAULT OPERATION

| Reference M70/M90 Conf. Code | Configuration Code Description | Option Code | Option Code Description | |
|---|---|---|---|---|
| | (Pin 2 on J506, Pin 2 on J507, & Pin 1 on J200) | 1 | Makeup Air Ventilation | No |
| | | 3 | Ventilation/Econ/Econ+, per (P0) * | |
| | | 4 | Lighting Control Kit | |
| | | 5 | Transfer Fan Kit | |
| | | 11 | Hydronic Valve / Exterior Heater | |
| P8 | Acc 2 Relay usage (Pin 2 on J508, & Pin 3 on J200) | 0* | No Function* | |
| | | 4 | Lighting Control Kit | No |
| | | 5 | Transfer Fan Kit | |
| | | 9 | Bath Vent Unique Operation | |
| | | 11 | Hydronic Valve / Exterior Heater | |
| P9 | DC Motor Quiet Speeds Enable--Future | 0 ** | Only run Standard Speeds | Yes |
| | | | | |
| | | 1 | Only run Quiet Speeds | |
| | | 2 | Standard Spds in daytime; Quiet Spds in Night (EC1 only) | |
| | | 3 | All Speeds based upon delta T & humidity? in Auto | |
| r0 | Warning "L7" severity selection | 0 | Revert to option "1" | Yes |
| | | 1 ** | L7 will evoke only a recorded code, user still able to adjust temperature settings. ** | |
| | | 2 | Revert to option "1" | |
| | | 3 | Complete Shutdown and Lockout. Error code will be evoked on Bluetooth App or Central Control. | |
| r4 | Room Prefix | 00* - 99 | 00* - 99 | No |
| r5 | Room Suffix | 00* - 99 | 00* - 99 | No |
| u1 | Disable motion sensor on T-stat | 1 ** | Enabled ** | Yes |
| | | 0 | Disabled | |
| u2 | Allow display of room temp on T- stat; except for setting | 0 ** | Display only Set Point ** | Yes |
| | | 1 | Display Room Temp | |
| u3 | Temp to engage Heat Sentinel; 0=Disabled | 0 ** | Disabled ** | Yes |
| | | 78 - 99 | 78 - 99 DEGF | |
| u4 | Open Door Shut down (Minutes door left open before shutting down) | 0 ** | Disabled ** | Yes |
| | | 1 - 30 | 1 - 30 Minutes | |
| u7 | Compressor Lock-in Time | 4** - 10 | 4** - 10 Minutes | Yes |
| u8 | Input Pins IN1 (FD, LS, EHH, door, etc.) | 0 | Door Switch | Yes |
| | | 1 | Motion Sensor | |
| | | 2 ** | Front Desk ** | |
| | | 3 | Wired Un-rented Set Back | |
| | | 4 | Emergency Hydronic | |
| | | 5 | Load Shedding | |
| | | 6 | Alarm Sensor (normally open option) | |
| | | 7 | Alarm Sensor (normally closed option) | |
| | | 8 | Bath Vent Op. Input | |

* FACTORY DEFAULT
** FACTORY DEFAULT RESTORES ON FACTORY RESTORE DEFAULT OPERATION

| Reference M70/M90 Conf. Code | Configuration Code Description | Option Code | Option Code Description | |
|---|---|---|---|---|
| | | 9 | Hydronic Coil Switch | |
| u9 | Input Pins IN2 (FD, LS, EHH, door, etc.) | 0 | Door Switch | Yes |
| | | 1 | Motion Sensor | |
| | | 2 ** | Front Desk ** | |
| | | 3 | Wired Un-rented Set Back | |
| | | 4 | Emergency Hydronic | |
| | | 5 | Load Shedding | |
| | | 6 | Alarm Sensor (normally open option) | |
| | | 7 | Alarm Sensor (normally closed option) | |
| | | 8 | Bath Vent Op. Input | |
| | | 9 | Hydronic Coil Switch | |
| ub | ID humidity below which DigiAir does not run; (P2=6 must) | 0,15 - 80, 25** | 0, 15 - 80, 25** | Yes |
| uE | Room delta above Setpoint Economizer reverts to A/C | 0-50, 10** | 0-50, 10** DEGF | Yes |
| uF | Temp OD must be below Setpoint for Economizer | 0-50, 5** | 0-50, 5** DEGF | Yes |
| uH | Cooling Setpoint when exiting Un-rented state | 60 - 72** | 60 - 72** DEGF | Yes |
| uJ | Heating Setpoint when exiting Un-rented state | 74** - 90 | 74** - 90 DEGF | Yes |
| uL | Two-digit security code required to enter Configurations | 00* - 99 | 00** - 99 | No |
| un | OD humidity level above which DigiAir compressor op. | 0 | Disabled | Yes |
| | | 15 - 60, 30** | 15 - 60, 30** | |
| ur | Selects if DigiAir uses only single or multi-level %RH | 0 ** | DigiAir compressor engages on Steps ** | Yes |
| | | 1 | DigiAir compressor engages on OD %RH (un)+30 | |
| uu | Selects if ID fan runs concurrent with DigiAir compressor | 0 ** | ID Fan runs at speed per standard logic **Everex Factory | Yes |
| | | 1 | ID Fan runs low with DigiAir *Goodman factory | |

* FACTORY DEFAULT
** FACTORY DEFAULT RESTORES ON FACTORY RESTORE DEFAULT OPERATION

# SCHEDULED MAINTENANCE

**NOTE:** The compressor does not require maintenance. It is hermetically sealed, permanently lubricated.

### MONTHLY MAINTENANCE AND CLEANING

### INTAKE AIR FILTER

To properly maintain the operational performance of your PTAC unit, it is extremely important that the inlet air filter be cleaned once per month or more often if operated in dusty or dirty locations or conditions. The intake air filter is constructed of durable polypropylene. The “air intake” air filter can be easily inserted into the cabinet front using the cabinet filter guides. The intake air grille pulls upward for easy access to the filter. Before cleaning the intake filter, turn the unit off by setting the mode switch to the OFF position. Filter should be cleaned as required.

The following procedure is used to remove the intake filter:

1. Grasp each filter by its molded handle, located on the front edge of the front, below the discharge grill.
2. Pull the filter straight up and remove.
3. Clean filter with vacuum or with running water. Reverse this procedure to reinstall the filters.

**NOTE:** Available accessory filter kits are FK10B (air intake filter - 10 per pack) and CFK10B (charcoal filter - 10 per pack). The charcoal filters will greatly improve the quality of the air by absorbing odors from tobacco smoke, mold, mildew, etc. Both filters are permanent and cleanable. Contact your sales person for details.

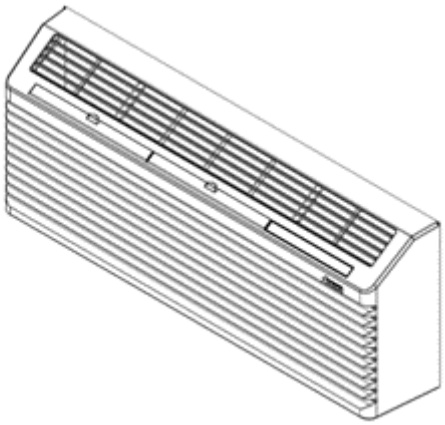

INTAKE FILTER REMOVAL

### VENT SCREEN

Before cleaning the vent screen, disconnect power to the unit by unplugging the power cord at the wall outlet or subbase, or disconnect power at the fuse box or circuit breaker. If unit is operated with vent door closed, the vent screen does not need to be cleaned.

1. Remove the cabinet front as described in Front Removal.
2. Remove the six screws securing the chassis to the wall sleeve.
3. Slide the chassis out of the wall sleeve far enough so that the vent screen is accessible.
4. Clean and replace the vent screen, slide the chassis back into the wall sleeve, secure it in place with six screws and reinstall the front cabinet.

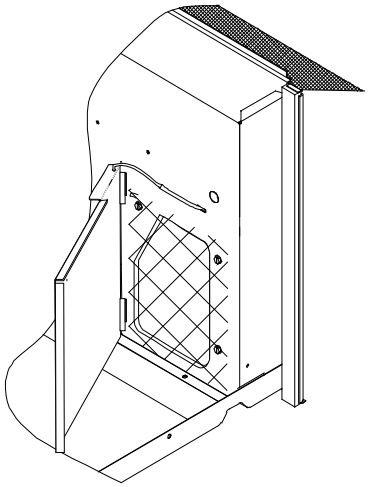

VENT - (LEFT SIDE UNIT)

### CABINET FRONT

The cabinet front and discharge air grille can be cleaned with a water dampened cloth. Under no circumstances should hydrocarbon-based cleaners (e.g. acetone, benzene, naphtha gasoline, etc.) or ammonia based cleaners be used to clean the front or air grilles. Use care when cleaning the control area.

### YEARLY MAINTENANCE AND CLEANING

**NOTE:** Use a mild biodegradable detergent such as Simple Green™ when cleaning the unit.

Special care must be taken to protect the unit’s control board and other electrical components from getting any water on them while cleaning. The use of harsh or caustic cleaning agents or materials such as bleach or coil cleaners that are not designed for PTAC products will cause damage or deterioration of the aluminum fin or coil material and is not recommended. Care must be taken not to bend the aluminum fin stock.

### ROUTINE SCHEDULED MAINTENANCE

To achieve continuing top performance and high efficiency, establish a “once a year” cleaning/inspection schedule for the unit. Take the unit out of the sleeve and thoroughly clean and rinse. Be sure to include in the yearly cleaning the evaporator coils, and condenser coils, basepan, and drain passages. Scheduled maintenance can be accomplished by either local maintenance staff or by an authorized servicer. They must follow the instructions described in this manual.

### ADVERSE OPERATING CONDITIONS MAINTENANCE

Units operating in dusty or corrosive locations; i.e. dusty construction site or sea coast, must be cleaned more often. A minimum of four (4) times a year will maintain proper operational conditions and protect unit components.

# SCHEDULED MAINTENANCE

### WALL SLEEVE

Clean the wall sleeve while cleaning the unit. The caulking around the sleeve should be checked to make sure that any potential air and water openings around the sleeve are properly sealed. The wall sleeve's level should also be rechecked. Proper leveling for most installations are a ¼ bubble tilt to the outside and level from right to left. Contact your sales person for detailed maintenance or cleaning instructions.

### BASEPAN AND CONDENSER COIL

Before cleaning the basepan and condenser coil, turn OFF unit mode switch and disconnect power to the unit. To disconnect power, either unplug the power cord at the wall outlet or subbase, or disconnect power at the fuse box or circuit breaker.

1. Create a water-tight seal by tightly covering the entire control panel area and fan motor with plastic. Creating this seal prevents water from entering the control area or the fan motor and damaging the unit.
2. Spray condenser coil and basepan down with water. Next spray a mild biodegradable detergent such as Simple Green™ onto the condenser coil and basepan. Let set for five (5) minutes.
3. Rinse condenser coil and basepan with water again. **NOTE:** Ensure water pressure is no higher than that of an ordinary garden hose and the water temperature no higher than 120°F.
4. Tilt the non-compressor side of the unit up no higher than 45 degrees and allow water to drain out the other side of the unit.
5. Remove excess water left in the basepan by wiping the basepan with a dry cloth.
6. Remove the water-tight seal from the motor and control panel area.
7. Reinstall unit back into wall sleeve.
8. Allow unit to dry for 24 hours before reapplying power. When power is reapplied test unit for proper operation.
9. Place a non-acidic algaecide in the basepan to inhibit bacteria growth. Ensure the algaecide is compatible with wet coil operation and is not corrosive to the coil.

### CLEARANCE CHECK

Clearances around the unit should also be checked to make sure that the intake air and discharge air paths have not become blocked or restricted. A minimum of eight inches clearance is needed from unit to furniture, beds, or other objects for proper operation. Restricted discharge or intake air will reduce the units operational performance. In severe airflow restrictions damage can occur to unit components such as the compressor, electric heater or fan motor.

Normal Operating Sounds and Conditions

### WATER TRICKLING SOUNDS

Water is picked up and distributed over the coil. This improves the efficiency and helps with water removal.

### WATER DRIPPING

Water will collect in the base pan during high humidity days. This can cause overflow and drip from the outside of the unit.

### AIR SOUNDS

The fan cycle switch sets the operational mode of the fan in the on position. When the unit is in conditioning mode for example high or low heat or cool, the fan will run continuously. In the AUTO position, the fan will cycle on and off with the compressor or electric heater.

### STARTING DELAY

You may notice a few minutes delay in the starting if you try to start the unit too soon after turning the unit off. This is due to a built in delay to protect the compressor.

### AIR DISCHARGE GRILLE

The discharge grille can be adjusted to expel air at either a 16° or 56° angle.

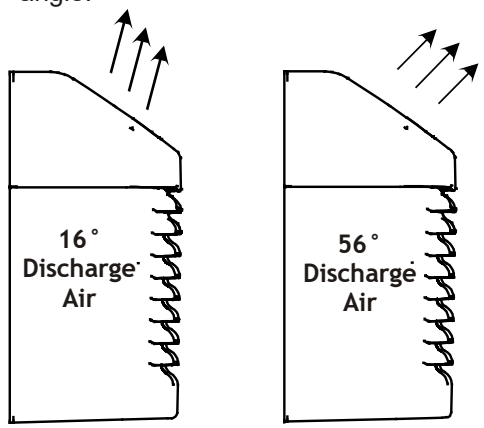


DISCHARGE GRILLE ORIENTATION OPTIONS

Use the following procedure to change the angle of the discharge air flow:

1. Remove the front cabinet (see Front Removal).
2. Position the front so that the backside is accessible.

### DISCHARGE AIR FLOW

3. Remove the four (5) screws which secure the discharge air grille to the cabinet front.

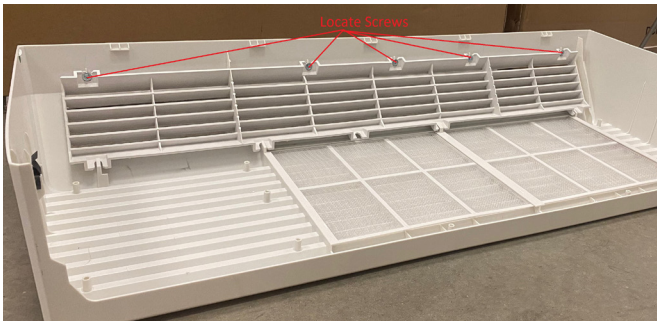


DISCHARGE AIR FLOW GRILLE REMOVAL

4. Rotate the grille 180° end-for-end.
5. Reinstall the screws to 18 IN-LBS securing the discharge air grille to the cabinet front. Reinstall the cabinet front on the unit.

# REFRIGERANT SYSTEM

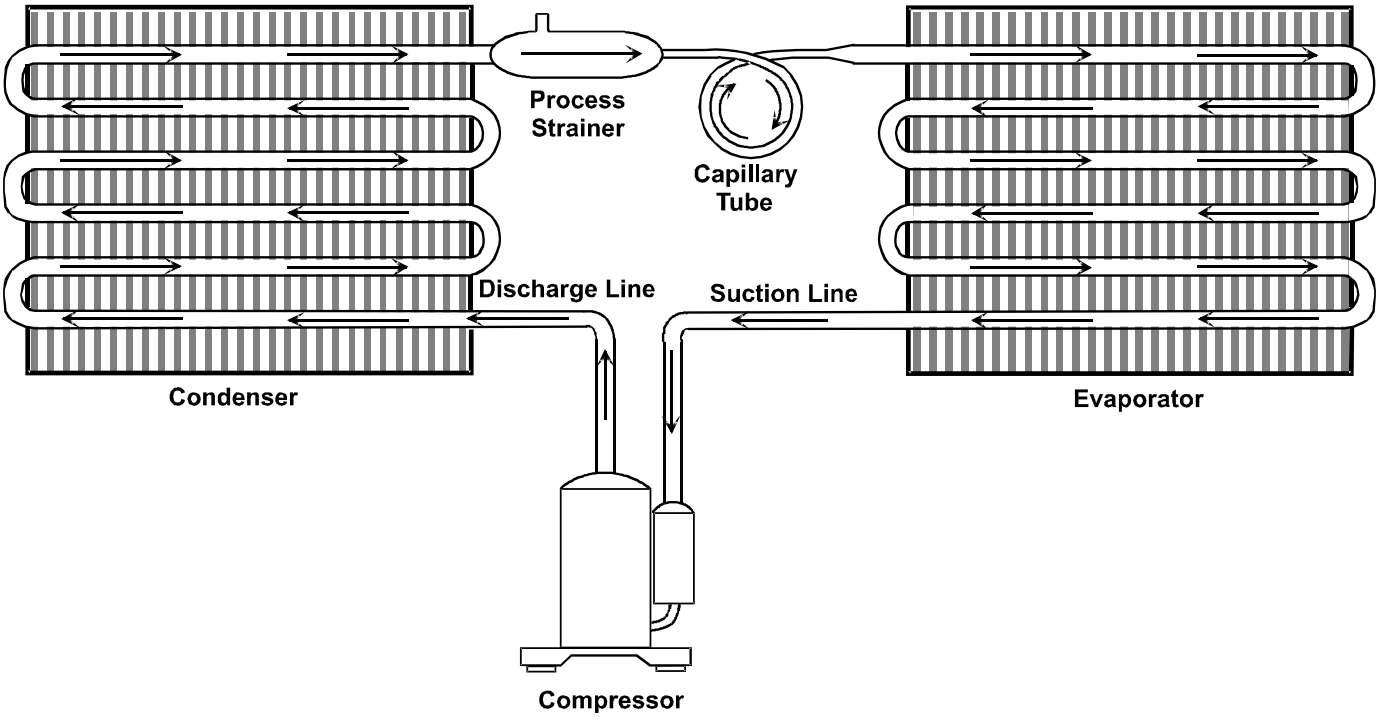


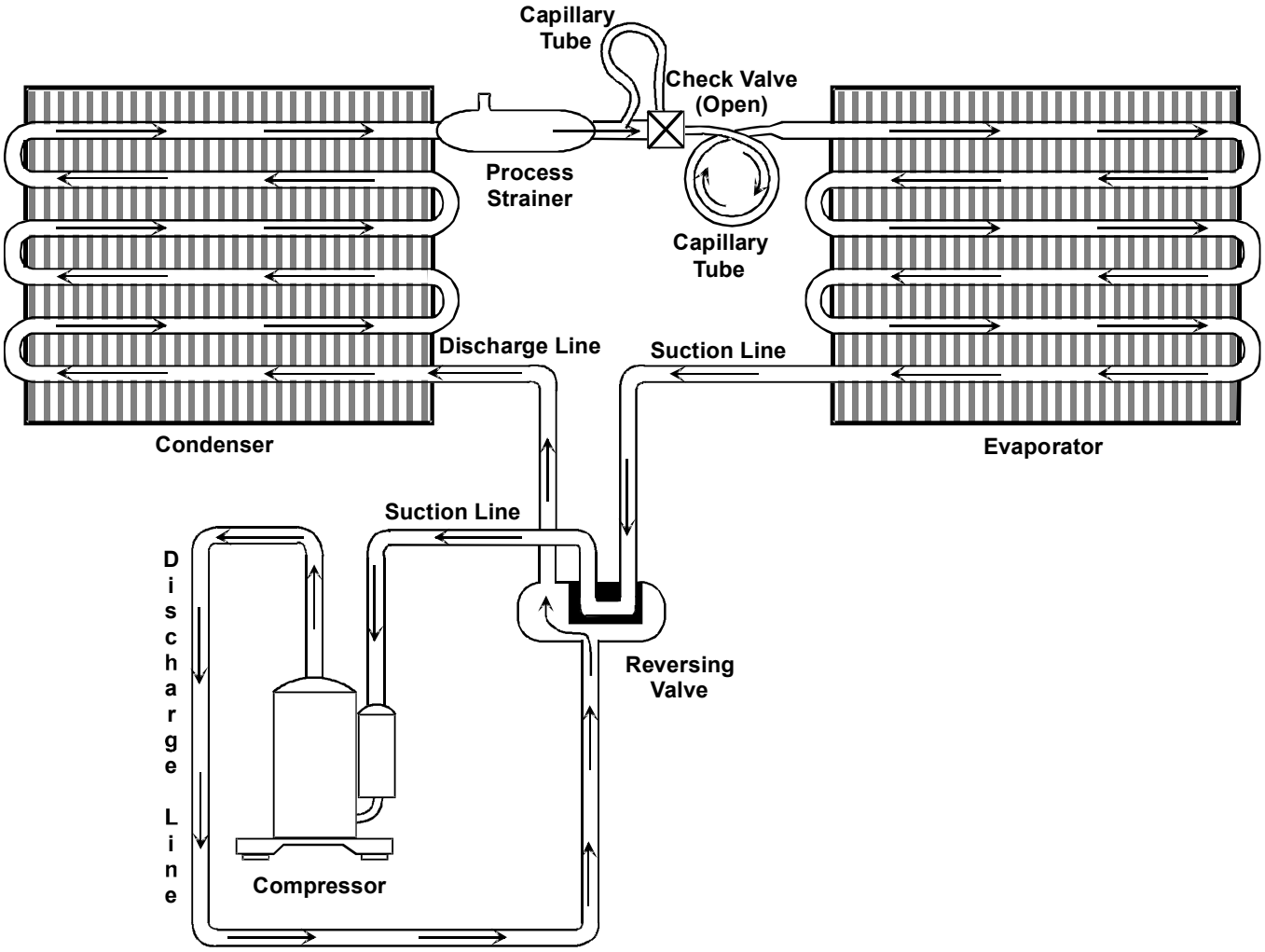

# SERVICING

## REFRIGERATION SYSTEM SERVICE

**IMPORTANT NOTE:** Some models contain R32 refrigerant and can be identified in a couple ways. The model serial plate will indicate R32, there is a red label added to the process tube and A2L labels have been added to the unit. If there is damage to a the red label on the process tube it will need to be replaced.

**IMPORTANT NOTE:** Effective July 1,1992 before opening any refrigerant system it is the responsibility of the service technician to capture the refrigerant for safe disposal.

Refer to the cooling and heater performance charts in this section for capacity test procedure.

A step-by-step procedure for determining source of trouble, suggested method and normal values are provided in the Diagnosis Charts.

Service operations requiring opening of the hermetically sealed refrigeration system should not be performed in the home. The unit must be taken to a well equipped shop where special equipment for evacuating, dehydrating, charging and testing is available. The following equipment is necessary.

Equipment to use dry nitrogen of no more than .0012 grains of moisture. Vacuum pump capable of evacuating to a minimum of 50 microns.

Vacuum Pump - Kenney or equivalent. Micron gauge to check vacuum. Refrigerant charging cylinder accurate to within ¼ oz. Electronic leak detector - General Electric or equivalent. Electrical equipment to test: compressors, capacitors, voltage relays and overload protectors Electrical test board or portable equipment, including: volt meter, ammeter, and watt meter. Silver soldering and brazing equipment: Pinch off tools ¼” to ⅝” Thermocouple tester.

## DEHYDRATING AND EVACUATING REFRIGERATION SYSTEM

A rather popular misconception exists that since air conditioners normally operate with a refrigerant temperature above 32°F., moisture in the system is harmless. Nothing could be further from the truth. Oxygen from moisture plus normal compressor and motor heat reacts chemically with the refrigerant and oil to form corrosive hydrochloric and hydrofluoric acids. These acids contribute to the breakdown of motor winding insulation and the corrosion of compressor working parts and cause unnecessary compressor failure. Sludge, which is a residue of the chemical action, coats all compressor parts, the inside of refrigerant tubing, and may even restrict refrigerant flow through the capillary tube(s).

## LEAK TESTING

Refrigerant leaks are best detected with a halide or electronic leak detector.

**NOTE:** Leak detectors must be compatible with R-410A refrigerant.

The importance of careful leak testing cannot be overemphasized. Undetected leaks invariably lead to repeated calls and eventually result in system contamination, restrictions and burned out compressors. For a system that contains a refrigerant charge and is suspected of having a leak, stop the operation, check all tubing and fittings. Soap suds may also be used.

**NOTE:** The flame of the halide detector will glow green in the presence of R-410A refrigerant.

If a leak is detected, do not attempt to apply more brazing material to the joint. Recover the charge, unbraze the joint, clean and rebraze.

For a system that has been newly repaired and does not contain a charge, connect a cylinder of refrigerant, through a gauge manifold, to the process tube of the compressor and liquid line strainer. Open the valve on the cylinder and manifold and allow the pressure to build up within the system. Check for and handle leaks as described above. After the test has been completed, recover the test charge, evacuate the system, and recharge with clean refrigerant.

## BRAZING

Satisfactory results require cleanliness, experience and the use of proper material and equipment.

The connections to be brazed must be properly sized, free of rough edges and clean.

The generally accepted materials are:
SIL-FOS (Alloy of 15% silver, 80% copper, 5% phosphorus) is used without flux on copper to copper. DO NOT USE FOR A COPPER TO STEEL CONNECTION.

Recommended heat is approximately 1400°F.
SILVER SOLDER (Alloy of 30% silver, 38% copper, 32% zinc.) is used with fluoride base flux on copper to steel, brass to copper, steel to steel, brass to steel. Recommended heat is approximately 1200°F.

## EVACUATION

This is the most important part of the entire service procedure. The life and efficiency of the equipment is dependent upon the thoroughness exercised by the serviceman when evacuating air (non-condensables) and moisture from the system.

# SERVICING

Air in the system causes high condensing temperature and pressure, resulting in increased power input and reduced performance.

Moisture chemically reacts with the refrigerant and oil to form corrosive hydrofluoric and hydrochloric acids. These attack motor windings and parts, causing breakdown.
The equipment required to thoroughly evacuate the system is a high vacuum pump, capable of producing a vacuum equivalent to 50 microns, and a thermocouple vacuum gauge to give a true reading of the vacuum in the system.

**NOTE:** Never use the system compressor as a vacuum pump or run when under a high vacuum. Motor damage could occur.

1. Connect the vacuum pump, vacuum tight manifold set with high vacuum hoses, thermocouple vacuum gauge and charging cylinder.
2. Connect the low side line to the process tube of the compressor.
3. Connect the high side line to the process tube of liquid line strainer.
   **NOTE:** If either process tube is not long enough to receive the compression or flare fitting and still leave room for a pinch-off, swag the tube and braze in an extra length of tubing.
4. Start the vacuum pump and open shut off valve to the high vacuum gauge manifold only. After the compound gauge (low side) has dropped to approximately 29 inches of vacuum open the valve to the vacuum thermocouple gauge. See that the vacuum pump will bank-off to a minimum of 50 microns. A high vacuum pump can only produce a good vacuum if its oil is not contaminated.
5. If the vacuum pump is working properly, close the valve to the vacuum thermocouple gauge and open the high and low side valves or the high vacuum manifold set. With the valve on the charging cylinder closed, open the manifold valve to the cylinder.
6. Evacuate the system to at least 29 inches gauge before opening valve to thermocouple vacuum gauge.
7. Continue to evacuate to a minimum of 250 microns. Close valve pump and watch rate of rise. If vacuum does not rise above 1500 microns in three minutes, system can be considered properly evacuated.
8. If thermocouple vacuum gauge continues to rise and levels off at about 5000 microns, moisture and non-condensables are still present. If gauge continues to rise a leak is present. Repair and re-evacuate.
9. Close valve to thermocouple vacuum gauge and vacuum pump. Shut off pump and prepare to charge.

### CHARGING

Charge the system with the exact amount of refrigerant. Refer to the unit nameplate for the correct refrigerant charge. An inaccurately charged system will cause future problems.

1. When using an ambient compensated calibrated charging cylinder, allow liquid refrigerant only to enter the high side.
2. After the system will take all it will take, close the valve on the high side of the manifold.
3. Start the system and charge the balance of the refrigerant though the low side. Do not charge in a liquid form.
4. Close the low side valve on the manifold and pinch-off both process tubes. Remove the manifold set, crimp shut the open ends of the process tubes and braze.
5. Recheck for refrigerant leaks.

**NOTE:** Do not use a refrigerant other than that shown on the serial number identification plate.

All precautionary measures recommended by the refrigerant manufacturers and suppliers should be observed.

### LINE PIERCING VALVES

Line piercing valves may be used for diagnosis but are not suitable for evacuating or charging due to the minute holes pierced in the tubing.

Line piercing valves must not be left on the refrigerant system. The connection between the valve and the refrigerant tubing is not hermetically sealed and will eventually leak.

### OPEN LINES

During any processing of the refrigeration system the lines should never be left open to atmosphere since water vapor will enter and add to the problem of proper evacuation.

### OPERATING TEST

The final step in a successful repair is an accurate operating test. Follow the Cooling and Heating Performance tests provided to make sure the product is again performing to design standards.

Efficient operation is dependent on a balanced system. One of the most common reasons for inefficiency is the users failure to adequately clean the condenser thereby creating reduced air movement.

# SERVICING

### COOLING PERFORMANCE TEST THERMOMETERS

The following precautions are necessary in observing the thermometer readings in the cooling performance test.

1. Use two accurately calibrated refrigeration type thermometers or a thermocouple potentiometer.
2. Thermometers are affected by body heat or changes in air flow. Therefore, the thermometers must be secured in proper locations with masking tape, wire or other applicable retainers.
3. Readings should be observed without touching or moving the thermometers.

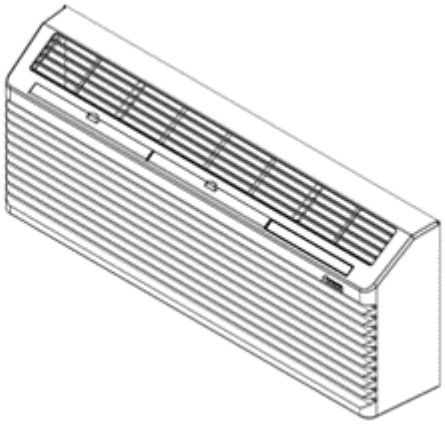

### SLING PSYCHROMETER

The sling psychrometer is used to obtain the wet bulb temperature in determining the percent relative humidity. To obtain the wet bulb  operate the sling psychrometer as follows:

Saturate the wick (only once during procedure of obtaining wet bulb readings) with clean water slightly below room temperature. Psychrometer reading should be acquired five to six feet in front of the unit and approximately four feet off the floor.

**NOTE:** Direct discharge airflow away from the sling psychrometer.

The cooling performance test should not be employed when outside temperatures are 20° below that of the room. Best results are obtained when the test is conducted under peak load conditions.

The air conditioner must operate at least 20 minutes on the High Cool position before testing.

### COOLING TEST

The following temperature must be recorded for the cooling performance test:

A. Dry bulb temperature of return air at conditioner. Locate thermometer as illustrated.
B. Dry bulb temperature of air leaving conditioner. Thermometer has to be located as illustrated.
C. The dry bulb thermometer temperature on the sling psychrometer should be plus or minus 1°F within reading obtained on thermometer in the return air. Check wet bulb temperature on sling psychrometer and record same.
D. After the wet bulb temperature, dry bulb temperature, and return air temperature have been recorded, proceed to calculate the temperature difference as follows.
E. Subtract temperature obtained in Step B from temperature obtained in Step A. The remainder temperature is used to calculate from the Cooling Range Chart.

**EXAMPLE:** Assume a PTH15 unit is under test and the temperature readings indicated below were obtained.

1. Return air D.B. temperature: 80°F, Step A.
2. Discharge air D.B. temperature: 69°F, Step B.
3. Return air, wet and dry bulb temperature as recorded in Step C: Dry Bulb 80°F, Wet Bulb 75°F.
4. In left hand column of Cooling Capacity Charge headed Dry Bulb, find the 80° value.
5. In column headed Wet Bulb find the 75°F value and find the value 8 -13 in the cooling range column under the Model “PTH153 PTH154”.

This data shows that the temperature of the air passing through the cooling coil is reduced at least 8°F but not more than 13°F. This example unit is operating normally for the existing conditions.

For the example unit under test, the temperature difference was 11°F (80°F, return air, minimum 69°F discharge air). Since the value is within the listed cooling range 8 - 13, this unit is considered to be operating normally.

For Total Power Input Test (wattage) the following additional readings must be recorded after the unit under test is interconnected with a wattmeter.

- Outdoor dry bulb temperature. Avoid direct exposure of thermometer to sunlight or to hot condenser discharge air.
- Total watts input, measured by wattmeter or calculate by multiplying applied voltage by unit amps.

### CALCULATING PROCEDURE

1. Locate the outdoor temperature obtained in first column of Total Power Consumption Cooling Chart.
2. Locate in second column the return air wet bulb temperature obtained in Step C.
3. The total watts input should come between minimum and maximum values indicated for each model.

# SERVICING

**EXAMPLE:** Assume that a PTH15 is again under test. Proceed as follows and observe test readings as simultaneously as possible.

1. Outdoor dry bulb temperature reading - 95°F.
2. Check watts input - 1510.
3. Wet bulb temperature as described in Step C - 75°F.

In column headed Outdoor Dry Bulb Temperature of the Power Consumption Chart find the 95°F value. Read to the right from the 95°F value and find the room wet bulb temperature (75°F).

Read to the right front the 75°F W.B. value in the PTH15 column and note the minimum and maximum wattage of 1460 - 1575.

Since the wattage reading (1510) obtained in the test is within the prescribed range, the total power input in watts is considered to be normal.

### ELECTRIC HEAT TEST

For the electric heat test, the following readings must be recorded after the unit is interconnected with a wattmeter or by recording the total amp draw to the unit.

**NOTE:** Cabinet front must be in place during this test.

- Record supply voltage to unit.
- Operate unit in highest heat setting.
- Record wattage recorded on wattmeter or total amp draw to unit.
- Refer to heating watts/amps chart. (Whichever is applicable for voltage rating on the unit being tested.)
- The total watts or amps recorded should fall within the minimum and maximum watts/amps listed on these charts.

**EXAMPLE:** Assume that a PTH15 230/208V with 3.5 kW electric heater is under test.

1. Supply voltage as recorded - 208 Volts.
2. Watts recorded -2750W or Amps recorded - 13.5 Amps.
3. Locate the readings listed on the following pages. You will note that these readings fall within the voltage, watts and amp draw minimum and maximum ranges listed and therefore the unit heating performance would be considered normal.

### HEATING POWER CONSUMPTION TEST (HEAT PUMP MODE ONLY)

For the total power consumption test, the following readings must be recorded after the unit is interconnected with a wattmeter.

- Outside coil inlet air dry bulb temperature.
- Inside coil inlet air dry bulb temperature.
- Total watts input measured by wattmeter.

### CALCULATING PROCEDURE

1. Locate temperature obtained in Step A in first column of Heating Wattage Chart.
2. Locate in second column the inside coil inlet D.B. temperature.
3. The total watts input should come between minimum and maximum values indicated for each model.

**EXAMPLE:** Assume that a PTH15 is under test.

Proceed as follows and observe test readings as simultaneously as possible.

1. Outside coil inlet D.B. temperature readings as described in Step A: 45°F.
2. Check watts input: 1370 W.
3. Inside coil inlet D.B. temperature reading as described in Step B: 75°F.

Read to the right from the 75°F inside coil inlet D.B. value in the column and note the minimum and maximum wattage of 1335 - 1470.

Since the wattage reading (1370) obtained in the test is within the prescribed range, the total power input in watts is considered to be normal.

See the charts on the following pages.

# SERVICING

| COOLING CHANGE OF TEMPERATURE - AIR CONDITIONERS | | | | | | | | | |
|---|---|---|---|---|---|---|---|---|---|
| Model | | PMC073 PTC073 | PMC074 PTC074 | PMC093 PTC093 | PMC094 PTC094 | PMC123 PTC123 | PMC124 PTC124 | PMC153 PTC153 | PMC154 PTC154 |
| Temperature | | Temperature Across Indoor Coil (ΔT) | Temperature Across Indoor Coil (ΔT) | Temperature Across Indoor Coil (ΔT) | Temperature Across Indoor Coil (ΔT) | Temperature Across Indoor Coil (ΔT) | Temperature Across Indoor Coil (ΔT) | Temperature Across Indoor Coil (ΔT) | Temperature Across Indoor Coil (ΔT) |
| Outside Coil Dry Bulb (ºF) | Room Wet Bulb (ºF) | | | | | | | | |
| | | Min | Max | Min | Max | Min | Max | Min | Max |
| 90 | 85 | 1 | 3 | 2 | 6 | 1 | 5 | 1 | 4 |
| | 80 | 6 | 11 | 10 | 15 | 9 | 13 | 8 | 13 |
| | 78 | 15 | 19 | 18 | 23 | 17 | 22 | 16 | 21 |
| | 70 | 23 | 28 | 27 | 31 | 25 | 30 | 24 | 29 |
| 85 | 80 | 3 | 8 | 7 | 11 | 5 | 10 | 5 | 9 |
| | 75 | 11 | 16 | 14 | 19 | 13 | 18 | 12 | 17 |
| | 70 | 18 | 23 | 22 | 26 | 20 | 25 | 20 | 24 |
| | 65 | 26 | 31 | 29 | 34 | 28 | 33 | 27 | 32 |
| 80 | 75 | 7 | 12 | 10 | 15 | 9 | 13 | 8 | 13 |
| | 70 | 14 | 18 | 17 | 21 | 15 | 20 | 15 | 19 |
| | 65 | 20 | 25 | 23 | 28 | 22 | 26 | 21 | 26 |
| | 60 | 27 | 31 | 30 | 34 | 28 | 33 | 28 | 32 |
| 75 | 70 | 9 | 14 | 12 | 17 | 10 | 15 | 10 | 15 |
| | 65 | 14 | 19 | 17 | 22 | 15 | 20 | 15 | 20 |
| | 60 | 19 | 24 | 22 | 27 | 20 | 25 | 20 | 25 |
| | 55 | 24 | 29 | 27 | 32 | 25 | 30 | 25 | 30 |
| 70 | 65 | 9 | 13 | 11 | 15 | 9 | 13 | 9 | 14 |
| | 60 | 13 | 17 | 15 | 19 | 13 | 17 | 13 | 18 |
| | 55 | 17 | 21 | 19 | 23 | 17 | 21 | 17 | 22 |

| COOLING CHANGE OF TEMPERATURE - HEAT PUMPS | | | | | | | | | |
|---|---|---|---|---|---|---|---|---|---|
| Model | | HEH073 PMH073 PTH073 | HEH074 PMH074 PTH074 | HEH093 PMH093 PTH093 | HEH094 PMH094 PTH094 | HEH123 PMH123 PTH123 | HEH124 PMH124 PTH124 | HEH153 PMH153 PTH153 | HEH154 PMH154 PTH154 |
| Temperature | | Temperature Across Indoor Coil (ΔT) | Temperature Across Indoor Coil (ΔT) | Temperature Across Indoor Coil (ΔT) | Temperature Across Indoor Coil (ΔT) | Temperature Across Indoor Coil (ΔT) | Temperature Across Indoor Coil (ΔT) | Temperature Across Indoor Coil (ΔT) | Temperature Across Indoor Coil (ΔT) |
| Outside Coil Dry Bulb (ºF) | Room Wet Bulb (ºF) | | | | | | | | |
| | | Min | Max | Min | Max | Min | Max | Min | Max |
| 90 | 85 | 1 | 3 | 2 | 6 | 1 | 5 | 1 | 4 |
| | 80 | 6 | 11 | 10 | 15 | 9 | 13 | 8 | 13 |
| | 78 | 15 | 19 | 18 | 23 | 17 | 22 | 16 | 21 |
| | 70 | 23 | 28 | 27 | 31 | 25 | 30 | 24 | 29 |
| 85 | 80 | 3 | 8 | 7 | 11 | 5 | 10 | 5 | 9 |
| | 75 | 11 | 16 | 14 | 19 | 13 | 18 | 12 | 17 |
| | 70 | 18 | 23 | 22 | 26 | 20 | 25 | 20 | 24 |
| | 65 | 26 | 31 | 29 | 34 | 28 | 33 | 27 | 32 |
| 80 | 75 | 7 | 12 | 10 | 15 | 9 | 13 | 8 | 13 |
| | 70 | 14 | 18 | 17 | 21 | 15 | 20 | 15 | 19 |
| | 65 | 20 | 25 | 23 | 28 | 22 | 26 | 21 | 26 |
| | 60 | 27 | 31 | 30 | 34 | 28 | 33 | 28 | 32 |
| 75 | 70 | 9 | 14 | 12 | 17 | 10 | 15 | 10 | 15 |
| | 65 | 14 | 19 | 17 | 22 | 15 | 20 | 15 | 20 |
| | 60 | 19 | 24 | 22 | 27 | 20 | 25 | 20 | 25 |
| | 55 | 24 | 29 | 27 | 32 | 25 | 30 | 25 | 30 |
| 70 | 65 | 9 | 13 | 11 | 15 | 9 | 13 | 9 | 14 |
| | 60 | 13 | 17 | 15 | 19 | 13 | 17 | 13 | 18 |
| | 55 | 17 | 21 | 19 | 23 | 17 | 21 | 17 | 22 |

# SERVICING

### DIGITAL BOARD DIAGNOSTICS

If a failure is detected on the digital board, there will be a green light constantly lit up. This light is located under the OFF touch pad button. The board will need to enter in the Diagnostic Mode to determine failure code and procedures to follow to correct problem.

### DIAGNOSTIC MAINTENANCE & STATUS REPORT

The Diagnostic Maintenance & Status Report Mode provides detailed information on PTAC control operation and operational status including present modes, failures, airflow restriction warnings, operating temperatures, and past failures. The lower right hand dot on the center display flashes in this mode. In some cases the green LED located in the lower left hand corner of the touchpad below the OFF key will also be lit. This Green LED “Status Light“ only illuminates if there is an status code that has been activated and should be reviewed. In most cases, this light indicates that the indoor room filter is dirty should be cleaned or replaced.

**NOTE:** Dirty filters cause the unit to consume more energy than normally needed to condition a room. Once the filter has been cleaned or replaced, the LED should go out. If the LED is still illuminated after the filter has been cleaned, activate the Diagnostic and Status mode to view any active codes. The unit may need additional cleaning or maintenance of the evaporator or condenser coils. Please perform this step before calling a servicer. A servicer should be called only if cleaning the filter or coils does not clear the status code or the code indicates that servicer should be called.

### DIAGNOSTIC STATUS REPORT MODE

Refer to the diagnostic flash codes on the following page.

# SERVICING

| CODE | Status LED (Red/Green) | Wireless LED (BLUE) | Status / Issue | Priority | Logged | Notes |
|---|---|---|---|---|---|---|
| A1 | Flashing Green-L | n/a | Alarm (NO) on IN1 or IN2 Terminal | 146 | Y | |
| A2 | Flashing Green-L | n/a | Alarm (NC) on IN1 or IN2 Terminal | 145 | Y | |
| br | Flashing Red-LS^5 | n/a | Brown out | 2 | N | |
| C1 | Flashing Red-LS^2 | n/a | Hyd coil freeze protection | 51 | Y | |
| C2 | Flashing Green-LS^2 | n/a | Indoor recirculation | 63 | Y | |
| C3 | | | Legacy - Refrigeration issue | obs | | |
| C4 | Flashing Red-LS^2 | n/a | Frozen ID coil | 13 | Y | |
| C5 | Flashing Green-LS^2 | n/a | Outdoor recirculation | 64 | Y | |
| C7 | | | Legacy - Frozen ID coil | obs | | |
| d4 | | | Legacy - DC Motor Control Issue | obs | | |
| d5 | Flashing Red-LS^3 | n/a | OD DC Motor Issue | 6 | Y | |
| d6 | Flashing Red-LS^3 | n/a | ID Blower Motor Issue | 7 | Y | |
| dL | Flashing Red-LS^4 | n/a | DDT Sensor Loose | 24 | Y | Contact technical support for further diagnostics |
| Ec | Flashing Red-LS^6 | n/a | Relay Configuration Error | 4 | Y | |
| EH | Flashing Green-LS^2 | n/a | Emergency Hydronic | 83 | N | |
| Eo | Flashing Red-LS^6 | n/a | Service Board | 5 | N | |
| F- | | | Legacy - IAT on ID RH Sensor bad | obs | | |
| F1 | Flashing Red-LS^4 | n/a | IAT & RIAT Sensor bad | 8 | Y | |
| F2 | Flashing Red-LS^4 | n/a | T-stat Sensor bad | 25 | N | |
| F3 | Flashing Red-LS^4 | n/a | IAT Sensor bad | 30 | Y | |

# SERVICING

| CODE | Status LED (Red/Green) | Wireless LED (BLUE) | Status / Issue | Priority | Logged | Notes |
|---|---|---|---|---|---|---|
| F4 | Flashing Red-LS^4 | n/a | ICT Sensor bad | 31 | Y | |
| F5 | Flashing Red-LS^4 | n/a | Wireless device signal loss | 26 | Y | |
| F6 | Flashing Red-LS^4 | n/a | IDT Sensor bad | 32 | Y | |
| F7 | Flashing Red-LS^4 | n/a | OCT Sensor bad | 33 | N | |
| F8 | Flashing Red-LS^4 | n/a | OAT Sensor bad | 34 | N | |
| F9 | Flashing Red-LS^4 | n/a | CDT Sensor bad (old IHD) | 35 | N | |
| FE | Flashing Red-LS^4 | n/a | CST Sensor Bad | 36 | N | |
| FA | | | Legacy M90 | obs | | |
| Fb | Flashing Red-LS^4 | n/a | Low Battery | 27 | Y | |
| FC | Flashing Red-LS^4 | n/a | DST Sensor bad | 37 | N | Replace the Digiair suction Thermistor |
| Fd | Flashing Green-LS^1 | n/a | Front Desk | 80 | N | |
| FF | Flashing Red-LS^7 | n/a | DigiAir Filter Warning | 149 | Y | Contact technical support for further diagnostics |
| FH | Flashing Red-LS^4 | n/a | DDT Sensor bad | 38 | N | Replace the Digiair Discharge Thermistor |
| Fh | Flashing Red-LS^4 | n/a | OD %RH Sensor bad | 39 | N | Replace the Humidity Sensor |
| Fo | Flashing Red-LS^4 | n/a | DOAT on OD RH Sensor bad | 40 | N | Replace the Humidity Sensor |
| Fp | Flashing Green-LS^1 | n/a | Room Freeze Protection | 85 | N | |
| Fr | | | Legacy - ID %RH Sensor bad | obs | | |
| H1 | Flashing Red-LS^5 | n/a | High Voltage | 3 | Y | |
| H2 | Flashing Green-LS^2 | n/a | Hot compressor discharge | 87 | Y | |
| H4 | Flashing Red-LS^2 | n/a | Hot compressor discharge | 11 | Y | |

# SERVICING

| CODE | Status LED (Red/Green) | Wireless LED (BLUE) | Status / Issue | Priority | Logged | Notes |
|---|---|---|---|---|---|---|
| HA | Flashing Red - LS^7 | n/a | DigiAir discharge hot | 136 | Y | Contact technical support for further diagnostics |
| Hc | | | Legacy - Hyd coil freeze protection | obs | | |
| HF | | | Legacy - Hyd heat deficiency | obs | | |
| HP | Flashing Green- LS^1 | n/a | Room Heat Protection | 86 | N | |
| L3 | Flashing Red- LS^2 | n/a | Frosting indoor coil | 50 | Y | |
| L4 | Flashing Red- LS^2 | n/a | Too hot indoor coil in heat | 12 | Y | |
| L5 | Flashing Green- LS^1 | n/a | Load Shedding | 82 | N | |
| L6 | Flashing Red- LS^2 | n/a | Electric discharge too hot | 10 | Y | |
| L7 | | | Legacy M90 | obs | | |
| L9 | Flashing Red - LS^7 | n/a | DigiAir Overload Protector Fault | 15 | Y | Contact technical support for further diagnostics |
| LC | Flashing Red- LS^2 | n/a | OD Coil Hot Lockout | 14 | Y | |
| LE | Flashing Green- LS^1 | n/a | OD Coil Frosted Lockout | 88 | N | |
| LF | Flashing Green- LS^1 | n/a | OD Coil Frost Lockout | 89 | N | |
| LH | Flashing Red- LS^6 | n/a | (C3) Configuration Error | 16 | Y | |
| oP | Flashing Green- LS^1 | n/a | Open door lockout | 81 | N | |
| rC | Flashing Green- L | n/a | Wireless Twinned Control | 148 | N | |
| Ur | Flashing Green- LS^1 | n/a | Unrented Room | 84 | N | |
| --- | Flashing Red- LS | n/a | Program error | 1 | N | |
| --- | Flashing Green- L | n/a | Error Free | 150 | N | |

# SERVICING

| Complaint | No Heat | | | | | | | Unsatisfactory Cooling | | | | | System Operating Pressures | | | | Test Method Remedy | See Service Procedure Reference |
|---|---|---|---|---|---|---|---|---|---|---|---|---|---|---|---|---|---|---|
| POSSIBLE CAUSE<br>DOTS IN ANALYSIS GUIDE INDICATE "POSSIBLE CAUSE"<br>SYMPTOM | System Will Not Start | Compressor will not start - fan runs | Compressor and Condenser Fan will not start | Evaporator fan will not start | Condenser fan will not start | Compressor runs - goes off on overload | Compressor cycles on overload | System runs continuously - little cooling | Too cool and then too warm | Not cool enough on warm days | Certain areas too cool others, too warm | Compressor is noisy | Low suction pressure | Low head pressure | High Suction Pressure | High head pressure | | |
| Power Failure | ● | | | | | | | | | | | | | | | | Test Voltage | S-1 |
| Blown Fuse | ● | | ● | ● | | | | | | | | | | | | | Impact Fuse Size & Type | |
| Loose Connection | ● | | | ● | | ● | | | | | | | | | | | Inspect Connection - Tighten | S-2 |
| Shorted or Broken Wires | ● | ● | ● | ● | ● | ● | | | | | | | | | | | Test Circuits With Ohmmeter | S-3 |
| Open Overload | ● | ● | | ● | ● | | | | | | | | | | | | Test Continuity of Overloads | S-17A |
| Faulty Thermostat | ● | | | ● | | | | | ● | | | | | | | | Test Continuity of Thermostat & Wiring | S-3 |
| Shorted or Open Capacitor | | ● | | | ● | ● | | | | | | | | | | | Test Capacitor | S-15 |
| Internal Overload Open | ● | | | | | | | | | | | | | | | | Test Continuity of Overload | S-6 |
| Shorted or Grounded Compressor | | ● | | | | ● | | | | | | | | | | | Test Motor Windings | S-17 |
| Compressor Stuck | ● | | | | | ● | | | | | | | | | | | Use Test Cord | S-17 |
| Open Control Circuit | | | | ● | | | | | | | | | | | | | Test Control Circuit with Voltmeter | S-1 |
| Low Voltage | | ● | | | | ● | ● | | | | | | | | | | Test Voltage | S-1 |
| Faulty Evap or Cond. Fan Motor | | | | ● | | | | | | | | | ● | | | | Repair or Replace | S-16 |
| Shorted or Grounded Fan Motor | | | | | ● | | | | | | | | | | | ● | Test Motor Windings | S-16 |
| Shortage or Refrigerant | | | | | | | ● | ● | | | | | ● | ● | | | Test for Leaks, Replace Drier | S-1, S-2 |
| Restructed Liquid Line | | | | | | | ● | ● | | | | | ● | ● | | | Replace Restricted Part | |
| Dirty Air Filter | | | | | | | | ● | | ● | ● | | ● | | | ● | Inspect Filter - Clean or Replace | |
| Dirty Indoor Coil | | | | | | | | ● | | ● | ● | | ● | | | ● | Inspect Coil - Clean | |
| Airflow Across Coils | | | | | | | | | | | | | | | ● | | Check Motor Operation | |
| Overcharge of Refrigerant | | | | | | ● | ● | | | | | | | | ● | ● | Recover & Replace Cap Tube | S-116 |
| Dirty Outdoor Coil | | | | | | ● | ● | | | ● | | | | | | ● | Inspect Coil - Clean | |
| Noncondensibles | | | | | | | ● | | | ● | | | | | | ● | Remove Charge, Replace Cap Tube | S-1, S-2 |
| Recirculation of Condensing Air | | | | | | | ● | | | ● | | | | | | ● | Remove Obstruction to Air Flow | |
| Infiltration of Outdoor Air | | | | | | | | ● | | ● | ● | | | | | | Check Windows, Doors, Vent Fans, etc. | |
| Improperly Located Thermostat | | | | | | ● | | | ● | | | | | | | | Relocate Thermostat | |
| System Undersized | | | | | | | | ● | | ● | | | | | | | Refigure Cooling Load | |
| Broken Internal Parts | | | | | | | | | | | | ● | | | | | Replace Compressor | S-17 |
| Broken Values | | | | | | | | | | | | ● | | | | | Test Compressor Efficiency | S-104 |
| Inefficient Compressor | | | | | | | | ● | | | | | | ● | ● | | Test Compressor Efficiency | S-104 |

# SERVICING

### CHECKING VOLTAGE

1. Using a voltmeter, measure the voltage across terminals L1 and L2 of the outlet.
2. No reading - indicates open wiring, open fuse(s), no power or etc. from the unit to fused disconnect service. Repair as needed.

### CHECKING THERMOSTAT, WIRING AND ANTICIPATOR

1. Visually inspect all the wires.
2. Check wires for loose connections (tighten as needed or replace Terminal if needed).
3. Check wires for pinched or cut wires.

With power ON and thermostat calling for cooling.

1. Use a voltmeter to check for 24 volts at thermostat wires C and R on the terminal strip of the control board.
2. No voltage indicates trouble in the thermostat, wiring or external transformer source.
3. Check the continuity of the thermostat and wiring. Repair or replace as necessary.

### INDOOR AMBIENT THERMISTOR

1. Remove the front cover.
2. The thermistor is on the front of the unit and plugs in the lower right corner of the board. Unplug the thermistor from the board.
3. Check continuity between the thermistor wires, see chart for resistance and temperature ranges. If out of range replace the thermistor.

### INDOOR COIL THERMISTOR

See following page for resistance/temperature

1. Remove front cover.
2. Remove the two mounting screws, one on each side of the control board cover. Tilting the control panel out, remove the cover.
3. Disconnect the red thermistor from the control board's ICT Red CONNECTOR.
4. Check continuity between the thermistor wires, see chart for resistance and temperature ranges. If out of range replace the thermistor.
5. To replace the indoor coil thermistor remove the access plate shown in picture below to gain access to the thermistor. Thermistor goes through the side panel into control board compartment.

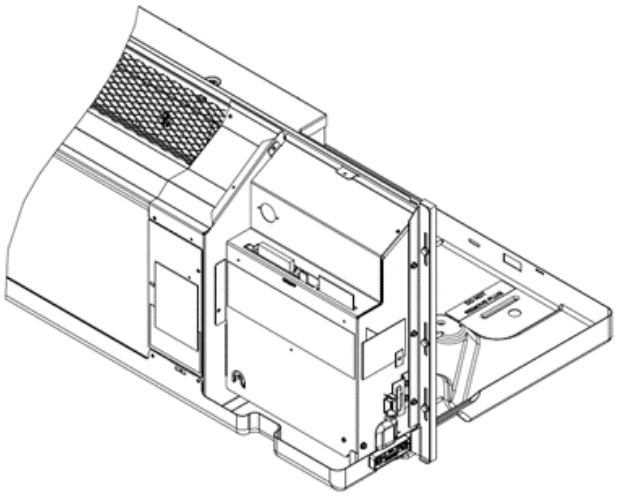

### OUTDOOR COIL THERMISTOR

1. Remove chassis from wall sleeve.
2. Remove the two mounting screws, one on each side of the control board cover. Tilting the control panel out.
3. Unplug the Blue Thermistor from the connector.
4. Unclip thermistor from outdoor coil.
5. Carefully slide thermistor wiring through the center partition. When replacing, be sure all holes in the center partition are properly sealed with Permagum.

# SERVICING

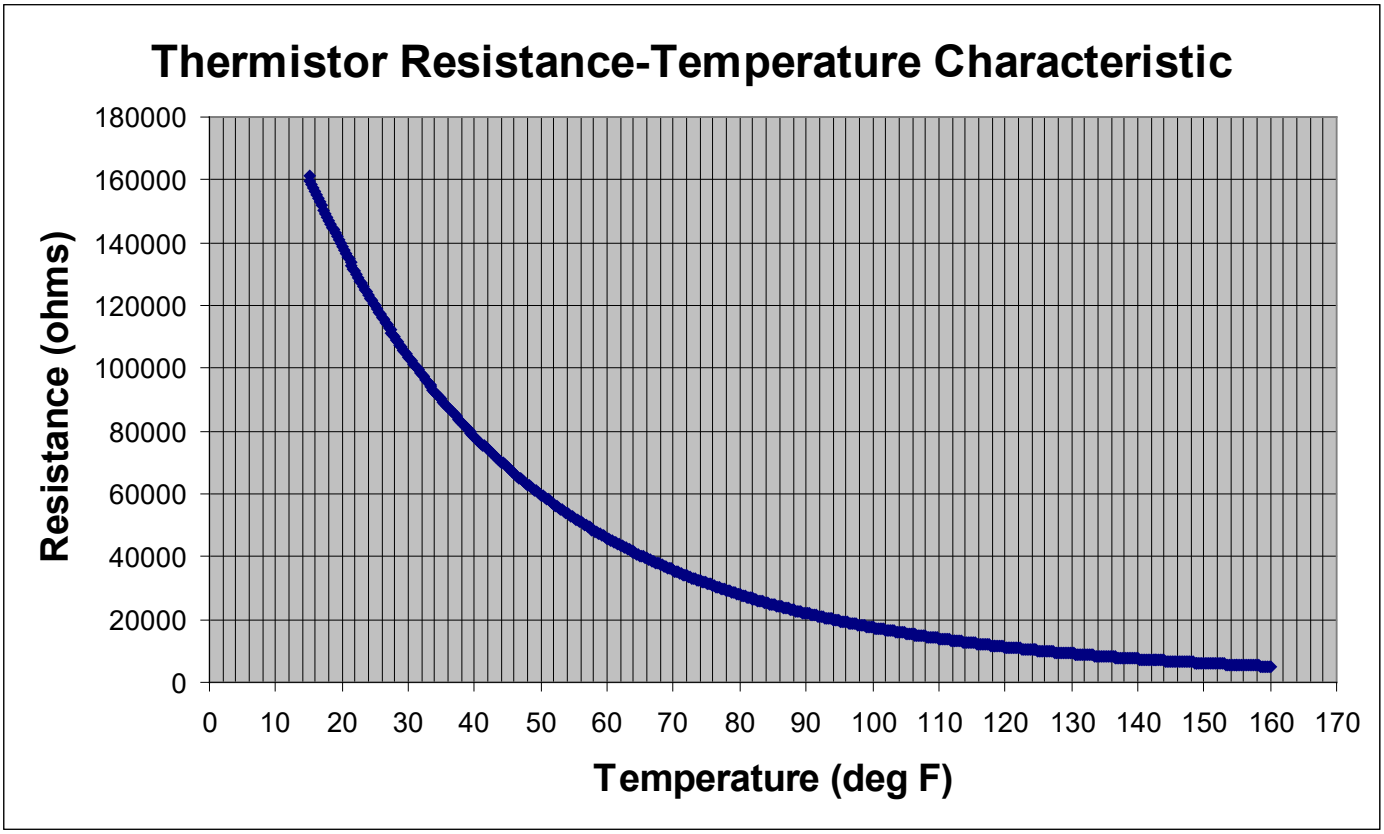


**Chart applies to black, red, blue, yellow and green wires; it does not apply to orange wires.**

### CHECKING OCT THERMISTOR

1. With power off, remove the thermistor leads from the circuit board.
2. Check the thermistor for continuity. See chart above for resistance values.
3. Replace thermistor if it does not test as above.

### HEATER ASSEMBLY

1. Disconnect power to the unit
2. Remove front cover of unit.
3. Remove the three screws securing the indoor fan motor cover and remove the cover. See Figure A.
4. Remove the 8 screws securing the partition panel top to the chassis, Figure A.
5. Remove the 2 screws securing the two tie braces to the partition panel. See Figure A.
6. Remove the partition panel top
7. Remove the 4 screws on the top of the evaporator, Figure A.

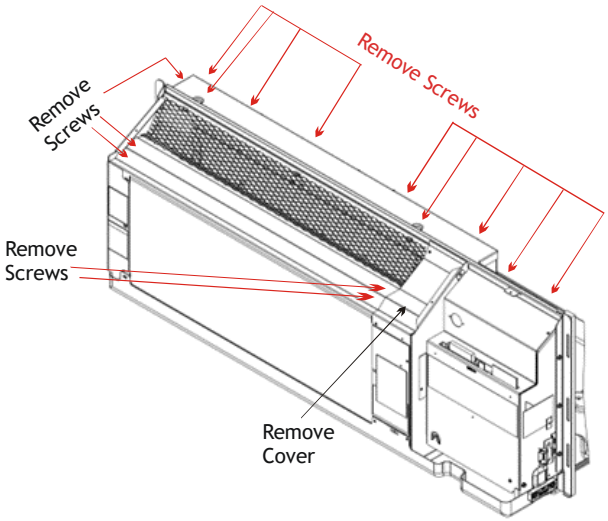


**FIGURE A**

8. Remove the two screws on the left side panel securing the motor panel assembly, Figure B.

# SERVICING

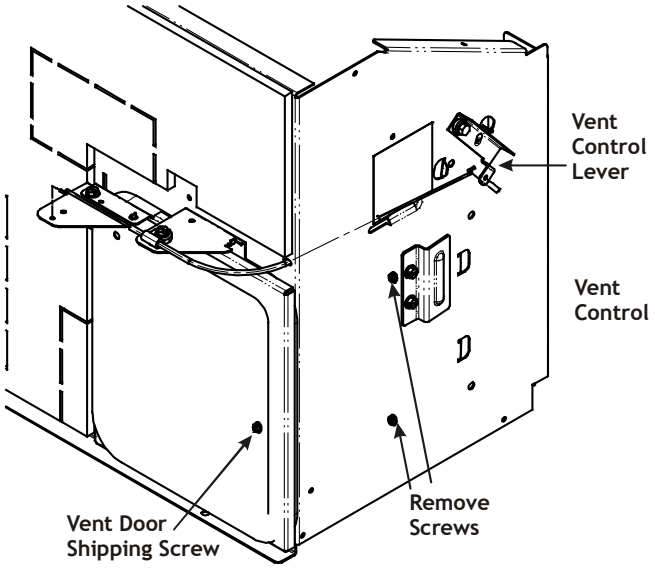


FIGURE B

9. Lift up on the right side of the fan motor assembly to release the housing.
10. Slide whole assembly to the right as you are looking at it and lift the assembly straight up.
11. Remove the two screws securing the heater assembly, Figure C.
12. Remove heater assembly and disconnect wires from the heater.

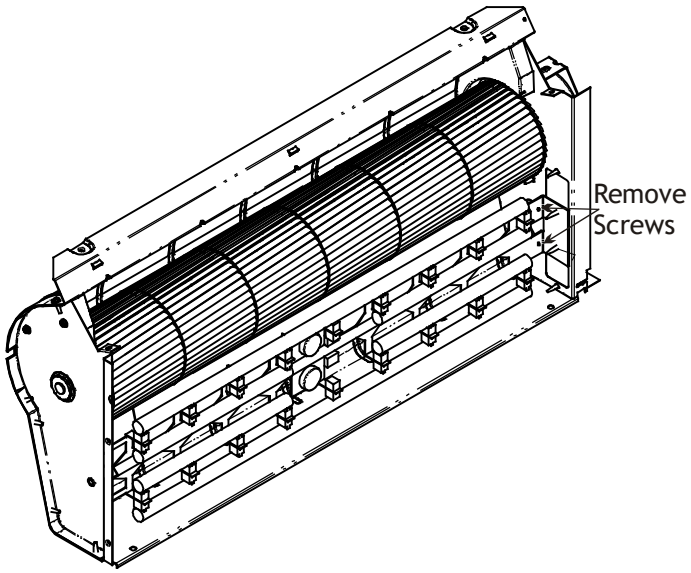


FIGURE C

### CHECKING HEATER ASSEMBLY

1. With power off to the unit and heater, remove the heaters in question and visually inspect the element for broken condition.
2. Remove the wires from the element and check for continuity through the heater. If there is no continuity the heater needs to be replaced.

### DRAIN PAN VALVE (HEAT PUMP MODELS ONLY)

1. Remove the chassis from the wall sleeve.
2. Remove the mounting screw and remove the drain valve.

The drain pan operates to remove condensate from base pan. This is a thermal operated device that opens at 40°F and closes at 60°F.

### CHECKING OPERATION OF THE DRAIN VALVE

1. Cool the valve to 40°F or below and the plunger should open.
2. Warm the valve up to 60°F and the plunger should close.

### CAPACITOR CHECK

1. Remove front cover.
2. Remove the two mounting screws, one on each side of the control board cover. Tilting the control panel out, disconnect ribbon connector from control board. DO NOT PULL ON RIBBON. GRASP THE BLACK RIBBON CONNECTOR AND PULL GENTLY.
3. Disconnect all wiring to the capacitor. Label the wires to ensure proper reassembly.
4. Remove the screw securing the capacitor mounting clamp to the center partition. Remove the capacitor.

### RESISTANCE CHECK

Discharge capacitor and remove wire leads.

# SERVICING

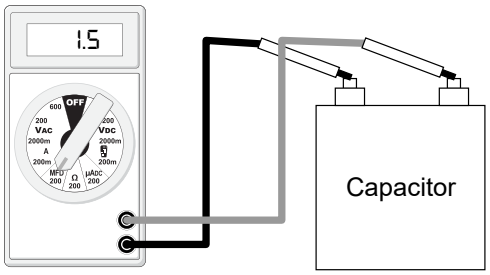


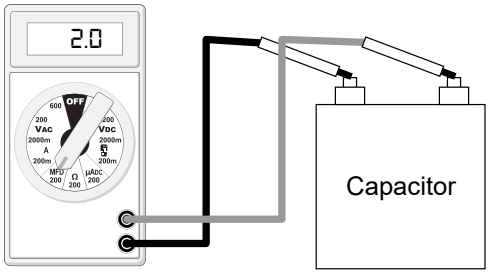


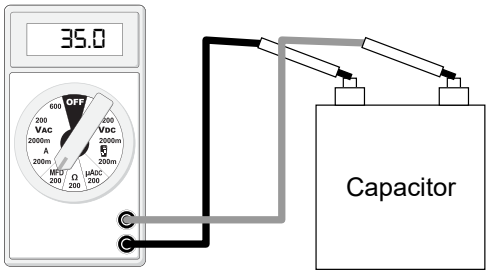


## CAPACITOR RESISTANCE TEST

A. Good Condition - indicator swings to zero and slowly returns to infinity. (Start capacitor with bleed resistor will not return to infinity. It will still read the resistance of the resistor).
B. Shorted - indicator swings to zero and stops there - replace.
C. Open - no reading - replace. (Start capacitor would read resistor resistance).

1. Testing for ohms between either capacitor terminal and the capacitor body must show infinite ohms.

## CAPACITANCE CHECK

Using a hookup as shown below, take the amperage and voltage readings and use them in the formula:

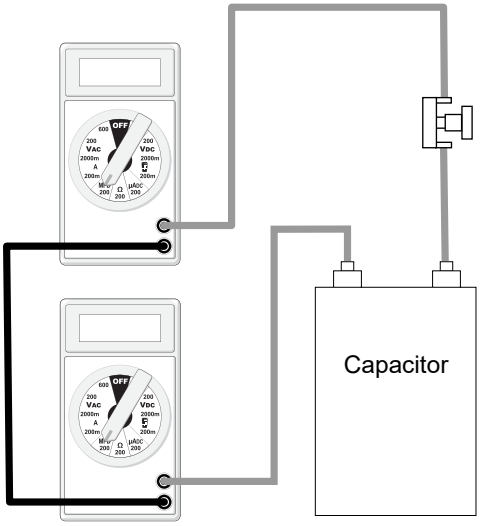


**CAPACITANCE (MFD) = 2650 X AMPERAGE**
**VOLTAGE**

If the value obtained is not within 10% of the rating printed on the capacitor, replace.

## CHECKING FAN AND MOTOR BLOWER WINDINGS

Blower Wheel, Blower Motor, Fan Blade

1. Disconnect power to the unit.
2. Remove front cover of unit.
3. Remove the three screws securing the indoor fan motor cover and remove the cover. See Figure D.
4. Remove the 8 screws securing the partition panel top to the chassis, Figure D.
5. Remove the 2 screws securing the two tie braces to the partition panel. See Figure D.
6. Remove the partition panel top
7. Remove the 4 screws on the top of the evaporator, Figure D.

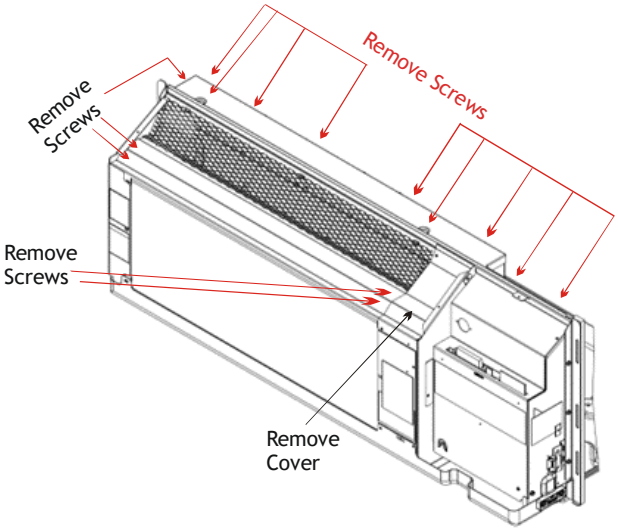


**FIGURE D**

8. Remove the two screws on the left side panel securing the motor panel assembly, Figure E.

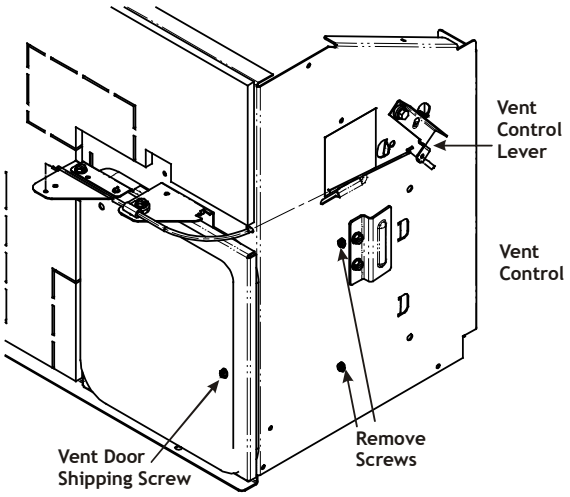


FIGURE E

9. Remove the partition panel top.
10. Remove the 4 screws on the cut off (top of the evaporator) and remove, Figure F.
11. Remove the two screws on the left side panel securing the motor panel assembly. See Figure F.

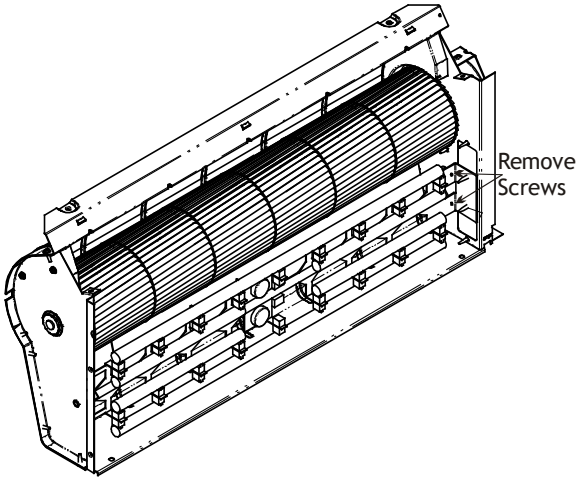


FIGURE F

12. Lift up on the right side of the fan motor assembly to release the housing.
13. Slide the assembly to the right as you are looking at it, and lift the assembly straight up.
14. Loosen the set screw on the blower wheel
15. Remove the three screws securing the motor to the housing and remove the motor from the blower wheel.
16. Disconnect the blower motor wiring as follows:
    White from capacitor C terminal
    Red from control board FAN LOW terminal
    Brown from capacitor FAN terminal
    Black from control board FAN HIGH terminal
    Gently pull the wire through the center partition

The auto reset fan motor overload is designed to protect the motor against high temperature and high amperage conditions by breaking the common circuit within the motor, similar to the compressor internal overload. However, heat generated within the motor is faster to dissipate than the compressor, allow at least 45 minutes for the overload to reset, then retest.

1. Remove the motor leads from their respective connection points and capacitor (if applicable).
2. Check the continuity between each of the motor leads.
3. Touch one probe of the ohmmeter to the motor frame (ground) and the other probe in turn to each lead.

If the windings do not test continuous or a reading is obtained from lead to ground, replace the motor.

### COMPRESSOR WINDINGS

1. Remove the chassis from the wall sleeve.
2. Remove the compressor terminal cap and disconnect all compressor wiring.
3. After capturing the refrigerant from the system, debraze the inlet and discharge tubing from the compressor.
4. Remove the three foot mounting bolts and remove the compressor.

If the test indicates shorted, grounded or open windings, see procedure for the next steps to be taken.

### RESISTANCE TEST

1. With no power, remove the leads from the compressor terminals.
2. Touch the leads of an ohmmeter to terminals C-S, start windings and C-R, run winding.

### GROUND TEST

With no power and compressor leads removed:
Set an ohmmeter on its highest scale. Touch one lead to the compressor body (clean point of contact, as a good connection is a must) and the other probe to each compressor terminal in turn. If a reading is obtained, then the compressor is grounded and must be replaced.

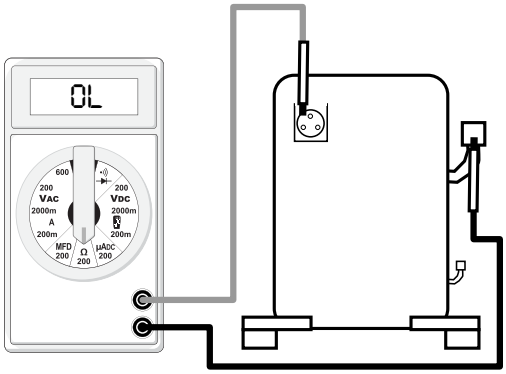

# SERVICING

### COMPRESSOR GROUND TEST

If the voltage, capacitor, overload and motor windings test fail to show the cause for failure.

With no power, wire a test cord to line voltage (L1 & L2).

**NOTE:** The wire size of the test cord must equal the line size, and the fuses in the test line must be of the proper size and type.

### TEST CORD CONNECTIONS

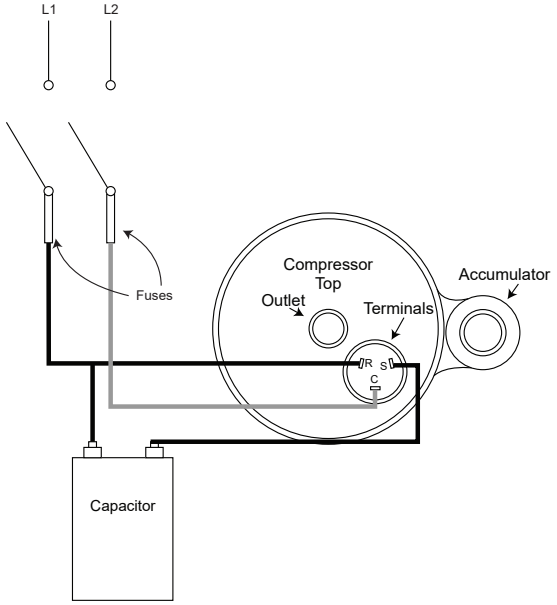


1. Connect a good capacitor of the right MFD and voltage rating into the circuit as shown.
2. Carefully apply line voltage.
   A. If the compressor starts and continues run, the cause for failure is somewhere else in the system.
   B. If the motor fails to start - replace.

Since all single phase compressors are of the permanent split capacitor design the high and low side pressure must be approximately equal or the low torque compressor may not start.

### OVERLOAD

Each compressor is equipped with an internal overload. The line break internal overload senses both motor amperage and winding temperature. High motor temperature or amperage heats the disc causing it to open, breaking the common circuit within the compressor. Fuse, circuit breaker, ground fault protective device, etc. has not tripped.

1. With no power to the unit, remove the compressor cover, and overload lead from the compressor terminal.
2. Using an ohmmeter: Test continuity between terminals of the overload. If not continuous, the overload is open, replace the overload.

### CHECKING COMPRESSOR EFFICIENCY

The reason for compressor inefficiency is broken or damaged suction and/or discharge valves, or scroll flanks on Scroll compressors, reducing the ability of the compressor to pump refrigerant vapor.

The condition of the valves or scroll flanks is checked in the following manner.

1. Attach gauges to the high and low side of the system.
2. Start the system and run a “Cooling Performance Test".

If the test shows:

A. Below normal high side pressure.
B. Above normal low side pressure.
C. Low temperature difference across coil.
D. Low amp draw at compressor.

and the charge is correct. The compressor is faulty - replace the compressor. **NOTE:** THIS TEST CANNOT BE DONE IN THE HEATING MODE.

### FILTER DRIER REPLACEMENT

1. Remove the two screws securing the front. Not all installations have the screws. Then remove the front. Do this by pulling the bottom corners out and lifting up.

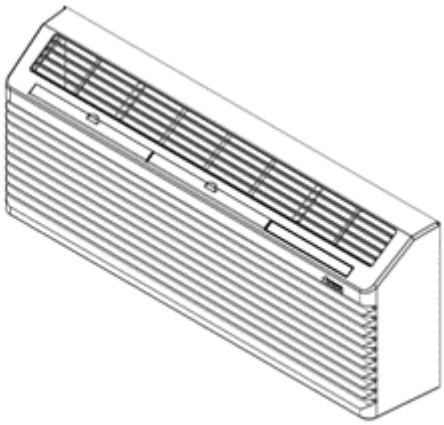

2. Remove the six screws securing the unit to the wall sleeve. If screws are not present they should be installed when units is reinstalled.
3. Pull unit from wall sleeve and take unit to adequate work area. Taking care not to spill any condensate which may still be in the basepan.
   **IMPORTANT NOTE:** Effective July 1,1992. Before opening any refrigerant system it is the responsibility of the service technician to capture the refrigerant for safe disposal.
4. After all the refrigerant has been recovered from the system, remove bottom of strainer by unbrazing the strainer from the condenser elbow. Hold the strainer with a pair of pliers while heating up the brazed joint with a torch. When joint is hot pull up on strainer and remove.
   Heat up Capillary tube and remove from line.

# SERVICING

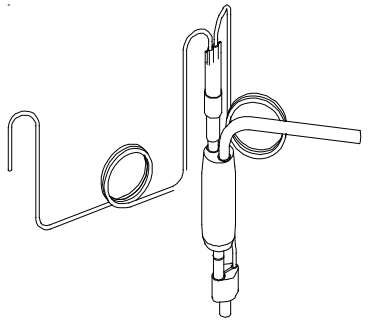

5. To install the new filter drier assembly, remove the end plugs and clean the ends to be brazed into place.
6. Clean the end of the capillary tube and insert into the tube, it may be necessary to crimp tubing around the capillary tube, being careful not to damage the capillary tube. Insert the bottom of the filter drier into the condenser elbow, it may be necessary to heat slightly to get coupling to go into place.

**BRAZING**
Satisfactory results require cleanliness, experience and the use of proper material and equipment.

The connections to be brazed must be properly sized, free of rough edges and clean.

The generally accepted materials are:
- SIL-FOS (Alloy of 15% silver, 80% copper, 5% phosphorus) is used without flux on copper to copper. DO NOT USE FOR A COPPER TO STEEL CONNECTION. Recommended heat is approximately 1400°F.
- SILVER SOLDER (Alloy of 30% silver, 38% copper, 32% zinc) is used with fluoride base flux on copper to steel, brass to copper, steel to steel, brass to steel. Recommended heat is approximately 1200°F. This is the most important part of the entire service procedure.

7. Braze coupling and cap tube into place.

**REVERSING VALVE**
Occasionally the reversing valve may stick in the heating or cooling position or in the mid-operation.

When stuck in the mid-position, part of the discharge gas from the compressor is directed back to the suction side resulting in excessively high suction pressure.

Check the operation of the valve by starting the system and switching the operation from COOLING to HEATING and then back to COOLING.

If the valve fails to change its position, test the voltage (230 V. or 265 V.) at the valve coil connector cap, while the system is on the HEATING CYCLE.

If no voltage is registered to the coil, check the operation of the reversing relay and the continuity of the connecting wires.

If voltage is registered at the coil, tap the valve body lightly while switching the system from HEATING to COOLING etc. If this fails to cause the valve to switch position, remove the coil connector cap and wiring and test the continuity of the valve coil. If the coil does not test continuous replace it.

If the valve is inoperative, replace.

**SOUND LEVEL**
Noise complaints are frequently caused by a faulty installation or by the customer's lack of knowledge and information. Sources of actual noise may be traced to operational components, tubing vibration, or misalignment of case or sleeve with chassis.

**COMPONENT REPLACEMENT**
Replacement of the compressor, evaporator, condenser, capillary tubes and reversing valve must be in accordance with accepted service practices. These procedures include a complete evacuation of both high and low sides, and changing of both strainer whenever the refrigerant system is opened.

Before replacing a component in the sealed system, make sure that the cause for complaint does not lie in the electrical circuit, control, overload or is due to some other reason. The serviceman must be familiar with the operational characteristics of the product and should not jump to conclusions.

**FRONT COVER**
1. Remove the two screws securing the front to the chassis.

**NOTE:** Not all installations will use these screws.

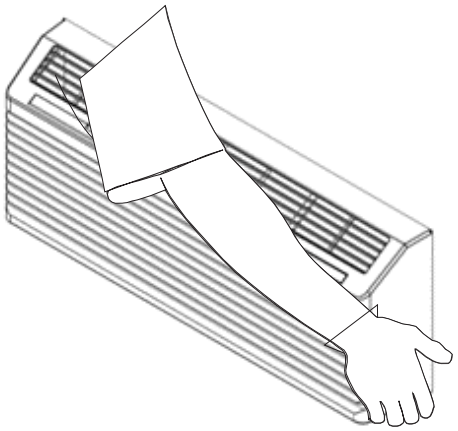

2. Grasp the cabinet front as shown.

# SERVICING

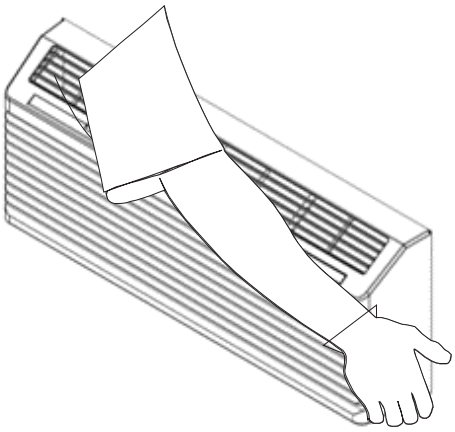

3. Pull the bottom of the cabinet front away from the chassis until the retaining clips disengage.

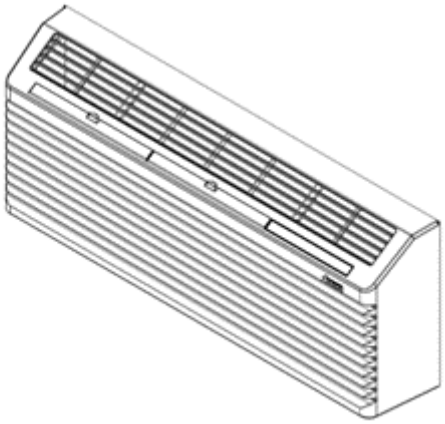

4. Lift the cabinet front off the chassis. Reverse this procedure to reinstall the cabinet front.

**CHASSIS**

1. Disconnect power to the unit.
2. Remove the front cover.
3. Remove three screws on each side of the chassis, securing the chassis to the wall sleeve.
4. Carefully slide chassis out of wall sleeve, placing on floor or protected cart.

**ESCUTCHEON, CONTROL BOARD, CONTROL PANEL**

1. Remove front cover.
2. Remove the two mounting screws, one on each side of the control board cover. Tilting the control panel out, disconnect ribbon connector from control board. DO NOT PULL ON RIBBON. GRASP THE BLACK RIBBON CONNECTOR AND PULL GENTLY.
3. Disconnect all wiring to the control board. Label the wires to ensure proper reassembly.
4. Remove the thermistor in front of the evaporator.
5. Remove the four control board mounting screws and remove the control board.

**OUTDOOR COIL**

1. Remove the chassis from the wall sleeve.
2. After capturing the refrigerant from the system, debraze the inlet and discharge tubing from the outdoor coil.
3. Remove all screws from the sides of the outdoor coil securing the shroud to the coil.
4. Pressing the tabs on the right side of the shroud separate the shroud from the outdoor coil.
5. The “E-K” models have a four piece condenser shroud where the top, sides and shroud will come apart separately.
6. Remove the two screw securing the outdoor coil to the base pan.
7. Carefully lift the outdoor coil over the basepan lip.

**VENT DOOR**

1. Remove Chassis from wall sleeve.
2. Remove P clamp securing vent door control cable to center partition and disconnect cable from vent door.
3. Remove vent door by opening door and pulling hinge tabs out of slots in center partition.
4. Remove the door by pulling hinge tabs out away from the center partition.

**DIGIAIR™ PRODUCT INFORMATION**

The Amana brand PTAC factory installed DigiAIR™ module is a “make-up air” system to assist in providing outside air into a room (living space) to replace ventilation air that is usually removed through an exhaust air system in bathroom areas. This exhausted air creates a negative air pressure in the room and the DigiAIR™ make up air system is designed to move most of the needed replacement outside air to enter the room through the DigiAIR™ dehumidification module. To assist in this needed outside make up air to be directed to come through the DigiAIR™ dehumidification module, a fan in the module operates continuously (as long as the module is properly maintained and powered), to provide positive pressure through the DigiAIR™ module to the inside room.

The DigiAIR™ Amana brand PTAC is a 2 compressor system. The Amana brand R32 / R410A PTAC system is used to assist in control of the sensible heat (room temperature) and latent load (moisture) that is brought into the room by the DigiAIR system and also the typical sensible and latent loads created in the room from occupants and typical air infiltration. The DigiAIR™ module is an R32 compressor system designed to continuously provide outside make up air at rates of up 75 CFM (dependent on the room’s negative pressure *). The outside air entering the room through the DigiAIR™ module is first filtered, to assist in keeping the DigiAIR™ coils clean, and then dehumidified. The DigiAIR™ dehumidification is engaged at outside air temperatures and humidity levels (RH%: Relative Humidity) when the air entering the room generally should have moisture reduced before it comes into the room.

# SERVICING

The DigiAIR™ compressor/dehumidification process is controlled both by a humidity sensor and temperature sensor that monitor the outdoor environment. The DigiAIR™ module is factory pre-set at

50% RH: > 46° F and < 68° F
40% RH: > 68° F and < 78° F
25% RH: > 78° F

When the outdoor humidity (RH %) and temperature levels are above the DigiAIR™ settings, the compressor and dehumidification process begins. If the outdoor humidity level drops below the RH% settings at the temperatures above or the outdoor temperature drops below 48°F the compressor dehumidification operation ceases. The DigiAIR™ dehumidification RH% can easily be adjusted through the Amana brand PTAC touch pad, if changes to the factory preset RH% are desired. The 25% RH setting can be adjusted to as low as 15% or as high as 60%. The factory preset ranges are based on HVAC industry psychometric chart sensible temperature and humidity ratios that would generally require outside air to be dehumidified before being introduced into a room and should suffice from most applications.

A temperature sensor (brown thermistor) monitors the refrigeration temperature coming into the compressor (suction line) to protect against potential liquid refrigerant entering the compressor. If refrigerant temperatures are too low, the compressor will be cutoff to help protect the compressor from liquid refrigerant damage. A temperature sensor (green thermistor) monitors the outdoor air temperature, and if the temperature falls below 48°F, the compressor is disabled. Generally, at air temperatures below 48°F, the air coming through the DigiAIR™ module does not need to be dehumidified before entering the indoor room. Additionally, since the dehumidification coil (evaporator) is generally operating 12°F to 18°F below the outdoor temperature, the compressor should be cut off to prevent the evaporator coil from frosting or icing and not being able to exchange heat. A frosted or iced coil cannot dehumidify the incoming air. All dehumidifier controls and safety features are automatically reset.

The DigiAIR™ fan, when the unit is properly powered and maintained, will operate 24/7/365 to provide continuous outside makeup air, even when the compressor is not operating. For installation locations where the winters are cold, or it is desired to warm the air coming through the DigiAIR™ system before it enters the room, an optional 250 watt electric heater is available for the make-up air system.

Condensate water generated from the DigiAIR™ dehumidifier operation drains directly into the PTAC's exterior base pan. When the PTAC's R32 compressor is operating in the cooling mode, and the outside air temperature is above 60°F, condensate water in the PTAC's exterior base pan will be picked up and slung onto the condenser coil for re-evaporation to the outside air. Excess condensate is drained into the PTAC's wall case from which it can drain either to the outside through the drain holes in the sleeve or piped to a drainage system with the use of an optional drain kit. Since condensate water can be generated from the PTACs compressor operation in either the cooling mode or, in the case of a heat pump, during reverse cycle operation plus the added condensate water generated from the DigiAIR™ dehumidification operation, a piped condensate drain system is highly recommended.

**NOTE:** A DigiAIR™ module is intended to work in conjunction with a building exhaust system. As an example, to obtain 55 CFM of outside makeup air, the room exhaust ventilation system needs to create a 0.053 (inches $H_2O$) negative static pressure in the indoor conditioned room. CFM can be increased or decreased by increasing or lowering the negative static pressure created by the property ventilation system. The DigiAIR can provide up to 75 CFM when negative static pressures are increased to a high enough level. Failure to properly exhaust the air introduced by the DigiAIR™ makeup air module will result in poor performance of both the outside air volumes (CFM) and the proper dehumidification of the makeup air.

This unit is shipped, tested and rated with the dehumidification switch off.

| | |
|---|---|
| Dehumidification Kit Volts | 230 |
| Frequency (Hz) | 60 |
| Phase | 1 |
| Dehmid Comp. RLA | 1.05 |
| Dehumid comp. LRA | 3.30 |
| Res. Heat Watts | 250 |
| Res. Heat Amps | 1.10 |
| Refrigerant R-134A Oz. | 3.20 |
| High Side Pressure (Psig) | 200 |
| Low Side Pressure (Psig) | 60 |
| Air Flow (CFM) | 55 |
| Dehimidification (Oz/Hr) | 5 |
| Kit Weight (lbs) | 20 |

### DIGIAIR™ SYSTEM FEATURES

DigiAIR™ is a factory added module to an Amana brand PTAC to provide for outside makeup air that is dehumidified when needed:

1. Lower installation and renovation costs than typical central dedicated outdoor air systems (DOAS).
2. Configurable dehumidification settings based on HVAC industry psychometric data. Configuration can easily and accurately be adjusted through a few button clicks of the PTAC touchpad by any authorized site personnel.

3. Outside Makeup air volumes of up to 75 CFM.
4. Drier room conditions (lower RH %) usually means that room occupants will feel comfortable at higher sensible temperatures saving PTAC operational costs.
5. Optional 250 watt electric heater to warm colder outside air when needed.
6. Filter to assist in keeping the DigiAIR™ coils cleaner to maintain dehumidification and outside air flow. Permanent and washable.
7. Vent door is configurable to either be open 100% of the time or can be closed if codes permit intermittent operation.
8. Future, optional Web access to allow monitoring and configuration access through an Amana® Brand DigiSmart / DigiLink internet connectivity.

### INSTALLATION INSTRUCTIONS

The DigiAIR™ makeup air and dehumidification module is factory installed to the PTAC partition panel and base pan as shown in Figure 2. The optional heater, to raise the inlet air temperature in cold climates, is attached to the indoor section of the partition panel. The DigiAIR™ power switch is shipped from the factory in the “off” position. Before installing the PTAC front cover, change the DigiAIR™ power switch to the “on” position if makeup air is desired. The DigiAIR™ power switch is located on the front of the PTAC control and is visible when the front is not installed. Also, if the DigiAIR™ vent door is to be manually secured in the open position, the vent door screw must be inserted before the PTAC is installed into the wall sleeve.

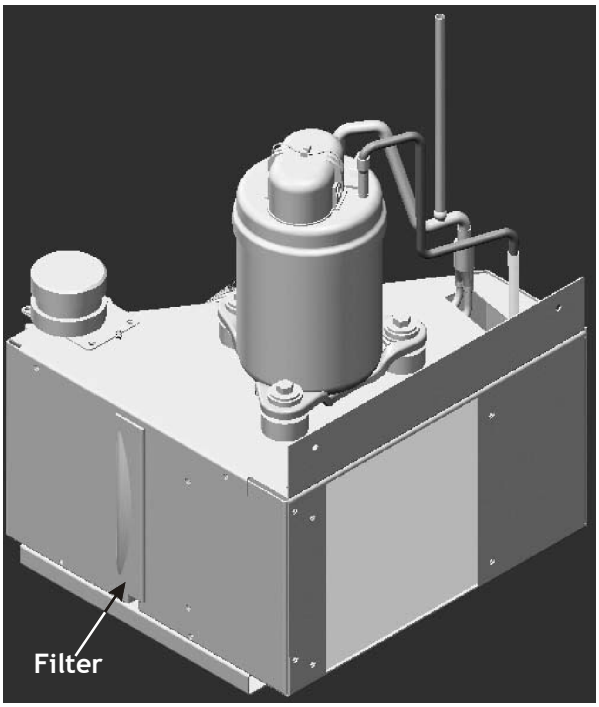


FIGURE 1 - DIGIAIR™ KIT

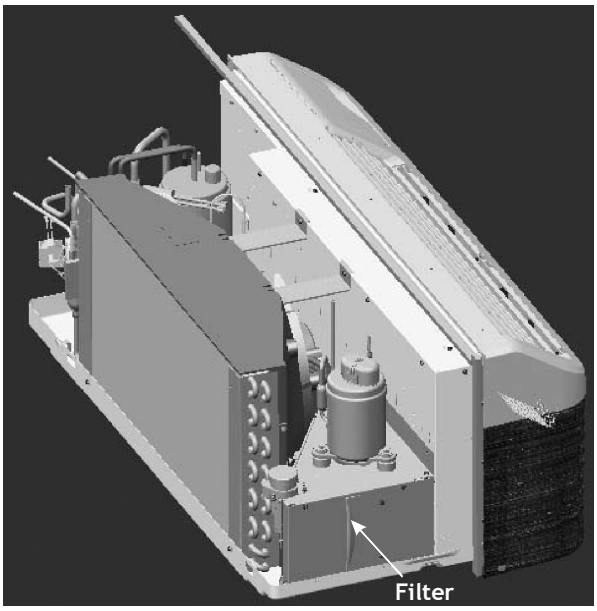


FIGURE 2 - DIGIAIR™ KIT INSTALLED IN PTAC UNIT

### POWER CORD

1. Remove the unit front by tilting the bottom of the front outward and then lift the front straight up.
2. Remove the control knobs on the control panel cover by pulling upward on the knobs. Remove the escutcheon.
3. Remove the control panel cover by removing the two screws holding the control panel cover. Tilt the control panel forward to gain access to the wires.
4. Remove the power cord clamp located near the bottom right of the chassis.

### OPERATING INSTRUCTIONS

The DigiAIR™ power switch should be in the “ON” position to activate the module. When this switch is ON and the PTAC unit is properly powered, the fan will operate and the vent door motor will keep the DigiAIR™ vent door in the open position.

This allows makeup outside air to flow through the DigiAIR™ system, 24/7/365. The compressor and optional 250 watt electric resistance heater may be energized when configured temperatures, outside air RH% and operating conditions are met. If codes or property ownership mandate that the makeup air is required 100% of the time, then the DigiAIR™ module should never be powered off. If preferred, the vent door can be permanently installed in the open position by adding a screw to the additional holes provided in the vent panel and vent door, Figures 3, 4, 5. To keep the vent door always open, manually align Figures 4 and 5 then insert a screw through the vent door & vent panel holes. See Figure 4 & 5.

# SERVICING

If local codes allow for the property (or individual room) ventilation exhaust system to be powered off in extreme weather conditions (very cold weather, dust storms etc.) or when the room becomes unoccupied, the DigiAIR™ module can be powered off and the fan will cease operating and the vent door will slide to the closed position (if the optional vent door screw is not installed).

**NOTE:** If it is preferable for the vent door to be manually kept open at all times, the screws must be inserted before the unit is installed into the wall sleeve.

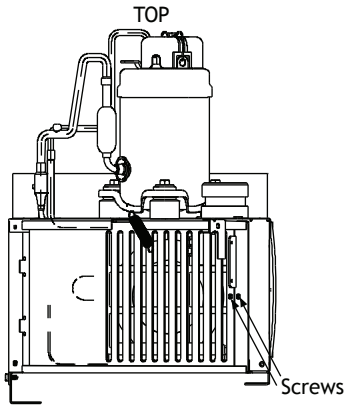


**FIGURE 3**

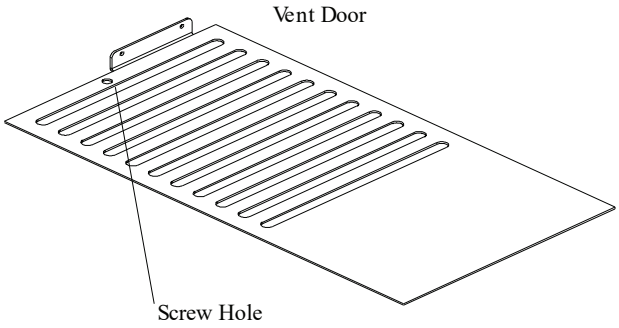


**FIGURE 4**

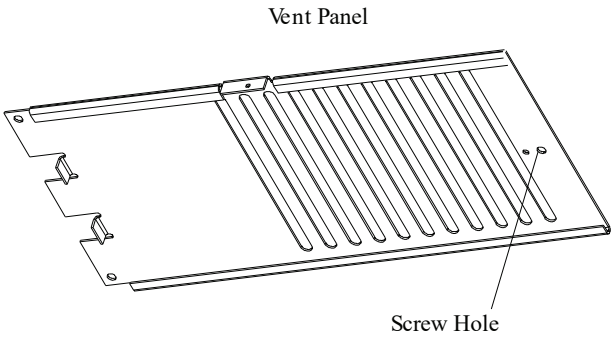


**FIGURE 5**

**WARNING**

**HIGH VOLTAGE**
**DISCONNECT ALL POWER BEFORE SERVICING. MULTIPLE POWER SOURCES MAY BE PRESENT. FAILURE TO DO SO MAY CAUSE PROPERTY DAMAGE, PERSONAL INJURY OR DEATH. DO NOT SERVICE THIS UNIT WITHOUT FIRST SHUTTING OFF POWER TO THE UNIT FROM THE CIRCUIT BREAKER AND/PR REMOVING THE UNIT CORD SET PLUG FROM THE WALL OUTLET.**

### MAINTENANCE AND CLEANING

Complete PTAC maintenance and cleaning instructions can be found in IO-447*.

### DIGIAIR™ INTAKE AIR FILTER

To properly maintain the operational performance of your DigiAIR™ Make-up air module, it is extremely important that the inlet air filter be cleaned, at minimum, every 3 months or more often if operated in dusty or dirty locations or conditions. Dirty filters will dramatically reduce both the supplied CFM of outside air as well as lower the dehumidification of the air passing through the DigiAIR™ module. The intake air filter is constructed of durable polypropylene, and is designed to be permanent and washable.

Filters should be checked frequently after initial installation and operation and cleaned as required. This will assist in establishing the proper time interval to maintain for future scheduled cleaning.

Before cleaning the intake filter, turn off the power to the entire PTAC unit and unplug the unit from the power receptacle.

The following procedure is used to remove the intake filter:

1. Pull the PTAC unit out from the wall sleeve sufficiently to allow access to the filter. See complete instructions for removing and reinstalling the PTAC chassis from the wall sleeve in IO-447*.
2. Grasp the filter by its molded handle, located on the side of the kit (See Figures 1 & 2).
3. Pull the filter straight out from the side and remove.

**NOTE:** Spare filters are available and you can also replace the existing filters with new ones and remove the dirty filters to a central location to thoroughly clean and have them ready for the next filter check.

4. Clean filter with vacuum or with running water. Reverse this procedure to reinstall the filter.

# SERVICING

5. Also inspect and clean the vent door as needed to remove material that can restrict air flow into the DigiAIR module. It is also recommended that the condensate drainage is checked while the DigiAIR™ filter is being cleaned or replaced. Make sure that water is properly allowed to drain from the PTAC base pan and wall sleeve or drainage system. Also, with the added condensate volumes from the DigiAIR™ system, manufactured approved time released algaecide pads should be considered to keep the water flowing properly.
6. Reinstall the PTAC chassis into the wall sleeve. Reinstate power to the PTAC and make sure that the DigiAIR™ power switch is in the on position.
7. While the R410A PTAC is not actively conditioning the air and the PTAC fan(s) are in the off position, check to make sure that air is flowing through the DigiAIR™ module into and through the PTAC into the room.

### OBTAINING SERVICE FOR DIGIAIR™

In the event this unit requires repair or servicing beyond what is covered in this manual, contact an authorized service organization.

To obtain an authorized servicer, contact your sales representative or agency.

### POWER CORD

1. Remove the unit front by tilting the bottom of the front outward and then lift the front straight up.
2. Remove the control knobs on the control panel cover by pulling upward on the knobs. Remove the escutcheon.
3. Remove the control panel cover by removing the two screws holding the control panel cover. Tilt the control panel forward to gain access to the wires.
4. Remove the power cord clamp located near the bottom right of the chassis.

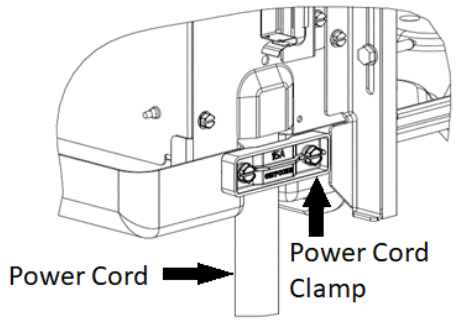


5. On 115 volt or 230/208 volt units disconnect the white lead from the LINE 1 terminal on the control board and the black lead from LINE 2 terminal on the control board and the green ground wire from the partition panel.

On 265 volt units disconnect the ribbed lead from the LINE 1 terminal on the control board and the smooth lead from the fuse holder and the green ground wire from the partition panel.

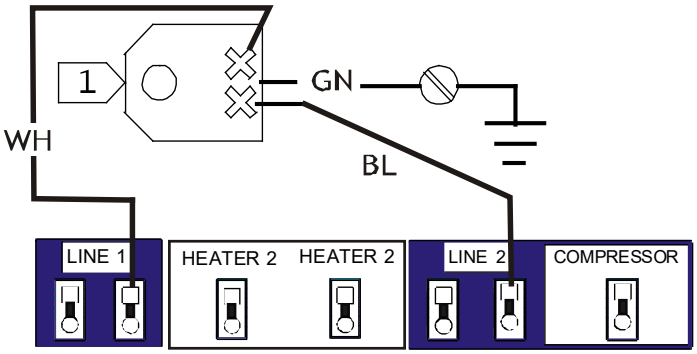


### EVAPORATOR

1. Remove front cover.
2. Remove the two mounting screws, one on each side of the control board cover. Tilting the control panel out, disconnect ribbon connector from control board. DO NOT PULL ON RIBBON. GRASP THE BLACK RIBBON CONNECTOR AND PULL GENTLY.
3. Remove the two screws securing the top screen to the evaporator assembly. (Be sure to slide the top of the screen between the top flange and chassis when reassembling.)
4. Remove screws on mid partition panel and shift out of the way.
5. Remove the two screws securing the heater assembly to the evaporator.
6. Pull heater assembly up and out of the chassis.
7. Disconnect all wiring to the heater assembly and remove the assembly.
8. Remove the floodback protector or thermistor from the evaporator discharge tube.
9. Remove screws holding evaporator to basepan and partition panel.
10. After recapturing the refrigerant charge (See Refrigeration Service section), debraze the tubes into the evaporator. Be sure to protect all chassis components, especially foam parts, from excessive heat.
11. Lift the evaporator up over the basepan edge and remove.

# ACCESSORIES

| Accessory Description | Part Numbers |
|---|---|
| Antenna | DT01G |
| Antenna Generic Radio | GT01G |
| Circuit Breaker Kit(208/230Vonly) | CBK15C, CBK20C and CBK30C |
| Condensate Drain Kit | DK900D |
| Condenser Baffle Kit | DGK1B |
| Door Sensor | DD01G |
| Duct Extension | EDK02B |
| Hard Wire  kit Quick Disconnect 208/230v | PTQC3A |
| Hard Wire Kit | PTPWHWK4 |
| Hard Wire Kit Quick Disconnect 265v | PTQC4A |
| Hydronic Hot water Kit | HWK03 |
| Hydronic Steam Kit | HVK03 |
| Main Duct Kit | MDK01E |
| Outdoor Grill Architectural | AGK01TB |
| Outdoor Grill Standard | SGK01B |
| Subbase Kit 208/230v 15/20A | PTSB320E |
| Subbase Kit 208/230v 30A | PTSB330E |
| Subbase Kit 265v 15/20A | PTSB420E |
| Subbase Kit 265v 25A | PTSB430E |
| Terminal Duct | TDK02B |
| Wall Sleeve | WS900E |
| Web-enabled Platform Servicer | DL01G |
| Wire Harness Kit | PWHK01C |
| Wired Wall Thermostat | PHWT-A150H |
| Wireless Thermostat | DS01G |

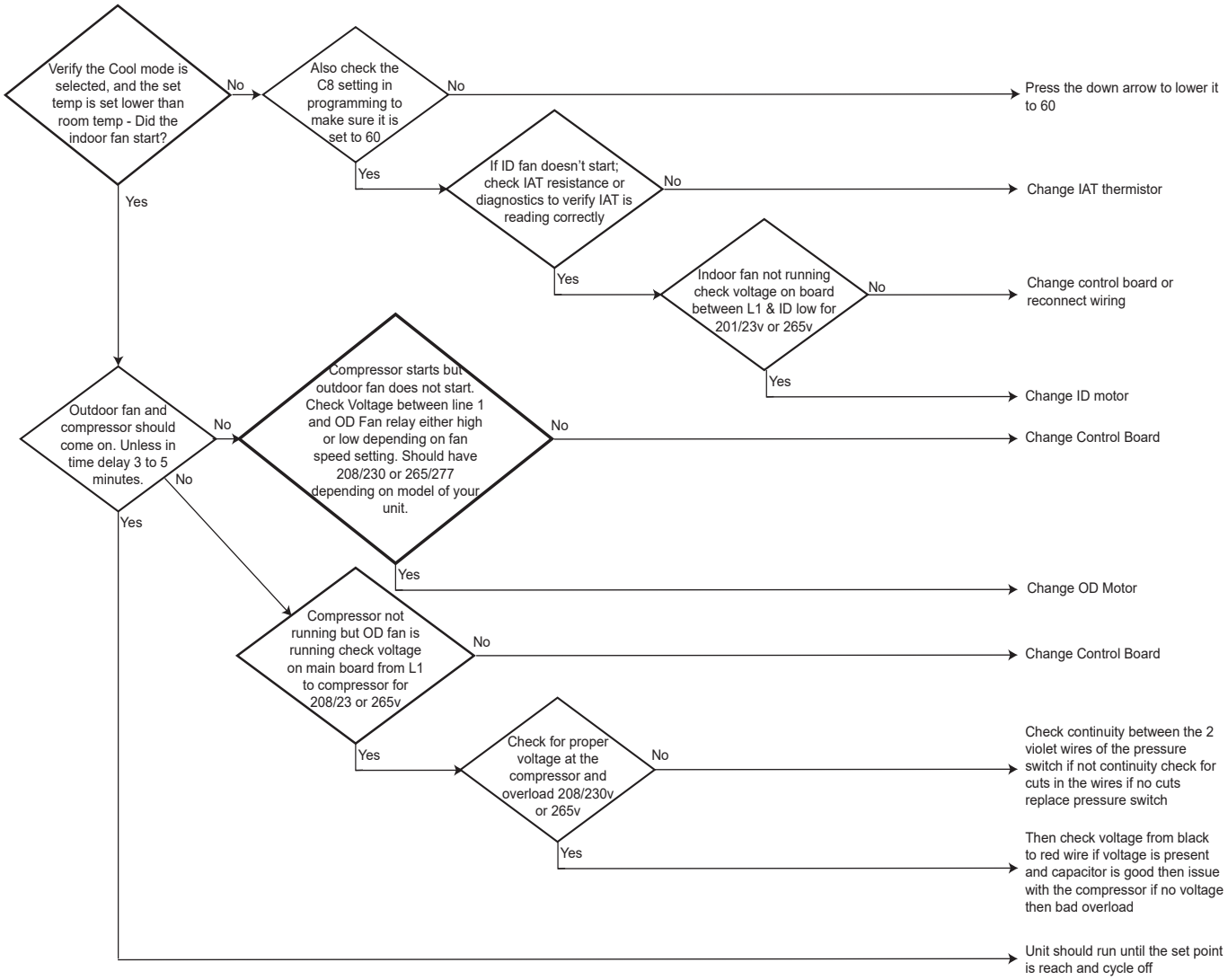
Verify the Cool mode is selected, and the set temp is set lower than room temp - Did the indoor fan start?
No
Also check the C8 setting in programming to make sure it is set to 60
No
Press the down arrow to lower it to 60
Yes
If ID fan doesn't start; check IAT resistance or diagnostics to verify IAT is reading correctly
No
Change IAT thermistor
Yes
Indoor fan not running check voltage on board between L1 & ID low for 201/23v or 265v
No
Change control board or reconnect wiring
Yes
Change ID motor
Yes
Outdoor fan and compressor should come on. Unless in time delay 3 to 5 minutes.
No
Compressor starts but outdoor fan does not start. Check Voltage between line 1 and OD Fan relay either high or low depending on fan speed setting. Should have 208/230 or 265/277 depending on model of your unit.
No
Change Control Board
No
Yes
Yes
Change OD Motor
Compressor not running but OD fan is running check voltage on main board from L1 to compressor for 208/23 or 265v
No
Change Control Board
Yes
Check for proper voltage at the compressor and overload 208/230v or 265v
No
Check continuity between the 2 violet wires of the pressure switch if not continuity check for cuts in the wires if no cuts replace pressure switch
Yes
Then check voltage from black to red wire if voltage is present and capacitor is good then issue with the compressor if no voltage then bad overload
Unit should run until the set point is reach and cycle off

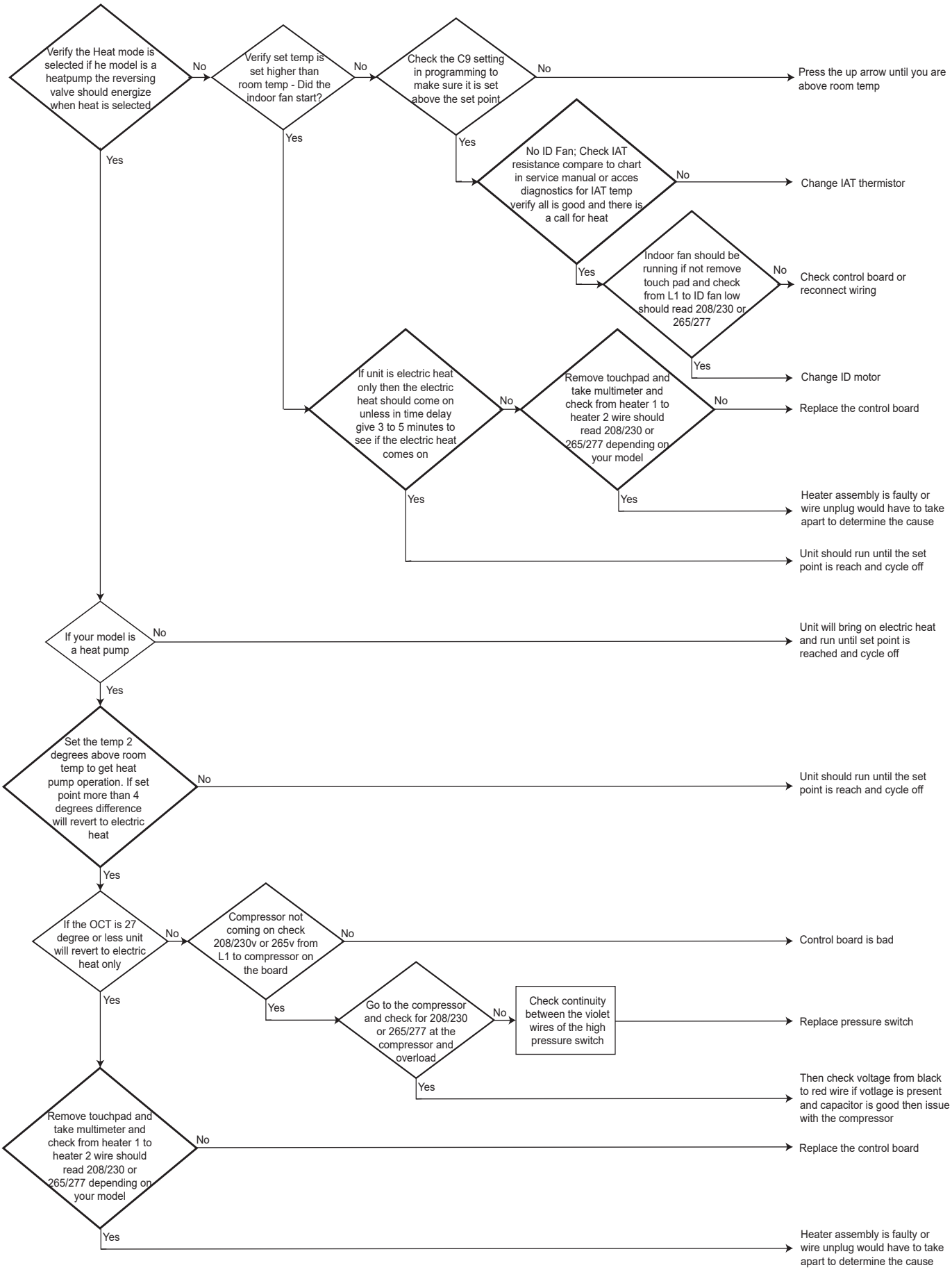
Verify the Heat mode is selected if he model is a heatpump the reversing valve should energize when heat is selected
No
Verify set temp is set higher than room temp - Did the indoor fan start?
No
Check the C9 setting in programming to make sure it is set above the set point
No
Press the up arrow until you are above room temp
Yes
Yes
No ID Fan; Check IAT resistance compare to chart in service manual or acces diagnostics for IAT temp verify all is good and there is a call for heat
No
Change IAT thermistor
Yes
Indoor fan should be running if not remove touch pad and check from L1 to ID fan low should read 208/230 or 265/277
No
Check control board or reconnect wiring
Yes
Change ID motor
If unit is electric heat only then the electric heat should come on unless in time delay give 3 to 5 minutes to see if the electric heat comes on
No
Remove touchpad and take multimeter and check from heater 1 to heater 2 wire should read 208/230 or 265/277 depending on your model
No
Replace the control board
Yes
Yes
Heater assembly is faulty or wire unplug would have to take apart to determine the cause
Unit should run until the set point is reach and cycle off
If your model is a heat pump
No
Unit will bring on electric heat and run until set point is reached and cycle off
Yes
Set the temp 2 degrees above room temp to get heat pump operation. If set point more than 4 degrees difference will revert to electric heat
No
Unit should run until the set point is reach and cycle off
Yes
If the OCT is 27 degree or less unit will revert to electric heat only
No
Compressor not coming on check 208/230v or 265v from L1 to compressor on the board
No
Control board is bad
Yes
Yes
Go to the compressor and check for 208/230 or 265/277 at the compressor and overload
No
Check continuity between the violet wires of the high pressure switch
Replace pressure switch
Yes
Then check voltage from black to red wire if votlage is present and capacitor is good then issue with the compressor
Remove touchpad and take multimeter and check from heater 1 to heater 2 wire should read 208/230 or 265/277 depending on your model
No
Replace the control board
Yes
Heater assembly is faulty or wire unplug would have to take apart to determine the cause

Error Code:
br - Low voltage

Flashing Red-LS˚5

Applicable Models:
All PTAC models

Method of Error Detection:
br will display

Error Decision Conditions:
Voltage is below 19v from transformer to board

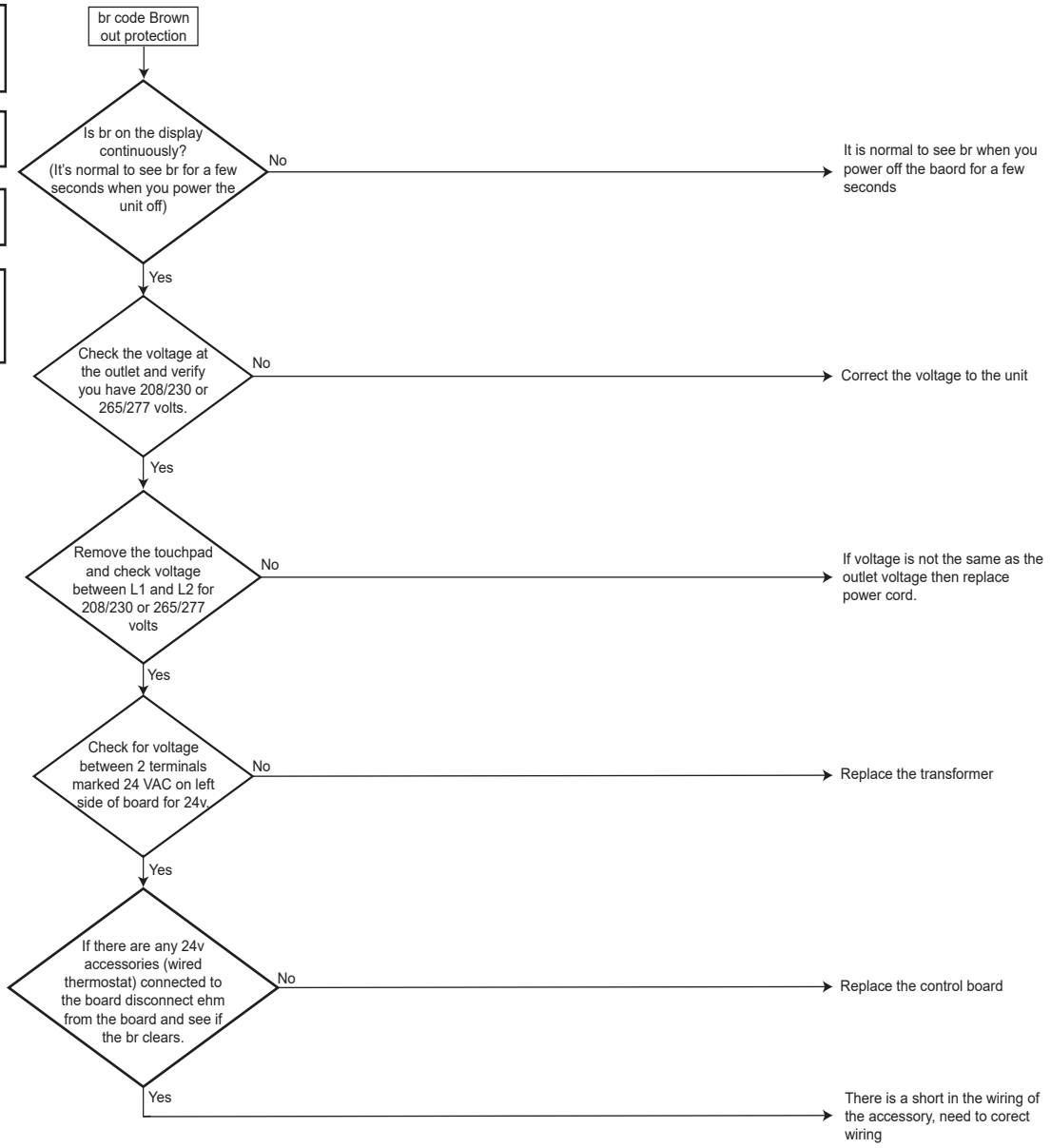

Error Code:
C4 - Indoor coil issues
Flashing Red-LS^2

L3 - Indoor coil issues
Flashing Red-LS^2

Applicable Models:
All models

Method of Error Detection:
Indoor coil icing or frozen

Error Decision Conditions:
Refrigerant issue, cap tube restriction or thermister reading out of range.

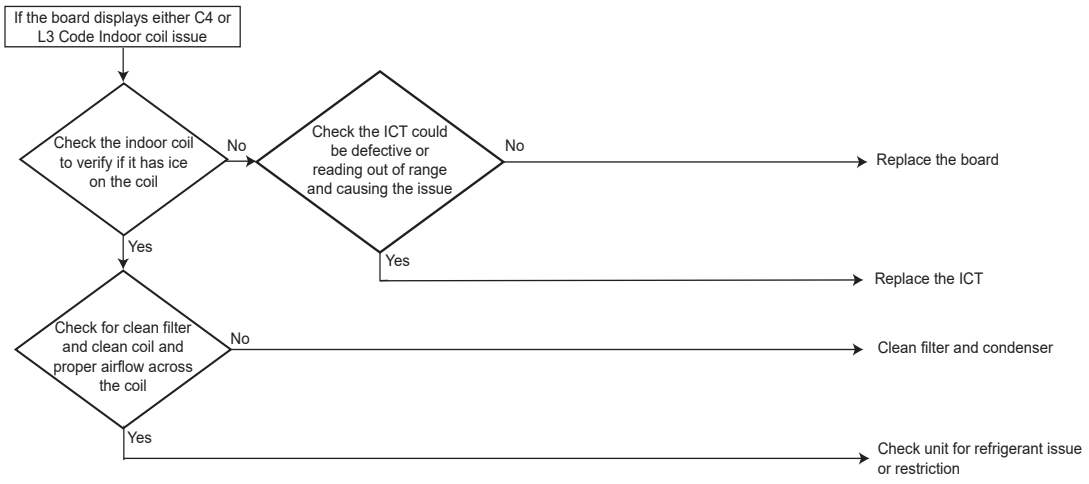

Error Code:
d5 - Outdoor DC motor not running

Flashing Red-LS^3

Applicable Models:
PMH**, PMC**, HEH**, HEC**

Method of Error Detection:
Check wire harness connections from main board to outdoor DC board

Error Decision Conditions:
No voltage to outdoor motor from DC board

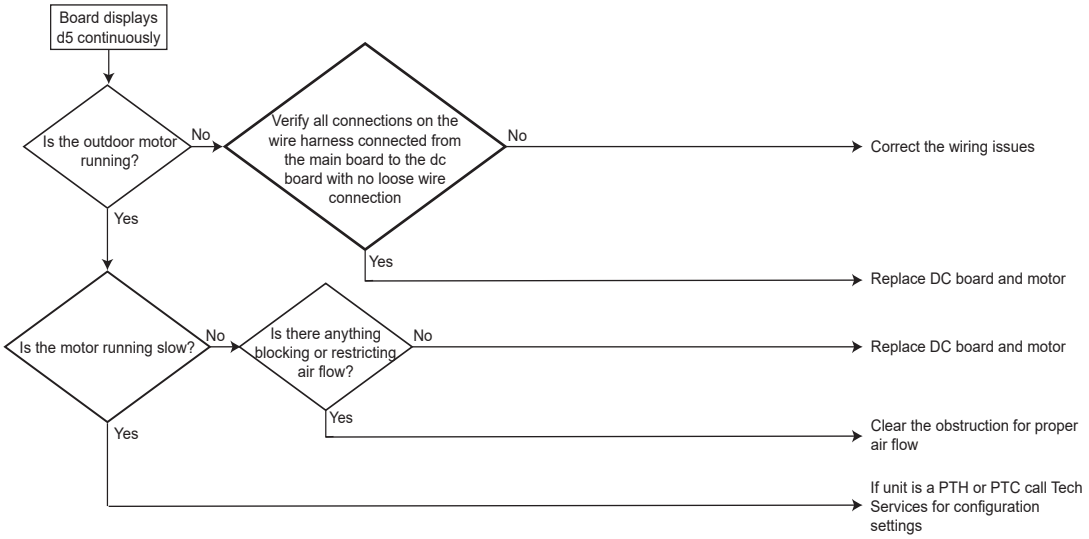

Error Code:
Ec - Incorrect configuration

Flashing Red-LS^6

Applicable Models:
PMH**& PMC**

Method of Error Detection:
Incorrect configuration

Error Decision Conditions:
Incorrect configuration

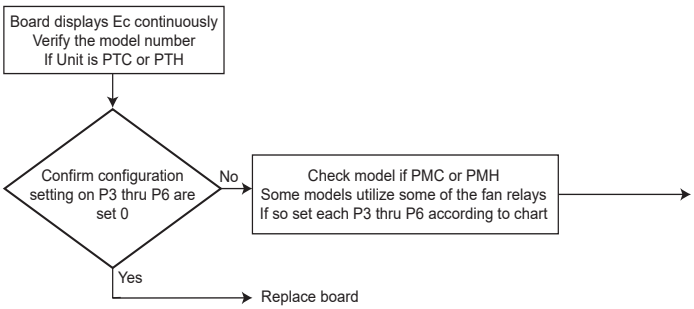


**ID Fan Relay Kit Usage**

| Configuration Code | Option | Setting |
|---|---|---|
| P3 | PSC Fan Motor | 0 |
| P3 | DigiAir Vent Kit Fan | 1 |
| P3 | Power Vent/ Smart Vent/ Economizer/ Economizer Plus 3 (w/PO configuration) | 3 |
| P3 | Lighting Control Kit | 4 |
| P3 | Transfer Fan Kit | 5 |
| P3 | Condensate Pump Kit | 6 |

**ID High Fan Relay Kit Usuage**

| Configuration Code | Option | Setting |
|---|---|---|
| P4 | PSC Fan Motor | 0 |
| P4 | DigiAir Vent Kit Fan | 2 |
| P4 | Power Vent/ Smart Vent/ Economizer/ Economizer Plus 3 (w/PO configuration) | 3 |
| P4 | Lighting Control Kit | 4 |
| P4 | Transfer Fan Kit | 5 |
| P4 | Condensate Pump Kit | 6 |

**OD Low Fan Relay Kit Usage**

| Configuration Code | Option | Setting |
|---|---|---|
| P5 | PSC Fan Motor | 0 |
| P5 | Power Vent/ Smart Vent/ Economizer/ Economizer Plus 3 (w/PO configuration) | 3 |
| P5 | Lighting Control Kit | 4 |
| P5 | Transfer Fan Kit | 5 |
| P5 | Condensate Pump Kit | 6 |

**OD High Fan Relay Kit Usage**

| Configuration Code | Option | Setting |
|---|---|---|
| P6 | PSC Fan Motor | 0 |
| P6 | Power Vent/ Smart Vent/ Economizer/ Economizer Plus 3 (w/PO configuration) | 3 |
| P6 | Lighting Control Kit | 4 |
| P6 | Transfer Fan Kit | 5 |

Error Code:
F3 - Indoor ambient thermistor error

Flashing Red-LS^4

Applicable Models:
All PTAC models

Method of Error Detection:
Check thermistor resistance

Error Decision Conditions:
IAT <-20, or >200 or open, or shorted

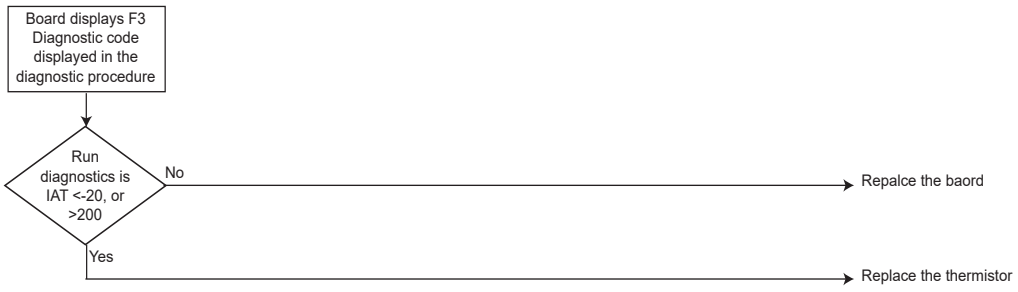

Error Code:
F4 - Indoor coil thermistor error

Flashing Red-LS^4

Applicable Models:
All PTAC models

Method of Error Detection:
Check the resistance of the thermistor

Error Decision Conditions:
ICT<-20, or >200, open or shorted

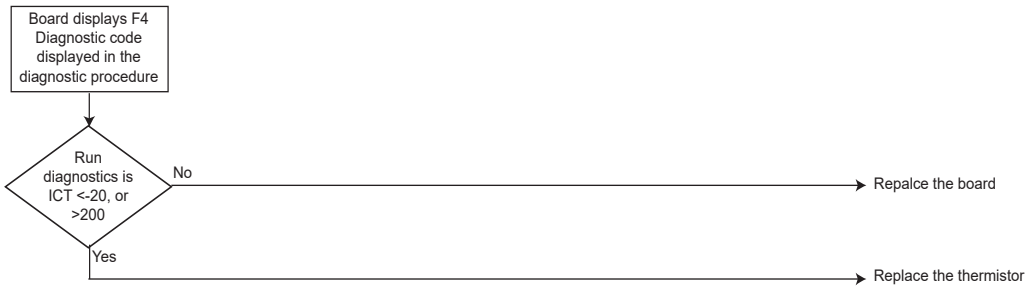

Error Code:
F5 - DS01* signal loss

Flashing Red-LS^4

Applicable Models:
All PTAC models

Method of Error Detection:
Check antenna to ensure harness is plugged into board. Is thermostat bound to board.

Error Decision Conditions:
Wireless thermostat is not bound to board

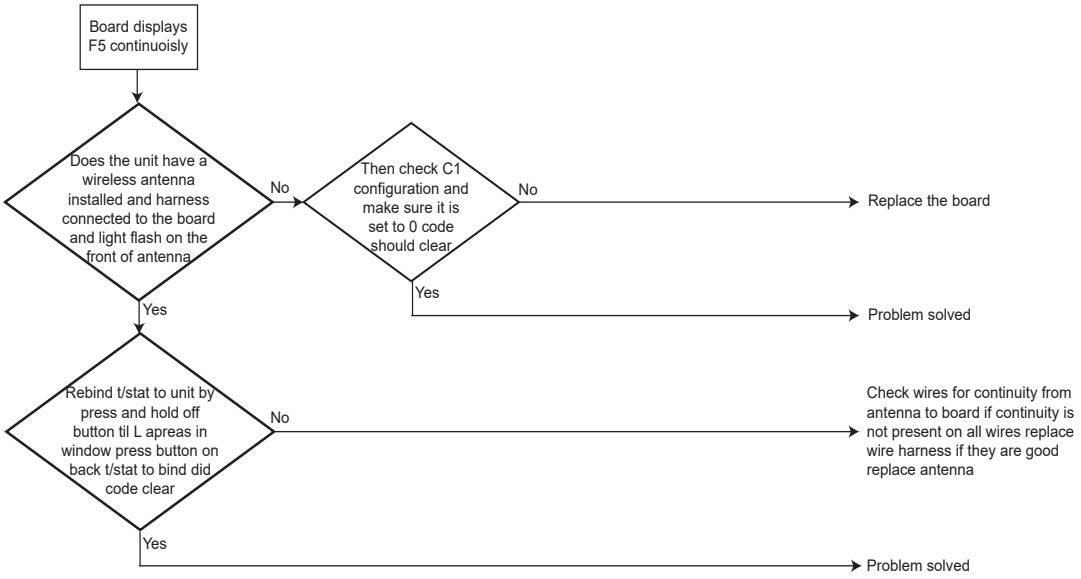

Error Code:
F6 - Indoor discharge thermistor error

Flashing Red-LS^4

Applicable Models:
All PTAC models

Method of Error Detection:
Check the thermistor resistance

Error Decision Conditions:
IDT <-20 or >233, or open, or shorted

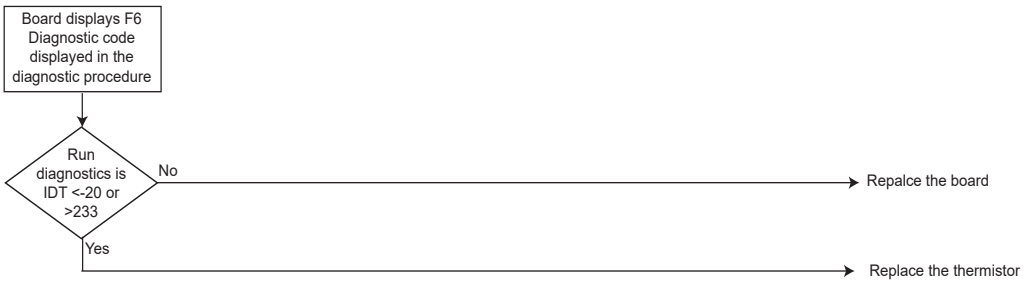

Error Code:
F7 - Outdoor coil thermistor error

Flashing Red-LS^4

Applicable Models:
All PTAC models

Method of Error Detection:
Check the thermistor

Error Decision Conditions:
OCT <-20 or >200, or open, or shorted

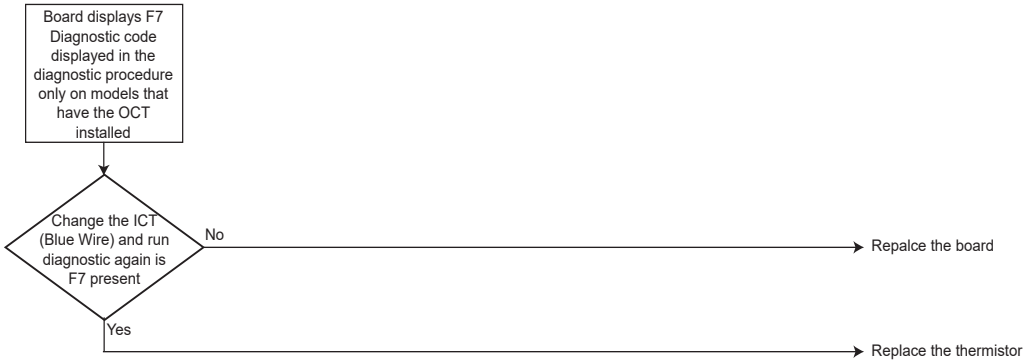

Error Code:
HI - High voltage lock out

Flashing Red-LS˜5

Applicable Models:
All PTAC models

Method of Error Detection:
Check voltage from low side of transformer 24v-32v

Error Decision Conditions:
Voltage is over 32v

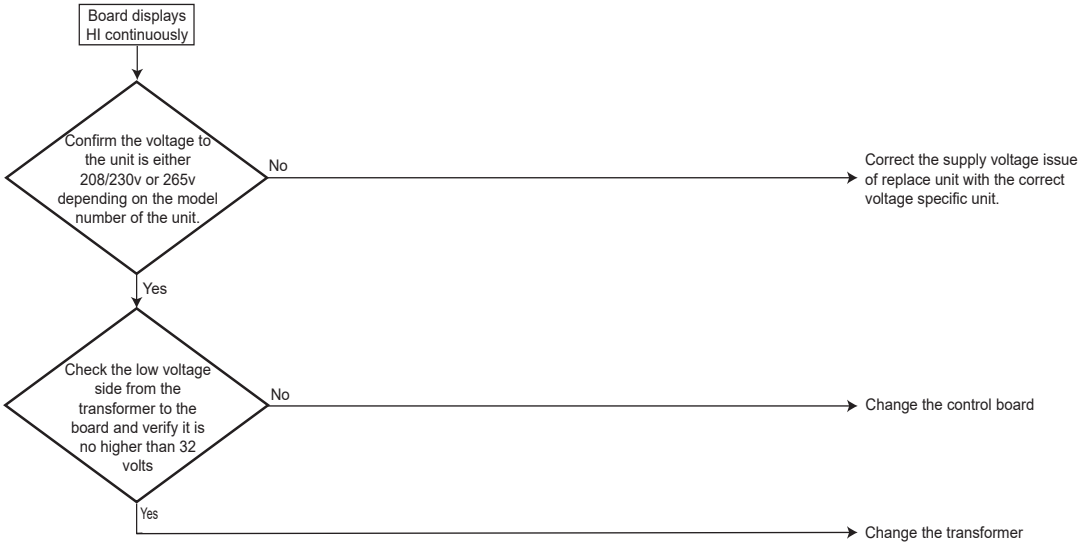

# WIRING DIAGRAMS

**WARNING** IT IS ESSENTIAL THAT INDOOR AND OUTDOOR UNITS BE PROPERLY MATCHED. FAILURE TO FOLLOW THESE INSTRUCTIONS OR TO PROPERLY MATCH EVAPORATORS AND CONDENSERS CAN RESULT IN UNIT DAMAGE, PROPERTY DAMAGE AND/OR PERSONAL INJURY. NO WARRANTY CLAIM WILL BE HONORED FOR MIX-MATCHED SYSTEMS THAT FAIL TO ADHERE TO THE SPECIFIED PISTON SIZE.

**WARNING** HIGH VOLTAGE!
DISCONNECT ALL POWER BEFORE SERVICING OR INSTALLING THIS UNIT. MULTIPLE POWER SOURCES MAY BE PRESENT. FAILURE TO DO SO MAY CAUSE PROPERTY DAMAGE, PERSONAL INJURY OR DEATH.

WIRING IS SUBJECT TO CHANGE

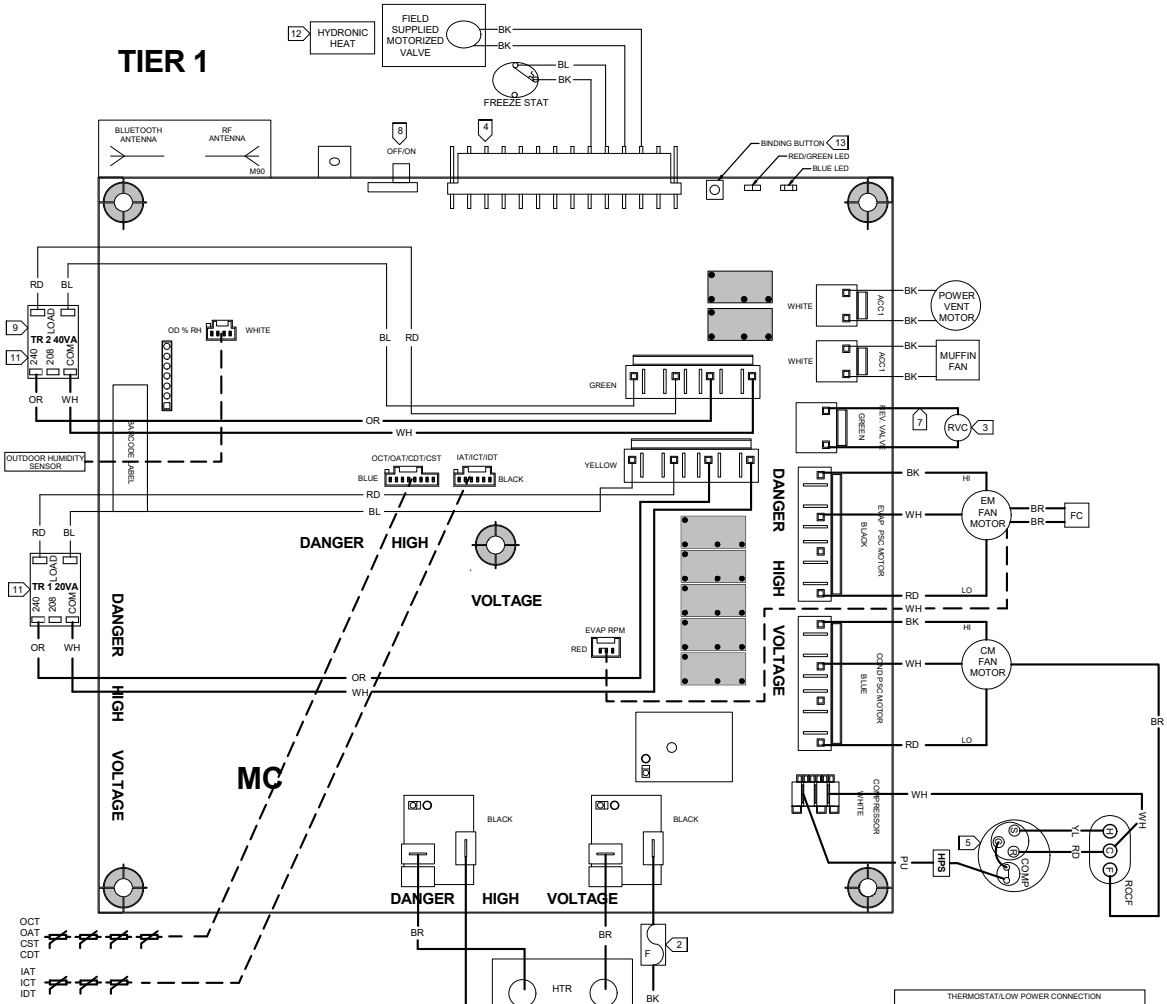


NOTES:

1. WARNING: DISCONNECT POWER BEFORE SERVICING. WIRING TO UNIT MUST BE PROPERLY POLARIZED (FOR 265V AND 115V) AND GROUNDED.
2. REQUIRED FOR 265V UNITS
3. ON HEAT PUMP MODELS ONLY.
4. FOR REMOTE THERMOSTAT OPERATION, SEE CONFIGURATION CHART.
5. PTC073G**, HEC073H** AND NEWER COMPRESSORS REQUIRE NO EXTERNAL OVERLOAD.HPS WILL WIRE STRAIGHT TO "C" TERMINAL ON COMPRESSOR
6. CHORD COLOR ON 265V MODELS IS WHITE, BUT THERE IS A BLACK DOT OR SLEEVE ON THE BLACK SIDE OF THE WHITE CHORD, FOR 230V & 115V MODELS, THE WIRE COLOR IS BLACK.
7. FOR 265V MODELS, THE WIRE COLOR IS BLUE. FOR 260V & 115V MODELS, THE WIRE COLOR IS BLACK
8. SHOWN IN "ON" CONDITION
9. TR2 IS ONLY INCLUDED FOR FIOPS
10. WHITE WIRE MUST BE CONNECTED AS SHOWN AND IS THE NEUTRAL FOR 265V AND 115V UNITS (230/208V UNITS ARE HOT ON BOTH SIDES)
11. IF THE UNIT IS POWERED BY A 208V SUPPLY, SWITCH THE TRANSFORMER POST TO 208V. 265V AND 115V TRANSFORMERS NOT SHOWN AND ONLY HAVE 1 POST.
12. FIOPS SHOWN IN POSSIBLE WIRING CONFIGURATION, HOWEVER, SOME ARE MUTUALLY EXCLUSIVE DEPENDING ON CONFIGURATION AND CAN BE CONNECTED TO ACC1 OR ACC2 (NOTE, MULTIPLE KITS CANNOT BE WIRED TO THE SAME TERMINAL AS SHOWN FOR ILLUSTRATION PURPOSES)
13. PRESS AND RELEASE BIND BUTTON TO INITIATE BLUETOOTH PAIRING WITH SMART PHONE FOR CONFIGURATION AND DIAGNOSTICS
PRESS AND RELEASE BINDING BUTTON FOR A LEAST 5 SECONDS AND LESS THAN 10 SECONDS THEN RELEASE TO INITIATE BINDING TO IN-ROOM THERMOSTAT WIRELESS AND OCCUPANCY SENSOR

THERMISTOR WIRE COLOR

| | | |
|---|---|---|
| DST | DIGIAIR SUCTION TEMPERATURE | BROWN |
| DDT | DIGIAIR DISCARGE TEMPERATURE | GRAY |
| OCT | OUTDOOR COIL TEMPERATURE | BLUE |
| OAT | OUTDOOR AMBIENT TEMPERATURE | GREEN |
| CST | COMPRESSOR SUCTION TEMPERATURE | VIOLET |
| CDT | COMPRESSOR DISCHARGE TEMPERATURE | ORANGE |
| IAT | INDOOR AMBIENT TERMPERATURE | BLACK |
| ICT | INDOOR COIL TEMPERATURE | RED |
| IDT | INDOOR DISCHARGE TEMPERATURE | YELLOW |

COMPONENT LEGEND

| | |
|---|---|
| CM | OUTDOOR FAN MOTOR |
| COMP | COMPRESSOR |
| EM | EVAPORATOR MOTOR |
| F | FUSE |
| FC | FAN CAPACITOR |
| FIOP | FACTORY OR FIELD INSTALLED OPTION |
| HPS | HIGH PRESSURE SWITCH |
| HTR | HEATER ELEMENT |
| MC | MAIN CONTROL |
| PSC | PERMANENT SPLIT CAPACITY |
| R | RELAY |
| RCCF | RUN CAPACITOR FOR COMPRESSOR, AND FAN |
| RVC | REVERSING VALVE COIL |
| TF | TRANSFER FAN |
| TR | TRANSFORMER |
| PSC | PERMANENT SPLIT CAPACITOR |
| VSM | VARIABLE SPEED MOTOR |

WIRE CODE

| | |
|---|---|
| BK | BLACK |
| BL | BLUE |
| BL/PK | BLUE WITH PINK STRIPE |
| BR | BROWN |
| GR | GREEN |
| GY | GRAY |
| OR | ORANGE |
| PK | PINK |
| PU | PURPLE |
| RD | RED |
| TN | TAN |
| VT | VIOLET |
| WH | WHITE |
| YL | YELLOW |
| YL/PK | YELLOW WITH PINK STRIPE |
| GN | GROUND |

4

| REMOTE THERMOSTAT OPERATION | | | |
|---|---|---|---|
| HEAT PUMP W/AUXILIARY ELECTRIC HEAT | | COOLING UNIT W / ELECTRIC HEAT | |
| FUNCTION | CONNECT R TO: | FUNCTION | CONNECT R TO: |
| OFF | ---------- | OFF | ---------- |
| FAN | G ** | FAN | G ** |
| COOL | G, Y/W1 | COOL | G, Y/W1 |
| 1ST STAGE HEAT | G,B,Y / W1* | HEAT | G, W2 OR G,B,Y / W1* |
| 2ND STAGE HEAT | G, W2 | ---------- | ---------- |

* FOR A HEAT PUMP THERMOSTAT USED ON A STRAIGHT COOL UNIT.
** GL - LOW SPEED
GH - HIGH SPEED

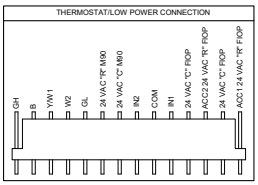


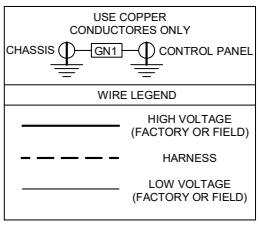


IO-936A

Wiring is subject to change. Always refer to the wiring diagram on the unit for the most up-to-date wiring.

# WIRING DIAGRAMS

**WARNING** IT IS ESSENTIAL THAT INDOOR AND OUTDOOR UNITS BE PROPERLY MATCHED. FAILURE TO FOLLOW THESE INSTRUCTIONS OR TO PROPERLY MATCH EVAPORATORS AND CONDENSERS CAN RESULT IN UNIT DAMAGE, PROPERTY DAMAGE AND/OR PERSONAL INJURY. NO WARRANTY CLAIM WILL BE HONORED FOR MIX-MATCHED SYSTEMS THAT FAIL TO ADHERE TO THE SPECIFIED PISTON SIZE.

**WARNING** HIGH VOLTAGE! DISCONNECT ALL POWER BEFORE SERVICING OR INSTALLING THIS UNIT. MULTIPLE POWER SOURCES MAY BE PRESENT. FAILURE TO DO SO MAY CAUSE PROPERTY DAMAGE, PERSONAL INJURY OR DEATH.

## TIER 2

WIRING IS SUBJECT TO CHANGE

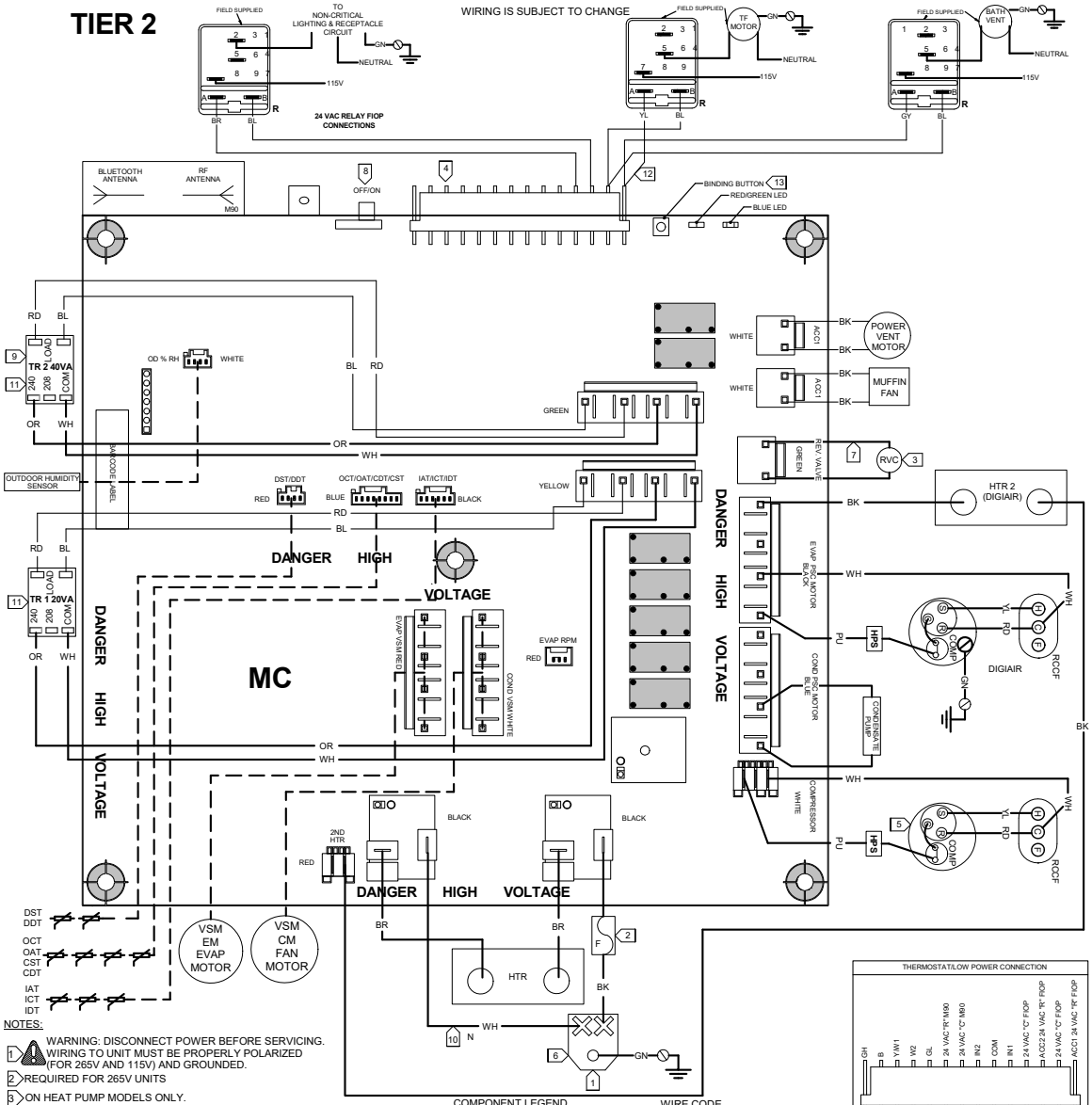


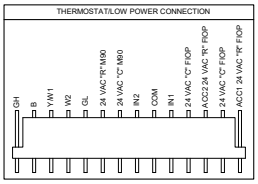


USE COPPER CONDUCTORES ONLY

CHASSIS — GN1 — CONTROL PANEL

WIRE LEGEND

- HIGH VOLTAGE (FACTORY OR FIELD)
- HARNESS
- LOW VOLTAGE (FACTORY OR FIELD)

NOTES:

1. WARNING: DISCONNECT POWER BEFORE SERVICING. WIRING TO UNIT MUST BE PROPERLY POLARIZED (FOR 265V AND 115V) AND GROUNDED.
2. REQUIRED FOR 265V UNITS
3. ON HEAT PUMP MODELS ONLY.
4. FOR REMOTE THERMOSTAT OPERATION, SEE CONFIGURATION CHART.
5. PTC073G**, HEC073H** AND NEWER COMPRESSORS REQUIRE NO EXTERNAL OVERLOAD.HPS WILL WIRE STRAIGHT TO "C" TERMINAL ON COMPRESSOR
6. CHORD COLOR ON 265V MODELS IS WHITE, BUT THERE IS A BLACK DOT OR SLEEVE ON THE BLACK SIDE OF THE WHITE CHORD, FOR 230V & 115V MODELS, THE WIRE COLOR IS BLACK.
7. FOR 265V MODELS, THE WIRE COLOR IS BLUE. FOR 260V & 115V MODELS, THE WIRE COLOR IS BLACK
8. SHOWN IN "ON" CONDITION
9. TR2 IS ONLY INCLUDED FOR FIOPS
10. WHITE WIRE MUST BE CONNECTED AS SHOWN AND IS THE NEUTRAL FOR 265V AND 115V UNITS (230/208V UNITS ARE HOT ON BOTH SIDES)
11. IF THE UNIT IS POWERED BY A 208V SUPPLY, SWITCH THE TRANSFORMER POST TO 208V. 265V AND 115V TRANSFORMERS NOT SHOWN AND ONLY HAVE 1 POST.
12. FIOPS SHOWN IN POSSIBLE WIRING CONFIGURATION, HOWEVER, SOME ARE MUTUALLY EXCLUSIVE DEPENDING ON CONFIGURATION AND CAN BE CONNECTED TO ACC1 OR ACC2 (NOTE, MULTIPLE KITS CANNOT BE WIRED TO THE SAME TERMINAL AS SHOWN FOR ILLUSTRATION PURPOSES)
13. PRESS AND RELEASE BIND BUTTON TO INITIATE BLUETOOTH PAIRING WITH SMART PHONE FOR CONFIGURATION AND DIAGNOSTICS PRESS AND RELEASE BINDING BUTTON FOR A LEAST 5 SECONDS AND LESS THAN 10 SECONDS THEN RELEASE TO INITIATE BINDING TO IN-ROOM THERMOSTAT WIRELESS AND OCCUPANCY SENSOR

THERMISTOR WIRE COLOR

| | | |
|---|---|---|
| DST | DIGIAIR SUCTION TEMPERATURE | BROWN |
| DDT | DIGIAIR DISCARGE TEMPERATURE | GRAY |
| OCT | OUTDOOR COIL TEMPERATURE | BLUE |
| OAT | OUTDOOR AMBIENT TEMPERATURE | GREEN |
| CST | COMPRESSOR SUCTION TEMPERATURE | VIOLET |
| CDT | COMPRESSOR DISCHARGE TEMPERATURE | ORANGE |
| IAT | INDOOR AMBIENT TERMPERATURE | BLACK |
| ICT | INDOOR COIL TEMPERATURE | RED |
| IDT | INDOOR DISCHARGE TEMPERATURE | YELLOW |

COMPONENT LEGEND

| | |
|---|---|
| CM | OUTDOOR FAN MOTOR |
| COMP | COMPRESSOR |
| EM | EVAPORATOR MOTOR |
| F | FUSE |
| FC | FAN CAPACITOR |
| FIOP | FACTORY OR FIELD INSTALLED OPTION |
| HPS | HIGH PRESSURE SWITCH |
| HTR | HEATER ELEMENT |
| MC | MAIN CONTROL |
| PSC | PERMANENT SPLIT CAPACITY |
| R | RELAY |
| RCCF | RUN CAPACITOR FOR COMPRESSOR, AND FAN |
| RVC | REVERSING VALVE COIL |
| TF | TRANSFER FAN |
| TR | TRANSFORMER |
| PSC | PERMANENT SPLIT CAPACITOR |
| VSM | VARIABLE SPEED MOTOR |

WIRE CODE

| | |
|---|---|
| BK | BLACK |
| BL | BLUE |
| BL/PK | BLUE WITH PINK STRIPE |
| BR | BROWN |
| GR | GREEN |
| GY | GRAY |
| OR | ORANGE |
| PK | PINK |
| PU | PURPLE |
| RD | RED |
| TN | TAN |
| VT | VIOLET |
| WH | WHITE |
| YL | YELLOW |
| YL/PK | YELLOW WITH PINK STRIPE |
| GN | GROUND |

4

| REMOTE THERMOSTAT OPERATION | | | |
|---|---|---|---|
| HEAT PUMP W/AUXILIARY ELECTRIC HEAT | | COOLING UNIT W / ELECTRIC HEAT | |
| FUNCTION | CONNECT R T0: | FUNCTION | CONNECT R T0: |
| OFF | ---------- | OFF | ---------- |
| FAN | G ** | FAN | G ** |
| COOL | G, Y/W1 | COOL | G, Y/W1 |
| 1ST STAGE HEAT | G,B,Y / W1* | HEAT | G, W2 OR G,B,Y / W1* |
| 2ND STAGE HEAT | G, W2 | ---------- | ---------- |

* FOR A HEAT PUMP THERMOSTAT USED ON A STRAIGHT COOL UNIT.
** GL - LOW SPEED
GH - HIGH SPEED

IO-937A

Wiring is subject to change. Always refer to the wiring diagram on the unit for the most up-to-date wiring.