Service and Troubleshooting

Package Terminal Air Conditioner/HeatPump Standard and Remote Applications with LED M70 Controlboard and R-410A

This manual is to be used by qualified, professionally trained HVAC technicians only. Goodman does not assume any responsibility for property damage or personal injury due to improper service procedures or services performed by an unqualified person.

Pride and workmanship go into every product to provide our customers with quality products. It is possible, however, that during its lifetime a product may require service. Products should be serviced only by a qualified service technician who is familiar with the safety procedures required in the repair and who is equipped with the proper tools, parts, testing instruments and the appropriate service manual. **REVIEW ALL SERVICE INFORMATION IN THE APPROPRIATE SERVICE MANUAL BEFORE BEGINNING REPAIRS.**

TABLE OF CONTENTS

IMPORTANT INFORMATION 2
PRODUCT IDENTIFICATION 3
SYSTEM OPERATION 12
SCHEDULED MAINTENANCE 27
SERVICING 30
CHECKING VOLTAGE 39
CHECKING THERMOSTAT AND WIRING 39
HEATER ASSEMBLY 40
DRAIN PAN VALVE (HEAT PUMP MODELS ONLY) 41
CAPACITOR CHECK 41
CHECKING FAN AND MOTOR BLOWER WINDINGS 42
COMPRESSOR WINDINGS 43
OVERLOAD. 44
CHECKING COMPRESSOR EFFICIENCY 44
FILTER DRIER REPLACEMENT. 44
REVERSING VALVE. 45
ACCESSORIES 51
WIRING DIAGRAMS 67

WARNING

ONLY PERSONNEL THAT HAVE BEEN TRAINED TO INSTALL, ADJUST, SERVICE, MAINTENANCE OR REPAIR (HEREINAFTER, "SERVICE") THE EQUIPMENT SPECIFIED IN THIS MANUAL SHOULD SERVICE THE EQUIPMENT.

THIS EQUIPMENT IS NOT INTENDED FOR USE BY PERSONS (INCLUDING CHILDREN) WITH REDUCED PHYSICAL, SENSORY OR MENTAL CAPABILITIES, OR LACK OF EXPERIENCE AND KNOWLEDGE, UNLESS THEY HAVE BEEN GIVEN SUPERVISION OR INSTRUCTION CONCERNING USE OF THE APPLIANCE BY A PERSON RESPONSIBLE FOR THEIR SAFETY.

CHILDREN SHOULD BE SUPERVISED TO ENSURE THAT THEY DO NOT PLAY WITH THE EQUIPMENT.

THE MANUFACTURER WILL NOT BE RESPONSIBLE FOR ANY INJURY OR PROPERTY DAMAGE ARISING FROM IMPROPER SUPERVISION, SERVICE OR SERVICE PROCEDURES. IF YOU SERVICE THIS UNIT, YOU ASSUME RESPONSIBILITY FOR ANY INJURY OR PROPERTY DAMAGE WHICH MAY RESULT. IN ADDITION, IN JURISDICTIONS THAT REQUIRE ONE OR MORE LICENSES TO SERVICE THE EQUIPMENT SPECIFIED IN THIS MANUAL, ONLY LICENSED PERSONNEL SHOULD SERVICE THE EQUIPMENT. IMPROPER SUPERVISION, INSTALLATION, ADJUSTMENT, SERVICING, MAINTENANCE OR REPAIR OF THE EQUIPMENT SPECIFIED IN THIS MANUAL, OR ATTEMPTING TO INSTALL, ADJUST, SERVICE OR REPAIR THE EQUIPMENT SPECIFIED IN THIS MANUAL WITHOUT PROPER SUPERVISION OR TRAINING MAY RESULT IN PRODUCT DAMAGE, PROPERTY DAMAGE, PERSONAL INJURY OR DEATH.

WARNING

DO NOT BYPASS SAFETY DEVICES.

© 2019-2023 Daikin Comfort Technologies Manufacturing, L.P.

Amana ® is a registered trademark of Maytag Corporation or its related companies and is used under license to Goodman Company, L.P.. Houston TX, USA.. All rights reserved.

RS4200005r15
March 2023

IMPORTANT INFORMATION

IMPORTANT NOTICES FOR CONSUMERS AND SERVICERS

RECOGNIZE SAFETY SYMBOLS, WORDS AND LABELS

Pride and workmanship go into every product to provide our customers with quality products. It is possible, however, that during its lifetime a product may require service. Products should be serviced only by a qualified service technician who is familiar with the safety procedures required in the repair and who is equipped with the proper tools, parts, testing instruments and the appropriate service manual. REVIEW ALL SERVICE INFORMATION IN THE APPROPRIATE SERVICE MANUAL BEFORE BEGINNING REPAIRS.

WARNING

HIGH VOLTAGE

DISCONNECT ALL POWER BEFORE SERVICING OR INSTALLING THIS UNIT. MULTIPLE POWER SOURCES MAY BE PRESENT. FAILURE TO DO SO MAY CAUSE PROPERTY DAMAGE, PERSONAL INJURY OR DEATH.

SAFE REFRIGERANT HANDLING

While these items will not cover every concievable situation, they should serve as a usefull guide.

WARNING

THIS AIR CONDITIONER IS NOT MEANT TO PROVIDE UNATTENDED COOLING OR LIFE SUPPORT FOR PERSONS OR ANIMALS WHO ARE UNABLE TO REACT TO THE FAILURE OF THIS PRODUCT.

THE FAILURE OF AN UNATTENDED AIR CONDITIONER MAY RESULT IN EXTREME HEAT IN THE CONDITIONED SPACE CAUSING OVERHEATING OR DEATH OF PERSONS OR ANIMALS.

PRECAUTIONS MUST BE TAKEN TO WARN OF OR GUARD AGAINST SUCH AN OCCURENCE.

WARNING

HIGH VOLTAGE
DISCONNECT ALL POWER BEFORE SERVICING. MULTIPLE POWER SOURCES MAY BE PRESENT. FAILURE TO DO SO MAY CAUSE PROPERTY DAMAGE, PERSONAL INJURY OR DEATH. DO NOT SERVICE THIS UNIT WITHOUT FIRST SHUTTING OFF POWER TO THE UNIT FROM THE CIRCUIT BREAKER AND/OR REMOVING THE UNIT CORD SET PLUG FROM THE WALL OUTLET. LINE VOLTAGE WILL BE PRESENT AT THE CONTROL BOARD, TERMINALS L1 AND L2 WHENEVER POWER IS APPLIED TO THE UNIT REGARDLESS OF THE MASTER SWITCH POSITION.

WARNING

GOODMAN WILL NOT BE RESPONSIBLE FOR ANY INJURY OR PROPERTY DAMAGE ARISING FROM IMPROPER SERVICE OR SERVICE PROCEDURES. IF YOU INSTALL OR PERFORM SERVICE ON THIS UNIT, YOU ASSUME RESPONSIBILITY FOR ANY PERSONAL INJURY OR PROPERTY DAMAGE WHICH MAY RESULT. MANY JURISDICTIONS REQUIRE A LICENSE TO INSTALL OR SERVICE HEATING AND AIR CONDITIONING EQUIPMENT.

OUTSIDE THE U.S., **call 1-713-861-2500**.
(Not a technical assistance line for dealers.) Your telephone company will bill you for the call.

PRODUCT IDENTIFICATION NOMENCLATURE

PTC	07	3	G	35	AXXX	AA
1,2,3	4,5	6	7	8,9	10,11,12,13	14,15

Basic Model Type

PTC	Standard Cooler PTAC
PTH	Standard Heat Pump PTHP
HEC	High-Efficiency Cooler PTAC
HEH	High-Efficiency Heat Pump
32C	High-Efficiency R32 Cooler PTAC
DRY	Dehumid Cooler PTAC
PMC	DigiAIR Cooler PTAC
PMH	DigiAIR Heat Pump PTAC

Nominal Cooling Capacity

07	7,000 BTU/h	60 Hz
09	9,000 BTU/h	60 Hz
10	10,000 BTU/h	50 Hz
12	12,000 BTU/h	50 or 60 Hz
15	15,000 BTU/h	60 Hz
17	17,000 BTU/h	60 Hz

Rated Voltage

2	115V, 60 Hz, 1 Phase
3	230/208V, 60 Hz, 1 Phase
4	265V, 60 Hz, 1 Phase
5	240/220V, 50 Hz, 1 Phase Export

Design Series

G	R-410A
H	High-Efficiency R-410A
J	High-Efficiency R-32

Engineering

Major & Minor Revisions

Features Code *

A	Standard Model
C	Corrosion Protection (Seacoast)
D	Power Door
F	Fuse Holder (230/208 Only)
L	Lighting Control
H	Hydronic Heat-Capable
P	Condensate Pump (PTH Only)
Q	Quiet STC 31 Chassis
R	RF Antenna
V	Power Vent
X	placeholder
W	Hard-Wired (PTQC)

Heater Size

00	No Electric Heat	35	3.5 kW (230/208V)
15	1.5 kW		3.7 kW (265V)
25	2.5 kW	50	5.0 kW

* Use up to 4 as needed in alphabetical order. Examples:

PTC123*50AXXX PTC073*35CRXX

PTC123*50CXXX PTC073*25CQRW

Package Terminal Air Conditioner	
Model/Revision	Description
PT********** AA	Redesign unit with 2 fan motors and R410A refrigerant
PT********** AC	2 Speed Condenser Fan Motor
PT********** BA	M70 Control Board
PT********** EA	Release of units with low displacement compressor 7 and 12 K HP PTAC models. Only for standard models and high efficiency models
PT********** GA	Transition from Fayetteville to Houston built product

SPECIFICATIONS PMC/PMH SERIES

Model [1], [6], [8], [9]	PMC073G**	PMC093G**	PMC123G**	PMC153G**
Voltage [1], [3]	230 / 208	230 / 208	230 / 208	230 / 208
Capacity (BTU/h)	6,800 / 6,700	9,000 / 8,700	11,800 / 11,700	14,500 / 14,400
Amps[10]	3.2 / 3.2	4.3 / 4.3	6.0 / 6.0	7.1 /7.1
Watts[10]	565 / 550	775 / 760	1,070 / 1,060	1,460 / 1,450
EER	12.0 / 12.1	11.6 /11.4	11.0 / 11.0	9.9 / 9.9
Kit Fresh Air, CFM	25-35	25-35	25-35	25-35
Kit Dehumidification (Oz/Hr)	5	5	5	5

Model [1], [6], [8], [9]	PMH073G**	PMH093G**	PMH123G**	PMH153G**
Voltage [1], [3]	230 / 208	230 / 208	230 / 208	230 / 208
Capacity (BTU/h)	6,900 / 6,700	8,700 / 8,700	11,400 / 11,200	14,700 / 14,700
Amps[10]	3.4 / 3.4	4.2 / 4.2	6.2 / 6.2	7.4 / 7.4
Watts[10]	575 / 555	670 / 655	1055 / 1015	1,530 / 1,530
EER	11.9 / 12.0	11.7 / 11.8	10.8 / 11.0	9.6 / 9.6
Kit Fresh Air, CFM	25-35	25-35	25-35	25-35
Kit Dehumidification (Oz/Hr)	5	5	5	5

Model [1], [6], [8], [9]	PMH074G**	PMH094G**	PMH124G**
Voltage [1], [3]	265	265	265
Capacity (BTU/h)	7,700	9,000	12,000
Amps[10]	3.2	4.3	5.1
Watts[10]	655	795	1150
EER	11.7	11.3	10.4
Kit Fresh Air, CFM	25-35	25-35	25-35
Kit Dehumidification (Oz/Hr)	5	5	5

* Actual vent CFM performance will vary due to application and installation conditions.

Notes:

[1] All 265-volt models must use an Amana® brand sub-base (PTSB4**E) or an Amana® brand hard-wire kit (PTPWHWK4).

[2] Minimum Circuit Ampacity (MCA) ratings conform to the National Electric Code; however, local codes should apply. Minimum voltage on 230/208-volt models is 197 volts; maximum is 253 volts.

[3] Minimum voltage on 265-volt models is 239 volts; maximum is 292 volts.

[4] Overcurrent protection for all units without electric heaters is 15 amps. Overcurrent protection on 265-volt models must be cartridge-style time-delay fuses (included and factory-installed on all Amana® brand 265-volt chassis). See heater perform

[5] Heating capacity and efficiency based on unit operation without condensate pump.

[6] Specify two-digit heater kW size to complete model number.

[7] R-410A refrigerant used in all systems. R-134A used in Kit Fresh Air.

[8] All units meet or exceed ASHRAE 90.1 standards.

[9] All units less than 250 volts have a Leak Current Detector Interrupter (LCDI) power cord and meet UL 484 standards.

[10] Refer to electric heat performance data for total MCA and recommended overcurrent protection. Amps and Watts notation refers to compressor only.

EER - Energy Efficiency Ratio per The Air-Conditioning, Heating, and Refrigeration Institute (AHRI) Test Procedures and Canadian Standards Association (CSA) Test Procedures.

COP - Coefficient of Performance per AHRI Test Procedures

SPECIFICATIONS PTC G SERIES

Model [1, 7, 9, 10]		PTC 073G**	PTC 074G**	PTC 092G***BA*	PTC 093G***	PTC 094G***	PTC 123G**	PTC 124G***	PTC 153G***	PTC 154G***
Voltage [1, 3]		230/208	265	115	230 / 208	265	230/208	265	230 / 208	265
Capacity (BTU/h)		7,000 / 7,000	7,000	9,000	9,200 / 9,000	9,100	11,900 /11,700	12,200	14,800 / 14,500	14,800
Amps[11]		3.1 / 3.1	2.7	8.3	4.1 / 4.1	3.6	6.0 / 6.0	4.8	7.0 / 7.0	6.1
Watts[11]		580 / 560	585	795	790 / 765	805	1,080 / 1,060	1,170	1,480 / 1,450	1,480
EER		12.0 / 12.5	11.9	11.3	11.6 / 11.7	11.3	11.0 / 11.0	10.4	10.0 / 10.0	10.0
Unit without Electric Heater										
Min. Circuit Amps [2, 5, 11]		3.7	3.2	8.3	4.9	4.4	7.3	5.8	8.5	7.4
CFM (Cool/Wet Coil)	High	330	340	290	290	290	340	340	340	340
	Low	245	245	264	264	264	245	245	314	314
CFM (Dry Coil)	High	360	370	310	310	310	370	370	360	360
	Low	270	270	282	282	282	270	20	332	332
Ventilated Air, CFM (Fan Only)**		40*	65*	65**	65**	65**	40*	40**	65**	65**
Dehumidification (Pints/Hr.)		1.7	1.7	2.2	2.2	2.2	1.7	1.7	4.4	4.4
Net Weight (lbs.)		106	103	102	102	102	108	108	113	113
Ship Weight (lbs.)		115	115	117	117	117	125	125	130	130

* Information in this manual applies only to the BA revision of 0902G*** model.

** Actual vent CFM performance will vary due to application and installation conditions.

Notes:

1 All 265-volt models must use an Amana® brand sub-base (PTSB4**E) or an Amana® brand hard-wire kit (PTPWHWK4).

2 Minimum Circuit Ampacity (MCA) ratings conform to the National Electric Code; however, local codes should apply. Minimum voltage on 230/208-volt models is 197 volts; maximum is 253 volts.

3 Minimum voltage on 265-volt models is 239 volts; maximum is 292 volts.

4 Minimum voltage on 115-volt models is 104 volts; maximum is 127 volts.

5 Overcurrent protection for all units without electric heaters is 15 amps. Overcurrent protection on 265-volt models must be cartridge-style time-delay fuses (included and factory-installed on all Amana® brand 265-volt chassis). See heater perform

6 Heating capacity and efficiency based on unit operation without condensate pump.

7 Specify two-digit heater kW size to complete model number.

8 R-410A refrigerant used in all systems.

9 All units meet or exceed ASHRAE 90.1 standards.

10 All units less than 250 volts have a Leak Current Detector Interrupter (LCDI) power cord and meet UL 484 standards.

11 Refer to electric heat performance data for total MCA and recommended overcurrent protection. Amps and Watts notation refers to compressor only.

EER - Energy Efficiency Ratio per The Air-Conditioning, Heating, and Refrigeration Institute (AHRI) Test Procedures and Canadian Standards Association (CSA) Test Procedures.

COP - Coefficient of Performance per AHRI Test Procedures

Model [1, 7, 9, 10]		PTC 073G**DA	PTC 093G***DA	PTC 123G**DA
Voltage [1, 3]		230/208	230 / 208	230/208
Capacity (BTU/h)		7000/7000	9,200 / 9,000	11500/11400
Amps [11]		3.1/3.1	4.1 / 4.1	5.1/5.1
Watts [11]		580/560	790/765	1045/1015
EER		12/12.5	11.6 / 11.7	11.0/11.2
Unit without Electric Heater				
Min. Circuit Amps [2, 5, 11]		3.7	5.0	6.2
CFM (Cool/Wet Coil)	High	330	290	340
	Low	245	264	245
CFM (Dry Coil)	High	360	310	370
	Low	270	282	270
Ventilated Air, CFM (Fan Only)**		40*	65**	40*
Dehumidification (Pints/Hr.)		1.7	2.2	1.7
Net Weight (lbs.)		106	108	110
Ship Weight (lbs.)		115	119	126

* Information in this manual applies only to the BA revision of 0902G*** model.

** Actual vent CFM performance will vary due to application and installation conditions.

Notes:

1 All 265-volt models must use an Amana® brand sub-base (PTSB4**E) or an Amana® brand hard-wire kit (PTPWHWK4).

2 Minimum Circuit Ampacity (MCA) ratings conform to the National Electric Code; however, local codes should apply. Minimum voltage on 230/208-volt models is 197 volts; maximum is 253 volts.

3 Minimum voltage on 265-volt models is 239 volts; maximum is 292 volts.

4 Minimum voltage on 115-volt models is 104 volts; maximum is 127 volts.

5 Overcurrent protection for all units without electric heaters is 15 amps. Overcurrent protection on 265-volt models must be cartridge-style time-delay fuses (included and factory-installed on all Amana® brand 265-volt chassis). See heater perform

6 Heating capacity and efficiency based on unit operation without condensate pump.

7 Specify two-digit heater kW size to complete model number.

8 R-410A refrigerant used in all systems.

9 All units meet or exceed ASHRAE 90.1 standards.

10 All units less than 250 volts have a Leak Current Detector Interrupter (LCDI) power cord and meet UL 484 standards.

11 Refer to electric heat performance data for total MCA and recommended overcurrent protection. Amps and Watts notation refers to compressor only.

EER - Energy Efficiency Ratio per The Air-Conditioning, Heating, and Refrigeration Institute (AHRI) Test Procedures and Canadian Standards Association (CSA) Test Procedures.

COP - Coefficient of Performance per AHRI Test Procedures

Model [1, 7, 9, 10]		HEC 073H**	HEC 093H***	HEC 123H**
Voltage [1, 3]		230/208	230 / 208	230/208
Capacity (BTU/h)		7,000/7,000	9,200 / 9,000	11,900 / 11,700
Amps [11]		3.7 / 3.7	4.7 / 4.7	6.6 / 6.6
Watts [11]		555 / 530	765 / 740	1,050 / 1,040
EER		12.6 /13.1	12.0 / 12.1	11.3 / 11.2
Unit without Electric Heater				
Min. Circuit Amps [2, 5, 11]		4.3	5.6	7.9
CFM (Cool/Wet Coil)	High	330	290	340
	Low	245	264	245
CFM (Dry Coil)	High	360	310	370
	Low	270	282	270
Ventilated Air, CFM (Fan Only)**		40*	65**	40*
Dehumidification (Pints/Hr.)		1.7	2.2	1.7
Net Weight (lbs.)		106	108	110
Ship Weight (lbs.)		115	119	126

* Information in this manual applies only to the BA revision of 0902G*** model.

** Actual vent CFM performance will vary due to application and installation conditions.

Notes:

1 All 265-volt models must use an Amana® brand sub-base (PTSB4**E) or an Amana® brand hard-wire kit (PTPWHWK4).

2 Minimum Circuit Ampacity (MCA) ratings conform to the National Electric Code; however, local codes should apply. Minimum voltage on 230/208-volt models is 197 volts; maximum is 253 volts.

3 Minimum voltage on 265-volt models is 239 volts; maximum is 292 volts.

4 Minimum voltage on 115-volt models is 104 volts; maximum is 127 volts.

5 Overcurrent protection for all units without electric heaters is 15 amps. Overcurrent protection on 265-volt models must be cartridge-style time-delay fuses (included and factory-installed on all Amana® brand 265-volt chassis). See heater perform

6 Heating capacity and efficiency based on unit operation without condensate pump.

7 Specify two-digit heater kW size to complete model number.

8 R-410A refrigerant used in all systems.

9 All units meet or exceed ASHRAE 90.1 standards.

10 All units less than 250 volts have a Leak Current Detector Interrupter (LCDI) power cord and meet UL 484 standards.

11 Refer to electric heat performance data for total MCA and recommended overcurrent protection. Amps and Watts notation refers to compressor only.

EER - Energy Efficiency Ratio per The Air-Conditioning, Heating, and Refrigeration Institute (AHRI) Test Procedures and Canadian Standards Association (CSA) Test Procedures.

COP - Coefficient of Performance per AHRI Test Procedures

SPECIFICATIONS PTH G SERIES

Model [1, 6, 8, 9]		PTH 073G**	PTH 093G**	PTH 123G**	PTH 153G**	PTH 074G**	PTH 094G**	PTH 124G**	PTH 154G**
Voltage [1, 3]		230 / 208	230 / 208	230/208	230 / 208	265	265	265	265
Capacity (BTU/h)		7,100 / 7,000	9,000 / 9,000	11,600 / 11,400	14,200 / 14,400	7,600	9,100	12,000	14,600
Amps[10]		3.3 / 3.3	4.1 / 4.1	6.1 / 6.1	7.0 / 7.0	3	3.6	4.9	6.1
Watts[10]		560 / 535	705 / 685	970 / 960	1,430 / 1,410	645	755	1090	1,505
EER		12.0 / 12.4	11.9 / 12.0	11.0 / 11.1	9.9 / 9.9	11.7	12	11	9.7
Unit without Electric Heater									
Min. Circuit Amps [2, 4, 10]		4.0	5.0	7.4	8.6	3.6	4.4	6.0	7.4
CFM (Cool/Wet Coil)	High	330	330	330	390	330	330	390	390
	Low	245	245	245	340	245	245	340	340
CFM (Dry Coil)	High	360	360	360	410	360	360	410	410
	Low	270	270	270	370	270	270	370	370
Ventilated Air, CFM (Fan Only)*		40*	65*	65*	65*	65*	65*	65*	65*
Dehumidification (Pints/Hr.)		1.7	2.2	2.2	4.4	2.2	2.2	4.4	4.4
Net Weight (lbs.)		111	112	123	126	108	112	124	125
Ship Weight (lbs.)		131	127	141	143	123	127	142	142

Notes:

1. All 265-volt models must use an Amana® brand sub-base (PTSB4**E) or an Amana® brand hard-wire kit (PTPWHWK4).
2. Minimum Circuit Ampacity (MCA) ratings conform to the National Electric Code; however, local codes should apply. Minimum voltage on 230/208-volt models is 197 volts; maximum is 253 volts.
3. Minimum voltage on 265-volt models is 239 volts; maximum is 292 volts.
4. Overcurrent protection for all units without electric heaters is 15 amps. Overcurrent protection on 265-volt models must be cartridge-style time-delay fuses (included and factory-installed on all Amana® brand 265-volt chassis). See heater perform
5. Heating capacity and efficiency based on unit operation without condensate pump.
6. Specify two-digit heater kW size to complete model number.
7. R-410A refrigerant used in all systems. R-134A used in Kit Fresh Air.
8. All units meet or exceed ASHRAE 90.1 standards.
9. All units less than 250 volts have a Leak Current Detector Interrupter (LCDI) power cord and meet UL 484 standards.
10. Refer to electric heat performance data for total MCA and recommended overcurrent protection. Amps and Watts notation refers to compressor only.

EER - Energy Efficiency Ratio per The Air-Conditioning, Heating, and Refrigeration Institute (AHRI) Test Procedures and Canadian Standards Association (CSA) Test Procedures.

COP - Coefficient of Performance per AHRI Test Procedures

SPECIFICATIONS HEH H SERIES

Model [1, 6, 8, 9]		HEH073H **AXXX	HEH093H **AXXX	HEH123H **AXXX	HEH074H **AXXX	HEH094H **AXXX	HEH124H **AXXX	HEH153H **AXXX	HEH154H **AXXX
Voltage [1, 3]		230 / 208	230 / 208	230 / 208	265	265	265	265	265
Capacity (BTU/h)		7,100 /7,000	9,000 / 9,000	11,600 / 11,400	7,700	9,100	12,000	14,200 / 14,00	14,400
Amps[10]		3.9 / 3.9	4.7 / 4.7	6.6 / 6.6	3.6	4.2	5.4	7.4 / 7.4	6.4
Watts[10]		545 / 525	705 / 705	1,005 / 990	595	730	1,040	1,390 / 1,370	1,410
EER		13.0 / 13.3	12.7 / 12.7	11.5 / 11.5	12.9	12.4	11.5	10.2 / 10.2	10.2
Unit without Electric Heater									
Min. Circuit Amps [2, 4, 10]		4.6	5.6	7.9	3.6	4.9	6.4	8.9	7.7
CFM (Cool/Wet Coil)	High	340	330	340	340	330	340	390	390
	Low	245	245	245	245	245	245	340	340
CFM (Dry Coil)	High	370	360	370	370	360	370	390	390
	Low	270	270	270	270	270	270	370	370
Ventilated Air, CFM (Fan Only)*		65*	65*	65*	65*	65*	65*	65*	65*
Dehumidification (Pints/Hr.)		1.7	2.2	3.6	1.7	2.2	3.6	4.4	4.4
Net Weight (lbs.)		107	111	114	107	111	114	125	125
Ship Weight (lbs.)		122	126	131	122	126	131	142	142

Notes:

1 All 265-volt models must use an Amana® brand sub-base (PTSB4**E) or an Amana® brand hard-wire kit (PTPWHWK4).

2 Minimum Circuit Ampacity (MCA) ratings conform to the National Electric Code; however, local codes should apply. Minimum voltage on 230/208-volt models is 197 volts; maximum is 253 volts.

3 Minimum voltage on 265-volt models is 239 volts; maximum is 292 volts.

4 Overcurrent protection for all units without electric heaters is 15 amps. Overcurrent protection on 265-volt models must be cartridge-style time-delay fuses (included and factory-installed on all Amana® brand 265-volt chassis). See heater perform

5 Heating capacity and efficiency based on unit operation without condensate pump.

6 Specify two-digit heater kW size to complete model number.

7 R-410A refrigerant used in all systems. R-134A used in Kit Fresh Air.

8 All units meet or exceed ASHRAE 90.1 standards.

9 All units less than 250 volts have a Leak Current Detector Interrupter (LCDI) power cord and meet UL 484 standards.

10 Refer to electric heat performance data for total MCA and recommended overcurrent protection. Amps and Watts notation refers to compressor only.

EER - Energy Efficiency Ratio per The Air-Conditioning, Heating, and Refrigeration Institute (AHRI) Test Procedures and Canadian Standards Association (CSA) Test Procedures.

COP - Coefficient of Performance per AHRI Test Procedures

SPECIFICATIONS

PTH G SERIES

Model	PTH 073G**	PTH 074G**	PTH 093G**	PTH 123G**	PTH 153G**	PTH 094G**	PTH 124G**	PTH 154G**
Voltage [1, 3]	230 / 208	265	230 / 208	230/208	230 / 208	265	265	265
BTU/h[5]	6,500 / 6,400	6,800	8,200 / 8,000	10,600 /10,500	13,900 / 13,700	8,300	11,300	13,700
Amps[10]	3.3 / 3.3	3.0	4.1 / 4.1	6.1 / 6.1	7.0 / 7.0	3.6	4.9	6.1
Watts[10]	560 / 535	585	705 / 685	970 / 960	1,350 / 1330	715	1,065	1,335
COP[5]	3.4 / 3.5	3.4	3.4 / 3.4	3.2 / 3.2	3.0 / 3.0	3.4	3.1	3.0
CFM (Dry)	360	360	360	360	410	360	410	410

Heating Capacity	PMH 073G*	PMH 074G*	PMH 093G*	PMH 094G*	PMH 123G*	PMH 124G**	PMH 153G**
Voltage [1, 3]	230 / 208	265	230	265	230	265	230
BTU/h[5]	6,200 / 6,100	6700	7,800 / 7,600	8,000	10,600 / 10,400	11,300	13,800 / 13,600
Amps[10]	3.4 / 3.4	3.1	4.2 / 4.2	4.2	6.2 / 6.2	5.0	7.4 / 7.4
Watts[10]	530 / 495	595	670 / 655	710	1,000 / 980	1065	1345 / 1325
COP[5]	3.4 / 3.5	3.3	3.4 / 3.4	3.3	3.1 / 3.1	3.1	3.0 / 3.0
CFM (Dry)	360	360	360	360	360	360	410

Notes:

1 All 265-volt models must use an Amana® brand sub-base (PTSB4**E) or an Amana® brand hard-wire kit (PTPWHWK4).

2 Minimum Circuit Ampacity (MCA) ratings conform to the National Electric Code; however, local codes should apply.
Minimum voltage on 230/208-volt models is 197 volts; maximum is 253 volts.

3 Minimum voltage on 265-volt models is 239 volts; maximum is 292 volts.

4 Overcurrent protection for all units without electric heaters is 15 amps. Overcurrent protection on 265-volt models must be cartridge-style time-delay fuses (included and factory-installed on all Amana® brand 265-volt chassis). See heater perform

5 Heating capacity and efficiency based on unit operation without condensate pump.

6 Specify two-digit heater kW size to complete model number.

7 R-410A refrigerant used in all systems. R-134A used in Kit Fresh Air.

8 All units meet or exceed ASHRAE 90.1 standards.

9 All units less than 250 volts have a Leak Current Detector Interrupter (LCDI) power cord and meet UL 484 standards.

10 Refer to electric heat performance data for total MCA and recommended overcurrent protection. Amps and Watts notation refers to compressor only.

EER - Energy Efficiency Ratio per The Air-Conditioning, Heating, and Refrigeration Institute (AHRI) Test Procedures and Canadian Standards Association (CSA) Test Procedures.

COP - Coefficient of Performance per AHRI Test Procedures

HEH H SERIES

Heating Capacity[1]	HEH073H**AXXX	HEH093H**AXXX	HEH123H**AXXX	HEH074H**AXXX	HEH094H**AXXX	HEH124H**AXXX	HEH153H**AXXX	HEH154H**AXXX
Voltage [1, 3]	230 / 208	230 / 208	230/208	265	265	265	265	230
BTU/h[5]	6,500 / 6,400	8,200 / 8,000	10,600 /10,500	6,800	8,300	11,400	13,700	13,900 13,700
Amps[10]	3.9 / 3.9	4.7 / 4.7	6.6 / 6.6	3.6	4.2	5.4	6.4	7.4 / 7.4
Watts[10]	545 / 525	665 / 650	910 / 930	550	690	1,075	1,295	1,310 / 1,295
COP[5]	3.7 / 3.8	3.6 / 3.6	3.4 / 3.3	3.6	3.5	3.1	3.1	3.1 / 3.1
CFM (Dry)	360	370	370	360	370	370	410	410

Notes:

1 All 265-volt models must use an Amana® brand sub-base (PTSB4**E) or an Amana® brand hard-wire kit (PTPWHWK4).

2 Minimum Circuit Ampacity (MCA) ratings conform to the National Electric Code; however, local codes should apply.
Minimum voltage on 230/208-volt models is 197 volts; maximum is 253 volts.

3 Minimum voltage on 265-volt models is 239 volts; maximum is 292 volts.

4 Overcurrent protection for all units without electric heaters is 15 amps. Overcurrent protection on 265-volt models must be cartridge-style time-delay fuses (included and factory-installed on all Amana® brand 265-volt chassis). See heater perform

5 Heating capacity and efficiency based on unit operation without condensate pump.

6 Specify two-digit heater kW size to complete model number.

7 R-410A refrigerant used in all systems. R-134A used in Kit Fresh Air.

8 All units meet or exceed ASHRAE 90.1 standards.

9 All units less than 250 volts have a Leak Current Detector Interrupter (LCDI) power cord and meet UL 484 standards.

10 Refer to electric heat performance data for total MCA and recommended overcurrent protection. Amps and Watts notation refers to compressor only.

EER - Energy Efficiency Ratio per The Air-Conditioning, Heating, and Refrigeration Institute (AHRI) Test Procedures and Canadian Standards Association (CSA) Test Procedures.

COP - Coefficient of Performance per AHRI Test Procedures

SPECIFICATIONS

PTH G SERIES
HEH H SERIES
PMH & PMC SERIES

Voltage	Electric Heater Size (kW)	No. of Stages	Nominal Heating (BTU/h)			Total Watts[6]	Total Amps	Min. Circuit Ampacity[2]	MOD[4] (amps)	Power Cord
			@ 230V	@ 208V	@ 265V					
230/208V	2.5	1	8,500	6,800	- -	2,570 / 2,115	11.2 / 10.1	14.1	15	6-15 P
230/208V	3.5	1	12,000	9,900	- -	3,570 / 2,935	15.5 / 14.1	19.5	20	6-20 P
230/208V	5	1	17,100	14,000	- -	5,070 / 4,160	22.1 / 20.0	27.6	30	6-30 P
265V	2.5	1	- -	- -	8,500	2,570	9.7	12.2	15	7-20 P
265V	3.7	1	- -	- -	12,600	3,770	14.2	17.9	20	7-20 P
265V	5	1	- -	- -	17,100	5,070	19.2	23.9	25	7-30 P

Notes:

1 All 265-volt models must use an Amana® brand sub-base (PTSB4**E) or an Amana® brand hard-wire kit (PTPWHWK4).

2 Minimum branch circuit ampacity ratings conform to the National Electric Code; however, local codes should apply.

3 Minimum voltage on 230/208-volt models is 197 volts; maximum is 253 volts.
Minimum voltage on 265-volt models is 239 volts; maximum is 292 volts.

4 Overcurrent protection for all units without electric heaters is 15 amps. Overcurrent protection on 265-volt models must be cartridge-style time-delay fuses (included and factory-installed on all Amana® brand 265-volt chassis).

5 Heating capacity and efficiency based on unit operation without condensate pump.

6 Total watts for 15,000 BTU/h models; subtract 20 watts for PT07/09/12

7 Specify two-digit heater kW size to complete model number.

8 R-410A refrigerant used in all systems.

9 All units meet or exceed ASHRAE 90.1 standards.

10 All units less than 250 volts have a Leak Current Detector Interrupter (LCDI) power cord and meet UL 484 standards.

EER - Energy Efficiency Ratio per The Air-Conditioning, Heating, and Refrigeration Institute (AHRI) Test Procedures and Canadian Standards Association (CSA) Test Procedures.

COP - Coefficient of Performance per AHRI Test Procedures

VOLTAGE REQUIREMENTS

OPERATING VOLTAGES

Use a voltmeter, check the voltage at the outlet.
The reading must be within the minimums and maximums shown below for the operating voltage.

Operating Voltages		
Unit Voltage	**Voltage Utilization Range**	
Rating	**Minimum Voltage**	**Maximum Voltage**
115	104	127
230/208	197	253
265	238	292

• LCDI or AFCI Power Cords - Underwrites Laboratories and the National Electric Code (NEC) now require power cords that sense current leakage and can open the electrical circuit to the unit on units rated at 250 volts or less. In the event that unit does not operate, check the reset button located on or near the head of the power cord as part of the normal troubleshooting procedure.

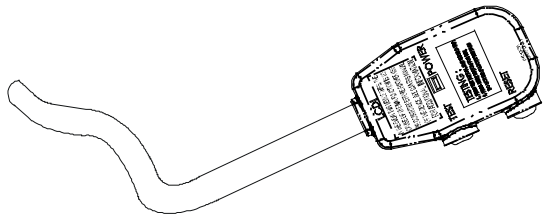

LCDI Power Cord

Important Note

Cord connection to a wall socket is not permitted for 265-volt units. All 265-volt units must be hard wired using the hard wire kit or make use of the plug-in receptacle in the standard subbase.

Sequence of Operation

Cooling mode

To set the unit for the cooling mode, press the COOL button on the touch pad, then press the + Plus or – Minus button to set the desired temperature and press the fan speed button to select LOW, HIGH or Auto. If you select Auto the fan speed will automatically switch between LOW and HIGH based on the temperature of the room and the set point. If temperature is more than 5 degrees higher than the set point the fan will come on in HIGH and then switch to LOW when the room temperature is within 5 degrees of the set point.
Once you have selected COOL, the desired temperature and the FAN selection, the fan will come on first and then the compressor will come on approximately 2 seconds later. When the room temperature has reached the desired set point the compressor will shut off and the fan will continue to run for approximately 30 seconds and then will shut off.

Heating Mode

If the model is a PTC** the unit is an electric heat only unit which means the fan and electric heating element will be the only things that will operate in the heating mode.
To set the unit for heat mode press the HEAT button on the touch pad and then press the + Plus or -Minus buttons to set the desired temperature, and press the fan speed button to select LOW, HIGH or Auto. If you select Auto the fan speed will automatically switch between LOW and HIGH based on the temperature of the room and the set point.
If temperature is more than 5 degrees higher than the set point the fan will come on in HIGH and then switch to LOW when the room temperature is within 5 degrees of the set point.
Once you have selected the HEAT, the desired temperature and the FAN selection, the fan and the electric heat strip will come on. When the room temperature has reached the desired set point the electric heat strip will shut off and the fan will continue to run for approximately 30 seconds and then shut off.

Heat Mode

If the model is a PTH** the unit is a heat pump and will operate in electric heat or reverse cycle heat pump mode.
To set the unit for heat mode press the HEAT button on the touch pad and then press the + Plus or -Minus buttons to set the desired temperature, and press the fan speed button to select LOW, HIGH or Auto. If you select Auto the fan speed will automatically switch between LOW and HIGH based on the temperature of the room and the set point.
If temperature is more than 5 degrees higher than the set point the fan will come on in HIGH and then switch to LOW when the room temperature is within 5 degrees of the set point.
Once you have selected the HEAT, the desired temperature and the FAN selection, the temperature of the room, the outdoor ambient temperature and the desired set point will determine if the unit will come on in electric heat or heat pump and bring on the compressor. The room temperature will need to be within 4 degrees of the unit's set point for the compressor
to come on in the heat pump mode. If the room temperature is more than 4 degrees higher than the set point the unit will come on in electric heat only. If the electric heat comes on the unit will remain in electric heat for the complete cycle. When the desired room temperature is reached the unit will cycle of the heat strip and the fan. When the unit cycles back on the unit will bring on the compressor in the heat pump mode and operate with the heat pump. The heat pump will continue to operate until the outdoor coil reaches approximately 27 degrees at which time the outdoor coil thermistor will shut off the compressor and bring the unit back into the electric heat only operation. The outdoor coil thermistor will keep the heat pump locked out until the thermistor is seeing an outdoor coil temperature

SYSTEM OPERATION

of above 33 degrees. Once above 33 degrees the unit will return to heat pump operation on the next call for heat. When the room temperature has reached the desired set point, electric heat or compressor will shut off and the fan will continue to run for approximately 30 seconds and then shut off.

NOTE:

The heat pump and electric heat DO NOT operate together, it is either in electric heat or heat pump mode.

Control Board Characteristics

- Automatic 3-minute Compressor Lockout - After the compressor cycles off, it will not restart for three minutes. This feature is enabled in standard or remote thermostat control.
- Compressor lock-in feature- Whenever the compressor is switched from off to on because the room temperature has risen above or fallen below the specified limit it will remain on for at least four minutes. However , if the thermostat point is changed during the four minutes this lock in feature is overridden.
- Automatic 2nd Stage Electric Heat (Heat Pump Models)- If the room temperature falls to 4°F below the set point temperature, the reverse cycle heat pump is shut off and the strip heat is turned on.
- Automatic Freeze Protection - Whenever power is supplied to the unit and the master switch is in the ON position, automatic freeze protection is active. If the thermistor senses temperature below 40°F+/-5°F, the fan motor and electric strip heat (or hydronic heat, if applicable) are switched on. The heater and fan will remain on until the Thermistor senses a temperature of 43°F.
- Remote Thermostats - Always use an approved thermostat supplied by the manufacturer. A wall thermostat that has not been approved by the manufacturer may not work correctly with this unit.
- Remote Functions - All functions are controlled by a wall mounted thermostat.
- Remote Fan- When GL terminal is connected to R terminal the remote fan speed is switched to low. GH terminal connected to the R terminal fan speed is switched to high.
- Fuse Protection- The fuse protection has been maximized on the 24 volt circuit so accidental groundings of the external terminals will not result in a burned out board. The unit may be operated in standard mode if the fuse is blown. There will be an auxiliary fuse supplied with the board. It will be attached to the main fuse by a plastic clip. The fuse is a 500 ma fuse. When replacing the fuse always use the correct fuse part #M0804205.
- Random Delay - When the master switch is turned on or power is reapplied to the control, all functionality will be locked out for a random period between two and four minutes, if Y or W inputs are active in remote or the mode switch is set to HI/LO heat or cool. The delay can be avoided if the front desk terminals are closed for more than two seconds, or the mode switch is in the off or fan only position.
- Indoor Ambient Thermistor- The Indoor Ambient Thermistor senses actual room temperature.
- Indoor/Outdoor Coil Thermistors- In the cooling mode, if the compressor is engaged continuously for 20 minutes and the Indoor Coil Thermistor is below 30 degrees the compressor is disengaged until the ICT rises above 45 degrees. The Outdoor Coil Thermistor senses coil temperature which correlates to outdoor air temperature. Heat pump operation can operate as low as 24°F outdoor temperature depending upon humidity conditions and/or the balance point of the system. After defrost is initiated, the compressor remains off for at least thirty minutes and resumes operation when the outdoor coil temperature reaches 33°F. Electric resistance heat will maintain the ambient room temperature anytime the temperature falls 4°F below the room set point temperature.
- Load Shedding-The IN & COM terminals are used for load shedding. A switch can be added to close the circuit to lock out the compressor and electric heat when the power company or energy management system is trying to reduce its load for a specified time.
- Sample Before Start - The SBS routine is used in the cooling mode. This routine runs the unit fan on low speed for up to 120 seconds. The sample fan is aborted if compressor demand is detected. To avoid unnecessary sampling the period between samples will be based on specific room conditions. The default sample before start period after a power up is 5 minutes. The period is corrected every time a sample run is completed without a compressor demand. The minimum sample period is 5 minutes and the maximum period is 15 minutes.
- Front Desk Control - The front desk control terminals are IN and COM. These terminals will provide a connection for a user supplied switch that will allow the operation of the unit to be remotely defeated.
- Transfer Fan- A transfer fan may be used if a user supplied relay is connected to IN and COM. Make sure the relay is a manufactured approved relay. The relay will be energized whenever the blower/fan relay is energized.
- Emergency Hydronic Heat - A switch can be added to the IN & COM terminals to close the circuit to enable the fan, enable the heater relay and lockout the compressor to continue minimum operations with auxiliary power, if the main power goes out.

OPERATING CONTROLS

Users Controls

A 7 button touch key pad, located behind the control door, controls both temperature and operation mode. The key pads can be used alone or in combination.

SYSTEM OPERATION

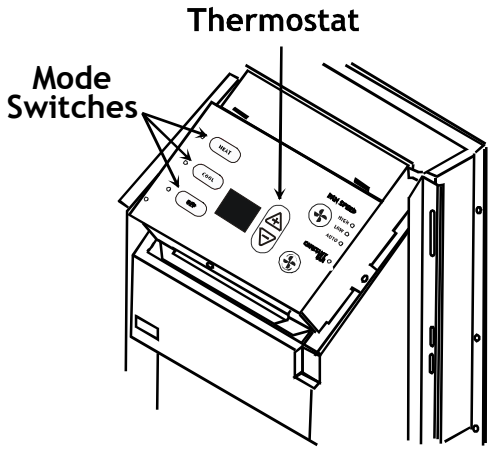

Users Controls "Digital Touch Pad"

A seven button touch key pad located behind the control door controls both temperature and operation mode. The key pads can be used alone or in combination.

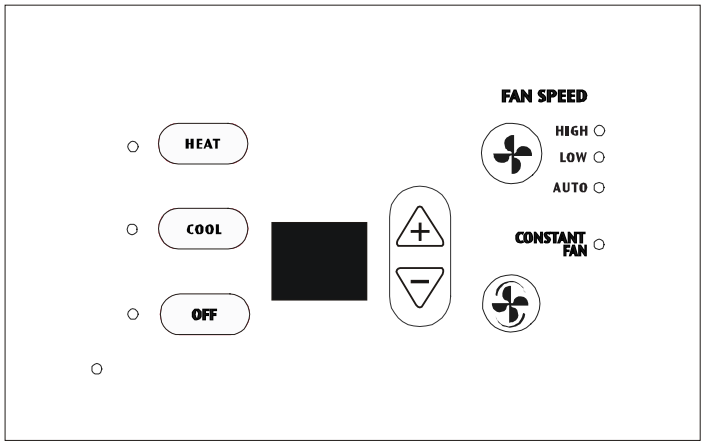

Touch Pad With Display User Controls

Thermostat Setting

7 BUTTON TOUCH PAD WITH DISPLAY

Pressing the COOL thermostat control and the up or down arrows will provide a cooler room temperature, respectively. Pressing the HEAT thermostat control and the up or down arrow keys will provide a warmer room temperature.

Fan Speed

The fan speed touch key will deliver high, low or auto fan speed to circulate room air. NOTE: The AUTO selection will not be available if a fan speed is selected without COOL or Heat selection.

Fan Operation HIGH or LOW with HEAT or COOL mode selected - The selected fan speed shall run in the selected speed.

Fan Operation AUTO with HEAT or COOL mode selected - The fan will run in low and high speed. The changes in fan speed are automatic. See "Configuration Settings" section for further details.

Diagnostic Light

The green diagnostic light located in the lower left hand corner of the touchpad and indicates operation warnings. This light usually indicates that either the filter or coils need cleaning. Please refer to the Maintenance and Cleaning section for the proper cleaning procedure. If this light is still on after cleaning, please refer to the Diagnostic & Status Report section for assistance.

Master Switch

The master switch disconnects power to all of the system components. When this switch is in the off position, the compressor, fan motor, reversing valve, and electric resistance heater will all be de-energized.

Remote/Standard

The remote/standard configuration is used to change the control of the unit from the standard on board controls in the standard mode, to a remote wall mounted thermostat in the remote mode. For remote control configuration settings, refer to Configuration Settings.

Fan Cycle Configuration

The fan cycle configuration sets the operational mode of the fan. In the ON position, the fan will run continuously whenever the unit is in the heat or cool mode. In the AU position, the fan will cycle on and off with the compressor or electric heater when the unit is in the cool or heat mode.

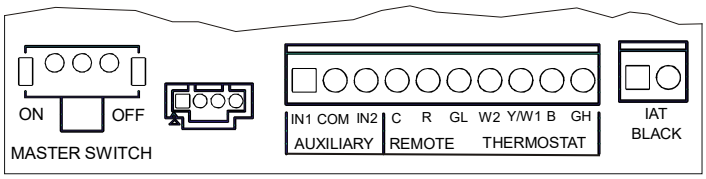

Control Board User Inputs*
*NOTE: The PTAC Wire Harness Kit (PWHK01G70) is required for the auxiliary or remote thermostat options.

Wired Thermostat

The C, R, GL, W2, Y/W1, B/O, and GH terminals provide control inputs for a "manufacturer-approved" remote wall mounted thermostat. The "B" terminal can be configured to become "O" if needed see Configuration Settings For remote control thermostat operation, refer to the Remote Thermostat Operation section.

SYSTEM OPERATION

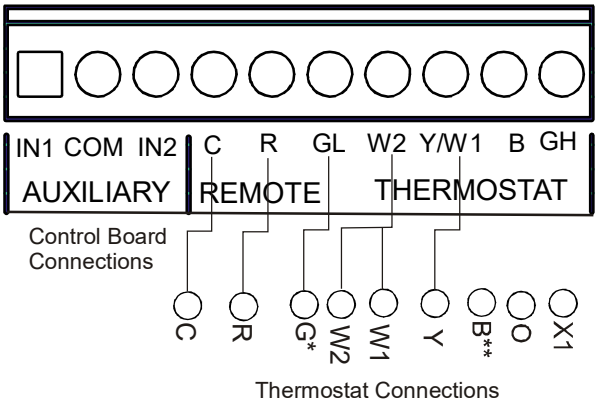

*NOTE: For high speed fan operation, connect “G” to “GH”.
** NOTE FOR THE B TERMINAL: If unit is a heat pump connect B from stat to B on the board.

IMPORTANT NOTE: Disconnect power to the unit and/or turn the Master Switch on the control board to OFF when connecting or altering wiring to any terminal. Failure to do so may result in shorting the fuse or damaging the control board.

MAXIMUM WIRE LENGTH FOR FRONT DESK SWITCH	
Wire Size (AWG)	**Maximum Length Allowed (ft)**
#24	400
#22	600
#20	900
#18	1500
#16	2000

The following figure shows a wiring schematic for connecting the front desk switch to the unit.

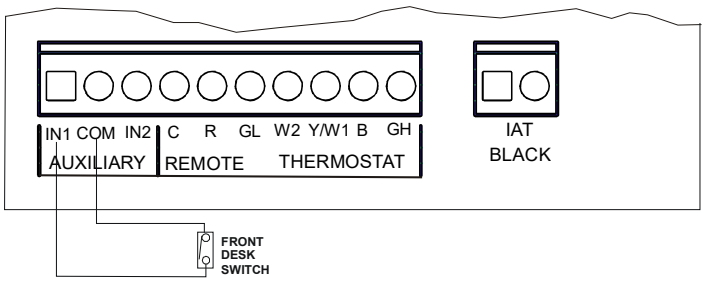

Front Desk Control (IN1, IN2, COM)

The COM and (IN2 or IN1) terminals provide control inputs for a front desk switch. Shorting across the terminals will disable unit operation. The only control function which will remain active when these terminals are shorted is freeze protection. Any switch which will produce a short circuit across these two terminals can be used as a front desk switch. The contact resistance of the switch, when closed, must be less than 200 ohms for the front desk feature to operate properly. Table 3 shows the maximum wire length and corresponding gage size for installation of a front desk switch. The following figure shows a wiring schematic for connecting the front desk switch to the unit.
If the unit is configured for wired unrented setback energy management (see Configuration Settings section u8 and u9). If IN* and COM are shorted, the unit will go into setback temperatures for cooling and heating as configured in c3 and c4 (see Configuration Settings). Unit operation will be disabled. “Fd” (see Diagnostic Codes) will appear on the display. This allows the room to quickly recover to a comfortable temperature when the room is occupied.

Wireless Communications

PTAC models PT**G*** have the option to use a wireless thermostat and door sensor. The thermostat and /or door sensor will require an antenna for communication with the digital control board.
Antenna Installation For DT01* Kit
A DT01* antenna must be installed on the digital PTAC to allow operation of either the DS01* remote RF thermostat or a DD01* combination PIR motion sensor and door switch.

Preparation

1. Disconnect power to the unit by unplugging the power cord at the wall outlet or subbase, or disconnect power at the fuse box or circuit breaker.
2. If the cabinet front is screwed to the chassis, remove the 1/4” screw (or screws). See following figure.

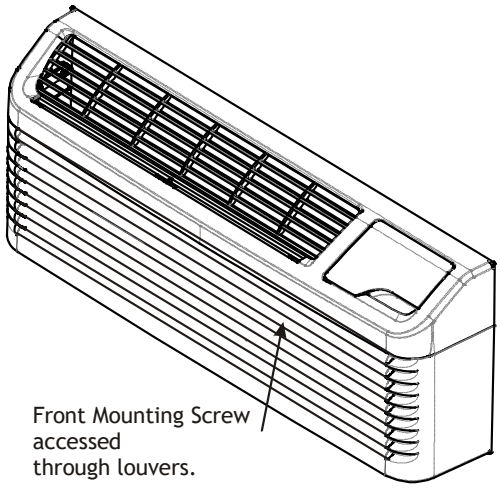

3. Remove cabinet front from chassis by tilting the bottom of the front forward, lifting slightly up and forward.
4. Mount the antenna as high up on the control panel as

possible and as far to the right as possible in a location that will not interfere with the reinstallation of the PTAC polymer room front. Mark holes for screw location. Remove antenna housing and drill two 1/8” holes where marked. Some units may have the holes already pre-drilled in the correct location.

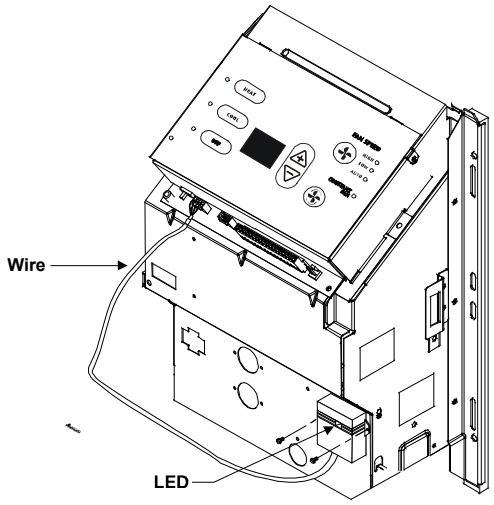

DT01* Mounting

5. Remove antenna cable and route cable through opening in bottom of antenna housing.
6. Mount antenna housing with two screws as shown in figure. (NOTE: The Amana® brand logo should be in the lower right hand corner).
7. Plug wire harness from antenna into connector on the control board to the right of the master switch, being careful not to bend and/or break the wires when you connect the cable to the PTAC. Gently push the connector into place by pushing on the edge of the connector with your thumb nails. Avoid pushing directly on the wires.
8. Restore power to the PTAC unit.
9. Reinstall the polymer room cover.

NOTE: The LED must be oriented at the top of the antenna housing (the Amana® brand logo will be on the lower right) for proper unit operation.

Wireless Thermostat

NOTE: A DT01* must be installed on the digital PTAC unit for the DS01* to be operable.
Skip these steps if not installing.

1. Select thermostat mounting location about five feet above the floor, on an inside wall, out of direct sunlight, away from sources of radiant heat (lamps, fireplaces, heating and air conditioning equipment, etc.), away from windows or door to the outside, and avoid areas with poor air circulation. If the PIR in the thermostat is to be used with a DD01* device as a 2nd motion sensor, point the thermostat towards the area where you are requiring additional motion sensing. Ensure location is out of the path of foot traffic where a person might accidentally bump into the thermostats and damage the device.
2. Remove thermostat from mounting plate by pulling apart at the bottom of the thermostat about 1”, and slide thermostat up to release from the top of the mounting plate.
3. Place thermostat mounting plate against the wall at desired location and mark placement of mounting holes. Make sure the UP arrow is pointing up on the mounting plate.
4. If mounting in drywall, tap plastic anchors into wall. For other surfaces, drill a 3/16” hole.
5. Screw mounting plate to the wall. DO NOT SNAP THERMOSTAT INTO PLACE UNTIL AFTER BINDING PROCESS. See Binding Instructions.
6. Install four (4) AA batteries (included) into the back of the thermostat. Terminals are marked “+” and “-” for polarity.

NOTE: Do not install thermostat on wall plate until all configuration settings and binding processes have been completed.

Wired Power Option

1. If the option for wired power is used, the two thermostat wires (20 gauge minimum field supplied) can be connected to the thermostat.
2. Route wires through the opening in the mounting plate.
3. Loosen set screws on wired terminal and insert wires into the opening. Tighten set screws.
4. Connect wires at PTAC unit to terminal pins C and R. The wire harness kit PWHK01C is required for this connection.

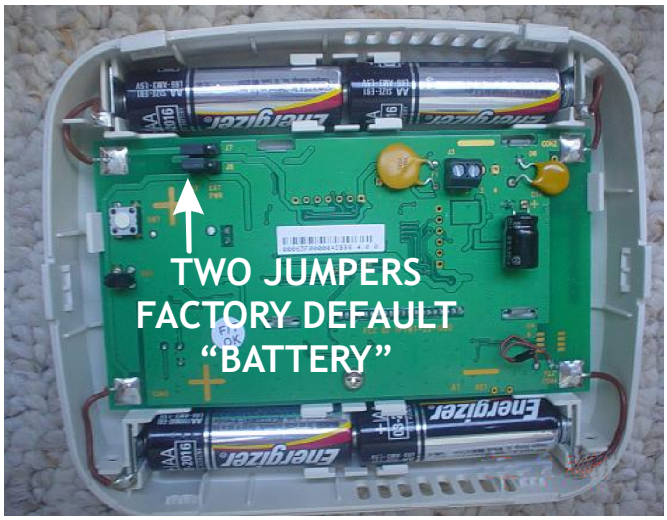

BATTERY CONNECTION

NOTE: For battery connection the 2 jumpers must be positioned as shown above, with jumpers on the center & left.

SYSTEM OPERATION

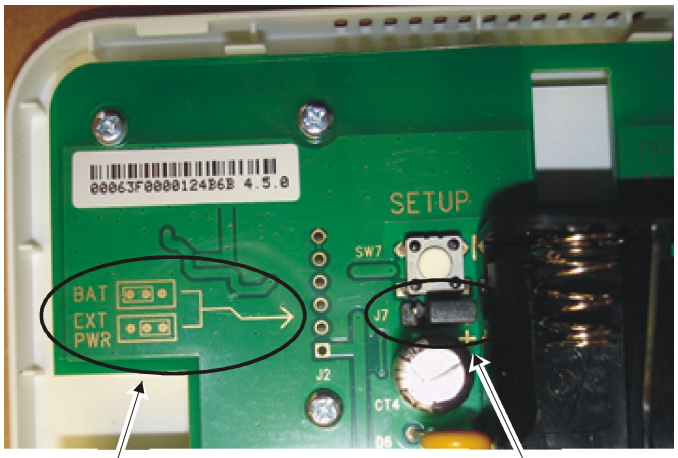

Jumper Placement Description

Jumper in position for external power

BATTERY POWERED
NOTE: For battery powered, the 2 jumpers must be positioned on the center and left pins. See jumper pin location in photo above.
POWERED CONNECTION
NOTE: For external power connection, the 2 jumpers must be positioned on the center and right pins. See jumper location in photo above.

External Power Connections

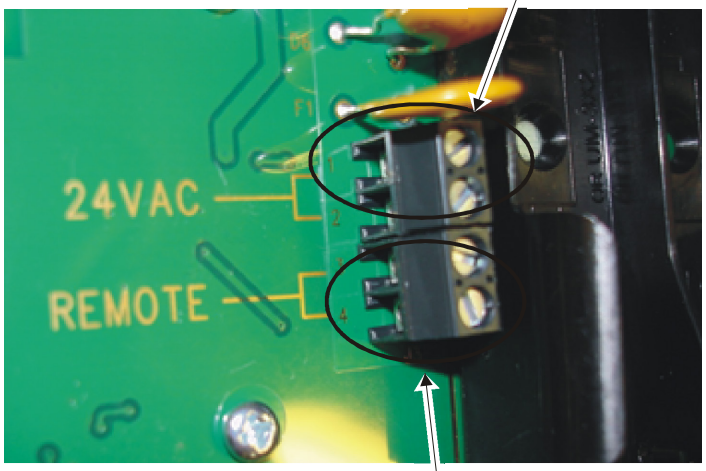

Wired Door Switch Connections

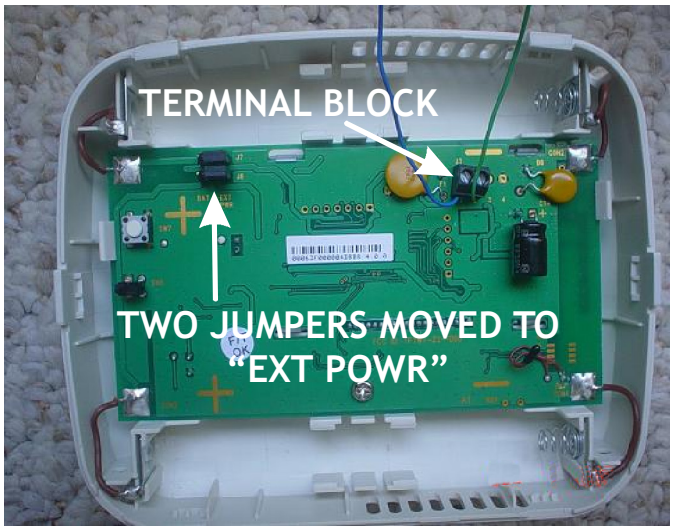

Mounting Sensor/Door Magnet Installation for DD01e AND dd01f Kits

DDO1E and DD01F must be mounted on the top door frame as close to the door as possible in the horizontal position.
A DT01A must be installed in the PTAC unit for the DD01E or DD01F to be operable.
Skip these steps if not installing.

1. Remove motion sensor from mounting plate by pulling apart.
2. Mount the back plate on the door trim directly above the door using the enclosed screws. (Position so the UP arrow is pointing up.) Mount the DD01E as low as possible on the door frame to be as close to the moving part of the door as possible without interfering with the door opening or closing. Choose a location for mounting the back plate that will provide good coverage of the PIR for motion into the room. Make sure that the DD01E will not interfere with the normal opening and closing of the door.

DO NOT SNAP MOTION SENSOR IN PLACE UNTIL AFTER BINDING PROCESS.
See Binding instructions.

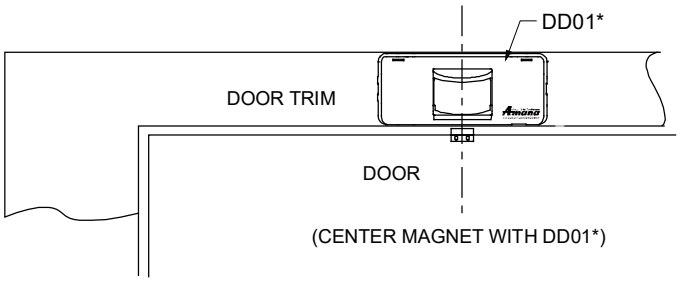

DD01E and DD01F Mounting

SYSTEM OPERATION

3. Install two (2) AA batteries (included) into the back of the thermostat. Terminals are marked “+” and “-” for polarity. Do NOT put batteries into the device until AFTER the magnet location is selected to test.WIRED

Wired Magnet and Powered Door Sensor Option

In cases where there is no top door frame, the sensor will need to be mounted on the wall next to the door. In these cases a wired magnet (a field supplied single pole single throw wired magnet) can be recessed or surface mounted and wired to the door sensor. The magnet will be a recessed style magnet with wired switch. The wires for the sensor (20 gauge field supplied) in the magnet will need to be run during construction. Two wires will be run from the door sensor location to the PTAC unit; the remaining two wires will be run from the magnet location to the sensor location. The door sensor has four (4) terminal locations for wired power and/or wired magnets. The two (2) terminals closest to the binding button are for wired magnet and the top two (2) terminals are for wired power.
Run the magnet wires through the opening in the center of the door sensor wall plate.

Connecting Magnet

Using a pocket size straight blade screw driver push down on the terminal button to open the socket, insert wire into socket and release the terminal button. Insert one wire into each of the two (2) terminals. See image below for wire locations.

Power Connection

If using the wired powered option for the door sensor, using a pocket size straight blade screw driver, push down on the terminal button to open the socket. Insert wire into socket and release the terminal button. Insert one wire into each of the two (2) terminals. See following for wire locations. Connect the power wires from the door sensor to the PTAC on terminals C & R. The wire harness kit PWHK01C is required for this connection.

Viewed from the back with the power block in upper right corner.

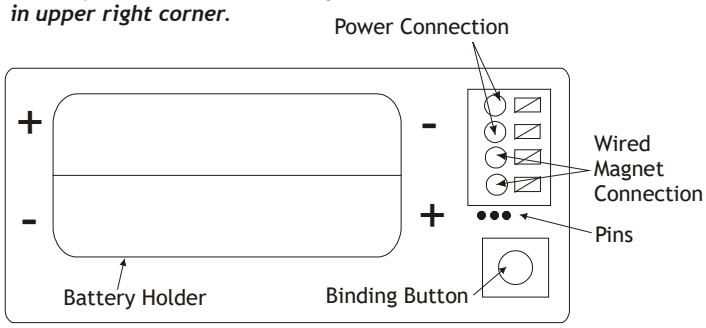

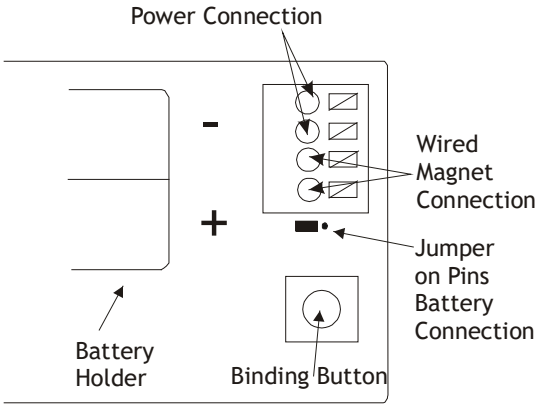

Note: For battery connection, the jumper must be placed as shown above

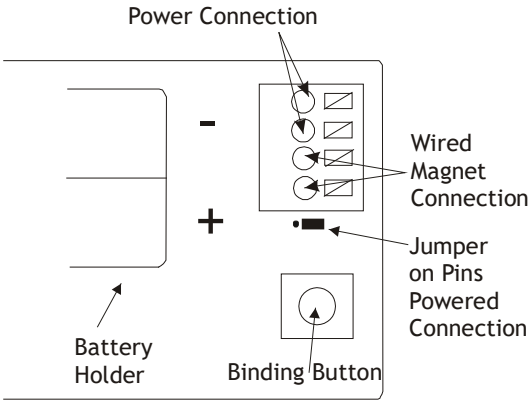

Note: For 24v powered connection, the jumper must be placed as shown in preceding graphic.

Door Magnet Installation

NOTE: Magnet buckets are shipped from the factory with the magnets in position A. The position may change based on the door and door frame alignment on page 23.

Mount the door magnet holder on the front of the door where it will be as close as possible to the bottom of the motion sensor but no more then 1/8” from the bottom center of the motion sensor (DD01E or DD01F) when the door is closed.

Select the correct slot in the magnet holder (there are three slots) to obtain 15/16” from back of sensor mounting plate to the center of the magnet. (If you can easily slide a business card between the magnet and the DD01E or DD01F sensor, unit is properly placed vertically.) See following image for magnet and sensor alignment.

Screw in place with the 2 screws provided. Open and close the door to make sure that the magnet holder and motion sensor will not interfere with normal opening and closing of the door. See following images.

SYSTEM OPERATION

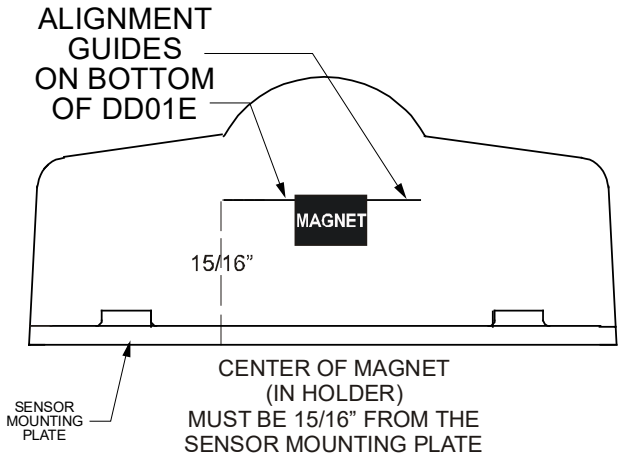

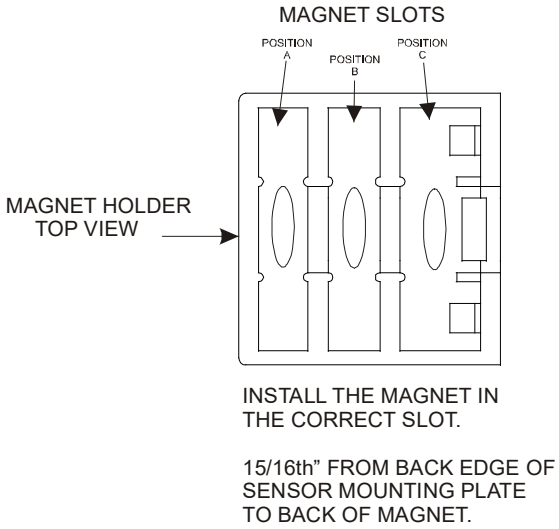

Do NOT install batteries until you are ready to test the magnet location with DD01E.

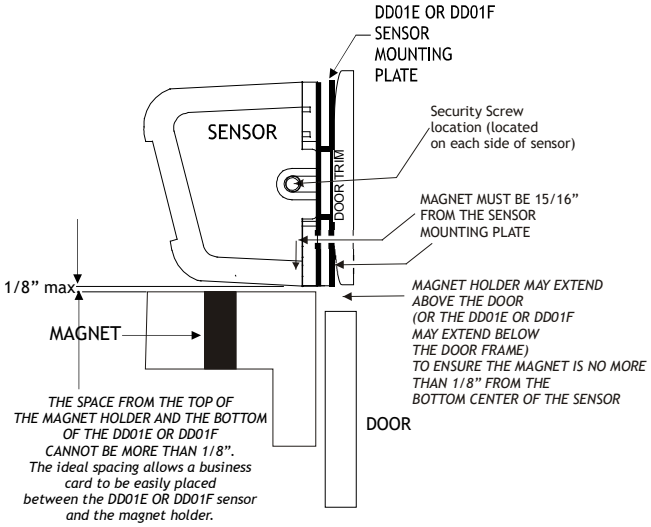

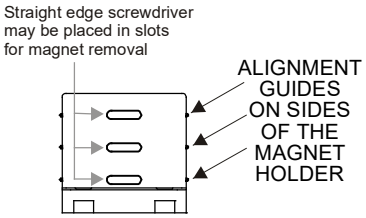

Select one of the three slots that places the magnet 15/16” from the sensor mounting plate on the door frame. See following examples. The door frame and door usually will not align. Place holder on the door and select the slot that places the magnet as close as possible to the 15/16” depth from the back of the DD01* mounting plate.
NOTE: To install bucket to extend into the room, place provided shim in appropriate slot.

The following figures show the magnet 15/16” from the sensor mounting plate in different slot positions (A, B & C).

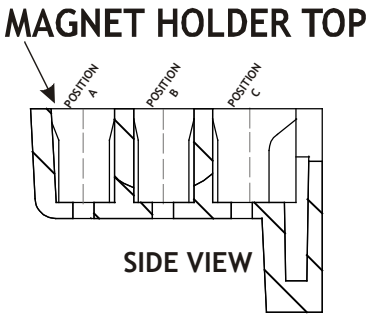

SYSTEM OPERATION

CONSTRUCTION STYLE 1
Place magnet in Position A in instances when the door and frame align.

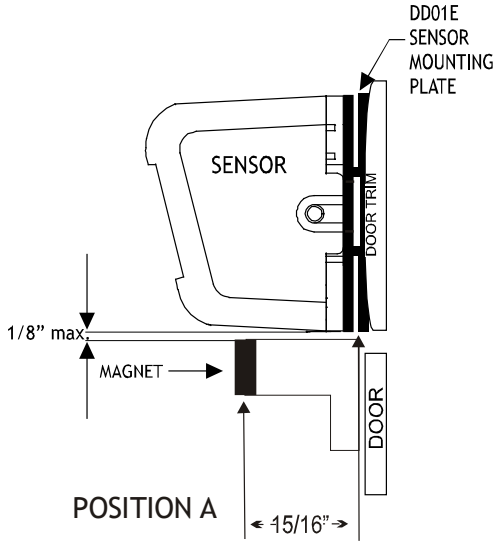

CONSTRUCTION STYLE 2
Place magnet in Position B in instances when the door extends into the room beyond the door frame.

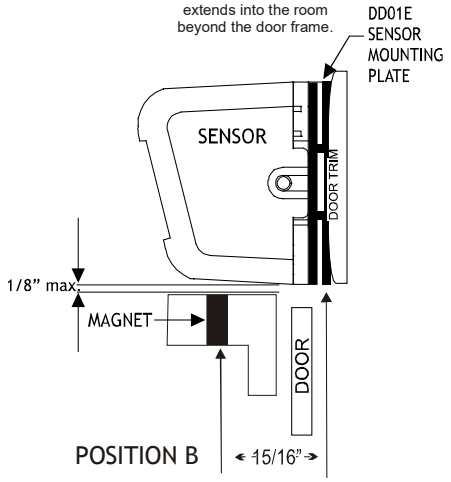

CONSTRUCTION STYLE 3
Place magnet in Position C in instances when the door extends into the room beyond the door frame.

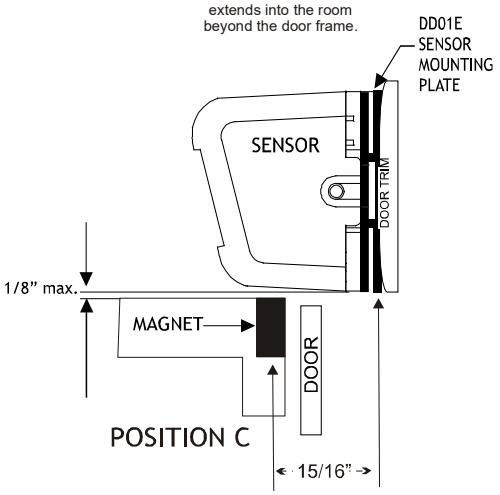

CONSTRUCTION STYLE 4
Place magnet in Position A in instances when the door frame extends into the room beyond the door.

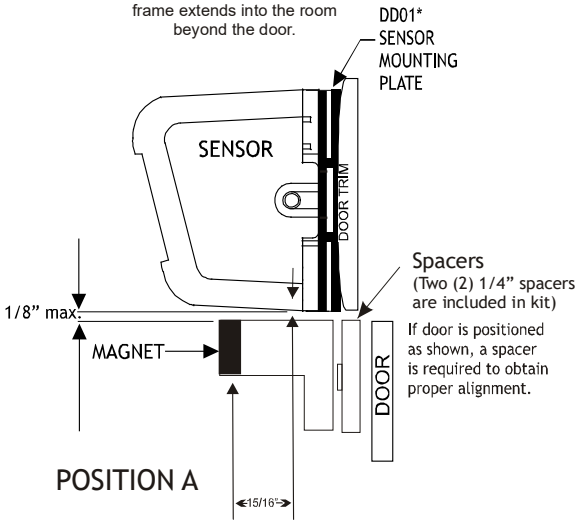

Above shows magnet 15/16” from the sensor mouting plate in different slot positions.

NOTE: Two (2) 1/4” spacers are provided in this kit for instances where the door is recessed behind the door trim. See Construction style 4.

There is a line on the bottom of the DD01E and DD01F to assist in aligning the magnet in the proper bucket location.

Above graphics are for example only. Always measure and place the magnet in the proper slot to obtain the 15/16” needed between the magnet and the sensor mounting plate on the door frame.

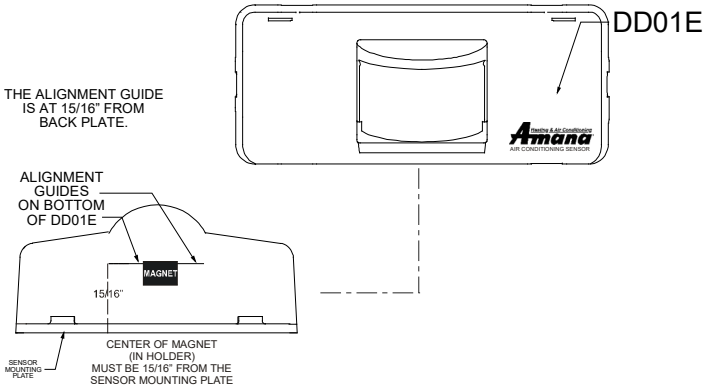

MPORTANT NOTE: When properly installed, the center line mark on the bottom of the DD01E will line up with the center of the line of the magnet holder containing the magnet. Choose magnet position A, B, or C to align the magnet 15/16” from the back of the DD01E or DD01F.

Door Sensor Operation Verification

NOTE: Do not attempt to bind a DD01E unless proper operation has been validated.
To verify that door sensor is installed properly:

SYSTEM OPERATION

1. Install batteries into DD01E or DD01F and snap sensor onto wall plate.
2. Close the door. Green light in lens should illuminate. Open door and green light will turn off. Repeat this step several times to ensure door sensor is operating correctly.

Procedure must be accomplished within one minute. If not accomplished within one minute, remove batteries and repeat Steps 1 & 2.

Configuration Settings

The PTAC control will automatically self-configure to work with the wall thermostat (DS01E Kit) if installed and bound. The PTAC control will automatically self-configure to activate pre-configured energy management routine when the DD01E or DD01F is installed and bound to the PTAC. Additionally, the setback times and setback temperatures can be changed using the configuration settings. If you are using DP01* or DL01E Front Desk Platform, the PTAC control will need to be configured to identify its room number placement.

Standard and DS01E Configuration

Entering Room Number (Skip if not using DP01* Front Desk Platform) IN CONFIRGURATION MODE

To enter configuration feature mode:

1. Press and hold the up and down arrow keys at the same time and press the OFF key twice within a two (2) second time frame then release the .

   The display will indicate - -. Press the HEAT key one time. The display will then alternate between C1 and 0.

1. The PTAC control can be set for a 4-digit room number. To select the first two digits (floor), press the **HEAT** HEAT key until C4 appears, then press the up and down arrows to select the first two digits.
2. To select the last two digits of the room number, press the **HEAT** HEAT key until appears, then press the up and down arrows to select the last 2 digits of the room number.

   For example for Room “201”, press the **HEAT** HEAT key until appears, then press the updown arrows to select “02”: C4 = 02.

   Next to select the last two digits of the room number, press the **HEAT** HEAT key until C5 appears, then press the up and down arrows to select “01”: C5=01.

3. If a room contains more than one unit (a suite), a suffix must also be entered to identify which unit is in the main room and which unit(s) are in bedroom(s). Master unit ALWAYS MUST have a 01 suffix and slaves a suffix or 02, 03, etc. To select the room # suffix, while still in configuration mode, press the **HEAT** HEAT key until r5 appears. Then press the up and down arrows to select the room # suffix. Example: For the unit serving the main living area in room 224, press the **HEAT** HEAT key until r5 appears, then press the up and down arrow keys to select 01 (r5= 01 appears in the display).

   For the bedroom unit closest to the main room in room 224, press the up and down arrow keys to select 02 02 (r5=02 appears in the display) Press the OFF key to exit configuration mode.

Binding of RF Devices

IMPORTANT NOTE: If wireless platform DP01*, DP01E or DL01E are being utilized, then room numbers MUST BE CONFIGURED in the control board prior to binding wireless devices.

DO NOT ATTEMPT TO BIND MORE THAN ONE ROOM AT A TIME AT THE SAME PROPERTY!!!
RF TRANSMITS THROUGH WALLS.

The wireless devices (DS01E and or DD01E must be bound to the PTAC DT01E control for proper in-room communication. Ensure the unit is powered but in the OFF position.

SYSTEM OPERATION

NOTE: Both the DS01E and the DD01E must be bound to the PTAC unit during the same "learn" operation.
If you need to rebind one device - then you must rebind both devices during the same learn mode event.

All must be bound at one time.

1. Press and hold OFF button on the PTAC until L appears.
2. Press and then immediately release the white tactile button on the back of the DS01* thermostat. L1 should now be displayed on the PTAC LED display. If L1 does not show on the display in 1-2 seconds, then press and release the white button a second time. Skip this step if there is no thermostat.
3. Press and then immediately release the white tactile button on the back of the DD01* motion sensor. L5 or L2 should now be displayed on the PTAC LED display.
   If L1 or L2 does not show on the display in 1-2 seconds, then press and release the white button a second time. **NOTE**: If both a DD01* and a DS01* are being bound, then the display will show L5.

Skip if there is no motion sensor.

4. Press "OFF" on the PTAC touchpad to exit the binding sequence.
5. Slide top of the thermostat down onto the wall plate and then snap into place.
6. Provided optional security screws may be used in lower corners of the thermostat.

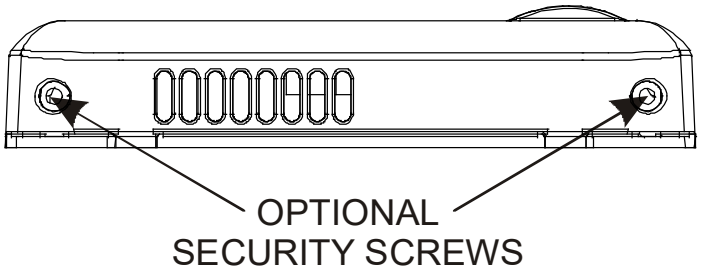

7. Snap motion sensor onto motion sensor mounting plate.
8. Provided optional security screws may be installed on right and left side of the sensor.
9. If you wish to change from the factory default settings, configure the device or devices that were bound. See the next section for configuration choices.

NOTE: If a wireless device is replaced or added, all devices (including those previously bound) will need to be bound/re-bound to the unit. See directions above.

Entering Room Number (Skip if not using DP01* Front Desk Platform)

1. The PTAC control can be set for a 4-digit room number. To select the first two digits (floor), press the **HEAT** HEAT key until C4 appears, then press the up and down ⊕ ⊖ arrows to select the first two digits.
2. To select the last two digits of the room number, press the **HEAT** HEAT key until C5 appears, then press the up and down ⊕ ⊖ arrows to select the last 2 digits of the room number.

   For example for Room **"201"**, press the **HEAT** HEAT key until C4 appears, then press the up and down ⊕ ⊖ arrows to select "02": C4 = 02 .

   Next to select the last two digits of the room number,

press the **HEAT** HEAT key until CS appears, then press the up and down arrows to select “01”: CS = 01 .3. If a room contains more than one unit (a suite), a suffix must also be entered to identify which unit is in the main room and which unit(s) are in bedroom(s). Master unit ALWAYS MUST have a 01 suffix and slaves a suffix or 02, 03, etc. To select the room # suffix, while still in configuration mode, press the **HEAT** HEAT key until rS appears. Then press the up and down arrows to select the room # suffix. Example: For the unit serving the main living area in room 224, press the HEAT HEAT key until rS appears, then press the up and down arrow keys to select 00 (rS = 00 appears in the display). Since 00 is the factory default setting for configuration code rS, it may not be necessary to configure the suffix for the main room.

For the bedroom unit closest to the main room in room 224, press the up and down arrow keys to select 01 01 (rS=01 appears in the display) Press the OFF key to exit configuration mode.

4. If a property identifies rooms by an alpha character (such as WINGS), a prefix must also be entered to identify room numbers (example: A-115). To select the room # prefix, while still in configuration mode, press the HEAT HEAT key until rY appears. Then press the up and down arrows to select the room # prefix. Contact the manufacturer to have the prefix show as the correct letter on the platform.

Setback Temps - DD01E / DD01F

The DD01* and the DigiSmart™ control can be programmed for 3 different times to activate temperature setbacks. The current factory default temperature setbacks in v2.5 * software release are: 2º from set point in 30 minutes, 3º in one (1) hour, and 6º in three (3) hours. For each time, you can select a setback temperature. The amount of setback is the amount of degrees the control will operate from guest’s setting in degrees F. If a change to the factory default temperature settings is desired, use the following instructions

Note: When first entering the configuration mode, if you see “ - - ” then you have version 2.5 or higher. You can verify the software version by starting with the unit in the off position, and while holding down the “+” and “-” buttons , double click the COOL button and then release and push the FAN button within one second. The unit display will scroll through all of the thermister temperatures and the last item displayed will be CS (current software) and you will see 25 for v2.5.

*Other software versions may have different factory seback defaults. Contact your PTAC representative to determine factory default settings.

4. To select first unoccupied set back temperature, press the **HEAT** HEAT key until d7 feature code comes up. To scroll to a previously viewed feature codes, press the **COOL** COOL key.
   Once you have scrolled to the d7 feature, press either the up or down arrow to scroll to the desired first unoccupied setback temperature. Cooling example: 720 (guest set point) + 20 (Setback temperature) = 740 (operational set point).
5. Press **HEAT** HEAT key to scroll to d8 first unoccupied setback time. The first unoccupied setback time is the time between when the control determines that the room is not occupied and when the control sets the operating set point temperature back. The increments are in hours (.1 = 6 mins., .5 = 30 mins., 1 = 1 hour, etc.). Press either the up or down arrow to the desired

first unoccupied setback time.

6. To select second unoccupied setback temperature, press the **HEAT** key until d9 comes up. Press either the up or down arrow to the desired second unoccupied setback temperature.

   Cooling example: 720 (guest set point) + 40 (Setback temperature) = 760 (operational set point).

7. Press **HEAT** key to scroll to dA second unoccupied setback time. Press either the up or down arrow to the desired second unoccupied setback time.

   Example: Operating set point would be 760 instead of 72, one hour (1.0 hour) after guest leaves room.

8. Press **HEAT** key to scroll to db third unoccupied setback temperature. Press either the up or down arrow to the desired third unoccupied setback temperature.

9. Press **HEAT** key to scroll to dC third unoccupied setback time. Press either the up or down arrow to the desired third unoccupied setback time.

10. **To exit configuration mode:**

    Press the **OFF** key. **NOTE**: Configuration feature mode will also automatically exit **if no keys are pressed** for a period of two **(2) minutes**.

    The changes made in configuration mode are now in effect.

NOTE: Additional codes are present and may be accessed within this menu. Contact the manufacturer for additional information.

Configuration Settings

7 Button Touch Pad with Display

The control can be configured to operate a wide range of options. The options listed below with the * are the factory default settings. If these are acceptable, then the unit does not require any additional configuration and is fully operable. To configure the unit, first select the configuration feature code setting and then an option code to change from the factory default setting.

To enter configuration feature mode:

1. Press and hold the up and down arrow keys at the same time and press the OFF key twice within a two (2) second time frame. The display will indicate - -., and then release the key and press the HEAT key one time. The display will then alternate between C1 and 0.

   To select a different configuration feature code, press the HEAT key until the desired configuration comes up. To scroll to a previously viewed configuration codes press the COOL key.Once you have scrolled to the correct feature, then to select the option code for your desired configuration, press either the up or down key to scroll through the options of the selected feature code.

To exit configuration mode:

1. Press the OFF key. Configuration feature mode will also exit if no keys are pressed for a period of two (2) minutes.

Refer to the Configuration Chart on page 25.

CONFIGURATION SETTINGS

Configuration Code	Configuration Feature	Option Code	Option
C1	Interface	0 *	Chassis Membrane *
		L5	Wired Thermostat
		rE	Wireless Stat & 7-Button
		L0	Locked Membrane
C2	ID Fan Operation	Au	*do not use*
		On	*do not use*
		bP	Button present
		bA*	Revert to Cyclic
		A	Always run fan (even if Off)
		C	*do not use*
		bC	Revert to Continuous
C3	Model Prefix	C	PTC (Standard Cooler)
		H*	PTH (Standard Heat Pump)
		0	Service No Operation "Eo"
		dC	DRY (Dehumidification Cooler)
		dH	*do not use*
		uC	*do not use*
		uH	*do not use*
		AC	PMC (Cooler w/ Make-up Air)
		AH	PMH (Heat Pump w/ Make-up Air)
		EC	HEC (High Efficiency Cooler)
		EH	HEH (High Efficiency Heat Pump)
		3C	32C (R-32 Cooler)
		3H	32H (R-32 Heat Pump)
C4	Room I.D. Digit 1 & 2	00* - 99	00* - 99
C5	Room I.D. Digit 3 & 4	00* - 99	00* - 99
C6	Wired Occupancy	0*	Off*
		1	On
		18	18 Hour Automatic Entry
C8	Temp. Limiting Cool	60* - 80	60* - 80
C9	Temp. Limiting Heat	68 - 90, 80*	68 - 90, 80*
C0	T-stat B/O Term.	8*	B*
		0	O
c3	Un-rent Cooling Temp.	45 - 95, 79*	45 - 95, 79*
c4	Un-rent Heating Temp.	45 - 95, 63*	45 - 95, 63*
CA	Wireless Twin Unit	0*	Not Twinned*
		5	Twinned
Cd	English / Metric Temp	F*	Fahrenheit Scale*
		C	Celsius Scale
CE	Freeze Protection	L*	On, Low Fan*
		H	On, High Fan
		0	Off
d6	Sensorless Un-Occ. Time	1 - 32, 18*	1 - 32, 18*
d7	1st Un-Occ. Set Back Temp.	1 - 16, 2*	1 - 16, 2*
d8	1st Un-Occ. Set Back Time	.1, .5*, 1 - 24	.1 ,.5 ,1 - 24, .5*
d9	2nd Un-Occ. Set Back Temp.	1 - 16, 3*	1 - 16, 3*
dA	2nd Un-Occ. Set Back Time	.5, 1* - 24	(d8) - 24, 1*
db	3rd Un-Occ. Set Back Temp.	1 - 16, 6*	1 - 16, 6*
dC	3rd Un-Occ. Set Back Time	1 - 24, 3*	(dA) - 24, 3*
dd	Cooling Capacity	5 - 24	5,000 - 24,000 BTU
dF	Platform Group Code	00* - 99	00* - 99
dH	Electric Heater Size	00*, 15, 20, 25, 35, 50	00*, 15, 20, 25, 35, & 50
dJ	Operating Voltage	2, 3*, 4, 5	2, 3*, 4, 5
r4	Room Prefix	00* - 99	00* - 99
r5	Room Suffix	00* - 99	00* - 99
u3	Heat Protection	0*	Dis-enabled*
		78 - 99	78 - 99

*indicates factory default. See manufacturer for additional configuration options.

SYSTEM OPERATION

Configuration Code	Configuration Feature	Option Code	Option
P0	Smart Vent Operation	0	Off
		1*	On only when ID fan runs
		2	On when ID fan runs & room occupied
		3	Runs continuously
		4	On when room is occupied
		E	Economizer
		EP	Economizer with compressor assist
P2	Vent Dehumid Make-up Air Kit Operation	0	Off
		1*	May be on anytime
		2	Allowed on except in Off mode
		3	Allowed on when indoor fan runs
		4	Allowed on if room is occupied
		5	Allowed on if room is not occupied
		6	Allowed on when indoor humidity is high
u8	Input Pins UN1 & COM	0*	Door Switch
		1	Motion Sensor
		2	Front Desk
		3	Wired Un-rented Set Back
		4	Emergency Hydronic
		5	Load Shedding
		6	Alarm Sensor
u9	Input Pins UN2 & COM	0*	Door Switch
		1	Motion Sensor
		2	Front Desk
		3	Wired Un-rented Set Back
		4	Emergency Hydronic
		5	Load Shedding
		6	Alarm Sensor
ub	Indoor Humidity Activation	0	Not used
		15-80, 25*	% RH above which kit may run
un	Vent Dehumid Outdoor Humidity Level	0	Not used
		15-60, 25*	% RH above which kit may run
uu	Vent Dehumidification Kit Fan Force	0	No affect on indoor fan
		1*	Indoor fan forced to run with Kit
uL	Config. Security Code	00* - 99	00* - 99

*indicates factory default. See manufacturer for additional configuration options.

SCHEDULED MAINTENANCE

NOTE: The compressor does not require maintenance. It is hermetically sealed, permanently lubricated.

Monthly Maintenance and Cleaning

Intake Air Filter

To properly maintain the operational performance of your PTAC unit, it is extremely important that the inlet air filter be cleaned once per month or more often if operated in dusty or dirty locations or conditions. The intake air filter is constructed of durable polypropylene. The “air intake” air filter can be easily inserted into the cabinet front using the cabinet filter guides. The intake air grille pulls upward for easy access to the filter. Before cleaning the intake filter, turn the unit off by setting the mode switch to the OFF position. Filter should be cleaned as required.

The following procedure is used to remove the intake filter:

1. Grasp each filter by its molded handle, located on the front edge of the front, below the discharge grill.
2. Pull the filter straight up and remove.
3. Clean filter with vacuum or with running water. Reverse this procedure to reinstall the filters.

NOTE: Available accessory filter kits are FK10B (air intake filter - 10 per pack) and CFK10B (charcoal filter - 10 per pack). The charcoal filters will greatly improve the quality of the air by absorbing odors from tobacco smoke, mold, mildew, etc. Both filters are permanent and cleanable. Contact your sales person for details.

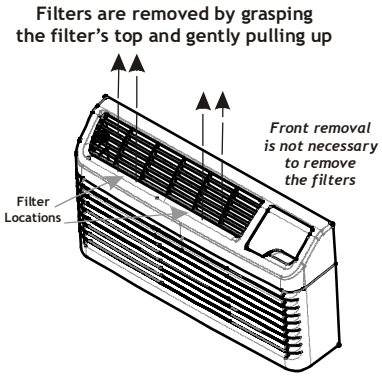

Intake Filter Removal

Vent Screen

Before cleaning the vent screen, disconnect power to the unit by unplugging the power cord at the wall outlet or sub-base, or disconnect power at the fuse box or circuit breaker. If unit is operated with vent door closed, the vent screen does not need to be cleaned.

1. Remove the cabinet front as described in Front Removal.
2. Remove the six screws securing the chassis to the wall sleeve.
3. Slide the chassis out of the wall sleeve far enough so that the vent screen is accessible.
4. Clean and replace the vent screen, slide the chassis back into the wall sleeve, secure it in place with six screws and reinstall the front cabinet.

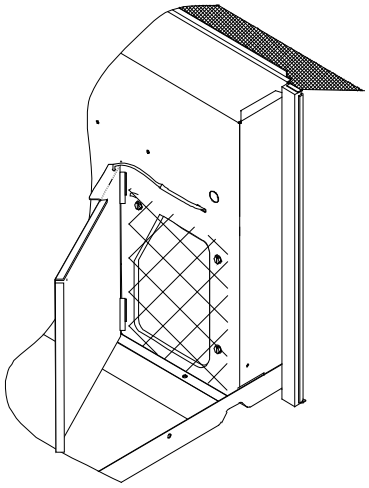

Vent - (Left Side Unit)

Cabinet Front

The cabinet front and discharge air grille can be cleaned with a water dampened cloth . Under no circumstances should hydrocarbon-based cleaners (e.g. acetone, benzene, naphtha gasoline, etc.) or ammonia based cleaners be used to clean the front or air grilles. Use care when cleaning the control area.

Yearly Maintenance and Cleaning

NOTE: Use a mild biodegradable detergent such as Simple Green™ when cleaning the unit.

Special care must be taken to protect the unit’s control board and other electrical components from getting any water on them while cleaning. The use of harsh or caustic cleaning agents or materials such as bleach or coil cleaners that are not designed for PTAC products will cause damage or deterioration of the aluminum fin or coil material and is not recommended. Care must be taken not to bend the aluminum fin stock.

Routine Scheduled Maintenance

To achieve continuing top performance and high efficiency, establish a “once a year” cleaning/inspection schedule for the unit. Take the unit out of the sleeve and thoroughly clean and rinse. Be sure to include in the yearly cleaning the evaporator coils, and condenser coils, basepan, and drain passages. Scheduled maintenance can be accomplished by either local maintenance staff or by an authorized servicer. They must follow the instructions described in this manual.

Adverse Operating Conditions Maintenance

Units operating in dusty or corrosive locations; i.e. dusty construction site or sea coast, must be cleaned more often. A minimum of four (4) times a year will maintain proper operational conditions and protect unit components.

Wall Sleeve

Clean the wall sleeve while cleaning the unit. The caulking around the sleeve should be checked to make sure that any potential air and water openings around the sleeve are properly sealed. The wall sleeve’s level should also be

SCHEDULED MAINTENANCE

rechecked. Proper leveling for most installations are a ¼ bubble tilt to the outside and level from right to left. Contact your sales person for detailed maintenance or cleaning instructions.

Basepan and Condenser Coil

Before cleaning the basepan and condenser coil, turn OFF unit mode switch and disconnect power to the unit. To disconnect power, either unplug the power cord at the wall outlet or subbase, or disconnect power at the fuse box or circuit breaker.

1. Create a water-tight seal by tightly covering the entire control panel area and fan motor with plastic. Creating this seal prevents water from entering the control area or the fan motor and damaging the unit.
2. Spray condenser coil and basepan down with water. Next spray a mild biodegradable detergent such as Simple Green™ onto the condenser coil and basepan. Let set for five (5) minutes.
3. Rinse condenser coil and basepan with water again. NOTE: Ensure water pressure is no higher than that of an ordinary garden hose and the water temperature no higher than 120°F.
4. Tilt the non-compressor side of the unit up no higher than 45 degrees and allow water to drain out the other side of the unit.
5. Remove excess water left in the basepan by wiping the basepan with a dry cloth.
6. Remove the water-tight seal from the motor and control panel area.
7. Reinstall unit back into wall sleeve.
8. Allow unit to dry for 24 hours before reapplying power. When power is reapplied test unit for proper operation.
9. Place a non-acidic algaecide in the basepan to inhibit bacteria growth. Ensure the algaecide is compatible with wet coil operation and is not corrosive to the coil.

Clearance Check

Clearances around the unit should also be checked to make sure that the intake air and discharge air paths have not become blocked or restricted. A minimum of eight inches clearance is needed from unit to furniture, beds, or other objects for proper operation. Restricted discharge or intake air will reduce the units operational performance. In severe airflow restrictions damage can occur to unit components such as the compressor, electric heater or fan motor.
Normal Operating Sounds and Conditions

Water Trickling Sounds

Water is picked up and distributed over the coil. This improves the efficiency and helps with water removal.

Water Dripping

Water will collect in the base pan during high humidity days. This can cause overflow and drip from the outside of the unit.

Air Sounds

The fan cycle switch sets the operational mode of the fan in the on position. When the unit is in conditioning mode for example high or low heat or cool, the fan will run continuously. In the AUTO position, the fan will cycle on and off with the compressor or electric heater.

Starting Delay

You may notice a few minutes delay in the starting if you try to start the unit too soon after turning the unit off. This is due to a built in delay to protect the compressor.

REFRIGERANT SYSTEM

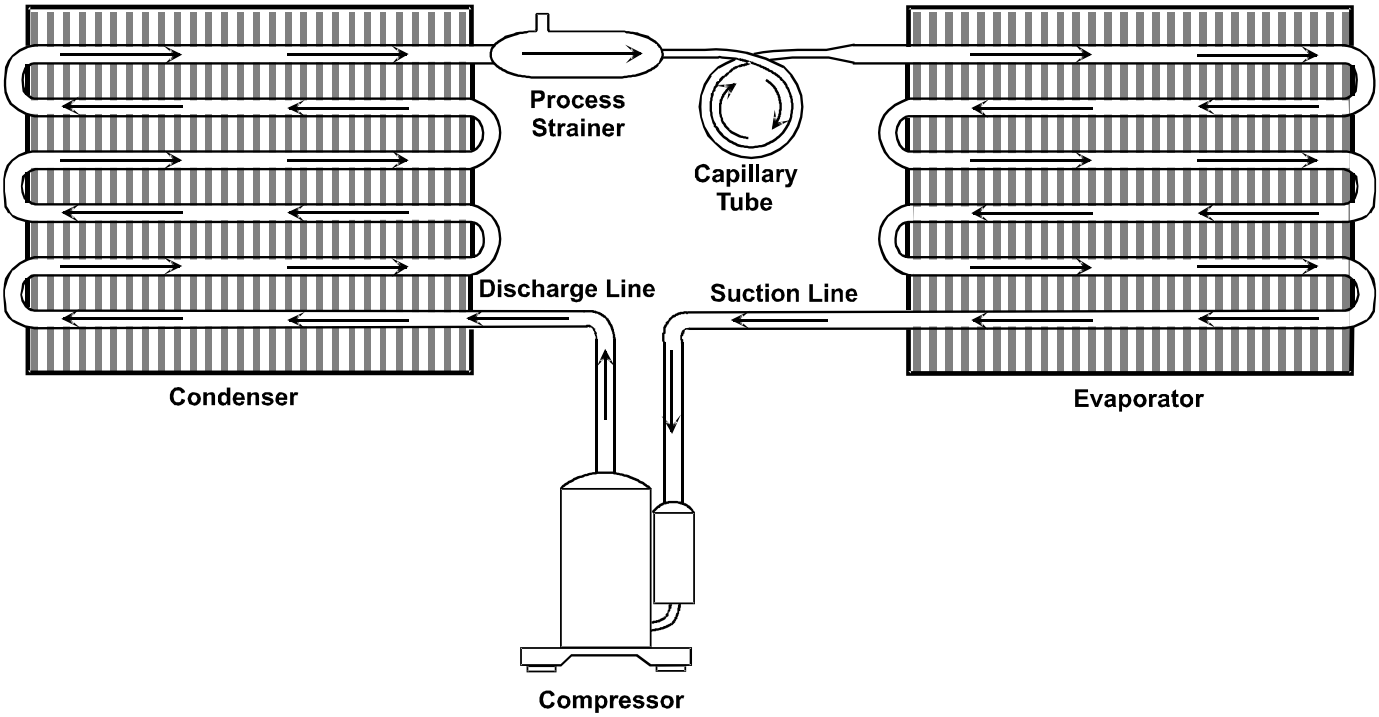

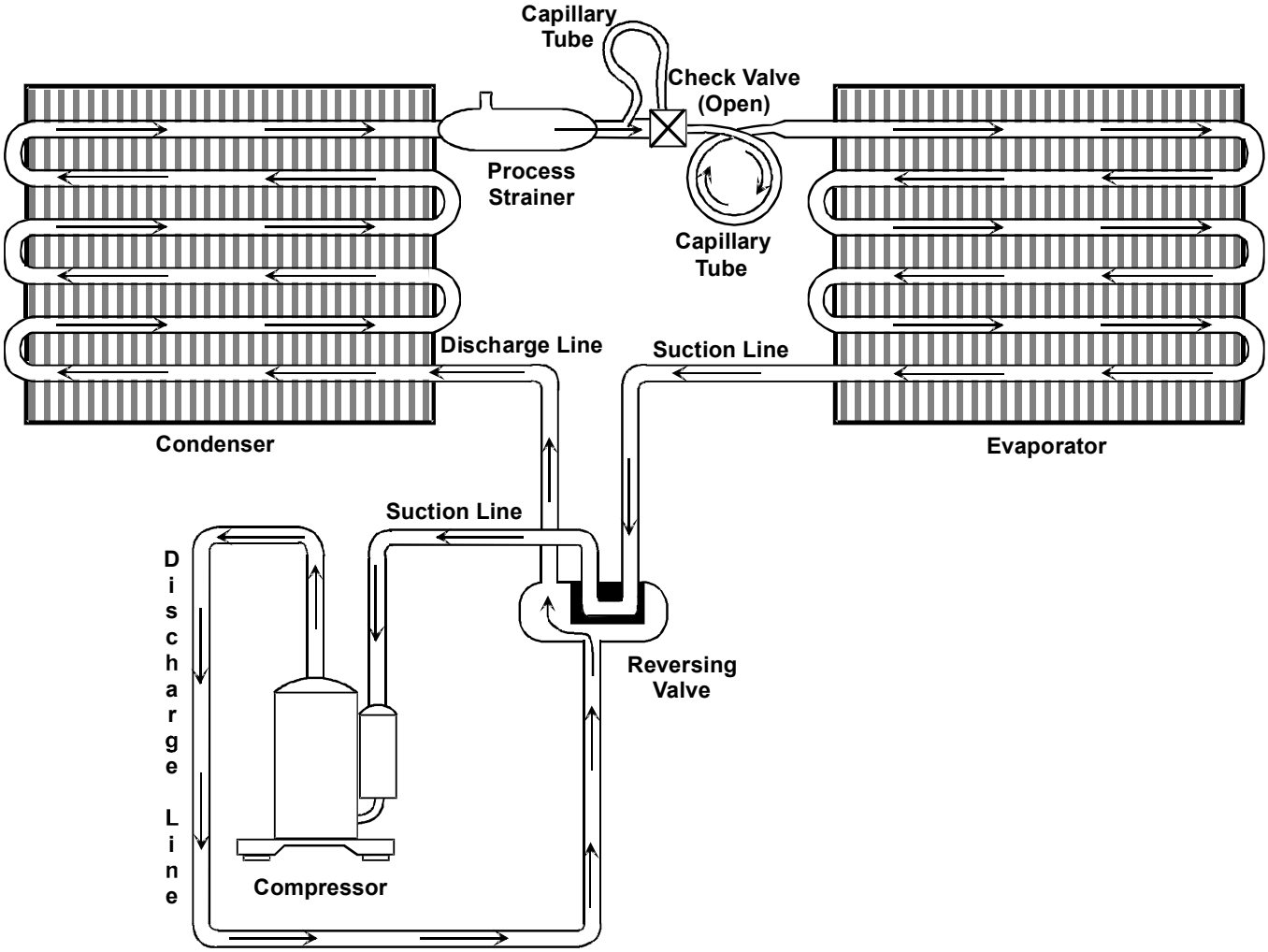

SERVICING

Refrigeration System Service

IMPORTANT NOTE: Effective July 1,1992 before opening any refrigerant system it is the responsibility of the service technician to capture the refrigerant for safe disposal.
Refer to the cooling and heater performance charts in this section for capacity test procedure.
A step-by-step procedure for determining source of trouble, suggested method and normal values are provided in the Diagnosis Charts.
Service operations requiring opening of the hermetically sealed refrigeration system should not be performed in the home. The unit must be taken to a well equipped shop where special equipment for evacuating, dehydrating, charging and testing is available. The following equipment is necessary.
Equipment to use dry nitrogen of no more than .0012 grains of moisture. Vacuum pump capable of evacuating to a minimum of 50 microns.
Vacuum Pump - Kenney or equivalent. Micron gauge to check vacuum. Refrigerant charging cylinder accurate to within 1/4 oz. Electronic leak detector - General Electric or equivalent. Electrical equipment to test: compressors, capacitors, voltage relays and overload protectors Electrical test board or portable equipment, including: volt meter, ammeter, and watt meter. Silver soldering and brazing equipment: Pinch off tools 1/4” to 5/8” Thermocouple tester.

Dehydrating And Evacuating Refrigeration System

A rather popular misconception exists that since air conditioners normally operate with a refrigerant temperature above 32°F., moisture in the system is harmless. Nothing could be further from the truth. Oxygen from moisture plus normal compressor and motor heat reacts chemically with the refrigerant and oil to form corrosive hydrochloric and hydrofluoric acids. These acids contribute to the breakdown of motor winding insulation and the corrosion of compressor working parts and cause unnecessary compressor failure. Sludge, which is a residue of the chemical action, coats all compressor parts, the inside of refrigerant tubing, and may even restrict refrigerant flow through the capillary tube(s).

Leak Testing

Refrigerant leaks are best detected with a halide or electronic leak detector.
NOTE: Leak detectors must be compatible with R-410A refrigerant.
The importance of careful leak testing cannot be overemphasized. Undetected leaks invariably lead to repeated calls and eventually result in system contamination, restrictions and burned out compressors.
For a system that contains a refrigerant charge and is suspected of having a leak, stop the operation, check all tubing and fittings. Soap suds may also be used.
NOTE: The flame of the halide detector will glow green in the presence of R-410A refrigerant.
If a leak is detected, do not attempt to apply more brazing material to the joint. Recover the charge, unbraze the joint, clean and rebraze.
For a system that has been newly repaired and does not contain a charge, connect a cylinder of refrigerant, through a gauge manifold, to the process tube of the compressor and liquid line strainer. Open the valve on the cylinder and manifold and allow the pressure to build up within the system. Check for and handle leaks as described above.
After the test has been completed, recover the test charge, evacuate the system, and recharge with clean refrigerant.

Brazing

Satisfactory results require cleanliness, experience and the use of proper material and equipment.
The connections to be brazed must be properly sized, free of rough edges and clean.
The generally accepted materials are:
SIL-FOS (Alloy of 15% silver, 80% copper, 5% phosphorus) is used without flux on copper to copper. DO NOT USE FOR A COPPER TO STEEL CONNECTION. Recommended heat is approximately 1400°F.
SILVER SOLDER (Alloy of 30% silver, 38% copper, 32% zinc.) is used with fluoride base flux on copper to steel, brass to copper, steel to steel, brass to steel. Recommended heat is approximately 1200°F.

Evacuation

This is the most important part of the entire service procedure. The life and efficiency of the equipment is dependent upon the thoroughness exercised by the serviceman when evacuating air (non-condensables) and moisture from the system.
Air in the system causes high condensing temperature and pressure, resulting in increased power input and reduced performance.
Moisture chemically reacts with the refrigerant and oil to form corrosive hydrofluoric and hydrochloric acids. These attack motor windings and parts, causing breakdown.
The equipment required to thoroughly evacuate the system is a high vacuum pump, capable of producing a vacuum equivalent to 50 microns, and a thermocouple vacuum gauge to give a true reading of the vacuum in the system.
NOTE: Never use the system compressor as a vacuum pump or run when under a high vacuum. Motor damage could occur.

1. Connect the vacuum pump, vacuum tight manifold set with high vacuum hoses, thermocouple vacuum gauge and charging cylinder.
2. Connect the low side line to the process tube of the compressor.
3. Connect the high side line to the process tube of liquid line strainer.

NOTE: If either process tube is not long enough to receive the compression or flare fitting and still leave room for a pinch-off, swag the tube and braze in an extra length of tubing.

4. Start the vacuum pump and open shut off valve to the high vacuum gauge manifold only. After the compound gauge (low side) has dropped to approximately 29 inches of vacuum open the valve to the vacuum thermocou-

ple gauge. See that the vacuum pump will bank-off to a minimum of 50 microns. A high vacuum pump can only produce a good vacuum if its oil is not contaminated.

5. If the vacuum pump is working properly, close the valve to the vacuum thermocouple gauge and open the high and low side valves or the high vacuum manifold set. With the valve on the charging cylinder closed, open the manifold valve to the cylinder.
6. Evacuate the system to at least 29 inches gauge before opening valve to thermocouple vacuum gauge.
7. Continue to evacuate to a minimum of 250 microns. Close valve pump and watch rate of rise. If vacuum does not rise above 1500 microns in three minutes, system can be considered properly evacuated.
8. If thermocouple vacuum gauge continues to rise and levels off at about 5000 microns, moisture and non-condensables are still present. If gauge continues to rise a leak is present. Repair and re-evacuate.
9. Close valve to thermocouple vacuum gauge and vacuum pump. Shut off pump and prepare to charge.

Charging

Charge the system with the exact amount of refrigerant. Refer to the unit nameplate for the correct refrigerant charge. An inaccurately charged system will cause future problems.

1. When using an ambient compensated calibrated charging cylinder, allow liquid refrigerant only to enter the high side.
2. After the system will take all it will take, close the valve on the high side of the manifold.
3. Start the system and charge the balance of the refrigerant though the low side. Do not charge in a liquid form.
4. Close the low side valve on the manifold and pinch-off both process tubes. Remove the manifold set, crimp shut the open ends of the process tubes and braze.
5. Recheck for refrigerant leaks.

NOTE: Do not use a refrigerant other than that shown on the serial number identification plate.

All precautionary measures recommended by the refrigerant manufacturers and suppliers should be observed.

Line Piercing Valves

Line piercing valves may be used for diagnosis but are not suitable for evacuating or charging due to the minute holes pierced in the tubing.

Line piercing valves must not be left on the refrigerant system. The connection between the valve and the refrigerant tubing is not hermetically sealed and will eventually leak.

Open Lines

During any processing of the refrigeration system the lines should never be left open to atmosphere since water vapor will enter and add to the problem of proper evacuation.

Operating Test

The final step in a successful repair is an accurate operating test. Follow the Cooling and Heating Performance tests provided to make sure the product is again performing to design standards.

Efficient operation is dependent on a balanced system. One of the most common reasons for inefficiency is the users failure to adequately clean the condenser thereby creating reduced air movement.

Cooling Performance Test Thermometers

The following precautions are necessary in observing the thermometer readings in the cooling performance test.

1. Use two accurately calibrated refrigeration type thermometers or a thermocouple potentiometer.
2. Thermometers are affected by body heat or changes in air flow. Therefore, the thermometers must be secured in proper locations with masking tape, wire or other applicable retainers.
3. Readings should be observed without touching or moving the thermometers.

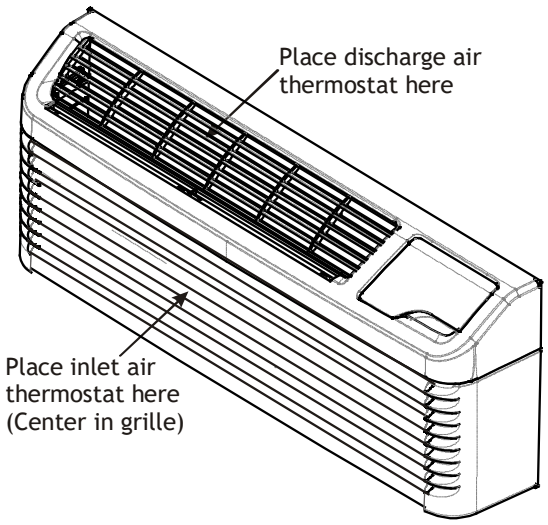

Sling Psychrometer

The sling psychrometer is used to obtain the wet bulb temperature in determining the percent relative humidity.

To obtain the wet bulb operate the sling psychrometer as follows:

Saturate the wick (only once during procedure of obtaining wet bulb readings) with clean water slightly below room temperature. Psychrometer reading should be acquired five to six feet in front of the unit and approximately four feet off the floor.

NOTE: Direct discharge airflow away from the sling psychrometer.

The cooling performance test should not be employed when outside temperatures are 20° below that of the room. Best results are obtained when the test is conducted under peak load conditions.

The air conditioner must operate at least 20 minutes on the High Cool position before testing.

Cooling Test

The following temperature must be recorded for the cooling performance test:

A. Dry bulb temperature of return air at conditioner. Locate thermometer as illustrated.

B. Dry bulb temperature of air leaving conditioner. Thermometer has to be located as illustrated.
C. The dry bulb thermometer temperature on the sling psychrometer should be plus or minus 1°F within reading obtained on thermometer in the return air. Check wet bulb temperature on sling psychrometer and record same.
D. After the wet bulb temperature, dry bulb temperature, and return air temperature have been recorded, proceed to calculate the temperature difference as follows.
E. Subtract temperature obtained in Step B from temperature obtained in Step A. The remainder temperature is used to calculate from the Cooling Range Chart.

EXAMPLE: Assume a PTH15 unit is under test and the temperature readings indicated below were obtained.

1. Return air D.B. temperature: 80°F, Step A.
2. Discharge air D.B. temperature: 69°F, Step B.
3. Return air, wet and dry bulb temperature as recorded in Step C: Dry Bulb 80°F, Wet Bulb 75°F.
4. In left hand column of Cooling Capacity Charge headed Dry Bulb, find the 80° value.
5. In column headed Wet Bulb find the 75°F value and find the value 8 -13 in the cooling range column under the Model “PTH153 PTH154”.
   This data shows that the temperature of the air passing through the cooling coil is reduced at least 8°F but not more than 13°F. This example unit is operating normally for the existing conditions.

For the example unit under test, the temperature difference was 11°F (80°F, return air, minimum 69°F discharge air). Since the value is within the listed cooling range 8 - 13, this unit is considered to be operating normally.

For Total Power Input Test (wattage) the following additional readings must be recorded after the unit under test is interconnected with a wattmeter.

- Outdoor dry bulb temperature. Avoid direct exposure of thermometer to sunlight or to hot condenser discharge air.
- Total watts input, measured by wattmeter or calculate by multiplying applied voltage by unit amps.

Calculating Procedure

1. Locate the outdoor temperature obtained in first column of Total Power Consumption Cooling Chart.
2. Locate in second column the return air wet bulb temperature obtained in Step C.
3. The total watts input should come between minimum and maximum values indicated for each model.

EXAMPLE: Assume that a PTH15 is again under test. Proceed as follows and observe test readings as simultaneously as possible.

1. Outdoor dry bulb temperature reading - 95°F.
2. Check watts input - 1510.
3. Wet bulb temperature as described in Step C - 75°F.

In column headed Outdoor Dry Bulb Temperature of the Power Consumption Chart find the 95°F value. Read to the right from the 95°F value and find the room wet bulb temperature (75°F).

Read to the right front the 75°F W.B. value in the PTH15 column and note the minimum and maximum wattage of 1460 - 1575.

Since the wattage reading (1510) obtained in the test is within the prescribed range, the total power input in watts is considered to be normal.

Electric Heat Test

For the electric heat test, the following readings must be recorded after the unit is interconnected with a wattmeter or by recording the total amp draw to the unit.

NOTE: Cabinet front must be in place during this test.

- Record supply voltage to unit.
- Operate unit in highest heat setting.
- Record wattage recorded on wattmeter or total amp draw to unit.
- Refer to heating watts/amps chart. (Whichever is applicable for voltage rating on the unit being tested.)
- The total watts or amps recorded should fall within the minimum and maximum watts/amps listed on these charts.

EXAMPLE: Assume that a PTH15 230/208V with 3.5 kW electric heater is under test.

1. Supply voltage as recorded - 208volts.
2. Watts recorded -2750W or Amps recorded - 13.5 Amps.
3. Locate the readings listed on the following pages. You will note that these readings fall within the voltage, watts and amp draw minimum and maximum ranges listed and therefore the unit heating performance would be considered normal.

Heating Power Consumption Test (Heat Pump Mode Only)

For the total power consumption test, the following readings must be recorded after the unit is interconnected with a wattmeter.

- Outside coil inlet air dry bulb temperature.
- Inside coil inlet air dry bulb temperature.
- Total watts input measured by wattmeter.

Calculating Procedure

1. Locate temperature obtained in Step A in first column of Heating Wattage Chart.
2. Locate in second column the inside coil inlet D.B. temperature.
3. The total watts input should come between minimum and maximum values indicated for each model.

EXAMPLE: Assume that a PTH15 is under test.

Proceed as follows and observe test readings as simultaneously as possible.

1. Outside coil inlet D.B. temperature readings as described in Step A: 45°F.
2. Check watts input: 1370 W.
3. Inside coil inlet D.B. temperature reading as described in Step B: 75°F.

Read to the right from the 75°F inside coil inlet D.B. value in the column and note the minimum and maximum wattage of 1335 - 1470.

Since the wattage reading (1370) obtained in the test is within the prescribed range, the total power input in watts is considered to be normal.

See the charts on the following pages.

SERVICING

COOLING CHANGE OF TEMPERATURE - AIR CONDITIONERS									
Model		PMC073 PTC073	PMC074 PTC074	PMC093 PTC093	PMC094 PTC094	PMC123 PTC123	PMC124 PTC124	PMC153 PTC153	PMC154 PTC154
Temperature		Temperature Across Indoor Coil (ΔT)	Temperature Across Indoor Coil (ΔT)	Temperature Across Indoor Coil (ΔT)	Temperature Across Indoor Coil (ΔT)	Temperature Across Indoor Coil (ΔT)	Temperature Across Indoor Coil (ΔT)	Temperature Across Indoor Coil (ΔT)	Temperature Across Indoor Coil (ΔT)
Outside Coil Dry Bulb (ºF)	Room Wet Bulb (ºF)	Min	Max	Min	Max	Min	Max	Min	Max
90	85	1	3	2	6	1	5	1	4
	80	6	11	10	15	9	13	8	13
	78	15	19	18	23	17	22	16	21
	70	23	28	27	31	25	30	24	29
85	80	3	8	7	11	5	10	5	9
	75	11	16	14	19	13	18	12	17
	70	18	23	22	26	20	25	20	24
	65	26	31	29	34	28	33	27	32
80	75	7	12	10	15	9	13	8	13
	70	14	18	17	21	15	20	15	19
	65	20	25	23	28	22	26	21	26
	60	27	31	30	34	28	33	28	32
75	70	9	14	12	17	10	15	10	15
	65	14	19	17	22	15	20	15	20
	60	19	24	22	27	20	25	20	25
	55	24	29	27	32	25	30	25	30
70	65	9	13	11	15	9	13	9	14
	60	13	17	15	19	13	17	13	18
	55	17	21	19	23	17	21	17	22

COOLING CHANGE OF TEMPERATURE - HEAT PUMPS									
Model		HEH073 PMH073 PTH073	HEH074 PMH074 PTH074	HEH093 PMH093 PTH093	HEH094 PMH094 PTH094	HEH123 PMH123 PTH123	HEH124 PMH124 PTH124	HEH153 PMH153 PTH153	HEH154 PMH154 PTH154
Temperature		Temperature Across Indoor Coil (ΔT)	Temperature Across Indoor Coil (ΔT)	Temperature Across Indoor Coil (ΔT)	Temperature Across Indoor Coil (ΔT)	Temperature Across Indoor Coil (ΔT)	Temperature Across Indoor Coil (ΔT)	Temperature Across Indoor Coil (ΔT)	Temperature Across Indoor Coil (ΔT)
Outside Coil Dry Bulb (ºF)	Room Wet Bulb (ºF)	Min	Max	Min	Max	Min	Max	Min	Max
90	85	1	3	2	6	1	5	1	4
	80	6	11	10	15	9	13	8	13
	78	15	19	18	23	17	22	16	21
	70	23	28	27	31	25	30	24	29
85	80	3	8	7	11	5	10	5	9
	75	11	16	14	19	13	18	12	17
	70	18	23	22	26	20	25	20	24
	65	26	31	29	34	28	33	27	32
80	75	7	12	10	15	9	13	8	13
	70	14	18	17	21	15	20	15	19
	65	20	25	23	28	22	26	21	26
	60	27	31	30	34	28	33	28	32
75	70	9	14	12	17	10	15	10	15
	65	14	19	17	22	15	20	15	20
	60	19	24	22	27	20	25	20	25
	55	24	29	27	32	25	30	25	30
70	65	9	13	11	15	9	13	9	14
	60	13	17	15	19	13	17	13	18
	55	17	21	19	23	17	21	17	22

SERVICING

Digital Board Diagnostics

If a failure is detected on the digital board, there will be a green light constantly lit up. This light is located under the OFF touch pad button. The board will need to enter in the Diagnostic Mode to determine failure code and procedures to follow to correct problem.

Diagnostic Maintenance & Status Report

The Diagnostic Maintenance & Status Report Mode provides detailed information on PTAC control operation and operational status including present modes, failures, airflow restriction warnings, operating temperatures, and past failures. The lower right hand dot on the center display flashes in this mode. In some cases the green LED located in the lower left hand corner of the touchpad below the OFF key will also be lit. This Green LED “Status Light“ only illuminates if there is an status code that has been activated and should be reviewed. In most cases, this light indicates that the indoor room filter is dirty should be cleaned or replaced. NOTE: Dirty filters cause the unit to consume more energy than normally needed to condition a room. Once the filter has been cleaned or replaced, the LED should go out. If the LED is still illuminated after the filter has been cleaned, activate the Diagnostic and Status mode to view any active codes. The unit may need additional cleaning or maintenance of the evaporator or condenser coils. Please perform this step before calling a servicer. A servicer should be called only if cleaning the filter or coils does not clear the status code or the code indicates that servicer should be called.

SERVICING

Diagnostic Status Report Mode

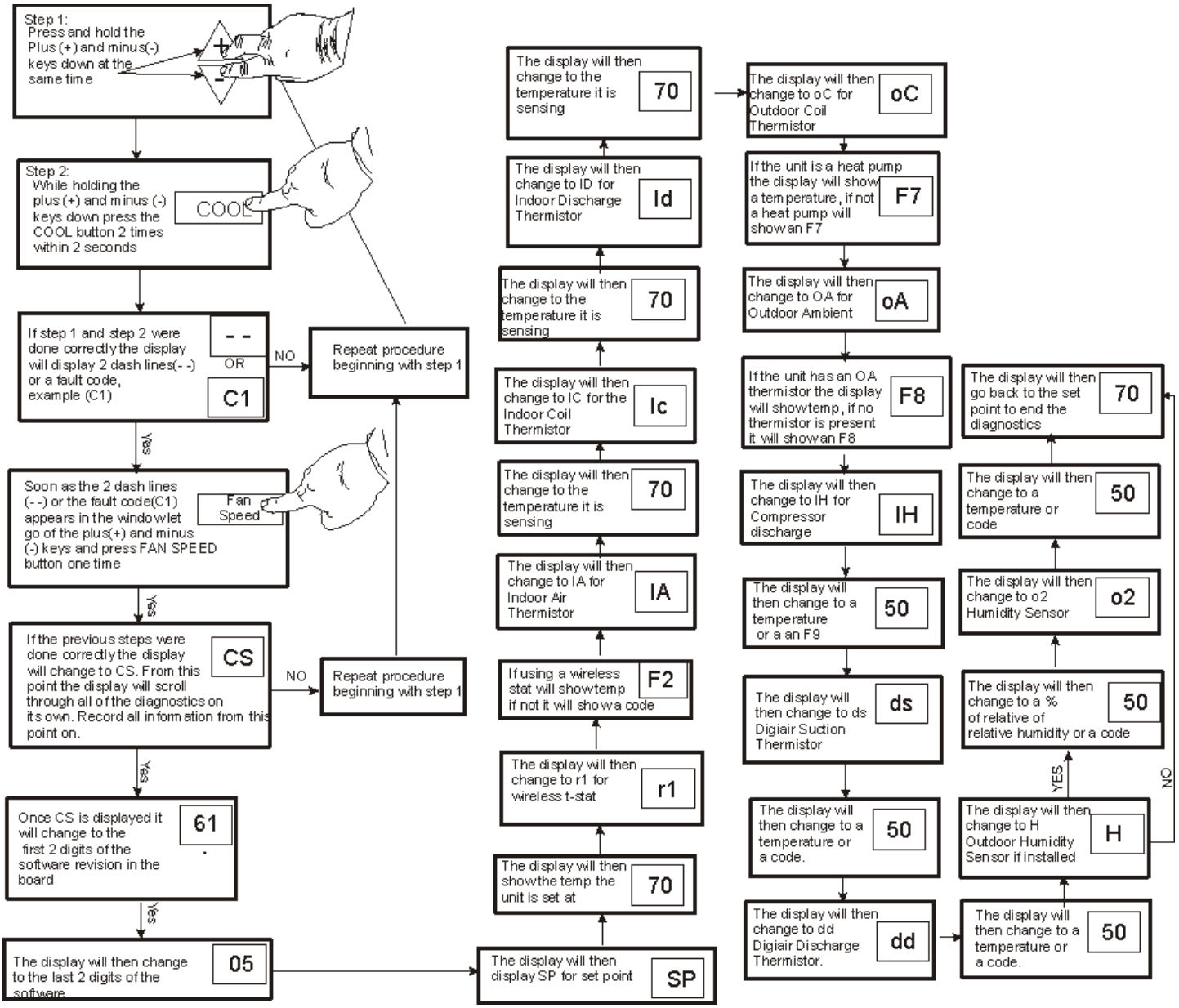

SERVICING

Code	Laymanized Cause	Technical Cause	Suggested Actions	Displayed 100% of Time	Displayed in Diagnostics	Logged
A1	Alarm	Switch is closed on IN1 or IN2	Normal, check switch, check (u8) & (u9)	N	Y	Y
br	Brown out	Transformer secondary < 19Vac	Check outlet, check 24V board power supply	Y	N/A	N
C1	Hyd coil freeze protection	IDT < 35	Clean Filter, Evap, or remove blockage	N	Y	Y
C2	Indoor recirculation	$\lvert IAT_2\text{-}RIAT_2 \rvert > (J4)$ (> 2 minutes of blower)	Clean Filter, Evap, or remove blockage	N	Y	Y
C3	Refrigeration issue	If $ICT_0 > 65$ & <75; & $IAT_0<77$; $\lvert ICT_7\text{-}ICT_0 \rvert > (J5)$	Check Filter, Fan, Refrigerant, Cap tube.	N	Y	Y
C4	Frozen ID coil	L3 error + IAT > (J6)	Check Fan Op., Refrigerant, Cap tube	N	Y	Y
C5	Outdoor recirculation	$OCT_7.OAT_7 > (J7)$	Check for blocked Outdoor coil / Recirculation	N	Y	Y
C6	Low Delta T	$IAT_7\text{-}IDT_7<10$, & $OAT > 50$ & < 90	Check compressor, fan, & heater Op.	N	Y	Y
C7	Frozen ID coil	$ICT_{10}\text{-}IAT_{10}>20$	Check Fan Op., Refrigerant, Cap tube	N	Y	Y
d4	DC Motor Control Issue	Communication loss to DC motor control	Check cable, check motor control & motors	Y	Y	Y
d5	OD DC Motor Issue	OD DC motor not within 35% of expected RPM	Check motor control, replace OD motor	Y	Y	Y
d6	DC Motor Issue	ID DC motor not within 35% of expected RPM	Check motor control, replace ID motor	Y	Y	Y
Ec	Relay Configuration Error	(P3), (P4), (P5), or (P6) configured incorrectly	Check configurations; cycle power	Y	Y	Y
EH	Emergency. Hydronic	Emergency hydronic switch is closed on IN1 or IN2	Normal, open switch, check switch, check (u8) & (u	N	Y	N
Eo	Service Board	(C3) has been set to "0" for service board	Configure C3 configuration point for C or H	Y	Y	N
F-	IAT on OD RH Sensor bad	Temp thermistor on indoor humidity sensor bad	Ignore or replace RH Sensor	N	Y	N
F0	One or more bad thermistors	Line Diagnostic Only; all thermistors not close on 1st sta	Check all Thermistor temps soaked in ambient.	N	Y	N
F1	IAT Sensor bad	IAT < -20, or > 150, or open, or shorted (no RIAT)	Replace Thermistor	Y	Y	Y
F2	T-stat Sensor bad	RIAT < -20, or > 130, or open, or shorted	Replace Thermostat	N	N	N
F3	IAT Sensor bad	IAT < -20, or > 150, or open, or shorted (RIAT good)	Replace Thermistor	N	Y	Y
F4	ICT Sensor bad	ICT < -20, or > 200, or open, or shorted	Replace Thermistor	N	Y	Y
F5	DS01* signal loss	Signal to wireless thermostat lost for > 15 min.	Re-bind, Replace Wireless Thermostat	N	Y	Y
F6	IDT Sensor bad	IDT < -20, or > 233, or open, or shorted	Replace Thermistor	N	Y	Y
F7	OCT Sensor bad	OCT < -20, or > 200, or open, or shorted	Normal Op. for PTC w/o DT01*, Replace as needed	N	N	N
F8	OAT Sensor bad	OAT < -20, or > 200, or open, or shorted	Normal Op. w/o DT01*, Replace as needed	N	N	N
F9	IHD Sensor bad	IHD < -20, or > 233, or open, or shorted	Normal Op. w/o DT01*, Replace as needed	N	N	N
FA	DigiAir suction cold	DST<20	Check kit filter, & kit for air blockage	N	Y	Y
Fb	Low Battery	Batter Volt < 2.2V in any wireless device	Replace Batteries	N	Y	Y

SERVICING

Fb	Low Battery	Batter Volt < 2.2V in any wireless device	Replace Batteries	N	Y	Y
FC	DST Sensor bad	DST < -20, or > 200, or open, or shorted	Normal Op. w/o DigiAir Module; replace if needed	N	Y	N
Fd	Front Desk	Front desk switch is closed on IN1 or IN2	Normal, open switch, check switch, check (u8) & (u	Y	Y	N
FH	DDT Sensor bad	DDT < -40, or > 257, or open, or shorted	Normal Op. w/o DigiAir Module; replace if needed	N	Y	N
Fh	OD %RH Sensor bad	Outdoor humidity sensor bad	Replace RH Sensor	N	Y	N
Fo	OAT on ID RH Sensor bad	Temp thermistor on outdoor humidity sensor bad	Replace RH Sensor	N	Y	N
FP	Room Freeze Protection	Room < (Jb)	Normal Op. in low temp room; self correcting	Y	N	N
Fr	ID %RH Sensor bad	Indoor humidity sensor bad	Replace RH Sensor	N	Y	N
H1	High Voltage	Transformer secondary > 32.5 Vac	Check receptacle voltage & transformer tap	Y	Y	Y
H2	Hot compressor discharge	IHD>210-(JP)	Condenser blockage; restriction	N	Y	Y
H4	Hot compressor discharge	IHD>230-(JP)	Condenser blockage; restriction	Y	Y	Y
HA	DigiAir discharge hot	DDT>250	Check kit filter, & kit for air blockage	N	Y	Y
Hc	Hyd coil freeze protection	IHD<35 & (JJ)=28	Water or steam value opens automatically to warm c	N	Y	N
HF	Hyd heat deficiency	IHD<100 & (JJ)=28	Blower engages only when hydronics is warm	N	Y	N
HP	Room Heat Protection	Room > (u3)	Normal Op. in high temp room; self correcting	Y	Y	N
L	Binding	Off button has been held down to initiate binding process	Complete binding & press Off; self ending in 45 sec.	Y	N	N
L3	Frosting indoor coil	ICT_{15} < 30	Normal Op. in low temp; leak or restriction otherwise	N	Y	Y
L4	Too hot indoor coil in HP	ICT > (J1)	Condenser blockage; restriction	N	Y	Y
L5	Load Shedding	Load shedding switch is closed on IN1 or IN2	Normal, open switch, check switch, check (u8) & (u	N	Y	N
L6	Electric discharge too hot	IDT > 100+(J2)	Condenser blockage; restriction	N	Y	Y
L7	DigiAir refrigeration issue	DDT-DST>200 or <80	Check kit filter, & kit for air blockage	N	Y	Y
LC	OD Coil Hot Lockout	OCT > 160	Clean Cond., Check Fan	N	Y	Y
LE	OD Coil Frosted Lockout	OCT_0<27	Normal Op. in Low Temp	N	Y	N
LF	OD Coil Frost Lockout	$OCT_{1\text{-}9}$<20; OCT_{10}<27	Normal Op. in Low Temp	N	Y	N
nA	Antenna Issue	Antenna Cable loose or broken (may show while Binding)	Replace antenna cable; replace antenna	N	N	N
oP	Open door lockout	Door switch is closed on IN1 or IN2 or wireless	Normal, close door, check switch, check (u8) & (u9)	Y	Y	N
Pr	Programing	Software on daughter board being upgraded	Wait to self clear	Y	Y	N
rC	Wireless Twinned Control	(C3) & (C4) same, (r5) ≥11 & ≤19 but different, EC1	Normal	Y	Y	N
Ur	Unrented Room	Property has set unit to unrented state	Front Desk to set to Rented mode if applicable	Y	Y	N
	flashing service LED	Corrupted software	Re-flash software with tool			

Status
Status affecting Operation
Error not affecting Operation
Error affecting Operation
Error Shutdown Functionality
Code disabled by (d5) config

SERVICING

Complaint	No Heat							Unsatisfactory Cooling					System Operating Pressures				Test Method Remedy	See Service Procedure Reference
POSSIBLE CAUSE DOTS IN ANALYSIS GUIDE INDICATE "POSSIBLE CAUSE" SYMPTOM	System Will Not Start	Compressor will not start - fan runs	Compressor and Condenser Fan will not start	Evaporator fan will not start	Condenser fan will not start	Compressor runs - goes off on overload	Compressor cycles on overload	System runs continuously - little cooling	Too cool and then too warm	Not cool enough on warm days	Certain areas too cool others, too warm	Compressor is noisy	Low suction pressure	Low head pressure	High Suction Pressure	High head pressure		
Power Failure	●																Test Voltage	S-1
Blown Fuse	●		●	●													Impact Fuse Size & Type	
Loose Connection	●			●		●											Inspect Connection - Tighten	S-2
Shorted or Broken Wires	●	●	●	●	●	●											Test Circuits With Ohmmeter	S-3
Open Overload	●	●		●	●												Test Continuity of Overloads	S-17A
Faulty Thermostat	●			●					●								Test Continuity of Thermostat & Wiring	S-3
Shorted or Open Capacitor		●			●	●											Test Capacitor	S-15
Internal Overload Open	●																Test Continuity of Overload	S-6
Shorted or Grounded Compressor		●				●											Test Motor Windings	S-17
Compressor Stuck	●					●											Use Test Cord	S-17
Open Control Circuit				●													Test Control Circuit with Voltmeter	S-1
Low Voltage		●				●	●										Test Voltage	S-1
Faulty Evap or Cond. Fan Motor				●									●				Repair or Replace	S-16
Shorted or Grounded Fan Motor					●											●	Test Motor Windings	S-16
Shortage or Refrigerant							●	●					●	●			Test for Leaks, Replace Drier	S-1, S-2
Restructed Liquid Line							●	●					●	●			Replace Restricted Part	
Dirty Air Filter								●		●	●		●			●	Inspect Filter - Clean or Replace	
Dirty Indoor Coil								●		●	●		●			●	Inspect Coil - Clean	
Airflow Across Coils															●		Check Motor Operation	
Overcharge of Refrigerant						●	●								●	●	Recover & Replace Cap Tube	S-116
Dirty Outdoor Coil						●	●			●						●	Inspect Coil - Clean	
Noncondensibles							●			●						●	Remove Charge, Replace Cap Tube	S-1, S-2
Recirculation of Condensing Air							●			●						●	Remove Obstruction to Air Flow	
Infiltration of Outdoor Air								●		●	●						Check Windows, Doors, Vent Fans, etc.	
Improperly Located Thermostat						●			●								Relocate Thermostat	
System Undersized								●		●							Refigure Cooling Load	
Broken Internal Parts												●					Replace Compressor	S-17
Broken Values												●					Test Compressor Efficiency	S-104
Inefficient Compressor								●						●	●		Test Compressor Efficiency	S-104

SERVICING

Checking Voltage

1. Using a voltmeter, measure the voltage across terminals L1 and L2 of the outlet.
2. No reading - indicates open wiring, open fuse(s), no power or etc. from the unit to fused disconnect service. Repair as needed.

Checking Thermostat, Wiring and Anticipator

1. Visually inspect all the wires.
2. Check wires for loose connections (tighten as needed or replace Terminal if needed).
3. Check wires for pinched or cut wires.

With power ON and thermostat calling for cooling.

1. Use a voltmeter to check for 24 volts at thermostat wires C and R on the terminal strip of the control board.
2. No voltage indicates trouble in the thermostat, wiring or external transformer source.
3. Check the continuity of the thermostat and wiring. Repair or replace as necessary.

Indoor Ambient Themristor

1. Remove the front cover.
2. The thermistor is on the front of the unit and plugs in the lower right corner of the board. Unplug the thermistor from the board.
3. Check continuity between the thermistor wires, see chart for resistance and temperature ranges . If out of range replace the thermistor.

Indoor Coil Thermistor

See following page for resistance/temperature

1. Remove front cover.
2. Remove the two mounting screws, one on each side of the control board cover. Tilting the control panel out, remove the cover.
3. Disconnect the red thermistor from the control board's ICT Red CONNECTOR.
4. Check continuity between the thermistor wires, see chart for resistance and temperature ranges. If out of range replace the thermistor.
5. To replace the indoor coil thermistor remove the access plate shown in picture below to gain access to the thermistor. Thermistor goes through the side panel into control board compartment.

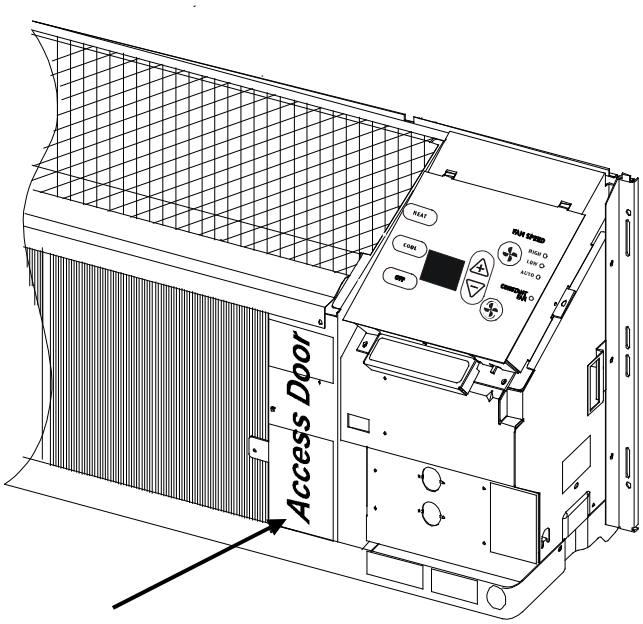

Outdoor Coil Thermistor

1. Remove chassis from wall sleeve.
2. Remove the two mounting screws, one on each side of the control board cover. Tilting the control panel out.
3. Unplug the Blue Thermistor from the connector.
4. Unclip thermistor from outdoor coil.
5. Carefully slide thermistor wiring through the center partition. When replacing, be sure all holes in the center partition are properly sealed with Permagum.

SERVICING

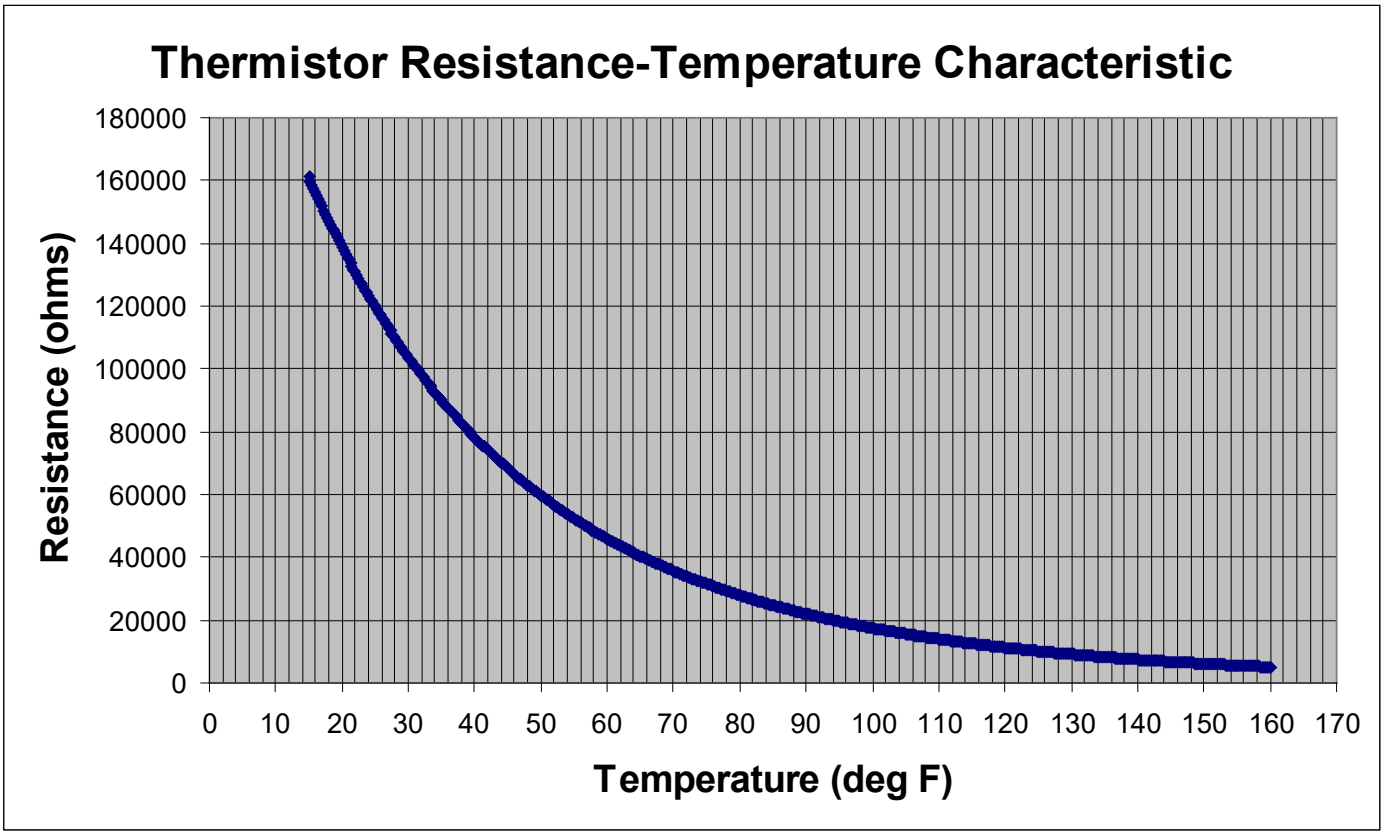

Chart applies to black, red, blue, yellow and green wires; it does not apply to orange wires.

Checking OCT Thermistor

1. With power off, remove the thermistor leads from the circuit board.
2. Check the thermistor for continuity. See chart above for resistance values.
3. Replace thermistor if it does not test as above.

Heater Assembly

1. Disconnect power to the unit
2. Remove front cover of unit.
3. Remove the three screws securing the indoor fan motor cover and remove the cover. See Figure A.
4. Remove the 8 screws securing the partition panel top to the chassis, Figure A.
5. Remove the 2 screws securing the two tie braces to the partition panel. See Figure A.
6. Remove the partition panel top
7. Remove the 4 screws on the top of the evaporator, Figure A.

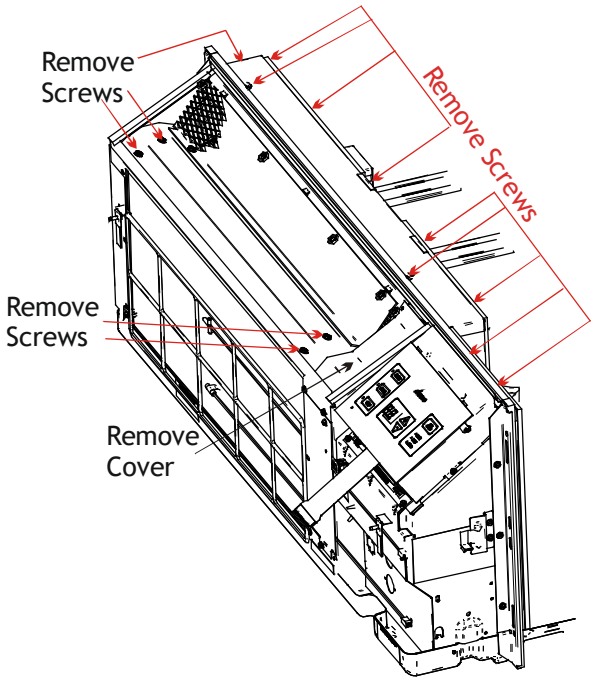

Figure A

8. Remove the two screws on the left side panel securing the motor panel assembly, Figure B.

SERVICING

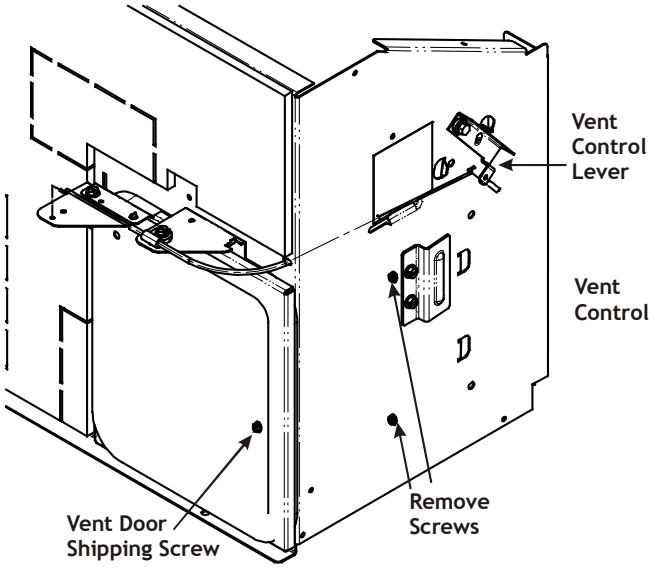

Figure B

9. Lift up on the right side of the fan motor assembly to release the housing.
10. Slide whole assembly to the right as you are looking at it and lift the assembly straight up.
11. Remove the two screws securing the heater assembly, Figure C.
12. Remove heater assembly and disconnect wires from the heater.

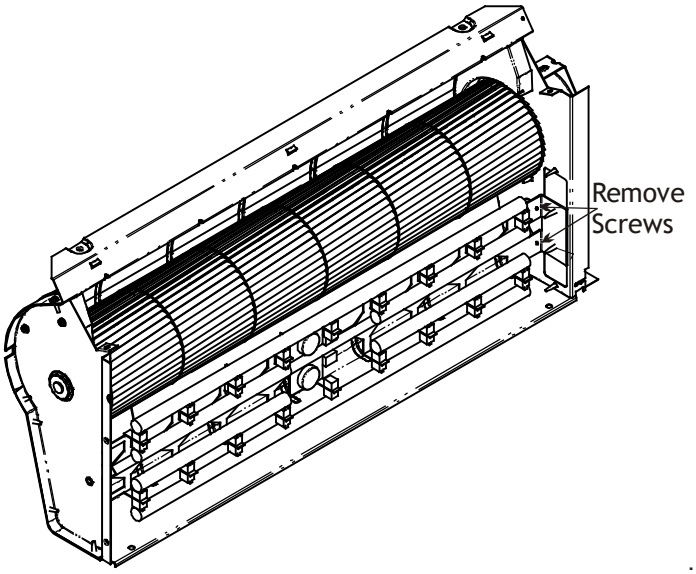

Figure C

Checking Heater Assembly

1. With power off to the unit and heater, remove the heaters in question and visually inspect the element for broken condition.
2. Remove the wires from the element and check for continuity through the heater. If there is no continuity the heater needs to be replaced.

Drain Pan Valve (Heat Pump Models Only)

1. Remove the chassis from the wall sleeve.
2. Remove the mounting screw and remove the drain valve.

The drain pan operates to remove condensate from base pan. This is a thermal operated device that opens at 40°F and closes at 60°F.

Checking Operation of the Drain Valve

1. Cool the valve to 40°F or below and the plunger should open.
2. Warm the valve up to 60°F and the plunger should close.

Capacitor Check

1. Remove front cover.
2. Remove the two mounting screws, one on each side of the control board cover. Tilting the control panel out, disconnect ribbon connector from control board. DO NOT PULL ON RIBBON. GRASP THE BLACK RIBBON CONNECTOR AND PULL GENTLY.
3. Disconnect all wiring to the capacitor. Label the wires to ensure proper reassembly.
4. Remove the screw securing the capacitor mounting clamp to the center partition. Remove the capacitor.

Resistance Check

Discharge capacitor and remove wire leads.

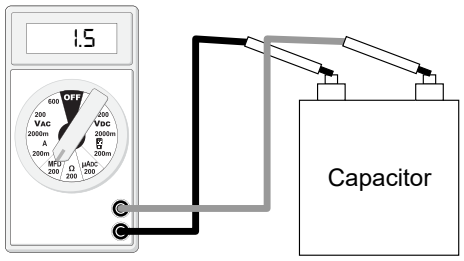

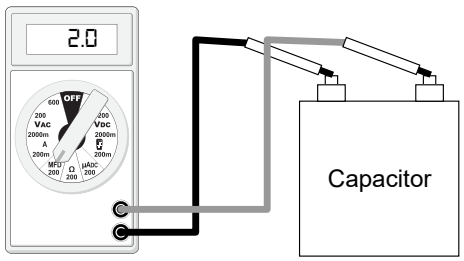

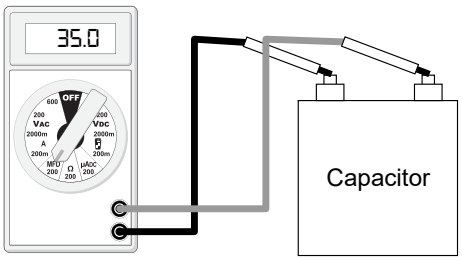

SERVICING

Capacitor Resistance Test

A. Good Condition - indicator swings to zero and slowly returns to infinity. (Start capacitor with bleed resistor will not return to infinity. It will still read the resistance of the resistor).
B. Shorted - indicator swings to zero and stops there - replace.
C. Open - no reading - replace. (Start capacitor would read resistor resistance).
2. Testing for ohms between either capacitor terminal and the capacitor body must show infinite ohms.

Capacitance Check

Using a hookup as shown below, take the amperage and voltage readings and use them in the formula:

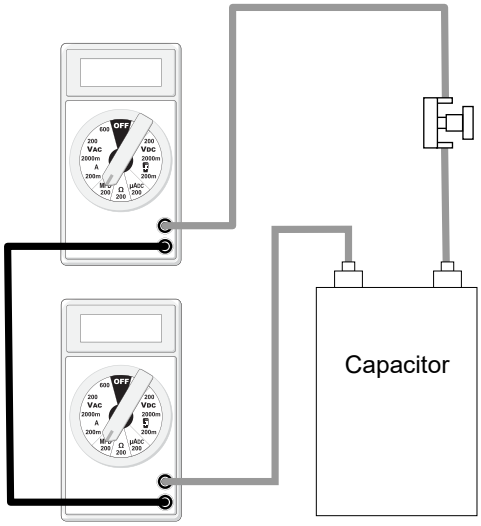

Capacitance (MFD) = 2650 X Amperage
Voltage

If the value obtained is not within 10% of the rating printed on the capacitor, replace.

Checking Fan and Motor Blower Windings

Blower Wheel, Blower Motor, Fan Blade

1. Disconnect power to the unit.
2. Remove front cover of unit.
3. Remove the three screws securing the indoor fan motor cover and remove the cover. See Figure D.
4. Remove the 8 screws securing the partition panel top to the chassis, Figure D.
5. Remove the 2 screws securing the two tie braces to the partition panel. See Figure D.
6. Remove the partition panel top
7. Remove the 4 screws on the top of the evaporator, Figure D.

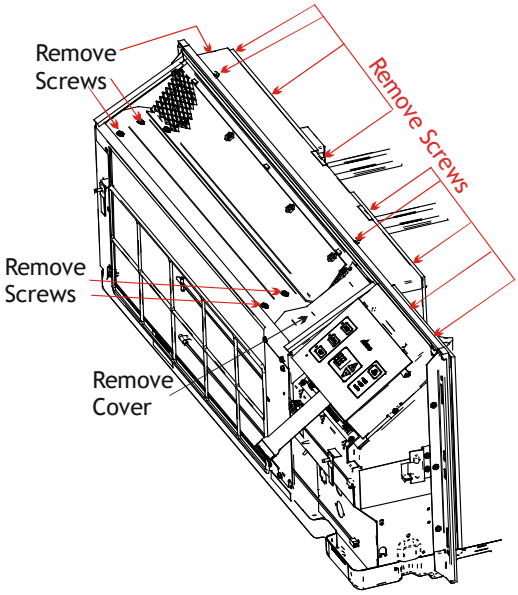

Figure D

8. Remove the two screws on the left side panel securing the motor panel assembly, Figure E.

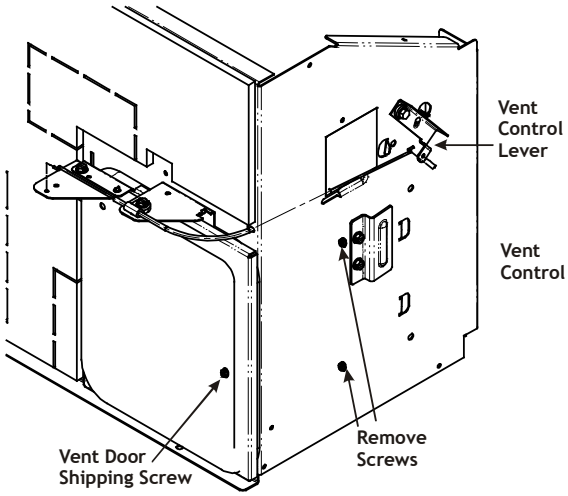

Figure E

9. Remove the partition panel top.
10. Remove the 4 screws on the cut off (top of the evaporator) and remove, Figure F.
11. Remove the two screws on the left side panel securing the motor panel assembly. See Figure F.

SERVICING

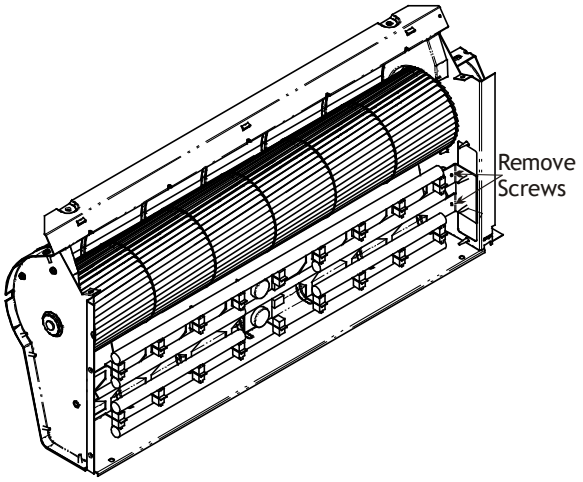

Figure F

12. Lift up on the right side of the fan motor assembly to release the housing.
13. Slide the assembly to the right as you are looking at it, and lift the assembly straight up.
14. Loosen the set screw on the blower wheel
15. Remove the three screws securing the motor to the housing and remove the motor from the blower wheel.
16. Disconnect the blower motor wiring as follows:
    White from capacitor C terminal
    Red from control board FAN LOW terminal
    Brown from capacitor FAN terminal
    Black from control board FAN HIGH terminal
    Gently pull the wire through the center partition.

The auto reset fan motor overload is designed to protect the motor against high temperature and high amperage conditions by breaking the common circuit within the motor, similar to the compressor internal overload. However, heat generated within the motor is faster to dissipate than the compressor, allow at least 45 minutes for the overload to reset, then retest.

1. Remove the motor leads from their respective connection points and capacitor (if applicable).
2. Check the continuity between each of the motor leads.
3. Touch one probe of the ohmmeter to the motor frame (ground) and the other probe in turn to each lead.

If the windings do not test continuous or a reading is obtained from lead to ground, replace the motor.

Compressor Windings

1. Remove the chassis from the wall sleeve.
2. Remove the compressor terminal cap and disconnect all compressor wiring.
3. After capturing the refrigerant from the system, debraze the inlet and discharge tubing from the compressor.
4. Remove the three foot mounting bolts and remove the compressor.

If the test indicates shorted, grounded or open windings, see procedure for the next steps to be taken.

Resistance Test

1. With no power, remove the leads from the compressor terminals.
2. Touch the leads of an ohmmeter to terminals C-S, start windings and C-R, run winding.

Ground Test

With no power and compressor leads removed:
Set an ohmmeter on its highest scale. Touch one lead to the compressor body (clean point of contact, as a good connection is a must) and the other probe to each compressor terminal in turn. If a reading is obtained, then the compressor is grounded and must be replaced.

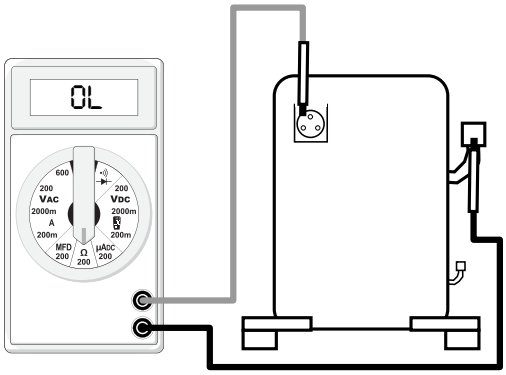

Compressor Ground Test

If the voltage, capacitor, overload and motor windings test fail to show the cause for failure.

With no power, wire a test cord to line voltage (L1 & L2).
NOTE: The wire size of the test cord must equal the line size, and the fuses in the test line must be of the proper size and type.

Test Cord Connections

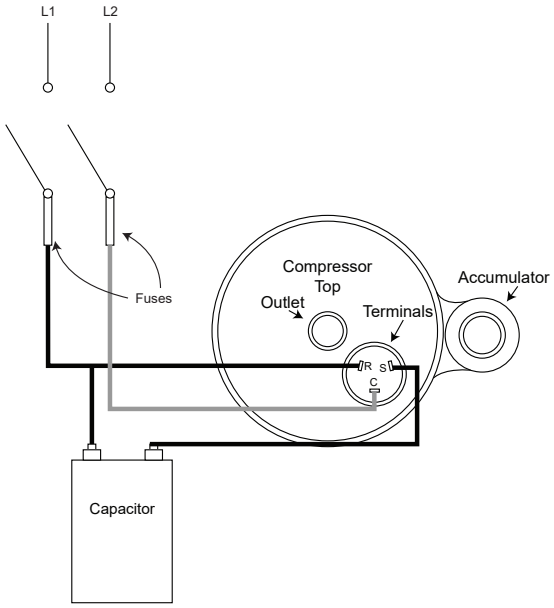

1. Connect a good capacitor of the right MFD and voltage rating into the circuit as shown.

SERVICING

2. Carefully apply line voltage.

A. If the compressor starts and continues run, the cause for failure is somewhere else in the system.

B. If the motor fails to start - replace.

Since all single phase compressors are of the permanent split capacitor design the high and low side pressure must be approximately equal or the low torque compressor may not start.

Overload

Each compressor is equipped with an internal overload. The line break internal overload senses both motor amperage and winding temperature. High motor temperature or amperage heats the disc causing it to open, breaking the common circuit within the compressor.

Fuse, circuit breaker, ground fault protective device, etc. has not tripped.

1. With no power to the unit, remove the compressor cover, and overload lead from the compressor terminal.
2. Using an ohmmeter: Test continuity between terminals of the overload. If not continuous, the overload is open, replace the overload.

Checking Compressor Efficiency

The reason for compressor inefficiency is broken or damaged suction and/or discharge valves, or scroll flanks on Scroll compressors, reducing the ability of the compressor to pump refrigerant vapor.

The condition of the valves or scroll flanks is checked in the following manner.

1. Attach gauges to the high and low side of the system.
2. Start the system and run a “Cooling Performance Test.

If the test shows:

A. Below normal high side pressure.

B. Above normal low side pressure.

C. Low temperature difference across coil.

B. Low amp draw at compressor.

and the charge is correct. The compressor is faulty - replace the compressor. NOTE: THIS TEST CANNOT BE DONE IN THE HEATING MODE.

Filter Drier Replacement

1. Remove the two screws securing the front. Not all installations have the screws. Then remove the front. Do this by pulling the bottom corners out and lifting up.

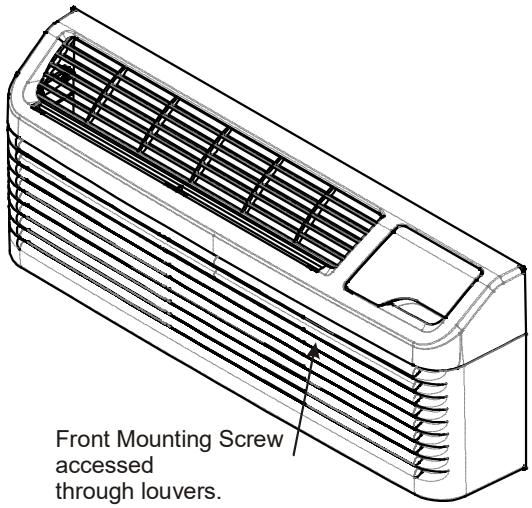

2. Remove the six screws securing the unit to the wall sleeve. If screws are not present they should be installed when units is reinstalled.
3. Pull unit from wall sleeve and take unit to adequate work area. Taking care not to spill any condensate which may still be in the basepan.
   IMPORTANT NOTE: Effective July 1,1992. Before opening any refrigerant system it is the responsibility of the service technician to capture the refrigerant for safe disposal.
4. After all the refrigerant has been recovered from the system, remove bottom of strainer by unbrazing the strainer from the condenser elbow. Hold the strainer with a pair of pliers while heating up the brazed joint with a torch. When joint is hot pull up on strainer and remove.
   Heat up Capillary tube and remove from line.

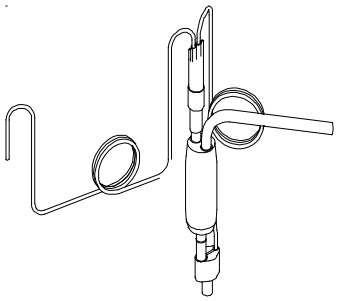

5. To install the new filter drier assembly, remove the end plugs and clean the ends to be brazed into place.
6. Clean the end of the capillary tube and insert into the tube, it may be necessary to crimp tubing around the capillary tube, being careful not to damage the capillary tube. Insert the bottom of the filter drier into the condenser elbow, it may be necessary to heat slightly to get coupling to go into place.

Brazing

Satisfactory results require cleanliness, experience and the use of proper material and equipment.

The connections to be brazed must be properly sized, free of rough edges and clean.

SERVICING

The generally accepted materials are:

- SIL-FOS (Alloy of 15% silver, 80% copper, 5% phosphorus) is used without flux on copper to copper. DO NOT USE FOR A COPPER TO STEEL CONNECTION. Recommended heat is approximately 1400°F.
- SILVER SOLDER (Alloy of 30% silver, 38% copper, 32% zinc.) Is used with fluoride base flux on copper to steel, brass to copper, steel to steel, brass to steel. Recommended heat is approximately 1200°F. This is the most important part of the entire service procedure.

8. Braze coupling and cap tube into place.

Reversing Valve

Occasionally the reversing valve may stick in the heating or cooling position or in the mid-operation.
When stuck in the mid-position, part of the discharge gas from the compressor is directed back to the suction side resulting in excessively high suction pressure.
Check the operation of the valve by starting the system and switching the operation from COOLING to HEATING and then back to COOLING.
If the valve fails to change its position, test the voltage (230 V. or 265 V.) at the valve coil connector cap, while the system is on the HEATING CYCLE.

If no voltage is registered to the coil, check the operation of the reversing relay and the continuity of the connecting wires.
If voltage is registered at the coil, tap the valve body lightly while switching the system from HEATING to COOLING etc. If this fails to cause the valve to switch position, remove the coil connector cap and wiring and test the continuity of the valve coil. If the coil does not test continuous replace it.
If the valve is inoperative, replace.

Sound Level

Noise complaints are frequently caused by a faulty installation or by the customer's lack of knowledge and information. Sources of actual noise may be traced to operational components, tubing vibration, or misalignment of case or sleeve with chassis.

Component Replacement

Replacement of the compressor, evaporator, condenser, capillary tubes and reversing valve must be in accordance with accepted service practices. These procedures include a complete evacuation of both high and low sides, and changing of both strainer whenever the refrigerant system is opened.
Before replacing a component in the sealed system, make sure that the cause for complaint does not lie in the electrical circuit, control, overload or is due to some other reason. The serviceman must be familiar with the operational characteristics of the product and should not jump to conclusions.
Front Cover

1. Remove the two screws securing the front to the chassis.

NOTE: Not all installations will use these screws.

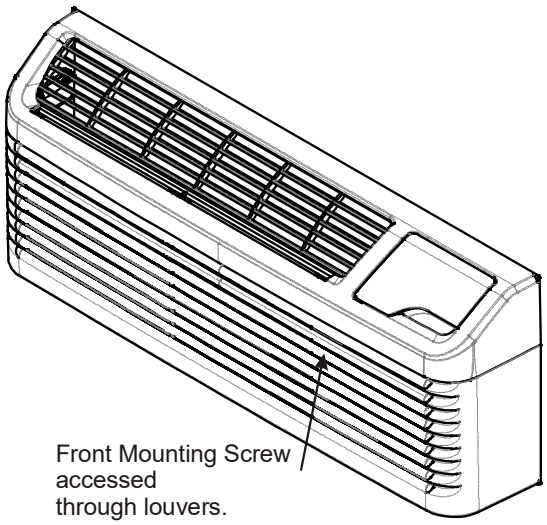

2. Grasp the cabinet front as shown.

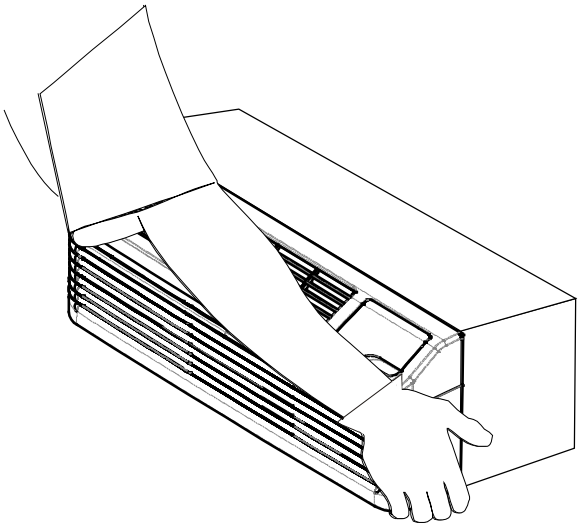

3. Pull the bottom of the cabinet front away from the chassis until the retaining clips disengage.

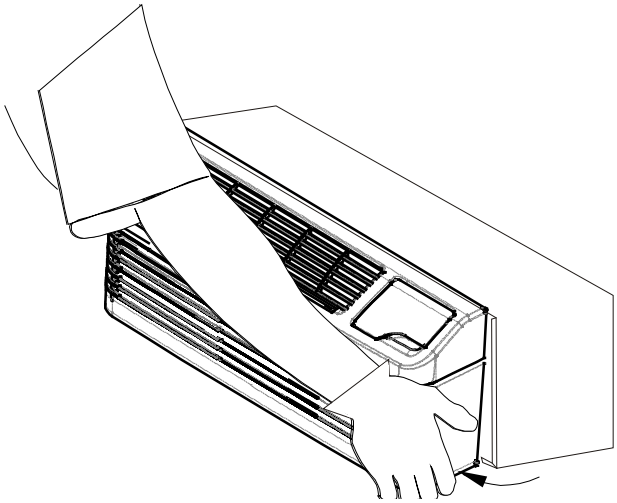

4. Lift the cabinet front off the chassis. Reverse this proce-

dure to reinstall the cabinet front.

Chassis

1. Disconnect power to the unit.
2. Remove the front cover.
3. Remove three screws on each side of the chassis, securing the chassis to the wall sleeve.
4. Carefully slide chassis out of wall sleeve, placing on floor or protected cart.

Escutcheon, Control Board, Control Panel

1. Remove front cover.
2. Remove the two mounting screws, one on each side of the control board cover. Tilting the control panel out, disconnect ribbon connector from control board. DO NOT PULL ON RIBBON. GRASP THE BLACK RIBBON CONNECTOR AND PULL GENTLY.
3. Disconnect all wiring to the control board. Label the wires to ensure proper reassembly.
4. Remove the thermistor in front of the evaporator.
5. Remove the four control board mounting screws and remove the control board.

Outdoor Coil

1. Remove the chassis from the wall sleeve.
2. After capturing the refrigerant from the system, debraze the inlet and discharge tubing from the outdoor coil.
3. Remove all screws from the sides of the outdoor coil securing the shroud to the coil.
4. Pressing the tabs on the right side of the shroud separate the shroud from the outdoor coil.
5. The “E-K” models have a four piece condenser shroud where the top, sides and shroud will come apart separately.
6. Remove the two screw securing the outdoor coil to the base pan.
7. Carefully lift the outdoor coil over the basepan lip.

Vent Door

1. Remove Chassis from wall sleeve.
2. Remove P clamp securing vent door control cable to center partition and disconnect cable from vent door.
3. Remove vent door by opening door and pulling hinge tabs out of slots in center partition.
4. Remove the door by pulling hinge tabs out away from the center partition.

DigiAIR™ Product Information

The Amana brand PTAC factory installed DigiAIR™ module is a “make–up air” system to assist in providing outside air into a room (living space) to replace ventilation air that is usually removed through an exhaust air system in bathroom areas. This exhausted air creates a negative air pressure in the room and the DigiAIR™ make up air system is designed to move most of the needed replacement outside air to enter the room through the DigiAIR™ dehumidification module. To assist in this needed outside make up air to be directed to come through the DigiAIR™ dehumidification module, a fan in the module operates continuously (as long as the module is properly maintained and powered), to provide positive pressure through the DigiAIR™ module to the inside room.

The DigiAIR™ Amana brand PTAC is a 2 compressor system. The Amana brand R410A PTAC system is used to assist in control of the sensible heat (room temperature) and latent load (moisture) that is brought into the room by the DigiAIR system and also the typical sensible and latent loads created in the room from occupants and typical air infiltration. The DigiAIR™ module is an R134A compressor system designed to continuously provide outside make up air at rates of up 75 CFM (dependent on the room’s negative pressure *). The outside air entering the room through the DigiAIR™ module is first filtered, to assist in keeping the DigiAIR™ coils clean, and then dehumidified. The DigiAIR™ dehumidification is engaged at outside air temperatures and humidity levels (RH%: Relative Humidity) when the air entering the room generally should have moisture reduced before it comes into the room.

The DigiAIR™ compressor/dehumidification process is controlled both by a humidity sensor and temperature sensor that monitor the outdoor environment. The DigiAIR™ module is factory pre-set at

50% RH: > 46° F and < 68° F
40% RH: > 68° F and < 78° F
25% RH: > 78° F

When the outdoor humidity (RH %) and temperature levels are above the DigiAIR™ settings, the compressor and dehumidification process begins. If the outdoor humidity level drops below the RH% settings at the temperatures above or the outdoor temperature drops below 48° F the compressor dehumidification operation ceases. The DigiAIR™ dehumidification RH% can easily be adjusted through the Amana brand PTAC touch pad, if changes to the factory preset RH% are desired. The 25% RH setting can be adjusted to as low as 15% or as high as 60%. The factory preset ranges are based on HVAC industry psychometric chart sensible temperature and humidity ratios that would generally require outside air to be dehumidified before being introduced into a room and should suffice from most applications.

A temperature sensor (brown thermistor) monitors the refrigeration temperature coming into the compressor (suction line) to protect against potential liquid refrigerant entering the compressor. If refrigerant temperatures are too low, the compressor will be cutoff to help protect the compressor from liquid refrigerant damage. A temperature sensor (green thermistor) monitors the outdoor air temperature, and if the temperature falls below 48°F, the compressor is disabled. Generally, at air temperatures below 48° F, the air coming through the DigiAIR™ module does not need to be dehumidified before entering the indoor room. Additionally, since the dehumidification coil (evaporator) is generally operating 12° F to 18° F below the outdoor temperature, the compressor should be cut off to prevent the evaporator coil from frosting or icing and not being able to exchange heat. A frosted or iced coil cannot dehumidify the incoming air. All dehumidifier controls and safety features are automatically reset.

SERVICING

The DigiAIR™ fan, when the unit is properly powered and maintained, will operate 24/7/365 to provide continuous outside makeup air, even when the compressor is not operating. For installation locations where the winters are cold, or it is desired to warm the air coming through the DigiAIR™ system before it enters the room, an optional 250 watt electric heater is available for the make-up air system. Condensate water generated from the DigiAIR™ dehumidifier operation drains directly into the PTAC's exterior base pan. When the PTAC's R410A compressor is operating in the cooling mode, and the outside air temperature is above 60° F, condensate water in the PTAC's exterior base pan will be picked up and slung onto the condenser coil for re-evaporation to the outside air. Excess condensate is drained into the PTAC's wall case from which it can drain either to the outside through the drain holes in the sleeve or piped to a drainage system with the use of an optional drain kit. Since condensate water can be generated from the PTACs compressor operation in either the cooling mode or, in the case of a heat pump, during reverse cycle operation plus the added condensate water generated from the DigiAIR™ dehumidification operation, a piped condensate drain system is highly recommended.

- NOTE: A DigiAIR™ module is intended to work in conjunction with a building exhaust system. As an example, to obtain 55 CFM of outside makeup air, the room exhaust ventilation system needs to create a 0.053 (inches H2O) negative static pressure in the indoor conditioned room. CFM can be increased or decreased by increasing or lowering the negative static pressure created by the property ventilation system. The DigiAIR can provide up to 75 CFM when negative static pressures are increased to a high enough level. Failure to properly exhaust the air introduced by the DigiAIR™ makeup air module will result in poor performance of both the outside air volumes (CFM) and the proper dehumidification of the makeup air.

This unit is shipped, tested and rated with the dehumidification switch off.

Dehumidification Kit Volts	230
Frequency (Hz)	60
Phase	1
Dehmid Comp. RLA	1.05
Dehumid comp. LRA	3.30
Res. Heat Watts	250
Res. Heat Amps	1.10
Refrigerant R-134A Oz.	3.20
High Side Pressure (Psig)	200
Low Side Pressure (Psig)	60
Air Flow (CFM)	55
Dehimidification (Oz/Hr)	5
Kit Weight (lbs)	20

DigiAIR™ System Features

DigiAIR™ is a factory added module to an Amana brand PTAC to provide for outside makeup air that is dehumidified when needed:

1. Lower installation and renovation costs than typical central dedicated outdoor air systems (DOAS).
2. Configurable dehumidification settings based on HVAC industry psychometric data. Configuration can easily and accurately be adjusted through a few button clicks of the PTAC touchpad by any authorized site personnel.
3. Outside Makeup air volumes of up to 75 CFM.
4. Drier room conditions (lower RH %) usually means that room occupants will feel comfortable at higher sensible temperatures saving PTAC operational costs.
5. Optional 250 watt electric heater to warm colder outside air when needed.
6. Filter to assist in keeping the DigiAIR™ coils cleaner to maintain dehumidification and outside air flow. Permanent and washable.
7. Vent door is configurable to either be open 100% of the time or can be closed if codes permit intermittent operation.
8. Future, optional Web access to allow monitoring and configuration access through an Amana DigiSmart / DigiLink internet connectivity.

Installation Instructions

The DigiAIR™ makeup air and dehumidification module is factory installed to the PTAC partition panel and base pan as shown in Figure 2. The optional heater, to raise the inlet air temperature in cold climates, is attached to the indoor section of the partition panel. The DigiAIR™ power switch is shipped from the factory in the "off" position. Before installing the PTAC front cover, change the DigiAIR™ power switch to the "on" position if makeup air is desired. The DigiAIR™ power switch is located on the front of the PTAC control and is visible when the front is not installed. Also, if the DigiAIR™ vent door is to be manually secured in the open position, the vent door screw must be inserted before the PTAC is installed into the wall sleeve.

SERVICING

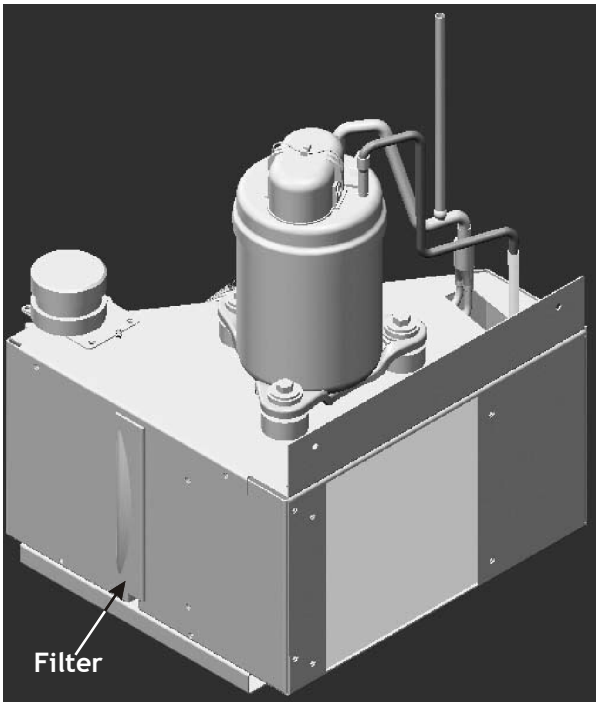

Figure 1 - DigiAIR™ Kit

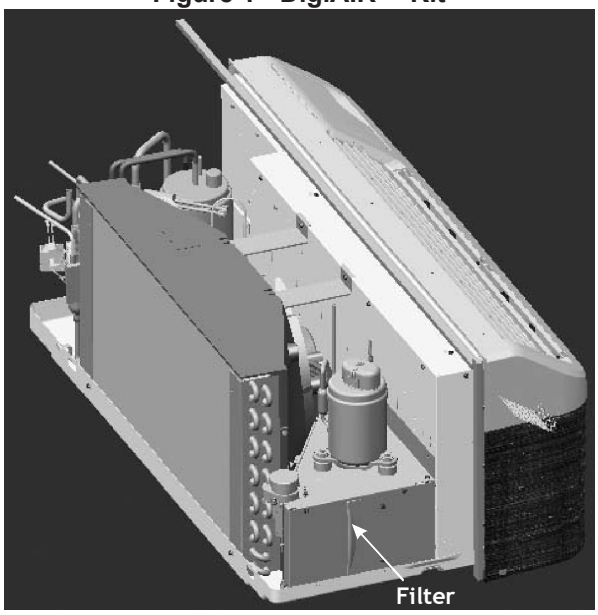

Figure 2 - DigiAIR™ Kit installed in PTAC unit

Power Cord

1. Remove the unit front by tilting the bottom of the front outward and then lift the front straight up.
2. Remove the control knobs on the control panel cover by pulling upward on the knobs. Remove the escutcheon.
3. Remove the control panel cover by removing the two screws holding the control panel cover. Tilt the control panel forward to gain access to the wires.
4. Remove the power cord clamp located near the bottom right of the chassis.

Operating instructions

The DigiAIR™ power switch should be in the “ON” position to activate the module. When this switch is ON and the PTAC unit is properly powered, the fan will operate and the vent door motor will keep the DigiAIR™ vent door in the open position.
This allows makeup outside air to flow through the DigiAIR™ system, 24/7/365. The compressor and optional 250 watt electric resistance heater may be energized when configured temperatures, outside air RH% and operating conditions are met. If codes or property ownership mandate that the makeup air is required 100% of the time, then the DigiAIR™ module should never be powered off.
If preferred, the vent door can be permanently installed in the open position by adding a screw to the additional holes provided in the vent panel and vent door, Figures 3, 4, 5.
To keep the vent door always open, manually align Figures 4 and 5 then insert a screw through the vent door & vent panel holes. See Figure 4 & 5.
If local codes allow for the property (or individual room) ventilation exhaust system to be powered off in extreme weather conditions (very cold weather, dust storms etc.) or when the room becomes unoccupied, the DigiAIR™ module can be powered off and the fan will cease operating and the vent door will slide to the closed position. (if the optional vent door screw is not installed)
NOTE: If it is preferable for the vent door to be manually kept open at all times, the screws must be inserted before the unit is installed into the wall sleeve.

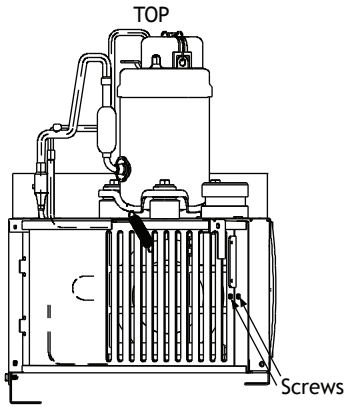

Figure 3

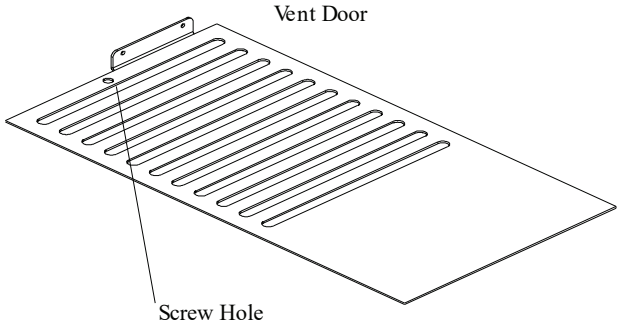

Figure 4

SERVICING

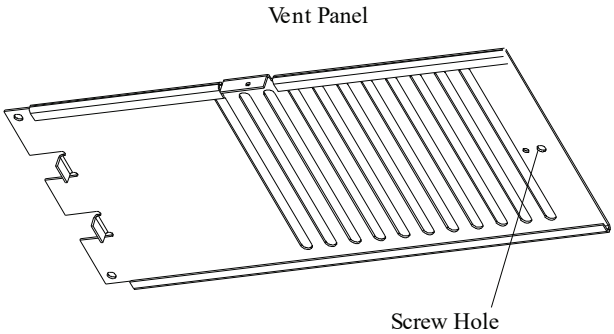

Figure 5

WARNING

HIGH VOLTAGE
DISCONNECT ALL POWER BEFORE SERVICING. MULTIPLE POWER SOURCES MAY BE PRESENT. FAILURE TO DO SO MAY CAUSE PROPERTY DAMAGE, PERSONAL INJURY OR DEATH. DO NOT SERVICE THIS UNIT WITHOUT FIRST SHUTTING OFF POWER TO THE UNIT FROM THE CIRCUIT BREAKER AND/OR REMOVING THE UNIT CORD SET PLUG FROM THE WALL OUTLET.

Maintenance and Cleaning

Complete PTAC maintenance and cleaning instructions can be found in IO-447*.
DigiAIR™ Intake Air Filter
To properly maintain the operational performance of your DigiAIR™ Make-up air module, it is extremely important that the inlet air filter be cleaned, at minimum, every 3 months or more often if operated in dusty or dirty locations or conditions. Dirty filters will dramatically reduce both the supplied CFM of outside air as well as lower the dehumidification of the air passing through the DigiAIR™ module. The intake air filter is constructed of durable polypropylene, and is designed to be permanent and washable.
Filters should be checked frequently after initial installation and operation and cleaned as required. This will assist in establishing the proper time interval to maintain for future scheduled cleaning.
Before cleaning the intake filter, turn off the power to the entire PTAC unit and unplug the unit from the power receptacle.
The following procedure is used to remove the intake filter:

1. Pull the PTAC unit out from the wall sleeve sufficiently to allow access to the filter. See complete instructions for removing and reinstalling the PTAC chassis from the wall sleeve in IO-447*.
2. Grasp the filter by its molded handle, located on the side of the kit (see Figures 1 & 2).
3. Pull the filter straight out from the side and remove.

NOTE: Spare filters are available and you can also replace the existing filters with new ones and remove the dirty filters to a central location to thoroughly clean and have them ready for the next filter check.

4. Clean filter with vacuum or with running water. Reverse this procedure to reinstall the filter.
5. Also inspect and clean the vent door as needed to remove material that can restrict air flow into the DigiAIR module. It is also recommended that the condensate drainage is checked while the DigiAIR™ filter is being cleaned or replaced. Make sure that water is properly allowed to drain from the PTAC base pan and wall sleeve or drainage system. Also, with the added condensate volumes from the DigiAIR™ system, manufactured approved time released algaecide pads should be considered to keep the water flowing properly.
6. Reinstall the PTAC chassis into the wall sleeve. Reinstate power to the PTAC and make sure that the DigiAIR™ power switch is in the on position.
7. While the R410A PTAC is not actively conditioning the air and the PTAC fan(s) are in the off position, check to make sure that air is flowing through the DigiAIR™ module into and through the PTAC into the room.

Obtaining Service for DigiAIR™

In the event this unit requires repair or servicing beyond what is covered in this manual, contact an authorized service organization.
To obtain an authorized servicer, contact your sales representative or agency.

Power Cord

1. Remove the unit front by tilting the bottom of the front outward and then lift the front straight up.
2. Remove the control knobs on the control panel cover by pulling upward on the knobs. Remove the escutcheon.
3. Remove the control panel cover by removing the two screws holding the control panel cover. Tilt the control panel forward to gain access to the wires.
4. Remove the power cord clamp located near the bottom right of the chassis.

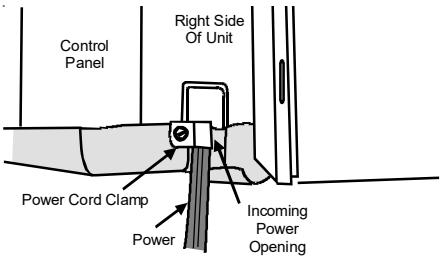

5. On 115 volt or 230/208 volt units disconnect the white lead from the LINE 1 terminal on the control board and the black lead from LINE 2 terminal on the control board and the green ground wire from the partition panel.

On 265 volt units disconnect the ribbed lead from the LINE 1 terminal on the control board and the smooth lead from the fuse holder and the green ground wire from the partition panel.

SERVICING

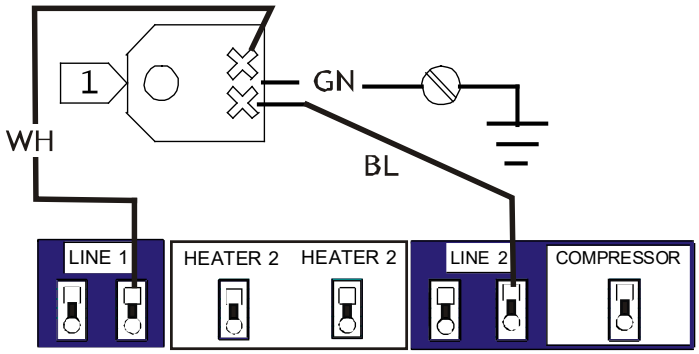

Evaporator

1. Remove front cover.
2. Remove the two mounting screws, one on each side of the control board cover. Tilting the control panel out, disconnect ribbon connector from control board. DO NOT PULL ON RIBBON. GRASP THE BLACK RIBBON CONNECTOR AND PULL GENTLY.
3. Remove the two screws securing the top screen to the evaporator assembly. (Be sure to slide the top of the screen between the top flange and chassis when reassembling.)
4. Remove screws on mid partition panel and shift out of the way.
5. Remove the two screws securing the heater assembly to the evaporator.
6. Pull heater assembly up and out of the chassis.
7. Disconnect all wiring to the heater assembly and remove the assembly.
8. Remove the floodback protector or thermistor from the evaporator discharge tube.
9. Remove screws holding evaporator to basepan and partition panel.
10. After recapturing the refrigerant charge (see Refrigeration Service section), debraze the tubes into the evaporator. Be sure to protect all chassis components, especially foam parts, from excessive heat.
11. Lift the evaporator up over the basepan edge and remove.

ACCESSORIES

Accessory Description	Part Numbers
Antenna	DT01G
Antenna Generic Radio	GT01G
Circuit Breaker Kit(208/230Vonly)	CBK15C, CBK20C and CBK30C
Condensate Drain Kit	DK900D
Condenser Baffle Kit	DGK1B
Door Sensor	DD01G
Duct Extention	EDK02B
Hard Wire kit Quick Disconnect 208/230v	PTQC3A
Hard Wire Kit	PTPWHWK4
Hard Wire Kit Quick Disconnect 265v	PTQC4A
Hydronic Hot water Kit	HWK03
Hydronic Steam Kit	HVK03
Main Duct Kit	MDK01E
Outdoor Grill Architectural	AGK01TB
Outdoor Grill Standard	SGK01B
Subbase Kit 208/230v 15/20A	PTSB320E
Subbase Kit 208/230v 30A	PTSB330E
Subbase Kit 265v 15/20A	PTSB420E
Subbase Kit 265v 25A	PTSB430E
Terminal Duct	TDK02B
Wall Sleeve	WS900E
Web-enabled Platform Servicer	DL01G
Wire Harness Kit	PWHK01C
Wired Wall Thermostat	PHWT-A150H
Wireless Thermostat	DS01G

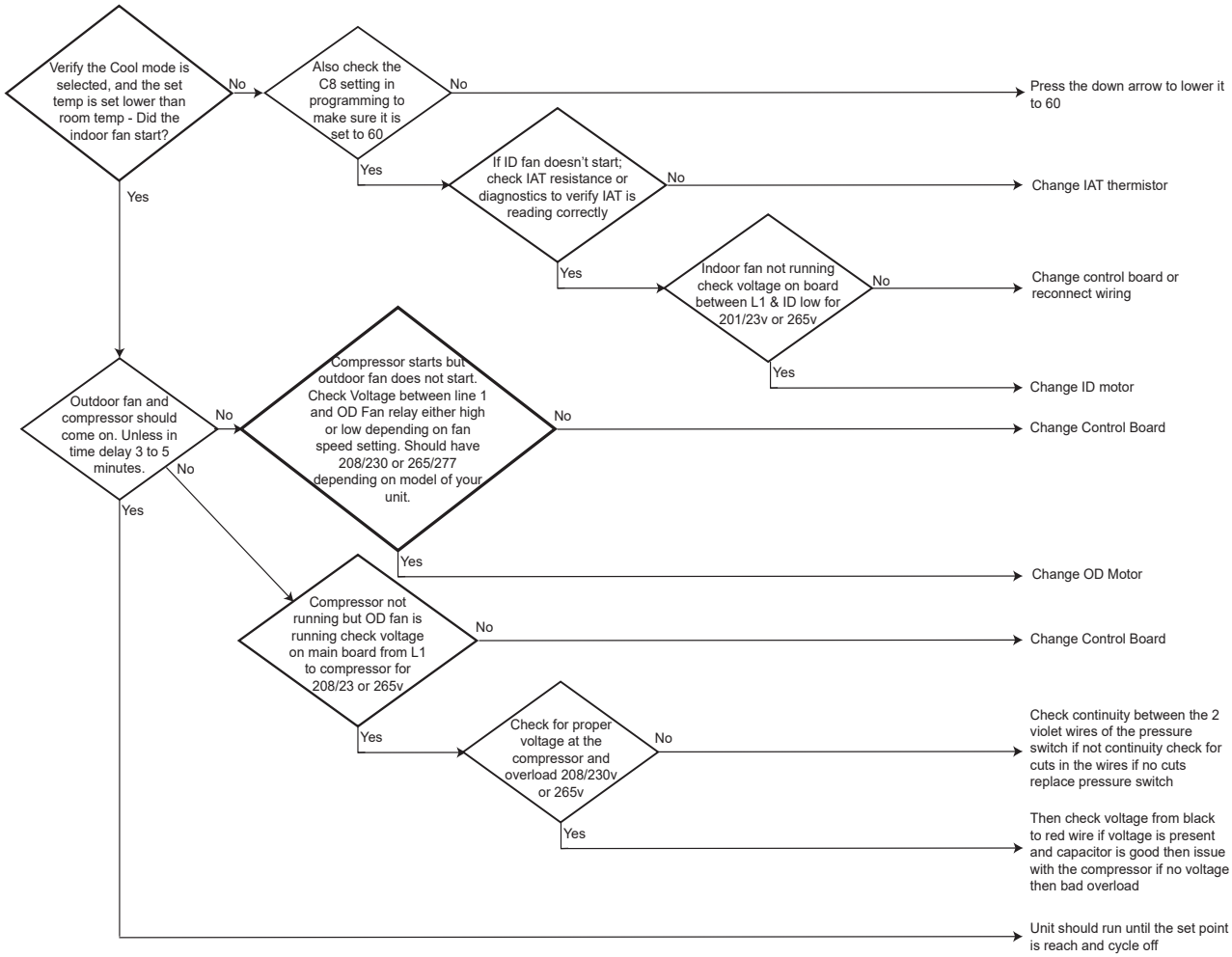
Verify the Cool mode is selected, and the set temp is set lower than room temp - Did the indoor fan start?
No
Also check the C8 setting in programming to make sure it is set to 60
No
Press the down arrow to lower it to 60
Yes
If ID fan doesn't start; check IAT resistance or diagnostics to verify IAT is reading correctly
No
Change IAT thermistor
Yes
Indoor fan not running check voltage on board between L1 & ID low for 201/23v or 265v
No
Change control board or reconnect wiring
Yes
Change ID motor
Yes
Outdoor fan and compressor should come on. Unless in time delay 3 to 5 minutes.
No
Compressor starts but outdoor fan does not start. Check Voltage between line 1 and OD Fan relay either high or low depending on fan speed setting. Should have 208/230 or 265/277 depending on model of your unit.
No
Change Control Board
No
Yes
Yes
Change OD Motor
Compressor not running but OD fan is running check voltage on main board from L1 to compressor for 208/23 or 265v
No
Change Control Board
Yes
Check for proper voltage at the compressor and overload 208/230v or 265v
No
Check continuity between the 2 violet wires of the pressure switch if not continuity check for cuts in the wires if no cuts replace pressure switch
Yes
Then check voltage from black to red wire if voltage is present and capacitor is good then issue with the compressor if no voltage then bad overload
Unit should run until the set point is reach and cycle off

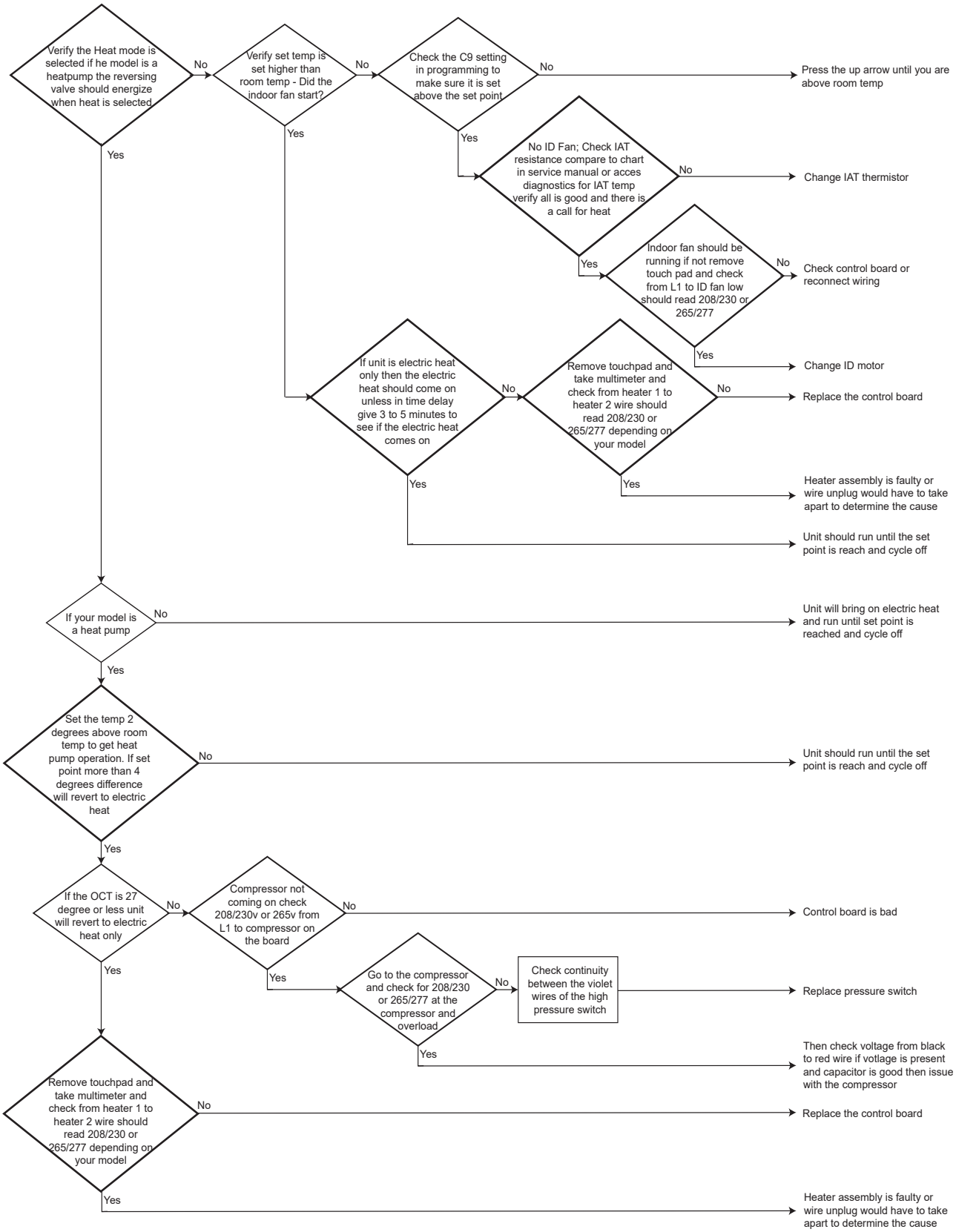
Verify the Heat mode is selected if he model is a heatpump the reversing valve should energize when heat is selected
No
Verify set temp is set higher than room temp - Did the indoor fan start?
No
Check the C9 setting in programming to make sure it is set above the set point
No
Press the up arrow until you are above room temp
Yes
Yes
No ID Fan; Check IAT resistance compare to chart in service manual or acces diagnostics for IAT temp verify all is good and there is a call for heat
No
Change IAT thermistor
Yes
Indoor fan should be running if not remove touch pad and check from L1 to ID fan low should read 208/230 or 265/277
No
Check control board or reconnect wiring
Yes
Change ID motor
If unit is electric heat only then the electric heat should come on unless in time delay give 3 to 5 minutes to see if the electric heat comes on
No
Remove touchpad and take multimeter and check from heater 1 to heater 2 wire should read 208/230 or 265/277 depending on your model
No
Replace the control board
Yes
Yes
Heater assembly is faulty or wire unplug would have to take apart to determine the cause
Unit should run until the set point is reach and cycle off
If your model is a heat pump
No
Unit will bring on electric heat and run until set point is reached and cycle off
Yes
Set the temp 2 degrees above room temp to get heat pump operation. If set point more than 4 degrees difference will revert to electric heat
No
Unit should run until the set point is reach and cycle off
Yes
If the OCT is 27 degree or less unit will revert to electric heat only
No
Compressor not coming on check 208/230v or 265v from L1 to compressor on the board
No
Control board is bad
Yes
Yes
Go to the compressor and check for 208/230 or 265/277 at the compressor and overload
No
Check continuity between the violet wires of the high pressure switch
Replace pressure switch
Yes
Then check voltage from black to red wire if votlage is present and capacitor is good then issue with the compressor
Remove touchpad and take multimeter and check from heater 1 to heater 2 wire should read 208/230 or 265/277 depending on your model
No
Replace the control board
Yes
Heater assembly is faulty or wire unplug would have to take apart to determine the cause

Error Code:
br - Brown out protection

Applicable Models:
All PTAC models

Method of Error Detection:
br will display

Error Decision Conditions:
Voltage from the transformer to low voltage input on board is 0v or 12v to 14v

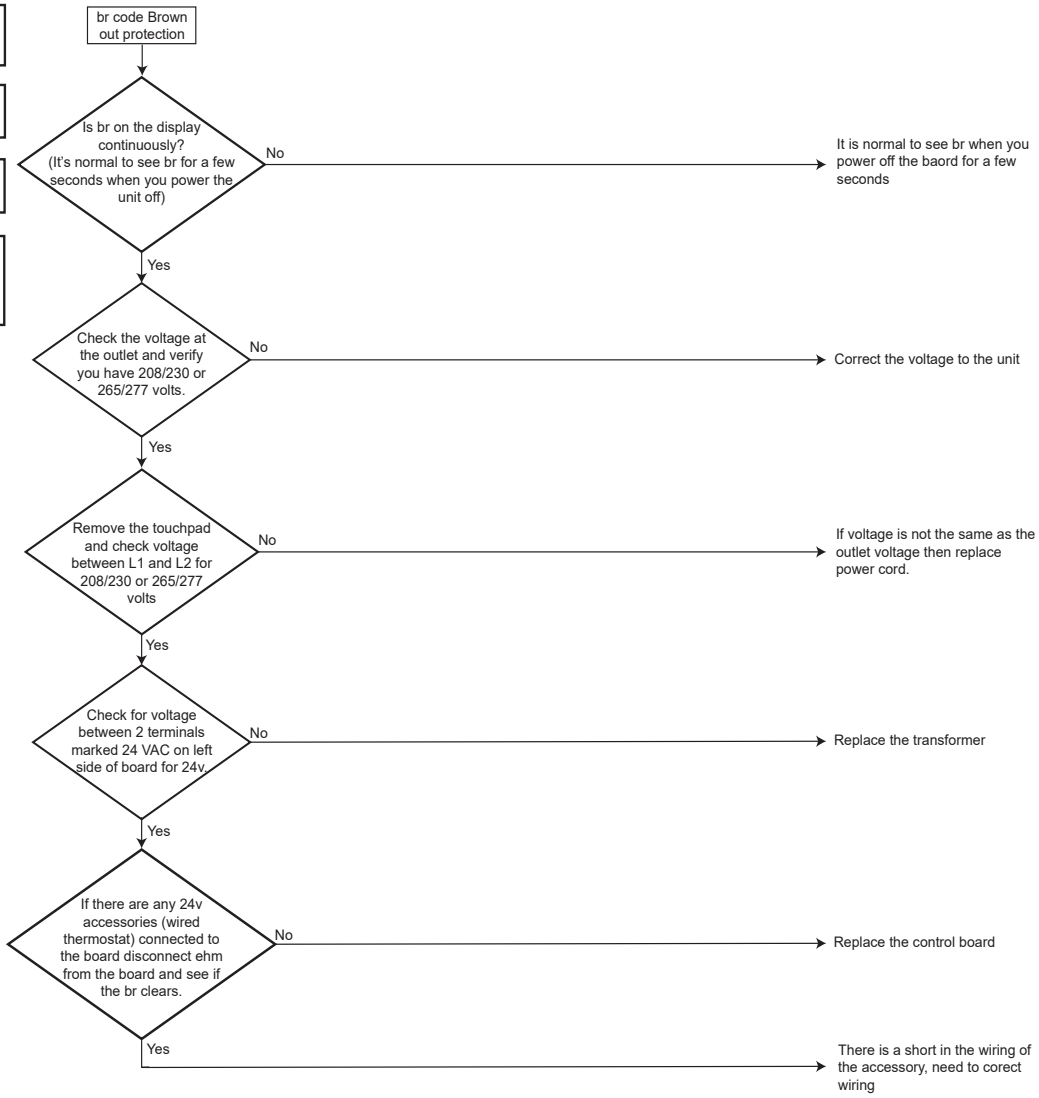

Error Code:
C3 - Indoor coil issues

C4 - Indoor coil issues

L3 - Indoor coil issues

Applicable Models:
All models

Method of Error Detection:
Indoor coil icing or frozen

Error Decision Conditions:
Refrigerant issue, cap tube restriction or thermister reading out of range.

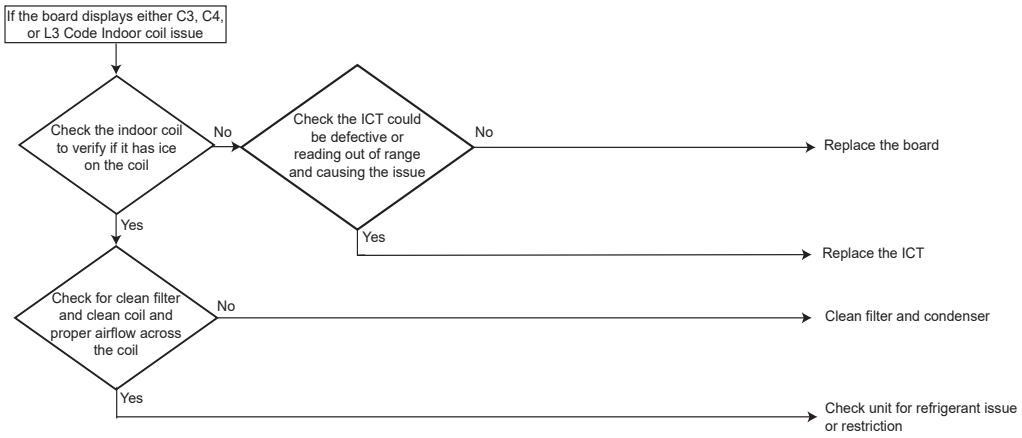

Error Code:
C7 - Indoor coil frozen or failed indoor coil themistor

Applicable Models:
All PTAC models

Method of Error Detection:
C7 will display indoor coil is frozen over

Error Decision Conditions:
Indoor coil thermistor is reading less than 32" in diagnostics mode

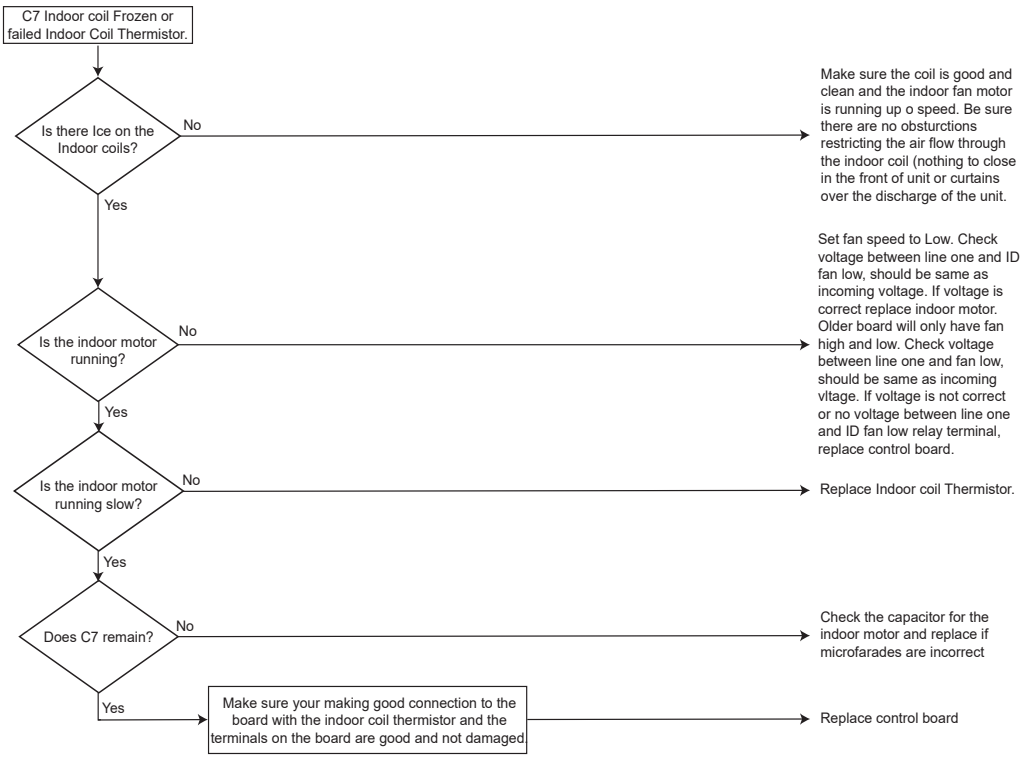

Error Code:
d4 - Communication loss to DC board

Applicable Models:
PMH**, PMC**, HEH** and HEC** models

Method of Error Detection:
Ensure all harness connections are connected correctly

Error Decision Conditions:
wiring not connected voltage not going through the harness

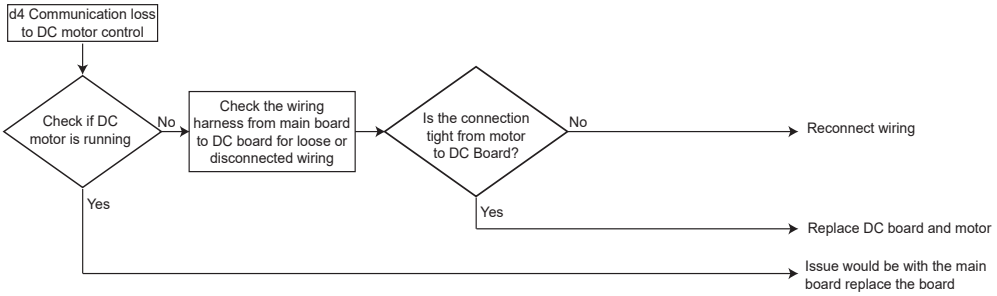

Error Code:
d5 - Outdoor DC motor not running

Applicable Models:
PMH**, PMC**, HEH**, HEC**

Method of Error Detection:
Check wire harness connections from main board to outdoor DC board

Error Decision Conditions:
No voltage to outdoor motor from DC board

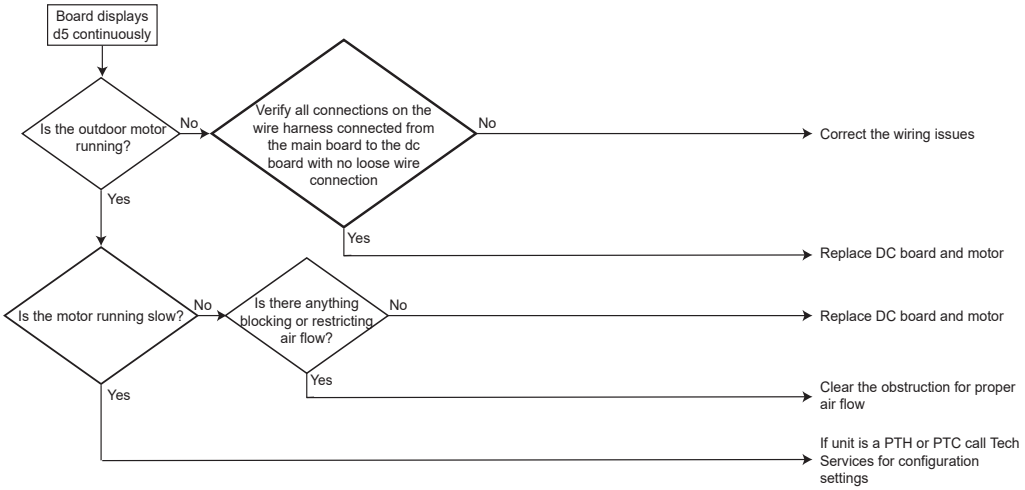

Error Code:
Ec - Incorrect configuration

Applicable Models:
PMH**& PMC**

Method of Error Detection:
Incorrect configuration

Error Decision Conditions:
Incorrect configuration

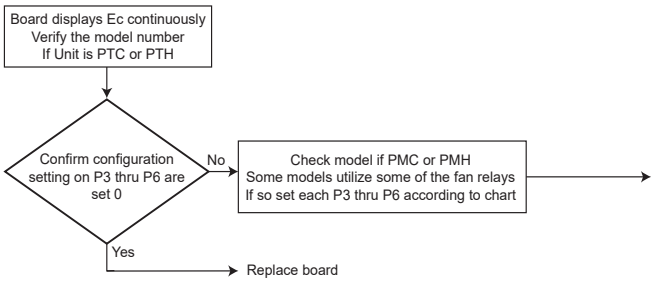

ID Fan Relay Kit Usage		
Configuration Code	Option	Setting
P3	PSC Fan Motor	0
P3	DigiAir Vent Kit Fan	1
P3	Power Vent/ Smart Vent/ Economizer/ Economizer Plus 3 (w/PO configuration)	3
P3	Lighting Control Kit	4
P3	Transfer Fan Kit	5
P3	Condensate Pump Kit	6

ID High Fan Relay Kit Usuage		
Configuration Code	Option	Setting
P4	PSC Fan Motor	0
P4	DigiAir Vent Kit Fan	2
P4	Power Vent/ Smart Vent/ Economizer/ Economizer Plus 3 (w/PO configuration)	3
P4	Lighting Control Kit	4
P4	Transfer Fan Kit	5
P4	Condensate Pump Kit	6

OD Low Fan Relay Kit Usage		
Configuration Code	Option	Setting
P5	PSC Fan Motor	0
P5	Power Vent/ Smart Vent/ Economizer/ Economizer Plus 3 (w/PO configuration)	3
P5	Lighting Control Kit	4
P5	Transfer Fan Kit	5
P5	Condensate Pump Kit	6

OD High Fan Relay Kit Usage		
Configuration Code	Option	Setting
P6	PSC Fan Motor	0
P6	Power Vent/ Smart Vent/ Economizer/ Economizer Plus 3 (w/PO configuration)	3
P6	Lighting Control Kit	4
P6	Transfer Fan Kit	5

Error Code:
F1 - Indoor ambient thermostor error

Applicable Models:
All PTAC models

Method of Error Detection:
Is thermistor plugged into the board. Check indoor ambient thermistor resistance.

Error Decision Conditions:
Open or short circuit of the IAT

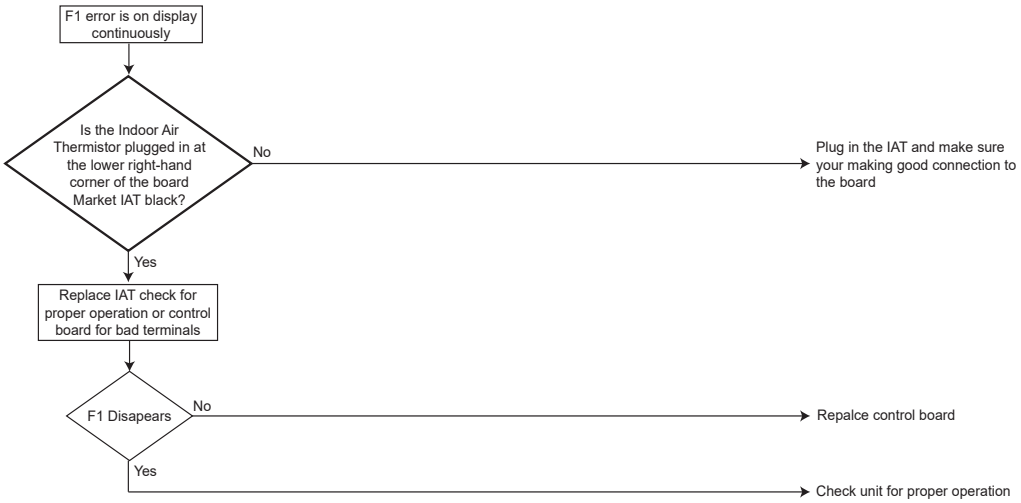

Error Code:
F3 - Indoor ambient thermistor error

Applicable Models:
All PTAC models

Method of Error Detection:
Check thermistor resistance

Error Decision Conditions:
IAT <-20, or >200 or open, or shorted

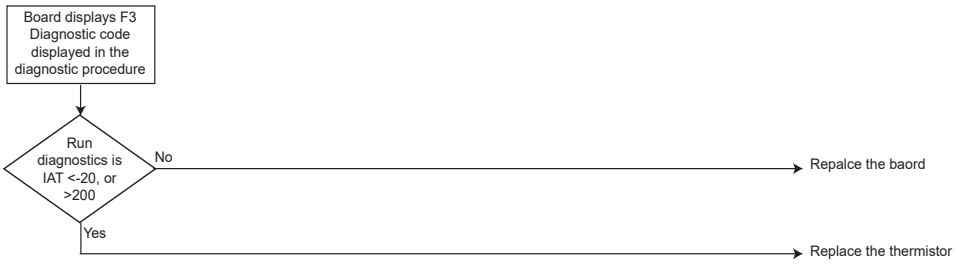

Error Code:
F4 - Indoor coil thermistor error

Applicable Models:
All PTAC models

Method of Error Detection:
Check the resistance of the thermistor

Error Decision Conditions:
ICT<-20, or >200, open or shorted

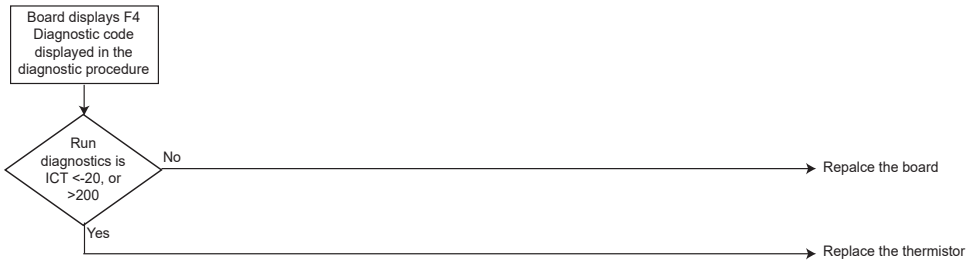

Error Code:
F5 - DS01* signal loss

Applicable Models:
All PTAC models

Method of Error Detection:
Check antenna to ensure harness is plugged into board. Is thermostat bound to board.

Error Decision Conditions:
Wireless thermostat is not bound to board

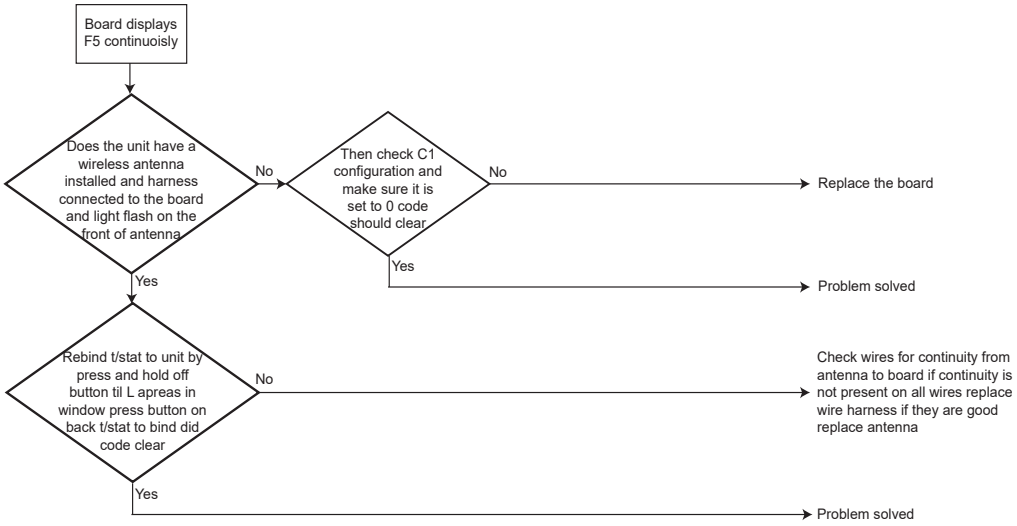

Error Code:
F6 - Indoor discharge thermistor error

Applicable Models:
All PTAC models

Method of Error Detection:
Check the thermistor resistance

Error Decision Conditions:
IDT <-20 or >233, or open, or shorted

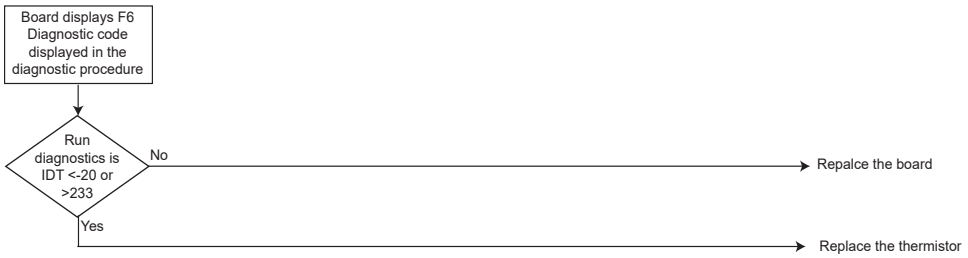

Error Code:
F7 - Outdoor coil thermistor error

Applicable Models:
All PTAC models

Method of Error Detection:
Check the thermistor

Error Decision Conditions:
OCT <-20 or >200, or open, or shorted

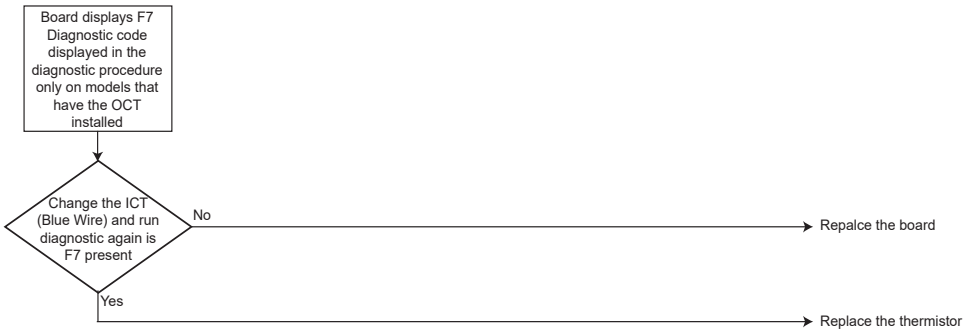

Error Code:
HI - High voltage lock out

Applicable Models:
All PTAC models

Method of Error Detection:
Check voltage from low side of transformer 24v-32v

Error Decision Conditions:
Voltage is over 32v

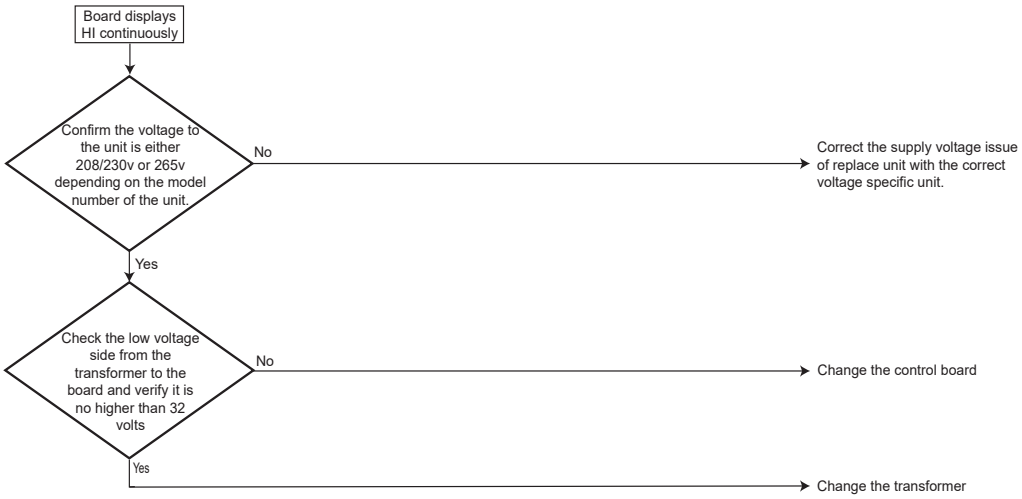

WIRING DIAGRAMS

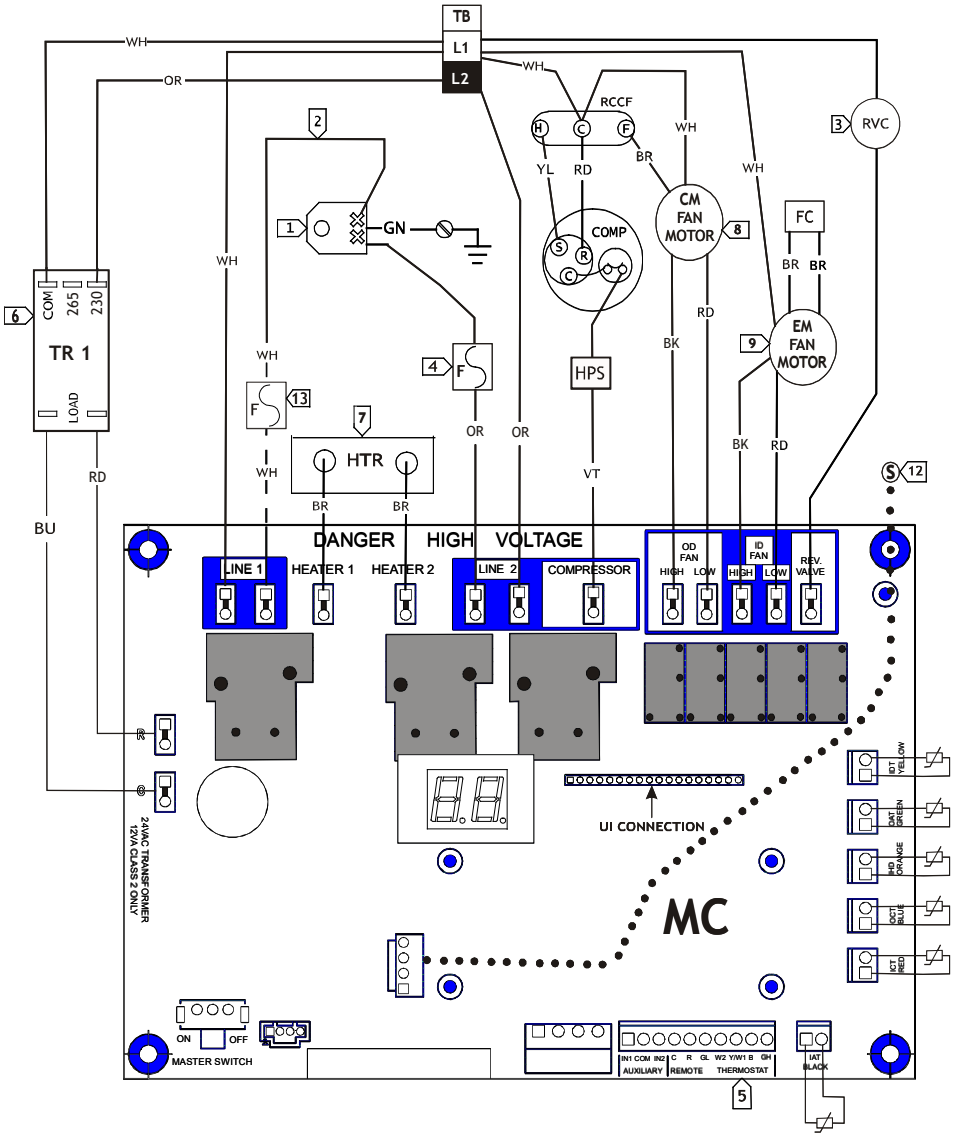

REMOTE THERMOSTAT OPERATION	
COOLING UNIT W/ELECTRIC HEAT	
FUNCTION	CONNECT R TO:
OFF	-----
FAN	G **
COOL	G, Y/W1
HEAT	G, W2 OR G,B,Y/W1*
HEAT PUMP W/AUXILIARY ELECTRIC HEAT	
FUNCTION	CONNECT R TO:
OFF	-----
FAN	G**
COOL	G, Y/W1
1ST STAGE HEAT	G,B,Y/W1
2ND STAGE HEAT	G, W2

* FOR A HEAT PUMP THERMOSTAT USED ON A STRAIGHT COOL UNIT.
** GL - LOW SPEED
GH - HIGH SPEED

NOTES :

1. WARNING: DISCONNECT POWER BEFORE SERVICING. WIRING TO UNIT MUST BE PROPERLY POLARIZED (FOR 265V) AND GROUNDED.
2. WHITE WIRE MUST BE CONNECTED AS SHOWN.
3. ON HEAT PUMP MODELS ONLY.
4. "OR" ON LINE 2 WITH FUSE SHOWN CONNECTED FOR 265V. OPTIONAL FOR 230V & 115 V, CONNECT POWER CORD TO LINE 2.
5. FOR REMOTE OPERATION, SEE CONFIGURATION CHART.
6. IF SUPPLY VOLTAGE IS 208V/230V, USE THE 230V OR 240V TAP ON TRANSFORMER. IF SUPPLY VOLTAGE IS 265V, USE THE 265V TAP ON TRANSFORMER. 115V TRANSFORMER NOT SHOWN.
7. SEE OPTIONAL HYDRONIC HEAT DIAGRAM FOR HOT WATER STEAM HEAT.
8. SEE ALTERNATE WIRING FOR DC OUTDOOR MOTORS.
9. SEE ALTERNATE WIRING FOR DC INDOOR MOTORS.
10. SEE TABLE FOR OUTDOOR MOTOR SPEED SELECTION.
11. SEE TABLE FOR INDOOR MOTOR SPEED SELECTION.
12. SEE OPTIONAL WIRING DIAGRAMS FOR SERIAL CABLE CONNECTIONS.
13. OPTIONAL FOR 208/230V.
14. SET DIP SWITCHES PER TABLE.

CM	OUTDOOR FAN MOTOR
COMP	COMPRESSOR
DB	DAUGHTER BOARD
EM	EVAPORATOR MOTOR
FC	FAN CAPACITOR
F	FUSE
HPS	HIGH PRESSURE SWITCH
HTR	HEATER ELEMENT
MC	MAIN CONTROL
R	RELAY
RCCF	RUN CAPACITOR FOR COMPRESSOR AND FAN
RVC	REVERSING VALVE
TR	TRANSFORMER
TB	TERMINAL BLOCK
VSM	VARIABLE SPEED MOTOR
VSTM	VARIABLE SPEED TERMINAL BOARD

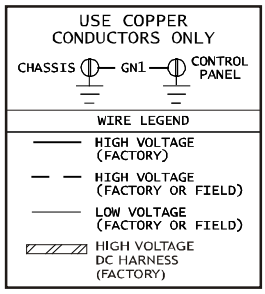

Wiring is subject to change. Always refer to the wiring diagram on the unit for the most up-to-date wiring.

WIRING DIAGRAMS

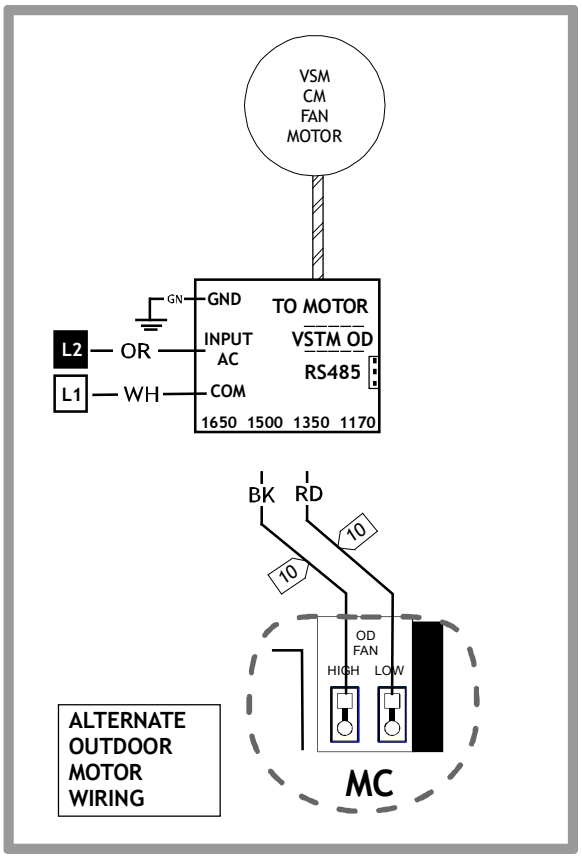

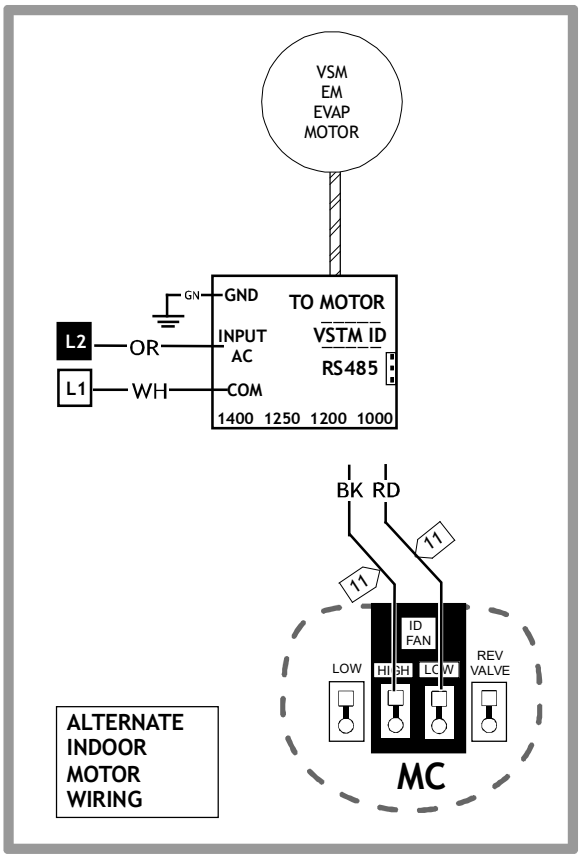

WARNING

HIGH VOLTAGE!
DISCONNECT ALL POWER BEFORE SERVICING OR INSTALLING THIS UNIT. MULTIPLE POWER SOURCES MAY BE PRESENT. FAILURE TO DO SO MAY CAUSE PROPERTY DAMAGE, PERSONAL INJURY OR DEATH.

Wiring is subject to change. Always refer to the wiring diagram on the unit for the most up-to-date wiring.

WIRING DIAGRAMS

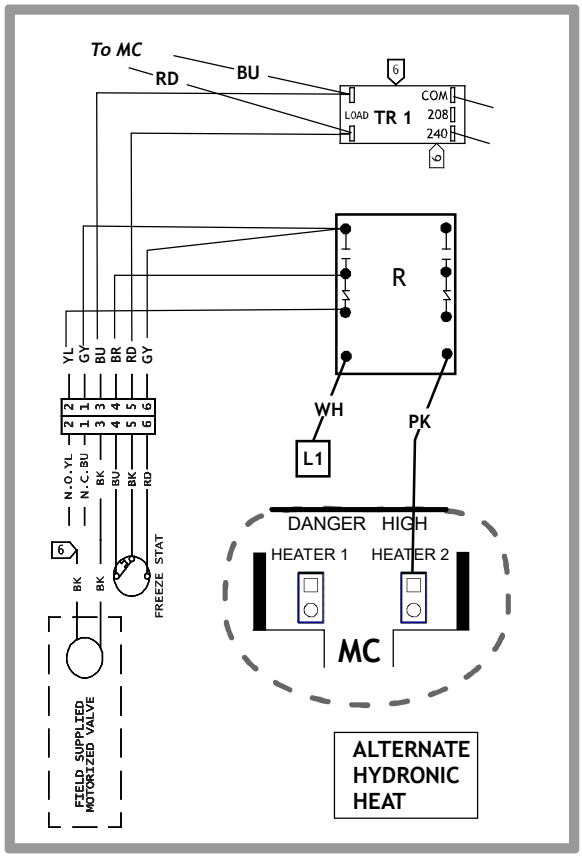

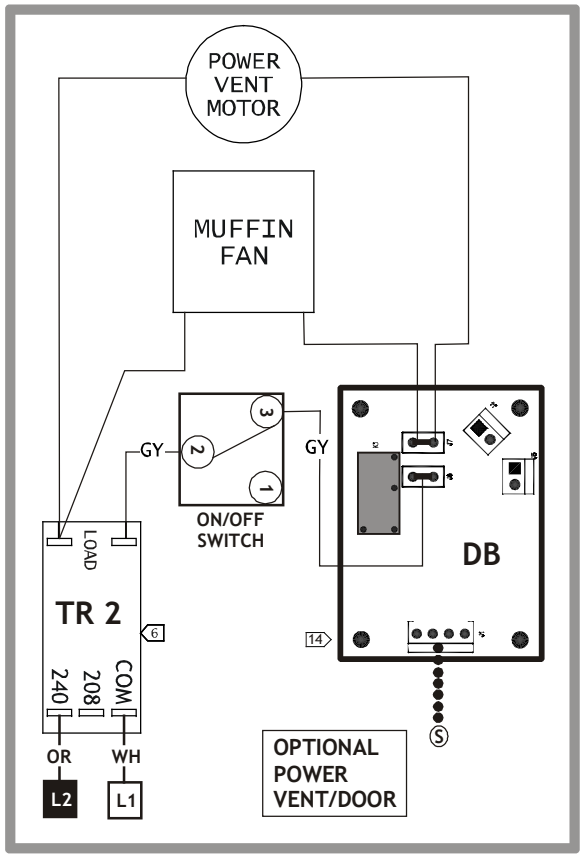

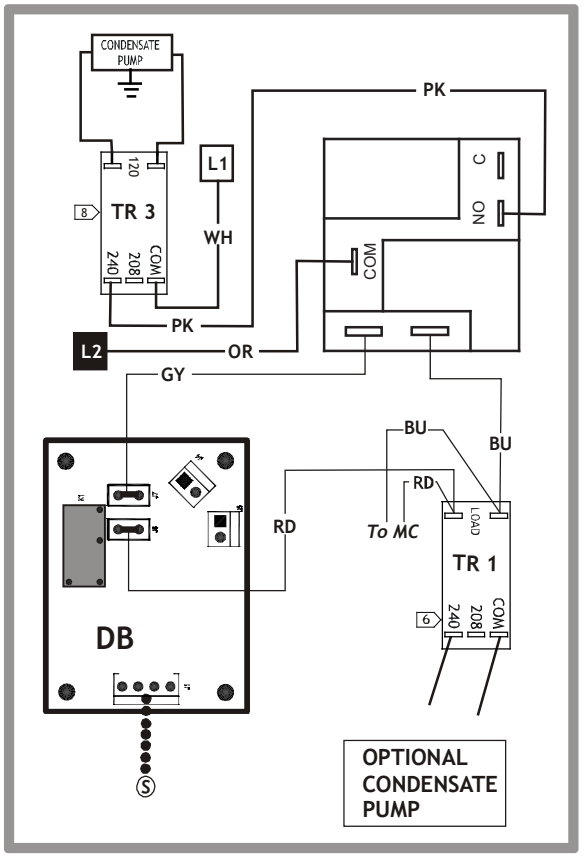

Wiring is subject to change. Always refer to the wiring diagram on the unit for the most up-to-date wiring.

WIRING DIAGRAMS

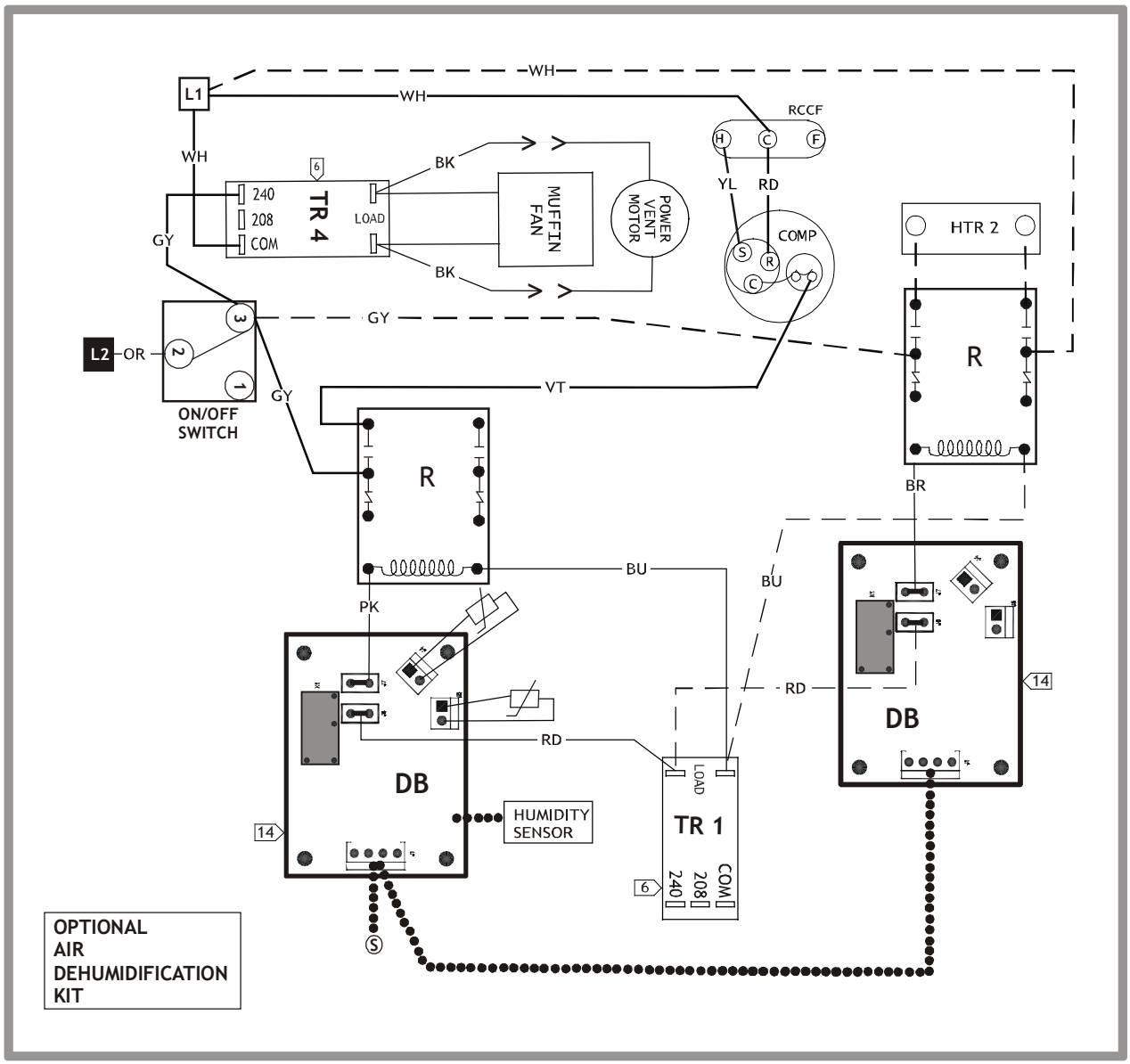

Wiring is subject to change. Always refer to the wiring diagram on the unit for the most up-to-date wiring.

WIRING DIAGRAMS

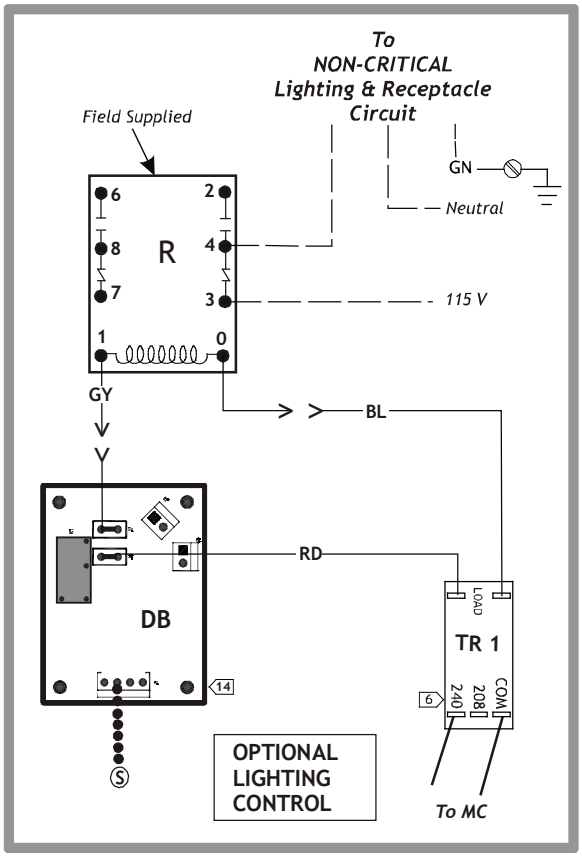

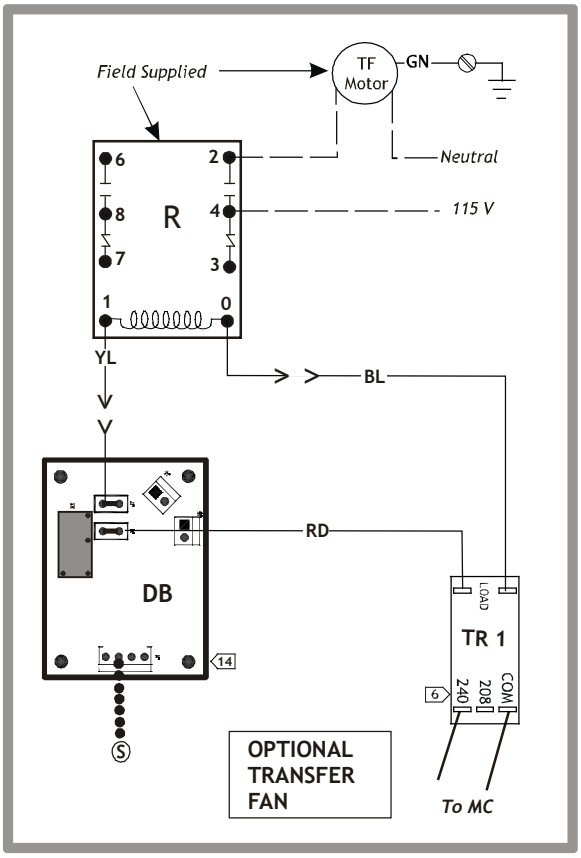

14

Daughter Board Device	Switch 1	Switch 2	Switch 3	Switch 4	Switch 5
Small Vent	0	0	0	0	1
Power Door / Vent	0	0	1	0	0
Transfer Fan	0	0	1	0	0
Condensate Pump	0	0	1	0	1
Lighting Control	0	1	0	0	0
DigiAIR™ Vent Compressor	0	1	0	0	1
DigiAIR™ Kit Heater	0	1	0	1	0

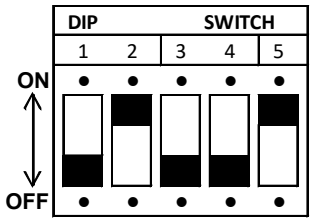

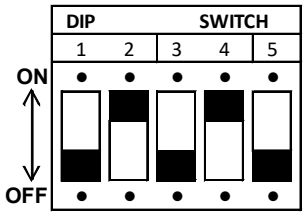

Wiring is subject to change. Always refer to the wiring diagram on the unit for the most up-to-date wiring.

WIRING DIAGRAMS

LEGEND for wiring diagram on following page

WARNING

HIGH VOLTAGE!
DISCONNECT ALL POWER BEFORE SERVICING OR INSTALLING THIS UNIT. MULTIPLE POWER SOURCES MAY BE PRESENT. FAILURE TO DO SO MAY CAUSE PROPERTY DAMAGE, PERSONAL INJURY OR DEATH.

REMOTE THERMOSTAT OPERATION	
COOLING UNIT W/ELECTRIC HEAT	
FUNCTION	CONNECT R TO:
OFF	-----
FAN	G **
COOL	G, Y/W1
HEAT	G, W2 OR G,B,Y/W1*
HEAT PUMP W/AUXILIARY ELECTRIC HEAT	
FUNCTION	CONNECT R TO:
OFF	-----
FAN	G**
COOL	G, Y/W1
1ST STAGE HEAT	G,B,Y/W1
2ND STAGE HEAT	G, W2

* FOR A HEAT PUMP THERMOSTAT USED ON A STRAIGHT COOL UNIT.
** GL - LOW SPEED
GH - HIGH SPEED

CM	OUTDOOR FAN MOTOR
COMP	COMPRESSOR
DB	DAUGHTER BOARD
EM	EVAPORATOR MOTOR
FC	FAN CAPACITOR
F	FUSE
HPS	HIGH PRESSURE SWITCH
HTR	HEATER ELEMENT
MC	MAIN CONTROL
R	RELAY
RCCF	RUN CAPACITOR FOR COMPRESSOR AND FAN
RVC	REVERSING VALVE
TR	TRANSFORMER
TB	TERMINAL BLOCK
VSM	VARIABLE SPEED MOTOR
VSTM	VARIABLE SPEED TERMINAL BOARD

NOTES :

1. WARNING: DISCONNECT POWER BEFORE SERVICING. WIRING TO UNIT MUST BE PROPERLY POLARIZED (FOR 265V) AND GROUNDED.
2. WHITE WIRE MUST BE CONNECTED AS SHOWN.
3. ON HEAT PUMP MODELS ONLY.
4. "OR" ON LINE 2 WITH FUSE SHOWN CONNECTED FOR 265V. OPTIONAL FOR 230V & 115 V, CONNECT POWER CORD TO LINE 2.
5. FOR REMOTE OPERATION, SEE CONFIGURATION CHART.
6. IF SUPPLY VOLTAGE IS 208V/230V, USE THE 230V OR 240V TAP ON TRANSFORMER. IF SUPPLY VOLTAGE IS 265V, USE THE 265V TAP ON TRANSFORMER. 115V TRANSFORMER NOT SHOWN.
7. SEE OPTIONAL HYDRONIC HEAT DIAGRAM FOR HOT WATER STEAM HEAT.
8. SEE ALTERNATE WIRING FOR DC OUTDOOR MOTORS.
9. SEE ALTERNATE WIRING FOR DC INDOOR MOTORS.
10. SEE TABLE FOR OUTDOOR MOTOR SPEED SELECTION.
11. SEE TABLE FOR INDOOR MOTOR SPEED SELECTION.
12. SEE OPTIONAL WIRING DIAGRAMS FOR SERIAL CABLE CONNECTIONS.
13. OPTIONAL FOR 208/230V.
14. SET DIP SWITCHES PER TABLE.

USE COPPER CONDUCTORS ONLY

CHASSIS — GN1 — CONTROL PANEL

WIRE LEGEND

- HIGH VOLTAGE (FACTORY)
- HIGH VOLTAGE (FACTORY OR FIELD)
- LOW VOLTAGE (FACTORY OR FIELD)
- HIGH VOLTAGE DC HARNESS (FACTORY)

Wiring is subject to change. Always refer to the wiring diagram on the unit for the most up-to-date wiring.

WIRING DIAGRAMS

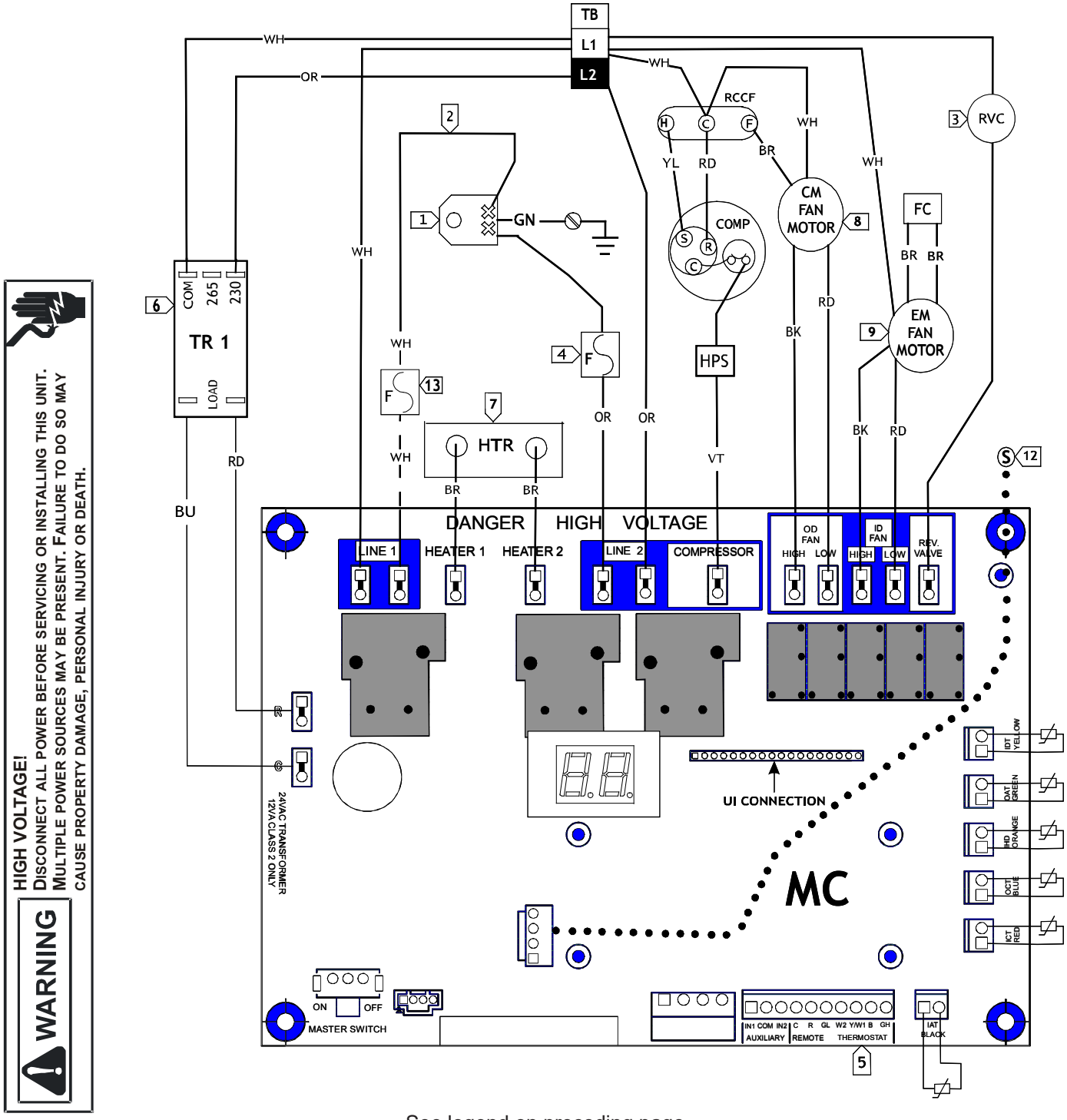

See legend on preceding page.

Wiring is subject to change. Always refer to the wiring diagram on the unit for the most up-to-date wiring.

WIRING DIAGRAMS

TYPE A WITH SPEED TABS

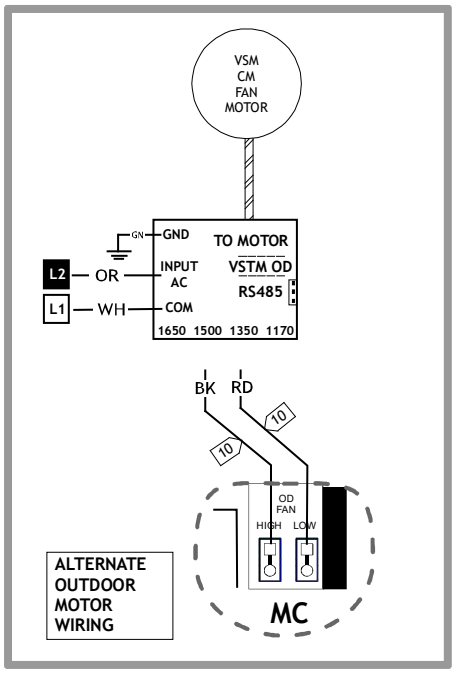

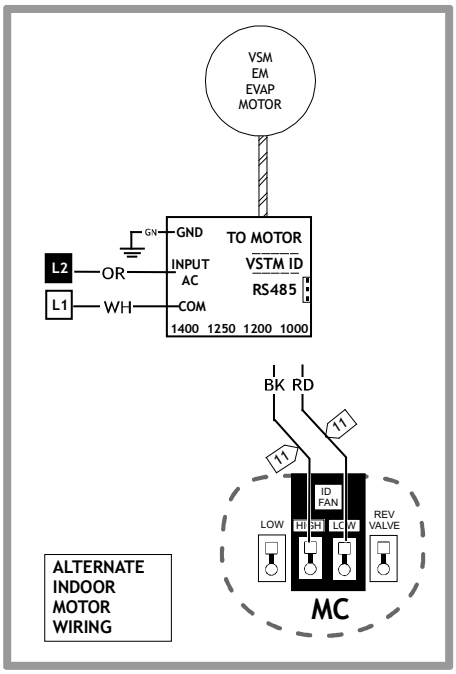

WARNING

HIGH VOLTAGE!
DISCONNECT ALL POWER BEFORE SERVICING OR INSTALLING THIS UNIT. MULTIPLE POWER SOURCES MAY BE PRESENT. FAILURE TO DO SO MAY CAUSE PROPERTY DAMAGE, PERSONAL INJURY OR DEATH.

TYPE B WITHOUT SPEED TABS

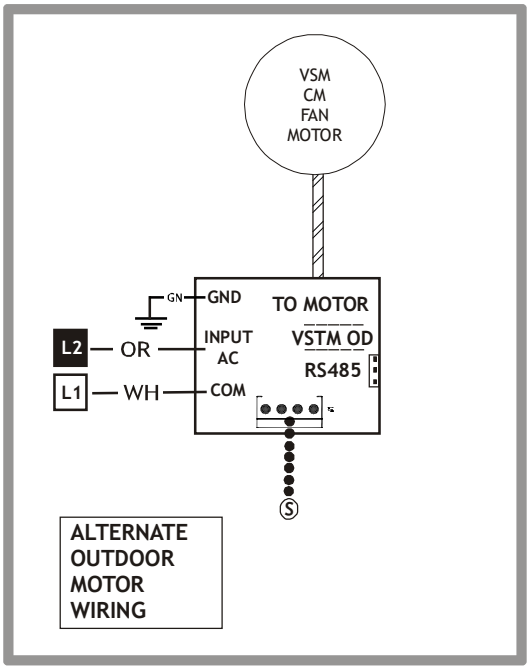

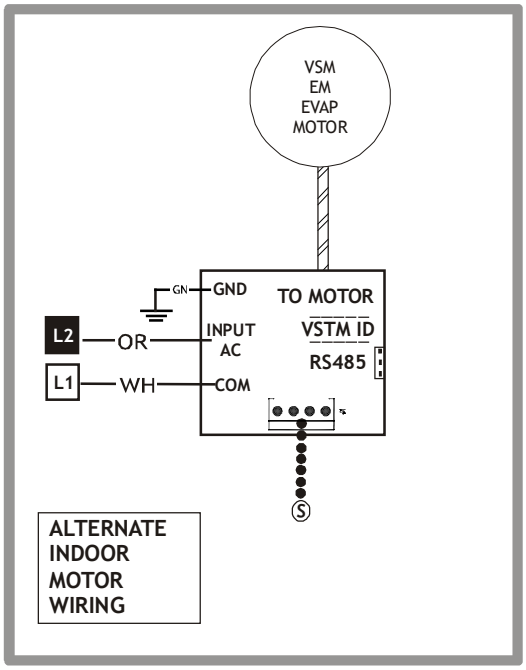

Wiring is subject to change. Always refer to the wiring diagram on the unit for the most up-to-date wiring.

WIRING DIAGRAMS

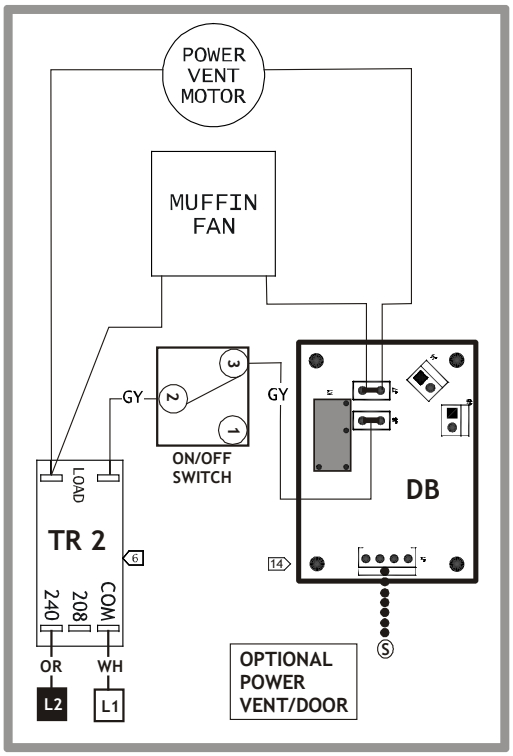

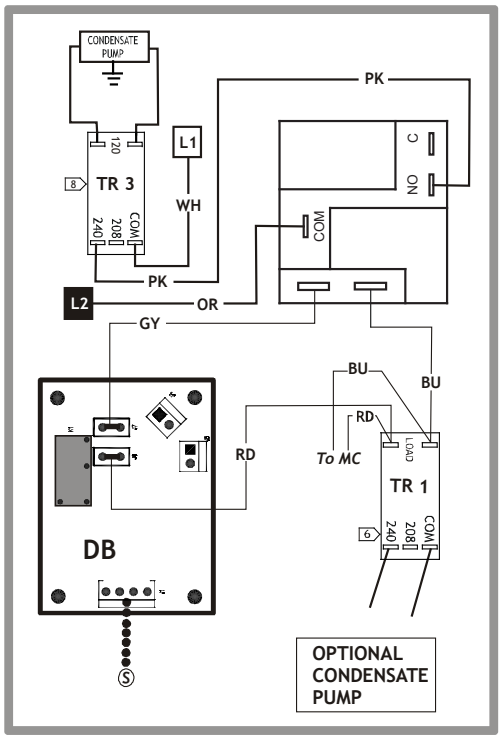

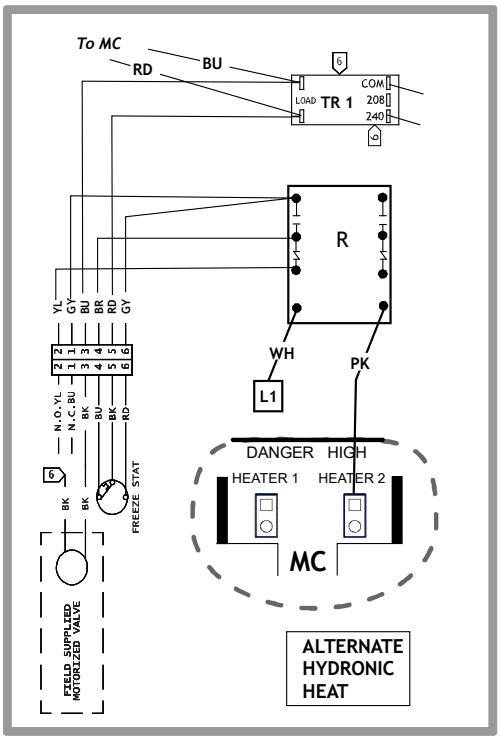

Wiring is subject to change. Always refer to the wiring diagram on the unit for the most up-to-date wiring.

WIRING DIAGRAMS

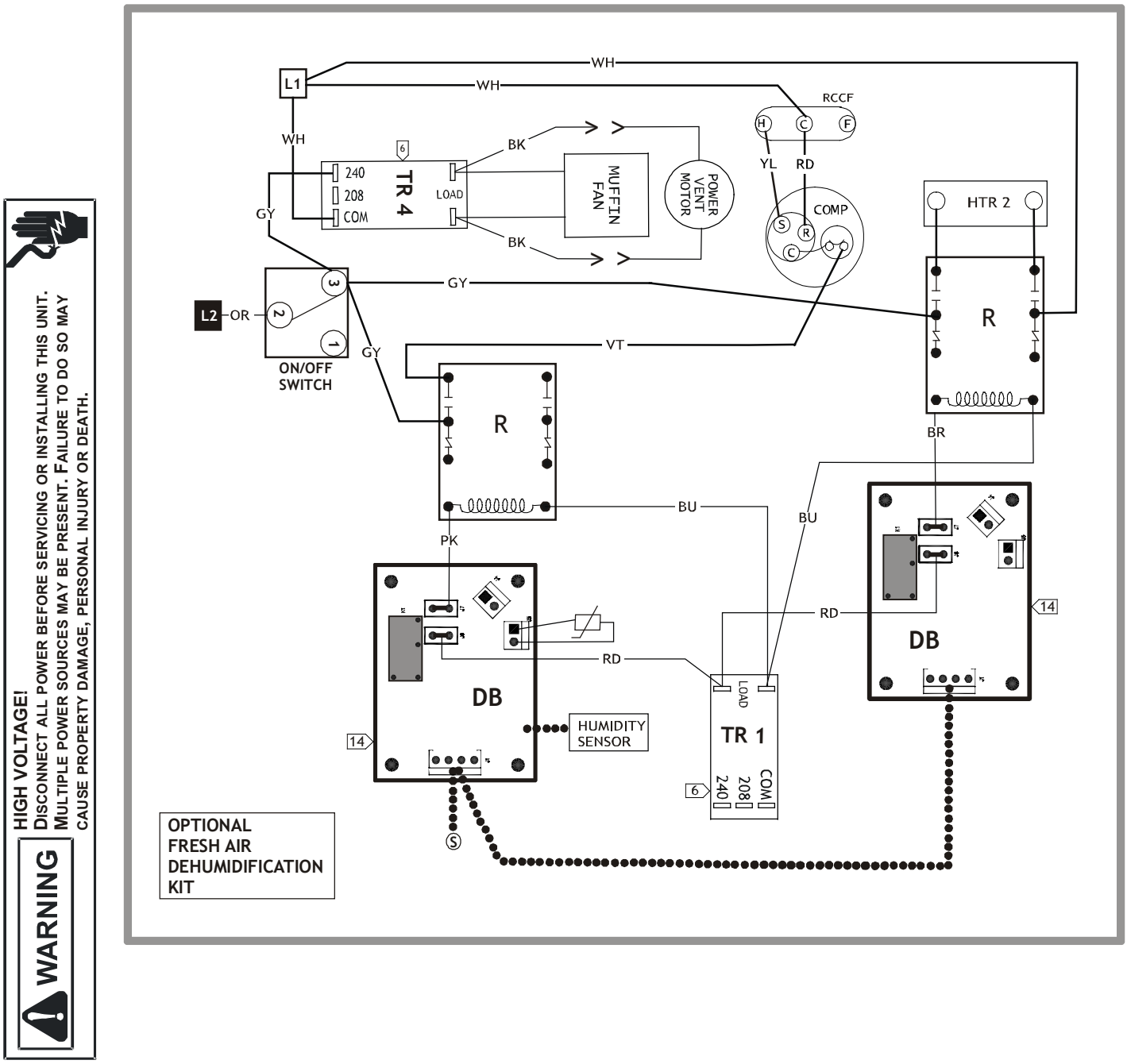

Wiring is subject to change. Always refer to the wiring diagram on the unit for the most up-to-date wiring.

WIRING DIAGRAMS

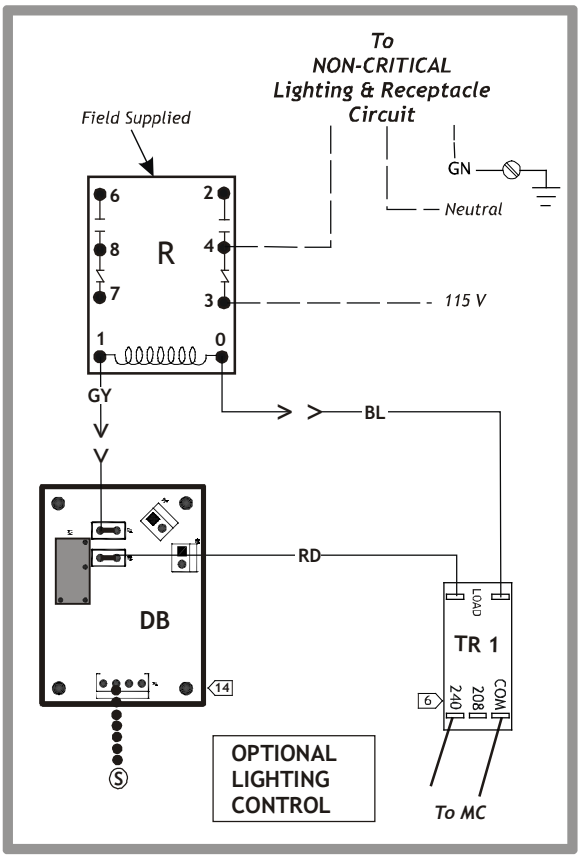

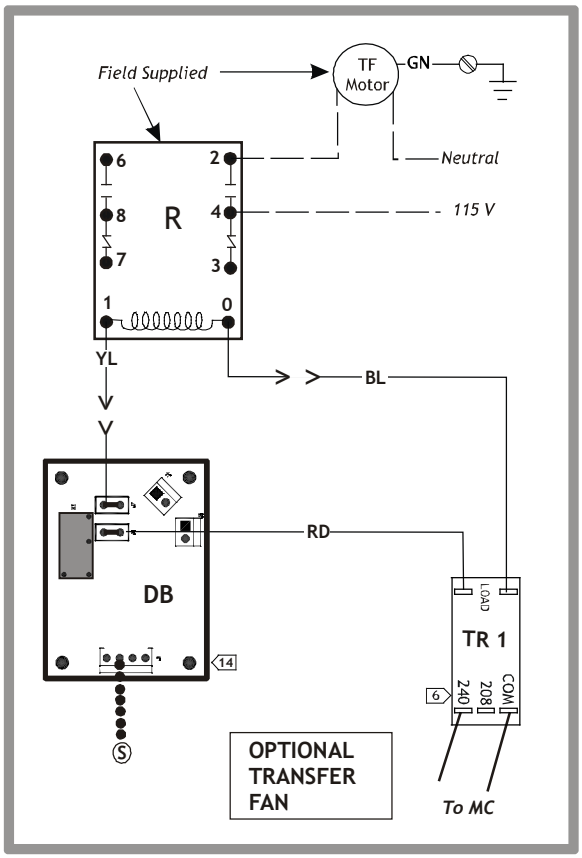

Wiring is subject to change. Always refer to the wiring diagram on the unit for the most up-to-date wiring.

10

Outdoor Motor Speed Selection		
Model Starts With	High Speed VSTM Tap (Black Wire)	Low Speed VSTM Tap (Red Wire)
DRY093/DRY094	1350	1170
PTC173	1650	1450
HEC073/PTH073/PTH074	1350	1170
HEC093/PTH093/PTH094	1350	1170
HEC123/PTH123/PTH124	1500	1350
PTH153/PTH154	1650	1500
PMH153/PMH154	1650	1500
PTC073/PTC074	1350	1170
PTC093/PTC094	1350	1170
PTC123/PTC124	1350	1170
PTC153/PTC154	1650	1500

11

Indoor Motor Speed Selection		
Model Starts With	High Speed VSTM Tap (Black Wire)	Low Speed VSTM Tap (Red Wire)
PTH07*G (00 to 35)	1250	1000
PMH07*G (00 to 35)	1250	1000
PMC07*G (00 to 35)	1250	1000
PMC09*G (00 to 35)	1250	1000
PMC12*G (00 to 35)	1250	1000
PTC072G/PMH074/PTH073H/PTH074H (00 to 35)	1250	1000
PTC092G/PMH094/PTH093H/PTH094H (00 to 35)	1250	1000
PMH124/PTH123H/PTH124H (00 to 35)	1250	1000
PTH153H/PTH154H (00 to 35)	1400	1250
PMC154/PMH153G/PMH154G (00 to 35)	1400	1250

14

Daughter Board Device	Switch 1	Switch 2	Switch 3	Switch 4	Switch 5
Small Vent	0	0	0	0	1
Power Door / Vent	0	0	1	0	0
Transfer Fan	0	0	1	0	0
Condensate Pump	0	0	1	0	1
Lighting Control	0	1	0	0	0
DigiAIR™ Vent Compressor	0	1	0	0	1
DigiAIR™ Kit Heater	0	1	0	1	0

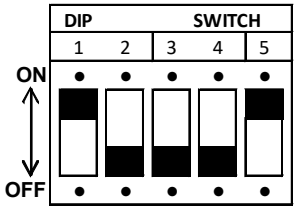

PTAC
Amana Heating & Air Conditioning
PROUDLY
ASSEMBLED IN
THE USA FOR OVER
40
YEARS