REPAIR PARTS

GSZB40 Remote Air Conditioner

GSZB401810AA
GSZB402410AA
GSZB403010AA
GSZB403610AA
GSZB404210AA
GSZB404810AA
GSZB406010AA

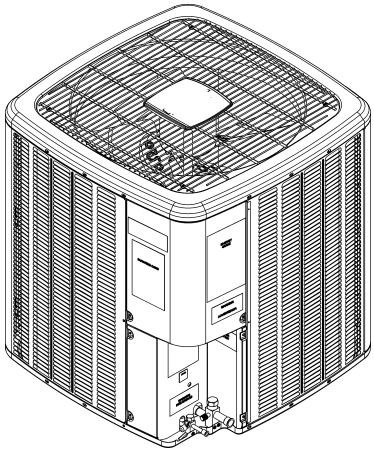

This manual is to be used by qualified technicians only.

© 2022-2023 Goodman Manufacturing Company, L.P. ◊ 19001 Kermier Rd. ◊ Waller, TX 77484

Important Information

Index

Functional Parts List 3

Illustration and Parts ..... 4 - 9

Views shown are for parts illustrations only, not servicing procedures.

Text Codes:

AR - As Required
NA - Not Available
NS - Not Shown
00000000 - See Note
QTY - Quantity Example (QTY 3) (If Quantity not shown, Quantity = 1)
M - Model Example (M1) (If M Code not shown, then part is used on all Models)

Expanded Model Nomenclature:

Example
M1 - Model#1
M2 - Model#2
M3 - Model#3

Goodman Manufacturing Company, L.P. is not responsible for personal injury or property damage resulting from improper service. Review all service information before beginning repairs.

Warranty service must be performed by an authorized technician, using authorized factory parts. If service is required after the warranty expires, Goodman Manufacturing Company, L.P. also recommends contacting an authorized technician and using authorized factory parts.

Goodman Manufacturing Company, L.P. reserves the right to discontinue, or change at any time, specifications or designs without notice or without incurring obligations.

For assistance within the U.S.A. contact:
Homeowner Support
Goodman Manufacturing Company, L.P.
19001 Kermier Road
Waller, Texas 77484
877-254-4729-Telephone
713-863-2382-Facsimile

For assistance outside the U.S.A. contact:
International Division
Goodman Manufacturing Company, L.P.
19001 Kermier Road
Waller, Texas 77484
713-861-2500-Telephone
713-863-2382-Facsimile

Functional Parts

Part No:	Description:
0151R00231	ADJUSTABLE VALVE, TXV R410A (M7)
0151R00213	ADJUSTABLE VALVE, TXV R410A (M1, M2)
0151R00215	ADJUSTABLE VALVE, TXV R410A (M3)
0151R00216	ADJUSTABLE VALVE, TXV R410A (M4)
0151R00217	ADJUSTABLE VALVE, TXV R410A (M5)
0151R00230	ADJUSTABLE VALVE, TXV R410A (M6)
0151R00185	BASE VALVE 3/4" (M1, M2, M3)
0151R00187	BASE VALVE 3/8"
0151R00186	BASE VALVE 7/8" (M4, M5, M6, M7)
CAB050350440CS	CAP, 5/35 MFD/440V RD - BPRF (M2, M3)
CAB050400440CT	CAP, 5/40 MFD/440V RD - BPRF (M4, M6)
CAB050450440CT	CAP, 5/45 MFD/440V RD - BPRF (M5)
CAB050700440CT	CAP, 5/70 MFD/440V RD - BPRF (M7)
CAP050300440CS	CAP,5/30MFD/440V/DUAL RD (M1)
0130R00116	CAPACITOR HARD START (M1, M2)
ZP25K7EPFV130	COMP, 208/230/60/1 (M3)
50N3829V-ZAKM	COMPRESSOR (M1)
50N4928V-ZAKM	COMPRESSOR (M2)
ZP31K7EPFV130	COMPRESSOR, COPELAND (M4)
ZP34K7EPFV130	COMPRESSOR, COPELAND (M5)
ZP51K7EPFV130	COMPRESSOR, COPELAND (M7)
ZP40K7EPFV130	COMPRESSOR, COPELAND (M6)
CONT1P030024V	CONT, 1 POLE, 30 AMP, 24 VAC
0130M00250	CONTROL, DEFROST (M6, M7)
0130M00723	CONTROL, DEFROST (M1, M2, M3, M4, M5)
0130M00106	DISC THERMOSTAT CRNKCS HTR SW
0130M00349	DISC-THERMOSTAT (M3, M4, M5, M6, M7)
0150M00008	FAN BLADE, 22" TNT2203-25 (M1, M2, M3)
0150M00066	FAN BLADE, 26" (M4, M5, M6, M7)
0163R00007	HEATER, CRANKCASE 230V, 40W (M5, M6, M7)
0163R00006	HEATER, CRANKCASE 230V, 40W (M1, M2, M3, M4)
0131M00807	MOTOR, 1/4HP,1SP,8PL,AL (M5, M6, M7)
0131M00753	MOTOR, 1/6HP, 1SP, 8PL, AL (M1, M2, M3)
0131M00945	MOTOR, 1/6HP, 8PL (M4)
PCBDM133	PCB, DEFROST CONTROL
0130M00851	PREWIRED RELAY HARD START (M1, M2)
0151R00068	REVERSING VALVE (M1, M2, M3)
0151R00071	REVERSING VALVE (M4, M5, M6, M7)
B1225022	SOLENOID COIL
0130M00089	SW-CUTOUT HI PRESS
0130M00088	SW-CUTOUT LOW PRESS

Expanded Model Nomenclature

M1 - GSZB401810AA
M2 - GSZB402410AA
M3 - GSZB403010AA
M4 - GSZB403610AA
M5 - GSZB404210AA
M6 - GSZB404810AA
M7 - GSZB406010AA

SPECIAL PARTS

0161R00092	NAMEPLATE, GOODMAN

Control Panel Assembly

CONTROL PANEL ASSEMBLY

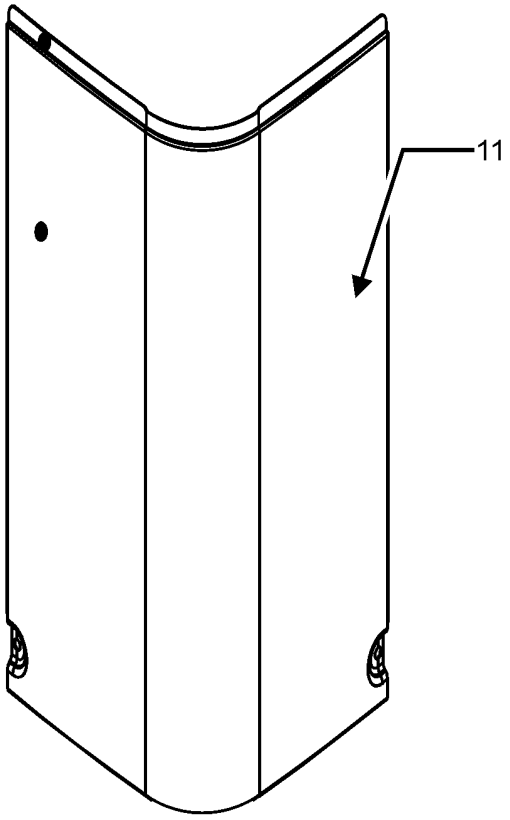

CONTROL COVER PANEL

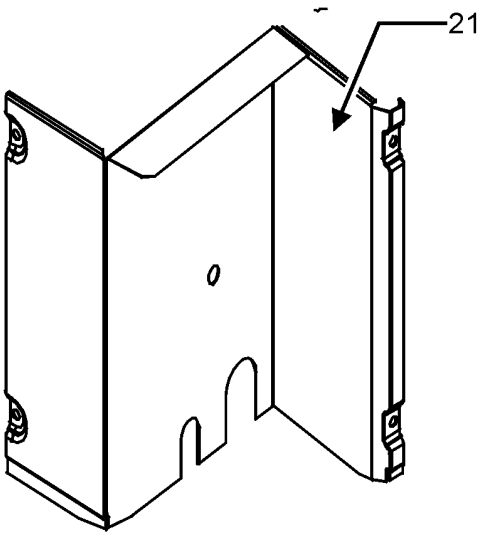

LOWER ACCESS PANEL

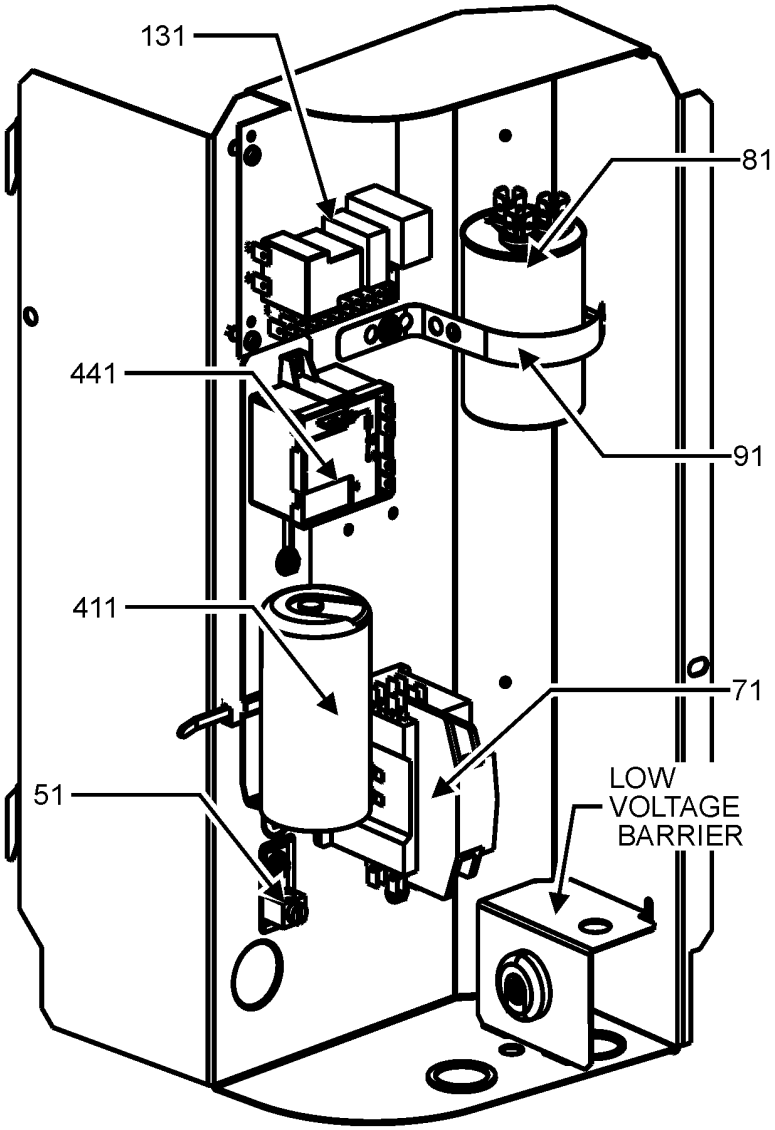

CONTROL PANEL

CONTROL PANEL ASSEMBLY MAY DIFFER FROM WHAT IS SHOWN

Control Panel Assembly

Ref. No:	Part No:	Description:	Ref. No:	Part No:	Description:

Image 1:

11	0121R00937PDG	CONTROL COVER, PNT
21	0121R00909PDG	PNL, LWR ACCESS (M3, M4)
21	0121R00912PDG	PNL, LWR ACCESS (M1, M2, M5)
21	0121R00916PDG	PNL, LWR ACCESS (M7)
21	0121R00917PDG	PNL, LWR ACCESS (M6)
51	B1378533	LUG GROUND SMALL 4T
71	CONT1P030024V	CONT, 1 POLE, 30 AMP, 24 VAC
81	CAB050350440CS	CAP, 5/35 MFD/440V RD - BPRF (M2, M3)
81	CAB050400440CT	CAP, 5/40 MFD/440V RD - BPRF (M4, M6)
81	CAB050450440CT	CAP, 5/45 MFD/440V RD - BPRF (M5)
81	CAB050700440CT	CAP, 5/70 MFD/440V RD - BPRF (M7)
81	CAP050300440CS	CAP,5/30MFD/440V/DUAL RD (M1)
91	4400065	CAPACITOR STRAP
131	PCBDM133	PCB, DEFROST CONTROL
411	0130R00116	CAPACITOR HARD START (M1, M2)
441	0130M00851	PREWIRED RELAY HARD START (M1, M2)
NS	0121R00854	HARD START KIT BRACKET (M1, M2)
NS	0161R00092	NAMEPLATE, GOODMAN

Expanded Model Nomenclature

M1 - GSZB401810AA
M2 - GSZB402410AA
M3 - GSZB403010AA
M4 - GSZB403610AA
M5 - GSZB404210AA
M6 - GSZB404810AA
M7 - GSZB406010AA

Top Panel and Louver Assembly

TOP PANEL AND LOUVER ASSEMBLY

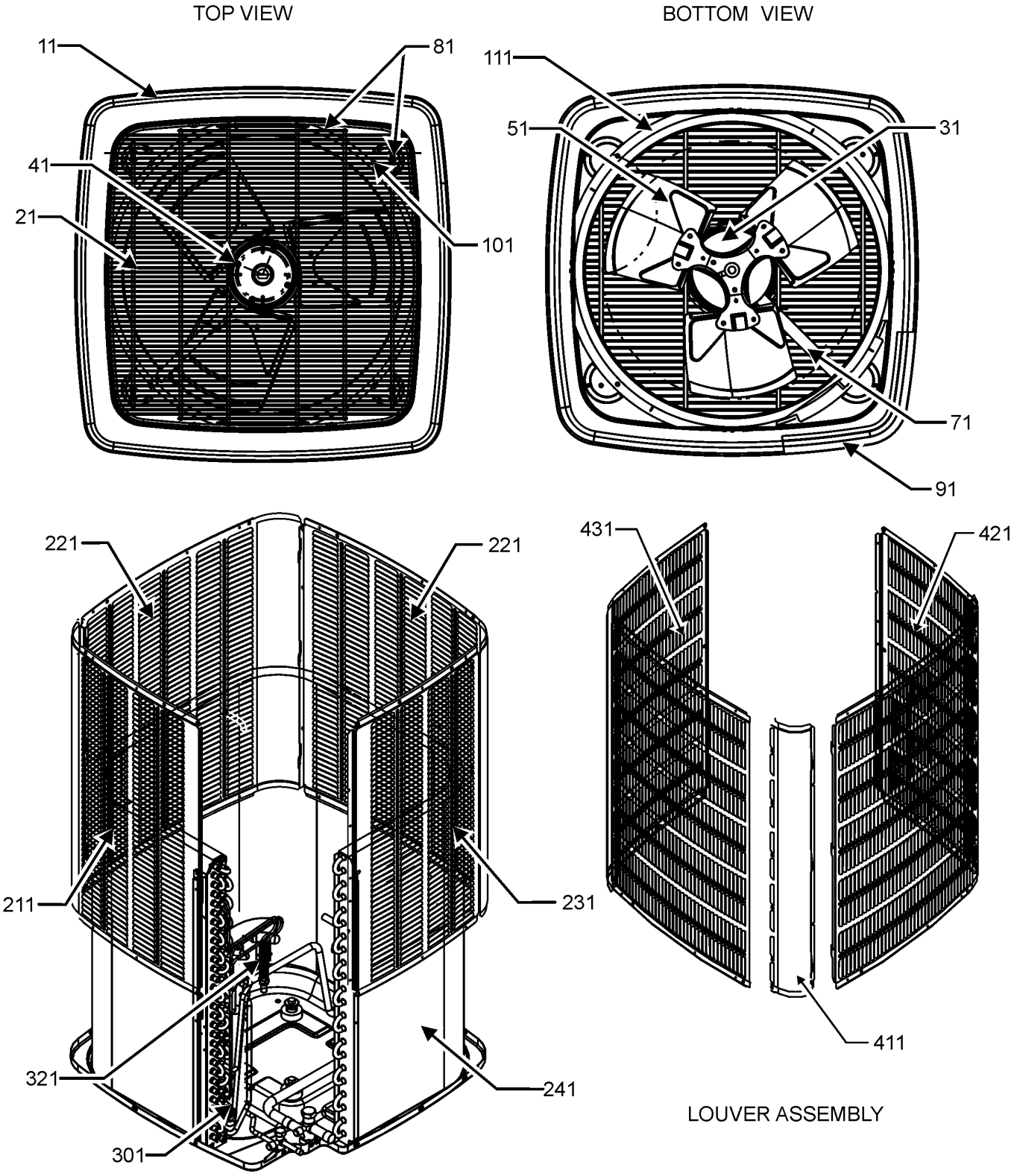

TOP PANEL AND LOUVER ASSEMBLY MAY DIFFER FROM WHAT IS SHOWN

Top Panel and Louver Assembly

Ref. No:	Part No:	Description:
Image 1:		
11	0121R00935PDG	PANEL, TOP 29. PNT (M1, M2, M3)
11	0121R00936PDG	TOP PANEL, 35. PNT (M4, M5, M6, M7)
21	0152R00025	29" GRILLE CFS (M1, M2, M3)
21	0152R00026	GRILL, WIRE 35. TOP (M4, M5, M6, M7)
31	0131M00807	MOTOR, 1/4HP,1SP,8PL,AL (M5, M6, M7)
31	0131M00753	MOTOR, 1/6HP, 1SP, 8PL, AL (M1, M2, M3)
31	0131M00945	MOTOR, 1/6HP, 8PL (M4)
41	0163M00006P	NUT ACORN 5/16 HEX BLACK (QTY 4)
51	0150M00008	FAN BLADE, 22" TNT2203-25 (M1, M2, M3)
51	0150M00066	FAN BLADE, 26" (M4, M5, M6, M7)
71	0161R00002P	CONDUIT (M1, M2, M3)
71	0161R00100	CONDUIT (M4, M5, M6, M7)
81	0163M00003P	SCREW #10 X 1/2, A, SLOT, SR, BLACK (QTY 6)
91	0154R00045	GASKET CONTROL PANEL
101	0163M00004	SCREW #10X3/4" BLK (QTY 4)
111	0161R00104	29" VENTURI CFS (M1, M2, M3)
111	0161R00105	35" VENTURI CFS (M4, M5, M6, M7)
211	0121R00228PDG	PANEL 1, LOUVER 35, 5MM, PNT (M5)
211	0121R00592PDG	PANEL 1, LOUVER 35_34.64 PNT (M6)
211	0121R00593PDG	PANEL 1, LOUVER 35_39.84 PNT (M7)
211	0121R00229PDG	PANEL 1,LOUVER 35,37.8 5MM,PNT (M4)
221	0121R00232PDG	PANEL 2, LOUVER 35 (M4)
221	0121R00231PDG	PANEL 2, LOUVER 35, 5MM, PNT (M5)
221	0121R00594PDG	PANEL 2, LOUVER 35_34.64 PNT (M6)
221	0121R00595PDG	PANEL 2, LOUVER 35_39.84 PNT (M7)
231	0121R00235PDG	PANEL 3, LOUVER 35, 37.8 (M4)
231	0121R00234PDG	PANEL 3, LOUVER 35, 5MM, PNT (M5)
231	0121R00596PDG	PANEL 3, LOUVER 35_34.64 PNT (M6)
231	0121R00597PDG	PANEL 3, LOUVER 35_39.84 PNT (M7)
241	0201R00759	COIL TUBING ASSY (M5)
241	0201R00764	COIL TUBING ASSY (M4)
241	0201R00766	COIL TUBING ASSY (M3)
241	0201R00780	COIL TUBING ASSY (M6)
241	0201R00782	COIL TUBING ASSY (M7)
241	0201R00818	COIL TUBING ASSY (M1, M2)
301	0130M00250	CONTROL, DEFROST (M6, M7)
301	0130M00723	CONTROL, DEFROST (M1, M2, M3, M4, M5)
321	0151R00213	ADJUSTABLE VALVE, TXV R410A (M1, M2)
321	0151R00215	ADJUSTABLE VALVE, TXV R410A (M3)
321	0151R00216	ADJUSTABLE VALVE, TXV R410A (M4)
321	0151R00217	ADJUSTABLE VALVE, TXV R410A (M5)
321	0151R00230	ADJUSTABLE VALVE, TXV R410A (M6)
321	0151R00231	ADJUSTABLE VALVE, TXV R410A (M7)
411	0121R00352PDG	Louver Post, PDG 32.51 (M1, M2)
411	0121R00354PDG	Louver Post, PDG 36.30 (M3)
421	0121R00344PDGR	Louver Panel, PDG 29"_32.51 (M1, M2)
421	0121R00346PDGR	Louver Panel, PDG 29"_36.30 (M3)
431	0121R00344PDGL	Louver Panel, PDG 29"_32.51 (M1, M2)
431	0121R00346PDGL	Louver Panel, PDG 29"_36.30 (M3)
NS	0163M00005P	WASHER BLACK .50 OD .218BD (QTY 4)
NS	0163M00005P	WASHER, BLACK (.50 OD .218ID) (QTY 4)

Expanded Model Nomenclature

M1 - GSZB401810AA
M2 - GSZB402410AA
M3 - GSZB403010AA
M4 - GSZB403610AA
M5 - GSZB404210AA
M6 - GSZB404810AA
M7 - GSZB406010AA

Compressor and Tubing Assembly

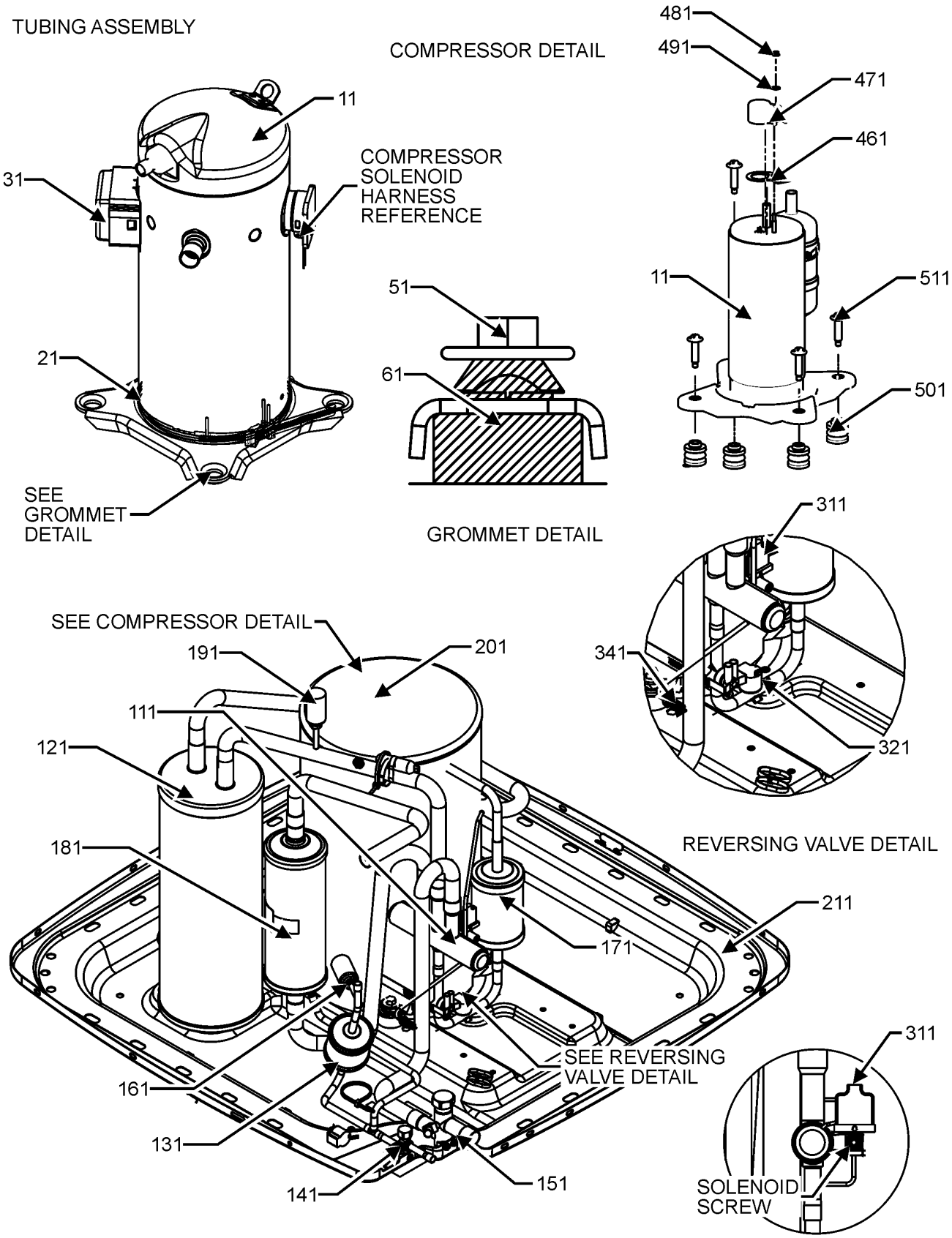

TUBING ASSEMBLY MAY DIFFER FROM WHAT IS SHOWN

Compressor and Tubing Assembly

Ref. No:	Part No:	Description:	Ref. No:	Part No:	Description:
Image 1:					
11	ZP25K7EPFV130	COMP, 208/230/60/1 (M3)			
11	50N3829V-ZAKM	COMPRESSOR (M1)			
11	50N4928V-ZAKM	COMPRESSOR (M2)			
11	ZP31K7EPFV130	COMPRESSOR, COPELAND (M4)			
11	ZP34K7EPFV130	COMPRESSOR, COPELAND (M5)			
11	ZP40K7EPFV130	COMPRESSOR, COPELAND (M6)			
11	ZP51K7EPFV130	COMPRESSOR, COPELAND (M7)			
21	0163R00006	HEATER, CRANKCASE 230V, 40W (M1, M2, M3, M4)			
21	0163R00007	HEATER, CRANKCASE 230V, 40W (M5, M6, M7)			
31	0159R00021	HARNESS, COMP SCROLL (M4)			
31	0159R00001P	HARNESS, COMP SCROLL 130 42" (M3)			
31	0159R00002P	HARNESS, COMP SCROLL 130 46" (M5, M6, M7)			
51	M0221641	TF SHOULDER SCREW (M3, M4, M5, M6, M7)			
61	B1339533	COMPRESSOR GROMMET (M3, M4, M5, M6, M7)			
111	0151R00068	REVERSING VALVE (M1, M2, M3)			
111	0151R00071	REVERSING VALVE (M4, M5, M6, M7)			
121	0151L00009	ACCUMULATOR (M6)			
121	0151L00010	ACCUMULATOR (M7)			
121	B1226207	ACCUMULATOR (M3, M4, M5)			
121	0151R00004P	ACCUMULATOR 3/4 (M1, M2)			
131	0162R00056	FILTER/DRIER-BI-FLOW			
141	0151R00187	BASE VALVE 3/8"			
151	0151R00185	BASE VALVE 3/4" (M1, M2, M3)			
151	0151R00186	BASE VALVE 7/8" (M4, M5, M6, M7)			
161	0130M00089	SW-CUTOUT HI PRESS			
171	0162R00007	MUFFLER 1/2 X 1/2			
181	0151R00218	COMPENSATOR (M7)			
181	0151R00229	COMPENSATOR (M5)			
191	0130M00088	SW-CUTOUT LOW PRESS			
201	0160M00036	COMPRESSOR BLANKET			
211	0121R00006PDG	BASE PAN 29" (M1, M2, M3)			
211	0121R00007PDG	BASE PAN 35" (M4, M5, M6, M7)			
311	0130M00410	REVERSING VALVE HARNESS			
321	0130M00106	DISC THERMOSTAT CRNKCS HTR SW			
331	0130M00349	DISC-THERMOSTAT (M3, M4, M5, M6, M7)			
341	B1787000	VALVE CORE			
461	60100107	TERMINAL COVER GASKET (M1, M2)			
471	60100317	TERMINAL COVER (M1, M2)			
481	60100401	TERMINAL NUT - RECHI COMP (M1, M2)			
491	60100201	WASHER - RECHI COMPRESSOR (M1, M2)			
501	60140209	GROMMET - RECHI COMPRESSOR (M1, M2)			
511	0163M00186	SCREW SHOULDER TF (M1, M2)			
NS	0163M00175	CAP WITH O-RING			
NS	B1225022	SOLENOID COIL			

Expanded Model Nomenclature

M1 - GSZB401810AA
M2 - GSZB402410AA
M3 - GSZB403010AA
M4 - GSZB403610AA
M5 - GSZB404210AA
M6 - GSZB404810AA
M7 - GSZB406010AA