REPAIR PARTS

DD80TC 80% High Efficient Furnace

DD80TC0603BXAA
DD80TC0803BXAA
DD80TC0805CXAA
DD80TC1005CXAA

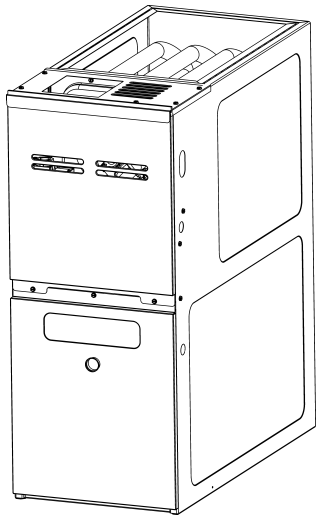

This manual is to be used by qualified technicians only.

© 2025 DAIKIN COMFORT TECHNOLOGIES MANUFACTURING, L.P. ◊ 19001 Kermier Rd. ◊ Waller, TX 77484

Index

Functional Parts List 3

Illustration and Parts ..... 4 - 9

Views shown are for parts illustrations only, not servicing procedures.

Text Codes:

AR - As Required
NA - Not Available
NS - Not Shown
00000000 - See Note
QTY - Quantity Example (QTY 3) (If Quantity not shown, Quantity = 1)
M - Model Example (M1) (If M Code not shown, then part is used on all Models)

Expanded Model Nomenclature:

Example
M1 - Model#1
M2 - Model#2
M3 - Model#3

Daikin Comfort Technologies Manufacturing , L.P. is not responsible for personal injury or property damage resulting from improper service. Review all service information before beginning repairs.

Warranty service must be performed by an authorized technician, using authorized factory parts. If service is required after the warranty expires, Daikin Comfort Technologies Manufacturing , L.P. also recommends contacting an authorized technician and using authorized factory parts.

Daikin Comfort Technologies Manufacturing , L.P. reserves the right to discontinue, or change at any time, specifications or designs without notice or without incurring obligations.

For assistance within the U.S.A. contact:
Homeowner Support
Daikin Comfort Technologies Manufacturing , L.P.
19001 Kermier Road
Waller, Texas 77484
855-770-5678-Telephone
713-863-2382-Facsimile

For assistance outside the U.S.A. contact:
International Division
Daikin Comfort Technologies Manufacturing , L.P.
19001 Kermier Road
Waller, Texas 77484
713-861-2500-Telephone
713-863-2382-Facsimile

Functional Parts

Part No:	Description:
0130F00792	AIR PRESSURE SWITCH (M3, M4)
0130F00795	AIR PRESSURE SWITCH (M2)
0130F00791	AIR PRESSURE SWITCH (M1)
SHARED DATA	Available thru CoolCloud HVAC app.
0130F00010	FLAME SENSOR
0151M00027	GAS VALVE
0130M00141	INDUCTOR, 5.9 AMPS (M3, M4)
10690402	INTERLOCK SWITCH
0130F00071	LIMIT SWITCH (M1)
0130F00038	LIMIT, PRIMARY 120 LT BLUE
0130F00067	LIMIT-RED (M3, M4)
10123529	MANUAL RESET R.O.S. LIMIT (QTY 2)
0131M01002	MOTOR, 1/2 HP (M1, M2)
0131M01003	MOTOR, 3/4 HP (M3, M4)
0131M00781P	MOTOR, VENT 2-STAGE
PCBKF321	PCB, CONTROL BOARD
0130F00036	PRIMARY LIMIT - PINK 180º (M2)
0130F00008	SINI IGNITOR
0130M00140	TRANSFORMER,(120V TO 24V,40VA,

Expanded Model Nomenclature

M1 - DD80TC0603BXAA
M2 - DD80TC0803BXAA
M3 - DD80TC0805CXAA
M4 - DD80TC1005CXAA

Cabinet Assembly

CABINET ASSEMBLY

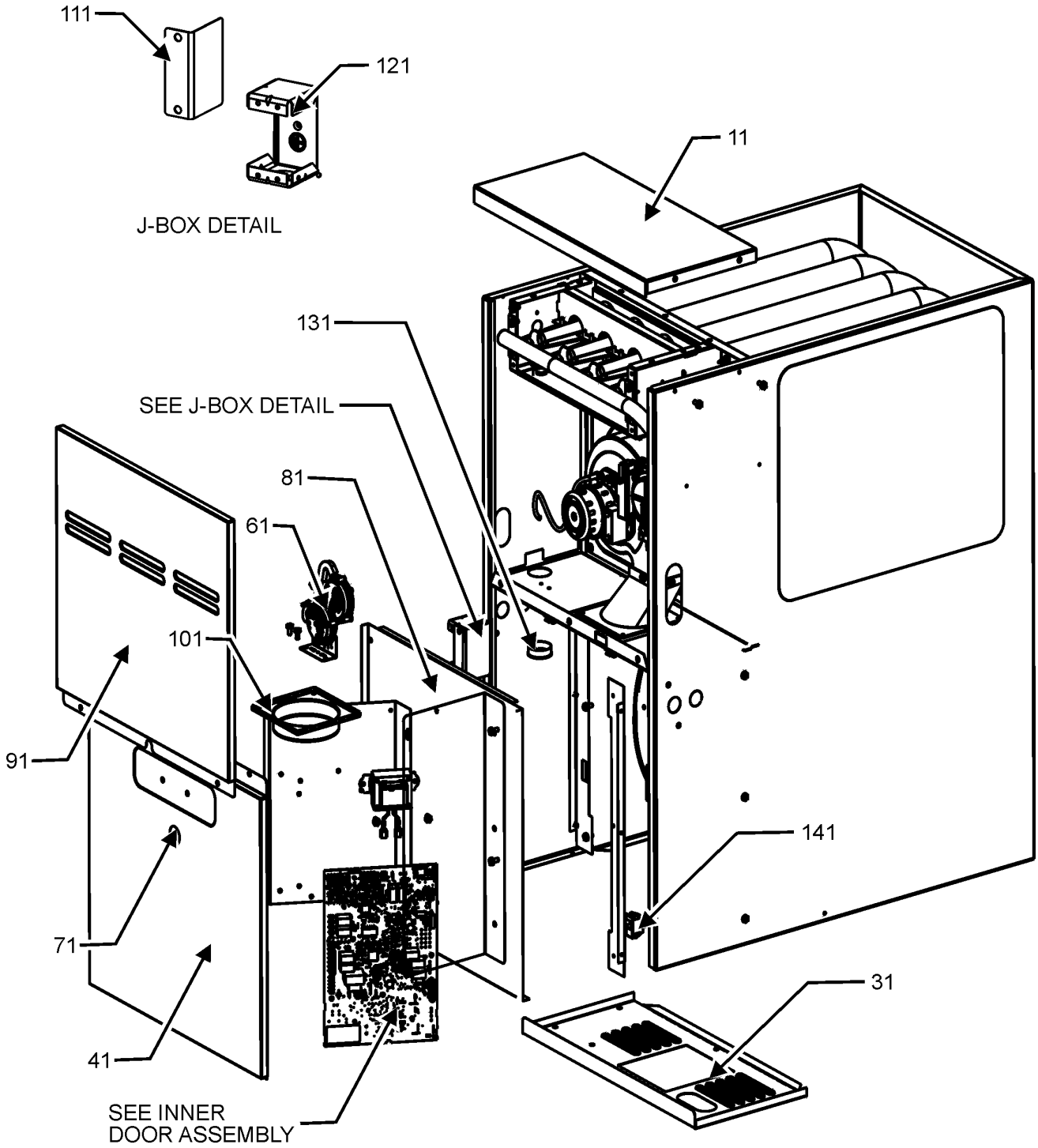

CABINET ASSEMBLY MAY DIFFER FROM WHAT IS SHOWN

Cabinet Assembly

Ref. No:	Part No:	Description:	Ref. No:	Part No:	Description:
Image 1:					
11	0121F00829DG	PAINTED FURNACE BOTTOM (M1, M2)			
11	0121F00830DG	PAINTED FURNACE BOTTOM (M3, M4)			
31	0121F20093DG	PNL, FURNACE TOP PNT (M3, M4)			
31	0121F20096DG	PNL, FURNACE TOP PNT (M1, M2)			
41	0121F00123NG	DOOR, BLOWER, 17.5" PAINTED (M1, M2)			
41	0121F00124NG	DOOR, BLOWER, 21"-PAINTED (M3, M4)			
61	0130F00791	AIR PRESSURE SWITCH (M1)			
61	0130F00792	AIR PRESSURE SWITCH (M3, M4)			
61	0130F00795	AIR PRESSURE SWITCH (M2)			
71	B1392139	VIEW PORT BUSHING-BLOWER DOOR			
81	0121F20007	PNL, INNER DOOR 17.5" (M1, M2)			
81	0121F20009	PNL, INNER DOOR 21" (M3, M4)			
91	0121F20091NG	PNL, CONTROL ACCESS DOOR PNT (M1, M2)			
91	0121F20092NG	PNL, CONTROL ACCESS DOOR PNT (M3, M4)			
101	4023500	CHIMNEY TRANSITION TOP			
111	0121F20061	BOX, JUNCTION 80%			
121	0121F20060	BOX, JUNCTION 90%			
131	B1392147	UNIVERSAL BUSHING WITH SLICE			
141	10690402	INTERLOCK SWITCH			

Expanded Model Nomenclature

M1 - DD80TC0603BXAA
M2 - DD80TC0803BXAA
M3 - DD80TC0805CXAA
M4 - DD80TC1005CXAA

Blower and Inner Front Assembly

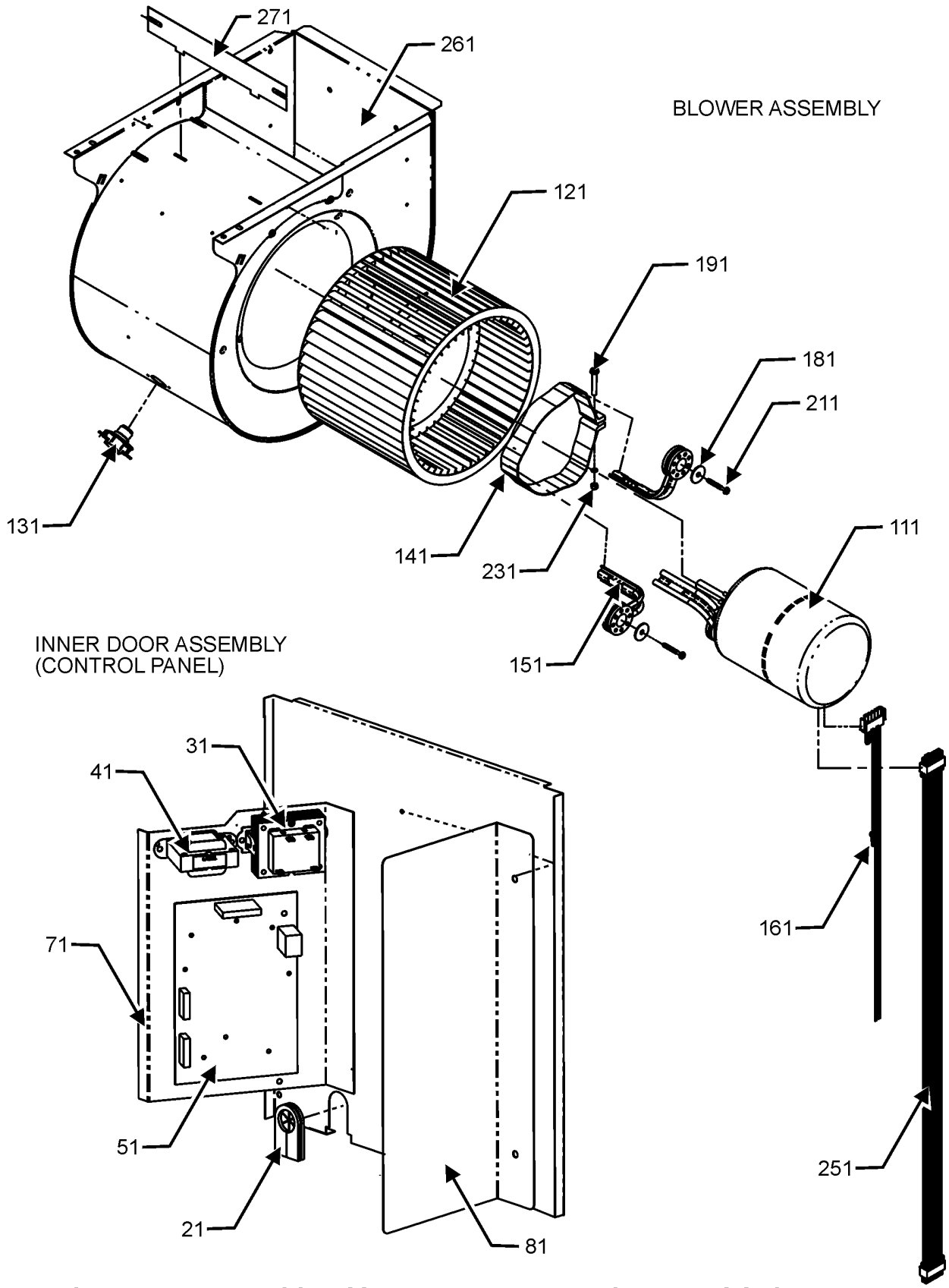

BLOWER AND INNER DOOR ASSEMBLY MAY DIFFER FROM WHAT IS SHOWN

Blower and Inner Front Assembly

Ref. No:	Part No:	Description:	Ref. No:	Part No:	Description:
Image 1:					
21	20477501	GROMMET-HORSESHOE			
31	0130M00140	TRANSFORMER,(120V TO 24V,40VA,			
41	0130M00141	INDUCTOR, 5.9 AMPS (M3, M4)			
51	PCBKF321	PCB, CONTROL BOARD			
71	0121F00864	80% DF B&C CAB MTG PANEL			
81	0121F00823	HEAT SHIELD			
111	0131M01002	MOTOR, 1/2 HP (M1, M2)			
111	0131M01003	MOTOR, 3/4 HP (M3, M4)			
121	0150M00042	WHEEL, BLOWER (10 X 10) (M3, M4)			
121	0150M00043	WHEEL, BLOWER (10 X 8) (M1, M2)			
131	0130F00038	LIMIT, PRIMARY 120 LT BLUE			
141	0121M00038	MOTOR MOUNT BAND (M1, M2)			
141	0121M00039	MOUNT BAND, MOTOR (HEAVY DUTY) (M3, M4)			
151	0171M00012	MOTOR MOUNT ARM (M1, M2)			
151	0163M00538	MOUNT ARM, MOTOR (M3, M4)			
161	0259F00068	POWER HARNESS			
181	B1392918	WASHER, FLAT 1/4 ID X 1 OD (QTY 3)			
191	0163M00320	HEX HEAD ALL THREAD TAP BOLT			
211	M0250565	SCREW-TC 1.25" (QTY 3)			
211	M0250565	SCREW-TC 1.25" (QTY 3)			
231	B1393800	LOCKNUT, NYLON INSERT 1/4 20			
251	0259F00067	CONTROL HARNESS			
261	2539307	BLOWER HOUSING 10 X 10 (M3, M4)			
261	2539306	BLOWER HOUSING 10 X 8 (M1, M2)			
271	764741	BLOWER BLOCK-OFF 10 X 10 (M3, M4)			
271	764740	BLOWER BLOCK-OFF 10 X 8 (M1, M2)			
NS	SHARED DATA	Available thru CoolCloud HVAC app.			

Expanded Model Nomenclature

M1 - DD80TC0603BXAA
M2 - DD80TC0803BXAA
M3 - DD80TC0805CXAA
M4 - DD80TC1005CXAA

Heat Exchange Assembly

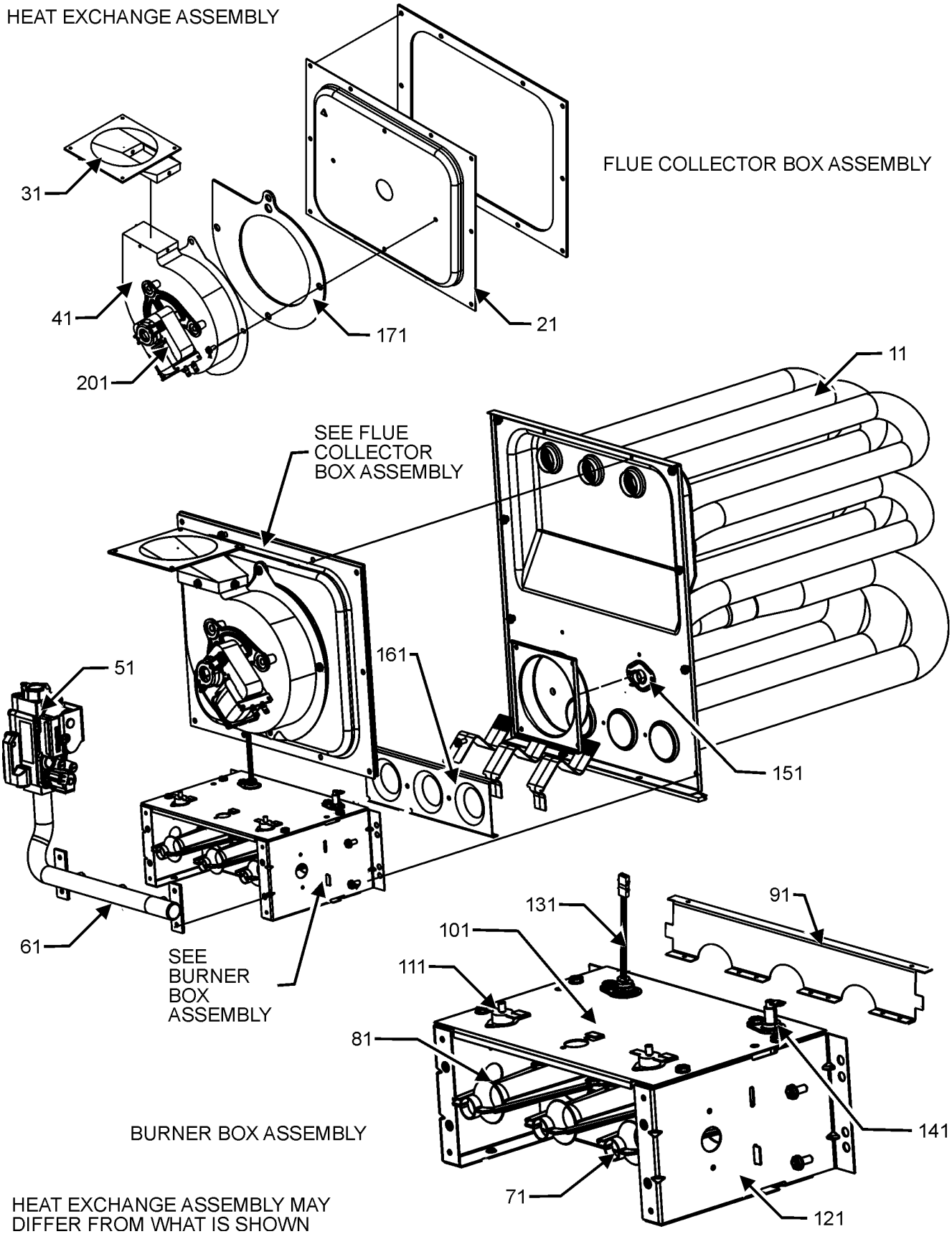

Heat Exchange Assembly

Ref. No:	Part No:	Description:	Ref. No:	Part No:	Description:
Image 1:					
11	0270F03531	HEAT EXCHANGER ASSY (M1)			
11	0270F03532	HEAT EXCHANGER ASSY (M2)			
11	0270F03533	HEAT EXCHANGER ASSY (M3)			
11	0270F03534	HEAT EXCHANGER ASSY (M4)			
21	0121F00332	17.5" COLLECTOR BOX 1.375" DIA (M1)			
21	0121F00331	17.5" COLLECTOR BOX 1.500" DIA (M2)			
21	0121F00365	21" COLLECTOR BOX 1.437" DIA. (M3)			
21	0121F00333	21" COLLECTOR BOX 1.75" DIA (M4)			
31	0128F00006	TRANSITION, BOTTOM			
41	0131M00781P	MOTOR, VENT 2-STAGE			
51	0151M00027	GAS VALVE			
61	0120F00007	MANIFOLD (M1)			
61	0120F00008	MANIFOLD (M2, M3)			
61	0120F00009	MANIFOLD (M4)			
71	10716005	ORIFICE (QTY 3)			
81	B4022700	INSHOT BURNER ASSY 3" (QTY 3)			
91	0121F00168	BURNER BRACKET 3B (M1)			
91	0121F00169	BURNER BRACKET 4B (M2, M3)			
91	0121F00170	BURNER BRACKET 5B (M4)			
101	0121F00759	TOP, BURNER BOX 3 CELL (M1)			
101	0121F00760	TOP, BURNER BOX 4 CELL (M2, M3)			
101	0121F00761	TOP, BURNER BOX 5 CELL (M4)			
111	10123529	MANUAL RESET R.O.S. LIMIT (QTY 2)			
121	0121F00146	BURNER BOX SIDE (QTY 2)			
131	0130F00008	SINI IGNITOR			
141	0130F00010	FLAME SENSOR			
151	0130F00071	LIMIT SWITCH (M1)			
151	0130F00067	LIMIT-RED (M3, M4)			
151	0130F00036	PRIMARY LIMIT - PINK 180º (M2)			
161	4028001	ORIFICE SHIELD 3 CELL (M1)			
161	4028002	ORIFICE SHIELD 4 CELL (M2, M3)			
161	4028003	ORIFICE SHIELD 5 CELL (M4)			
171	0154F00004	VENT MOTOR GASKET 17.5" (M1, M2)			
171	0154F00005	VENT MOTOR GASKET 21" (M3, M4)			
201	DY6.186.070	VENT MOTOR CAPACITOR			
NS	0259F00066	INDUCER HARNESS ASSY			
NS	0270K20000	SEALING KIT			
NS	0259F20007	WIRE HARNESS ASSY			
NS	0259F20010	WIRE HARNESS ASSY			
NS	0259F20011	WIRE HARNESS ASSY			
NS	0259F20012	WIRE HARNESS ASSY			

Expanded Model Nomenclature

M1 - DD80TC0603BXAA
M2 - DD80TC0803BXAA
M3 - DD80TC0805CXAA
M4 - DD80TC1005CXAA