REPAIR PARTS

DD96SN Counter Flow Furnace

DD96SN0403BNAA
DD96SN0403BNAB
DD96SN0603BNAA
DD96SN0804CNAA
DD96SN1005CNAA
DD96SN1205DNAA

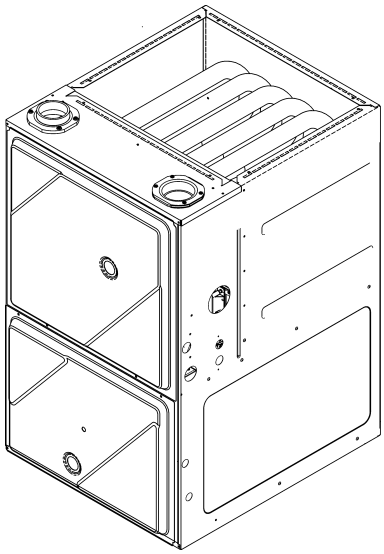

This manual is to be used by qualified technicians only.

This manual replaces RP-D2344

© 2024 - 2025 DAIKIN COMFORT TECHNOLOGIES MANUFACTURING, INC ◊ 19001 Kermier Rd. ◊ Waller, TX 77484

Index

Functional Parts List 3

Illustration and Parts ..... 4 - 11

Views shown are for parts illustrations only, not servicing procedures.

Text Codes:

AR - As Required
NA - Not Available
NS - Not Shown
00000000 - See Note
QTY - Quantity Example (QTY 3) (If Quantity not shown, Quantity = 1)
M - Model Example (M1) (If M Code not shown, then part is used on all Models)

Expanded Model Nomenclature:

Example
M1 - Model#1
M2 - Model#2
M3 - Model#3

Daikin Comfort Technologies Manufacturing , Inc. is not responsible for personal injury or property damage resulting from improper service. Review all service information before beginning repairs.

Warranty service must be performed by an authorized technician, using authorized factory parts. If service is required after the warranty expires, Daikin Comfort Technologies Manufacturing , Inc. also recommends contacting an authorized technician and using authorized factory parts.

Daikin Comfort Technologies Manufacturing , Inc. reserves the right to discontinue, or change at any time, specifications or designs without notice or without incurring obligations.

For assistance within the U.S.A. contact:
Homeowner Support
Daikin Comfort Technologies Manufacturing , Inc.
19001 Kermier Road
Waller, Texas 77484
855-770-5678-Telephone
713-863-2382-Facsimile

For assistance outside the U.S.A. contact:
International Division
Daikin Comfort Technologies Manufacturing , Inc.
19001 Kermier Road
Waller, Texas 77484
713-861-2500-Telephone
713-863-2382-Facsimile

Functional Parts

Part No:	Description:
0130F00038	AUX LIMIT - LT BLUE 120º (QTY 2)
0163F00017	BECKETT BURNER (QTY 2)
PCBBF301V007	CIRCUIT BOARD, FURNACE
0130F00010	FLAME SENSOR
0151M00105	GAS VALVE
0257F20082	HEAT EXCHANGER ASSY (M6)
0257F20081	HEAT EXCHANGER ASSY (M1, M2)
0257F20071	HEAT EXCHANGER ASSY (M5)
0257F20070	HEAT EXCHANGER ASSY (M4)
0257F20069	HEAT EXCHANGER ASSY (M3)
0130F00008	IGNITOR-SINI 17 SEC
20162901	LIMIT, PRIMARY (M1, M2, M3)
20162903	LIMIT, PRIMARY (M5)
0130F00071	LIMIT, PRIMARY (M4)
20162906	LIMIT, PRIMARY (M6)
0130F00123	LIMIT, RESET MAN (M1, M2, M3)
10123539	LIMIT-RESET MAN-ORANGE (M5, M6)
10123534	LIMIT-RESET MAN-ORANGE (M4)
0271F00507	MORRISON 11 X 10 BLOWER (M4, M5)
0271F00508	MORRISON 11 X 11 BLOWER (M6)
0271F00506	MORRISON 11 X 8 BLOWER (M1, M2, M3)
0131F00334M	MOTOR 1 HP W/O CONTROLLER (M5, M6)
0131F00332M	MOTOR 1/2 HP W/O CONTROLLER (M1, M2, M3)
0131F00333M	MOTOR 3/4 HP W/O CONTROLLER (M4)
0131F00260	MOTOR PROGRAMMED (M6)
0131F00259	MOTOR PROGRAMMED (M5)
0131F00258	MOTOR PROGRAMMED (M4)
0131F00257	MOTOR PROGRAMMED (M3)
0131F00256	MOTOR PROGRAMMED (M1, M2)
0171M00001	MOTOR-ID, BLOWER
0130F00439	SWITCH, PRESSURE (M3, M4, M5)
0130F00447	SWITCH, PRESSURE (M1, M2)
0130F00438	SWITCH, PRESSURE (M6)
10690402	SWITCH-INTERLOCK
0130M00140	TRANSFORMER, 120V TO 24V,40VA

SPECIAL PARTS

0161F00090	NAMEPLATE, DAIKIN

Expanded Model Nomenclature

M1 - DD96SN0403BNAA
M2 - DD96SN0403BNAB
M3 - DD96SN0603BNAA
M4 - DD96SN0804CNAA
M5 - DD96SN1005CNAA
M6 - DD96SN1205DNAA

Cabinet Assembly

CABINET ASSEMBLY

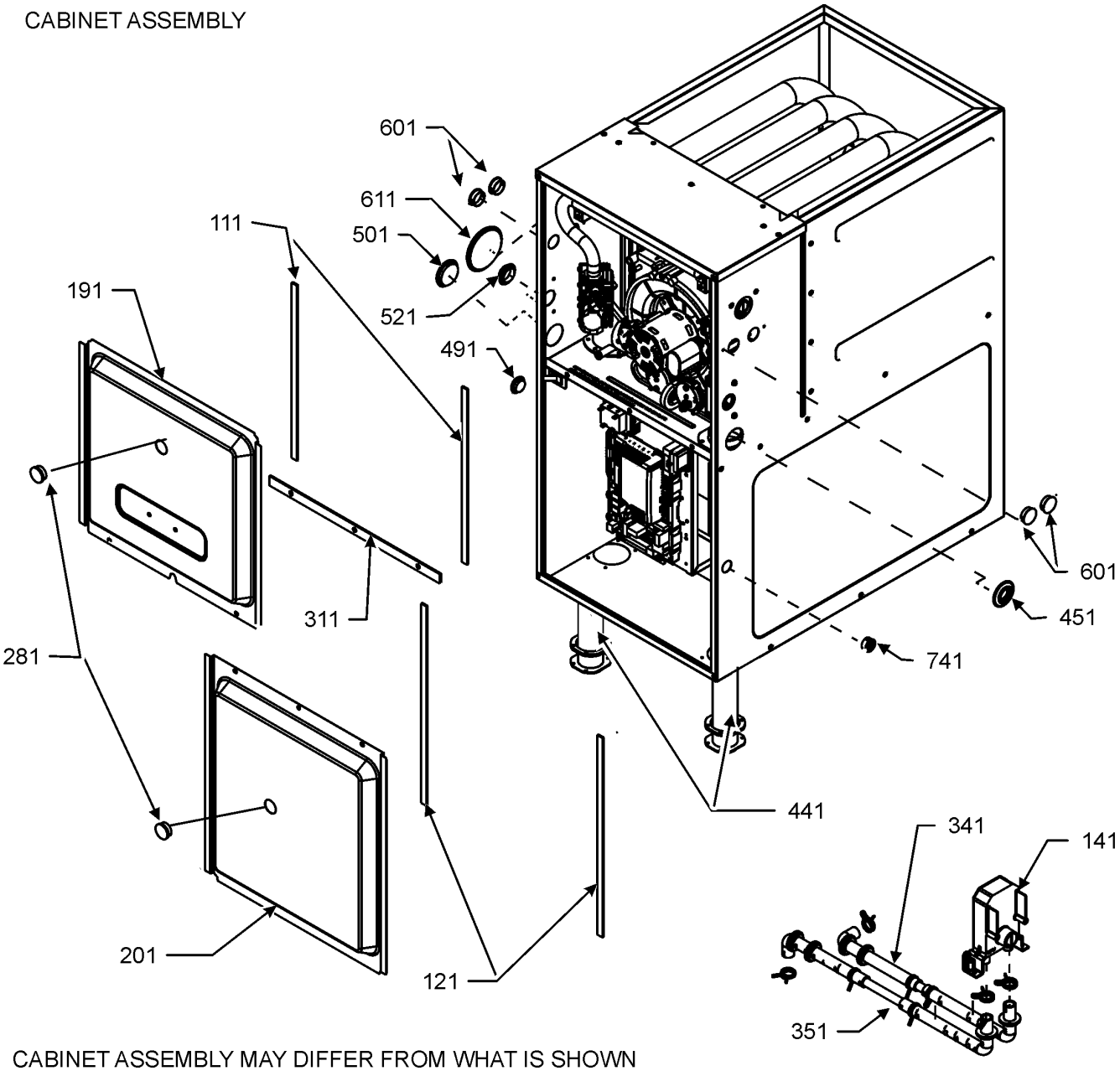

CABINET ASSEMBLY MAY DIFFER FROM WHAT IS SHOWN

DRAIN TRAP ASSEMBLY

DRAIN KIT ASSEMBLY

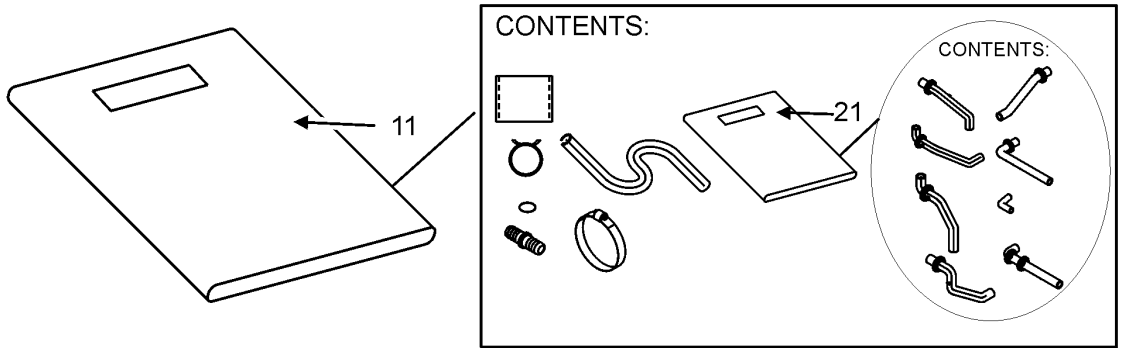

Cabinet Assembly

Ref. No:	Part No:	Description:	Ref. No:	Part No:	Description:
Image 1:					
11	0270F05403	DRAIN KIT ASSY			
21	0270F05403	DRAIN KIT ASSY			
111	0154F00024	GASKET (QTY 2)			
121	0154F00025	GASKET (QTY 2)			
141	0161F00046	DRAIN TRAP			
191	0121F00338NG	DOOR ACCESS 21" PNT (M4, M5)			
191	0121F00337NG	DOOR, ACCESS 17.5" PNT (M1, M2, M3)			
191	0121F00339NG	DOOR, ACCESS 24.5" PNT (M6)			
201	0121F00340NG	DOOR, BLOWER 17.5" PNT (M1, M2, M3)			
201	0121F00341NG	DOOR, BLOWER 21" PNT (M4, M5)			
201	0121F00342NG	DOOR, BLOWER 24.5" PNT (M6)			
281	B1392139	VIEW PORT BUSHING (QTY 2)			
311	0154F00020	GASKET, DECK (M1, M2, M3)			
311	0154F00021	GASKET, DECK (M4, M5)			
311	0154F00022	GASKET, DECK (M6)			
341	0270F03125	CF DRAIN TUBE ASSY (M1, M2, M3)			
341	0270F03515	CF DRAIN TUBE ASSY (M4, M5)			
341	0270F03516	CF DRAIN TUBE ASSY (M6)			
351	0270F03126	CF DRAIN TUBE ASSY (M4, M5)			
351	0270F03127	CF DRAIN TUBE ASSY (M6)			
351	0270F03514	CF DRAIN TUBE ASSY (M1, M2, M3)			
441	0161F00064	PIPE, STRAIGHT CF (QTY 2)			
451	M0501301	PIPE GROMMET			
491	M0570808	BUTTON PLUG			
501	M0570806	BUTTON PLUG			
521	0161M00027	HOLE PLUG			
601	B1392021	PLASTIC PLUG, 1" (2713-BLK) (QTY 4)			
611	0163M00460	CLAMP-HOSE (QTY 2)			
741	B1392104	UNIVERSAL BUSHING UB 875			
NS	M0310345	BUTTON PLUG (QTY 2)			
NS	M0570807	BUTTON PLUG			
NS	M0209730	DECORATIVE SCREW (QTY 3)			
NS	0154F00041	FRESH AIR GASKET			
NS	0163M00319	HEX NUT INSERT (QTY 3)			
NS	0161F00090	NAMEPLATE, DAIKIN			
NS	M0273904	RETAINER SCREW (QTY 3)			

Expanded Model Nomenclature

M1 - DD96SN0403BNAA
M2 - DD96SN0403BNAB
M3 - DD96SN0603BNAA
M4 - DD96SN0804CNAA
M5 - DD96SN1005CNAA
M6 - DD96SN1205DNAA

Blower Assembly

BLOWER ASSEMBLY

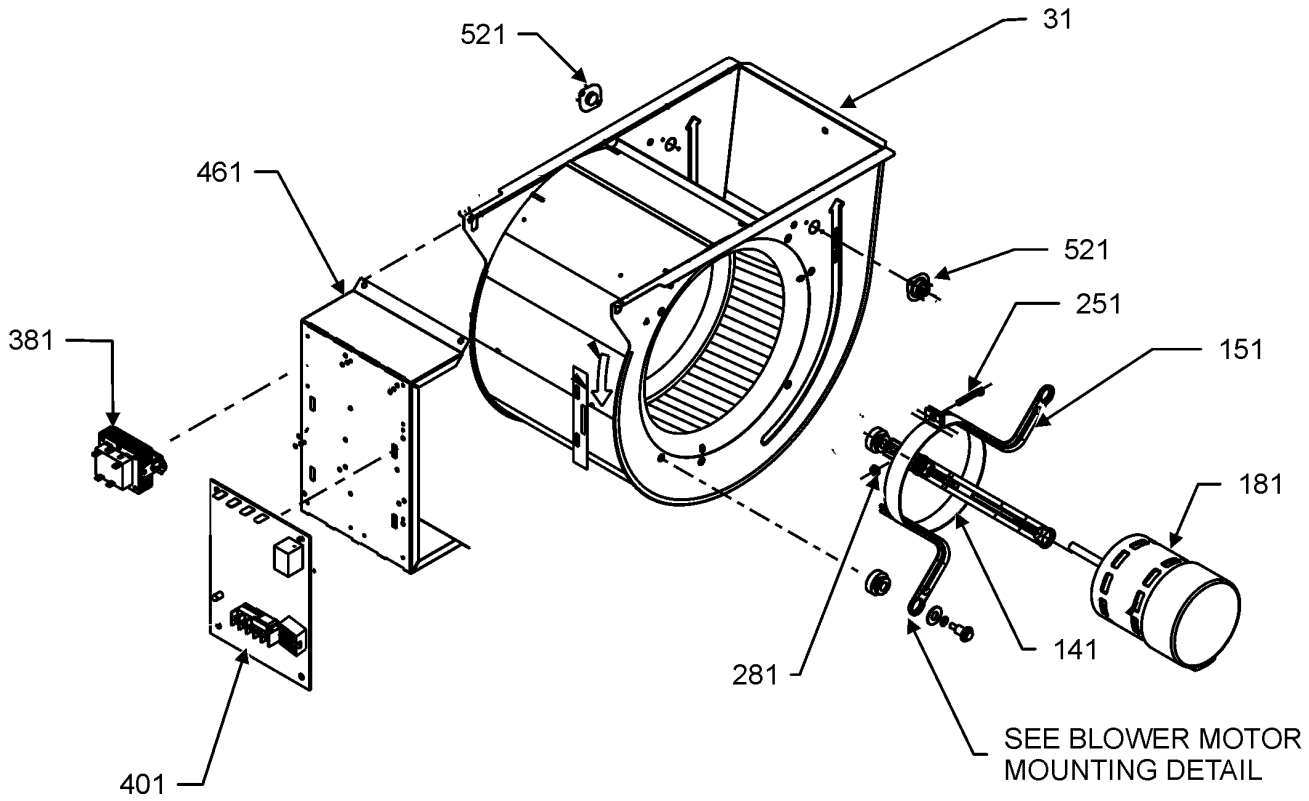

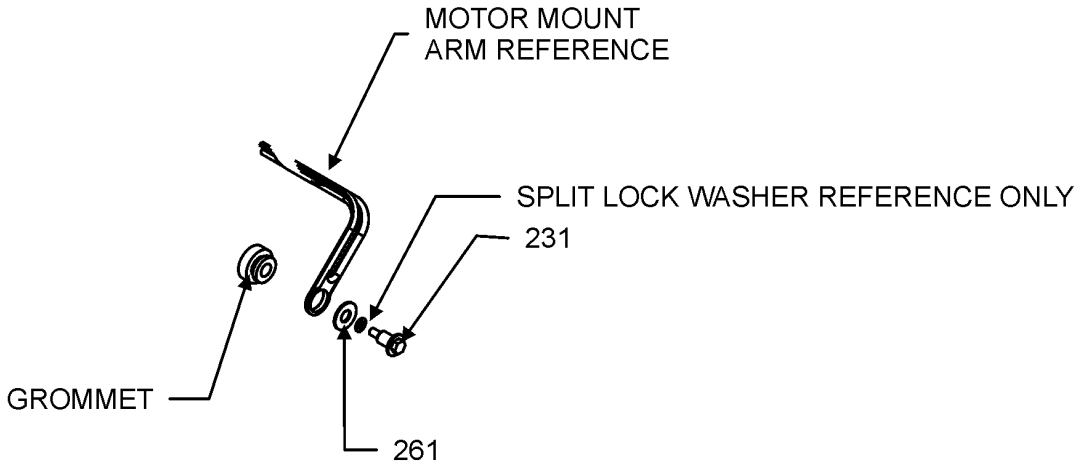

BLOWER MOTOR
MOUNTING DETAIL

BLOWER ASSEMBLY MAY DIFFER FROM WHAT IS SHOWN

Blower Assembly

Ref. No:	Part No:	Description:	Ref. No:	Part No:	Description:
Image 1:					
31	0271F00507	MORRISON 11 X 10 BLOWER (M4, M5)			
31	0271F00508	MORRISON 11 X 11 BLOWER (M6)			
31	0271F00506	MORRISON 11 X 8 BLOWER (M1, M2, M3)			
141	0121M00039	MOUNT BAND, MOTOR (HEAVY DUTY)			
151	0163M00538	MOUNT ARM, MOTOR (QTY 3)			
181	0131F00334M	MOTOR 1 HP W/O CONTROLLER (M5, M6)			
181	0131F00332M	MOTOR 1/2 HP W/O CONTROLLER (M1, M2, M3)			
181	0131F00333M	MOTOR 3/4 HP W/O CONTROLLER (M4)			
181	0131F00256	MOTOR PROGRAMMED (M1, M2)			
181	0131F00257	MOTOR PROGRAMMED (M3)			
181	0131F00258	MOTOR PROGRAMMED (M4)			
181	0131F00259	MOTOR PROGRAMMED (M5)			
181	0131F00260	MOTOR PROGRAMMED (M6)			
231	M0250565	TC SCREW 1.25" (QTY 3)			
251	0163M00320	HEX HEAD ALL THREAD TAP BOLT			
261	B1392918	FLAT WASHER (QTY 3)			
281	B1393800	LOCKNUT, NYLON, INSERT 1/4, 20			
381	0130M00140	TRANSFORMER, 120V TO 24V,40VA			
401	PCBBF301V007	CIRCUIT BOARD, FURNACE			
461	0121F00802	MOUNTING PANEL, CONTROLS			
521	0130F00038	AUX LIMIT - LT BLUE 120º (QTY 2)			
NS	B1392021	1" PLASTIC PLUG (QTY 4)			
NS	0159F00160	CTM, MOTOR HARNESS			
NS	0259F00024	HARNESS - BLOWER			
NS	M0282015	KEPS NUT (M5, M6)			
NS	0163M00279	SCREW #6 X .375 SELF DRILL (M5, M6)			
NS	B1392820	SLIT LOCK WASHER (M5, M6)			

Expanded Model Nomenclature

M1 - DD96SN0403BNAA
M2 - DD96SN0403BNAB
M3 - DD96SN0603BNAA
M4 - DD96SN0804CNAA
M5 - DD96SN1005CNAA
M6 - DD96SN1205DNAA

To replace the Shaft end of motor order:

0131F00332M	MOTOR 1/2 HP W/O CONTROLLER
0131F00333M	MOTOR 3/4 HP W/O CONTROLLER
0131F00334M	MOTOR 1 HP W/O CONTROLLER

Chassis Assembly

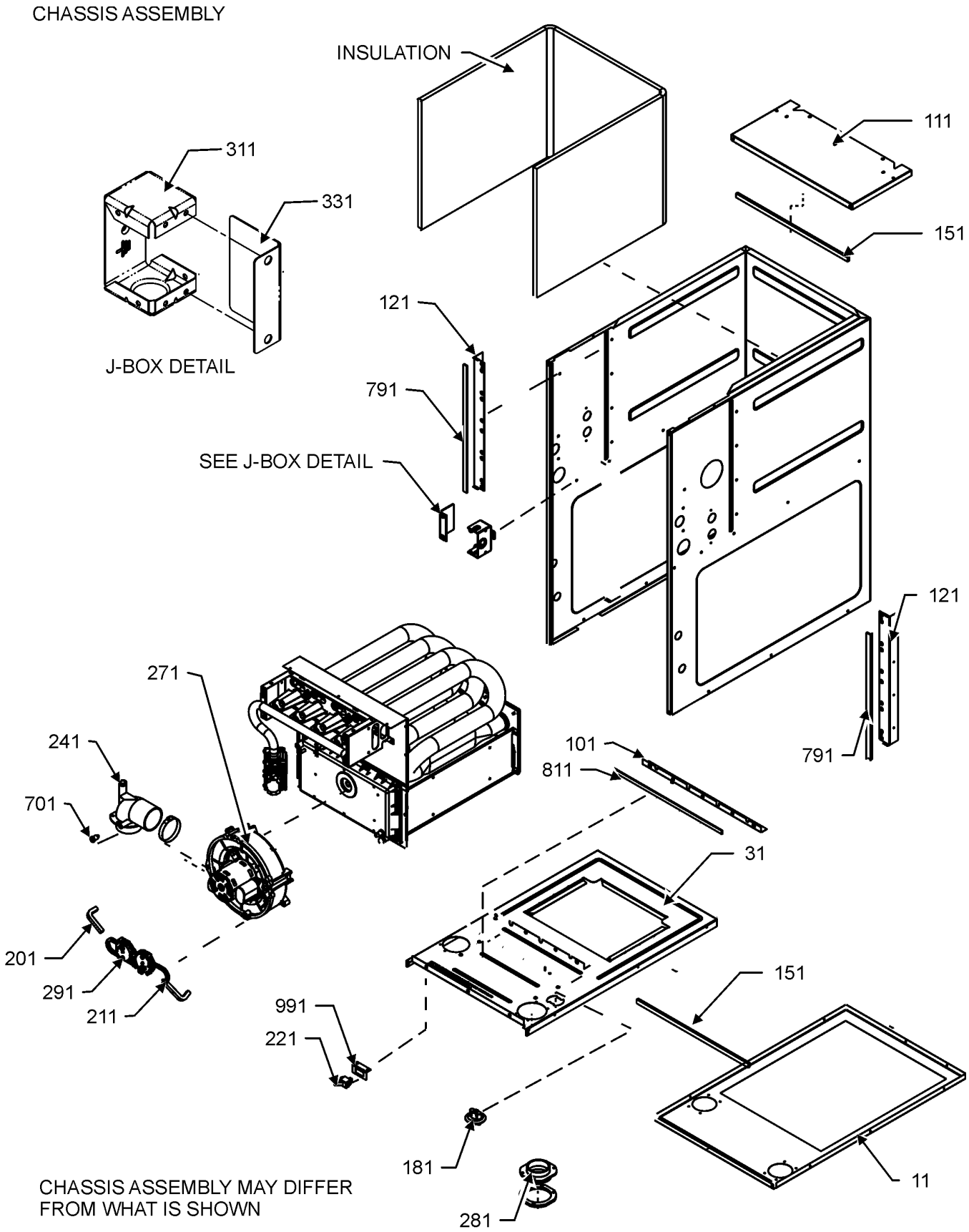

Chassis Assembly

Ref. No:	Part No:	Description:	Ref. No:	Part No:	Description:
Image 1:					
11	0121F00548DG	PAINTED BASEPAN, 17.5 CF (M1, M2, M3)			
11	0121F00549DG	PAINTED BASEPAN, 21 CF (M4, M5)			
11	0121F00550DG	PAINTED BASEPAN, 24.5 CF (M6)			
31	0121F00536	DECK-BLOWER 17.5" CF (M1, M2, M3)			
31	0121F00537	DECK-BLOWER 21" CF (M4, M5)			
31	0121F00538	DECK-BLOWER 24.5" CF (M6)			
101	0121F00314	ANGLE, DECK (M1, M2, M3)			
101	0121F00315	ANGLE, DECK (M4, M5)			
101	0121F00316	ANGLE, DECK (M6)			
111	0121F00426DG	TOP, PAINTED FURNACE 17.5" CF (M1, M2, M3)			
111	0121F00434DG	TOP, PAINTED FURNACE 21" CF (M4, M5)			
111	0121F00442DG	TOP, PAINTED FURNACE 24.5 CF (M6)			
121	0121F00313	SIDE ANGLE (QTY 2)			
151	20179307	GASKET (M6)			
151	20179309	GASKET (M1, M2, M3)			
151	20179310	GASKET (M4, M5)			
181	0159F20015	WIRE HARNESS (M3, M4, M5, M6)			
181	0159F20017	WIRE HARNESS (M1, M2)			
201	0164M20002	HOSE, PRESSURE (M3, M4, M5, M6)			
201	0164M20003	HOSE, PRESSURE (M1, M2)			
211	0164M20004	HOSE, PRESSURE (M1, M2, M3)			
211	0164M20005	HOSE, PRESSURE (M4, M5)			
211	0164M20006	HOSE, PRESSURE (M6)			
221	10690402	SWITCH-INTERLOCK			
241	0164F00026	ELBOW-FLUE, 17.5" CFLOW (M1, M2, M3)			
241	0164F00027	ELBOW-FLUE, 21" CFLOW (M4, M5)			
241	0164F00028	ELBOW-FLUE, 24.5" CFLOW (M6)			
271	0171M00001	MOTOR-ID, BLOWER			
281	0161F00037	COUPLING			
291	0130F00438	SWITCH, PRESSURE (M6)			
291	0130F00439	SWITCH, PRESSURE (M3, M4, M5)			
291	0130F00447	SWITCH, PRESSURE (M1, M2)			
311	0121F20060	BOX, JUNCTION 90%			
331	0121F20061	BOX, JUNCTION 80%			
701	M0326804	TUBE PLUG			
791	0154F00015	GASKET (QTY 2)			
811	0154F00014	GASKET (M1, M2, M3)			
811	0154F00016	GASKET (M4, M5, M6)			
991	0121F00389	BRACKET, DOOR SWITCH			
NS	0160F00015	INSULATION, HT EXCHANGER 17.5" (M1, M2, M3)			
NS	0160F00016	INSULATION, HT EXCHANGER 21" (M4, M5)			
NS	0160F00017	INSULATION, HT EXCHANGER 24.5" (M6)			

Expanded Model Nomenclature

M1 - DD96SN0403BNAA
M2 - DD96SN0403BNAB
M3 - DD96SN0603BNAA
M4 - DD96SN0804CNAA
M5 - DD96SN1005CNAA
M6 - DD96SN1205DNAA

Heat Exchange and Manifold Assembly

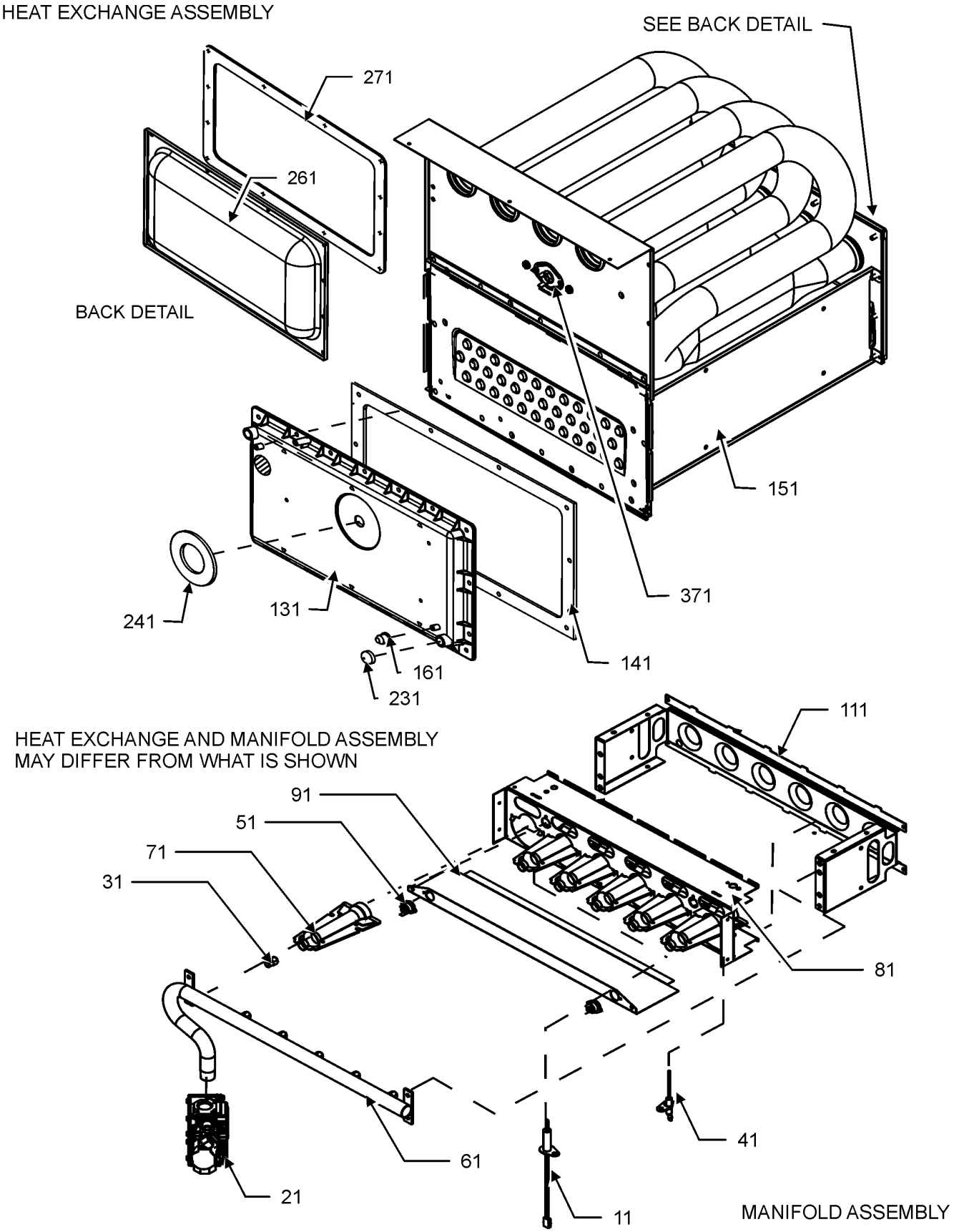

Heat Exchange and Manifold Assembly

Ref. No:	Part No:	Description:
Image 1:		
11	0130F00008	IGNITOR-SINI 17 SEC
21	0151M00105	GAS VALVE
31	10716005	ORIFICE (QTY 2)
41	0130F00010	FLAME SENSOR
51	0130F00123	LIMIT, RESET MAN (M1, M2, M3)
51	10123534	LIMIT-RESET MAN-ORANGE (M4)
51	10123539	LIMIT-RESET MAN-ORANGE (M5, M6)
61	0163F00007	MANIFOLD (M1, M2)
61	0163F00008	MANIFOLD (M3)
61	0163F00009	MANIFOLD (M4)
61	0163F00010	MANIFOLD (M5)
61	0163F00011	MANIFOLD (M6)
71	0163F00017	BECKETT BURNER (QTY 2)
81	0121F00456	BRACKET-BURNER 2 (M1, M2)
81	0121F00455	BRACKET-BURNER 3 (M3)
81	0121F00454	BRACKET-BURNER 4 (M4)
81	0121F00453	BRACKET-BURNER 5 (M5)
81	0121F00451	BRACKET-BURNER 6 (M6)
91	0121F00539	SHEILD, BURNER (M1, M2)
91	0121F00540	SHEILD, BURNER (M3)
91	0121F00541	SHEILD, BURNER (M4)
91	0121F00542	SHEILD, BURNER (M5)
91	0121F00543	SHEILD, BURNER (M6)
111	0121F00469	ORIFICE BRACKET-BURNER 2 (M1, M2)
111	0121F00468	ORIFICE BRACKET-BURNER 3 (M3)
111	0121F00467	ORIFICE BRACKET-BURNER 4 (M4)
111	0121F00466	ORIFICE BRACKET-BURNER 5 (M5)
111	0121F00465	ORIFICE BRACKET-BURNER 6 (M6)
131	0161F00030	COVER, FRONT (M4)
131	0161F00053	COVER, FRONT (M1, M2)
131	0161F00054	COVER, FRONT (M3)
131	0161F00060	COVER, FRONT (M5)
131	0161F00063	COVER, FRONT (M6)
141	0154F00026	GASKET FRONT COVER (M1, M2, M3)
141	0154F00030	GASKET FRONT COVER (M4, M5)
141	0154F00034	GASKET FRONT COVER (M6)
151	0257F20069	HEAT EXCHANGER ASSY (M3)
151	0257F20070	HEAT EXCHANGER ASSY (M4)
151	0257F20071	HEAT EXCHANGER ASSY (M5)
151	0257F20081	HEAT EXCHANGER ASSY (M1, M2)
151	0257F20082	HEAT EXCHANGER ASSY (M6)
161	M0326804	TUBE PLUG
231	A1781105	CAP-VINYL .500
241	0154F00043	GASKET ID BLOWER
261	0121F00317	COVER, REAR (M1, M2, M3)
261	0121F00318	COVER, REAR (M4, M5)
261	0121F00319	COVER, REAR (M6)
271	0154F00037	GASKET, REAR CVR (M1, M2, M3)
271	0154F00038	GASKET, REAR CVR (M4, M5)
271	0154F00039	GASKET, REAR CVR (M6)
371	0130F00071	LIMIT, PRIMARY (M4)
371	20162901	LIMIT, PRIMARY (M1, M2, M3)
371	20162903	LIMIT, PRIMARY (M5)
371	20162906	LIMIT, PRIMARY (M6)
NS	0154F00041	GASKET FRESH AIR
NS	0121F00583	INSULATION, RETAINER (M1, M2, M3)
NS	0121F00584	INSULATION, RETAINER (M4, M5)

Ref. No:	Part No:	Description:
Image 1:		
NS	0121F00585	INSULATION, RETAINER (M6)
NS	0121F00355	SHIELD, COIL (QTY 2)

Expanded Model Nomenclature

M1 - DD96SN0403BNAA
M2 - DD96SN0403BNAB
M3 - DD96SN0603BNAA
M4 - DD96SN0804CNAA
M5 - DD96SN1005CNAA
M6 - DD96SN1205DNAA