REPAIR PARTS

DVH 10 Ton R32 Inverter Heat Pump

DVH1203D000001SAA
DVH1204D000001SAA

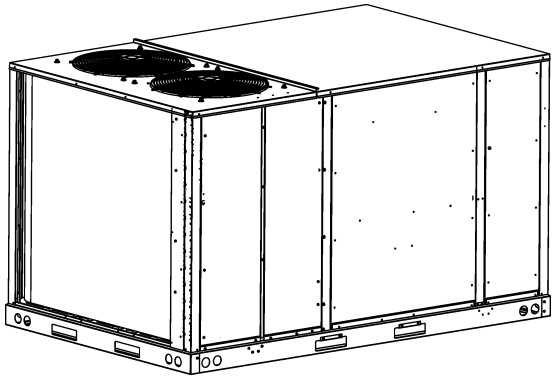

This manual is to be used by qualified technicians only.

© 2026 DAIKIN COMFORT TECHNOLOGIES MANUFACTURING, INC ◊ 19001 Kermier Rd. ◊ Waller, TX 77484

Index

Functional Parts List 3

Illustration and Parts ..... 4 - 27

Views shown are for parts illustrations only, not servicing procedures.

Text Codes:

AR - As Required
NA - Not Available
NS - Not Shown
00000000 - See Note
QTY - Quantity Example (QTY 3) (If Quantity not shown, Quantity = 1)
M - Model Example (M1) (If M Code not shown, then part is used on all Models)

Expanded Model Nomenclature:

Example
M1 - Model#1
M2 - Model#2
M3 - Model#3

Daikin Comfort Technologies Manufacturing , Inc. is not responsible for personal injury or property damage resulting from improper service. Review all service information before beginning repairs.

Warranty service must be performed by an authorized technician, using authorized factory parts. If service is required after the warranty expires, Daikin Comfort Technologies Manufacturing , Inc. also recommends contacting an authorized technician and using authorized factory parts.

Daikin Comfort Technologies Manufacturing , Inc. reserves the right to discontinue, or change at any time, specifications or designs without notice or without incurring obligations.

For assistance within the U.S.A. contact:
Equipment Support
Daikin Comfort Technologies Manufacturing , Inc.
19001 Kermier Road
Waller, Texas 77484
855-770-5678-Telephone
713-863-2382-Facsimile

For assistance outside the U.S.A. contact:
International Division
Daikin Comfort Technologies Manufacturing , Inc.
19001 Kermier Road
Waller, Texas 77484
713-861-2500-Telephone
713-863-2382-Facsimile

Functional Parts

Part No:	Description:
2P613983-4	BACNET MS/TP ADAPTOR
3SA27024-1	CHECK VALVE
4SA27011-1	CHECK VALVE
JP057BEAXMV-T	Compressor Inverter (230V) (M1)
JP057BEAYMR-T	Compressor Inverter (460V) (M2)
CONT3P030024D	CONT, 3 POLE, 30 AMP, 24VAC
3P148066-7	CRANK CASE HEATER
2P519551-2	DC Fan Motor, 230V (M1)
2P557547-1	DC Fan Motor, 460V (M2)
2P800833-2	FAN INVERTER ASSEMBLY 230V (M1)
012P728188-19	FAN PCB ASSEMBLY (460V) (M2)
3SA52119-1	FOUR WAY VALVE BODY
3P353634-5	FOUR WAY VALVE COIL
3SA58023-2	GAGE PORT WITH CHECK VALVE
3SA58023-2	GAGE PORT WITH CHECK VALVE
3S581008-1	HIGH PRESSURE SWITCH
2P734448-1	ID PCB ASSY(EB23001)
2P756502-1	INVERTER ASSEMBLY (460V) (M2)
2P798207-1	INVERTER ASSEMBLY 230V (M1)
3S474001-1	LOW FREQUENCY TRANSFORMER (M2)
3P383937-6	MOTOR OPERATED VALVE COIL
3P169502-15	MOTOR OPERATED VALVE COIL
3P377345-4	MOTOR OPERATED VALVE COIL
3P383937-4	MOTOR OPERATED VALVE COIL
0131L00122	MOTOR, BLOWER 208/230V (M1)
0131L00124	MOTOR, BLOWER 460V (M2)
3P513688-2	NOISE FILTER (460) (M2)
3P257226-2	NOISE FILTER PCB 230V (M1)
2P682598-78	PCB ASSY
2P800834-2	PCB,FAN INVERTER ASSEMBLY 460V (M2)
3S510009-1	PRESSURE CONTROL VAIVE
3S481001-3	PRESSURE SENSOR, LOW
3S481002-1	PRESSURE SENSOR, NSK
0130F00647	PRESSURE SWITCH
0131L00463MCSB	PROGRAMMED MOTOR CONTROLLER (M2)
0131L00463MCSA	PROGRAMMED MOTOR CONTROLLER (M1)
SER2A08012	SENSOR
3SA52069-1	SOLENOID VALVE
3P384150-3	SOLENOID VALVE COIL
2P589391-13	SUB PCB
0130L00406	TRANSFORMER (M1)
0130M00858	TRANSFORMER (M2)

SPECIAL PARTS

RP-FIOPM*	ACCESSORY RP MANUAL

Expanded Model Nomenclature

M1 - DVH1203D000001SAA
M2 - DVH1204D000001SAA

CABINET ASSEMBLY

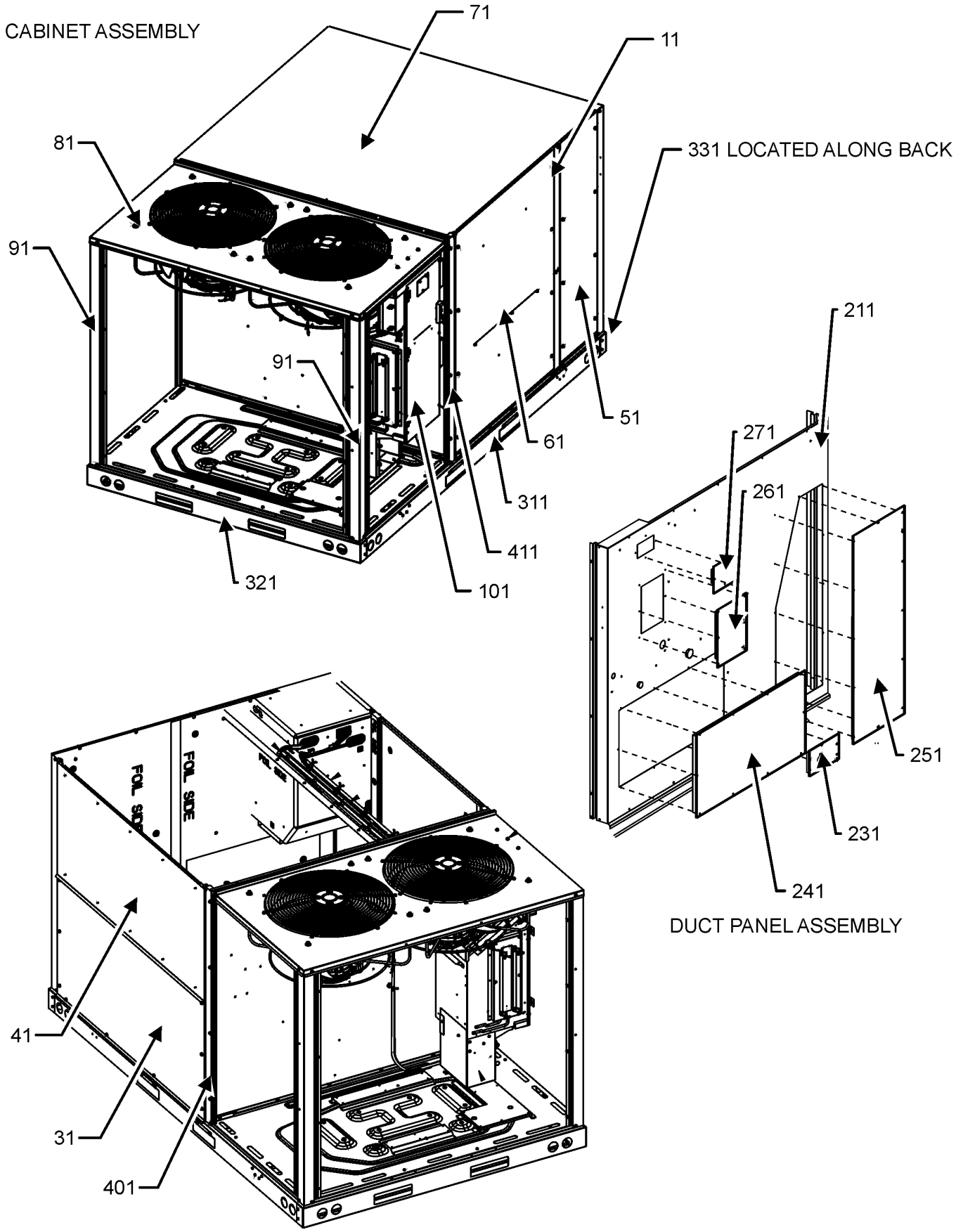

CABINET ASSEMBLY MAY DIFFER FROM WHAT IS SHOWN

CABINET ASSEMBLY

Ref. No:	Part No:	Description:	Ref. No:	Part No:	Description:
Image 1:					
11	0121L04041SB	PAINTED, PANEL, SIDE POST			
31	0121L04312SB	PAINTED, ECONOMIZER PANEL			
41	0121L04447SB	PAINTED, PANEL, FILTER			
51	0121L02952SB	PAINTED CONTROL PANEL			
61	0121L03821SB	PAINTED BLOWER PANEL			
71	0121L04551SB	PAINTED PANEL TOP INDOOR			
81	0121L05191SB	PAINTED TOP OUTDOOR			
91	0121L06038SB	PAINTED CORNER POST (QTY 2)			
101	0270L03155	ASSY WELDED CONTROL DOOR			
211	0121L05963SB	PAINTED PANEL DUCT			
231	0121L03958SB	PAINTED, DRAIN PAN COVER			
241	0121L02921SB	PAINTED COVER DUCT SUPPLY			
251	0121L03508SB	PAINTED COVER DUCT RETURN			
261	0121L04612SB	PAINTED COVER-DISC SWITCH			
271	0121L03932SB	PNT, CONVENIENCE COVER LT COMM			
311	0121L06127	SIDE RAIL (QTY 2)			
321	0121L05776	END RAIL			
331	0121L05103	RAIL, END			
401	0121L03187SB	PAINTED, SIDE POST			
411	0121L06152SB	PAINTED, SIDE POST			
NS	0141L00084	BOARD FORK (QTY 2)			
NS	0121L03727	BRACKET-FORK BOARD (QTY 4)			
NS	0121L05839	BRKT CONTROL BOX			

Expanded Model Nomenclature

M1 - DVH1203D000001SAA
M2 - DVH1204D000001SAA

TOP PANEL OUTDOOR FAN ASSEMBLY

TOP PANEL OUTDOOR FAN ASSEMBLY

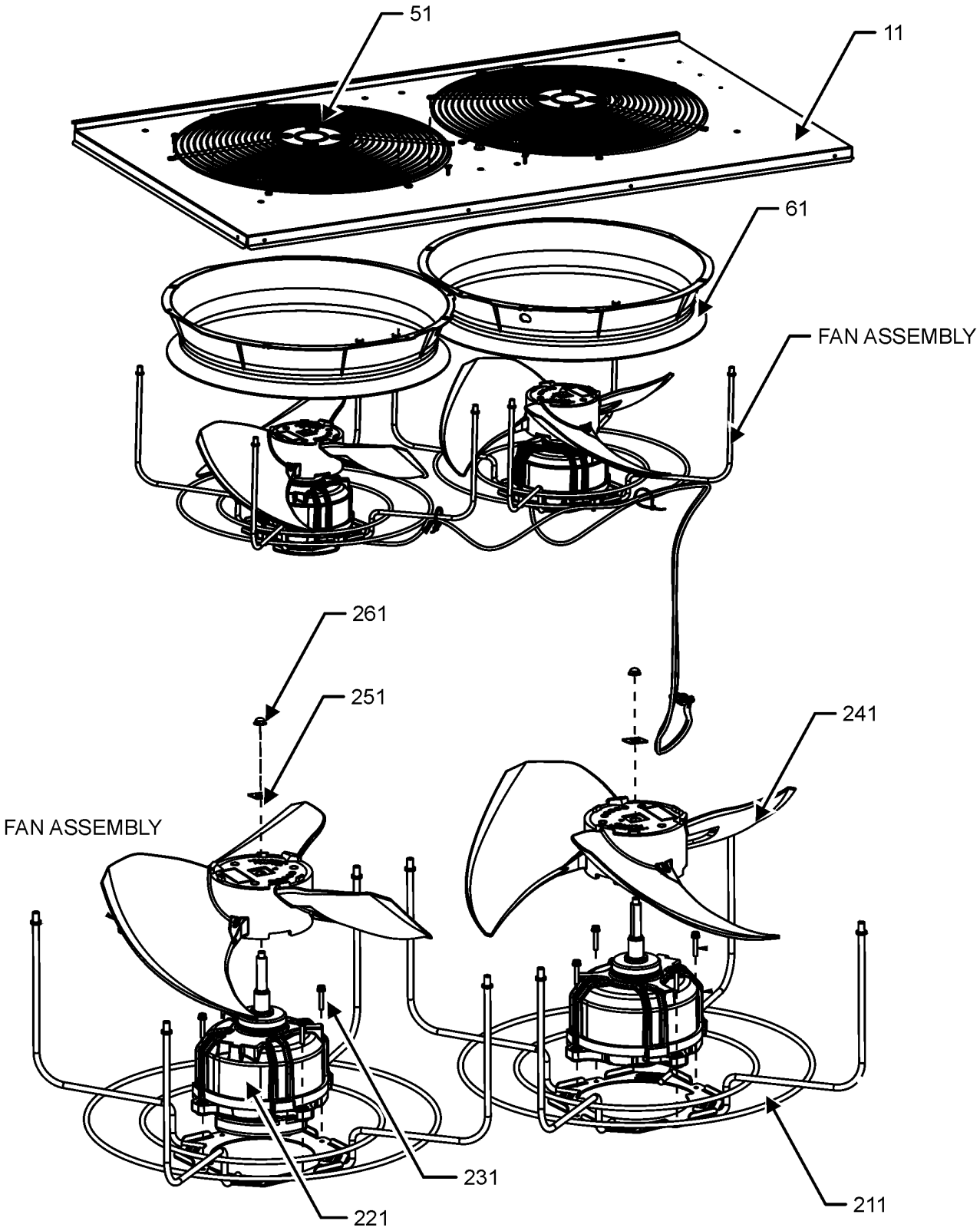

TOP PANEL OUTDOOR FAN ASSEMBLY MAY DIFFER FROM WHAT IS SHOWN

TOP PANEL OUTDOOR FAN ASSEMBLY

Ref. No:	Part No:	Description:	Ref. No:	Part No:	Description:
Image 1:					
11	0121L05191SB	PAINTED, TOP OUTDOOR			
51	0152G00000	FAN GRILLED RAISED (QTY 2)			
61	0161R00048	MOLDED RING VENTURI 22 (QTY 2)			
211	0163L00335	BRKT MOTOR SUPPORT (QTY 2)			
221	2P519551-2	DC Fan Motor, 230V (M1)			
221	2P557547-1	DC Fan Motor, 460V (M2)			
231	4P323661-35	HEXA HEAD TAPPING SCREW (QTY 8)			
241	3P379821-2	PROPELLER FAN (QTY 2)			
251	4P386173-1	FAN ROTATION STOPPER (QTY 2)			
261	4P388767-1	HEXAGON NUT (QTY 2)			
NS	0163M00084	HEX LOCKNUT NYLON INSERT (QTY 8)			
NS	0163M00004	SCREW #10X3/4 BLK (QTY 16)			
NS	M0274008	WASHER FLAT (QTY 8)			

Expanded Model Nomenclature

M1 - DVH1203D000001SAA
M2 - DVH1204D000001SAA

PARTITION ASSEMBLY

PARTITION ASSEMBLY

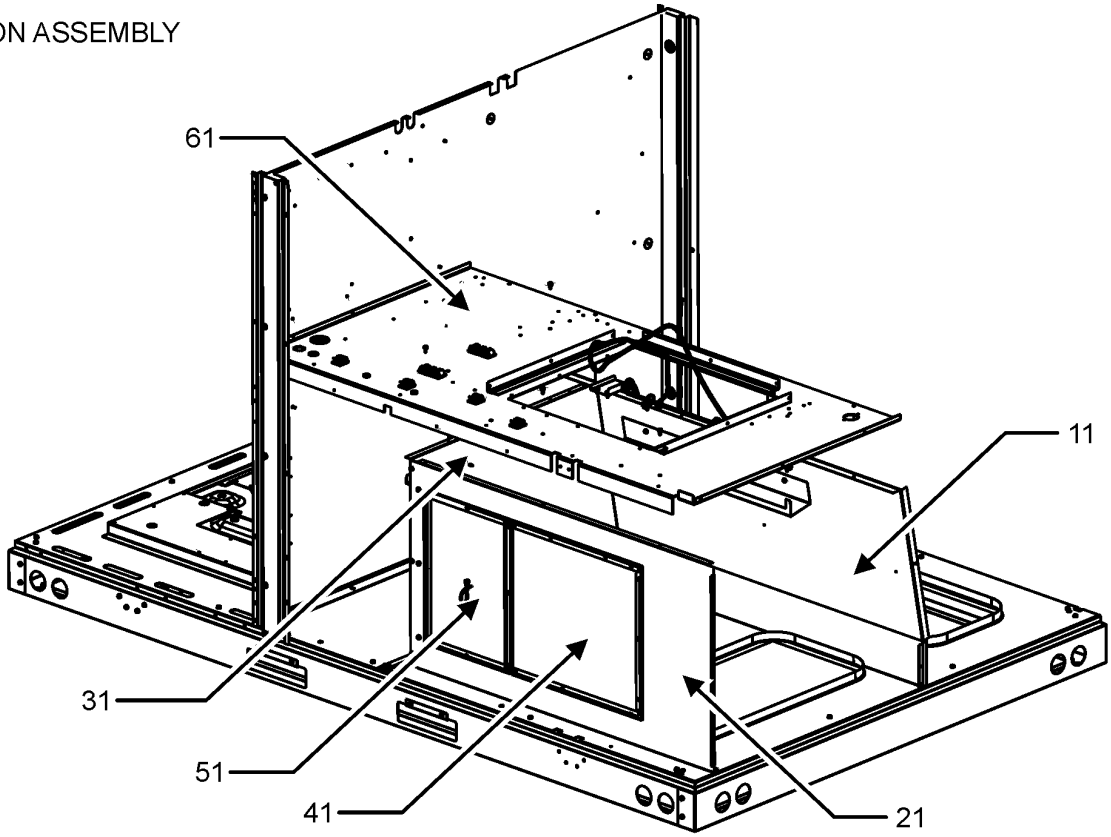

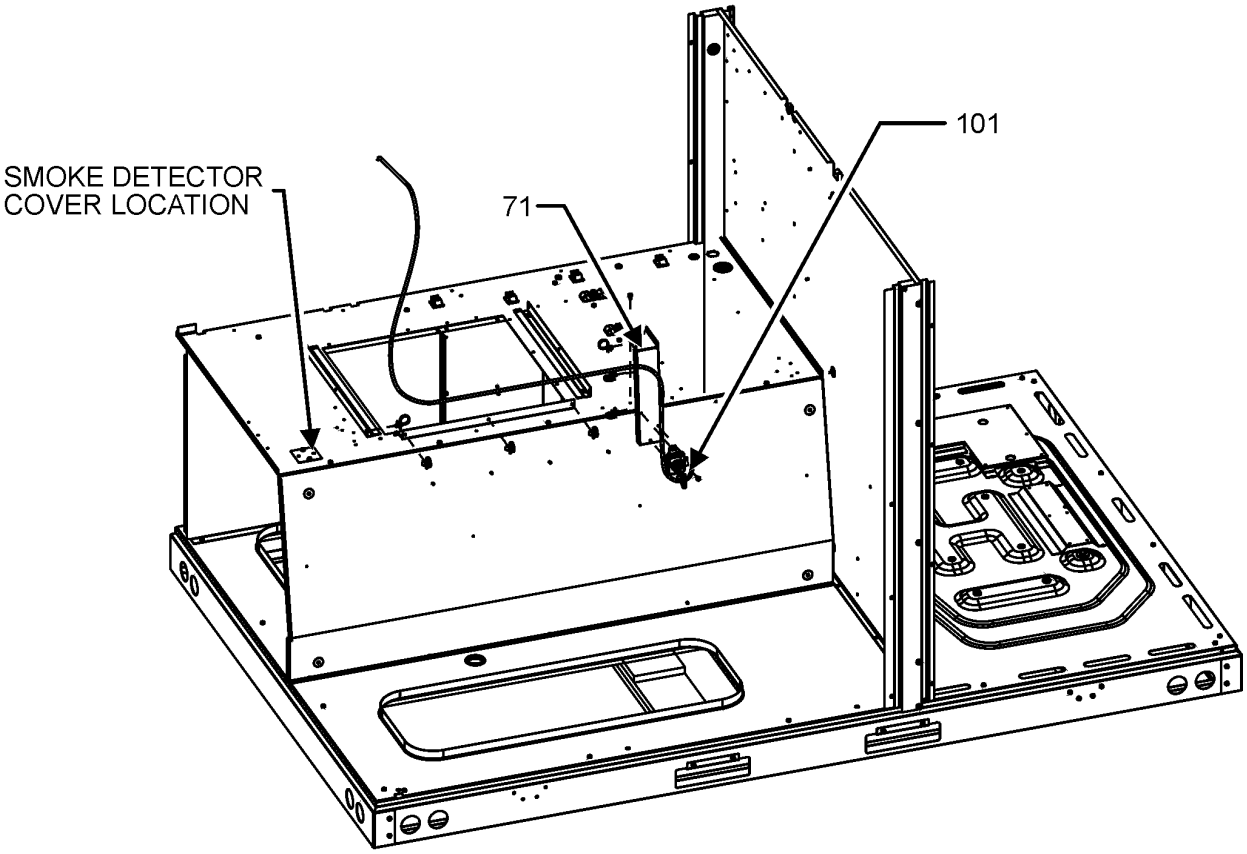

PARTITION ASSEMBLY MAY DIFFER FROM WHAT IS SHOWN

PARTITION ASSEMBLY

Ref. No:	Part No:	Description:	Ref. No:	Part No:	Description:
Image 1:					
11	0121L05504	PANEL BLOWER DECK BOTTOM			
21	0121L04010	PANEL FRONT EHK			
31	0121L04093	PNL SIDE EHK			
41	0121L04094	PNL COVER EHK			
51	0121L04095	PANEL BLOCK OFF EHK			
61	0121L05905	PNL BLOWER DECK			
71	0121L05309	BRACKET LEAK SENSOR			
101	SER2A08012	SENSOR			
NS	0121L00321	COVER SMOKE DETECTOR			

Expanded Model Nomenclature

M1 - DVH1203D000001SAA
M2 - DVH1204D000001SAA

CONDENSOR AND EVAPORATOR COIL ASSEMBLY

CONDENSOR AND EVAPORATOR COIL ASSEMBLY

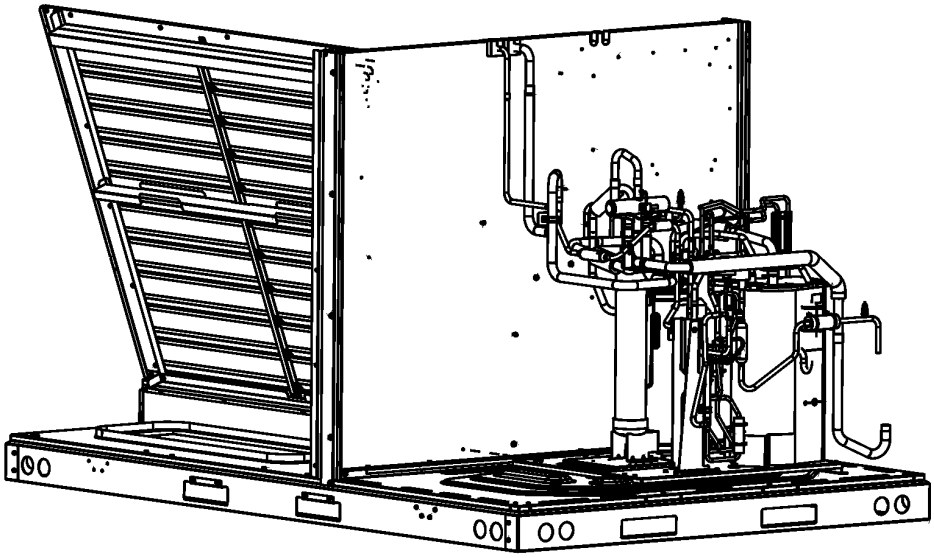

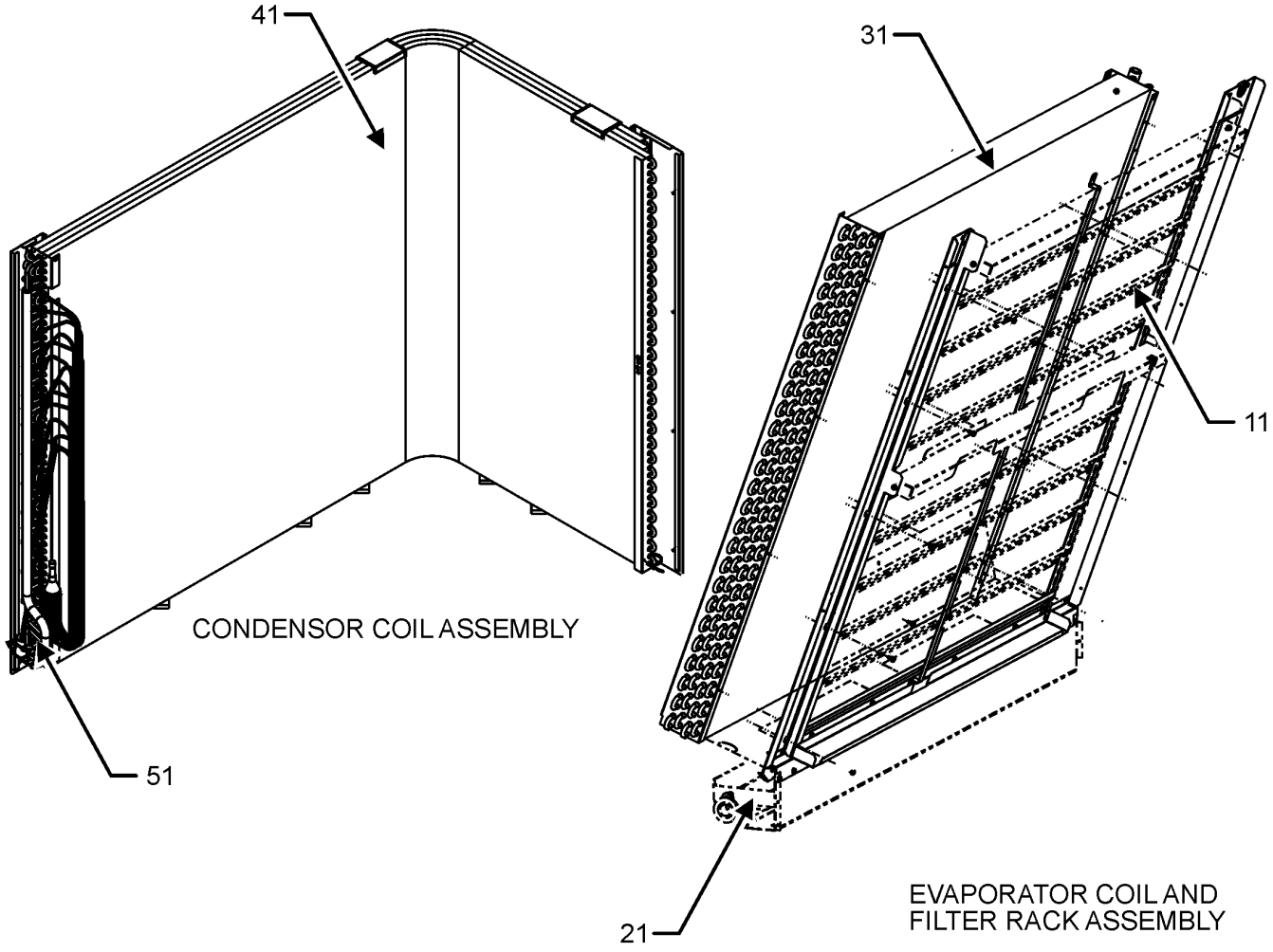

CONDENSOR AND EVAPORATOR COIL ASSEMBLY

Ref. No:	Part No:	Description:	Ref. No:	Part No:	Description:
Image 1:					
11	0270L03097	ASSY., FILTER RACK			
21	0161L00002	DRAIN PAN EVAP 7TO12			
31	0202L00661	ASSY EVAP COIL CIRCUITING			
41	0201L01065	ASSY BENT CONDENSER COIL			
51	4PA38890-1	THERMISTOR			
NS	0160L00137	AIR FILTER (QTY 2)			
NS	0160L00267	AIR FILTER (QTY 2)			
NS	0163L00071	DRAIN PLUG			
NS	0154L00180	GASKET DRAIN PAN			
NS	3P763107-1	THERMISTOR			

Expanded Model Nomenclature

M1 - DVH1203D000001SAA
M2 - DVH1204D000001SAA

COMPRESSOR AND OIL SEPARATOR ASSEMBLY

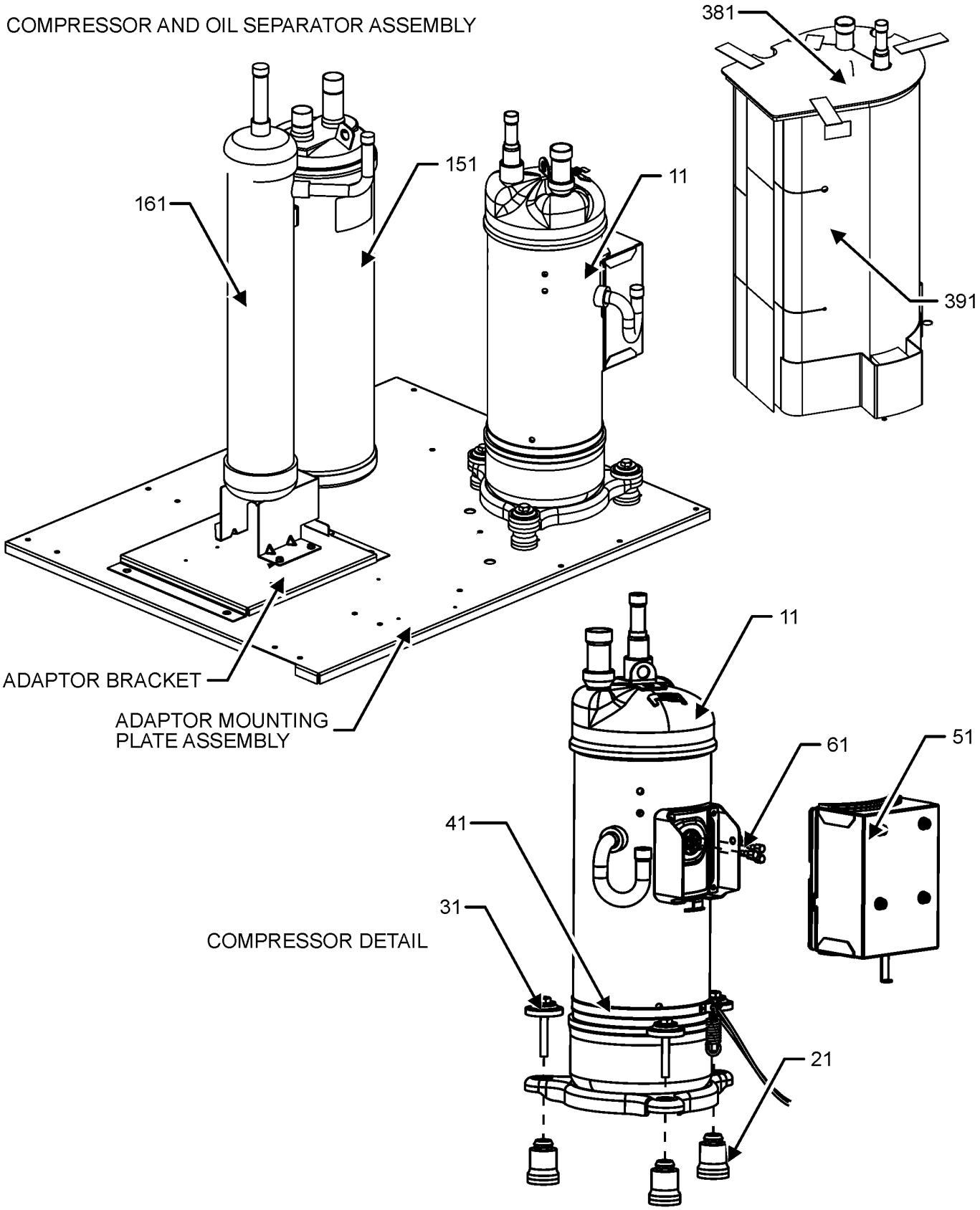

COMPRESSOR AND OIL SEPARATOR ASSEMBLY MAY DIFFER FROM WHAT IS SHOWN

COMPRESSOR AND OIL SEPARATOR ASSEMBLY

Ref. No:	Part No:	Description:	Ref. No:	Part No:	Description:

Image 1:

11	JP057BEAXMV-T	Compressor Inverter (230V) (M1)
11	JP057BEAYMR-T	Compressor Inverter (460V) (M2)
21	4PC08464-2	RUBBER VIBRATION ISOLATOR PRE (QTY 3)
31	4P413830-1	COMPRESSOR MOUNTING BOLT ASSY (QTY 3)
41	3P148066-7	CRANK CASE HEATER
51	2P640452-2	TERMINAL BOX ASSY (230V) (M1)
51	2P548156-3	TERMINAL BOX ASSY (460V) (M2)
61	4PC07830-1	BOLT, TERMINAL CONNECTOR (M1)
151	0151L00300	ACCUMULATOR
161	3P456107-1	OIL SEPARATOR ASSY
381	3P650111-1	COMP.SOUNDPROOF(160P)
391	2P651423-1	COMP.SOUNDPROOF(160P)
NS	0163M00063	INSERT-HEX NUT 3/8-16

Expanded Model Nomenclature

M1 - DVH1203D000001SAA
M2 - DVH1204D000001SAA

OIL SEPARATOR DISCHARGE TUBE ASSEMBLY

OIL SEPARATOR DISCHARGE TUBE ASSEMBLY

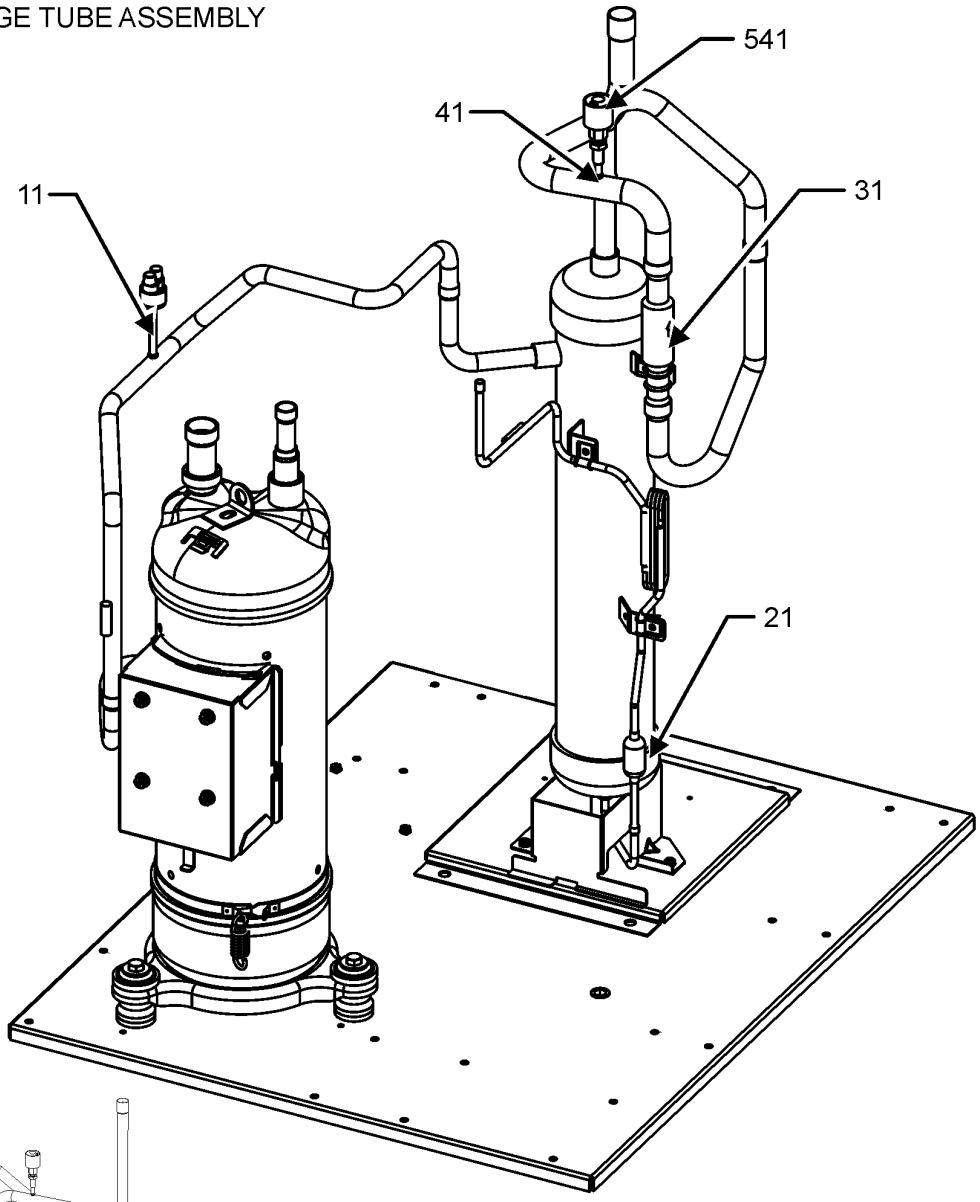

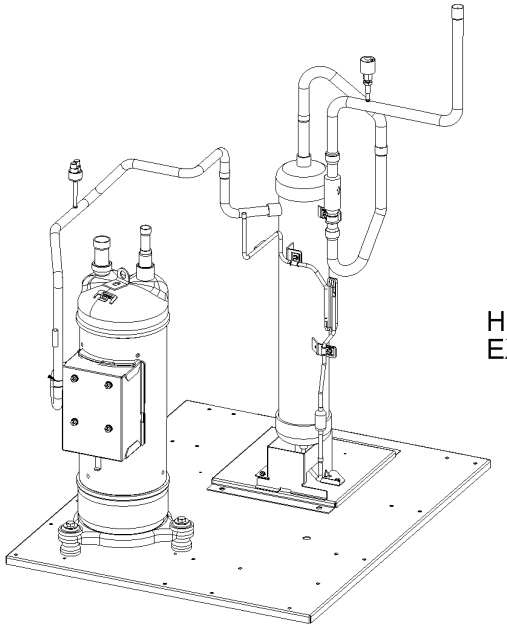

HOT GAS REHEAT
EXAMPLE DESIGN

OIL SEPARATOR DISCHARGE TUBE ASSEMBLY
MAY DIFFER FROM WHAT IS SHOWN

OIL SEPARATOR DISCHARGE TUBE ASSEMBLY

Ref. No:	Part No:	Description:	Ref. No:	Part No:	Description:
Image 1:					
11	3S581008-1	HIGH PRESSURE SWITCH			
21	3P277773-11	FILTER			
31	3SA27024-1	CHECK VALVE			
41	3SA58023-2	GAGE PORT WITH CHECK VALVE			
541	3S481002-1	PRESSURE SENSOR, NSK			
NS	B1373315	ACCESS FITTING (QTY 2)			
NS	0163M00629	CAP, WITH O-RING (QTY 2)			

Expanded Model Nomenclature

M1 - DVH1203D000001SAA
M2 - DVH1204D000001SAA

REVERSING VALVE ASSEMBLY

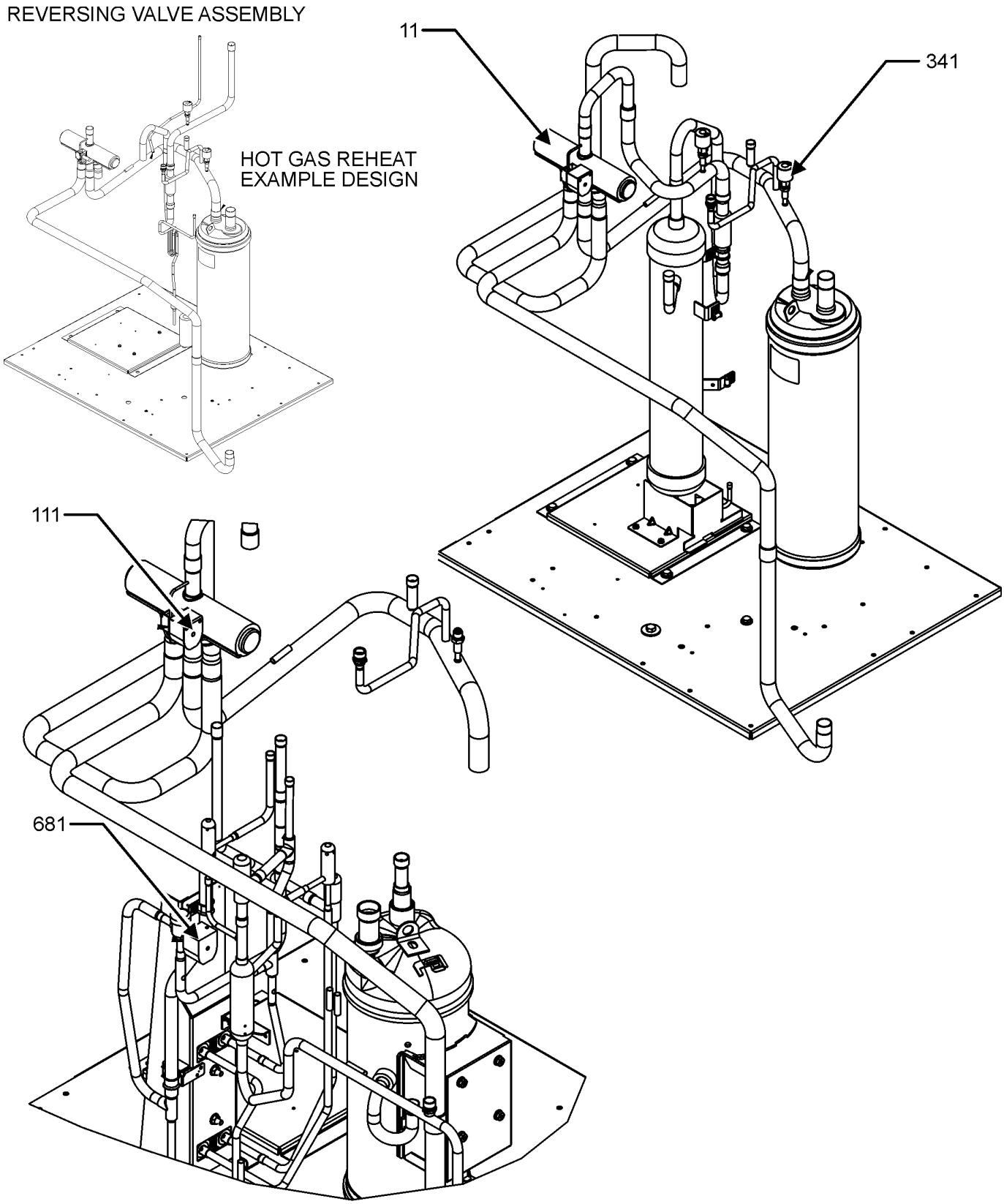

REVERSING VALVE ASSEMBLYMAY DIFFER FROM WHAT IS SHOWN

REVERSING VALVE ASSEMBLY

Ref. No:	Part No:	Description:	Ref. No:	Part No:	Description:
Image 1:					
11	3SA52119-1	FOUR WAY VALVE BODY			
111	3P353634-5	FOUR WAY VALVE COIL			
341	3S481001-3	PRESSURE SENSOR, LOW			
681	3P384150-3	SOLENOID VALVE COIL			
NS	4SA27011-1	CHECK VALVE			
NS	3SA58023-2	GAGE PORT WITH CHECK VALVE			
NS	3S500031-1	MOTOR OPERATED VALVE BODY			
NS	3SA50100-1	MOTOR OPERATED VALVE BODY			
NS	3SA50100-1	MOTOR OPERATED VALVE BODY			
NS	3S500041-1	MOTOR OPERATED VALVE BODY UKV-			
NS	3S510009-1	PRESSURE CONTROL VAIVE			
NS	3SA52069-1	SOLENOID VALVE			

Expanded Model Nomenclature

M1 - DVH1203D000001SAA
M2 - DVH1204D000001SAA

EEV / SOLENOID COILS ASSEMBLY

EEV / SOLENOID COILSASSEMBLY

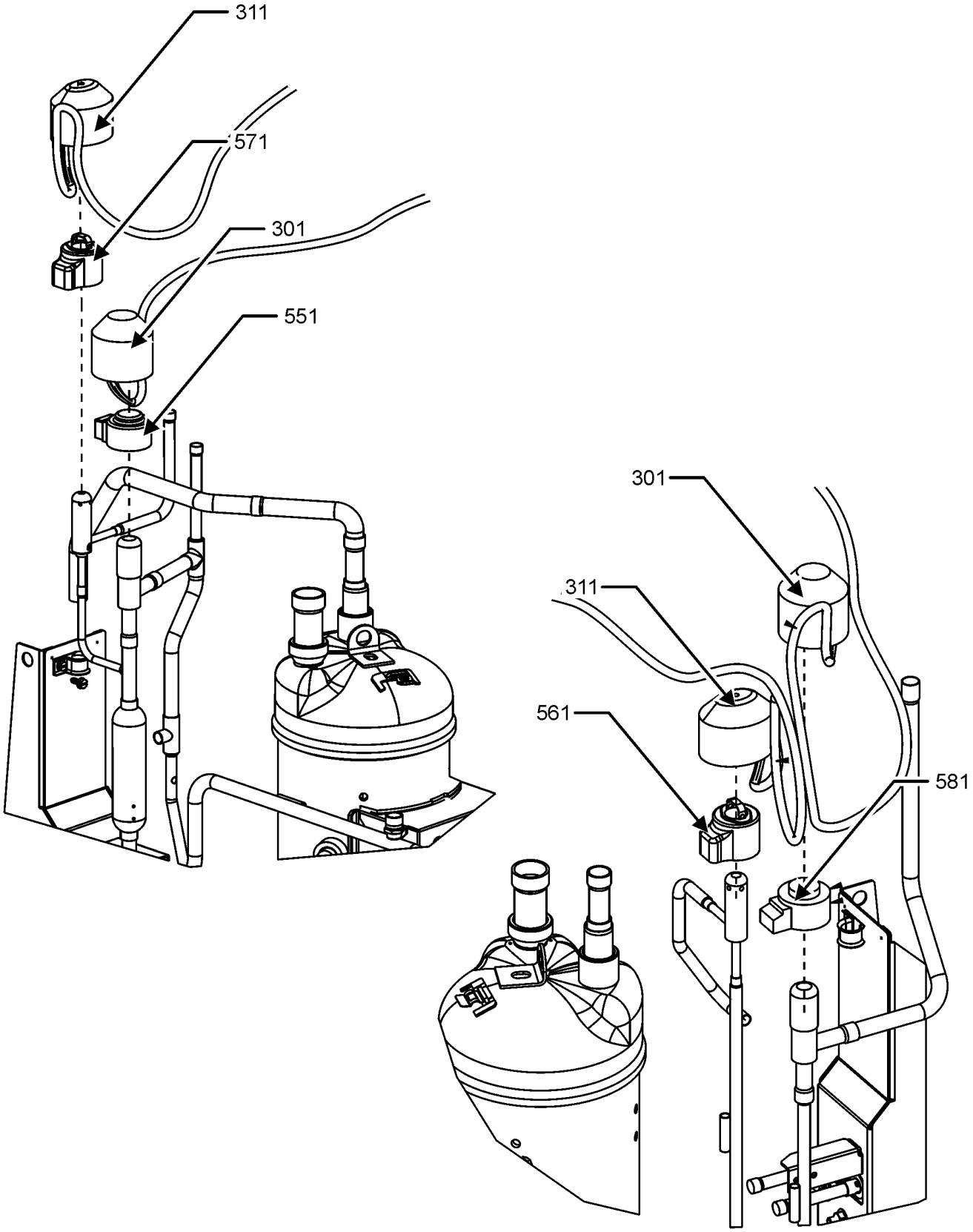

EEV / SOLENOID COILS ASSEMBLY MAY DIFFER FROM WHAT IS SHOWN

EEV / SOLENOID COILS ASSEMBLY

Ref. No:	Part No:	Description:	Ref. No:	Part No:	Description:
Image 1:					
301	4P467985-1	PROTECTION CAP (QTY 2)			
311	4PA55176-1	WATER PROOF CAP (QTY 2)			
551	3P377345-4	MOTOR OPERATED VALVE COIL			
561	3P169502-15	MOTOR OPERATED VALVE COIL			
571	3P383937-4	MOTOR OPERATED VALVE COIL			
581	3P383937-6	MOTOR OPERATED VALVE COIL			
NS	3P763103-1	THERMISTOR			
NS	3P763104-1	THERMISTOR			
NS	3P763105-1	THERMISTOR			
NS	3P763106-1	THERMISTOR			
NS	3P787032-1	THERMISTOR			

Expanded Model Nomenclature

M1 - DVH1203D000001SAA
M2 - DVH1204D000001SAA

BLOWER ASSEMBLY

BLOWER ASSEMBLY

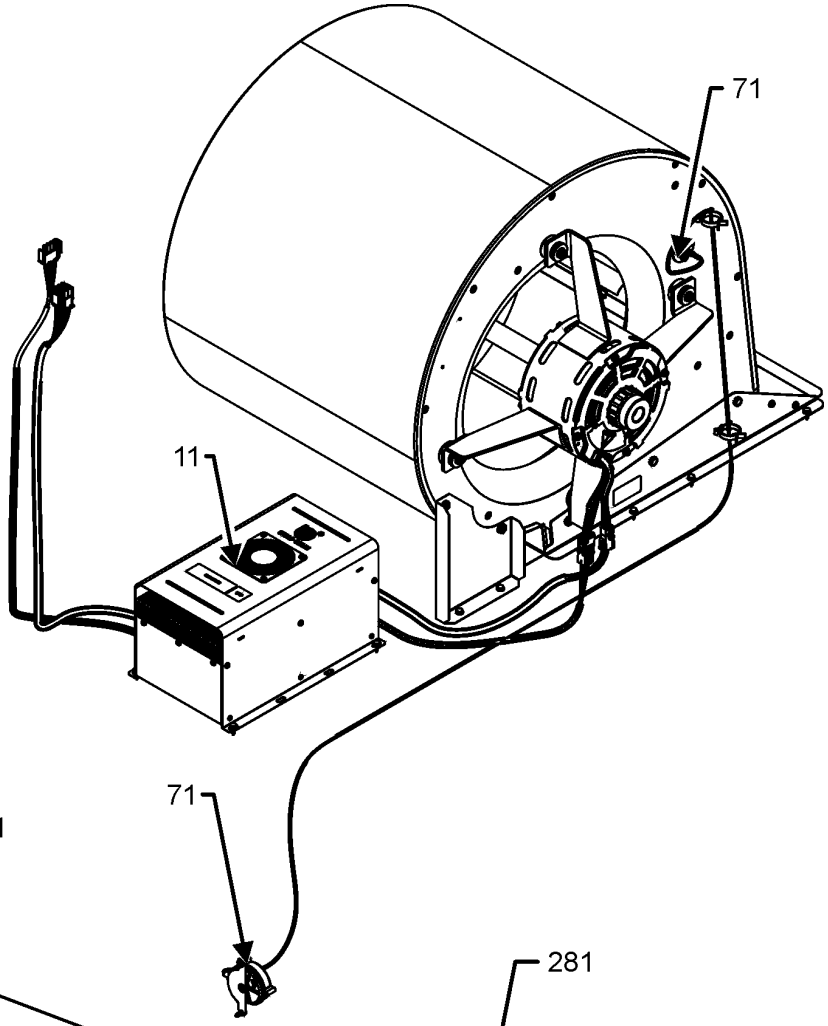

BLOWER MOTOR ASSEMBLY

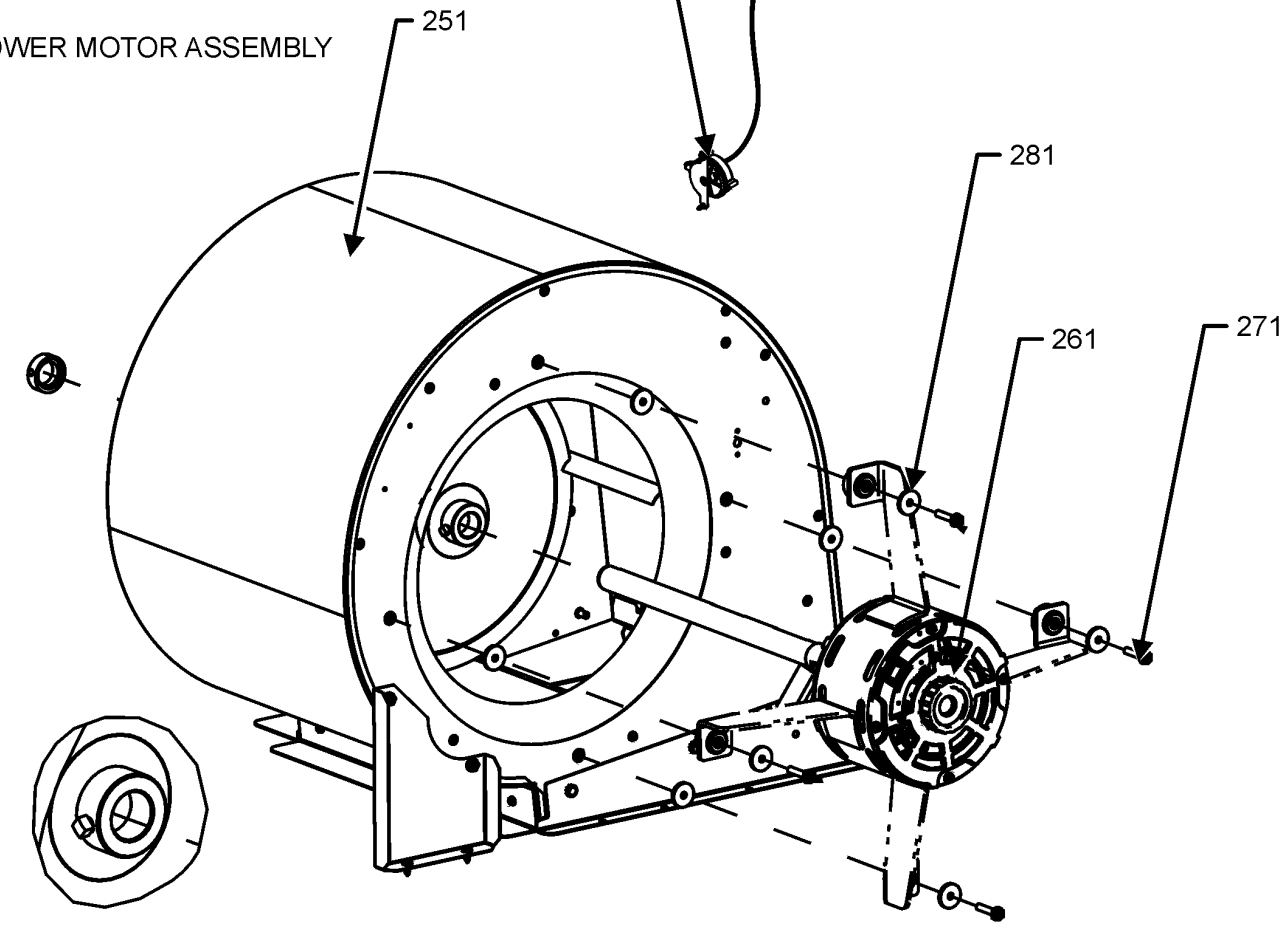

BLOWER ASSEMBLY MAY DIFFER FROM WHAT IS SHOWN

BLOWER ASSEMBLY

Ref. No:	Part No:	Description:	Ref. No:	Part No:	Description:
Image 1:					
11	0131L00463MCSA	PROGRAMMED MOTOR CONTROLLER (M1)			
11	0131L00463MCSB	PROGRAMMED MOTOR CONTROLLER (M2)			
71	0130F00647	PRESSURE SWITCH			
251	0271L00148	ASSY BLOWER PURCHASED 16X18			
261	0131L00122	MOTOR, BLOWER 208/230V (M1)			
261	0131L00124	MOTOR, BLOWER 460V (M2)			
271	M0250565	SCREW 1/4-1 1/4 (QTY 4)			
281	B1392918	WASHER, FLAT (QTY 8)			

Expanded Model Nomenclature

M1 - DVH1203D000001SAA
M2 - DVH1204D000001SAA

CONTROL BOX ASSEMBLY INDOOR

CONTROL BOX ASSEMBLY INDOOR

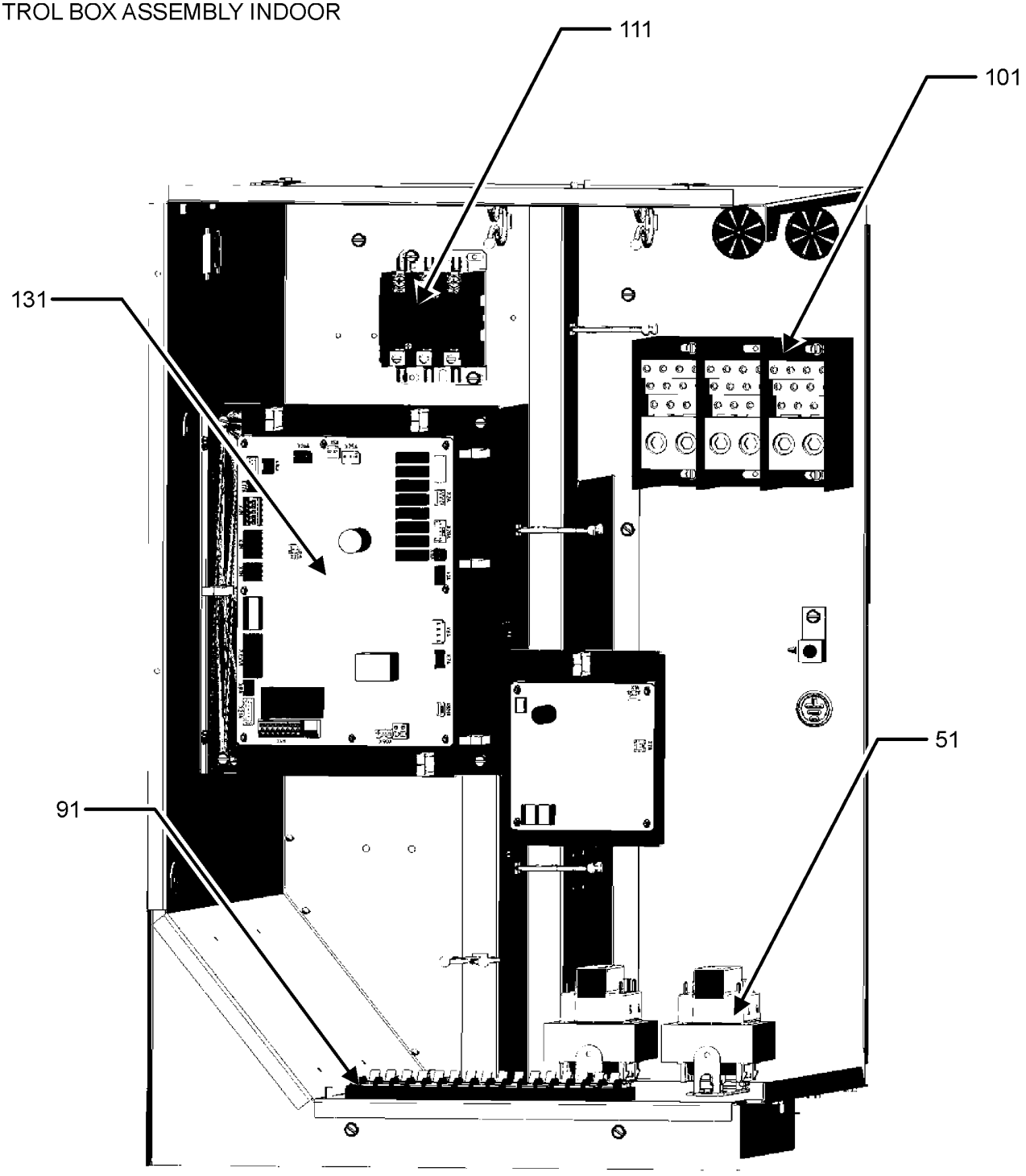

CONTROL BOX ASSEMBLY INDOOR MAY DIFFER FROM WHAT IS SHOWN

CONTROL BOX ASSEMBLY INDOOR

Ref. No:	Part No:	Description:	Ref. No:	Part No:	Description:
Image 1:					
51	0130L00406	TRANSFORMER (M1)			
51	0130M00858	TRANSFORMER (M2)			
91	2P817301-1	TERMINAL STRIP			
101	0130L00217	POWER,BLOCK			
111	CONT3P030024D	CONT, 3 POLE, 30 AMP, 24VAC			
131	2P734448-1	ID PCB ASSY(EB23001)			
NS	2P613983-4	BACNET MS/TP ADAPTOR			
NS	3P618962-5	PROGRAM DATA TABLE			
NS	3P826040-2	PROGRAM DATA TABLE			
NS	3P826041-2	PROGRAM DATA TABLE			

Expanded Model Nomenclature

M1 - DVH1203D000001SAA
M2 - DVH1204D000001SAA

CONTROL BOX ASSEMBLY OUTDOOR

CONTROL BOX ASSEMBLY OUTDOOR

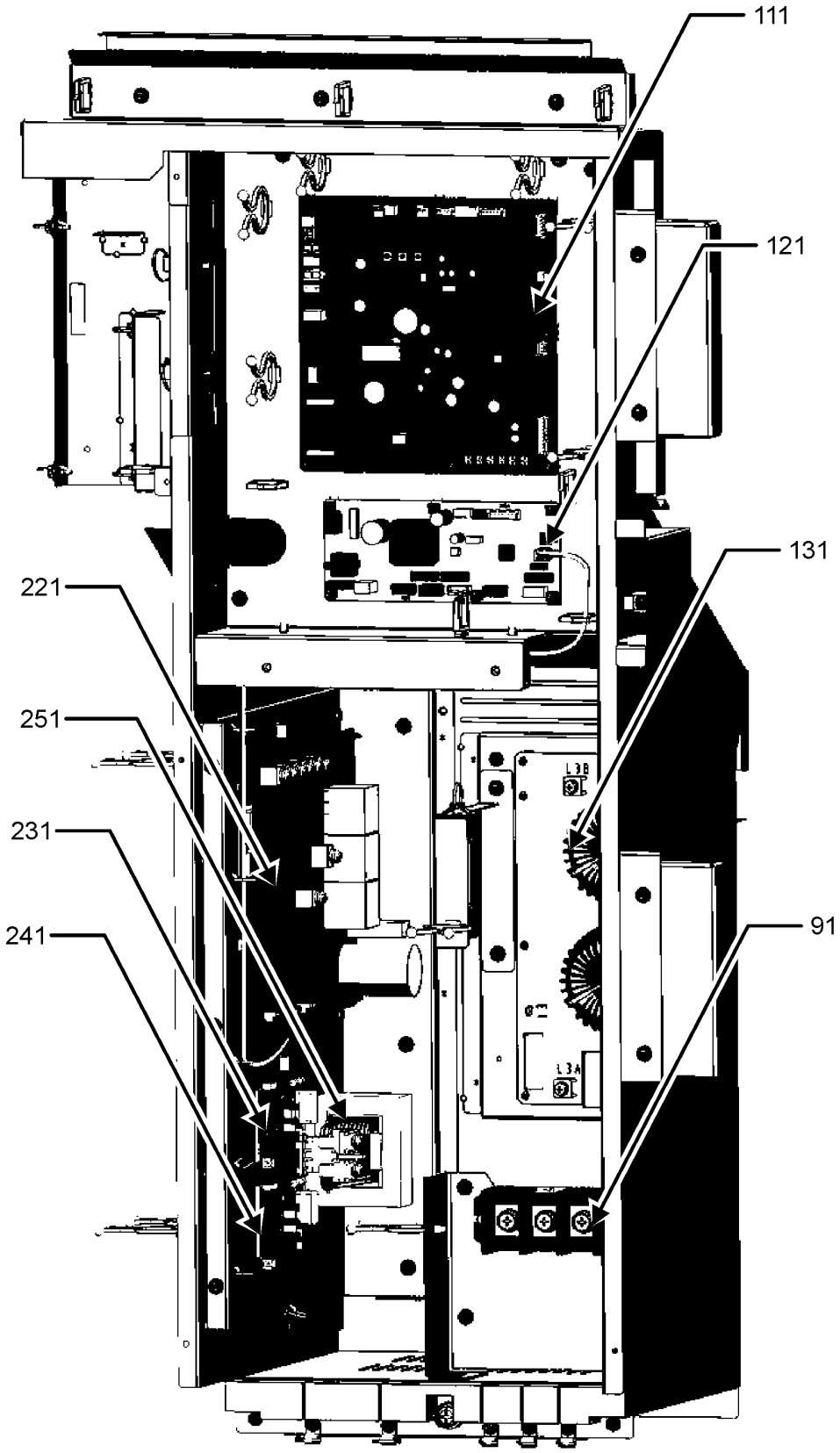

CONTROL BOX ASSEMBLY OUTDOOR MAY DIFFER FROM WHAT IS SHOWN

CONTROL BOX ASSEMBLY OUTDOOR

Ref. No:	Part No:	Description:	Ref. No:	Part No:	Description:
Image 1:					
91	3P317381-32	TERMINAL STRIP HP-T4056A-1-3P-			
111	2P682598-78	PCB ASSY			
121	2P589391-13	SUB PCB			
131	3P513688-2	NOISE FILTER (460) (M2)			
131	3P257226-2	NOISE FILTER PCB 230V (M1)			
221	2P756502-1	INVERTER ASSEMBLY (460V) (M2)			
221	2P798207-1	INVERTER ASSEMBLY 230V (M1)			
231	2P800833-2	FAN INVERTER ASSEMBLY 230V (M1)			
231	012P728188-19	FAN PCB ASSEMBLY (460V) (M2)			
241	2P800834-2	PCB,FAN INVERTER ASSEMBLY 460V (M2)			
251	3E750497-1-KA	REACTOR (230V) (M1)			
251	3E750560-1	REACTOR (460V) (M2)			
NS	20333401	GROMMET-HORSESHOE			
NS	3S474001-1	LOW FREQUENCY TRANSFORMER (M2)			
NS	3P787032-1	THERMISTOR			

Expanded Model Nomenclature

M1 - DVH1203D000001SAA
M2 - DVH1204D000001SAA

ACCESSORY PARTS LIST

NOTE: NOT ALL OPTIONS AVAILABLE FOR ALL PRODUCTS

FOR ACCESSORY PARTS SEE THE FOLLOWING PART MANUAL

RP-FIOPMC

ACCESSORY PARTS LIST

Ref. No:	Part No:	Description:	Ref. No:	Part No:	Description:
Image 1:					
NS	RP-FIOPM*	ACCESSORY RP MANUAL			

Expanded Model Nomenclature

M1 - DVH1203D000001SAA
M2 - DVH1204D000001SAA