REPAIR PARTS

DHC 12.5 Ton Commercial Package Cooling Unit

DHC1503D000001SAA
DHC1504D000001SAA
DHC1507D000001SAA

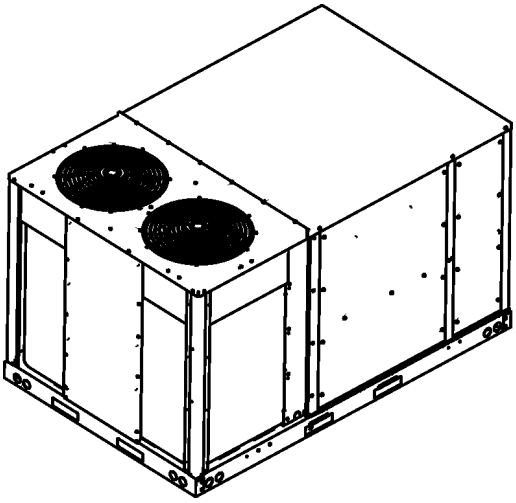

This manual is to be used by qualified technicians only.

© 2024 DAIKIN COMFORT TECHNOLOGIES MANUFACTURING, L.P. ◊ 19001 Kermier Rd. ◊ Waller, TX 77484

Index

Functional Parts List 3

Illustration and Parts ..... 4 - 15

Views shown are for parts illustrations only, not servicing procedures.

Text Codes:

AR - As Required
NA - Not Available
NS - Not Shown
00000000 - See Note
QTY - Quantity Example (QTY 3) (If Quantity not shown, Quantity = 1)
M - Model Example (M1) (If M Code not shown, then part is used on all Models)

Expanded Model Nomenclature:

Example
M1 - Model#1
M2 - Model#2
M3 - Model#3

Daikin Comfort Technologies Manufacturing , L.P. is not responsible for personal injury or property damage resulting from improper service. Review all service information before beginning repairs.

Warranty service must be performed by an authorized technician, using authorized factory parts. If service is required after the warranty expires, Daikin Comfort Technologies Manufacturing , L.P. also recommends contacting an authorized technician and using authorized factory parts.

Daikin Comfort Technologies Manufacturing , L.P. reserves the right to discontinue, or change at any time, specifications or designs without notice or without incurring obligations.

For assistance within the U.S.A. contact:
Equipment Support
Daikin Comfort Technologies Manufacturing , L.P.
19001 Kermier Road
Waller, Texas 77484
855-770-5678-Telephone
713-863-2382-Facsimile

For assistance outside the U.S.A. contact:
International Division
Daikin Comfort Technologies Manufacturing , L.P.
19001 Kermier Road
Waller, Texas 77484
713-861-2500-Telephone
713-863-2382-Facsimile

Functional Parts

Part No:	Description:
0130M00913	AUXILLARY SWITCH (QTY 2)
0131L00125	BLOWER MOTOR (M3)
0131L00124	BLOWER MOTOR (M2)
0131L00122	BLOWER MOTOR (M1)
0130L00164	CLASS CC FUSE 5A (M3)
YP61K1TTF5ASH	COMPRESSOR (M1)
YP61K1TTFDASH	COMPRESSOR (M2)
YP61K1TTFEASH	COMPRESSOR (M3)
CONT2P030024D	CONT, 2 POLE, 30 AMP, 24VAC
CONT3P030024D	CONT, 3 POLE, 30 AMP, 24VAC (QTY 3)
0130M00178	DPDT RELAY 24VAC (QTY 3)
0131M00905	MOTOR (M1, M3)
0131M00917	MOTOR (M2)
PCBCM301V0001	PCB CONTROL AIR HANDLER
0131L00156	PROGRAMMED MOTOR CONTROLLER
10135604	RELAY
SER2A08012	SENSATA R32 SENSOR
0130M00730	SWITCH, HIGH PRESSURE (QTY 2)
0130M00733	SWITCH, LOW PRESSURE (QTY 2)
0130M00582	SWITCH, THERMO (QTY 2)
B1370772	TIME DELAY ICM 180SEC DELA (QTY 2)
0130M00669	TRANSFORMER (M3)
0130M00858	TRANSFORMER (M2)
0130M00859	TRANSFORMER (M1)
0130M00861	TRANSFORMER (M3)
0259L02404	WIRE HARENESS ASSEMBLY (M3)
0259L02403	WIRE HARNESS ASSY (M3)

SPECIAL PARTS

RP-FIOPM*	ACCESSORY RP MANUAL
RP-EHX(D/B)M*	HEATER KIT RP MANUAL
RP-EHS(D/B)M*	HEATER KIT RP MANUAL

Expanded Model Nomenclature

M1 - DHC1503D000001SAA
M2 - DHC1504D000001SAA
M3 - DHC1507D000001SAA

CABINET ASSEMBLY

CABINET ASSEMBLY

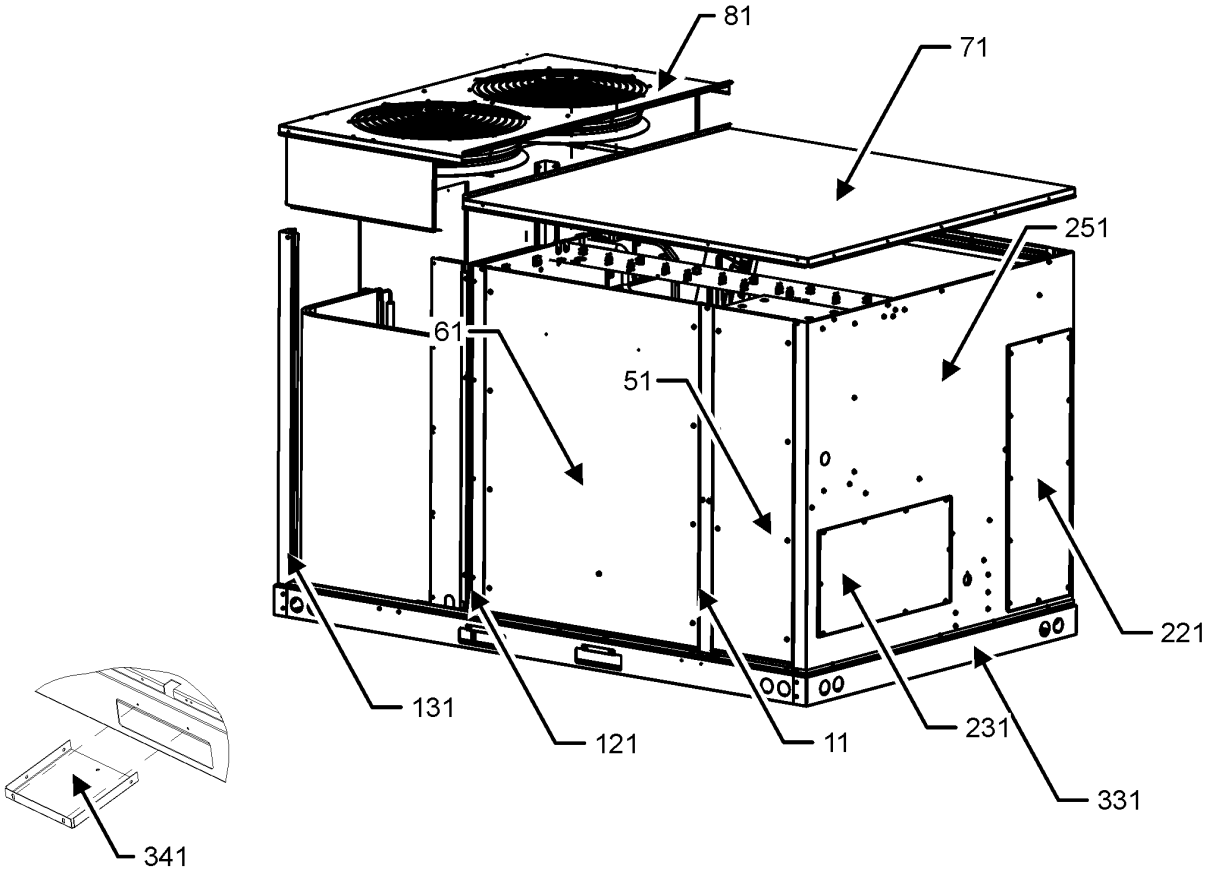

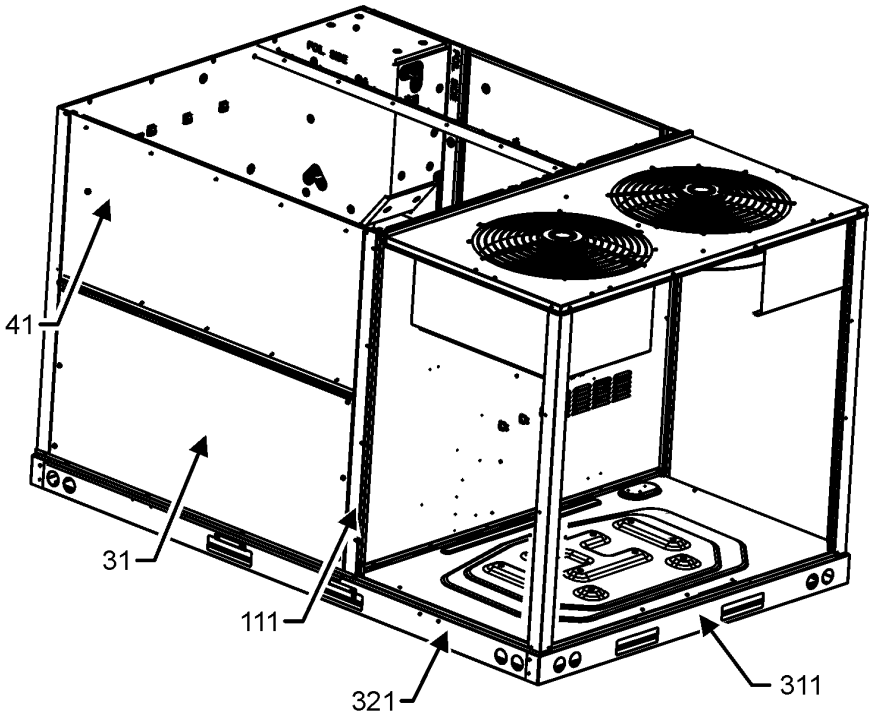

CABINET ASSEMBLY
MAY DIFFER FROM
WHAT IS SHOWN

CABINET ASSEMBLY

Ref. No:	Part No:	Description:	Ref. No:	Part No:	Description:
Image 1:					
11	0121L03534SB	PAINTED, PANEL, SIDE POST			
31	0121L04312SB	PAINTED, ECONOMIZER PANEL			
41	0121L03173SB	PAINTED, FILTER DOOR			
51	0121L03052SB	PAINTED CONTROL PANEL			
61	0121L03961SB	PAINTED, PANEL-BLOWER			
71	0121L04551SB	PAINTED, PANEL, TOP INDOOR			
81	0121L05353SB	PAINTED, PANEL, TOP OUTDOOR			
111	0121L03470SB	PAINTED SIDE POST			
121	0121L03534SB	PAINTED SIDE POST			
131	0121L05619SB	PAINTED, PANEL, CORNER POST (QTY 2)			
221	0121L03508SB	PAINTED COVER DUCT RETURN			
231	0121L02921SB	PAINTED COVER DUCT SUPPLY			
251	0121L03508SB	PAINTED, COVER, DUCT, PANEL			
311	0121L04565	END RAIL			
321	0121L04764	SIDE RAIL (QTY 2)			
331	0121L05103	RAIL, END			
341	0121L03727	BRACKET-FORK BOARD (QTY 4)			
NS	0141L00084	BOARD FORK (QTY 2)			
NS	0121L04612SB	PAINTED COVER-DISC SWITCH			
NS	0121L03958SB	PAINTED, DRAIN PAN COVER			
NS	0121L03932SB	PNT, CONVENIENCE COVER LT COMM			

Expanded Model Nomenclature

M1 - DHC1503D000001SAA
M2 - DHC1504D000001SAA
M3 - DHC1507D000001SAA

TOP PANEL AND TUBING ASSEMBLY

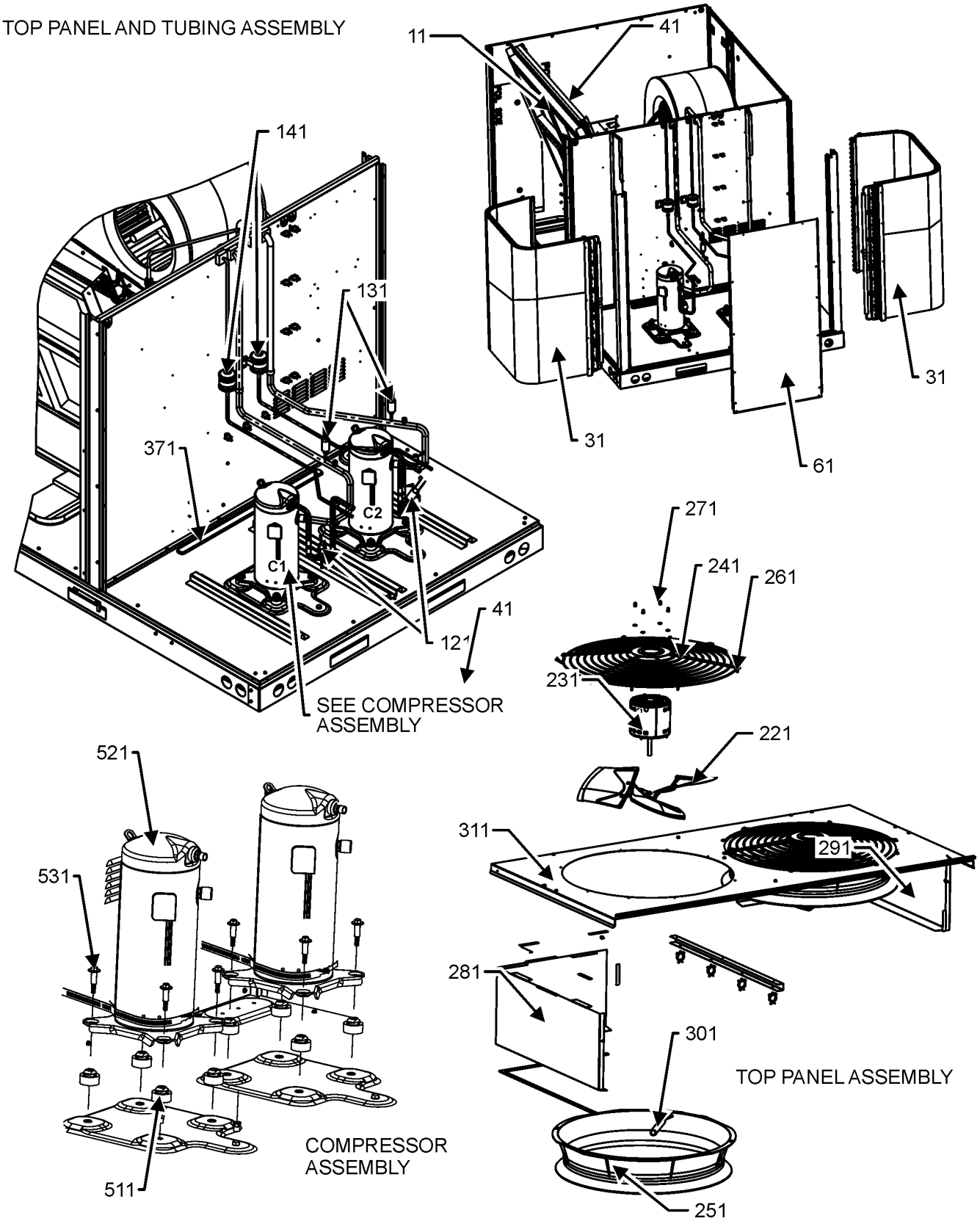

TOP PANEL AND TUBING ASSEMBLY MAY DIFFER FROM WHAT IS SHOWN

TOP PANEL AND TUBING ASSEMBLY

Ref. No:	Part No:	Description:	Ref. No:	Part No:	Description:

Image 1:

11	0270L02975	FILTER RACK ASSEMBLY
31	0201L00453	ASSY., CONDENSER COIL (QTY 2)
41	0202L00737	EVAP COIL CIRCUITING ASSEMBLY
61	0121L05658SB	PAINTED, PANEL, OUTDOOR
121	0130M00730	SWITCH, HIGH PRESSURE (QTY 2)
131	0130M00733	SWITCH, LOW PRESSURE (QTY 2)
141	0151M00106	FILTER/DRIER-BI-FLOW (QTY 2)
221	0150L00003	BLADE-FAN 22" ALUM. CCW 30 DEG (QTY 2)
231	0131M00905	MOTOR (M1, M3)
231	0131M00917	MOTOR (M2)
241	0152G00000	FAN GRILLE, RAISED (QTY 2)
251	0161R00048	MOLDED RING VENTURI 22 (QTY 2)
261	0163M00004	SCREW #10X3/4 BLK (QTY 16)
271	B1393024	LOCK NUT (M2)
271	0163M00006P	NUT, ACORN 5/16 HEX BLACK (M1, M3)
301	0161R00124	CONDUIT (M1, M3)
311	0121L05353SB	PAINTED, PANEL, TOP OUTDOOR
371	0121L04115	CHANNEL, BASEPAN
511	B1339533	GROMMET, COMPRESSOR (QTY 8)
521	YP61K1TTF5ASH	COMPRESSOR (M1)
521	YP61K1TTFDASH	COMPRESSOR (M2)
521	YP61K1TTFEASH	COMPRESSOR (M3)
531	B1393740	COMP BOLT & SLEEVE (QTY 8)
NS	0160L00267	AIR FILTER (QTY 4)
NS	0121R00922	BRACKET, MOTOR MOUNT (M2)
NS	20333401	GROMMET-HORSESHOE (QTY 4)
NS	0159L00066	HARNESS, COMP SCROLL (M2, M3)
NS	0159L00068	HARNESS, COMP SCROLL (M1)
NS	0159L00153	HARNESS, COMP SCROLL (M2, M3)
NS	0159L00154	HARNESS, COMP SCROLL (M1)
NS	B1393804	NYLON LOCKNUT, .31 - 18 (M2)
NS	0163M00129	SCREW H2 .31 X 1.52 (M2)
NS	0130M00582	SWITCH, THERMO (QTY 2)
NS	0251L00269	TXV, & FLOWRATOR ASSY
NS	0251L00270	TXV, & FLOWRATOR ASSY
NS	M0272803	WASHER LOCK (M1, M3)
NS	0163M00005P	WASHER, BLACK .50OD.218ID (M1, M3)

Expanded Model Nomenclature

M1 - DHC1503D000001SAA
M2 - DHC1504D000001SAA
M3 - DHC1507D000001SAA

PARTITION ASSEMBLY

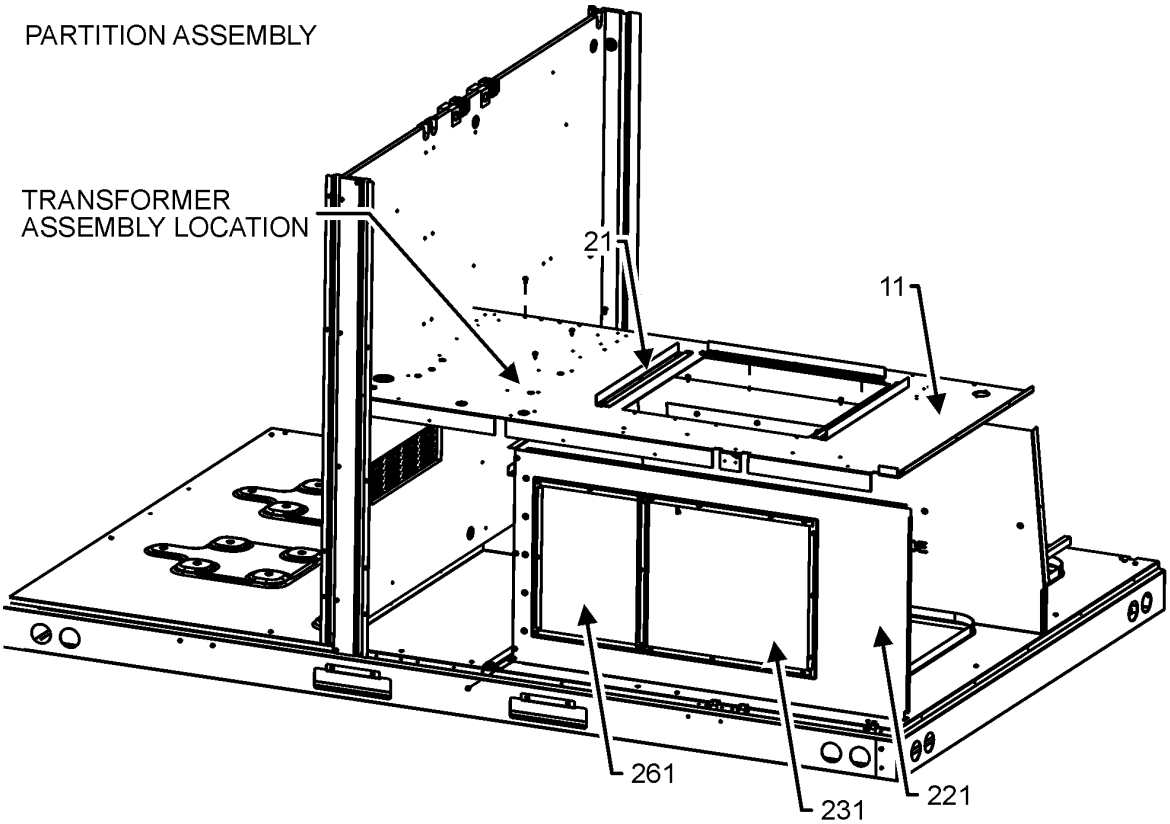

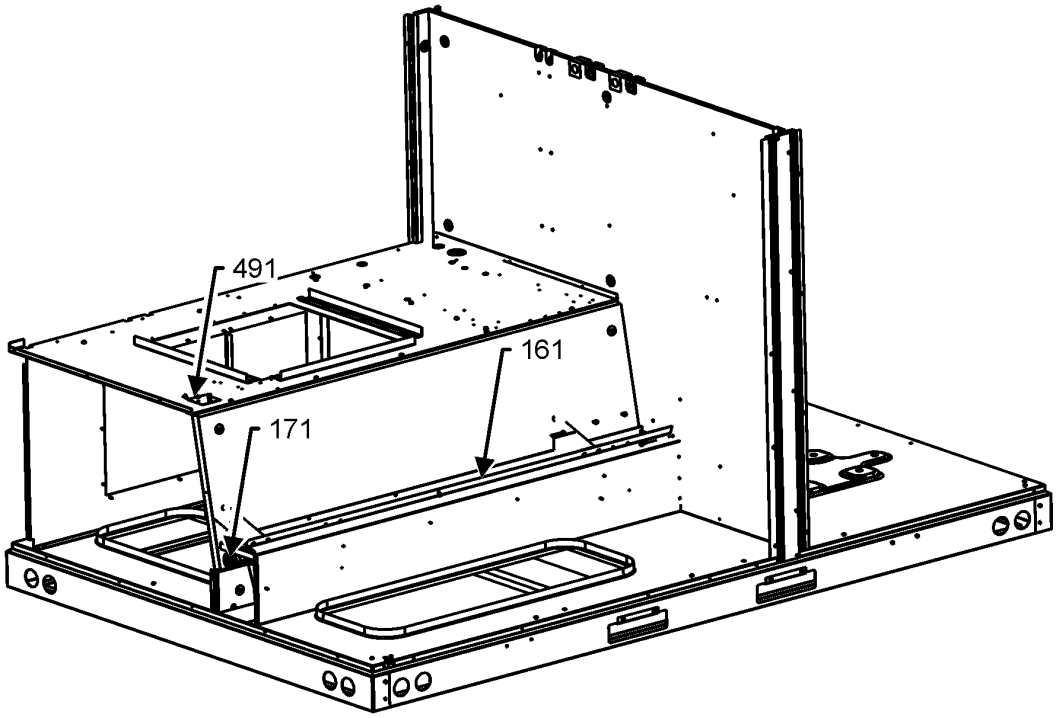

PARTITION ASSEMBLY MAY DIFFER FROM WHAT IS SHOWN

PARTITION ASSEMBLY

Ref. No:	Part No:	Description:	Ref. No:	Part No:	Description:
Image 1:					
11	0121L05380	PANEL, BLOWER DECK			
21	0121L05524	BLOWER SLIDE PLATE (QTY 3)			
161	0161L00002	DRAIN PAN EVAP 7TO12			
171	0154L00180	GASKET, DRAIN PAN			
221	0121L04010	PANEL FRONT, EHK			
231	0121L03965	PNL, COVER EHK			
261	0121L03458	PANEL EHK BLOCK OFF			
491	0121L00321	COVER SMOKE DETECTOR			
NS	0130L00164	CLASS CC FUSE 5A (M3)			
NS	0163L00071	PLUG, DRAIN			
NS	0130M00669	TRANSFORMER (M3)			
NS	0259L02404	WIRE HARENESS ASSEMBLY (M3)			
NS	0259L02403	WIRE HARNESS ASSY (M3)			

Expanded Model Nomenclature

M1 - DHC1503D000001SAA
M2 - DHC1504D000001SAA
M3 - DHC1507D000001SAA

BLOWER ASSEMBLY

BLOWER ASSEMBLY

BLOWER HOUSING ASSEMBLY

21

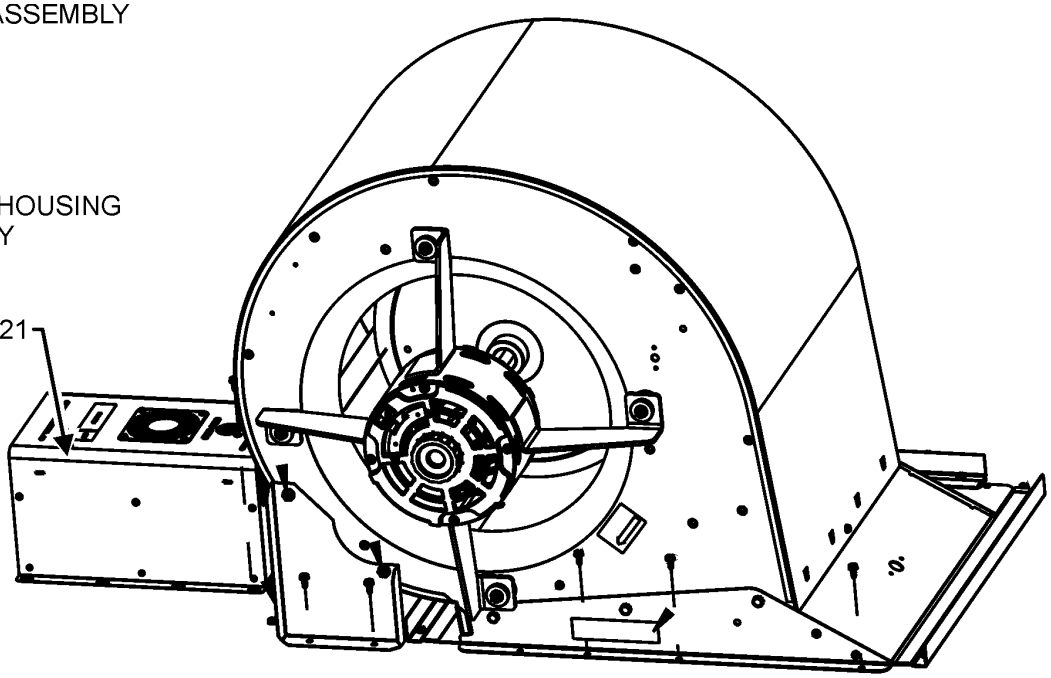

BLOWER MOTOR ASSEMBLY

251

281

271

261

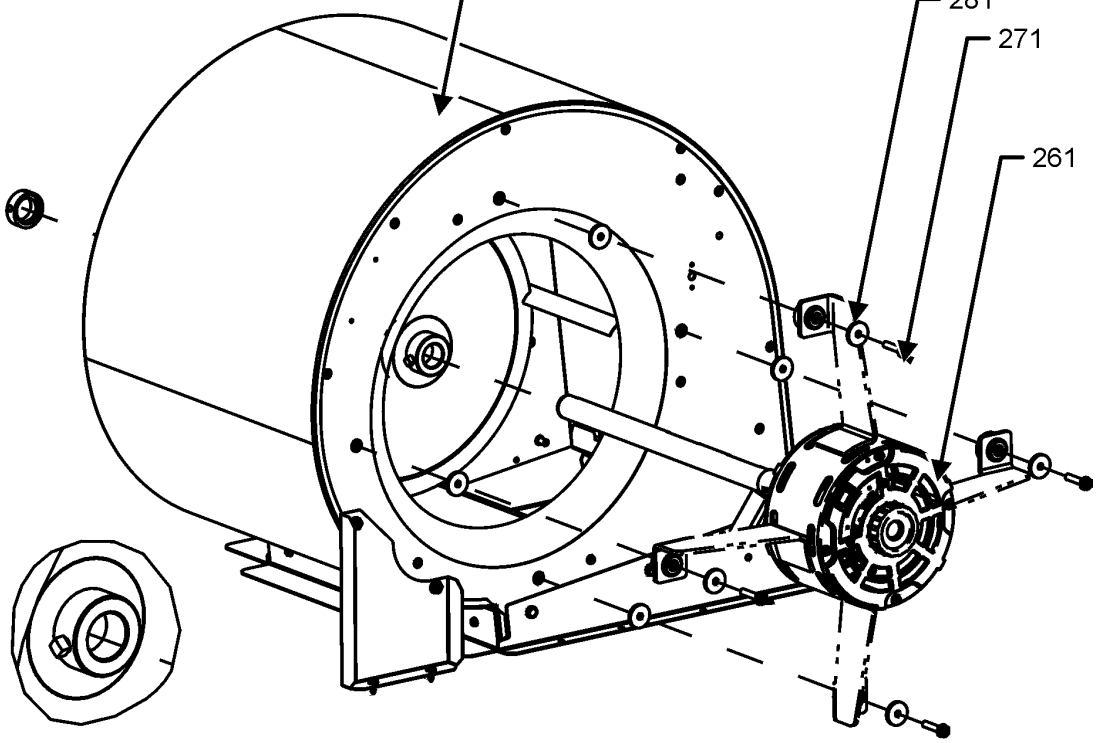

BLOWER ASSEMBLY MAY DIFFER FROM WHAT IS SHOWN

BLOWER ASSEMBLY

Ref. No:	Part No:	Description:	Ref. No:	Part No:	Description:
Image 1:					
21	0131L00156	PROGRAMMED MOTOR CONTROLLER			
251	0271L00148	ASSY, BLOWER PURCHASED 16X18			
261	0131L00122	BLOWER MOTOR (M1)			
261	0131L00124	BLOWER MOTOR (M2)			
261	0131L00125	BLOWER MOTOR (M3)			
271	M0250565	SCREW-TC 1.25" (QTY 4)			
281	B1392918	WASHER FLAT 1/4IDX1OD (QTY 8)			
NS	0121L04070	BRACKET BLOWER HOUSING			

Expanded Model Nomenclature

M1 - DHC1503D000001SAA
M2 - DHC1504D000001SAA
M3 - DHC1507D000001SAA

CONTROL BOX AND REFRIGERANT DETECTION

CONTROL BOX ASSEMBLY AND REFRIGERANT DETECTION SYSTEM

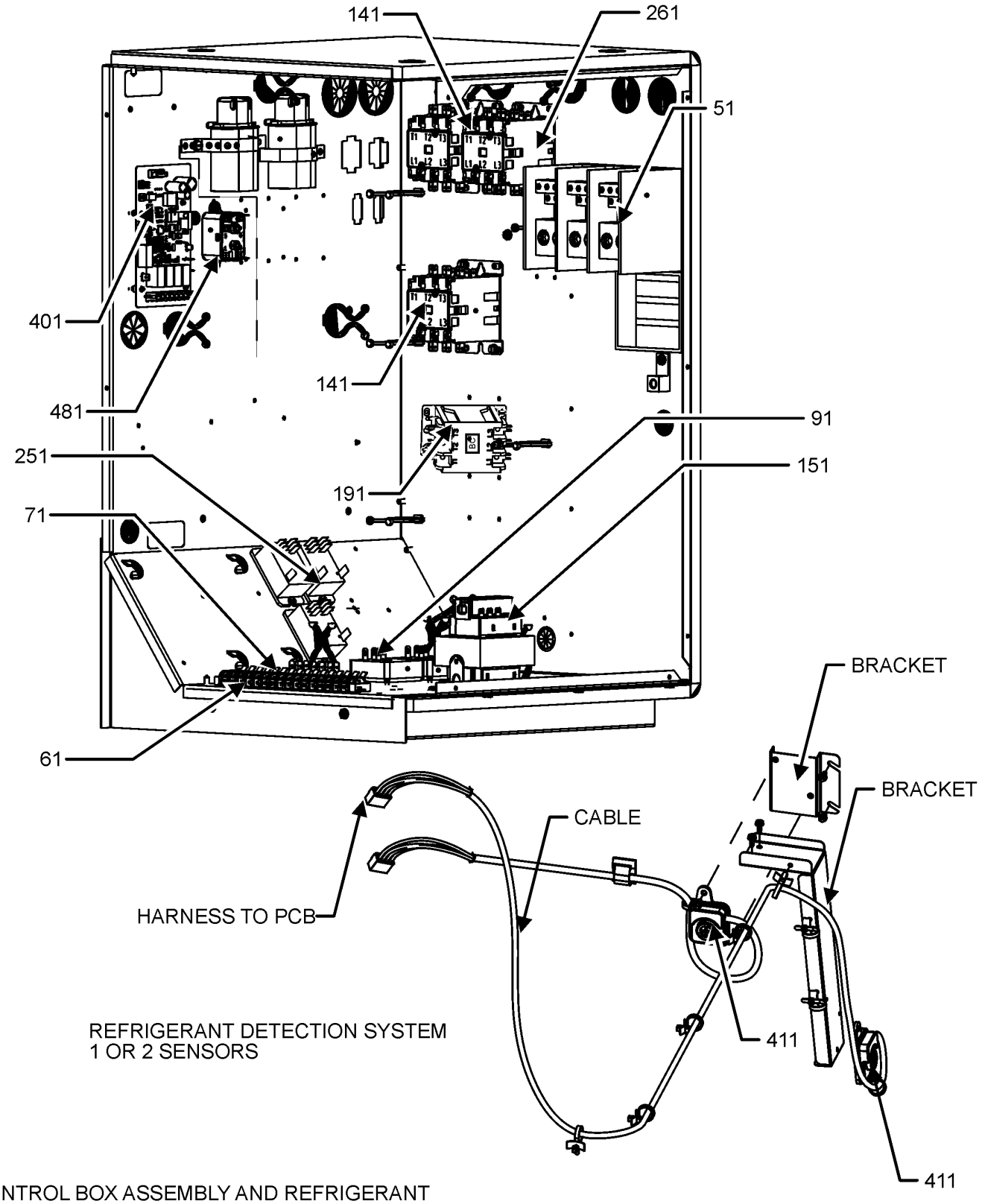

CONTROL BOX ASSEMBLY AND REFRIGERANT
DETECTION SYSTEM MAY DIFFER FROM WHAT IS SHOWN

CONTROL BOX AND REFRIGERANT DETECTION

Ref. No:	Part No:	Description:	Ref. No:	Part No:	Description:
Image 1:					
51	0130L00217	POWER,BLOCK			
61	0130M00038	TERMINAL BOARD			
71	802007090	TERM BOARD			
91	B1370772	TIME DELAY ICM 180SEC DELA (QTY 2)			
141	CONT3P030024D	CONT, 3 POLE, 30 AMP, 24VAC (QTY 3)			
151	0130M00858	TRANSFORMER (M2)			
151	0130M00859	TRANSFORMER (M1)			
151	0130M00861	TRANSFORMER (M3)			
191	CONT2P030024D	CONT, 2 POLE, 30 AMP, 24VAC			
251	0130M00178	DPDT RELAY 24VAC (QTY 3)			
261	0130M00913	AUXILLARY SWITCH (QTY 2)			
401	PCBCM301V0001	PCB CONTROL AIR HANDLER			
411	SER2A08012	SENSATA R32 SENSOR			
481	10135604	RELAY			
NS	20520901	STRAP-CAPACITOR (QTY 7)			
NS	0259L02282	WIRE HARNESS ASSY			
NS	0259L02449	WIRE HARNESS ASSY			

Expanded Model Nomenclature

M1 - DHC1503D000001SAA
M2 - DHC1504D000001SAA
M3 - DHC1507D000001SAA

ACCESSORY PARTS LIST

NOTE: NOT ALL OPTIONS AVAILABLE FOR ALL PRODUCTS

FOR ACCESSORY PARTS SEE THE FOLLOWING PART MANUAL

RP-FIOPMC

Ref. No:	Part No:	Description:	Ref. No:	Part No:	Description:
Image 1:					
NS	RP-FIOPM*	ACCESSORY RP MANUAL			
NS	RP-EHS(D/B)M*	HEATER KIT RP MANUAL			
NS	RP-EHX(D/B)M*	HEATER KIT RP MANUAL			

Expanded Model Nomenclature

M1 - DHC1503D000001SAA
M2 - DHC1504D000001SAA
M3 - DHC1507D000001SAA