REPAIR PARTS

DSC 10 Ton Package Cooling Unit

DSC1203D000001SAA
DSC1204D000001SAA
DSC1207D000001SAA

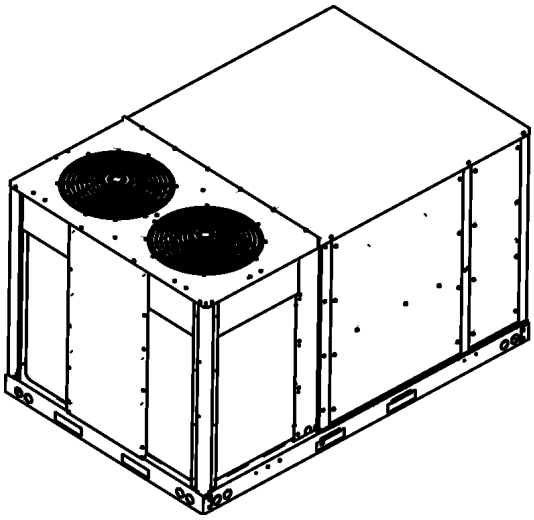

This manual is to be used by qualified technicians only.

© 2024 DAIKIN COMFORT TECHNOLOGIES MANUFACTURING, L.P. ◊ 19001 Kermier Rd. ◊ Waller, TX 77484

Important Information

Index

Functional Parts List 3

Illustration and Parts ..... 4 - 15

Views shown are for parts illustrations only, not servicing procedures.

Text Codes:

AR - As Required
NA - Not Available
NS - Not Shown
00000000 - See Note
QTY - Quantity Example (QTY 3) (If Quantity not shown, Quantity = 1)
M - Model Example (M1) (If M Code not shown, then part is used on all Models)

Expanded Model Nomenclature:

Example
M1 - Model#1
M2 - Model#2
M3 - Model#3

Daikin Comfort Technologies Manufacturing , L.P. is not responsible for personal injury or property damage resulting from improper service. Review all service information before beginning repairs.

Warranty service must be performed by an authorized technician, using authorized factory parts. If service is required after the warranty expires, Daikin Comfort Technologies Manufacturing , L.P. also recommends contacting an authorized technician and using authorized factory parts.

Daikin Comfort Technologies Manufacturing , L.P. reserves the right to discontinue, or change at any time, specifications or designs without notice or without incurring obligations.

For assistance within the U.S.A. contact:
Equipment Support
Daikin Comfort Technologies Manufacturing , L.P.
19001 Kermier Road
Waller, Texas 77484
855-770-5678-Telephone
713-863-2382-Facsimile

For assistance outside the U.S.A. contact:
International Division
Daikin Comfort Technologies Manufacturing , L.P.
19001 Kermier Road
Waller, Texas 77484
713-861-2500-Telephone
713-863-2382-Facsimile

Functional Parts

Part No:	Description:
0131L00177	BLOWER MOTOR 2.4 HP (M3)
0131L00175	BLOWER MOTOR 2.4 HP (M1)
0131L00176	BLOWER MOTOR 2.4 HP (M2)
CAP100000370LA	CAP, 10 MFD/370V/OVAL (M1, M2)
CAP050000440LA	CAPACITOR (M3)
YP54K1TTF5ASH	COMPRESSOR (M1)
YP54K1TTFDASH	COMPRESSOR (M2)
YP54K1TTFEASH	COMPRESSOR (M3)
CONT3P030024D	CONT, 3 POLE, 30 AMP, 24VAC (QTY 3)
0130M00178	DPDT RELAY 24VAC (QTY 3)
0131M00907	MOTOR, HP, 1/3, OD (M2)
0131M00908	MOTOR, HP, 1/3, OD, LAK (M3)
0131M00906	MOTOR, HP, 1/3, SP, 1, PL, 6 (M1)
PCBCM301V0001	PCB CONTROL AIR HANDLER
0131L00419	PROGRAMMED MOTOR CONTROLLER
10135604	RELAY
SER2A08012	SENSATA R32 SENSOR
0130M00730	SWITCH, HIGH PRESSURE (QTY 2)
0130M00732	SWITCH, LOW PRESSURE (QTY 2)
B1370772	TIME DELAY ICM 180SEC DELA (QTY 2)
0130M00858	TRANSFORMER (M2)
0130M00859	TRANSFORMER (M1)
0130M00861	TRANSFORMER (M3)

SPECIAL PARTS

RP-FIOPM*	ACCESSORY RP MANUAL
RP-EHX(D/B)M*	HEATER KIT RP MANUAL
RP-EHS(D/B)M*	HEATER KIT RP MANUAL

Expanded Model Nomenclature

M1 - DSC1203D000001SAA
M2 - DSC1204D000001SAA
M3 - DSC1207D000001SAA

CABINET ASSEMBLY

CABINET ASSEMBLY

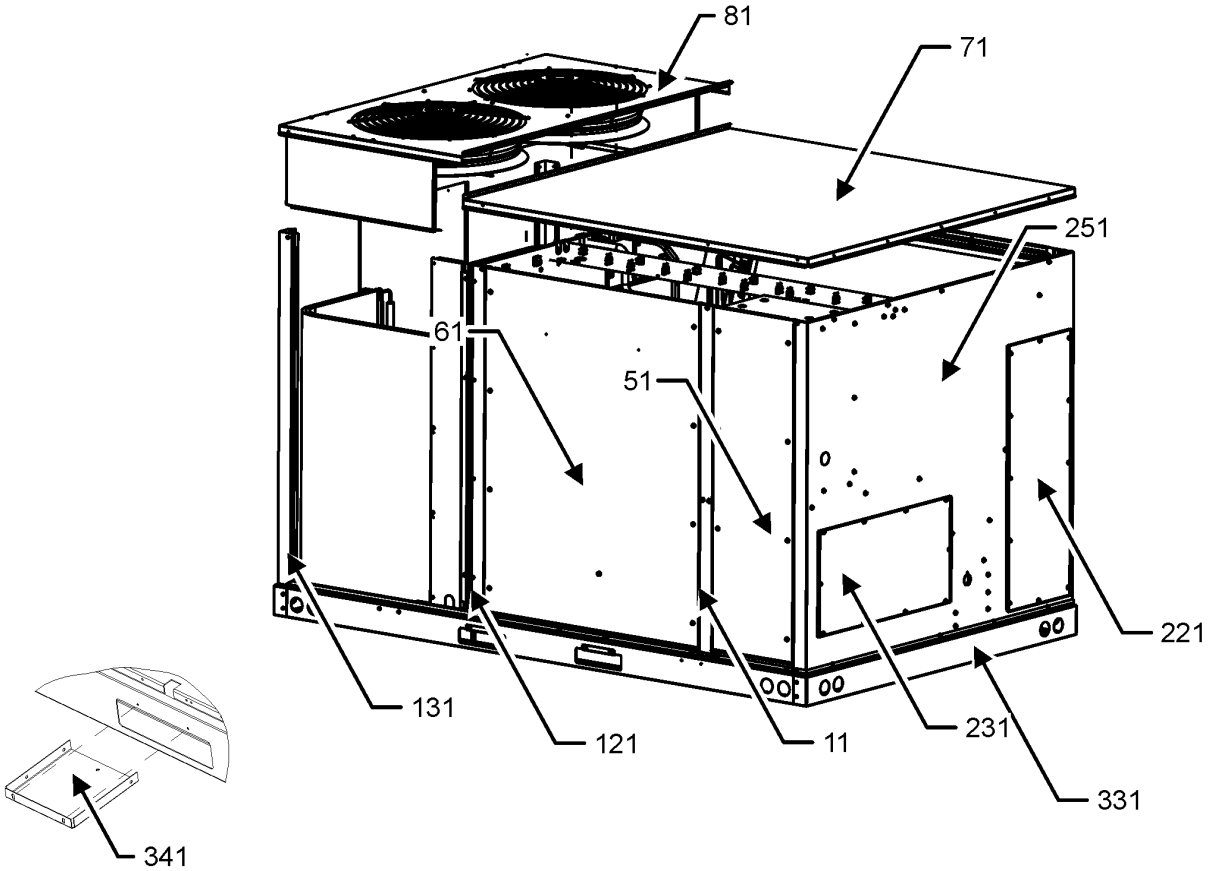

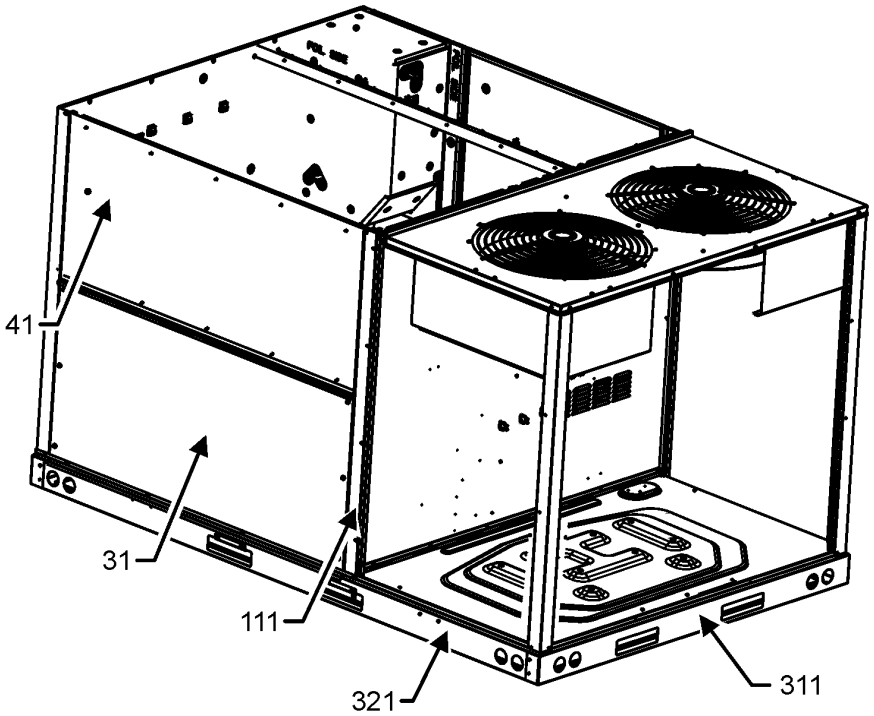

CABINET ASSEMBLY
MAY DIFFER FROM
WHAT IS SHOWN

CABINET ASSEMBLY

Ref. No:	Part No:	Description:	Ref. No:	Part No:	Description:
Image 1:					
11	0121L04041SB	PAINTED, PANEL, SIDE POST			
31	0121L04312SB	PAINTED, ECONOMIZER PANEL			
41	0121L04447SB	PAINTED, PANEL, FILTER			
51	0121L02952SB	PAINTED CONTROL PANEL			
61	0121L03821SB	PAINTED BLOWER PANEL			
71	0121L04551SB	PAINTED, PANEL, TOP INDOOR			
81	0121L05353SB	PAINTED, PANEL, TOP OUTDOOR			
111	0121L03187SB	PAINTED, SIDE POST			
121	0121L03469SB	PAINTED, SIDE POST			
131	0121L04552SB	PAINTED, PANEL, CORNER POST (QTY 2)			
221	0121L03508SB	PAINTED COVER DUCT RETURN			
231	0121L02921SB	PAINTED COVER DUCT SUPPLY			
251	0121L03508SB	PAINTED, COVER, DUCT, PANEL			
311	0121L04565	END RAIL			
321	0121L04764	SIDE RAIL (QTY 2)			
331	0121L05103	RAIL, END			
341	0121L03727	BRACKET-FORK BOARD (QTY 4)			
NS	0160L00137	AIR FILTER (QTY 2)			
NS	0160L00267	AIR FILTER (QTY 2)			
NS	0141L00084	BOARD FORK (QTY 2)			
NS	0270L02745	FILTER RACK ASSEMBLY			
NS	0121L04612SB	PAINTED COVER-DISC SWITCH			
NS	0121L03958SB	PAINTED, DRAIN PAN COVER			
NS	0121L03932SB	PNT, CONVENIENCE COVER LT COMM			

Expanded Model Nomenclature

M1 - DSC1203D000001SAA
M2 - DSC1204D000001SAA
M3 - DSC1207D000001SAA

TOP PANEL AND TUBING ASSEMBLY

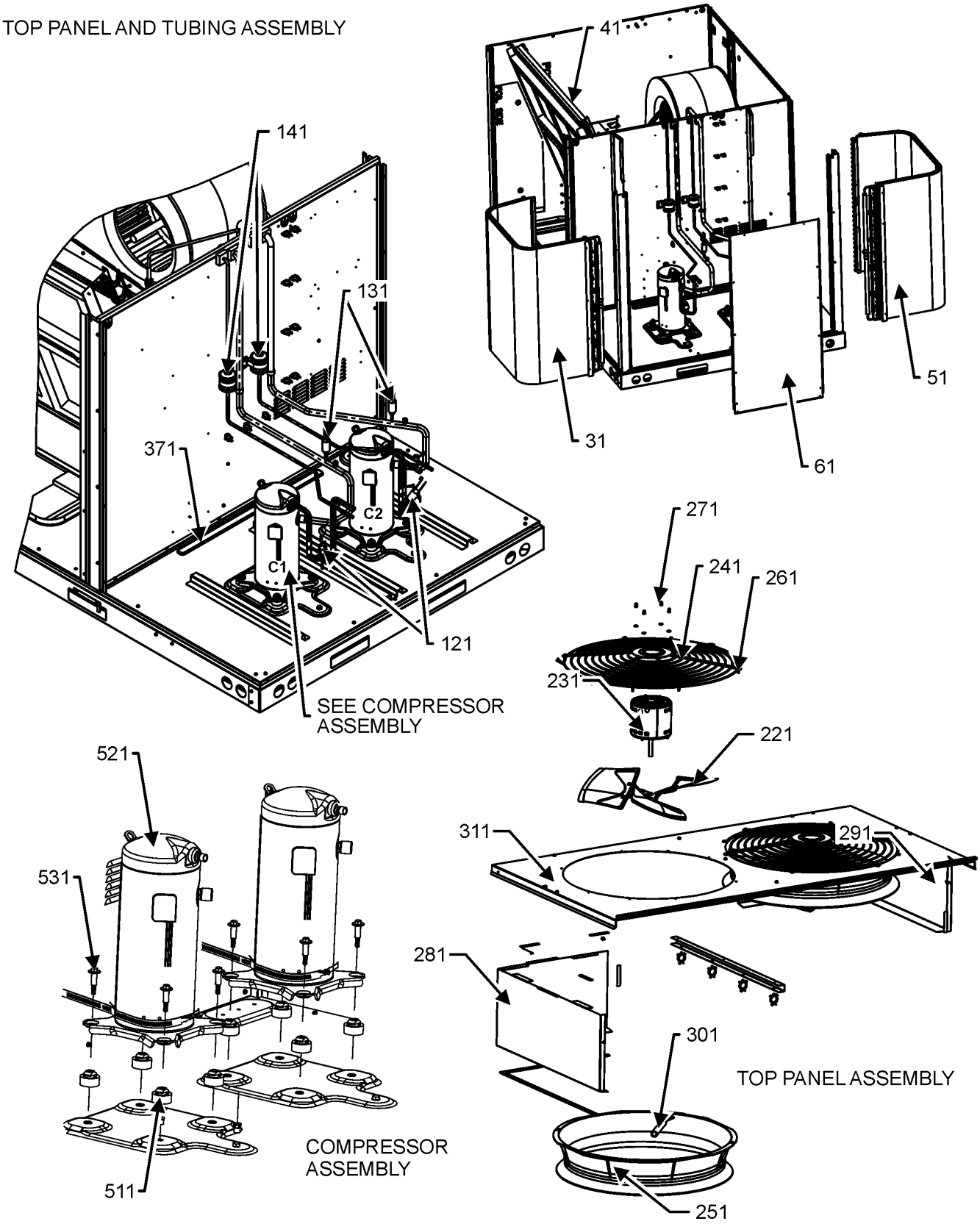

TOP PANEL AND TUBING ASSEMBLY MAY DIFFER FROM WHAT IS SHOWN

TOP PANEL AND TUBING ASSEMBLY

Ref. No:	Part No:	Description:	Ref. No:	Part No:	Description:

Image 1:

31	0201L00763	ASSY., COND COIL ,BENT
41	0202L00709	EVAP COIL CIRCUITING ASSEMBLY
51	0201L00873	ASSY., COND COIL ,BENT
61	0121L04869SB	PAINTED, COIL BLOCKOFF
121	0130M00730	SWITCH, HIGH PRESSURE (QTY 2)
131	0130M00732	SWITCH, LOW PRESSURE (QTY 2)
141	0162R00056	FILTER/DRIER-BI-FLOW
221	10625733	BLADE-FAN 22" ALUM CCW (QTY 2)
231	0131M00907	MOTOR, HP, 1/3, OD (M2)
231	0131M00908	MOTOR, HP, 1/3, OD, LAK (M3)
231	0131M00906	MOTOR, HP, 1/3, SP, 1, PL, 6 (M1)
241	0152G00000	FAN GRILLE, RAISED (QTY 2)
251	0161R00048	MOLDED RING VENTURI 22 (QTY 2)
261	0163M00004	SCREW #10X3/4 BLK (QTY 16)
271	0163M00006P	NUT, ACORN 5/16 HEX BLACK (QTY 8)
281	0121L04871	COIL BLOCKOFF
291	0121L04872	COIL BLOCKOFF
301	0161R00124	CONDUIT (QTY 2)
311	0121L05353SB	PAINTED, PANEL, TOP OUTDOOR
371	0121L04115	CHANNEL, BASEPAN
511	B1339533	GROMMET, COMPRESSOR (QTY 8)
521	YP54K1TTF5ASH	COMPRESSOR (M1)
521	YP54K1TTFDASH	COMPRESSOR (M2)
521	YP54K1TTFEASH	COMPRESSOR (M3)
531	B1393740	COMP BOLT & SLEEVE (QTY 8)
NS	20333401	GROMMET-HORSESHOE (QTY 2)
NS	0159L00066	HARNESS, COMP SCROLL (M2, M3)
NS	0159L00068	HARNESS, COMP SCROLL (M1)
NS	0159L00153	HARNESS, COMP SCROLL (M2, M3)
NS	0159L00154	HARNESS, COMP SCROLL (M1)
NS	0251L00201	TXV, & FLOWRATOR ASSEMBLY
NS	0251L00202	TXV, & FLOWRATOR ASSEMBLY
NS	M0272803	WASHER LOCK (QTY 2)
NS	0163M00005P	WASHER, BLACK .50OD.218ID (QTY 8)

Expanded Model Nomenclature

M1 - DSC1203D000001SAA
M2 - DSC1204D000001SAA
M3 - DSC1207D000001SAA

PARTITION ASSEMBLY

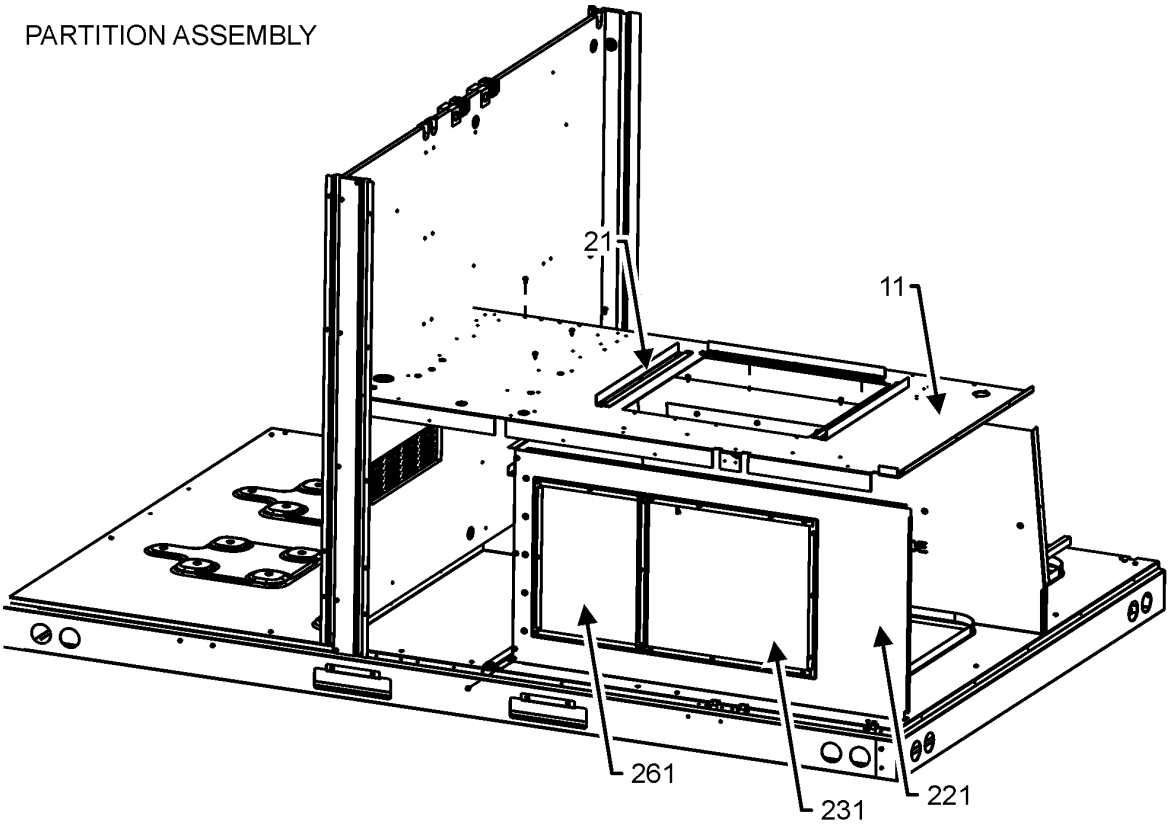

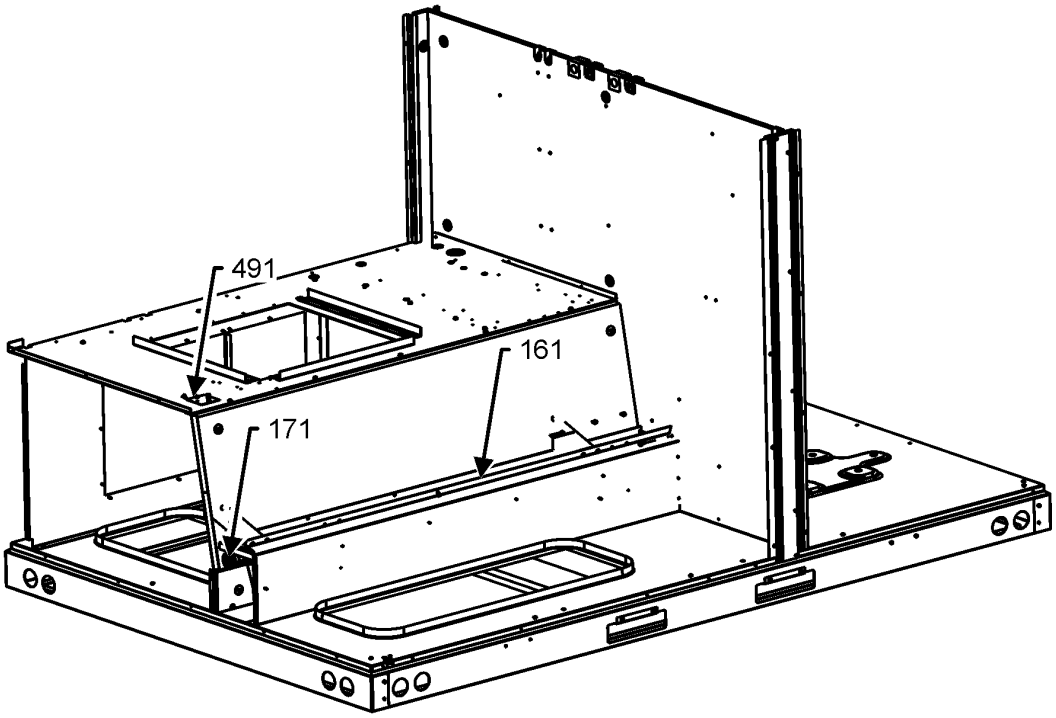

PARTITION ASSEMBLY MAY DIFFER FROM WHAT IS SHOWN

PARTITION ASSEMBLY

Ref. No:	Part No:	Description:	Ref. No:	Part No:	Description:
Image 1:					
11	0121L05380	PANEL, BLOWER DECK			
21	0121L05524	BLOWER SLIDE PLATE (QTY 3)			
161	0161L00002	DRAIN PAN EVAP 7TO12			
171	0154L00180	GASKET, DRAIN PAN			
221	0121L04010	PANEL FRONT, EHK			
231	0121L03965	PNL, COVER EHK			
261	0121L03458	PANEL EHK BLOCK OFF			
491	0121L00321	COVER SMOKE DETECTOR			
NS	0163L00071	PLUG, DRAIN			

Expanded Model Nomenclature

M1 - DSC1203D000001SAA
M2 - DSC1204D000001SAA
M3 - DSC1207D000001SAA

BLOWER ASSEMBLY

BLOWER ASSEMBLY

BLOWER HOUSING
ASSEMBLY

21

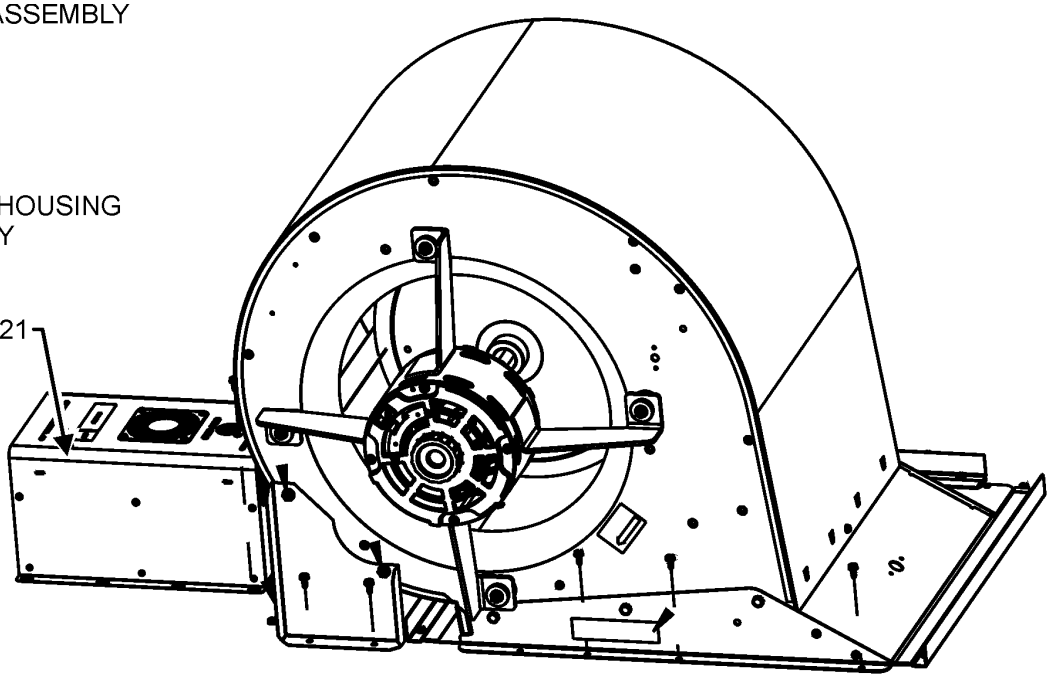

251

BLOWER MOTOR ASSEMBLY

281

271

261

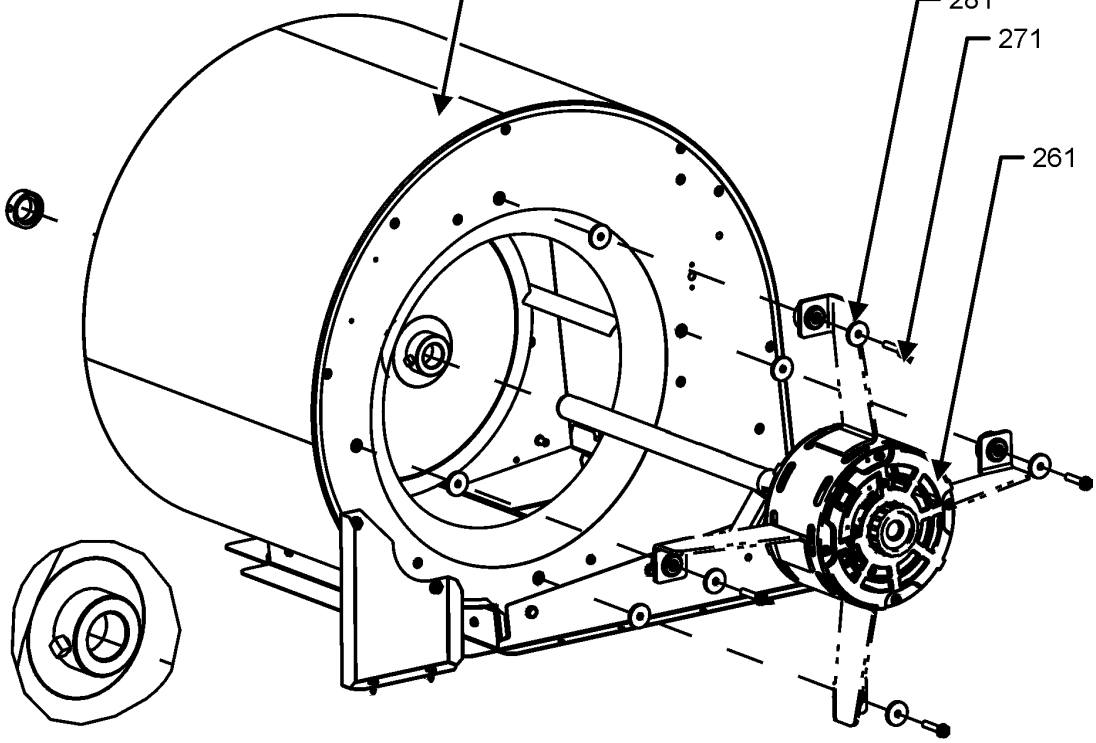

BLOWER ASSEMBLY MAY DIFFER FROM WHAT IS SHOWN

BLOWER ASSEMBLY

Ref. No:	Part No:	Description:	Ref. No:	Part No:	Description:
Image 1:					
21	0131L00419	PROGRAMMED MOTOR CONTROLLER			
251	0271L00148	ASSY, BLOWER PURCHASED 16X18			
261	0131L00175	BLOWER MOTOR 2.4 HP (M1)			
261	0131L00176	BLOWER MOTOR 2.4 HP (M2)			
261	0131L00177	BLOWER MOTOR 2.4 HP (M3)			
271	M0250565	SCREW-TC 1.25" (QTY 4)			
281	B1392918	WASHER FLAT 1/4IDX1OD (QTY 8)			
NS	0121L04070	BRACKET BLOWER HOUSING			

Expanded Model Nomenclature

M1 - DSC1203D000001SAA
M2 - DSC1204D000001SAA
M3 - DSC1207D000001SAA

CONTROL BOX AND REFRIGERANT DETECTION

CONTROL BOX ASSEMBLY AND REFRIGERANT DETECTION SYSTEM

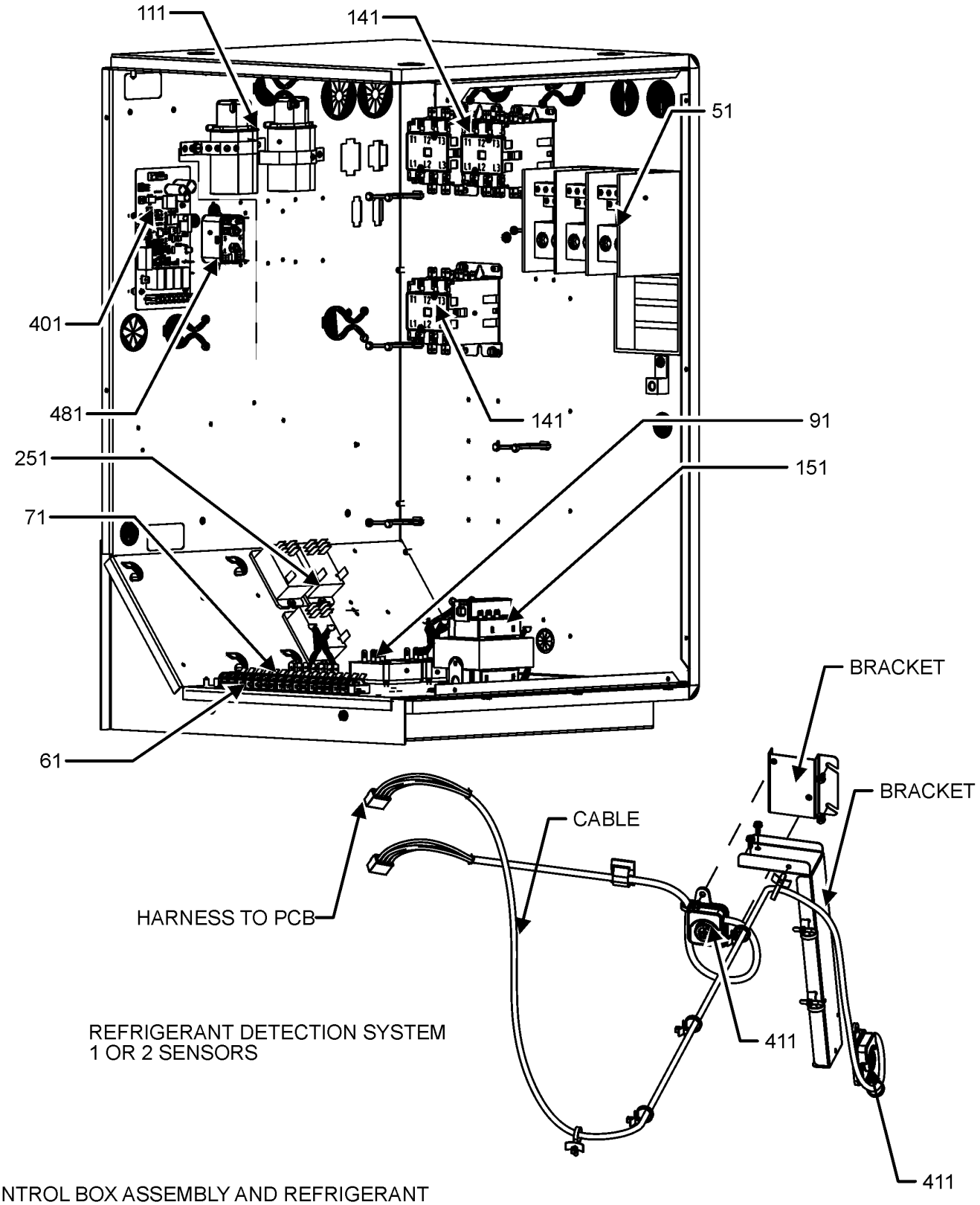

CONTROL BOX ASSEMBLY AND REFRIGERANT
DETECTION SYSTEM MAY DIFFER FROM WHAT IS SHOWN

CONTROL BOX AND REFRIGERANT DETECTION

Ref. No:	Part No:	Description:	Ref. No:	Part No:	Description:
Image 1:					
51	0130L00217	POWER,BLOCK			
61	0130M00038	TERMINAL BOARD			
71	802007090	TERM BOARD			
91	B1370772	TIME DELAY ICM 180SEC DELA (QTY 2)			
111	CAP100000370LA	CAP, 10 MFD/370V/OVAL (M1, M2)			
111	CAP050000440LA	CAPACITOR (M3)			
131	0164M00127	BOOT, CAPACITOR (QTY 2)			
141	CONT3P030024D	CONT, 3 POLE, 30 AMP, 24VAC (QTY 3)			
151	0130M00858	TRANSFORMER (M2)			
151	0130M00859	TRANSFORMER (M1)			
151	0130M00861	TRANSFORMER (M3)			
251	0130M00178	DPDT RELAY 24VAC (QTY 3)			
401	PCBCM301V0001	PCB CONTROL AIR HANDLER			
411	SER2A08012	SENSATA R32 SENSOR			
481	10135604	RELAY			
NS	20520901	STRAP-CAPACITOR (QTY 7)			
NS	0259L02282	WIRE HARNESS ASSY			
NS	0259L02449	WIRE HARNESS ASSY			

Expanded Model Nomenclature

M1 - DSC1203D000001SAA
M2 - DSC1204D000001SAA
M3 - DSC1207D000001SAA

ACCESSORY PARTS LIST

NOTE: NOT ALL OPTIONS AVAILABLE FOR ALL PRODUCTS

FOR ACCESSORY PARTS SEE THE FOLLOWING PART MANUAL

RP-FIOPMC

Ref. No:	Part No:	Description:	Ref. No:	Part No:	Description:
Image 1:					
NS	RP-FIOPM*	ACCESSORY RP MANUAL			
NS	RP-EHS(D/B)M*	HEATER KIT RP MANUAL			
NS	RP-EHX(D/B)M*	HEATER KIT RP MANUAL			

Expanded Model Nomenclature

M1 - DSC1203D000001SAA
M2 - DSC1204D000001SAA
M3 - DSC1207D000001SAA