REPAIR PARTS

DSG240 Direct Drive 20 Ton Gas Unit

DSG2403DH00001SAA
DSG2403DL00001SAA
DSG2403DM00001SAA
DSG2404DH00001SAA
DSG2404DL00001SAA
DSG2404DM00001SAA
DSG2407DH00001SAA
DSG2407DL00001SAA
DSG2407DM00001SAA

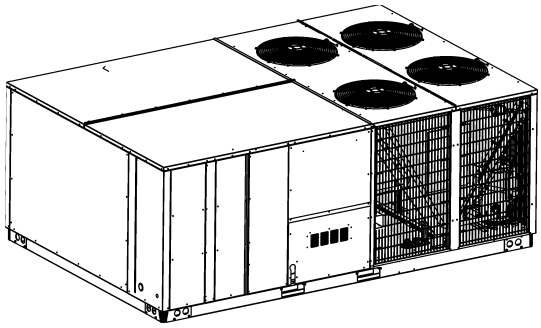

This manual is to be used by qualified technicians only.

© 2024 DAIKIN COMFORT TECHNOLOGIES MANUFACTURING, L.P. ◊ 19001 Kermier Rd. ◊ Waller, TX 77484

RP-D1396 www.daikinac.com November 2024

Index

Functional Parts List 3

Illustration and Parts ..... 4 - 19

Views shown are for parts illustrations only, not servicing procedures.

Text Codes:

AR - As Required
NA - Not Available
NS - Not Shown
00000000 - See Note
QTY - Quantity Example (QTY 3) (If Quantity not shown, Quantity = 1)
M - Model Example (M1) (If M Code not shown, then part is used on all Models)

Expanded Model Nomenclature:

Example
M1 - Model#1
M2 - Model#2
M3 - Model#3

Daikin Comfort Technologies Manufacturing , L.P. is not responsible for personal injury or property damage resulting from improper service. Review all service information before beginning repairs.

Warranty service must be performed by an authorized technician, using authorized factory parts. If service is required after the warranty expires, Daikin Comfort Technologies Manufacturing , L.P. also recommends contacting an authorized technician and using authorized factory parts.

Daikin Comfort Technologies Manufacturing , L.P. reserves the right to discontinue, or change at any time, specifications or designs without notice or without incurring obligations.

For assistance within the U.S.A. contact:
Equipment Support
Daikin Comfort Technologies Manufacturing , L.P.
19001 Kermier Road
Waller, Texas 77484
855-770-5678-Telephone
713-863-2382-Facsimile

For assistance outside the U.S.A. contact:
International Division
Daikin Comfort Technologies Manufacturing , L.P.
19001 Kermier Road
Waller, Texas 77484
713-861-2500-Telephone
713-863-2382-Facsimile

Functional Parts

Part No:	Description:
0130M00913	AUXILLARY SWITCH (QTY 2)
0163L00000	BECKETT BURNER (QTY 8)
CAP100000370LA	CAP, 10 MFD/370V/OVAL (QTY 4)
YP105K1TTFDCRT	COMPRESSOR (M4, M5, M6)
YP105K1TTF5ERZ	COMPRESSOR (M1, M2, M3)
YP105K1TTFECRT	COMPRESSOR (M7, M8, M9)
0201L00844	COND COIL, MICROCHNL 20MM (QTY 2)
CONT2P030024D	CONT, 2 POLE, 30 AMP, 24VAC
CONT3P030024D	CONT, 3 POLE, 30 AMP, 24VAC (QTY 2)
CONT3P030024D	CONT, 3 POLE, 30 AMP, 24VAC (M4, M5, M6, M7, M8, M9)
CONT3P050024D	CONT, 3 POLE, 50 AMP 24VAC (M1, M2, M3)
0130L00275	CRANK CASE HEATER, 70W, 575V (M7, M8, M9)
0130L00273	CRANK CASE HEATER-70W 240V (M1, M2, M3)
0130L00274	CRANK CASE HEATER-70W, 480V (M4, M5, M6)
0130M00178	DPDT RELAY 24VAC (QTY 3)
0202L00726	EVAPORATOR COIL ASSEMBLY
0251L00193	EXPANSION VALVE ASSEMBLY C1
0251L00194	EXPANSION VALVE ASSEMBLY C2
0130F00010	FLAME SENSOR
0130L00251	IGNITOR
20162904	LIMIT, PRIMARY (QTY 2)
0130M00063	LIMIT, PRIMARY, 140, GOLD
10123532	LIMIT-RESET MAN-GRAY (M2, M5, M8)
10123529	LIMIT-RESET MAN-GREEN (M1, M3, M4, M6, M7, M9)
0131L00122	MOTOR, BLOWER (M1, M2, M3)
0131L00124	MOTOR, BLOWER (M4, M5, M6)
0131L00125	MOTOR, BLOWER (M7, M8, M9)
0131M00925	Nidec Motor, 1/2 HP (M1, M2, M3)
0131M00930	Nidec Motor, 1/2 HP (M7, M8, M9)
0131M00926	Nidec Motor, 1/2 HP (M4, M5, M6)
PCBCM301V0001	PCB, CONTROL, AIR HANDLER
PCBAG123	PCB, IGNITION, DSI, INTEG
11112501	PRESSURE SWITCH
0131L00720	PROGRAM MOTOR CONTROLLER (M3, M6, M9)
0131L00721	PROGRAM MOTOR CONTROLLER (M1, M4, M7)
0131L00719	PROGRAM MOTOR CONTROLLER (M2, M5, M8)
10135604	RELAY (QTY 3)
SER2A08012	SENSATA, R32 SENSOR
0130M00732	SWITCH LOW PRESSURE (QTY 2)
0130M00730	SWITCH, HIGH PRESSURE (QTY 2)
0130L00319	TRANSFORMER (M1, M2, M3)
0130L00320	TRANSFORMER (M7, M8, M9)
0130M00860	TRANSFORMER (M7, M8, M9)
0130M00862	TRANSFORMER (M4, M5, M6)
0130L00318	TRANSFORMER (M4, M5, M6)
0151M00015	VALVE, GAS (HW) VR83

SPECIAL PARTS

RP-EH[S,X]*L*	ACCESSORY RP MANUAL
RP-FIOPL*	ACCESSORY RP MANUAL

Expanded Model Nomenclature

M1 - DSG2403DH00001SAA
M2 - DSG2403DL00001SAA
M3 - DSG2403DM00001SAA
M4 - DSG2404DH00001SAA
M5 - DSG2404DL00001SAA
M6 - DSG2404DM00001SAA
M7 - DSG2407DH00001SAA
M8 - DSG2407DL00001SAA
M9 - DSG2407DM00001SAA

Cabinet Assembly

CABINET ASSEMBLY

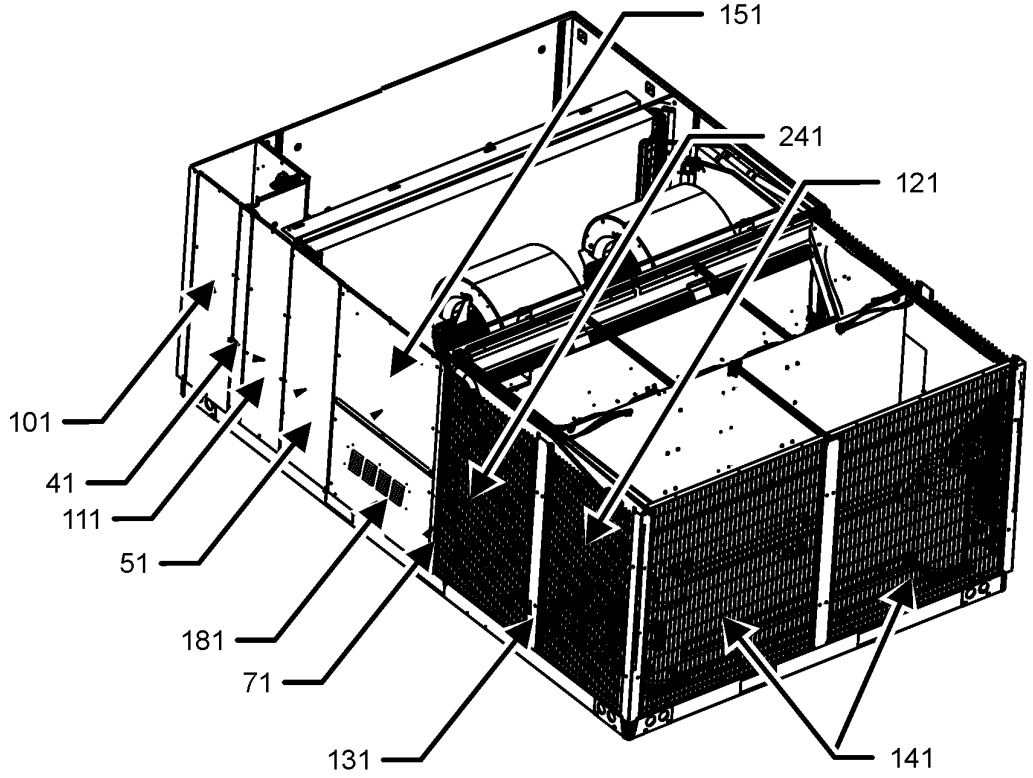

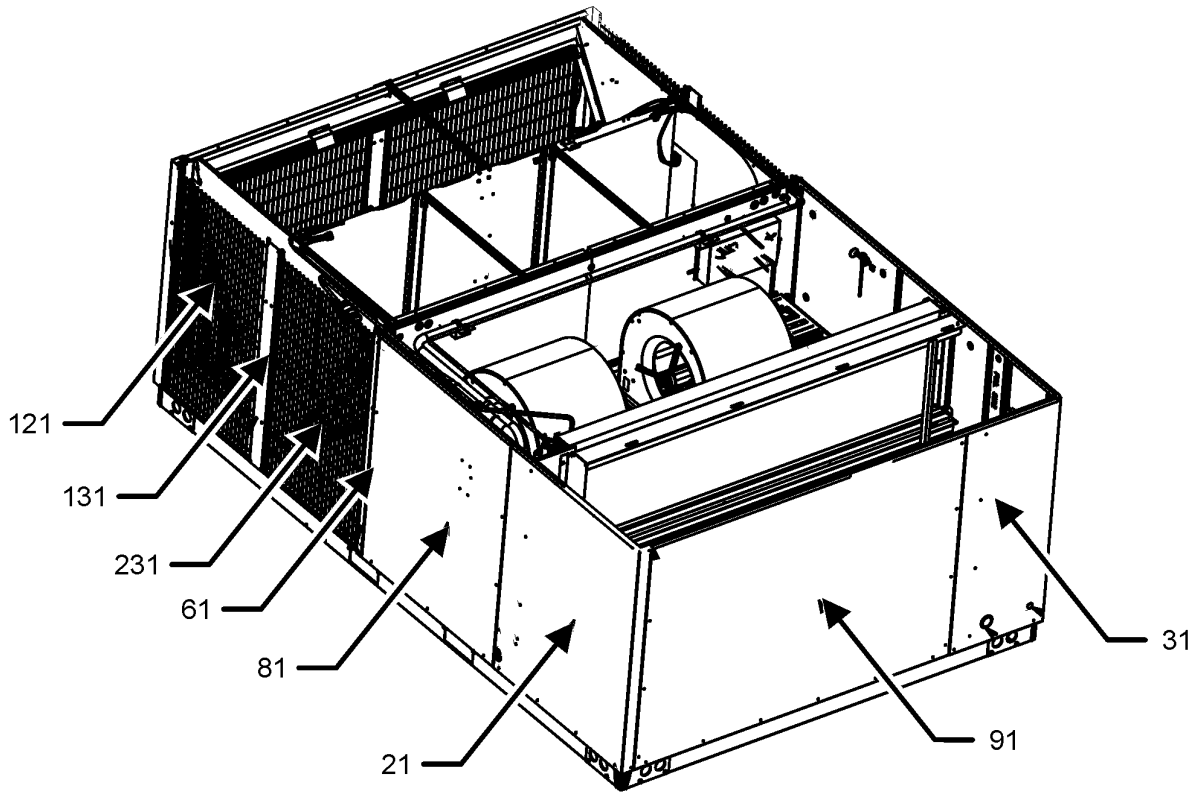

CABINET ASSEMBLY MAY DIFFER FROM WHAT IS SHOWN

Cabinet Assembly

Ref. No:	Part No:	Description:	Ref. No:	Part No:	Description:
Image 1:					
21	0121L00681SB	PAINTED EVAP PANEL			
31	0121L05536SB	PAINTED, PANEL CONTROL CORNER			
41	0121L05535SB	PAINTED, POST CONTRO/FILTER			
51	0121L05534SB	PAINTED, DOOR POST EVAP BLOWER			
61	0121L04679SB	PAINTED POST PARTITION EVAP			
71	0121L04681SB	PAINTED POST PARTITION GAS			
81	0121L00685SB	PNT DOOR BLWR EVAP SIDE			
91	0121L00688SB	PNT ACCESSORY PANEL			
101	0121L05533SB	PAINTED, DOOR, CONTROL			
111	0121L05532SB	PAINTED, DOOR, FILTER			
121	0152L00022	GRILL CONDENSER (QTY 2)			
131	0121L01144SB	POST COND PANEL PNT (QTY 2)			
141	0152L00019	GRILL CONDENSER (QTY 2)			
151	0121L05352SB	PAINTED, DOOR-BLOWER, GAS SIDE			
181	0121L00562SB	PNT, HOOD-COMBUSTION AIR			
231	0152L00023	GRILL CONDENSER			
241	0152L00024	GRILLE-CONDENSOR, GAS FLUE			
NS	0160L00136	AIR FILTER (QTY 8)			
NS	0270L02482	ASSY., FILTER RACK			
NS	B1392156	PLASTIC CAP 2 1/8			
NS	0163M00097	SCREW WASHED (QTY 104)			

Expanded Model Nomenclature

M1 - DSG2403DH00001SAA
M2 - DSG2403DL00001SAA
M3 - DSG2403DM00001SAA
M4 - DSG2404DH00001SAA
M5 - DSG2404DL00001SAA
M6 - DSG2404DM00001SAA
M7 - DSG2407DH00001SAA
M8 - DSG2407DL00001SAA
M9 - DSG2407DM00001SAA

Top Panel Assembly

TOP PANEL ASSEMBLY

TOP PANEL
OUTDOOR ASSEMBLY

241
(X4)

281
291
321

211

221

261
(X4)

251
(X4)

331
(X4)

271
(X4)

TOP PANEL INDOOR ASSEMBLY

21

11

TOP PANEL ASSEMBLIES MAY DIFFER FROM WHAT IS SHOWN

Top Panel Assembly

Ref. No:	Part No:	Description:	Ref. No:	Part No:	Description:

Image 1:

11	0121L00693SB	TOP CONTROL SIDE PNT
21	0121L00694SB	TOP PANEL ASSY PNT
211	0121L04969SB	PAINTED TOP FAN FAN MOUNT
221	0121L04971SB	PAINTED, TOP PANEL, FAN MOUNT
241	0152G00000	FAN GRILLE, RAISED (QTY 4)
251	0161R00124	CONDUIT (QTY 4)
261	0161R00048	MOLDED RING VENTURI 22 (QTY 4)
271	0150M00065	FAN BLADE, 22' (QTY 4)
281	0163M00006P	NUT ACORN 5/16 HEX BLACK (QTY 16)
291	0163M00005P	WASHER BLACK .50 OD .218ID (QTY 16)
321	M0272803	WASHER LOCK (QTY 8)
331	0131M00925	Nidec Motor, 1/2 HP (M1, M2, M3)
331	0131M00926	Nidec Motor, 1/2 HP (M4, M5, M6)
331	0131M00930	Nidec Motor, 1/2 HP (M7, M8, M9)

Expanded Model Nomenclature

M1 - DSG2403DH00001SAA
M2 - DSG2403DL00001SAA
M3 - DSG2403DM00001SAA
M4 - DSG2404DH00001SAA
M5 - DSG2404DL00001SAA
M6 - DSG2404DM00001SAA
M7 - DSG2407DH00001SAA
M8 - DSG2407DL00001SAA
M9 - DSG2407DM00001SAA

Tubing and Compressor Assembly

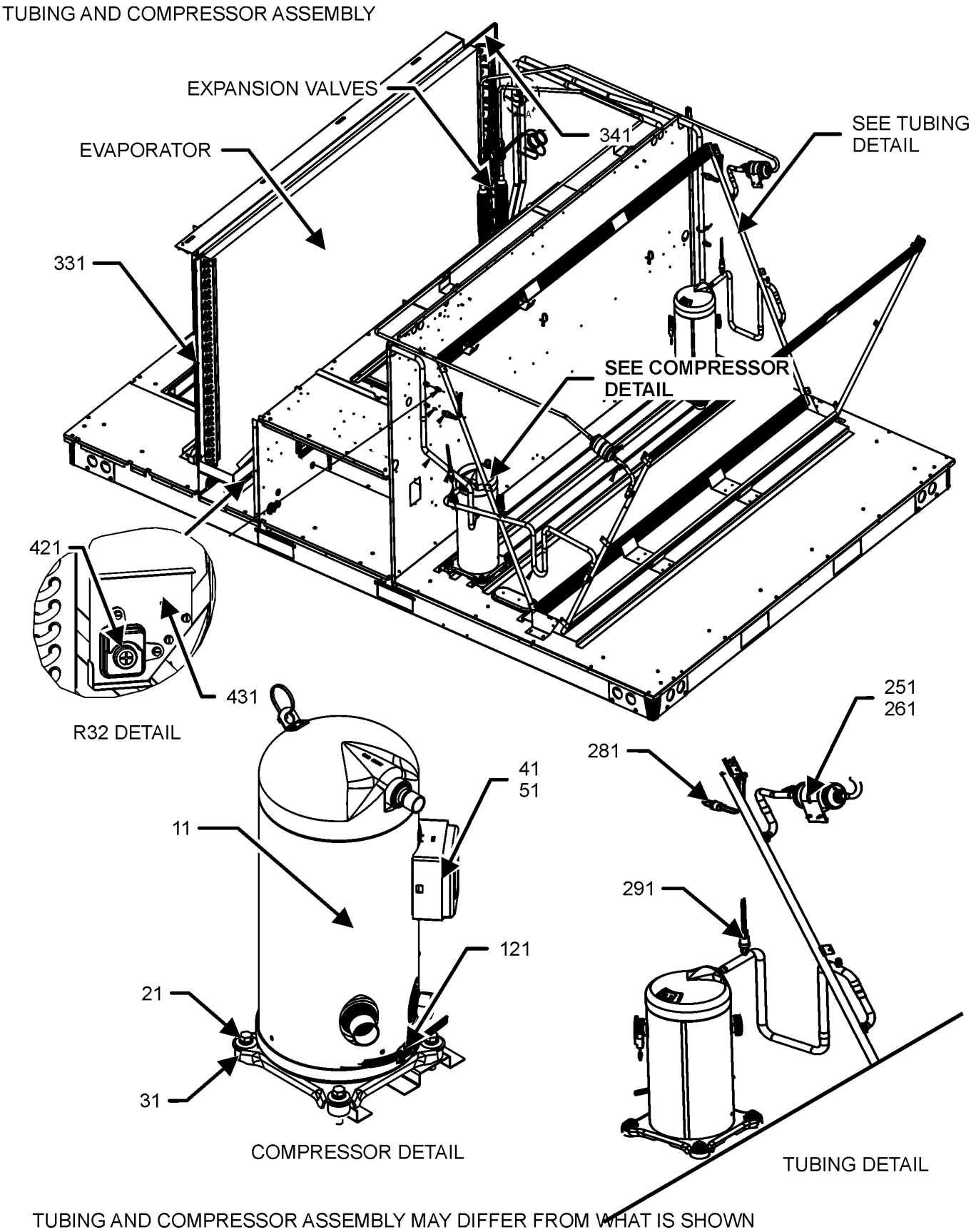

TUBING AND COMPRESSOR ASSEMBLY MAY DIFFER FROM WHAT IS SHOWN

Tubing and Compressor Assembly

Ref. No:	Part No:	Description:	Ref. No:	Part No:	Description:
Image 1:					
11	YP105K1TTF5ERZ	COMPRESSOR (M1, M2, M3)			
11	YP105K1TTFDCRT	COMPRESSOR (M4, M5, M6)			
11	YP105K1TTFECRT	COMPRESSOR (M7, M8, M9)			
21	0164M00018	GROMMET COMPRESSOR (QTY 8)			
31	B1393740	COMP BOLT SLEEVE (QTY 8)			
41	0159L00166	HARNESS, COMPRESSOR SCROLL (M1, M2, M3)			
41	0159L00147	HARNESS, SCROLL COMPRESSOR (M4, M5, M6, M7, M8, M9)			
51	0159L00167	HARNESS, COMPRESSOR SCROLL (M1, M2, M3)			
51	0159L00148	HARNESS, SCROLL COMPRESSOR (M4, M5, M6, M7, M8, M9)			
121	0130L00275	CRANK CASE HEATER, 70W, 575V (M7, M8, M9)			
121	0130L00273	CRANK CASE HEATER-70W 240V (M1, M2, M3)			
121	0130L00274	CRANK CASE HEATER-70W, 480V (M4, M5, M6)			
251	0162M00469	FILTER DRIER			
261	0162M00469	FILTER DRIER			
281	0130M00732	SWITCH LOW PRESSURE (QTY 2)			
291	0130M00730	SWITCH, HIGH PRESSURE (QTY 2)			
331	0121L04512	BLOCK OFF EVAPORATOR			
341	0121L05428	BLOCK OFF - EVAPORATOR			
421	SER2A08012	SENSATA, R32 SENSOR			
431	0121L05665	BRKT, SENSOR MOUNT			
NS	B1373315	ACCESS FITTING (QTY 4)			
NS	0141L00029	BOARD FORK (QTY 2)			
NS	0121L00724	BRACKET FORK BOARD (QTY 4)			
NS	0151M00104	VALVE CORE (QTY 8)			

Expanded Model Nomenclature

M1 - DSG2403DH00001SAA
M2 - DSG2403DL00001SAA
M3 - DSG2403DM00001SAA
M4 - DSG2404DH00001SAA
M5 - DSG2404DL00001SAA
M6 - DSG2404DM00001SAA
M7 - DSG2407DH00001SAA
M8 - DSG2407DL00001SAA
M9 - DSG2407DM00001SAA

Partition,Evaporator,Condenser Assembly

PARTITION, EVAPORATOR, CONDENSER ASSEMBLY

EVAPORATOR ASSEMBLY

CONDENSER ASSEMBLY

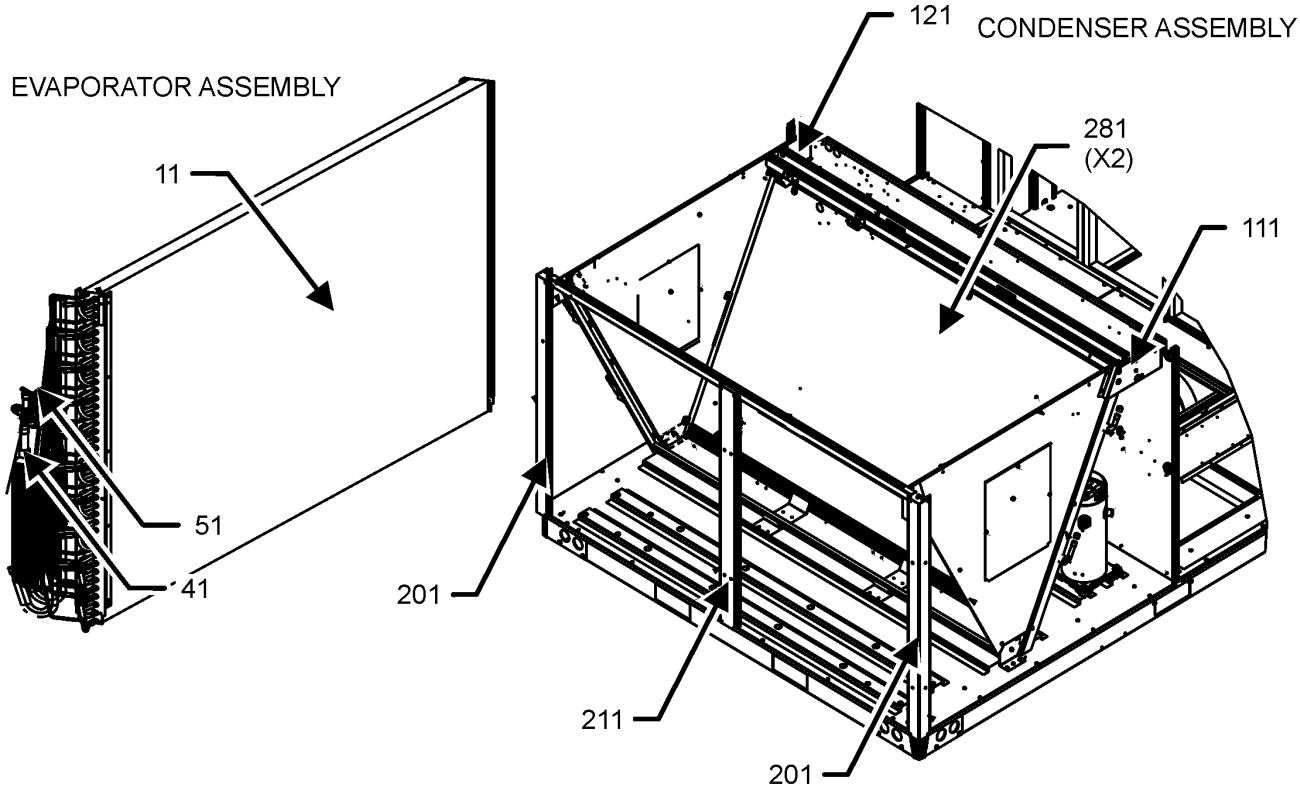

PARTITION ASSEMBLY

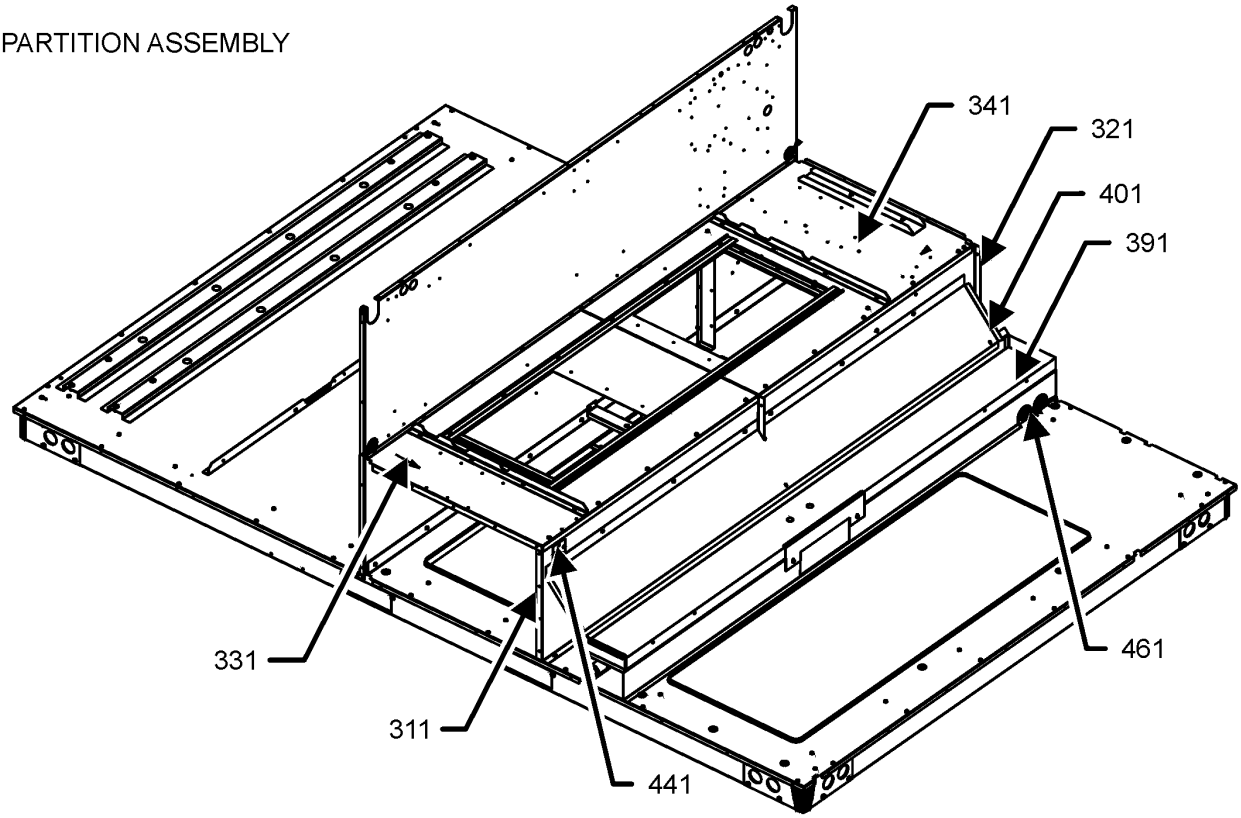

PARTITION, EVAPORATOR, CONDENSER ASSEMBLY MAY DIFFER FROM WHAT IS SHOWN

Partition,Evaporator,Condenser Assembly

Ref. No:	Part No:	Description:	Ref. No:	Part No:	Description:

Image 1:

11	0202L00726	EVAPORATOR COIL ASSEMBLY
41	0251L00193	EXPANSION VALVE ASSEMBLY C1
51	0251L00194	EXPANSION VALVE ASSEMBLY C2
111	0121L04529	BRACKET - CONDENSOR END
121	0121L04635	BRACKET - CONDENSOR END
201	0121L04608SB	PAINTED CORNER POST (QTY 2)
211	0121L01144SB	POST COND PANEL PNT (QTY 2)
281	0201L00844	COND COIL, MICROCHNL 20MM (QTY 2)
311	0121L05236	DECK, SIDE DUCT END
321	0121L05351	DECK-SIDE, HEAT END
331	0121L05346	DECK, BLOWER EVAP SIDE
341	0121L05345	DECK, CONTROL BOX END
391	0270L02431DG	PAINTED DRAIN PAN WELDMENT
401	0121L05431	SHIELD, BLOWOFF
441	0121L00321	COVER SMOKE DETECTOR
461	0164G00004	GROMMET HORSESHOE 1.75 (QTY 3)
NS	0121L00552	ANGLE-HEAT EXCHANGER, LH SIDE
NS	0121L00553	ANGLE-HEAT EXCHANGER, LOWER (QTY 2)
NS	0121L00551	ANGLE-HEAT EXCHANGER, RH SIDE
NS	0163L00045	FITTING DRAIN EXIT

Expanded Model Nomenclature

M1 - DSG2403DH00001SAA
M2 - DSG2403DL00001SAA
M3 - DSG2403DM00001SAA
M4 - DSG2404DH00001SAA
M5 - DSG2404DL00001SAA
M6 - DSG2404DM00001SAA
M7 - DSG2407DH00001SAA
M8 - DSG2407DL00001SAA
M9 - DSG2407DM00001SAA

Blower Assembly

BLOWER ASSEMBLY

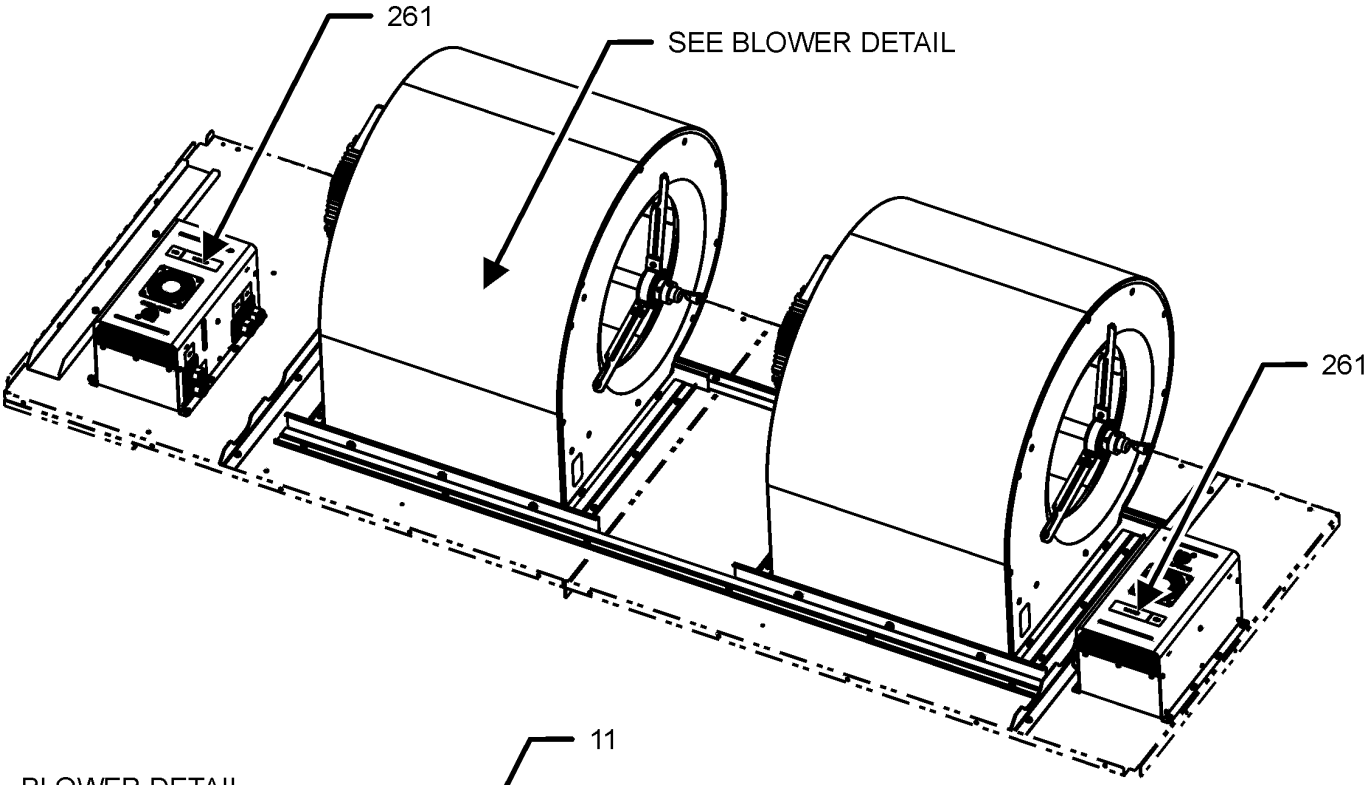

BLOWER DETAIL

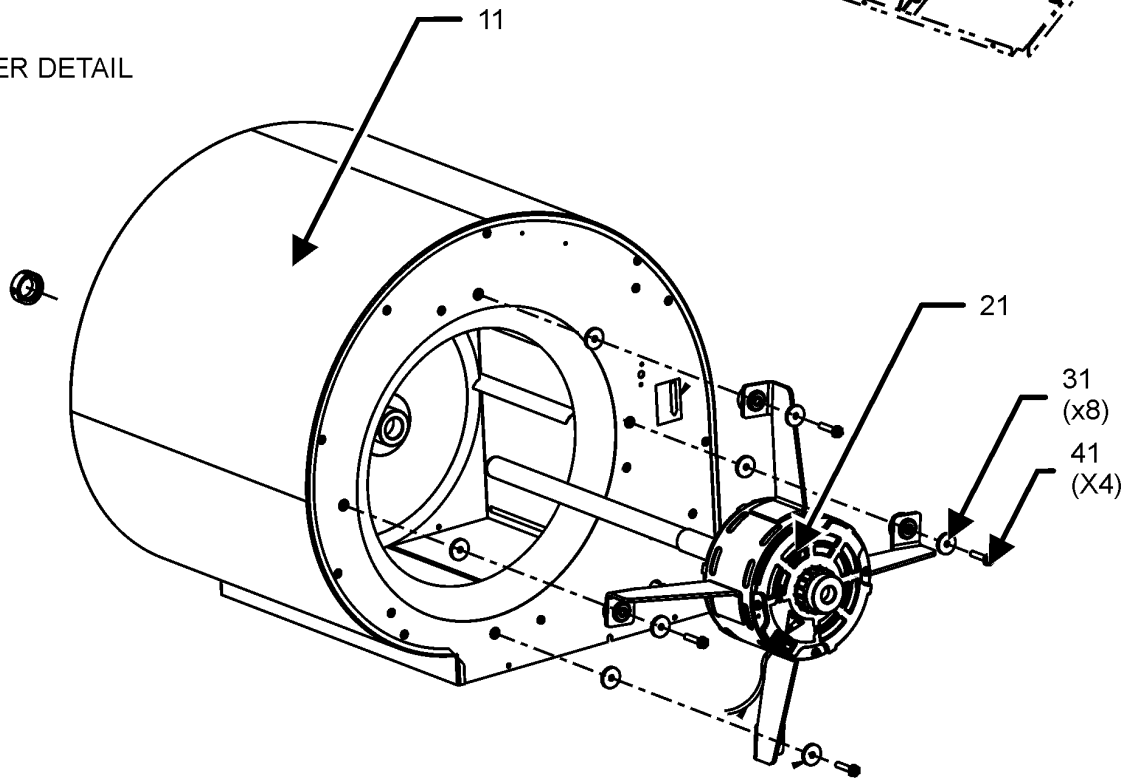

BLOWER ASSEMBLY MAY DIFFER FROM WHAT IS SHOWN

Blower Assembly

Ref. No:	Part No:	Description:	Ref. No:	Part No:	Description:
Image 1:					
11	0271L00385	BLOWER ASSEMBLY (QTY 2)			
21	0131L00122	MOTOR, BLOWER (M1, M2, M3)			
21	0131L00124	MOTOR, BLOWER (M4, M5, M6)			
21	0131L00125	MOTOR, BLOWER (M7, M8, M9)			
31	B1392918	WASHER FLAT 1/4 IDX1OD (QTY 16)			
41	M0250565	SCREW TC 1.25 (QTY 8)			
261	0131L00719	PROGRAM MOTOR CONTROLLER (M2, M5, M8)			
261	0131L00720	PROGRAM MOTOR CONTROLLER (M3, M6, M9)			
261	0131L00721	PROGRAM MOTOR CONTROLLER (M1, M4, M7)			
NS	20162904	LIMIT, PRIMARY (QTY 2)			

Expanded Model Nomenclature

M1 - DSG2403DH00001SAA
M2 - DSG2403DL00001SAA
M3 - DSG2403DM00001SAA
M4 - DSG2404DH00001SAA
M5 - DSG2404DL00001SAA
M6 - DSG2404DM00001SAA
M7 - DSG2407DH00001SAA
M8 - DSG2407DL00001SAA
M9 - DSG2407DM00001SAA

Control Box Assembly

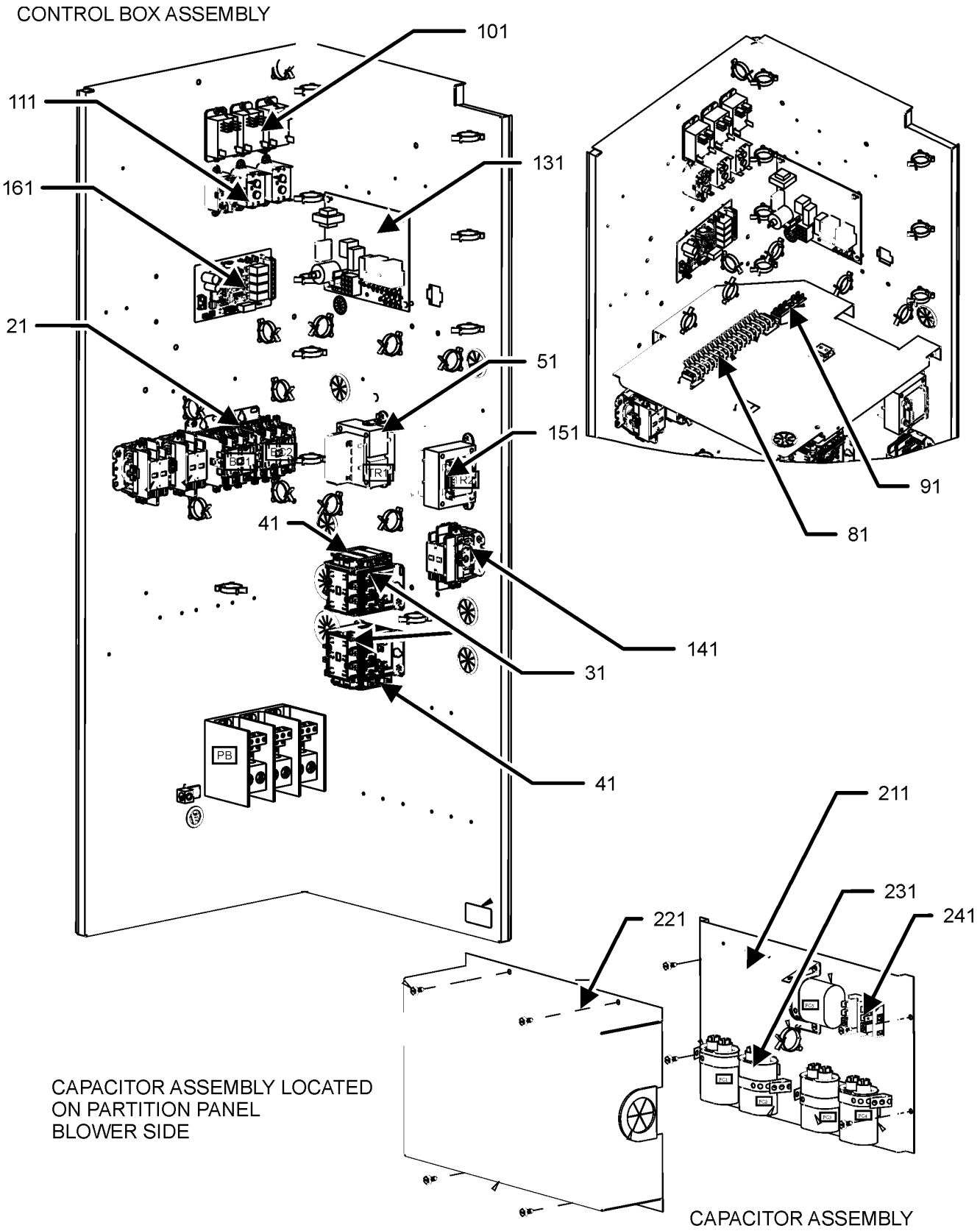

CONTROL BOX ASSEMBLY MAY DIFFER FROM WHAT IS SHOWN

Control Box Assembly

Ref. No:	Part No:	Description:	Ref. No:	Part No:	Description:
Image 1:					
21	CONT3P030024D	CONT, 3 POLE, 30 AMP, 24VAC (QTY 2)			
31	CONT3P030024D	CONT, 3 POLE, 30 AMP, 24VAC (M4, M5, M6, M7, M8, M9)			
31	CONT3P050024D	CONT, 3 POLE, 50 AMP 24VAC (M1, M2, M3)			
41	0130M00913	AUXILLARY SWITCH (QTY 2)			
51	0130L00318	TRANSFORMER (M4, M5, M6)			
51	0130L00319	TRANSFORMER (M1, M2, M3)			
51	0130L00320	TRANSFORMER (M7, M8, M9)			
NS	0130L00217	POWER BLOCK			
81	0130M00038	TERMINAL BOARD			
91	802007090	TERM BOARD			
101	0130M00178	DPDT RELAY 24VAC (QTY 3)			
111	10135604	RELAY (QTY 3)			
131	PCBAG123	PCB, IGNITION, DSI, INTEG			
141	CONT2P030024D	CONT, 2 POLE, 30 AMP, 24VAC			
151	0130M00860	TRANSFORMER (M7, M8, M9)			
151	0130M00862	TRANSFORMER (M4, M5, M6)			
161	PCBCM301V0001	PCB, CONTROL, AIR HANDLER			
211	0121L04684	PLATE CAPACITOR			
221	0121L04920	COVER CAPACITOR			
231	CAP100000370LA	CAP, 10 MFD/370V/OVAL (QTY 4)			
241	B1368250	TERMINAL BLOCK A-10KW			
NS	0164G00004	GROMMET-HORSESHOE 1.75 (QTY 3)			
NS	0130L00005	GROUND-LUG			
NS	20520901	STRAP-CAPACITOR (QTY 4)			
NS	B1392104	UNIVERSAL BUSHING UN 875 (QTY 2)			

Expanded Model Nomenclature

M1 - DSG2403DH00001SAA
M2 - DSG2403DL00001SAA
M3 - DSG2403DM00001SAA
M4 - DSG2404DH00001SAA
M5 - DSG2404DL00001SAA
M6 - DSG2404DM00001SAA
M7 - DSG2407DH00001SAA
M8 - DSG2407DL00001SAA
M9 - DSG2407DM00001SAA

Heat Exchange

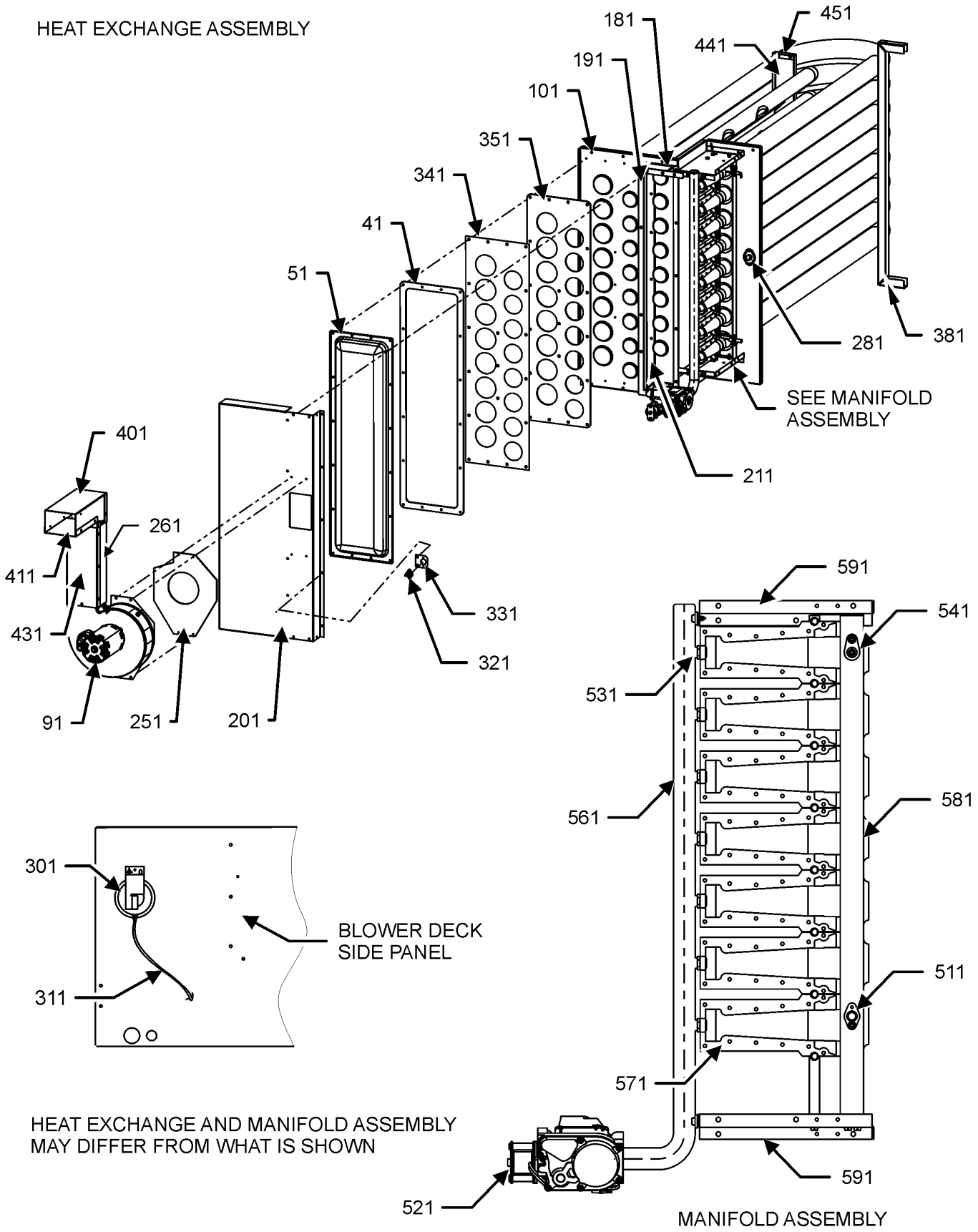

Heat Exchange

Ref. No:	Part No:	Description:
Image 1:		
41	0154L00025	GASKET-COVER REAR 8
51	0121L00545	COVER-REAR 8 TUBE
91	0131L00014	MOTOR-ID VENT
101	0270L02384	ASSY., PARTITION TUBE 6B (M2, M5, M8)
101	0270L00186	ASSY., PARTITION TUBE 8B (M1, M3, M4, M6, M7, M9)
181	0154L00026	INNER COLLECTOR BOX GASKET
191	0154L00027	OUTER COLLECTOR BOX GASKET
201	0121L05122	COVER-COLLECTOR BOX 8 (M1, M4, M7)
201	0121L05124	COVER-COLLECTOR BOX 8 (M2, M5, M8)
201	0121L05125	COVER-COLLECTOR BOX 8 (M3, M6, M9)
211	0121L00546	CHANNEL-COLLECTOR BOX 8
251	0154L00029	ID BLOWER GASKET
261	0121L04774	FLUE, WRAPPER
281	0130M00063	LIMIT, PRIMARY, 140, GOLD
301	11112501	PRESSURE SWITCH
311	A3468601	SILICONE TUBING 3/16 IDX 1/4 (QTY 2)
321	10123532	LIMIT-RESET MAN-GRAY (M2, M5, M8)
321	10123529	LIMIT-RESET MAN-GREEN (M1, M3, M4, M6, M7, M9)
331	0121L04785	BRACKET, FLAME ROLLOUT (M2, M5, M8)
331	0121L00053	BRACKET-FLAME ROLLOUT (M1, M3, M4, M6, M7, M9)
341	0121L00548	PLATE-TUBE PANEL 8
351	0154L00028	GASKET-TUBE PANEL 8
381	0121L00930	SUPPORT-HEAT TUBES 2.25
401	0121L02100	FLUE WRAPPER EXIT
411	0121L00671	FLUE COVER EXIT
431	0121L04775	FLUE, COVER
441	0121L00808	SUPPORT-HEAT TUBES 2.25
451	0121L00823	BRACKET-TUBE SUPPORT (QTY 2)
511	0130L00251	IGNITOR
521	0151M00015	VALVE, GAS (HW) VR83
531	0163L00014	ORIFICE (M1, M3, M4, M6, M7, M9)
531	0163L00015	ORIFICE (M2, M5, M8)
541	0130F00010	FLAME SENSOR
561	0163L00286	MANIFOLD-6 BURNER (M2, M5, M8)
561	0163L00033	MANIFOLD-GAS 8 BURNER (M1, M3, M4, M6, M7, M9)
571	0163L00000	BECKETT BURNER (QTY 8)
581	0121L02691	BRACKET, BURNER, 6 (M2, M5, M8)
581	0121L00635	BRACKET-8 BURNERS (M1, M3, M4, M6, M7, M9)
591	0121G00268	BRACKET-BURNER TOP/BOT (QTY 2)
NS	B1910013	1 1/8 GROMMET
NS	0121L00697	BRACKET GAS VALVE PIPE
NS	0163L00040	FLUE SCREEN

Expanded Model Nomenclature

M1 - DSG2403DH00001SAA
M2 - DSG2403DL00001SAA
M3 - DSG2403DM00001SAA
M4 - DSG2404DH00001SAA
M5 - DSG2404DL00001SAA
M6 - DSG2404DM00001SAA
M7 - DSG2407DH00001SAA
M8 - DSG2407DL00001SAA
M9 - DSG2407DM00001SAA

ACCESSORY PARTS LIST

NOTE: NOT ALL OPTIONS AVAILABLE FOR ALL PRODUCTS

FOR ACCESSORY PARTS SEE THE FOLLOWING PART MANUAL

RP-FIOPL*
RP-EH[X,S]*L*

Accessory Parts

Ref. No:	Part No:	Description:	Ref. No:	Part No:	Description:
Image 1:					
NS	RP-EH[S,X]*L*	ACCESSORY RP MANUAL			
NS	RP-FIOPL*	ACCESSORY RP MANUAL			

Expanded Model Nomenclature

M1 - DSG2403DH00001SAA
M2 - DSG2403DL00001SAA
M3 - DSG2403DM00001SAA
M4 - DSG2404DH00001SAA
M5 - DSG2404DL00001SAA
M6 - DSG2404DM00001SAA
M7 - DSG2407DH00001SAA
M8 - DSG2407DL00001SAA
M9 - DSG2407DM00001SAA