REPAIR PARTS

DSC180 Direct Drive 15 Ton Air Conditioner

DSC1803D000001SAA
DSC1804D000001SAA
DSC1807D000001SAA

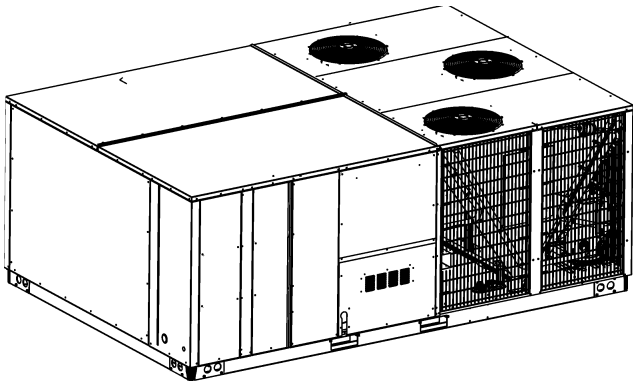

This manual is to be used by qualified technicians only.

© 2024 DAIKIN COMFORT TECHNOLOGIES MANUFACTURING, L.P. ◊ 19001 Kermier Rd. ◊ Waller, TX 77484

Index

Functional Parts List 3

Illustration and Parts ..... 4 - 17

Views shown are for parts illustrations only, not servicing procedures.

Text Codes:

AR - As Required
NA - Not Available
NS - Not Shown
00000000 - See Note
QTY - Quantity Example (QTY 3) (If Quantity not shown, Quantity = 1)
M - Model Example (M1) (If M Code not shown, then part is used on all Models)

Expanded Model Nomenclature:

Example
M1 - Model#1
M2 - Model#2
M3 - Model#3

Daikin Comfort Technologies Manufacturing , L.P. is not responsible for personal injury or property damage resulting from improper service. Review all service information before beginning repairs.

Warranty service must be performed by an authorized technician, using authorized factory parts. If service is required after the warranty expires, Daikin Comfort Technologies Manufacturing , L.P. also recommends contacting an authorized technician and using authorized factory parts.

Daikin Comfort Technologies Manufacturing , L.P. reserves the right to discontinue, or change at any time, specifications or designs without notice or without incurring obligations.

For assistance within the U.S.A. contact:
Equipment Support
Daikin Comfort Technologies Manufacturing , L.P.
19001 Kermier Road
Waller, Texas 77484
855-770-5678-Telephone
713-863-2382-Facsimile

For assistance outside the U.S.A. contact:
International Division
Daikin Comfort Technologies Manufacturing , L.P.
19001 Kermier Road
Waller, Texas 77484
713-861-2500-Telephone
713-863-2382-Facsimile

Functional Parts

Part No:	Description:
0130M00913	AUXILLARY SWITCH (QTY 2)
0131L00124	BLOWER MOTOR, 3.5 HP (M2)
0131L00122	BLOWER MOTOR, 3.5 HP (M1)
0131L00125	BLOWER MOTOR, 3.5 HP (M3)
CAP100000370LA	CAP, 10 MFD/370V/OVAL (M1, M2)
CAP050000440LA	CAPACITOR (M3)
YP81K1TTFEASH	COMPRESSOR (M3)
YP81K1TTF5ERZ	COMPRESSOR (M1)
YP81K1TTFDASH	COMPRESSOR (M2)
0201L00843	COND COIL MICROCHNL 16MM (QTY 2)
CONT3P030024D	CONT, 3 POLE, 30 AMP, 24VAC (M2, M3)
CONT3P030024D	CONT, 3 POLE, 30 AMP, 24VAC (QTY 2)
CONT3P050024D	CONT, 3 POLE, 50 AMP 24VAC (M1)
0130L00275	CRANK CASE HEATER, 70W, 575V (M3)
0130L00273	CRANK CASE HEATER-70W 240V (M1)
0130L00274	CRANK CASE HEATER-70W, 480V (M2)
0130M00178	DPDT RELAY 24VAC (QTY 3)
0202L00724	EVAPORATOR COIL ASSEMBLY
0251L00195	EXPANSION VALVE ASSEMBLY C1
0251L00196	EXPANSION VALVE ASSEMBLY C2
0131M00907	MOTOR, HP, 1/3, OD (M2)
0131M00908	MOTOR, HP, 1/3, OD, LAK (M3)
0131M00906	MOTOR, HP, 1/3, SP, 1, PL, 6 (M1)
PCBCM301V0001	PCB, CONTROL, AIR HANDLER
0131L00731	PROGRAMMED MOTOR CONTROLLER
10135604	RELAY (QTY 3)
SER2A08012	SENSATA, R32 SENSOR
0130M00732	SWITCH LOW PRESSURE (QTY 2)
0130M00730	SWITCH, HIGH PRESSURE (QTY 2)
0130L00318	TRANSFORMER (M2)
0130L00319	TRANSFORMER (M1)
0130L00320	TRANSFORMER (M3)

Expanded Model Nomenclature

M1 - DSC1803D000001SAA
M2 - DSC1804D000001SAA
M3 - DSC1807D000001SAA

RP-FIOPL*	ACCESSORY RP MANUAL
RP-EH[S,X]*L*	ACCESSORY RP MANUAL

Cabinet Assembly

CABINET ASSEMBLY

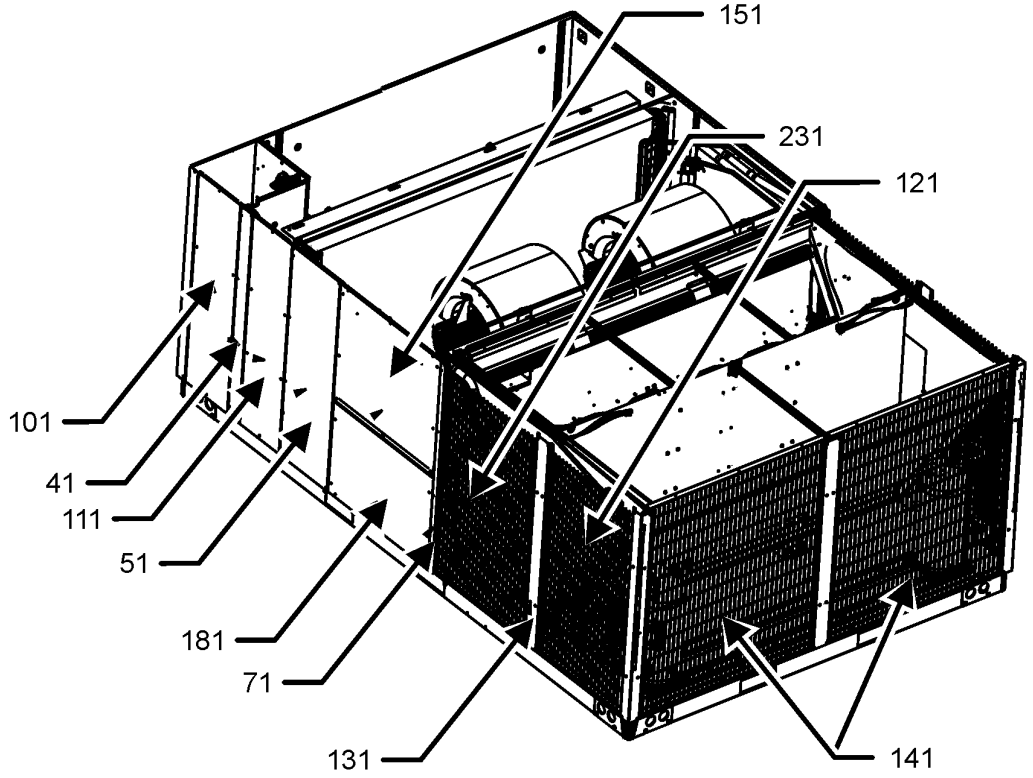

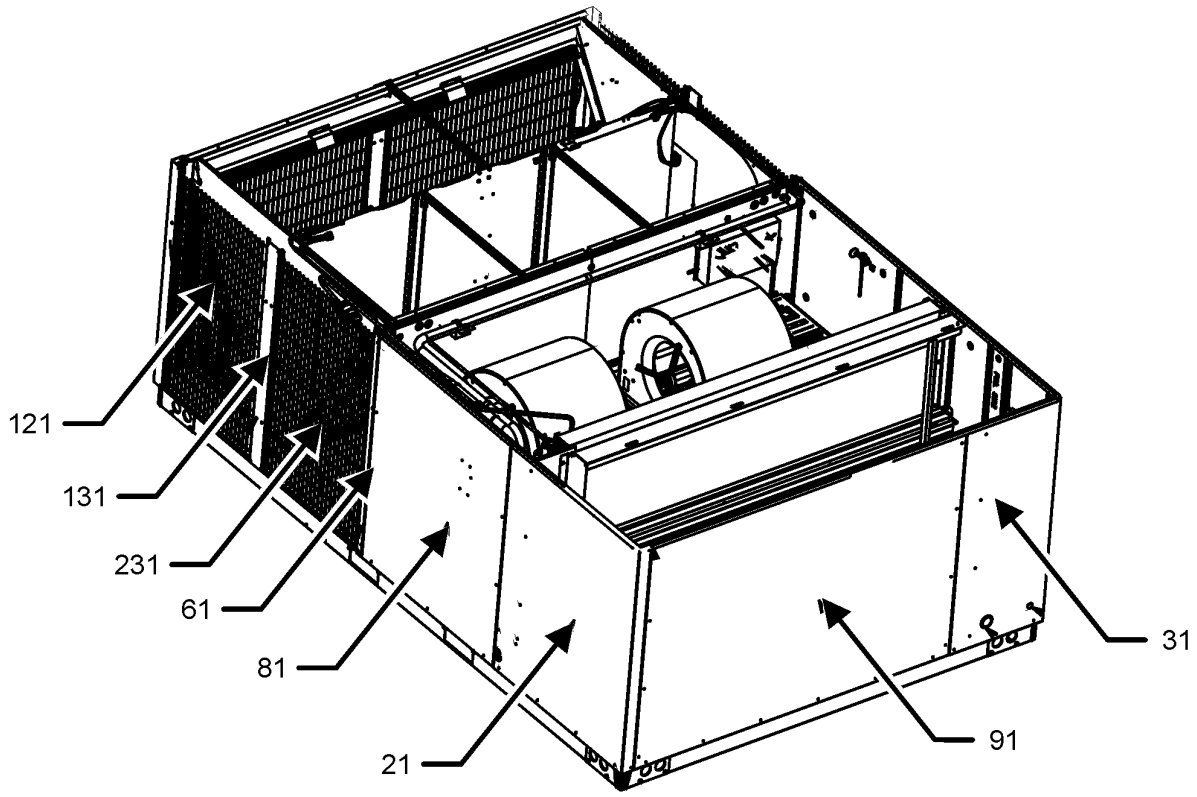

CABINET ASSEMBLY MAY DIFFER FROM WHAT IS SHOWN

Cabinet Assembly

Ref. No:	Part No:	Description:	Ref. No:	Part No:	Description:
Image 1:					
21	0121L00681SB	PAINTED EVAP PANEL			
31	0121L05536SB	PAINTED, PANEL CONTROL CORNER			
41	0121L05535SB	PAINTED, POST CONTRO/FILTER			
51	0121L05534SB	PAINTED, DOOR POST EVAP BLOWER			
61	0121L04679SB	PAINTED POST PARTITION EVAP			
71	0121L04681SB	PAINTED POST PARTITION GAS			
81	0121L00685SB	PNT DOOR BLWR EVAP SIDE			
91	0121L00688SB	PNT ACCESSORY PANEL			
101	0121L05533SB	PAINTED, DOOR, CONTROL			
111	0121L05532SB	PAINTED, DOOR, FILTER			
121	0152L00022	GRILL CONDENSER (QTY 2)			
131	0121L01144SB	POST COND PANEL PNT			
141	0152L00019	GRILL CONDENSER (QTY 2)			
151	0121L05352SB	PAINTED, DOOR-BLOWER, GAS SIDE			
181	0121L00708SB	PNT DOOR ELECTRIC HEAT			
231	0152L00023	GRILL CONDENSER (QTY 2)			
NS	0160L00136	AIR FILTER (QTY 8)			
NS	0270L02482	ASSY., FILTER RACK			
NS	B1392156	PLASTIC CAP 2 1/8			
NS	0163M00097	SCREW WASHED (QTY 104)			

Expanded Model Nomenclature

M1 - DSC1803D000001SAA
M2 - DSC1804D000001SAA
M3 - DSC1807D000001SAA

Top Panel Indoor/Outdoor Assembly

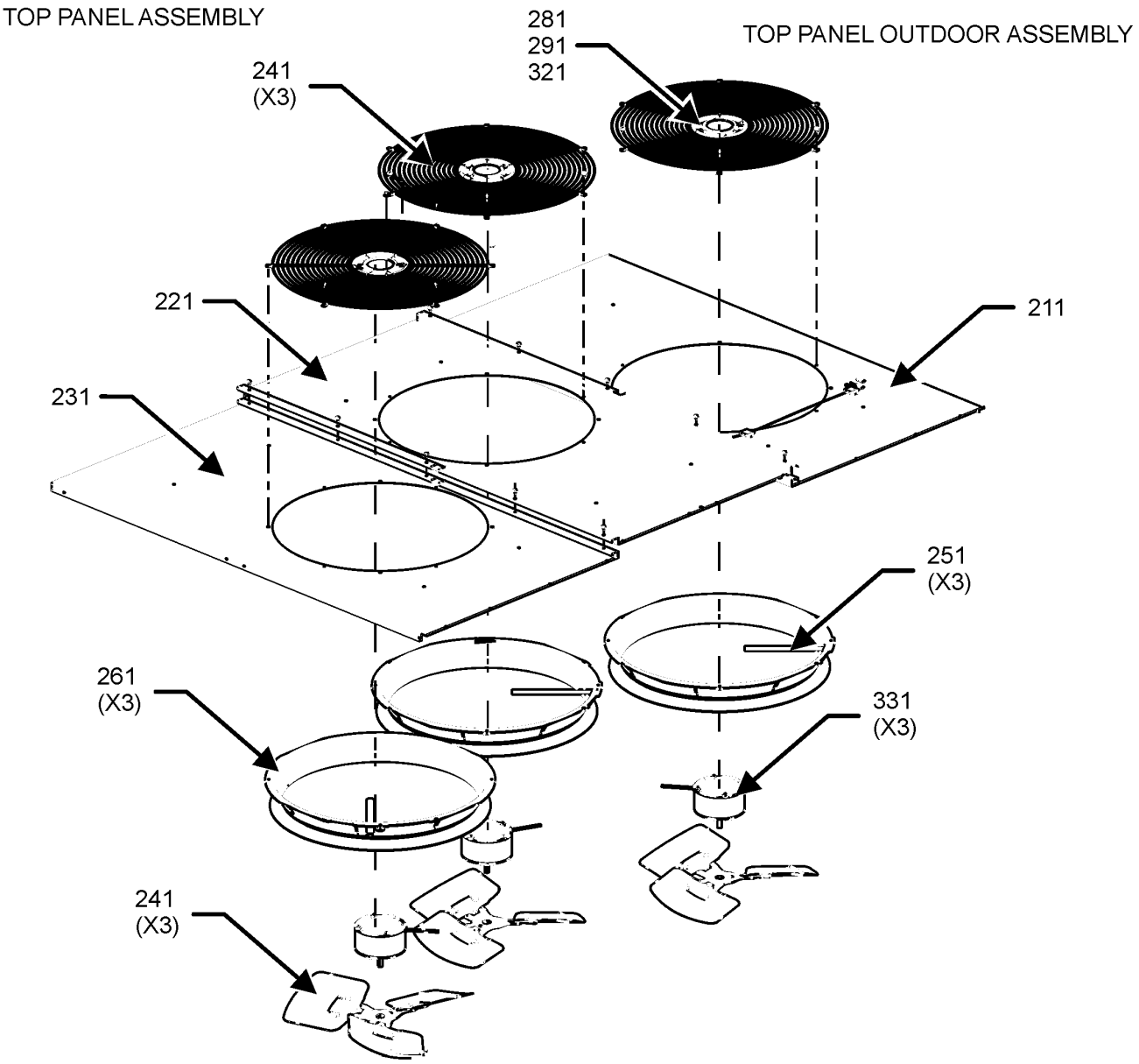

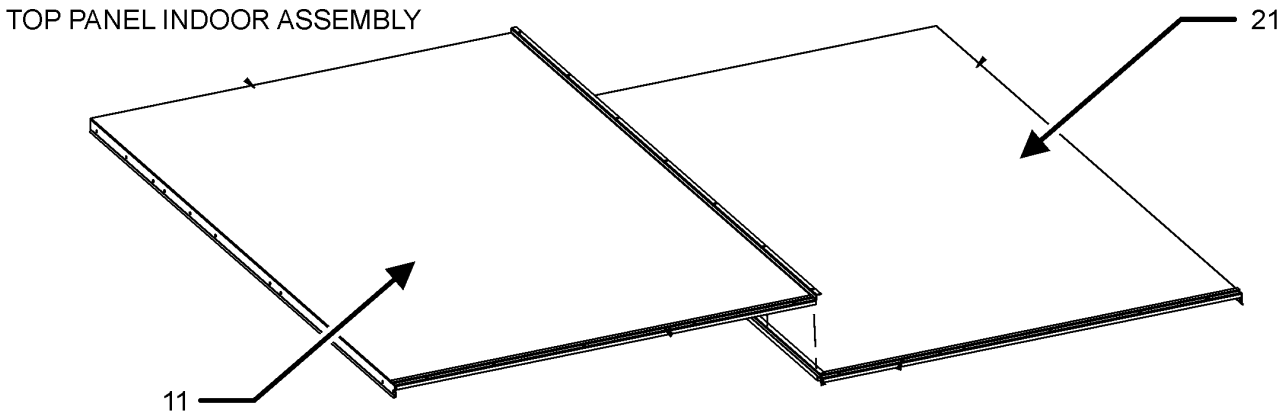

TOP PANEL ASSEMBLIES MAY DIFFER FROM WHAT IS SHOWN

Top Panel Indoor/Outdoor Assembly

Ref. No:	Part No:	Description:	Ref. No:	Part No:	Description:
Image 1:					
11	0121L00693SB	TOP CONTROL SIDE PNT			
21	0121L00694SB	TOP PANEL ASSY PNT			
211	0121L04955SB	PAINTED TOP FAN CNTL SIDE			
221	0121L05238SB	PAINTED, TOP-FAN CENTER			
231	0121L05239SB	PAINTED, TOP-FAN EVAP SIDE			
241	0152L00025	GRILLE-FAN (QTY 3)			
251	0161R00124	CONDUIT (QTY 3)			
261	0161R00048	MOLDED RING VENTURI 22 (QTY 3)			
271	10625733	BLADE-FAN 22" ALUM CCW (QTY 3)			
281	0163M00006P	NUT ACORN 5/16 HEX BLACK (QTY 12)			
291	0163M00005P	WASHER BLACK .50 OD .218ID (QTY 12)			
321	M0272803	WASHER LOCK (QTY 6)			
331	0131M00907	MOTOR, HP, 1/3, OD (M2)			
331	0131M00908	MOTOR, HP, 1/3, OD, LAK (M3)			
331	0131M00906	MOTOR, HP, 1/3, SP, 1, PL, 6 (M1)			
NS	0259L02125	WIRE HARNESS ASSY			

Expanded Model Nomenclature

M1 - DSC1803D000001SAA
M2 - DSC1804D000001SAA
M3 - DSC1807D000001SAA

Tubing Compressor Assembly

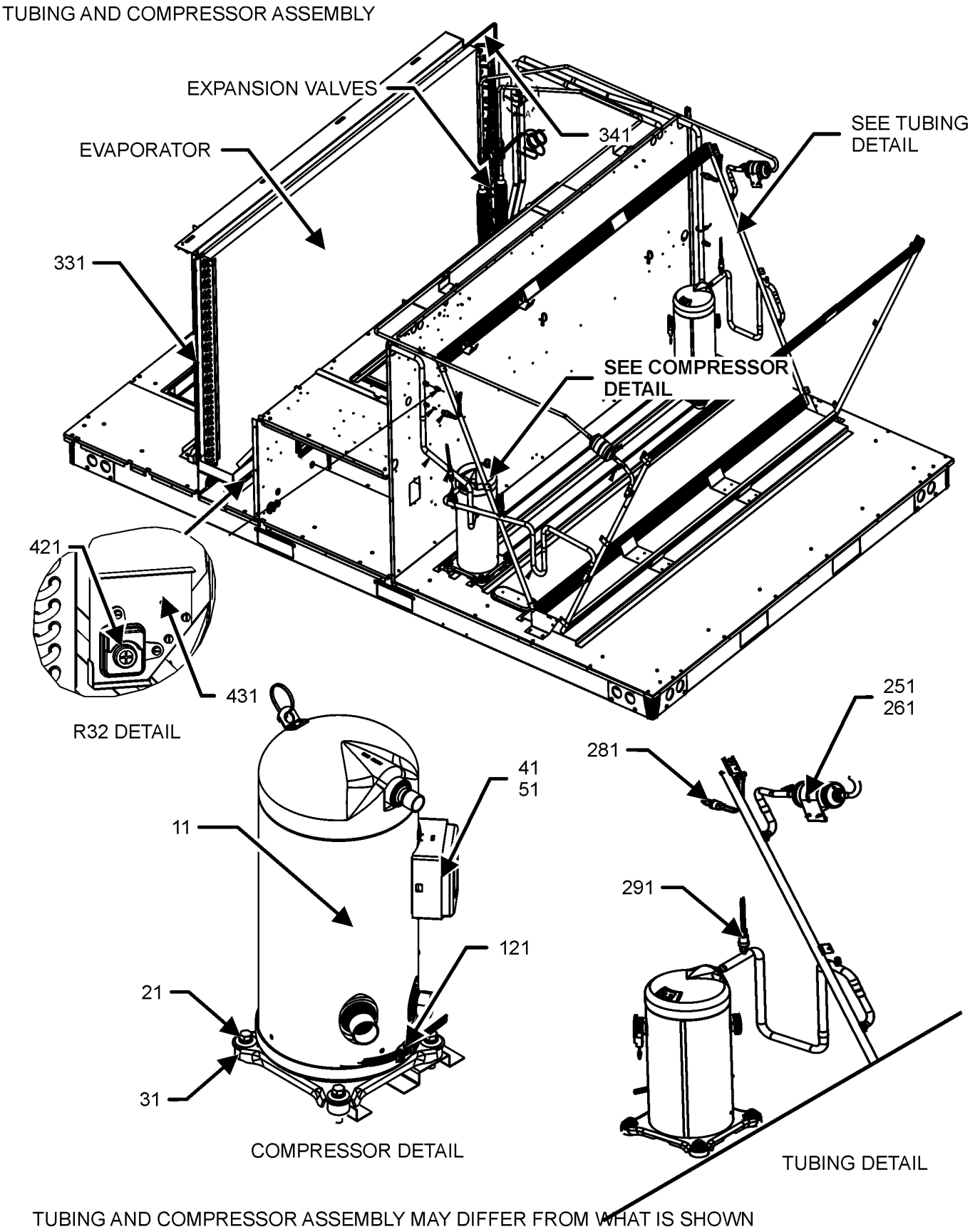

TUBING AND COMPRESSOR ASSEMBLY MAY DIFFER FROM WHAT IS SHOWN

Tubing Compressor Assembly

Ref. No:	Part No:	Description:	Ref. No:	Part No:	Description:

Image 1:

11	YP81K1TTF5ERZ	COMPRESSOR (M1)
11	YP81K1TTFDASH	COMPRESSOR (M2)
11	YP81K1TTFEASH	COMPRESSOR (M3)
21	0164M00018	GROMMET COMPRESSOR (QTY 8)
31	B1393740	COMP BOLT SLEEVE (QTY 8)
41	0159L00160	HARNESS, COMPRESSOR SCROLL (M1)
41	0159L00164	HARNESS, COMPRESSOR SCROLL (M2, M3)
51	0159L00214	HARNESS, COMP SCROLL (M2, M3)
51	0159L00161	HARNESS, COMPRESSOR SCROLL (M1)
121	0130L00275	CRANK CASE HEATER, 70W, 575V (M3)
121	0130L00273	CRANK CASE HEATER-70W 240V (M1)
121	0130L00274	CRANK CASE HEATER-70W, 480V (M2)
251	0162M00469	FILTER DRIER
261	0162M00469	FILTER DRIER
281	0130M00732	SWITCH LOW PRESSURE (QTY 2)
291	0130M00730	SWITCH, HIGH PRESSURE (QTY 2)
331	0121L04512	BLOCK OFF EVAPORATOR
341	0121L05428	BLOCK OFF - EVAPORATOR
421	SER2A08012	SENSATA, R32 SENSOR
431	0121L05665	BRKT, SENSOR MOUNT
NS	B1373315	ACCESS FITTING (QTY 4)
NS	0141L00029	BOARD FORK (QTY 2)
NS	0121L00724	BRACKET FORK BOARD (QTY 4)
NS	0151M00104	VALVE CORE (QTY 8)

Expanded Model Nomenclature

M1 - DSC1803D000001SAA
M2 - DSC1804D000001SAA
M3 - DSC1807D000001SAA

Partition,Evaporator,Condenser Assembly

PARTITION, EVAPORATOR, CONDENSER ASSEMBLY

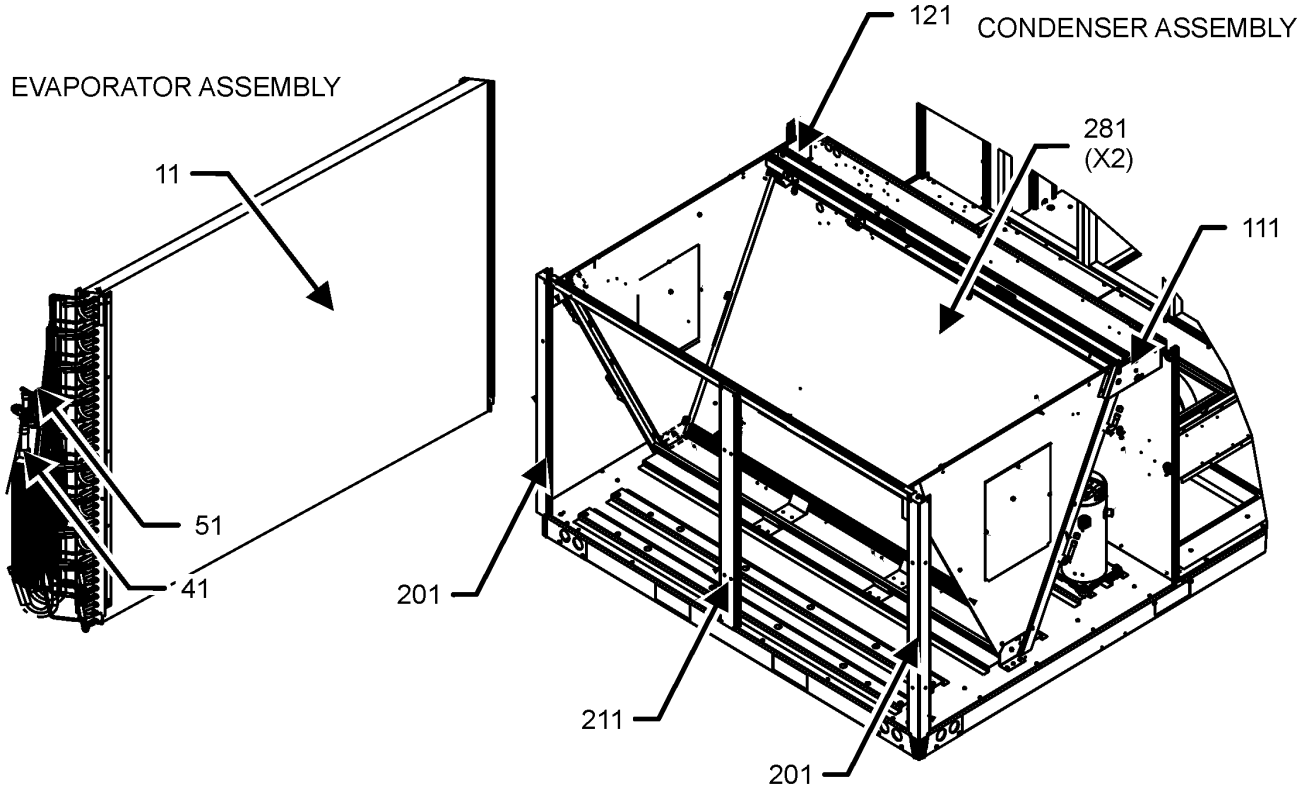

PARTITION ASSEMBLY

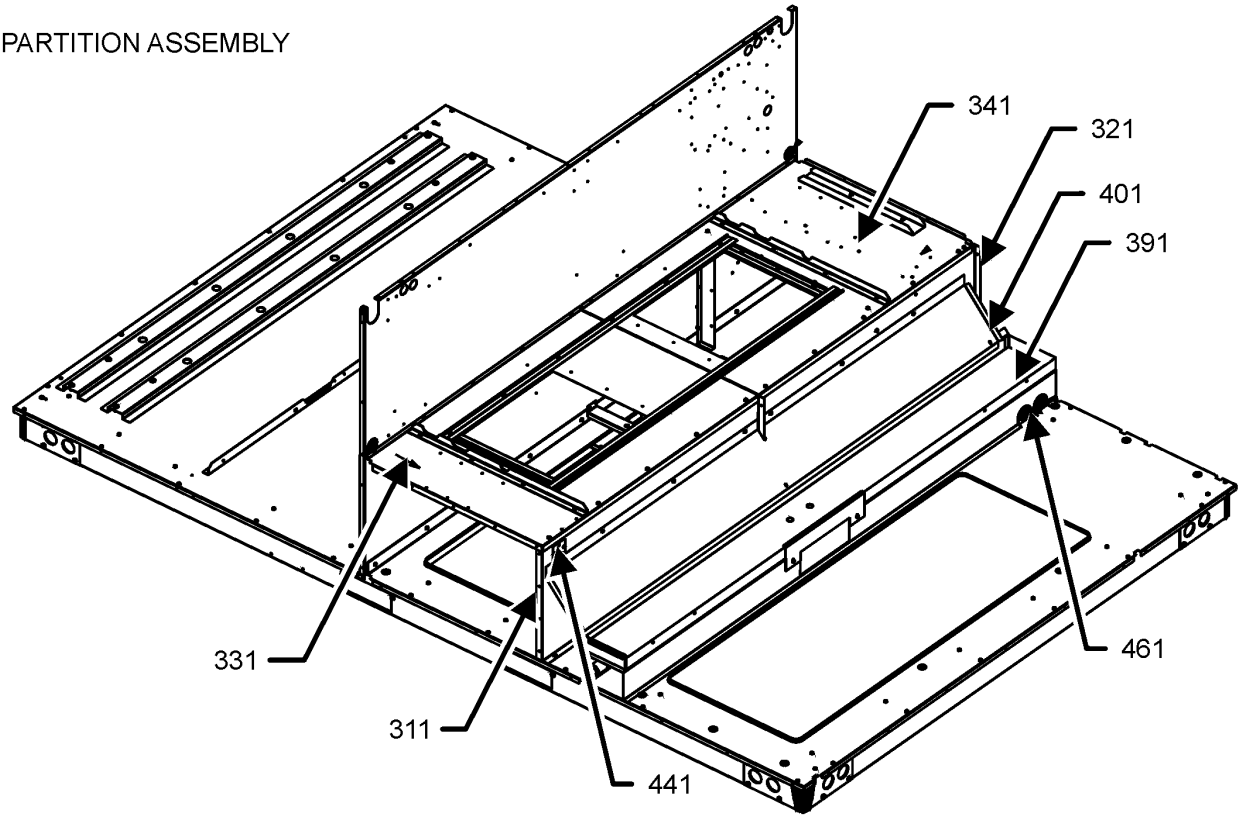

PARTITION, EVAPORATOR, CONDENSER ASSEMBLY MAY DIFFER FROM WHAT IS SHOWN

Partition,Evaporator,Condenser Assembly

Ref. No:	Part No:	Description:	Ref. No:	Part No:	Description:

Image 1:

11	0202L00724	EVAPORATOR COIL ASSEMBLY
41	0251L00195	EXPANSION VALVE ASSEMBLY C1
51	0251L00196	EXPANSION VALVE ASSEMBLY C2
111	0121L04440	BLOCKOFF COND TOP INSIDE
121	0121L04441	BRACKET CONDENSER END
201	0121L04608SB	PAINTED CORNER POST (QTY 2)
211	0121L01144SB	POST COND PANEL PNT
281	0201L00843	COND COIL MICROCHNL 16MM (QTY 2)
311	0121L05236	DECK, SIDE DUCT END
321	0121L05351	DECK-SIDE, HEAT END
331	0121L05346	DECK, BLOWER EVAP SIDE
341	0121L05345	DECK, CONTROL BOX END
391	0270L02431DG	PAINTED DRAIN PAN WELDMENT
401	0121L05431	SHIELD, BLOWOFF
441	0121L00321	COVER SMOKE DETECTOR
461	0164G00004	GROMMET HORSESHOE 1.75 (QTY 3)
NS	0121L00593	COVER FLUW HOLE
NS	0163L00045	FITTING DRAIN EXIT
NS	0121L04841	MOUNTING PLATE-ELECT HEAT
NS	0121L04881	SUPPORT-ELECTRIC HEAT

Expanded Model Nomenclature

M1 - DSC1803D000001SAA
M2 - DSC1804D000001SAA
M3 - DSC1807D000001SAA

Blower Assembly

BLOWER ASSEMBLY

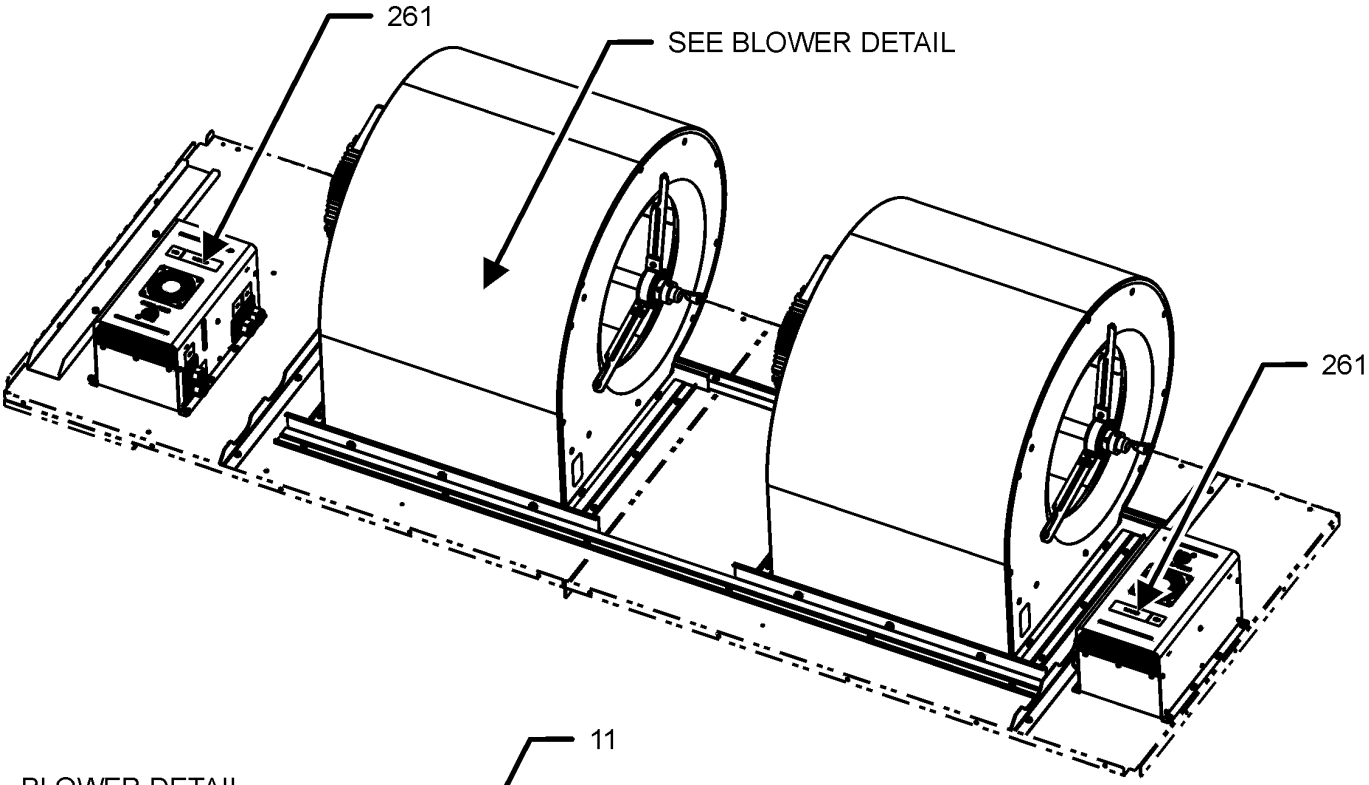

BLOWER DETAIL

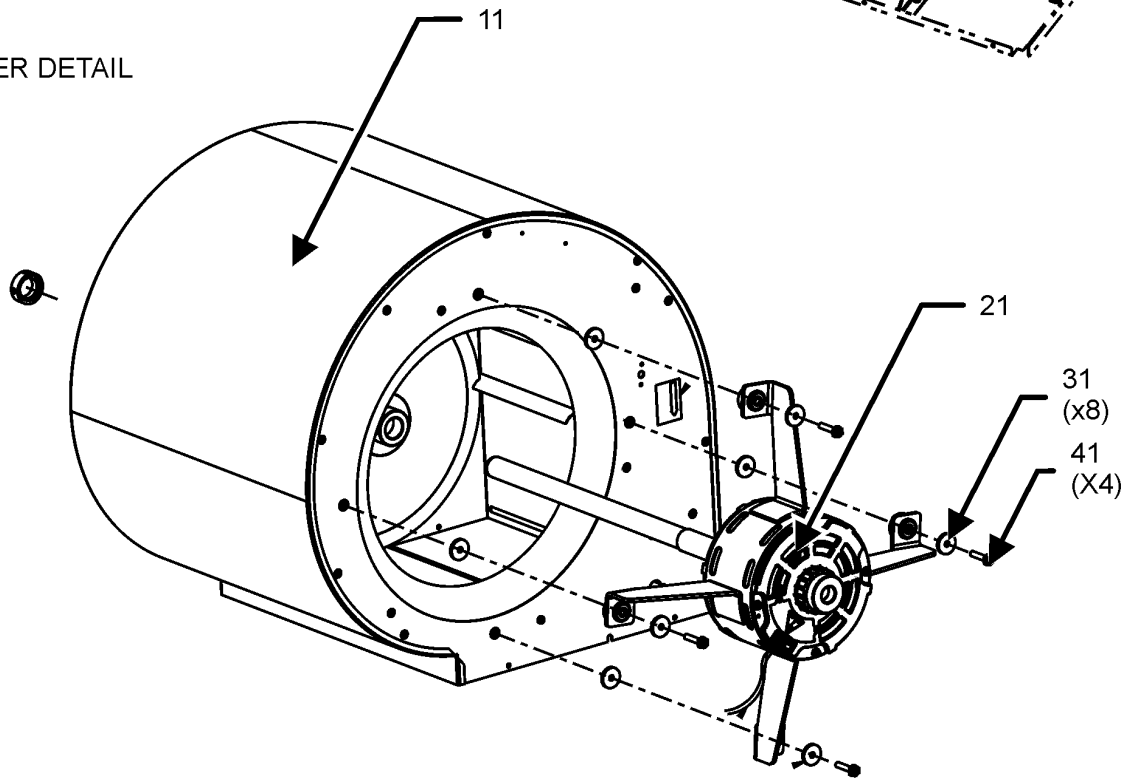

BLOWER ASSEMBLY MAY DIFFER FROM WHAT IS SHOWN

Blower Assembly

Ref. No:	Part No:	Description:	Ref. No:	Part No:	Description:
Image 1:					
11	0271L00385	BLOWER ASSEMBLY (QTY 2)			
21	0131L00122	BLOWER MOTOR, 3.5 HP (M1)			
21	0131L00124	BLOWER MOTOR, 3.5 HP (M2)			
21	0131L00125	BLOWER MOTOR, 3.5 HP (M3)			
31	B1392918	WASHER FLAT 1/4 IDX1OD (QTY 16)			
41	M0250565	SCREW TC 1.25 (QTY 8)			
261	0131L00731	PROGRAMMED MOTOR CONTROLLER			

Expanded Model Nomenclature

M1 - DSC1803D000001SAA
M2 - DSC1804D000001SAA
M3 - DSC1807D000001SAA

Control Box Assembly

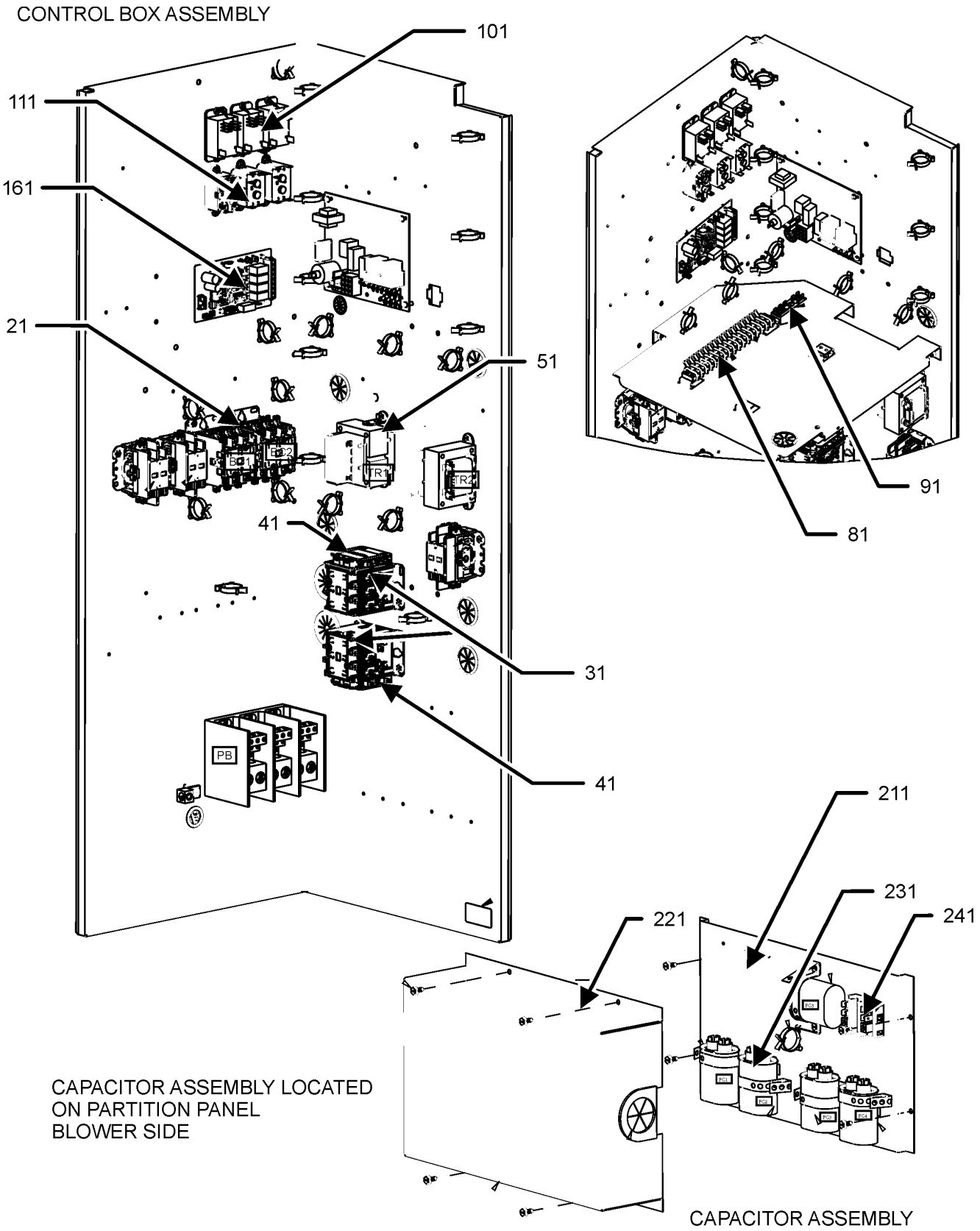

CONTROL BOX ASSEMBLY MAY DIFFER FROM WHAT IS SHOWN

Control Box Assembly

Ref. No:	Part No:	Description:	Ref. No:	Part No:	Description:
Image 1:					
21	CONT3P030024D	CONT, 3 POLE, 30 AMP, 24VAC (QTY 2)			
31	CONT3P030024D	CONT, 3 POLE, 30 AMP, 24VAC (M2, M3)			
31	CONT3P050024D	CONT, 3 POLE, 50 AMP 24VAC (M1)			
41	0130M00913	AUXILLARY SWITCH (QTY 2)			
51	0130L00318	TRANSFORMER (M2)			
51	0130L00319	TRANSFORMER (M1)			
51	0130L00320	TRANSFORMER (M3)			
81	0130M00038	TERMINAL BOARD			
91	802007090	TERM BOARD			
101	0130M00178	DPDT RELAY 24VAC (QTY 3)			
111	10135604	RELAY (QTY 3)			
161	PCBCM301V0001	PCB, CONTROL, AIR HANDLER			
211	0121L04684	PLATE CAPACITOR			
221	0121L04920	COVER, CAPACITOR			
231	CAP100000370LA	CAP, 10 MFD/370V/OVAL (M1, M2)			
231	CAP050000440LA	CAPACITOR (M3)			
241	B1368250	TERMINAL BLOCK A-10KW			
NS	0164G00004	GROMMET-HORSESHOE 1.75 (QTY 3)			
NS	0259L00118	HARNESS COND FAN LONG			
NS	0259L00116	HARNESS COND FAN SHORT			
NS	0130L00217	POWER BLOCK			
NS	20520901	STRAP-CAPACITOR (QTY 3)			
NS	B1392104	UNIVERSAL BUSHING UN 875 (QTY 2)			

Expanded Model Nomenclature

M1 - DSC1803D000001SAA
M2 - DSC1804D000001SAA
M3 - DSC1807D000001SAA

ACCESSORY PARTS LIST

NOTE: NOT ALL OPTIONS AVAILABLE FOR ALL PRODUCTS

FOR ACCESSORY PARTS SEE THE FOLLOWING PART MANUAL

RP-FIOPL*
RP-EH[X,S]*L*

ACCESSORY PARTS

Ref. No:	Part No:	Description:	Ref. No:	Part No:	Description:

Image 1:

NS	RP-EH[S,X]*L*	ACCESSORY RP MANUAL
NS	RP-FIOPL*	ACCESSORY RP MANUAL

Expanded Model Nomenclature

M1 - DSC1803D000001SAA
M2 - DSC1804D000001SAA
M3 - DSC1807D000001SAA