REPAIR PARTS

DFG300 Direct Drive 25 Ton Gas Unit

DFG3003DH00001SAA
DFG3003DL00001SAA
DFG3003DM00001SAA
DFG3004DH00001SAA
DFG3004DL00001SAA
DFG3004DM00001SAA
DFG3007DH00001SAA
DFG3007DL00001SAA
DFG3007DM00001SAA

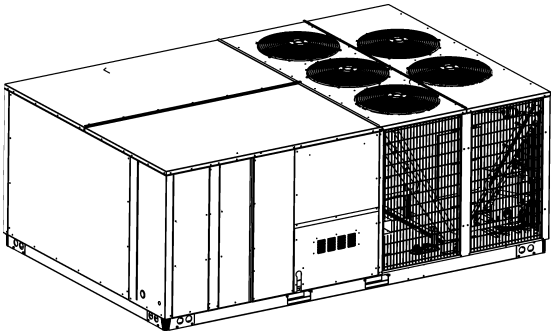

This manual is to be used by qualified technicians only.

© 2022 , 2024 DAIKIN COMFORT TECHNOLOGIES MANUFACTURING, L.P. ◊ 19001 Kermier Rd. ◊ Waller, TX 77484

RP-D1347 www.daikinac.com May 2024

Index

Functional Parts List 3

Illustration and Parts ..... 4 - 19

Views shown are for parts illustrations only, not servicing procedures.

Text Codes:

AR - As Required
NA - Not Available
NS - Not Shown
00000000 - See Note
QTY - Quantity Example (QTY 3) (If Quantity not shown, Quantity = 1)
M - Model Example (M1) (If M Code not shown, then part is used on all Models)

Expanded Model Nomenclature:

Example
M1 - Model#1
M2 - Model#2
M3 - Model#3

Daikin Comfort Technologies Manufacturing , L.P. is not responsible for personal injury or property damage resulting from improper service. Review all service information before beginning repairs.

Warranty service must be performed by an authorized technician, using authorized factory parts. If service is required after the warranty expires, Daikin Comfort Technologies Manufacturing , L.P. also recommends contacting an authorized technician and using authorized factory parts.

Daikin Comfort Technologies Manufacturing , L.P. reserves the right to discontinue, or change at any time, specifications or designs without notice or without incurring obligations.

For assistance within the U.S.A. contact:
Equipment Support
Daikin Comfort Technologies Manufacturing , L.P.
19001 Kermier Road
Waller, Texas 77484
855-770-5678-Telephone
713-863-2382-Facsimile

For assistance outside the U.S.A. contact:
International Division
Daikin Comfort Technologies Manufacturing , L.P.
19001 Kermier Road
Waller, Texas 77484
713-861-2500-Telephone
713-863-2382-Facsimile

Functional Parts

Part No:	Description:
0202L00610	ASSY., EVAPORATOR COIL
0251L00136	ASSY., EXPANSION VALVE C1
0251L00144	ASSY., EXPANSION VALVE C2
0130M00249	AUXILLARY SWITCH (QTY 2)
0163L00000	BECKETT BURNER (QTY 8)
CAP100000370LA	CAP, 10 MFD/370V/OVAL (QTY 5)
ZP137KCETFD155	Comp, 135,000, 460/60/3 (M4, M5, M6)
ZP137KCETFE155	Comp, 136,000, 575/60/3 (M7, M8, M9)
ZP137KCETF5250	COMP, 137,000, 200/230/60/3 (M1, M2, M3)
0201L00845	COND COIL, MICROCHNL 25MM (QTY 2)
CONT2P025024V	CONT 2 POLE 25 AMP 24 VAC (QTY 3)
CONT3P030024V	CONT 3 POLE 30 AMP 24 VAC (QTY 2)
CONT3P030024V	CONT 3 POLE 30 AMP 24 VAC (M4, M5, M6, M7, M8, M9)
CONT3P060024V	CONT, 3 POLE, 60 AMP, 24VAC (M1, M2, M3)
0130L00276	CRANK CASE HEATER, 90W, 240V (M1, M2, M3)
0130L00277	CRANK CASE HEATER, 90W, 480V (M4, M5, M6)
0130L00278	CRANK CASE HEATER, 90W, 575V (M7, M8, M9)
0130M00178	DPDT RELAY 24VAC (QTY 3)
0130F00010	FLAME SENSOR
0130L00251	IGNITOR
20269903	LIMIT (QTY 2)
0130M00063	LIMIT, PRIMARY, 140, GOLD
10123532	LIMIT-RESET MAN-GRAY (M2, M3, M5, M6, M8, M9)
10123529	LIMIT-RESET MAN-GREEN (M1, M4, M7)
0131L00214	MOTOR 5.0 HP (M1, M2, M3)
0131L00216	MOTOR 5.0 HP (M7, M8, M9)
0131L00215	MOTOR 5.0 HP (M4, M5, M6)
0131M00930	Nidec Motor, 1/2 HP (M7, M8, M9)
0131M00925	Nidec Motor, 1/2 HP (M1, M2, M3)
0131M00926	Nidec Motor, 1/2 HP (M4, M5, M6)
PCBAG123	PCB, IGNITION, DSI, INTEG
11112501	PRESSURE SWITCH
0131L00376	PROGRAM MOTOR CONTROLLER (M3, M6, M9)
0131L00377	PROGRAM MOTOR CONTROLLER (M2, M5, M8)
0131L00375	PROGRAM MOTOR CONTROLLER (M1, M4, M7)
10135604	RELAY (QTY 2)
0130M00738	SWITCH HIGH PRESSURE (QTY 2)
0130M00732	SWITCH LOW PRESSURE (QTY 2)
0130L00205	TRANSFORMER (M1, M2, M3)
0130M00597	TRANSFORMER (M7, M8, M9)
0130L00206	TRANSFORMER (M4, M5, M6)
0130L00207	TRANSFORMER (M7, M8, M9)
0130M00596	TRANSFORMER (M4, M5, M6)
0151M00015	VALVE, GAS (HW) VR83

SPECIAL PARTS

RP-FIOPL*	ACCESSORY RP MANUAL
RP-EH[S,X]*L*	ACCESSORY RP MANUAL

Expanded Model Nomenclature

M1 - DFG3003DH00001SAA
M2 - DFG3003DL00001SAA
M3 - DFG3003DM00001SAA
M4 - DFG3004DH00001SAA
M5 - DFG3004DL00001SAA
M6 - DFG3004DM00001SAA
M7 - DFG3007DH00001SAA
M8 - DFG3007DL00001SAA
M9 - DFG3007DM00001SAA

Cabinet Assembly

CABINET ASSEMBLY

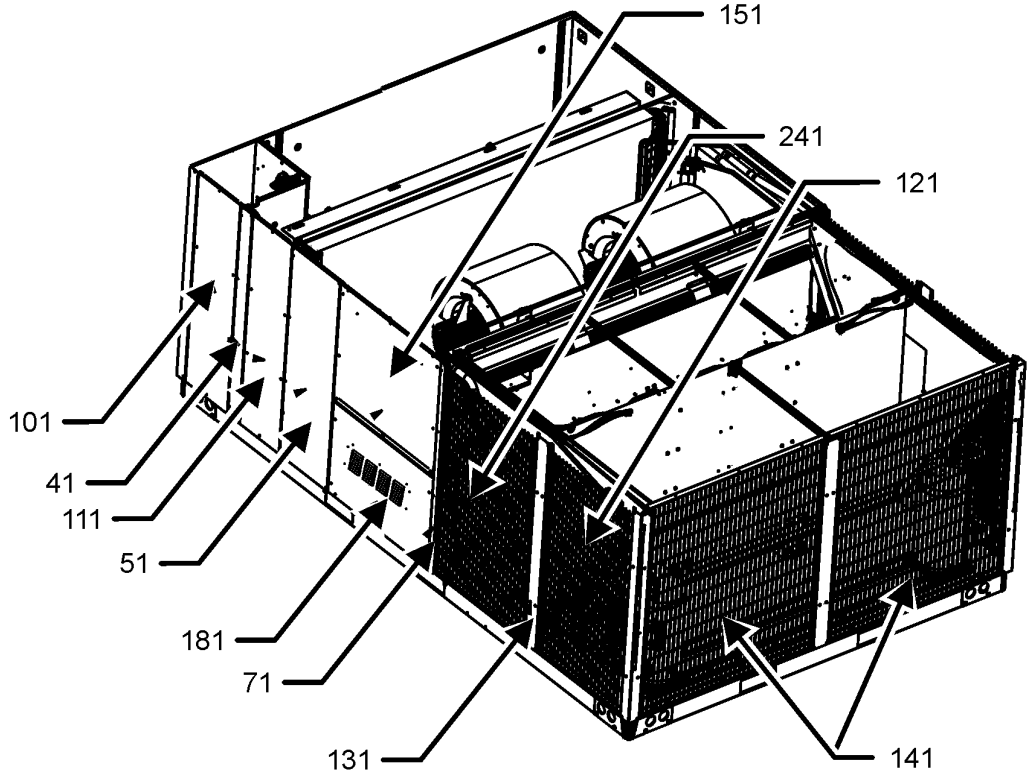

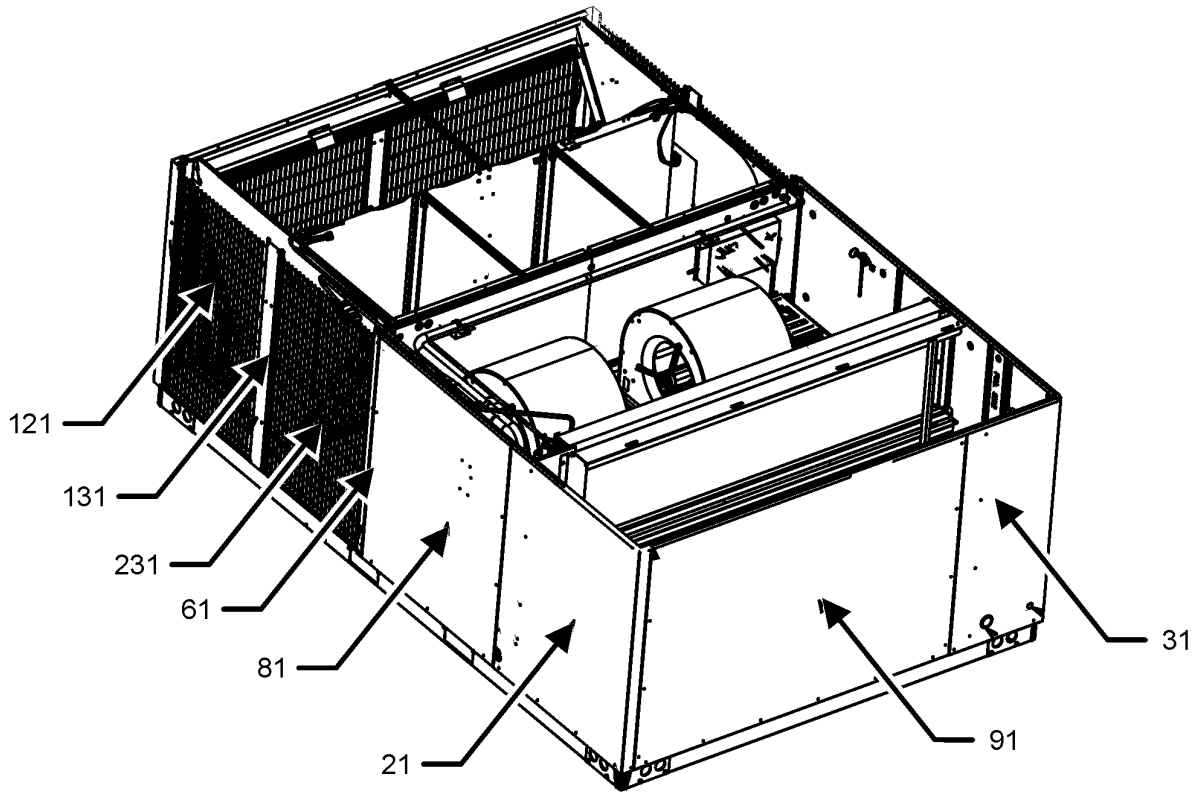

CABINET ASSEMBLY MAY DIFFER FROM WHAT IS SHOWN

Cabinet Assembly

Ref. No:	Part No:	Description:	Ref. No:	Part No:	Description:
Image 1:					
21	0121L00681SB	PAINTED EVAP PANEL			
31	0121L04499SB	PAINTED PANEL CONTROL CORNER			
41	0121L04498SB	PAINTED POST CONTROL/FILTER			
51	0121L00710SB	PNT POST/BLOWER DOOR			
61	0121L04679SB	PAINTED POST PARTITION EVAP			
71	0121L04681SB	PAINTED POST PARTITION GAS			
81	0121L00685SB	PNT DOOR BLWR EVAP SIDE			
91	0121L00688SB	PNT ACCESSORY PANEL			
101	0121L00687SB	PNT CONTROL DOOR			
111	0121L00686SB	PNT DOOR FILTER			
121	0152L00022	GRILL CONDENSER (QTY 2)			
131	0121L01144SB	POST COND PANEL PNT (QTY 2)			
141	0152L00019	GRILL CONDENSER (QTY 2)			
151	0121L00713SB	PNT DOOR BLOWER GAS SIDE			
181	0121L00562SB	PNT, HOOD-COMBUSTION AIR			
231	0152L00023	GRILL CONDENSER			
241	0152L00024	GRILLE-CONDENSOR, GAS FLUE			
NS	B1392156	PLASTIC CAP 2 1/8			
NS	0163M00097	SCREW WASHED (QTY 104)			

Expanded Model Nomenclature

M1 - DFG3003DH00001SAA
M2 - DFG3003DL00001SAA
M3 - DFG3003DM00001SAA
M4 - DFG3004DH00001SAA
M5 - DFG3004DL00001SAA
M6 - DFG3004DM00001SAA
M7 - DFG3007DH00001SAA
M8 - DFG3007DL00001SAA
M9 - DFG3007DM00001SAA

Top Panel Assembly

TOP PANEL ASSEMBLY

TOP PANEL
OUTDOOR ASSEMBLY

281
291
321

241
(X5)

211

221

261
(X5)

251
(X5)

331
(X5)

241
(X5)

TOP PANEL INDOOR ASSEMBLY

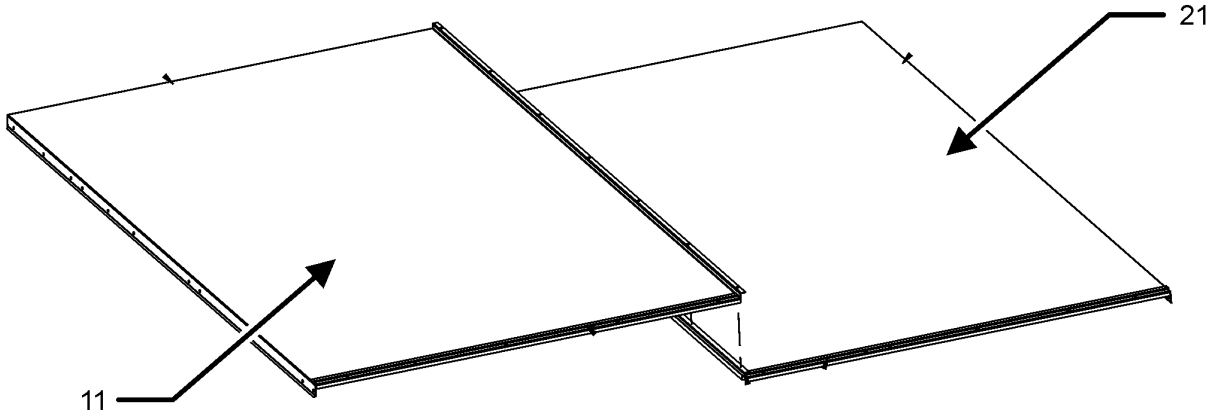

TOP PANEL ASSEMBLIES MAY DIFFER FROM WHAT IS SHOWN

Top Panel Assembly

Ref. No:	Part No:	Description:	Ref. No:	Part No:	Description:

Image 1:

11	0121L00693SB	TOP CONTROL SIDE PNT
21	0121L00694SB	TOP PANEL ASSY PNT
211	0121L04969SB	PAINTED TOP FAN FAN MOUNT
221	0121L04970SB	PAINTED, TOP PANEL, FAN MOUNT
241	0152G00000	FAN GRILLE, RAISED (QTY 5)
251	0161R00003P	CONDUIT (QTY 5)
261	0161R00048	MOLDED RING VENTURI 22 (QTY 5)
271	0150M00065	FAN BLADE, 22' (QTY 5)
281	0163M00006P	NUT ACORN 5/16 HEX BLACK (QTY 20)
291	0163M00005P	WASHER BLACK .50 OD .218ID (QTY 20)
321	M0272803	WASHER LOCK (QTY 20)
331	0131M00925	Nidec Motor, 1/2 HP (M1, M2, M3)
331	0131M00926	Nidec Motor, 1/2 HP (M4, M5, M6)
331	0131M00930	Nidec Motor, 1/2 HP (M7, M8, M9)

Expanded Model Nomenclature

M1 - DFG3003DH00001SAA
M2 - DFG3003DL00001SAA
M3 - DFG3003DM00001SAA
M4 - DFG3004DH00001SAA
M5 - DFG3004DL00001SAA
M6 - DFG3004DM00001SAA
M7 - DFG3007DH00001SAA
M8 - DFG3007DL00001SAA
M9 - DFG3007DM00001SAA

Tubing and Compressor Assembly

TUBING AND COMPRESSOR ASSEMBLY

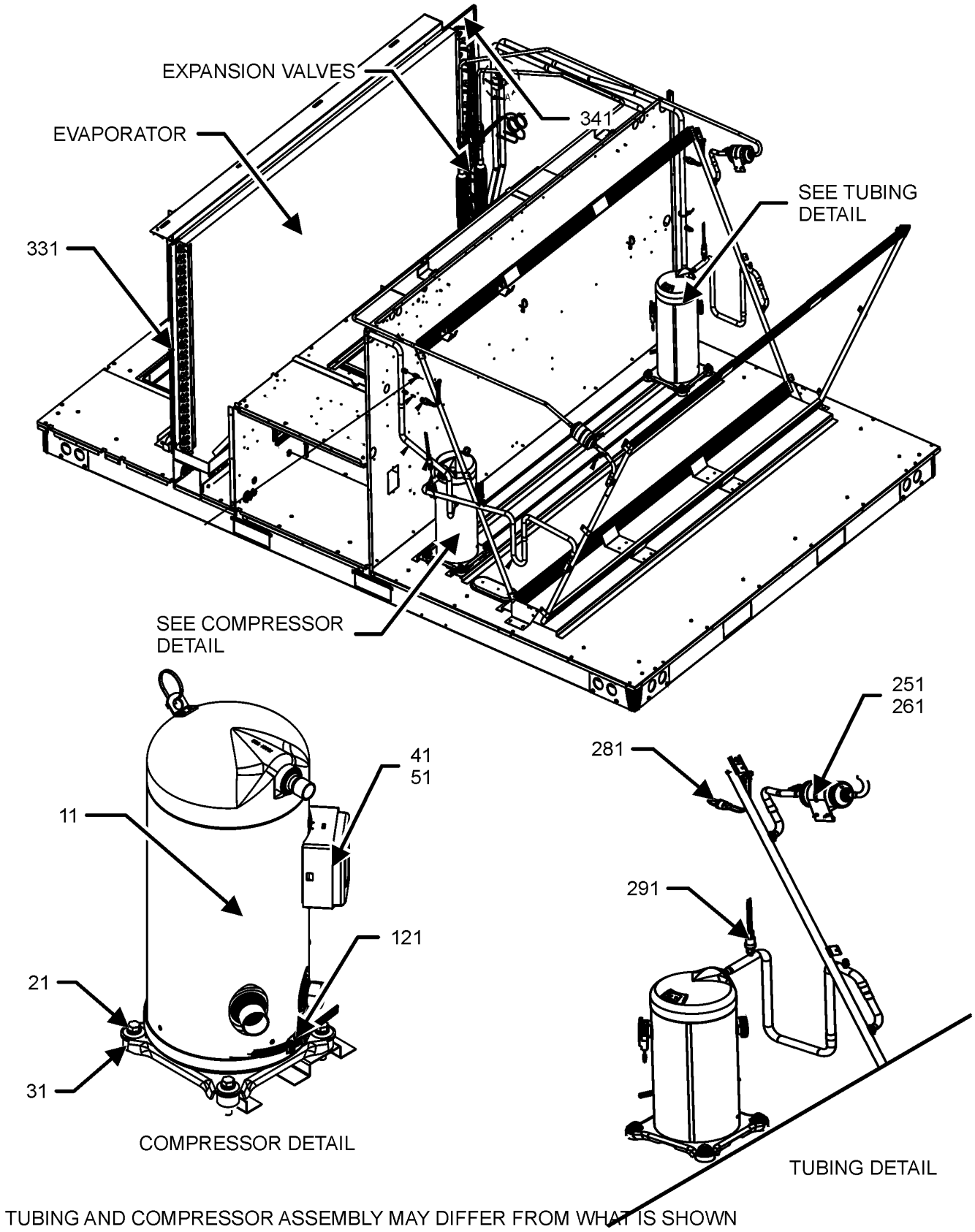

TUBING AND COMPRESSOR ASSEMBLY MAY DIFFER FROM WHAT IS SHOWN

Tubing and Compressor Assembly

Ref. No:	Part No:	Description:
Image 1:		
11	ZP137KCETFD155	Comp, 135,000, 460/60/3 (M4, M5, M6)
11	ZP137KCETFE155	Comp, 136,000, 575/60/3 (M7, M8, M9)
11	ZP137KCETF5250	COMP, 137,000, 200/230/60/3 (M1, M2, M3)
21	0164M00018	GROMMET COMPRESSOR (QTY 8)
31	B1393740	COMP BOLT SLEEVE (QTY 8)
41	0159L00147	HARNESS, SCROLL COMPRESSOR (M4, M5, M6, M7, M8, M9)
41	0159L00151	HARNESS, SCROLL COMPRESSOR (M1, M2, M3)
51	0159L00148	HARNESS, SCROLL COMPRESSOR (M4, M5, M6, M7, M8, M9)
51	0159L00152	HARNESS, SCROLL COMPRESSOR (M1, M2, M3)
121	0130L00276	CRANK CASE HEATER, 90W, 240V (M1, M2, M3)
121	0130L00277	CRANK CASE HEATER, 90W, 480V (M4, M5, M6)
121	0130L00278	CRANK CASE HEATER, 90W, 575V (M7, M8, M9)
251	0162M00469	FILTER DRIER
261	0162M00469	FILTER DRIER
281	0130M00732	SWITCH LOW PRESSURE (QTY 2)
291	0130M00738	SWITCH HIGH PRESSURE (QTY 2)
331	0121L04512	BLOCK OFF EVAPORATOR
341	0121L04866	BLOCK OFF EVAPORATOR (QTY 2)
NS	B1373315	ACCESS FITTING (QTY 4)
NS	0141L00029	BOARD FORK (QTY 2)
NS	0121L00724	BRACKET FORK BOARD (QTY 4)
NS	0151M00104	VALVE CORE (QTY 6)

Expanded Model Nomenclature

M1 - DFG3003DH00001SAA
M2 - DFG3003DL00001SAA
M3 - DFG3003DM00001SAA
M4 - DFG3004DH00001SAA
M5 - DFG3004DL00001SAA
M6 - DFG3004DM00001SAA
M7 - DFG3007DH00001SAA
M8 - DFG3007DL00001SAA
M9 - DFG3007DM00001SAA

Partition, Evaportor, Condenser Assembly

PARTITION, EVAPORATOR, CONDENSER ASSEMBLY

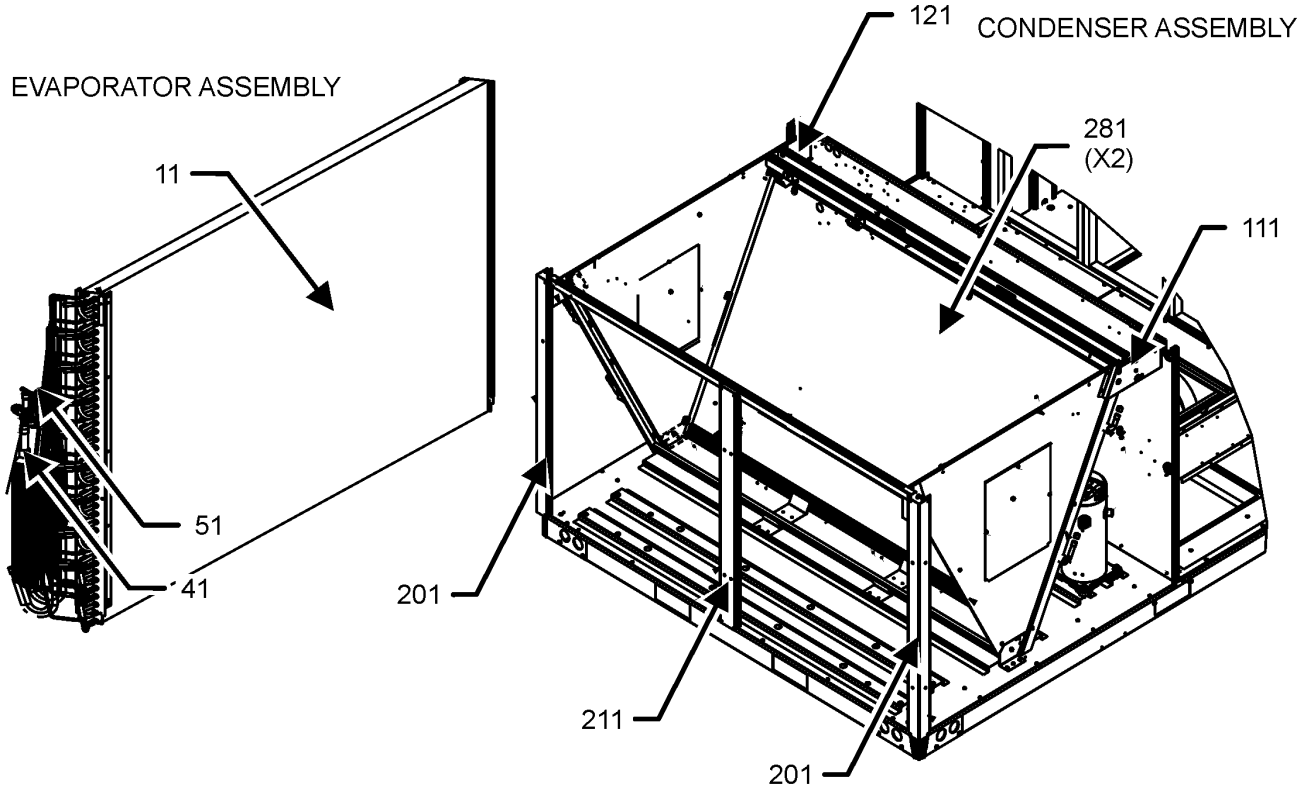

PARTITION ASSEMBLY

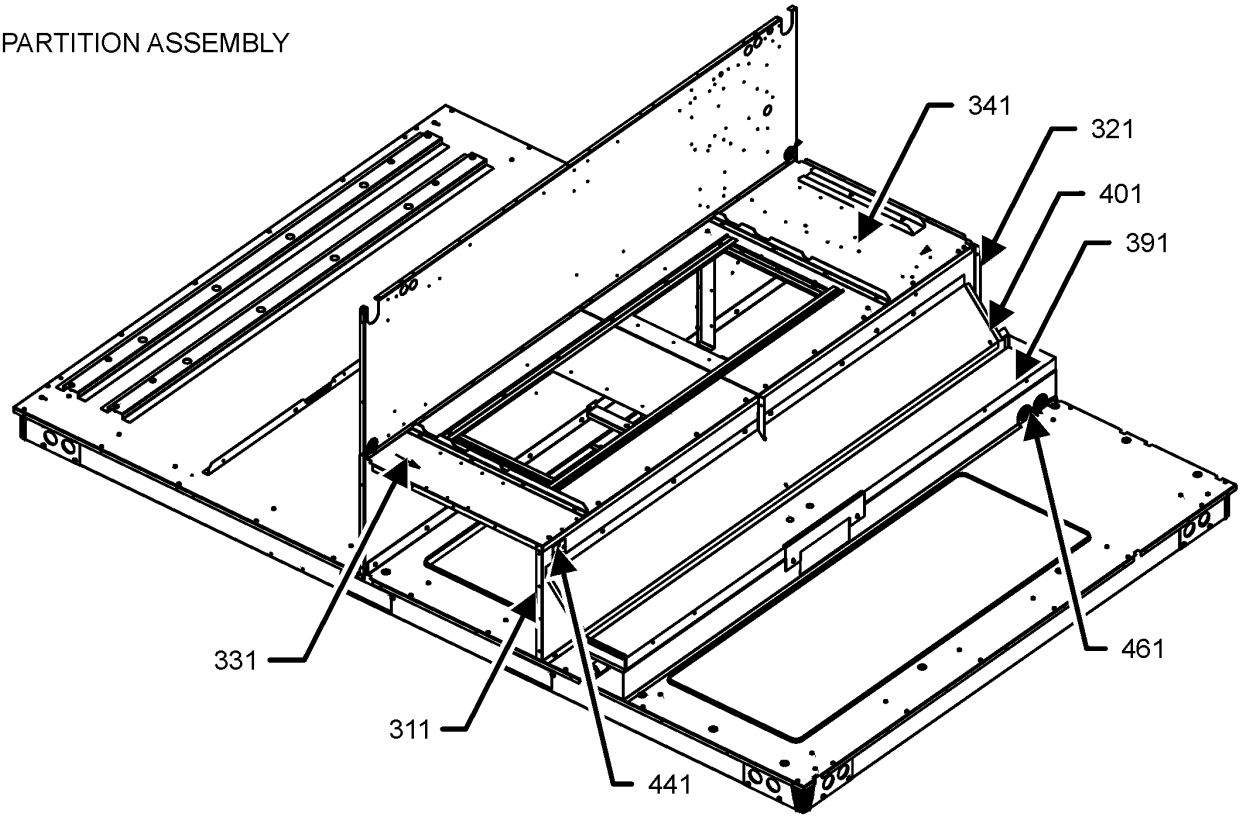

PARTITION, EVAPORATOR, CONDENSER ASSEMBLY MAY DIFFER FROM WHAT IS SHOWN

Partition, Evaportor, Condenser Assembly

Ref. No:	Part No:	Description:	Ref. No:	Part No:	Description:

Image 1:

11	0202L00610	ASSY., EVAPORATOR COIL
41	0251L00136	ASSY., EXPANSION VALVE C1
51	0251L00144	ASSY., EXPANSION VALVE C2
111	0121L04529	BRACKET - CONDENSOR END
121	0121L04635	BRACKET - CONDENSOR END
201	0121L04608SB	PAINTED CORNER POST (QTY 2)
211	0121L01144SB	POST COND PANEL PNT (QTY 2)
281	0201L00845	COND COIL, MICROCHNL 25MM (QTY 2)
311	0121L04782	DECK SIDE DUCT END
321	0121L04944	DECK SIDE HEAT END
331	0121L04859	DECK CLOWER EVAP SIE
341	0121L05044	DECK CONTROL BOX END
391	0270L02431DG	PAINTED DRAIN PAN WELDMENT
401	0121L04929	SHIELD BLOWOFF
441	0121L00321	COVER SMOKE DETECTOR
461	0164G00004	GROMMET HORSESHOE 1.75 (QTY 2)
NS	0160L00136	AIR FILTER (QTY 8)
NS	0121L00552	ANGLE-HEAT EXCHANGER, LH SIDE
NS	0121L00553	ANGLE-HEAT EXCHANGER, LOWER (QTY 2)
NS	0121L00551	ANGLE-HEAT EXCHANGER, RH SIDE
NS	0163L00045	FITTING DRAIN EXIT

Expanded Model Nomenclature

M1 - DFG3003DH00001SAA
M2 - DFG3003DL00001SAA
M3 - DFG3003DM00001SAA
M4 - DFG3004DH00001SAA
M5 - DFG3004DL00001SAA
M6 - DFG3004DM00001SAA
M7 - DFG3007DH00001SAA
M8 - DFG3007DL00001SAA
M9 - DFG3007DM00001SAA

Blower Assembly

BLOWER ASSEMBLY

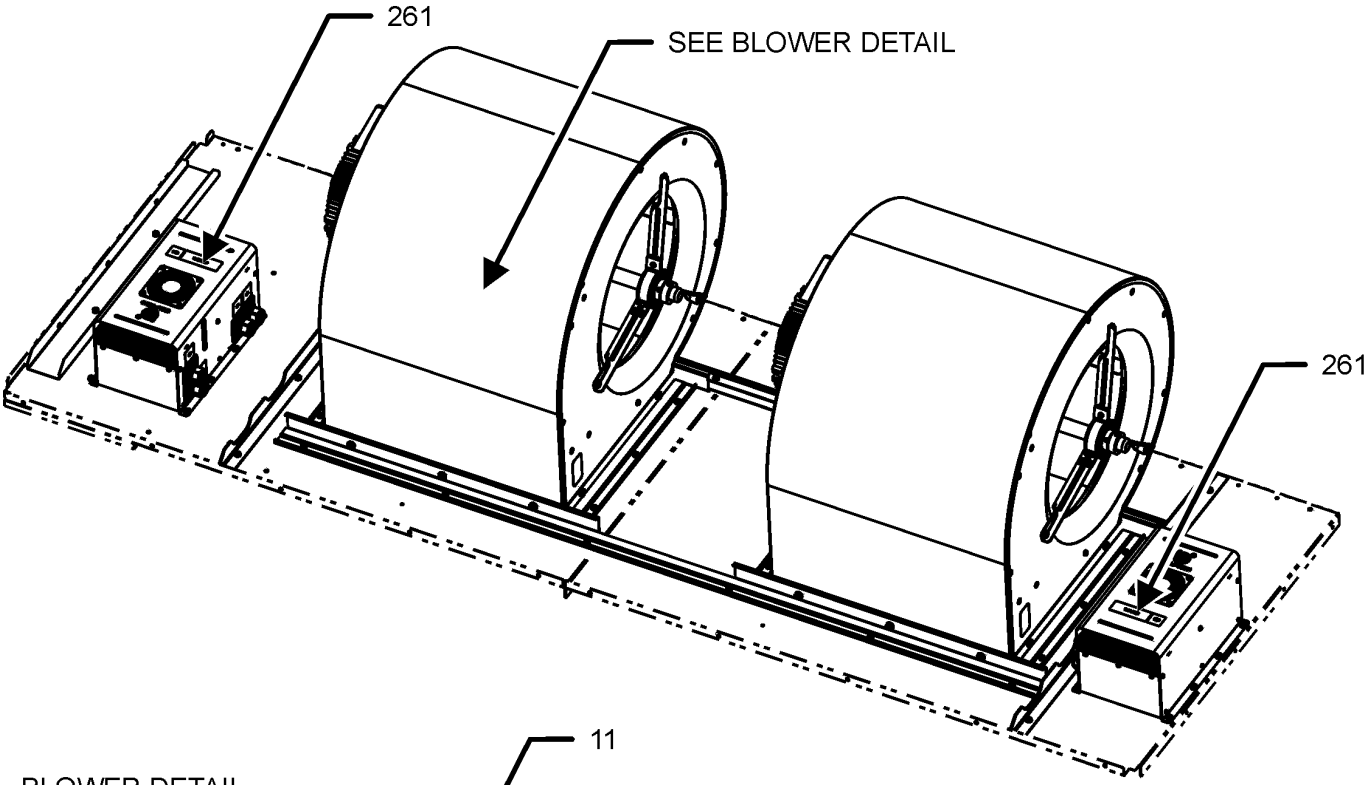

BLOWER DETAIL

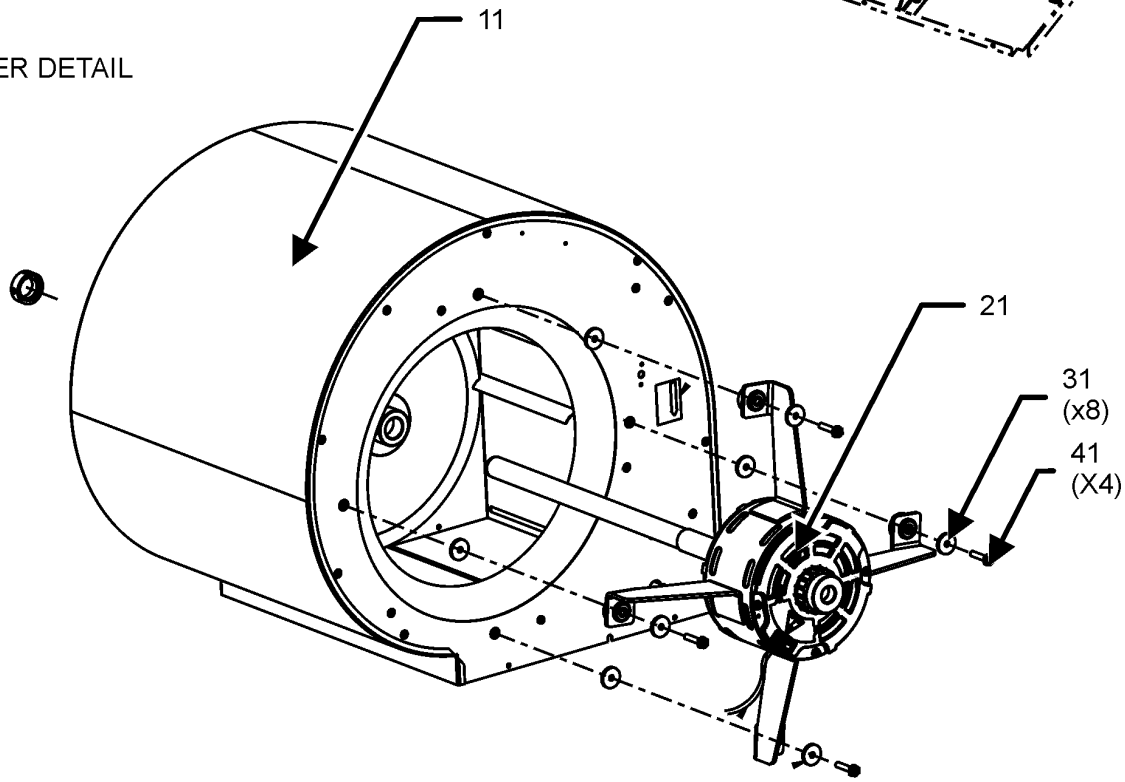

BLOWER ASSEMBLY MAY DIFFER FROM WHAT IS SHOWN

Blower Assembly

Ref. No:	Part No:	Description:	Ref. No:	Part No:	Description:
Image 1:					
11	0271L00341	ASSY BLOWER (QTY 4)			
21	0131L00214	MOTOR 5.0 HP (M1, M2, M3)			
21	0131L00215	MOTOR 5.0 HP (M4, M5, M6)			
21	0131L00216	MOTOR 5.0 HP (M7, M8, M9)			
31	B1392918	WASHER FLAT 1/4 IDX1OD (QTY 32)			
41	M0250565	SCREW TC 1.25 (QTY 16)			
261	0131L00375	PROGRAM MOTOR CONTROLLER (M1, M4, M7)			
261	0131L00376	PROGRAM MOTOR CONTROLLER (M3, M6, M9)			
261	0131L00377	PROGRAM MOTOR CONTROLLER (M2, M5, M8)			
NS	20269903	LIMIT (QTY 2)			

Expanded Model Nomenclature

M1 - DFG3003DH00001SAA
M2 - DFG3003DL00001SAA
M3 - DFG3003DM00001SAA
M4 - DFG3004DH00001SAA
M5 - DFG3004DL00001SAA
M6 - DFG3004DM00001SAA
M7 - DFG3007DH00001SAA
M8 - DFG3007DL00001SAA
M9 - DFG3007DM00001SAA

Control Box Assembly

CONTROL BOX ASSEMBLY

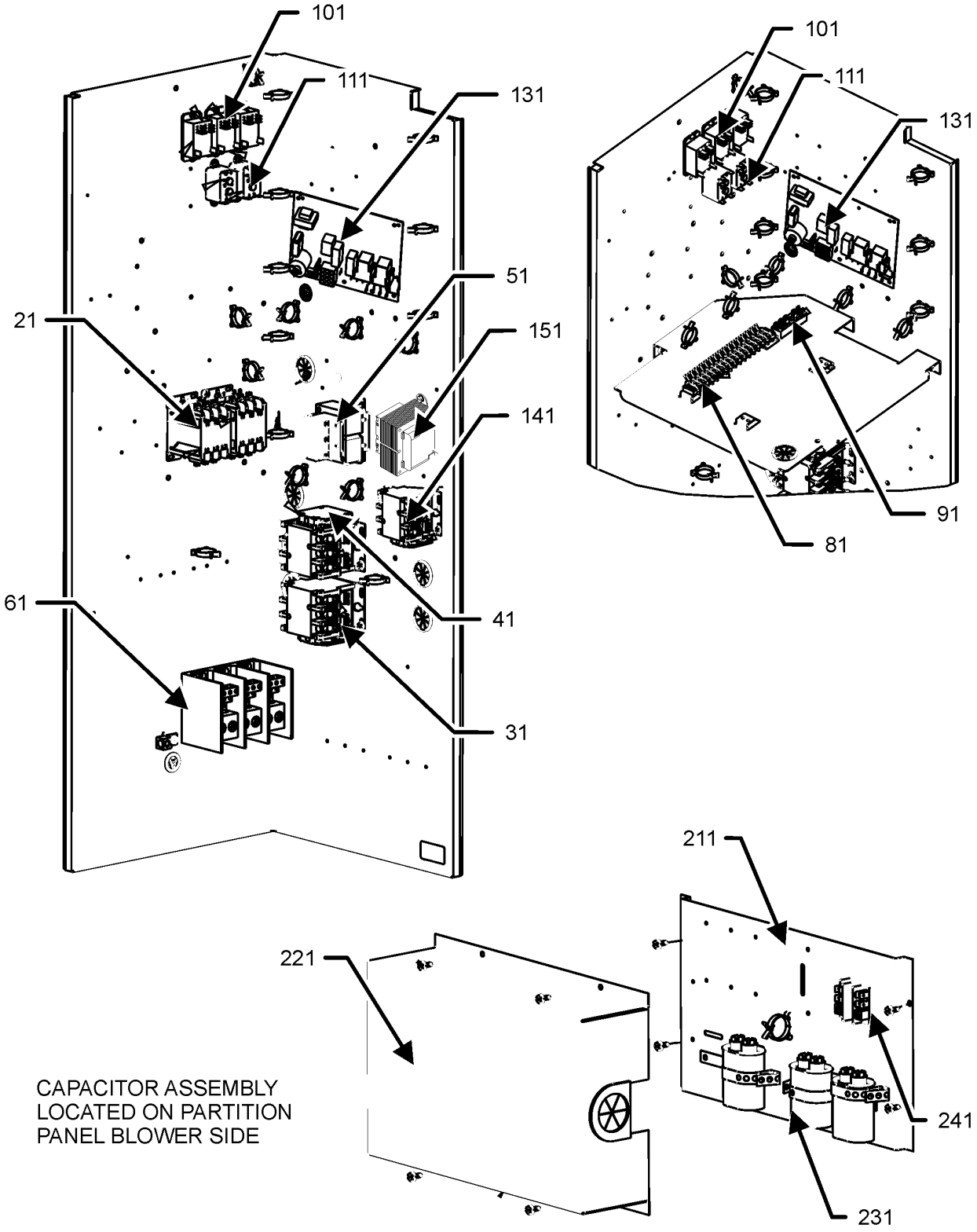

CAPACITOR ASSEMBLY
LOCATED ON PARTITION
PANEL BLOWER SIDE

CONTROL BOX ASSEMBLY MAY DIFFER FROM WHAT IS SHOWN

Control Box Assembly

Ref. No:	Part No:	Description:	Ref. No:	Part No:	Description:
Image 1:					
21	CONT3P030024V	CONT 3 POLE 30 AMP 24 VAC (QTY 2)			
31	CONT3P030024V	CONT 3 POLE 30 AMP 24 VAC (M4, M5, M6, M7, M8, M9)			
31	CONT3P060024V	CONT, 3 POLE, 60 AMP, 24VAC (M1, M2, M3)			
41	0130M00249	AUXILLARY SWITCH (QTY 2)			
51	0130L00205	TRANSFORMER (M1, M2, M3)			
51	0130L00206	TRANSFORMER (M4, M5, M6)			
51	0130L00207	TRANSFORMER (M7, M8, M9)			
61	0130L00217	POWER BLOCK			
81	0130M00038	TERMINAL BOARD			
91	802007090	TERM BOARD			
101	0130M00178	DPDT RELAY 24VAC (QTY 3)			
111	10135604	RELAY (QTY 2)			
131	PCBAG123	PCB, IGNITION, DSI, INTEG			
141	CONT2P025024V	CONT 2 POLE 25 AMP 24 VAC (QTY 3)			
151	0130M00596	TRANSFORMER (M4, M5, M6)			
151	0130M00597	TRANSFORMER (M7, M8, M9)			
211	0121L04684	PLATE CAPACITOR			
221	0121L04621	COVER CAPACITOR			
231	CAP100000370LA	CAP, 10 MFD/370V/OVAL (QTY 5)			
241	B1368250	TERMINAL BLOCK A-10KW			
NS	0164G00005	GROMMET HORSESHOE 1.675			
NS	20520901	STRAP-CAPACITOR (QTY 5)			
NS	B1392104	UNIVERSAL BUSHING UN 875 (QTY 3)			

Expanded Model Nomenclature

M1 - DFG3003DH00001SAA
M2 - DFG3003DL00001SAA
M3 - DFG3003DM00001SAA
M4 - DFG3004DH00001SAA
M5 - DFG3004DL00001SAA
M6 - DFG3004DM00001SAA
M7 - DFG3007DH00001SAA
M8 - DFG3007DL00001SAA
M9 - DFG3007DM00001SAA

Heat Exchange

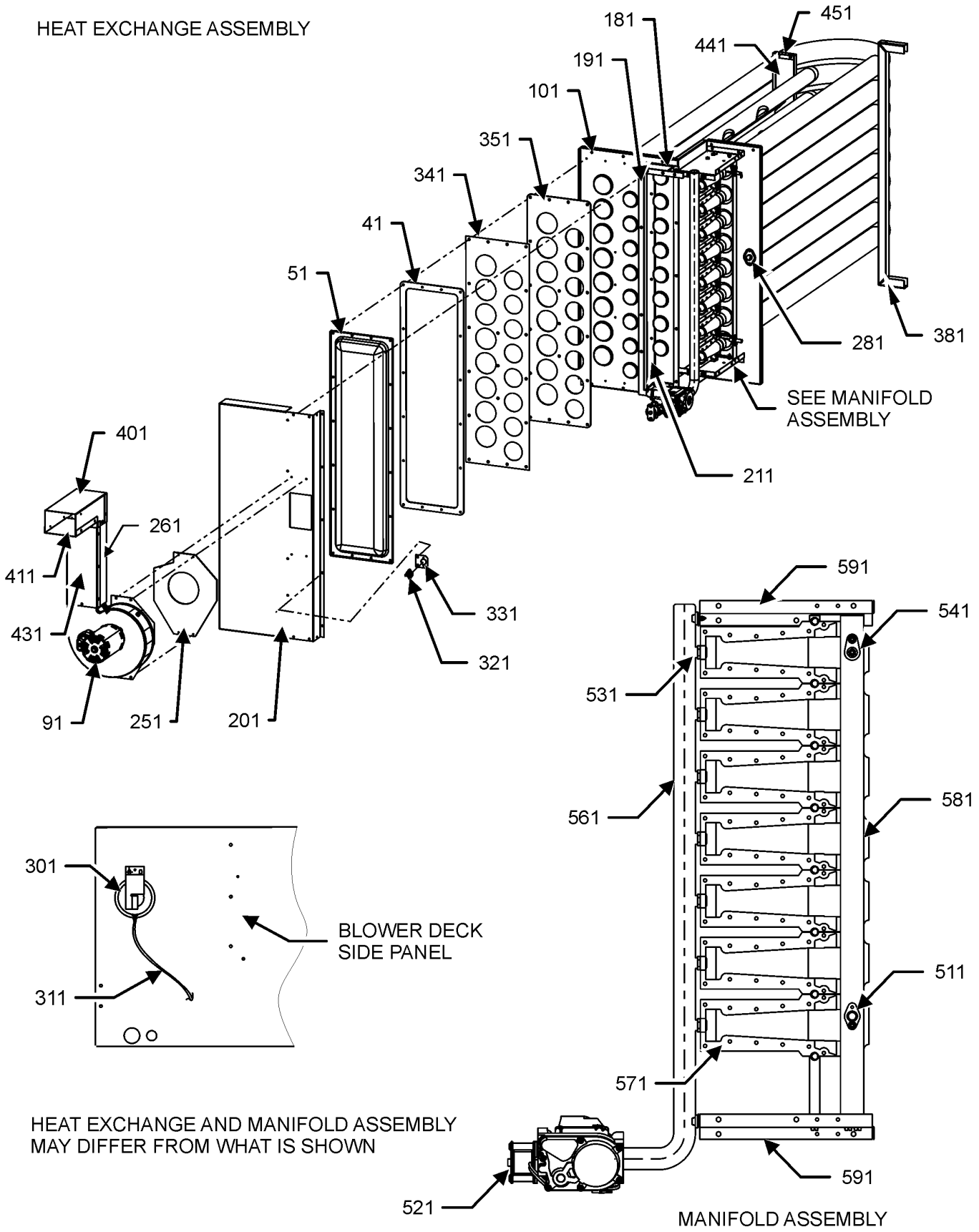

Heat Exchange

Ref. No:	Part No:	Description:
Image 1:		
41	0154L00025	GASKET-COVER REAR 8
51	0121L00545	COVER-REAR 8 TUBE
91	0131L00014	MOTOR-ID VENT
101	0270L02384	ASSY., PARTITION TUBE 6B (M2, M5, M8)
101	0270L00186	ASSY., PARTITION TUBE 8B (M1, M3, M4, M6, M7, M9)
181	0154L00026	INNER COLLECTOR BOX GASKET
191	0154L00027	OUTER COLLECTOR BOX GASKET
201	0121L05122	COVER-COLLECTOR BOX 8 (M1, M4, M7)
201	0121L05124	COVER-COLLECTOR BOX 8 (M2, M5, M8)
201	0121L05125	COVER-COLLECTOR BOX 8 (M3, M6, M9)
211	0121L00546	CHANNEL-COLLECTOR BOX 8
251	0154L00029	ID BLOWER GASKET
261	0121L04774	FLUE, WRAPPER
281	0130M00063	LIMIT, PRIMARY, 140, GOLD
301	11112501	PRESSURE SWITCH
311	A3468601	SILICONE TUBING 3/16 IDX 1/4
321	10123532	LIMIT-RESET MAN-GRAY (M2, M3, M5, M6, M8, M9)
321	10123529	LIMIT-RESET MAN-GREEN (M1, M4, M7)
331	0121L04785	BRACKET, FLAME ROLLOUT (M2, M3, M5, M6, M8, M9)
331	0121L00053	BRACKET-FLAME ROLLOUT (M1, M4, M7)
341	0121L00548	PLATE-TUBE PANEL 8
351	0154L00028	GASKET-TUBE PANEL 8
381	0121L00930	SUPPORT-HEAT TUBES 2.25
401	0121L02100	FLUE WRAPPER EXIT
411	0121L00671	FLUE COVER EXIT
431	0121L04775	FLUE, COVER
441	0121L00808	SUPPORT-HEAT TUBES 2.25
451	0121L00823	BRACKET-TUBE SUPPORT (QTY 2)
511	0130L00251	IGNITOR
521	0151M00015	VALVE, GAS (HW) VR83
531	0163L00014	ORIFICE (M1, M3, M4, M6, M7, M9)
531	0163L00015	ORIFICE (M2, M5, M8)
541	0130F00010	FLAME SENSOR
561	0163L00286	MANIFOLD-6 BURNER (M2, M5, M8)
561	0163L00033	MANIFOLD-GAS 8 BURNER (M1, M3, M4, M6, M7, M9)
571	0163L00000	BECKETT BURNER (QTY 8)
581	0121L02691	BRACKET, BURNER, 6 (M2, M5, M8)
581	0121L00635	BRACKET-8 BURNERS (M1, M3, M4, M6, M7, M9)
591	0121G00268	BRACKET-BURNER TOP/BOT (QTY 2)
NS	B1910013	1 1/8 GROMMET
NS	0121L00697	BRACKET GAS VALVE PIPE
NS	0163L00040	FLUE SCREEN

Expanded Model Nomenclature

M1 - DFG3003DH00001SAA
M2 - DFG3003DL00001SAA
M3 - DFG3003DM00001SAA
M4 - DFG3004DH00001SAA
M5 - DFG3004DL00001SAA
M6 - DFG3004DM00001SAA
M7 - DFG3007DH00001SAA
M8 - DFG3007DL00001SAA
M9 - DFG3007DM00001SAA

ACCESSORY PARTS LIST

NOTE: NOT ALL OPTIONS AVAILABLE FOR ALL PRODUCTS

FOR ACCESSORY PARTS SEE THE FOLLOWING PART MANUAL

RP-FIOPL*
RP-EH[X,S]*L*

Accessory parts

Ref. No:	Part No:	Description:	Ref. No:	Part No:	Description:
Image 1:					
NS	RP-EH[S,X]*L*	ACCESSORY RP MANUAL			
NS	RP-FIOPL*	ACCESSORY RP MANUAL			

Expanded Model Nomenclature

M1 - DFG3003DH00001SAA
M2 - DFG3003DL00001SAA
M3 - DFG3003DM00001SAA
M4 - DFG3004DH00001SAA
M5 - DFG3004DL00001SAA
M6 - DFG3004DM00001SAA
M7 - DFG3007DH00001SAA
M8 - DFG3007DL00001SAA
M9 - DFG3007DM00001SAA