REPAIR PARTS

AD9T96 EEM Counter Flow Furnace

AD9T960403BNAA
AD9T960603BNAA
AD9T960803BNAA
AD9T961005CNAA

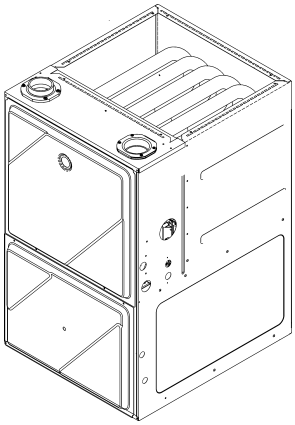

Amana® is a registered trademark of Maytag Corporation or its related companies and is used under license. All rights reserved.

This manual is to be used by qualified technicians only.

© 2024 Goodman Company, L.P. ◊ 19001 Kermier Rd. ◊ Waller, TX 77484

Index

Functional Parts List 3

Illustration and Parts ..... 4 - 11

Views shown are for parts illustrations only, not servicing procedures.

Text Codes:

AR - As Required
NA - Not Available
NS - Not Shown
00000000 - See Note
QTY - Quantity Example (QTY 3) (If Quantity not shown, Quantity = 1)
M - Model Example (M1) (If M Code not shown, then part is used on all Models)

Expanded Model Nomenclature:

Example
M1 - Model#1
M2 - Model#2
M3 - Model#3

Goodman Company, L.P. is not responsible for personal injury or property damage resulting from improper service. Review all service information before beginning repairs.

Warranty service must be performed by an authorized technician, using authorized factory parts. If service is required after the warranty expires, Goodman Company, L.P. also recommends contacting an authorized technician and using authorized factory parts.

Goodman Company, L.P. reserves the right to discontinue, or change at any time, specifications or designs without notice or without incurring obligations.

For assistance within the U.S.A. contact:
Homeowner Support
Goodman Company, L.P.
19001 Kermier Road
Waller, Texas 77484
877-254-4729-Telephone
713-863-2382-Facsimile

For assistance outside the U.S.A. contact:
International Division
Goodman Company, L.P.
19001 Kermier Road
Waller, Texas 77484
713-861-2500-Telephone
713-863-2382-Facsimile

Functional Parts

Part No:	Description:
0130F00038	AUX LIMIT - LT BLUE 120º (QTY 2)
0163F00017	BECKETT BURNER (QTY 2)
0130F00010	FLAME SENSOR
0151M00027	GAS VALVE
0257F20080	HEAT EXCHANGER ASSY (M4)
0257F20079	HEAT EXCHANGER ASSY (M3)
0257F20078	HEAT EXCHANGER ASSY (M2)
0257F20077	HEAT EXCHANGER ASSY (M1)
0130F00008	IGNITOR-SINI 17 SEC
20162904	LIMIT, PRIMARY (M3)
20162906	LIMIT, PRIMARY (M1, M2, M4)
0130F00123	LIMIT, RESET MAN (M4)
10123538	LIMIT-MAN-LIGHT GREEN (M2)
10123533	LIMIT-RESET MAN-YELLOW (M1, M3)
0271F00507	MORRISON 11 X 10 BLOWER (M4)
0271F00506	MORRISON 11 X 8 BLOWER (M2, M3)
0131F00334M	MOTOR 1 HP W/O CONTROLLER (M4)
0131F00332M	MOTOR 1/2 HP W/O CONTROLLER (M1, M2, M3)
0131F00229	MOTOR PROGRAM (M2)
0131F00228	MOTOR PROGRAM (M1)
0131F00231	MOTOR PROGRAM (M4)
0131F00230	MOTOR PROGRAM (M3)
0171M00002	MOTOR-ID, BLOWER
PCBBF302V010	PCB, CIRCUIT BOARD
0130F00429	PRESSURE SWITCH
0130F00435	SWITCH, PRESSURE (M1, M2)
0130F00436	SWITCH, PRESSURE (M3)
0130F00434	SWITCH, PRESSURE (M4)
10690402	SWITCH-INTERLOCK
0130M00140	TRANSFORMER 120V TO 24V, 40VA

SPECIAL PARTS

0161M00032	NAMEPLATE, AMANA

Expanded Model Nomenclature

M1 - AD9T960403BNAA
M2 - AD9T960603BNAA
M3 - AD9T960803BNAA
M4 - AD9T961005CNAA

Cabinet Assembly

CABINET ASSEMBLY

601
111
191
451
511
281
311
741
501
521
601
491
281
201
121
341
351
141

CABINET ASSEMBLY MAY DIFFER FROM WHAT IS SHOWN

DRAIN TRAP ASSEMBLY

DRAIN KIT ASSEMBLY

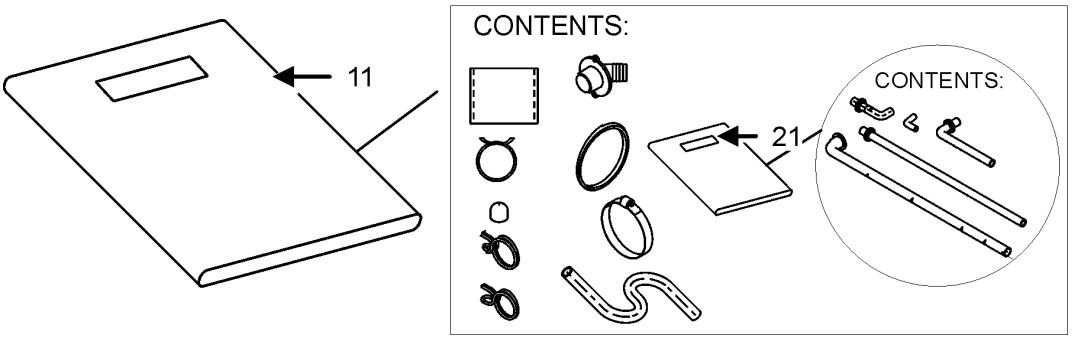

Cabinet Assembly

Ref. No:	Part No:	Description:	Ref. No:	Part No:	Description:
Image 1:					
11	0270F05403	DRAIN KIT ASSY			
21	0270F05403	DRAIN KIT ASSY			
111	0154F00024	GASKET (QTY 2)			
121	0154F00025	GASKET (QTY 2)			
141	0161F00046	DRAIN TRAP			
191	0121F00338LG	DOOR ACCESS 21" PNT (M4)			
191	0121F00337LG	DOOR, ACCESS 17.5" PNT (M1, M2, M3)			
201	0121F00340LG	DOOR, BLOWER 17.5" PNT (M1, M2, M3)			
201	0121F00341LG	DOOR, BLOWER 21" PNT (M4)			
281	B1392139	VIEW PORT BUSHING-BLOWER DOOR (QTY 2)			
311	0154F00020	GASKET, DECK (M1, M2, M3)			
311	0154F00021	GASKET, DECK (M4)			
341	0270F03125	CF DRAIN TUBE ASSY (M1, M2, M3)			
341	0270F03515	CF DRAIN TUBE ASSY (M4)			
351	0270F03126	CF DRAIN TUBE ASSY (M4)			
351	0270F03514	CF DRAIN TUBE ASSY (M1, M2, M3)			
451	M0501301	PIPE GROMMET			
491	M0570808	BUTTON PLUG			
501	M0570806	BUTTON PLUG			
511	M0570807	BUTTON PLUG			
521	0161M00027	PLUG, HOLE			
601	B1392021	PLASTIC PLUG, 1" (2713-BLK) (QTY 4)			
741	B1392104	UNIVERSAL BUSHING UB 875			
NS	M0310345	BUTTON PLUG (QTY 2)			
NS	20179309	GASKET (M1, M2, M3)			
NS	20179310	GASKET (M4)			
NS	0163M00319	HEX NUT-INSERT (QTY 3)			
NS	0161M00032	NAMEPLATE, AMANA			
NS	M0273904	RETAINER-SCREW (QTY 3)			
NS	M0209730	SCREW-DECORATIVE (QTY 3)			

Expanded Model Nomenclature

M1 - AD9T960403BNAA
M2 - AD9T960603BNAA
M3 - AD9T960803BNAA
M4 - AD9T961005CNAA

Blower Assembly

BLOWER ASSEMBLY

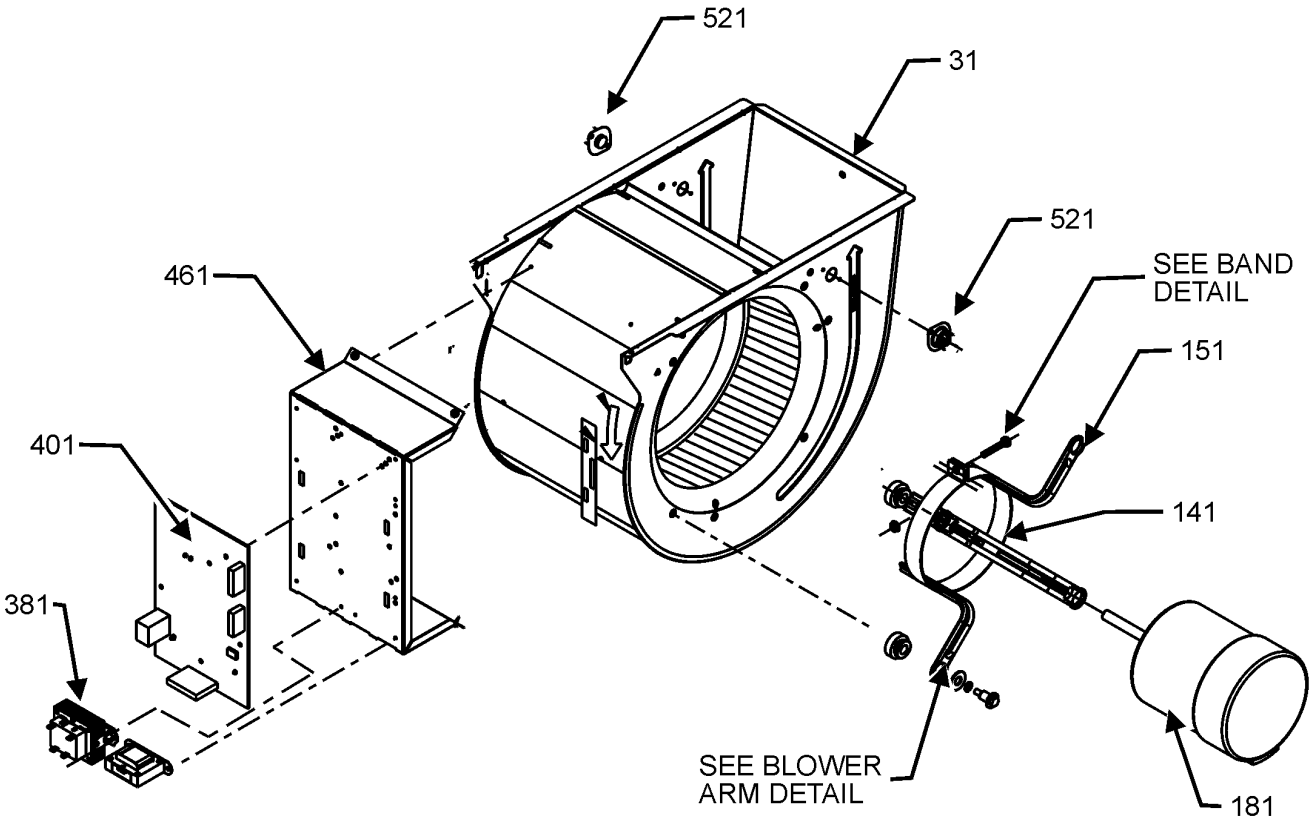

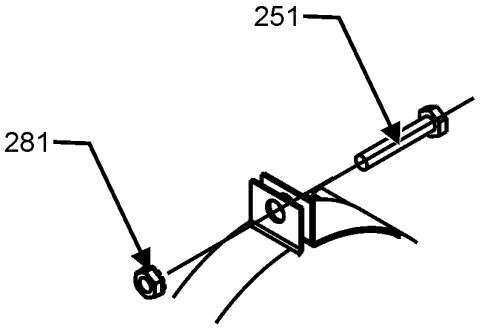

BAND DETAIL

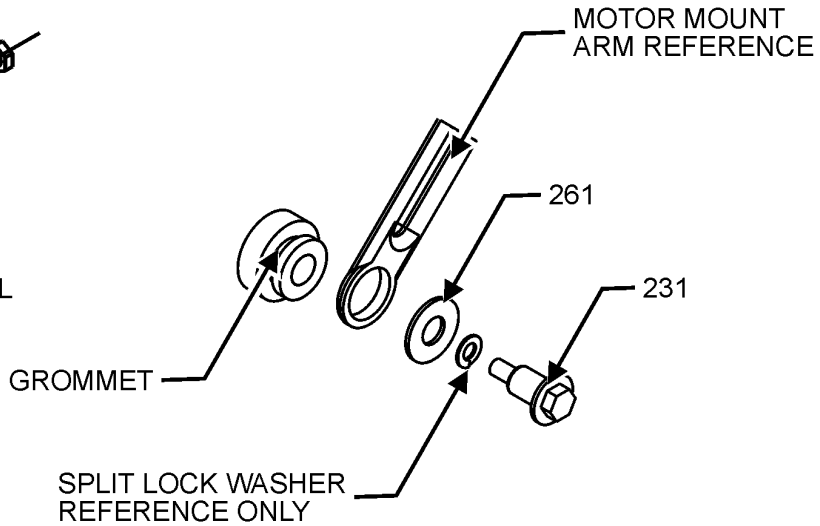

BLOWER ARM DETAIL

BLOWER ASSEMBLY MAY DIFFER FROM WHAT IS SHOWN

Blower Assembly

Ref. No:	Part No:	Description:	Ref. No:	Part No:	Description:
Image 1:					
31	0271F00507	MORRISON 11 X 10 BLOWER (M4)			
31	0271F00506	MORRISON 11 X 8 BLOWER (M2, M3)			
141	0121M00039	MOUNT BAND, MOTOR (HEAVY DUTY)			
151	0163M00538	MOUNT ARM, MOTOR (QTY 3)			
181	0131F00334M	MOTOR 1 HP W/O CONTROLLER (M4)			
181	0131F00332M	MOTOR 1/2 HP W/O CONTROLLER (M1, M2, M3)			
181	0131F00228	MOTOR PROGRAM (M1)			
181	0131F00229	MOTOR PROGRAM (M2)			
181	0131F00230	MOTOR PROGRAM (M3)			
181	0131F00231	MOTOR PROGRAM (M4)			
231	M0250565	TC SCREW 1.25" (QTY 3)			
251	0163M00320	HEX HEAD ALL THREAD TAP BOLT			
261	B1392918	WASHER, FLAT 1/4 ID X 1 OD (QTY 3)			
281	B1393800	LOCKNUT, NYLON, INSERT 1/4, 20			
381	0130M00140	TRANSFORMER 120V TO 24V, 40VA			
401	PCBBF302V010	PCB, CIRCUIT BOARD			
461	0121F00802	MOUNTING PANEL, CONTROLS			
521	0130F00038	AUX LIMIT - LT BLUE 120º (QTY 2)			
NS	0159F00160	CTM, MOTOR HARNESS			
NS	M0282015	KEPS NUT (M4)			
NS	B1392021	PLASTIC PLUG, 1" (2713-BLK) (QTY 4)			
NS	0163M00279	SCREW #6 X .375 SELF DRILL (M4)			
NS	B1392820	WASHER, SPLIT LOCK 1/4 BZ (M4)			
NS	0259F00024	WIRE HARNESS-BLOWER			

Expanded Model Nomenclature

M1 - AD9T960403BNAA
M2 - AD9T960603BNAA
M3 - AD9T960803BNAA
M4 - AD9T961005CNAA

To replace the Shaft end of motor order:

0131F00332M	MOTOR 1/2 HP W/O CONTROLLER
0131F00333M	MOTOR 3/4 HP W/O CONTROLLER
0131F00334M	MOTOR 1 HP W/O CONTROLLER

Chassis Assembly

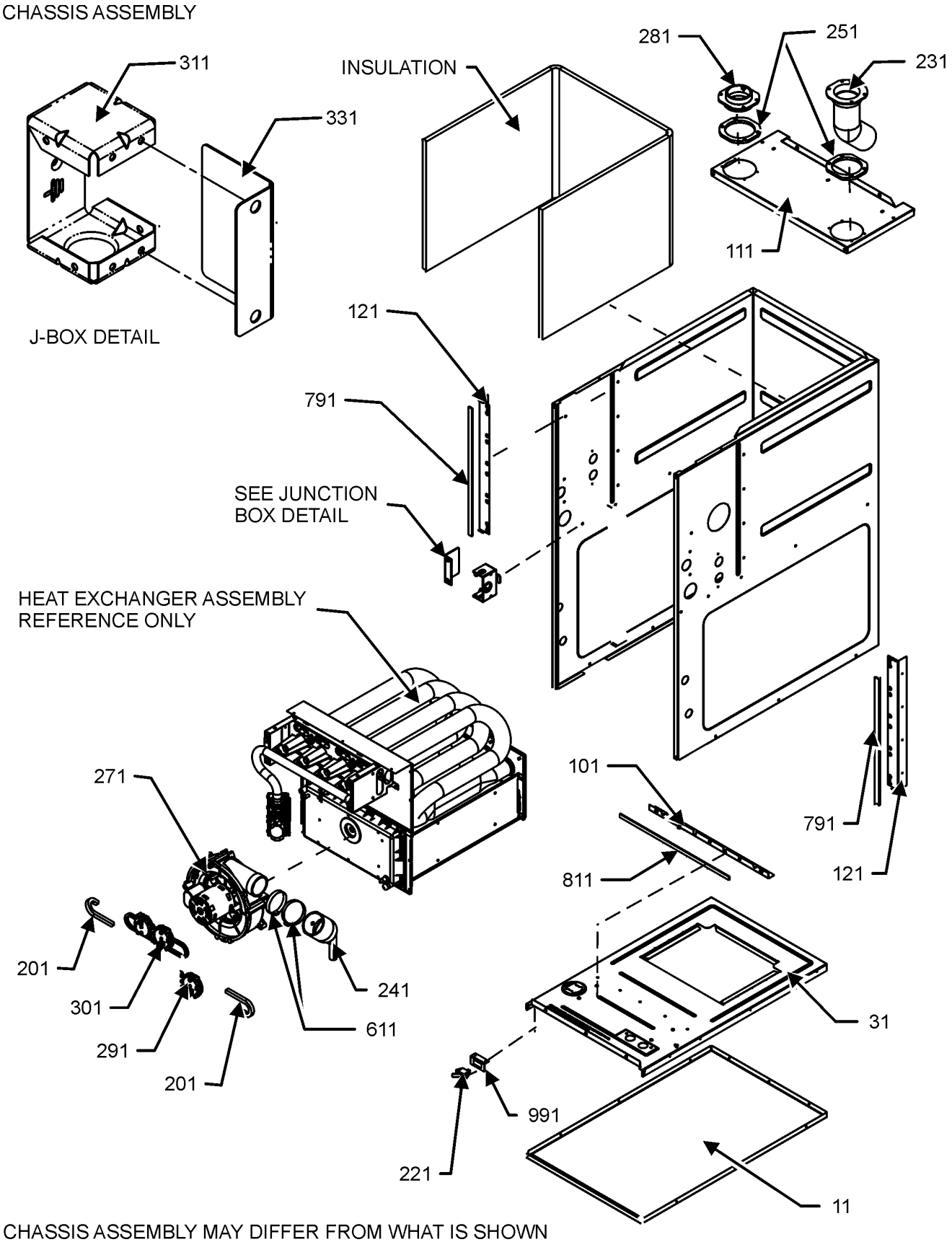

CHASSIS ASSEMBLY MAY DIFFER FROM WHAT IS SHOWN

Chassis Assembly

Ref. No:	Part No:	Description:	Ref. No:	Part No:	Description:
Image 1:					
11	0121F00548DG	PAINTED BASEPAN, 17.5 CF (M1, M2, M3)			
11	0121F00549DG	PAINTED BASEPAN, 21 CF (M4)			
31	0121F00536	DECK-BLOWER 17.5" CF (M1, M2, M3)			
31	0121F00537	DECK-BLOWER 21" CF (M4)			
101	0121F00314	ANGLE, DECK (M1, M2, M3)			
101	0121F00315	ANGLE, DECK (M4)			
111	0121F00426DG	TOP, PAINTED FURNACE 17.5" CF (M1, M2, M3)			
111	0121F00434DG	TOP, PAINTED FURNACE 21" CF (M4)			
121	0121F00313	ANGLE, SIDE (QTY 2)			
201	0164M00115	HOSE- PRESSURE SW 6"			
221	10690402	SWITCH-INTERLOCK			
231	0161F00064	PIPE, STRAIGHT CF (QTY 2)			
241	0164F00026	ELBOW-FLUE, 17.5" CFLOW (M1, M2, M3)			
241	0164F00027	ELBOW-FLUE, 21" CFLOW (M4)			
251	0154F00041	FRESH AIR GASKET			
271	0171M00002	MOTOR-ID, BLOWER			
281	0161F00037	COUPLING			
291	0130F00429	PRESSURE SWITCH			
301	0130F00434	SWITCH, PRESSURE (M4)			
301	0130F00435	SWITCH, PRESSURE (M1, M2)			
301	0130F00436	SWITCH, PRESSURE (M3)			
311	0121F20060	BOX, JUNCTION 90%			
331	0121F20061	BOX, JUNCTION 80%			
611	0163M00460	CLAMP-HOSE (QTY 2)			
791	0154F00015	GASKET (QTY 2)			
811	0154F00014	GASKET (M1, M2, M3)			
811	0154F00016	GASKET (M4)			
991	0121F00389	BRACKET, DOOR SWITCH			
NS	0160F00015	INSULATION, HT EXCHANGER 17.5" (M1, M2, M3)			
NS	0160F00016	INSULATION, HT EXCHANGER 21" (M4)			
NS	M0326804	PLUG-TUBE			
NS	0159F20018	WIRE HARNESS (M2, M3, M4)			
NS	0159F20021	WIRE HARNESS (M1)			

Expanded Model Nomenclature

M1 - AD9T960403BNAA
M2 - AD9T960603BNAA
M3 - AD9T960803BNAA
M4 - AD9T961005CNAA

Heat Exchange and Manifold Assembly

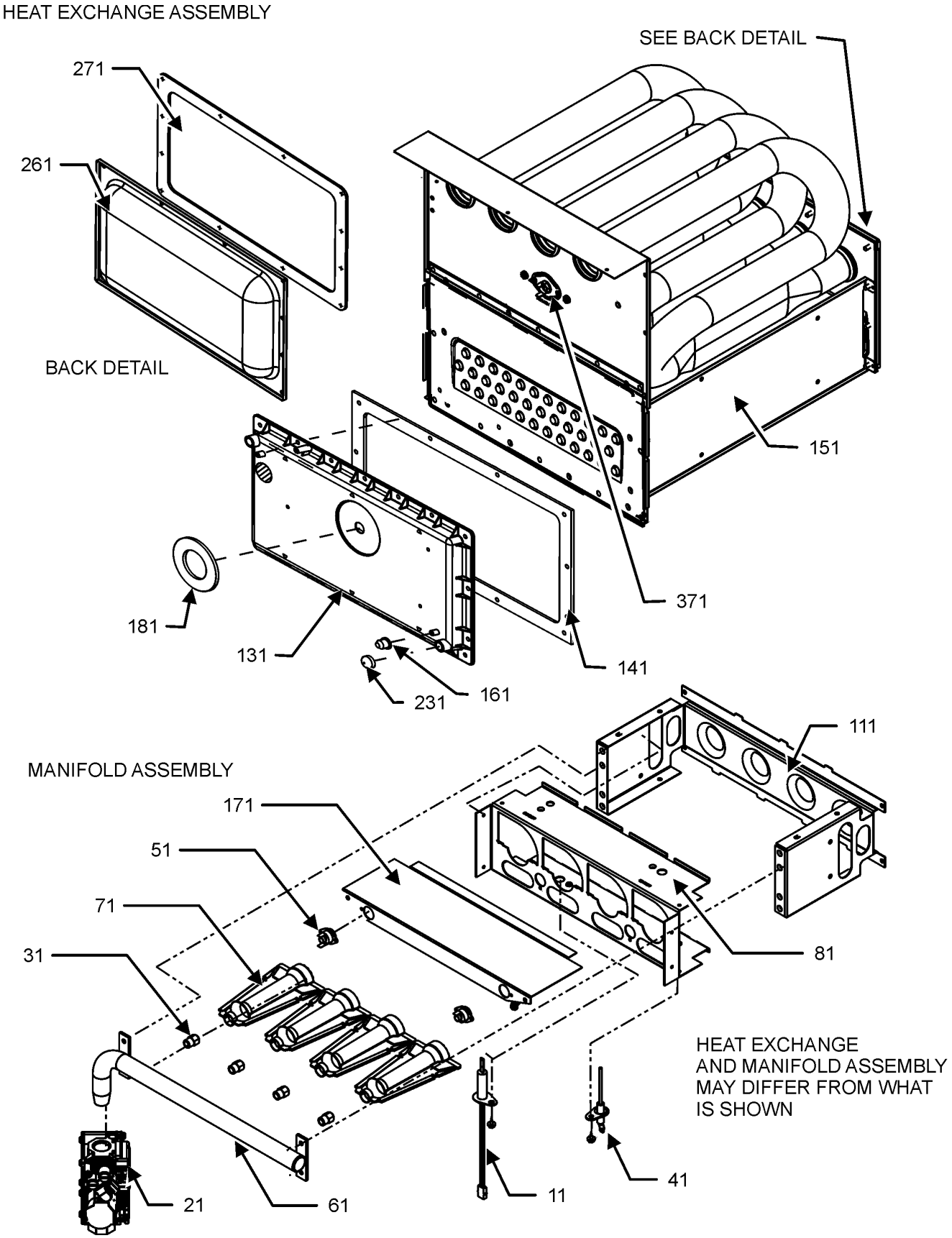

Heat Exchange and Manifold Assembly

Ref. No:	Part No:	Description:	Ref. No:	Part No:	Description:
Image 1:					
11	0130F00008	IGNITOR-SINI 17 SEC			
21	0151M00027	GAS VALVE			
31	10716005	ORIFICE (QTY 2)			
41	0130F00010	FLAME SENSOR			
51	0130F00123	LIMIT, RESET MAN (M4)			
51	10123538	LIMIT-MAN-LIGHT GREEN (M2)			
51	10123533	LIMIT-RESET MAN-YELLOW (M1, M3)			
61	0163F00007	MANIFOLD (M1)			
61	0163F00008	MANIFOLD (M2)			
61	0163F00010	MANIFOLD (M4)			
61	0163F00014	MANIFOLD (M3)			
71	0163F00017	BECKETT BURNER (QTY 2)			
81	0121F00456	BRACKET-BURNER 2 (M1)			
81	0121F00455	BRACKET-BURNER 3 (M2)			
81	0121F00454	BRACKET-BURNER 4 (M3)			
81	0121F00453	BRACKET-BURNER 5 (M4)			
111	0121F00469	ORIFICE BRACKET-BURNER 2 (M1)			
111	0121F00468	ORIFICE BRACKET-BURNER 3 (M2)			
111	0121F00467	ORIFICE BRACKET-BURNER 4 (M3)			
111	0121F00466	ORIFICE BRACKET-BURNER 5 (M4)			
131	0161F00072	COVER FRONT (M4)			
131	0161F00053	COVER, FRONT (M1)			
131	0161F00078	COVER, FRONT (M2)			
131	0161F00079	COVER, FRONT (M3)			
141	0154F00026	GASKET FRONT COVER (M1, M2, M3)			
141	0154F00030	GASKET FRONT COVER (M4)			
151	0257F20077	HEAT EXCHANGER ASSY (M1)			
151	0257F20078	HEAT EXCHANGER ASSY (M2)			
151	0257F20079	HEAT EXCHANGER ASSY (M3)			
151	0257F20080	HEAT EXCHANGER ASSY (M4)			
161	M0326804	TUBE PLUG			
171	0121F00539	SHEILD, BURNER (M1)			
171	0121F00540	SHEILD, BURNER (M2)			
171	0121F00541	SHEILD, BURNER (M3)			
171	0121F00542	SHEILD, BURNER (M4)			
181	0154F00043	GASKET ID BLOWER			
231	A1781105	CAP-VINYL .500			
261	0121F00317	COVER, REAR (M1, M2, M3)			
261	0121F00318	COVER, REAR (M4)			
271	0154F00037	GASKET, REAR CVR (M1, M2, M3)			
271	0154F00038	GASKET, REAR CVR (M4)			
371	20162904	LIMIT, PRIMARY (M3)			
371	20162906	LIMIT, PRIMARY (M1, M2, M4)			
NS	0121F00583	INSULATION, RETAINER (M1, M2, M3)			
NS	0121F00584	INSULATION, RETAINER (M4)			
NS	0121F00439	PRIMARY LIMIT-HEAT SHIELD			
NS	0121F00355	SHIELD, COIL (QTY 2)			

Expanded Model Nomenclature

M1 - AD9T960403BNAA
M2 - AD9T960603BNAA
M3 - AD9T960803BNAA
M4 - AD9T961005CNAA