AMVT***P1300**
AIR HANDLERS INSTALLATION & OPERATING INSTRUCTIONS

© 2026 Daikin Comfort Technologies Manufacturing, Inc.
www.goodmanmfg.com - or - www.amana-hac.com
19001 Kermier Rd., Waller, TX 77484
P/N: IOG-4053C Date: November 2026

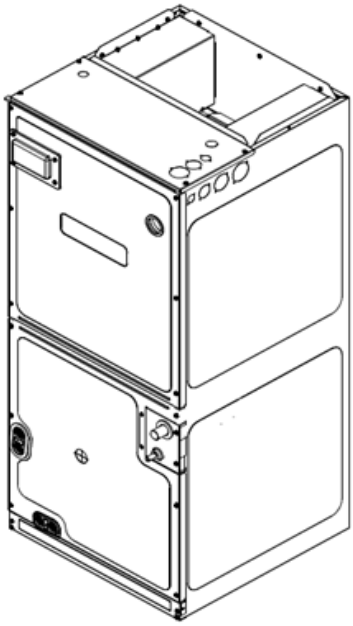

RECOGNIZE SYMBOL THIS AS A SAFETY PRECAUTION

NOTE: SPECIFICATIONS AND PERFORMANCE DATA LISTED HEREIN ARE SUBJECT TO CHANGE WITHOUT NOTICE.

NOTE: This equipment is only approved for use with R-32 refrigerant.

NOTE: the installer must refer to section 22.2 for the maximum possible refrigerant charge and minimum (air conditioned) room area which must be recorded on the serial plate.

QUEBEC DISCLOSURE REGARDING AVAILABILITY OF REPLACEMENT PARTS, REPAIR SERVICES AND INFORMATION FOR MAINTENANCE AND REPAIR: Daikin Comfort Technologies Manufacturing, Inc. (Daikin) does not guarantee the availability of (1) replacement parts; (2) repair services; and (3) information necessary to maintain or repair products, within the meaning of section 39.1 of the Consumer Protection Act, CQLR, c P-40.1 and section 79.18 of the Regulation respecting the application of the Consumer Protection Act, CQLR, c P-40.1, r. 3.

AVIS POUR LE QUÉBEC CONCERNANT LA DISPONIBILITÉ DES PIÈCES DE RECHANGE, DES SERVICES DE RÉPARATION ET DES RENSEIGNEMENTS POUR L'ENTRETIEN ET LA RÉPARATION : Daikin Comfort Technologies Manufacturing, Inc. (Daikin) ne garantit pas la disponibilité (1) des pièces de rechange, (2) des services de réparation et (3) des renseignements pour l'entretien et la réparation, au sens de l'article 39.1 de la Loi sur la protection du consommateur, RLRQ c P-40.1 et de l'article 79.18 du Règlement d'application de la Loi sur la protection du consommateur, RLRQ c P-40.1, r 3.

WARNING

Only personnel that have been trained to install, adjust, service, maintenance or repair (hereinafter, "service") the equipment specified in this manual should service the equipment.

This equipment is not intended for use by persons (including children) with reduced physical, sensory or mental capacities, or lack of experience and knowledge, unless they have been given supervision or instruction concerning use of the appliance by a person responsible for their safety.

Children should be supervised to ensure that they do not play with the equipment.

The manufacturer will not be responsible for any injury or property damage arising from improper supervision, service or service procedures. If you service this unit, you assume responsibility for any injury or property damage which may result. In addition, in jurisdictions that require one or more licenses to service the equipment specified in this manual, only licensed personnel should service the equipment. Improper supervision, installation, adjustment, servicing, maintenance or repair of the equipment specified in this manual, or attempting to install, adjust, service or repair the equipment specified in this manual without proper supervision or training may result in product damage, property damage, personal injury or death.

WARNING

Do not bypass safety devices.

This device, which was assembled by Daikin Comfort Technologies Manufacturing, INC., contains a component that is classified as an intentional radiator. This intentional radiator has been certified by the FCC: FCC ID QOQ-GM220P. And this international radiator has an Industry Canada ID: IC QOQ-GM220P.
This device complies with Part 15 of the FCC's Rules. Operation of this device is subject to two conditions:
(1) This device may not cause harmful interference; and
(2) This device must accept any interference received, including interference that may cause undesirable operation.
And this device meets the applicable Industry Canada technical specifications.
The manufacturer of the intentional radiator (model no. GM220P) is Silicon Laboratories Finland Oy, which can be contacted by calling 617-951-0200. (www.silabs.com)
The FCC responsible party is Daikin Comfort Technologies Manufacturing, INC. may be contacted by calling 713-861-2500, or at 19001 Kermier Rd., Waller TX 77484. (www.goodmanmfg.com)
This equipment complies with FCC radiation exposure limits. To ensure compliance, human proximity to the antenna shall not be less than 20 cm during normal operations.

NOTE: Changes or modifications not expressly approved by the party responsible for compliance could void the user's authority to operate the equipment.

AMANA® HEATING & AIR CONDITIONING / TM 2026 Amana. Manufactured under license by Daikin. Limited warranty provided by the manufacturer. All trademarks are the property of their respective owners.

Contents

1 Important Safety Instructions ... 2
2 Shipping Inspection ... 4
2.1 Parts ... 4
2.2 Handling ... 4
2.3 Shipping Material Removal ... 4
2.3.1 Blower Support Bracket Removal ... 4
3 Codes & Regulations ... 4
4 Replacement Parts ... 4
5 Pre-Installation Considerations ... 4
5.1 Preparation ... 4
5.2 System Matches ... 5
5.3 Interconnecting Tubing ... 5
5.4 Clearances ... 5
5.5 Horizontal Applications ... 5
5.6 Access ... 5
6 Installation Location ... 5
6.1 Upflow and Downflow Installation ... 5
6.2 Horizontal Left Installation ... 6
6.2.1 Instruction to Relocate Sensor Bracket Assembly from Upflow to Horizontal Left ... 6
6.3 Horizontal Right Installation ... 7
6.4 Humid Environment Installations ... 7
6.4.1 All Installations – Humid Environments ... 7
6.4.2 Downflow Installations – Humid Environments ... 7
6.4.3 Horizontal Installations – Humid Environments ... 7
6.5 Altitude Adjustment Factor ... 7
7 Refrigerant Lines ... 9
7.1 Tubing Size/Length ... 9
7.2 Tubing Preparation ... 9
7.3 Brazing ... 9
7.4 Tubing Connections ... 12
7.5 Standing Pressure Test (Recommended before vacuum) ... 12
7.6 Deep Vacuum Method ... 12
7.7 Leak Detection Method ... 12
8 Condensate Drain Lines ... 12
9 Ductwork ... 13
9.1 Return Ductwork ... 13
10 Return Air Filters ... 14
11 Electric Heat ... 14
12 Electrical and Control Wiring ... 16
12.1 Building Electrical Service Inspection ... 17
12.2 Wire Sizing ... 17
12.3 Maximum Overcurrent Protection (MOP) ... 17
12.4 Electrical Connections – Supply Voltage ... 17
12.4.1 Air Handler Only (Non-Heat Kit Models) ... 17
12.4.2 Air Handler - Non-Circuit Breaker Heat Kits ... 18
12.4.3 Air Handler With Circuit Breaker Heat Kit ... 18
12.5 Low Voltage Connections ... 18
12.5.1 Thermostats ... 18
12.6 Accessory Installations ... 18
13 CoolCloud HVAC Phone Menu ... 18
14 Quick Start Guide for Communication Outdoor Units 19
14.1 Charging ... 19
15 Quick Start Guide for Non-Communicating Outdoor Units ... 19
15.1 Electric Heater Kit Testing ... 21
16 Dehumidification ... 21
17 Auxiliary Alarm Switch ... 21
18 Start-Up Procedure ... 21
18.1 Thermal Expansion Valve System Adjustment ... 22
19 Accessory Control (Humidifiers, Dehumidifiers, Ventilators) ... 23
20 Ramping Profiles ... 24
21 Achieving 1.4% Low Leakage Rate ... 24
22 Regular Maintenance ... 24
22.1 Circulating Air Filters ... 24
22.2 Refrigeration Detection System (RDS) ... 24
23 Air Handler Troubleshooting Matrix ... 27
24 Air Handler Troubleshooting Matrix (Continued) ... 28
25 Air Handler Display ... 29
26 Airflow Label ... 31
27 Wiring Diagram ... 32
28 Dehumidification Control Options ... 36
29 Start-Up Checklist ... 37

1 Important Safety Instructions

The following symbols and labels are used throughout this manual to indicate immediate or potential safety hazards. It is the owner's and installer's responsibility to read and comply with all safety information and instructions accompanying these symbols. Failure to heed safety information increases the risk of personal injury, property damage, and/or product damage.

WARNING

HIGH VOLTAGE
Disconnect all power before servicing or installing this unit. Multiple power sources may be present. Failure to do so may cause property damage, personal injury or death.

WARNING

To prevent the risk of property damage, personal injury, or death, do not store combustible materials or use gasoline or other flammable liquids or vapors in the vicinity of this unit.

WARNING

This product is factory-shipped for use with 208V/240V/1PH/60 Hz electrical power supply. DO NOT reconfigure this air handler to operate with any other power supply.

CAUTION

When installing or servicing this equipment, safety clothing, including hand and eye protection, is strongly recommended. If installing in an area that has special safety requirements (hard hats, etc.), Observe these requirements.

WARNING

A refrigerant leak detection system is installed. The unit must be powered on at all times except for service.

WARNING

To avoid property damage, personal injury or death due to electrical shock, this unit MUST have AN UNINTERRUPTED, UNBROKEN electrical ground. The electrical ground circuit may consist of an appropriately sized electrical wire connecting the ground lug in the unit control box to the building electrical service panel. Other methods of grounding are permitted if performed in accordance with the National Electric Code (NEC) / American National Standards Institute (ANSI) / National Fire Protection Association (NFPA) 70 and local/state codes. In Canada, electrical grounding is to be in accordance with the Canadian Electric Code (CSA) C22.1.

WARNING

This unit should be installed in a manner so that it is not accessible to the public.

WARNING

IF ANY HOT WORK IS TO BE CONDUCTED ON THE REFRIGERATING EQUIPMENT OR ANY ASSOCIATED PARTS, APPROPRIATE FIRE EXTINGUISHING EQUIPMENT SHALL BE AVAILABLE ON HAND. HAVE A DRY POWDER OR CO2 FIRE EXTINGUISHER ADJACENT TO THE HOT WORK AREA.

ENSURE THAT THE AREA IS IN THE OPEN OR THAT IT IS ADEQUATELY VENTILATED BEFORE BREAKING INTO THE SYSTEM OR CONDUCTING ANY HOT WORK. A DEGREE OF VENTILATION SHALL CONTINUE DURING THE PERIOD THAT THE WORK IS CARRIED OUT. THE VENTILATION SHOULD SAFELY DISPERSE ANY RELEASED REFRIGERANT AND PREFERABLY EXPEL IT EXTERNALLY INTO THE ATMOSPHERE.

DANGER
PELIGRO

CARBON MONOXIDE POISONING HAZARD

Special Warning for Installation of Furnace or Air Handling Units in Enclosed Areas such as Garages, Utility Rooms or Parking Areas

Carbon monoxide producing devices (such as an automobile, space heater, gas water heater, etc.) should not be operated in enclosed areas such as unventilated garages, utility rooms or parking areas because of the danger of carbon monoxide (CO) poisoning resulting from the exhaust emissions. If a furnace or air handler is installed in an enclosed area such as a garage, utility room or parking area and a carbon monoxide producing device is operated therein, there must be adequate, direct outside ventilation.

This ventilation is necessary to avoid the danger of CO poisoning which can occur if a carbon monoxide producing device continues to operate in the enclosed area. Carbon monoxide emissions can be (re)circulated throughout the structure if the furnace or air handler is operating in any mode.

CO can cause serious illness including permanent brain damage or death. B10259-216

RIESGO DE INTOXICACIÓN PORMONÓXIDO DE CARBONO

Advertencia especial para la instalación de calentadores ómanejadoras de aire en áreas cerradas como estacionamientos ó cuartos de servicio.

Los equipos ó aparatos que producen monóxido de carbono (tal como automóvil, calentador de gas, calentador de agua por medio de gas, etc) no deben ser operados en áreas cerradas debido al riesgo de envenenamiento por monóxido de carbono (CO) que resulta de las emisiones de gases de combustión. Si el equipo ó aparato se opera en dichas áreas, debe existir una adecuada ventilación directa al exterior.

Esta ventilación es necesaria para evitar el peligro de envenenamiento por CO, que puede ocurrir si un dispositivo que producemonóxido de carbono sigue operando en el lugar cerrado.

Las emisiones de monóxido de carbono pueden circular a través del aparato cuando se opera en cualquier modo.

El monóxido de carbono puede causar enfermedades severas como daño cerebral permanente ó muerte. B10259-216

RISQUE D'EMPOISONNEMENT AUMONOXYDE DE CARBONE

Avertissement special au sujet de l'installation d'appareils de chauffage ou de traitement d'air dans des endroits clos, tets les garages, les locaux d'entretien et les stationnements.

Evitez de mettre en marche les appareils produisant du monoxyde de carbone (tels que les automobile, les appareils de chauffage autonome,etc.) dans des endroits non ventilés tels que les d'empoisonnement au monoxyde de carbone. Si vous devez faire fonctionner ces appareils dans un endroit clos, assures-vous qu'il y ait une ventilation directe provenant de l'exterier.

Cette ventilation est nécessaire pour éviter le danger d'intoxication au CO pouvant survenir si un appareil produisant du monoxyde de carbone continue de fonctionner au sein de la zone confinée.

Les émissions de monoxyde de carbone peuvent etre recircules dans les endroits clos, si l'appareil de chauffage ou de traitement d'air sont en marche.

Le monoxyde de carbone peut causer des maladies graves telles que des dommages permanents au cerveau et meme la mort. B10259-216

2 Shipping Inspection

Always transport the unit upright; laying the unit on its side or top during transit may cause equipment damage. The installer should inspect the product upon receipt for shipping damage and subsequent investigation is the responsibility of the carrier. The installer must verify the model number, specifications, electrical characteristics, and accessories are correct prior to installation. The distributor or manufacturer will not accept claims from dealers for transportation damage or installation of incorrectly shipped units.

2.1 Parts

Inspect the unit to verify all required components are present and intact. Report any missing components immediately to the manufacturer or to the distributor. Use only factory authorized replacement parts (see Section 4). Make sure to include the full product model number and serial number when reporting and/or obtaining service parts.

2.2 Handling

Use caution when transporting / carrying the unit. Do not move unit using shipping straps. Do not carry unit with hooks or sharp objects. The preferred method of carrying the unit after arrival at the job site is to carry via a two-wheel hand truck from the back or sides or via hand by carrying at the cabinet corners.

2.3 Shipping Material Removal

IMPORTANT: All Shipping Material used to protect the equipment, and the equipment's components, during transit should be removed before final installation.

2.3.1 Blower Support Bracket Removal

A shipping bracket (refer to Figure 1 & 2) has been factory installed in this Air Handler to prevent any unintentional damage to the blower deck assembly during transit. The shipping bracket should be removed prior to installation. To remove the shipping bracket, remove the two (2) screws that secure the bracket to the equipment. Screw (A) is removed from the control deck and Screw (B) is removed from the inside corner post. The bracket can be discarded after removal.

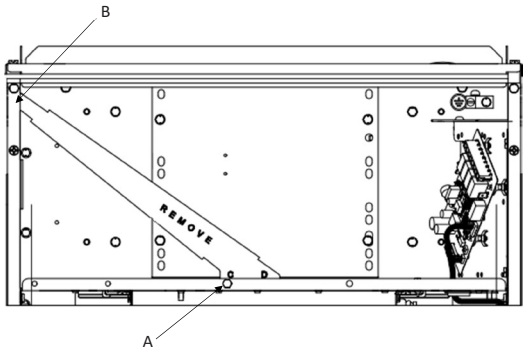

Figure 1
Blower Support Bracket Removal

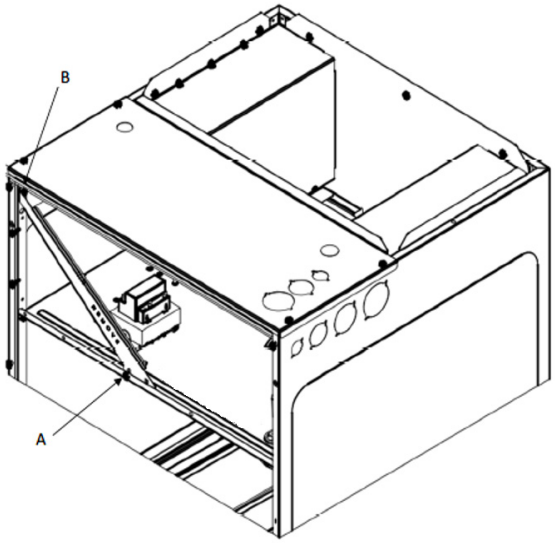

Figure 2
Blower Support Bracket Removal

3 Codes & Regulations

This product is designed and manufactured to comply with applicable national codes. Such as UL60335 2-40, ASHRAE 15, ASHRAE 15.2, IAPMO Uniform Mechanical Code, ICC International Mechanical Code, or CSA B52. Installation in accordance with such codes and / or prevailing local codes / regulations is the responsibility of the installer. The manufacturer assumes no responsibility for equipment installed in violation of any codes or regulations.

The United States Environmental Protection Agency (EPA) has issued various regulations regarding the introduction and disposal of refrigerants. Failure to follow these regulations may harm the environment and can lead to the imposition of substantial fines. Should you have any questions please contact the local office of the EPA and / or refer to EPA's website www.epa.gov.

4 Replacement Parts

When reporting shortages or damages, or ordering repair parts, give the complete product model and serial numbers as on the unit's Serial and Rating Plate. Replacement parts for this product are available through your contractor or local distributor.

5 Pre-Installation Considerations

5.1 Preparation

Keep this document with the unit. Carefully read all instructions for the installation prior to installing product. Make sure each step or procedure is understood and any special considerations are taken into account before starting installation. Assemble all tools, hardware and supplies needed to complete the installation. Some items may need to be purchased locally. Make sure everything needed to install the product is on hand before starting.

5.2 System Matches

The entire system (combination of indoor and outdoor sections) must be manufacturer approved and Air-Conditioning, Heating, and Refrigeration Institute (AHRI) listed.

NOTE: Installation of unmatched systems is not permitted. Damage or repairs due to installation of unmatched systems is in not covered under the warranty.

5.3 Interconnecting Tubing

Give special consideration to minimize the length of refrigerant tubing when installing air handlers. Refer to Remote Cooling / Heat Pump Service Manual, and TP-110 Long Line Set Application R-32 for tubing guidelines. If possible, allow adequate length of tubing such that the coil may be removed (for inspection or cleaning services) from the cabinet without disconnecting the tubing.

5.4 Clearances

WARNING

WHEN INSTALLED IN A ROOM WITH AN AREA LESS THAN THAT OUTLINED IN TABLE 17, THAT ROOM SHALL BE WITHOUT CONTINUOUSLY OPERATING OPEN FLAMES (FOR EXAMPLE AN OPERATING GAS APPLIANCE) OR OTHER POTENTIAL IGNITION SOURCES (FOR EXAMPLE AN OPERATING ELECTRIC HEATER, HOT SURFACES).

WARNING

AUXILIARY DEVICES WHICH MAY BE A POTENTIAL IGNITION SOURCE ARE NOT TO BE INSTALLED IN THE DUCT WORK. SUCH POTENTIAL IGNITION SOURCES INCLUDE HOT SURFACES WITH A TEMPERATURE EXCEEDING 650°C AND ELECTRIC SWITCHING DEVICES. FOR EXAMPLE ELECTRONIC AIR FILTERS ARE A POTENTIAL IGNITION SOURCE.

WARNING

THE ONLY AUXILIARY DEVICES APPROVED BY THE APPLIANCE MANUFACTURER OR DECLARED SUITABLE WITH THE REFRIGERANT SHALL BE INSTALLED IN CONNECTING DUCTWORK. IF AN EXISTING DEVICE IS NOT APPROVED BY THE APPLIANCE MANUFACTURER FOR USE WITH THE REFRIGERANT THE DEVICE MUST BE REMOVED FROM THE DUCTWORK.

The unit clearance from a combustible surface may be 0”. However, service clearance must take precedence. A minimum of 24” in front of the unit for service clearance is required. Additional clearance on one side or top will be required for electrical wiring connections. Consult all appropriate regulatory codes prior to determining final clearances. When installing this unit in an area that may become wet (such as crawl spaces), elevate the unit with a sturdy, non-porous material. In installations that may lead to physical damage (i.e. a garage) it is advised to install a protective barrier to prevent such damage. Always install units such that a positive slope in condensate line (1/4” per foot) is allowed.

Refrigerant lines must be routed depending on configuration of unit to maintain the required 24” minimum clearance for service. Consult all appropriate regulatory codes prior to determining final clearances. In installations that may lead to physical damage (i.e. a garage) it is advised to install a protective barrier to prevent such damage. Always install units such that a positive slope in condensate line (1/4” per foot) is allowed.

Further, any joints made in the installation between parts of the refrigerating system must be accessible for maintenance purposes.

5.5 Horizontal Applications

If installed above a finished living space, a secondary drain pan with float switch (as required by many building codes), must be installed under the entire unit and its condensate drain line must be routed to a location such that the user will see the condensate discharge.

5.6 Access

This unit should be installed in a manner so that it is NOT accessible to the public.

6 Installation Location

NOTE: These air handlers are designed for indoor installation only at a max altitude of 10,500 feet above sea level or a min altitude of -184 feet below sea level.

If the unit is located in an unconditioned area with high ambient temperature and/or high humidity, the air handler may be subject to nuisance sweating of the casing. On these installations, a wrap of 2” fiberglass insulation with a vapor barrier is recommended. A secondary drain pan below the unit is also recommended to protect the installation site.

This product line may be installed in one of the upflow, downflow, horizontal left or horizontal right orientations as shown in Figures 5, 6, 7 and 8. The unit may be installed in horizontal left orientation as shipped (refer to specific sections for more information).

6.1 Upflow and Downflow Installation (Figure 5 & 6)

1. Remove blower access panel, coil access panel, and tubing access panel as shown in figure 13 & 14. The coil access panel and tubing panel may remain screwed together during this procedure. Remove and retain the seven (7) screws securing the coil access panel to the cabinet and the six (6) screws securing the blower access panel to the cabinet.
2. Slide the coil assembly out from the cabinet. Use the drain pan to pull the assembly from the cabinet. IMPORTANT: Do not use manifolds, copper lines, or the flowrator to pull the coil assembly out. Failure to do so may result in braze joint damage and leaks.

3. Removal of the center support is required on units with 21” wide cabinet. Remove and retain the two (2) screws that secure the center support to the cabinet. Remove the center support.
4. The horizontal drip shield, side drain pan, and drain pan extension must be removed. Follow the “Side Drain Pan and Extension Removal Instructions”.
5. For Upflow Installation:
   a. Using the drain pan to hold the coil assembly, slide the coil assembly back into the cabinet.
   b. Reinstall the center support (if removed) using the two (2) screws removed in Step 3.
   c. Reinstall the coil access panels and reinstall blower access panel removed in Step 1 as shown in Figure 10.
6. For Downflow Installation:
   a. Position the unit in the downflow position.
   b. Using the drain pan to hold the coil assembly, slide the coil assembly back into the cabinet on the downflow brackets as shown in Figure 11.
   c. Reinstall the center support (if removed) using the two (2) screws removed in Step 3.
   d. Reinstall the coil access panels and reinstall blower access panel removed in Step 1 as shown in Figure 12.

NOTE: If the unit is in the upflow position, there is no need to rotate the motor. If the unit is in the downflow position, loosen motor mount and rotate motor as shown in the Motor Orientation figure below. Be sure motor is oriented with the female connections on the casing down. If the motor is not oriented with the connections down, water could collect in the motor and may cause premature failure.

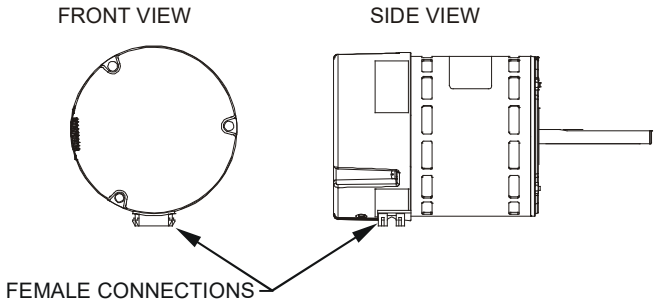

Side Drain Pan and Extension Removal Instructions

Refer to Figure 4, remove the two (2) screws that secure the drip shield support brackets to the condensate collectors (front and back). Unsnap the side drain pan from the bottom drain pan using a screwdriver or any small lever. The side drain pan, drip shield brackets and the drain pan extension may now be removed. From Figure 4, drain port labeled (A) is the primary drain for this application and condensate drain line must be attached to this drain port. Drain port (a) is for the secondary drain line (if used). When the side drain pan is removed, the drain port opening in the access panel must be covered by the accessory drain port plug (DPK1) as shown in Figure 3. Refer to table 1 for kit number.

Drain Port Plug Kit		
Kit Number	**Description**	**Application**
DPK1	Side Drain Port Plug	All Models

Table 1

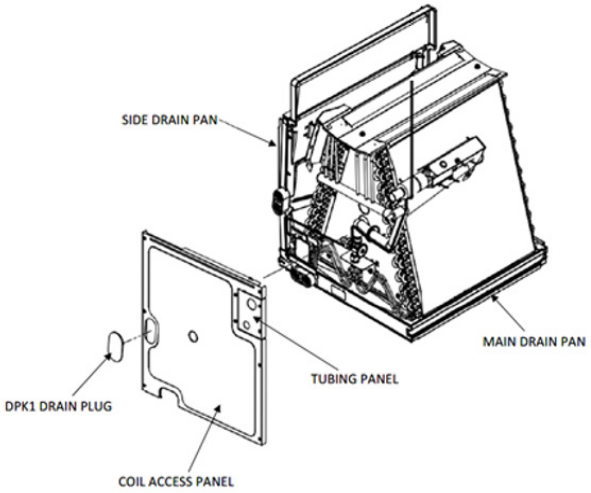

Drain Pan
Figure 3

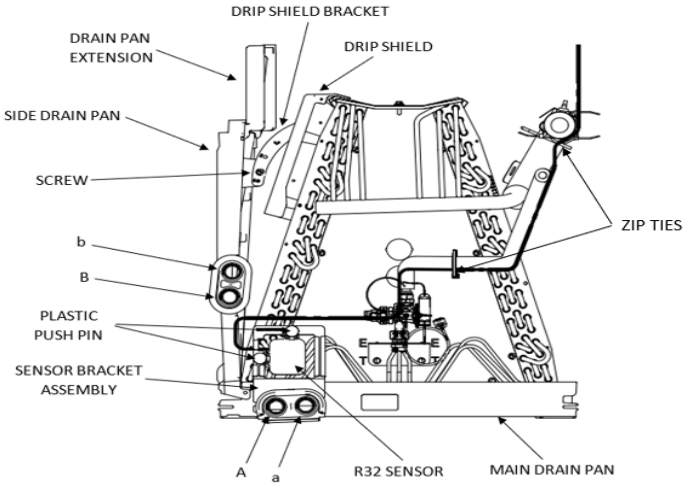

Side Drain Pan Removal
Figure 4

6.2 Horizontal Left Installation (Figure 7)

No field modifications are permissible for this application. Install unit as shown in Figure 7.

Drain port labeled (B) in Figure 4 is the primary drain for this application and condensate drain line must be attached to this drain port. Drain port (b) is for the secondary drain line (if used).

Remove red plugs from side drain pan before connecting condensate drain pipes. Use removed plug to close drain ports on vertical drain pan.

6.2.1 Instruction to relocate Sensor bracket assembly from Upflow to Horizontal left

1. Take off the blower access panel

2. Take off the drain port gaskets on main drain pan and side drain pan
3. Take off the R-32 sensor bracket assembly
4. Put R-32 sensor bracket assembly to the side drain port correctly as shown in Figure 7. The “FRONT” print on sensor bracket should be in the front
5. Place gaskets back to the drain ports correctly. The “FRONT” print on the gaskets should be in the front.
6. Sensor wiring should be rerouted as shown in Figure 7.
7. Reassemble the blower access panel to the unit.

6.3 Horizontal Right Installation (Figure 8)

NOTE: For AMVT24BP1300 only: If installing a filter, an external filter must be used when installing the unit in Horizontal Right. A filter will not fit on the internal filter rails in these applications.**

1. Before inverting the air handler, remove blower access panel and coil access panel. The coil access panel and tubing panel may remain screwed together during this procedure. Refer to Figure 3. Remove and retain the seven (7) screws securing the coil access panel to the cabinet and the six (6) screws securing the blower access panel to the cabinet. As shown figures 13& 14
2. Removal of the center support is required on units with 21” wide cabinet. Remove and retain the two (2) screws that secure the center support to the cabinet. Remove the center support. Refer to Figure 9
3. Slide the coil assembly out from the cabinet. Use the drain pan to pull the assembly from the cabinet.

NOTE: Do not use manifolds, copper lines, or the flowrator to pull the coil assembly out. Failure to do so may result in braze joint damage and leaks.

4. Position the unit in the downflow position. Refer to Figure 6
5. Remove side drain pan extension if present.
6. Using the drain pan to hold the coil assembly, slide the coil assembly back into the cabinet on the downflow brackets. As shown in Figure 6
7. Reinstall the center support (if removed) using the two (2) screws removed in Step 3.
8. Reinstall the coil access panels and reinstall blower access panel removed in Step 1 as shown in Figure 12.
9. Drain Connections for Horizontal Right Installation
   a. Drain port labeled (B) in Figure 4 is the primary drain for this application and condensate drain line must be attached to this drain port. Drain port (b) is for the secondary drain line (if used).
   b. Remove red plugs from side drain pan before connecting condensate drain pipes. Use removed plugs to close drain ports on vertical drain pan.

NOTE: If removing only the coil access panel from the unit, the filter access panel <u>must</u> be removed first. Failure to do so will result in panel damage.

6.4 Humid Environment Installations

NOTE: Each service kit mentioned in this instruction is available through your local distributor. The kits are not supplied with the air handler and must be used to assist with condensation management in humid environment applications. The individual installation instructions provided with each kit must be followed.

6.4.1 ALL INSTALLATIONS – HUMID ENVIRONMENTS

Installations in areas where the return air environment sees humidity levels above 65% relative humidity, a High Humidity Kit (HHK) must be used. See Table 2 for Model and Kit assignment.

HHK0004	HHK0005	HHK0006	HHK0008
AMVT24B AMVT30B AMVT36B	AMVT36C AMVT42C	AMVT48C	AMVT60D

Table 2

6.4.2 Downflow Installations – Humid Environments

To prevent the coil pan “sweating”, the mandatory Downflow Kit (DFK) must also be used in addition to the High Humidity Kit (HHK). See Table 3 for the correct DFK for each model.

DFKE-02	DFKE-03
AMVT24B AMVT30B AMVT36B AMVT36C AMVT42C	AMVT48C AMVT60D

Table 3

6.4.3 Horizontal Installations – Humid Environments

In addition to the High Humidity Kit (HHK), in applications where the air handler is installed in the horizontal position (Left or Right), and the return air environment sees humidity levels above 65% relative humidity, a Condensate Management Kit (CMK) must be used for field application. Applicable Kit and Model listing can be found in Table 4.

CMK0018	CMK0019	CMK0020
AMVT24B AMVT36C	AMVT30B AMVT36B AMVT42C	AMVT48C AMVT60D

Table 4

6.5 Altitude Adjustment Factor

The Indoor equipment mitigation requirements are calculated at sea level. For higher altitudes adjust the minimum room area specified on the Serial Plate by the corresponding altitude adjustment factor shown below. This table is provided as a reference.

Adjusted room area (Amin adj) is the product of the minimum room area specified in the serial plate and the adjustment factor AF, as shown in below formula

Amin adj = Amin (Minimum air conditioned room area from Table 17)* AF

Height in meters	Height in feet	Altitude Adjustment Factor (AF)
At sea level	At sea level	1.00
1~200	1~660	1.02
200~400	660~1320	1.03
400~600	1320~1970	1.05
600~800	1970~2630	1.07
800~1000	2630~3290	1.09
1000~1200	3290~3940	1.11
1200~1400	3940~4600	1.13
1400~1600	4600~5250	1.15
1600~1800	5250~5910	1.17
1800~2000	5910~6570	1.19
2000~2200	6570~7220	1.21
2200~2400	7220~7880	1.24
2400~2600	7880~8540	1.26
2600~2800	8540~9190	1.29
2800~3000	9190~9850	1.31
3000~3200	9850~10500	1.34

Table 5

NOTE: The altitude adjustment factor (AF) for any altitudes below sea level will be 1.00

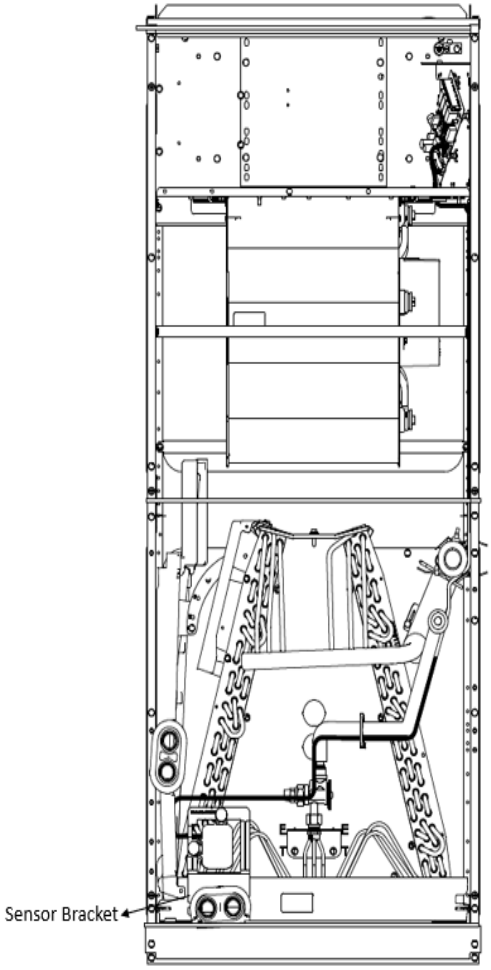

Upflow
Figure 5

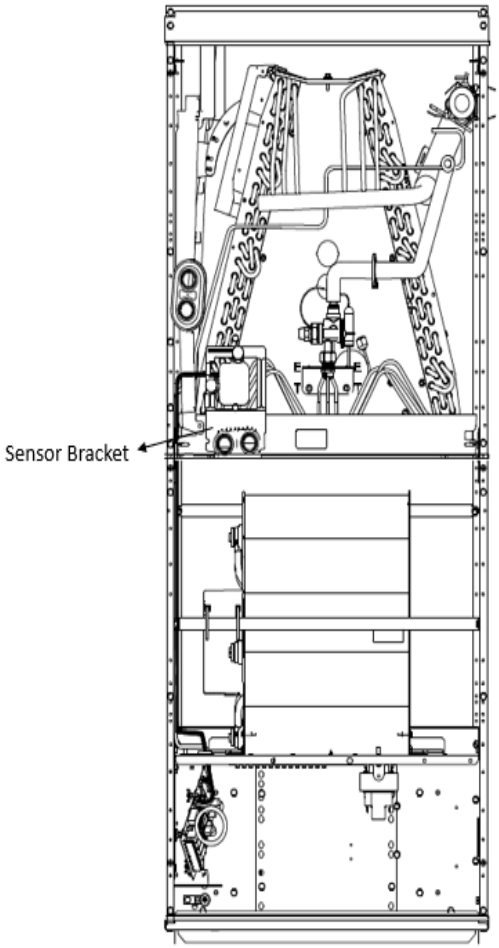

Downflow
Figure 6

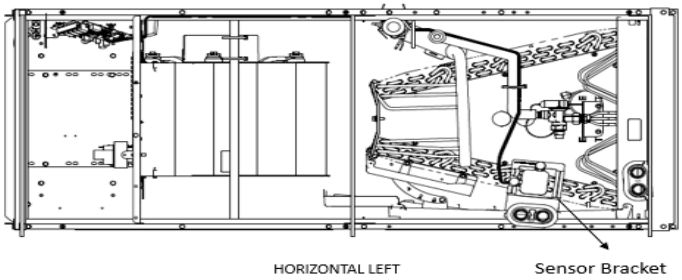

Horizontal Left
Figure 7

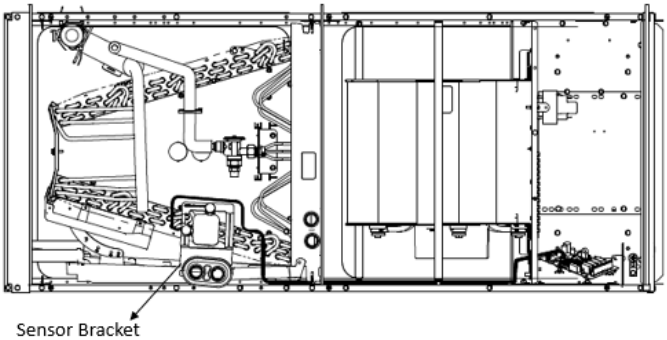

Horizontal Right
Figure 8

7 Refrigerant Lines

WARNING

DO NOT USE MEANS TO ACCELERATE THE DEFROSTING PROCESS OR TO CLEAN, OTHER THAN THOSE RECOMMENDED BY THE MANUFACTURER.

THE APPLIANCE SHALL BE STORED IN A ROOM WITHOUT CONTINUOUSLY OPERATING IGNITION SOURCES (FOR EXAMPLE: OPEN FLAMES, AN OPERATING GAS APPLIANCE OR AN OPERATING ELECTRIC HEATER.) DO NOT PIERCE OR BURN. BE AWARE THAT REFRIGERANTS MAY NOT CONTAIN AN ODOR.

WARNING

THIS PRODUCT IS FACTORY-SHIPPED WITH DRY NITROGEN MIXTURE GAS UNDER PRESSURE. USE APPROPRIATE SERVICE TOOLS AND FOLLOW THESE INSTRUCTIONS TO PREVENT INJURY.

WARNING

WORK SHALL BE UNDERTAKEN UNDER A CONTROLLED PROCEDURE TO MINIMIZETHE RISK OF FLAMMABLE GAS OR VAPOR BEING PRESENT WHILE THE WORK IS BEING PERFORMED.

WARNING

ONLY BRAZING TECHNIQUES AND APPROVED MECHANICAL JOINTS SHOULD BE USED TO CONNECT REFRIGERANT TUBING CONNECTIONS NON-APPROVED MECHANICAL CONNECTORS AND OTHER METHODS ARE NOT PERMITTED IN THIS SYSTEM CONTAINING A2L REFRIGERANT. APPROVED MECHANICAL JOINTS WILL BE DETAILED IN THE PRODUCTS SPECIFICATION SHEETS.

NOTE: Refrigerant tubing must be routed to allow adequate access for servicing and maintenance of the unit.

Do not install the air handler in a location that violates the instructions provided with the condenser. If the unit is located in an unconditioned area with high ambient temperature and/or high humidity, the air handler may be subject to nuisance sweating of the air handler cabinet. On these installations, a wrap of 2” fiberglass insulation with a vapor barrier is recommended.

Follow standards related to ASHRAE 15, ASHRAE 15.2, IAPMO Uniform Mechanical Code, ICC International Mechanical Code or CSA B52 during any installation. Piping must be accessible for inspection prior to being covered or enclosed in compliance with national and local codes.

Field-made refrigerant joints indoors shall be tightness tested. The test method shall have a sensitivity of 5 grams (0.176 oz) per year of refrigerant or better under a pressure of at least 0,25 times the maximum allowable pressure. No leak shall be detected. (Should be leak tight)

The indoor equipment and pipes must be securely mounted and guarded such that accidental rupture of equipment cannot occur from such events as moving furniture or reconstruction activities. Field-made refrigerant joints indoors shall be tightness tested.

Field pipework must be pressure tested with an inert gas and then vacuum tested prior to refrigerant charging

7.1 Tubing Size/Length

Give special consideration to minimize the length of refrigerant tubing when installing air handlers. Refer to Remote Cooling/Heat Pump Service, and TP-110 Long Line Set Application R-32 for tubing guidelines. If possible, airflow adequate length of tubing such that the coil may be removed (for inspection or cleaning services) from the cabinet without disconnecting the tubing.

7.2 Tubing Preparation

All cut ends are to be round, burr free, and clean. Failure to follow this practice increases the chances for refrigerant leaks. The suction line is spun closed and requires tubing cutters to remove the closed end.

Installation of pipe-work must be kept to a minimum. Pipe-work including piping material, pipe routing and installation must be protected from physical damage and shall not be installed in an unventilated space. Equipment piping in any occupied space shall be installed in such a way to protect against accidental damage in operation and service. Precautions must be taken to avoid excessive vibration or pulsation to refrigeration piping. Protection devices, piping and fittings shall be protected as far as possible against adverse environmental effects, for example, the danger of water collecting and freezing in relief pipes or the accumulation of dirt and debris.

WARNING

THIS UNIT MUST BE CHARGED WITH R-32 REFRIGERANT. ENSURE THAT SENSOR IS INSTALLED CORRECTLY AND IS OPERATIONAL.

7.3 Brazing

NOTE: Use heat trap material or wet cloth behind braze joints to protect TXV and access fittings from overheating during brazing line set connections.

Braze joints should be made only with the connections provided external to the cabinet. Do not alter the cabinet nor braze inside the cabinet. Do not alter the cabinet nor braze inside the cabinet. To avoid overheating after brazing, quench all brazed joints with water or a wet rag.

This system must be charged with R-32 refrigerant in order to operate safely.

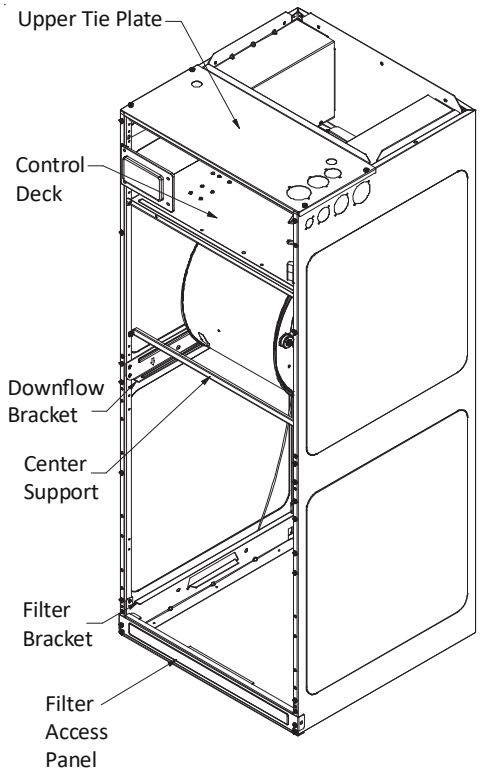

Internal Part Terminology
Figure 9

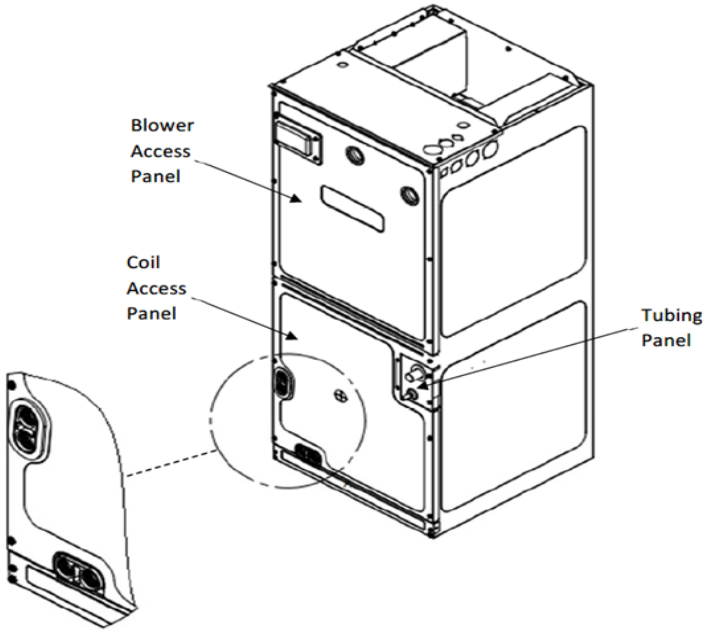

External Part Terminology
Figure 10

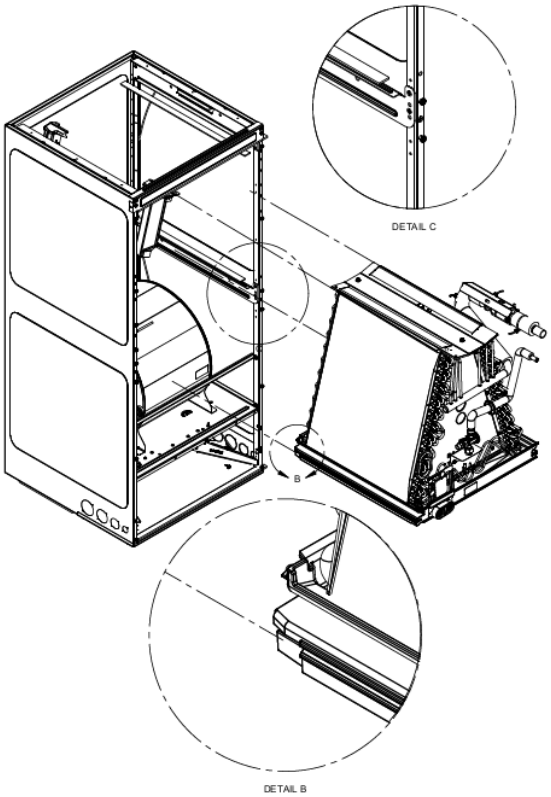

Coil Installation For Downflow
Figure 11

IMPORTANT NOTE: Ensure coil slides on the rails along the groove provided on the drain pan side walls. Failure to do so will result in improper condensate drainage.

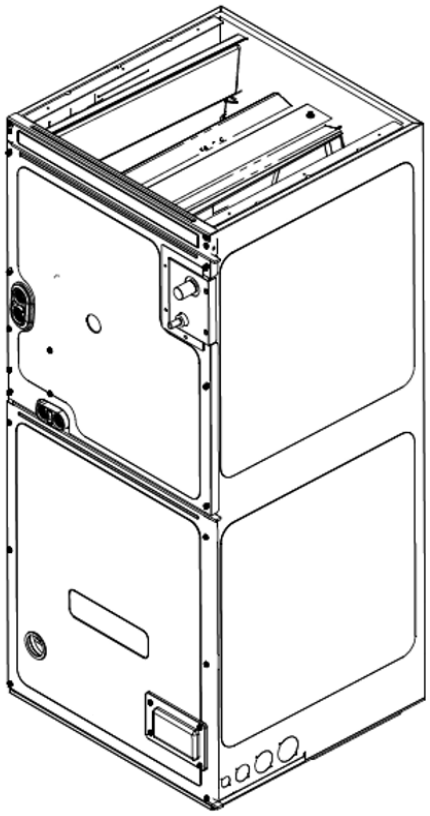

Access Panel Configuration for Downflow or Horizontal Right
Figure 12

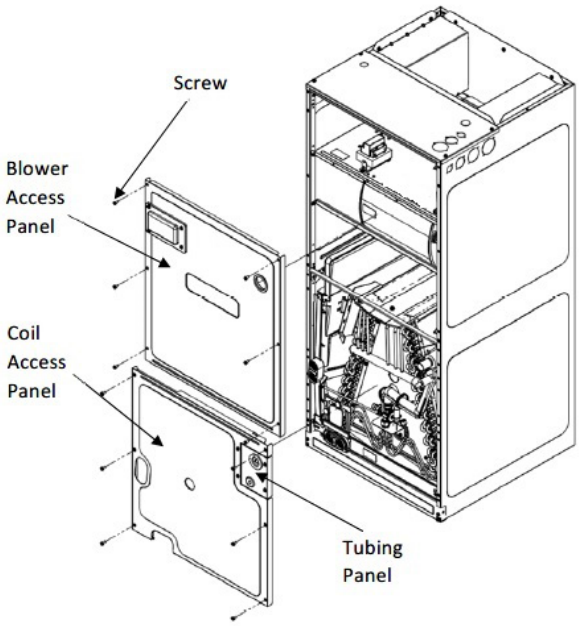

Exploded View of External Part Terminology for Upflow
Figure 13

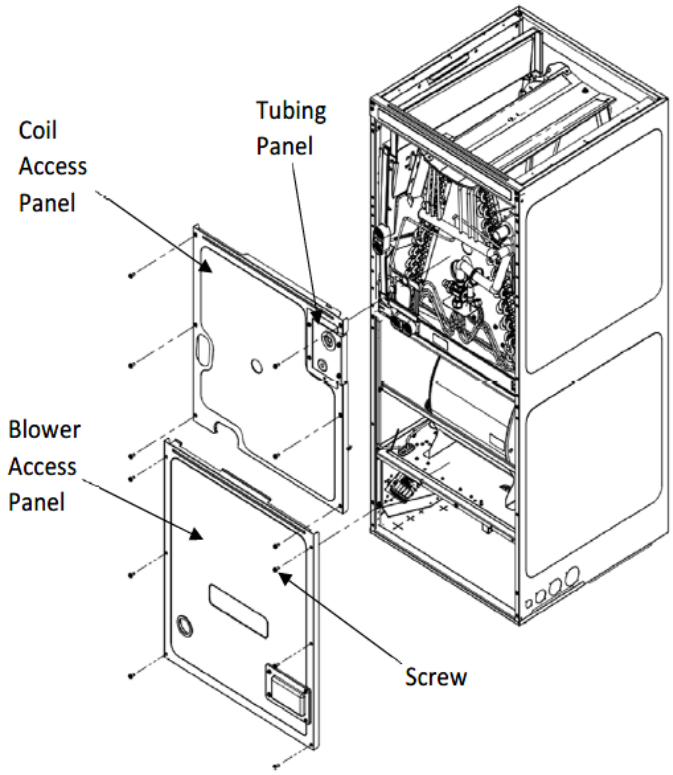

Exploded View of External Part Terminology for Downflow
Figure 14

When breaking into the refrigerant circuit to make repairs - or for any other purpose - conventional procedures shall be used. However, the flammability classification for any refrigerant must be considered. The following procedure shall be adhered to:

1. Safely remove refrigerant following local and national regulations;
2. Evacuate;
3. Purge the circuit with inert gas;
4. Evacuate;
5. Continuously flush or purge with inert gas when using flame to open circuit; and
6. Open the circuit.

For appliances containing flammable refrigerants, refrigerants purging shall be achieved by breaking the vacuum in the system with oxygen-free nitrogen and continuing to fill until the working pressure is achieved, then venting to atmosphere, and finally pulling down to a vacuum (optional for R-32). This process shall be repeated until no refrigerant is within the system (optional for R-32). When the final oxygen-free nitrogen charge is used, the system shall be vented down to atmospheric pressure to enable work to take place.

The outlet for the vacuum pump shall not be close to any potential ignition sources, and ventilation shall be available.

CAUTION

APPLYING TOO MUCH HEAT TO ANY TUBE CAN MELT THE TUBE. TORCH HEAT REQUIRED TO BRAZE TUBES OF VARIOUS SIZES MUST BE PROPORTIONAL TO THE SIZE OF THE TUBE. SERVICE PERSONNEL MUST USE THE APPROPRIATE HEAT LEVEL FOR THE SIZE OF THE TUBE BEING BRAZED.

7.4 Tubing Connections

An adjustable TXV with bulb is installed on the vapor tube from the factory.

1. Remove refrigerant tubing panel or coil access panel.
2. Remove red valve cap and depress the valve stem in access fitting to release pressure. No pressure indicates possible leak.
3. Replace the panel.
4. Remove the spin closure on both the liquid and suction tubes using a tubing cutter.
5. Insert liquid line set into liquid tube expansion and slide grommet about 18” away from braze joint.
6. Insert suction line set into suction tube expansion and slide insulation and grommet about 18” away from braze joint.

7. Braze joints. Braze joints should be made only with the connections provided external to the cabinet. Do not alter the cabinet nor braze inside the cabinet. Quench all brazed joints with water or a wet rag upon completion of brazing.
8. Ensure no wet rags or debris left inside cabinet before closing cabinet.
9. Ensure that the red cap is reinstalled on the access fitting and is hand-tight.

7.5 Standing Pressure Test (Recommended before vacuum)

Pressurize the system to the maximum allowable pressure listed in the serial plate using dry nitrogen or dry helium. Allow the pressure to stabilize and hold for at least 15 minutes. The system is considered leak-free if the pressure does not drop below the selected maximum allowable pressure. If, after 15 minutes, the pressure drops, it implies a leak in the system. Proceed with identifying and sealing the leak and repeating the Standing Pressure Test. Proceed to system evacuation using the Deep Vacuum Method. Leak test the system using dry nitrogen or dry helium and soapy water to identify leaks. NO REFRIGERANT SHALL BE USED FOR PRESSURE TESTING TO DETECT LEAKS. Proceed to system evacuation using the Deep Vacuum Method.

7.6 Deep Vacuum Method

The Deep Vacuum Method requires a vacuum pump rated for 500 microns or less. This method effectively and efficiently ensures the system is free of non-condensable air and moisture. The Triple Evacuation Method is detailed in the Service Manual for this product model as an alternative. To expedite the evacuation procedure, it is recommended that the Schrader Cores be removed from the service valves using a core-removal tool.

1. Connect the vacuum pump, micron gauge, and vacuum-rated hoses to both service valves. Evacuation must use both service valves to eliminate system mechanical seals.
2. Evacuate the system to less than 500 microns.
3. Isolate the pump from the system and hold the vacuum for 10 minutes (minimum). Typically, pressure will rise slowly during this period. If the pressure rises to less than 1000 microns and remains steady, the system is considered leak-free; proceed to system charging and startup.
4. If pressure rises above 1000 microns but holds steady below 2000 microns, non-condensable air or moisture may remain, or a small leak may be present. Return to step 2: If the same result is achieved, check for leaks and repair. Repeat the evacuation procedure.
5. If pressure rises above 2000 microns, a leak is present. Check for leaks and repair them. Then, repeat the evacuation procedure.

CAUTION

EXCESSIVE TORQUE CAN CAUSE THE TXV RETAINING RING TO WEAKEN & CREATE A LEAK. THIS WILL MAKE IT DIFFICULT TO RE-INSTALL. THE PROPER TORQUE SETTINGS SHOULD BE CONFIGURED AS BELOW WHEN ADJUSTING:
OILED EQUALIZER SHOULD BE SET TO 10-12 FT/LBS.
OUTLET AND INLET CHAT FITTING SHOULD BE SET TO 15-20 FT/LBS.

7.7 Leak detection methods

Under no circumstances shall potential sources of ignition be used in the searching for or detection of refrigerant leaks. A halide torch (or any other detector using a naked flame) shall not be used. If a leak is suspected, all naked flames shall be removed/extinguished. If a leakage of refrigerant is found which requires brazing, all of the refrigerant shall be recovered from the system, or isolated (by means of shut off valves) in a part of the system remote from the leak.

The following leak detection methods have been deemed acceptable, provided proper care is taken in their implementation:

1. A2L compatible electronic leak detectors rated for use with R-32 refrigerant. Ensure the detection equipment is calibrated in a refrigerant-free area and that the leak detector itself is not a potential source of ignition. Leak detection equipment shall be set at a value of no more than 0.075 kg/m^3(1.2 lb/ft^3).
2. Leak detection fluids - such as the bubble method or fluorescent method. Ensure that the use of detergents containing chlorine are avoided as the chlorine may react with the refrigerant and corroded the pipe-work.

8 Condensate Drain Lines

The coil drain pan has a primary and a secondary drain with ¾” NPT female connections. The connectors required are ¾” NPT male, either PVC or metal pipe, and should be hand tightened to a torque of no more than 37 in-lbs. to prevent damage to the drain pan connection. An insertion depth of approximately ⅜” to ½” (3-5 turns) should be expected at this torque.

1. Ensure drain pan hole is not obstructed.
2. To prevent potential sweating and dripping on to finished space, it may be necessary to insulate the condensate drain line located inside the building. Use Armaflex® or similar material.

A secondary condensate drain connection has been provided for areas where the building codes require it. Pitch all drain lines a minimum of ¼” per foot to provide free drainage. Provide required support to the drain line to prevent bowing.

If the secondary drain line is required, run the line separately from the primary drain and end it where condensate discharge can be easily seen.

NOTE: Water coming from secondary line means the coil primary drain is plugged and needs immediate attention.

CAUTION

IF SECONDARY DRAIN IS NOT INSTALLED, THE SECONDARY ACCESS MUST BE PLUGGED.

Insulate drain lines located inside the building or above a finished living space to prevent sweating. Install a condensate trap to ensure proper drainage.

NOTE: When units are installed above ceilings, or in other locations where damage from condensate overflow may occur, it is MANDATORY to install a field fabricated auxiliary drain pan under the coil cabinet enclosure.

The installation must include a “P” style trap that is located as close as is practical to the evaporator coil. See Figure 12 for details of a typical condensate line “P” trap.

NOTE: Units operating in high static pressure applications may require a deeper field constructed “P” style trap than is shown in Figure 15 to allow proper drainage and prevent condensate overflow.

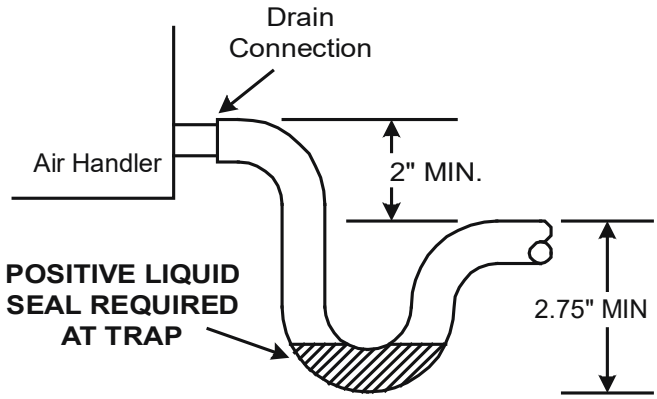

FIGURE 15

NOTE: Trapped lines are required by many local codes. In the absence of any prevailing local codes, please refer to the requirements listed in the Uniform Mechanical Building Code.

A drain trap in a draw-through application prevents air from being drawn back through the drain line during fan operation thus preventing condensate from draining, and if connected to a sewer line to prevent sewer gases from being drawn into the airstream during blower operation.

Use of a condensate removal pump is permitted when necessary. This condensate pump should have provisions for shutting off the control voltage should a blocked drain occur. A trap must be installed between the unit and the condensate pump.
IMPORTANT NOTE: The evaporator coil is fabricated with oils that may dissolve styrofoam and certain types of plastics. Therefore, a removal pump or float switch must not contain any of these materials.

Tip: Priming the “P” trap may avoid improper draining at the initial installation and at the beginning of the cooling season.

9 Ductwork

This air handler is designed for a complete supply and return ductwork system.

WARNING

ALL REQUIRED VENTILATION OPENINGS MUST BE CLEAR OF OBSTRUCTION AND ALL DUCTS CONNECTED TO THE APPLIANCE FREE OF POTENTIAL IGNITION SOURCES.

CAUTION

DO NOT OPERATE THIS PRODUCT WITHOUT ALL THE DUCTWORK ATTACHED.

To ensure correct system performance, the ductwork is to be sized to accommodate 350-450 CFM per ton of cooling with the static pressure not to exceed 0.5” in w.c. Refer to ACCA Manual D, Manual S and Manual RS for information on duct sizing and application. Flame retardant ductwork is to be used and sealed to the unit in a manner that will prevent leakage.

NOTE: A downflow application with electric heat must have an L-shaped sheet metal supply duct without any outlets or registers located directly below the heater.

9.1 Return Ductwork

Instructions for wiring to external zoning dampers and/or mechanical ventilation, if required to ensure that upon detection of a leak, the zoning dampers are driven fully open and additional mechanical ventilation is activated.

For appliances using R-32 REFRIGERANTS, connected via an air duct system to one or more rooms, the supply and return air shall be directly ducted to the space. Open areas such as false ceilings shall not be used as a return air duct.

For mechanical ventilation the air extraction opening from the room shall be located equal or below the refrigerant release point. For floor mounted units, it shall be as low as practicable. The air extraction openings shall be located in a sufficient distance from the air intake openings to prevent re-circulation to the space.

DO NOT LOCATE THE RETURN DUCTWORK IN AN AREA THAT CAN INTRODUCE TOXIC, OR OBJECTIONABLE FUMES/ODORS INTO THE DUCTWORK. The return ductwork is to be connected to the air handler bottom (upflow configuration).

10 Return Air Filters

NOTE: For AMVT24BP1300 only: If installing a filter, an external filter must be used when installing the unit in Horizontal Right, or if the side drain pan is not removed for Down Flow application. A filter will not fit on the internal filter rails in these applications.**

Each installation must include a return air filter. This filtering may be performed at the air handler using the factory filter rails or externally such as a return air filter grille. When using the factory filter rails, a nominal 16x20x1", 20x20x1" or 24x20x1" (actual dimension must be less than 23-½"x20") filter can be installed on a B, C and D cabinet respectively (the cabinet size is the seventh letter of the model number).

IMPORTANT NOTE: If appliance is equipped with Ultraviolet coil and air purifier, turn off the appliance before opening filter access door panel to change and install filter.

11 Electric Heat

Refer to the installation manual provided with the electric heat kit for the correct installation procedure. All electric heat must be field installed. Transformer must be detached during heater kit installation process. If installing this option, the ONLY heat kit that is permitted to be used is HKTS* series. Refer to the air handler unit's Serial and Rating plate or the HKTS* specification sheets to determine the heat kits compatible with a given air handler. No other accessory heat kit besides the HKTS* series may be installed in these air handlers.

The heating mode temperature rise is dependent upon the system airflow, the supply voltage, and the heat kit size (kW) selected. Use data provided in Tables 5, 6, and 7 to determine the temperature rise (°F).

NOTE: For installations not indicated above the following formula is to be used:

TR = (kW x 3412) x (Voltage Correction) / (1.08xCFM)

Where:	TR	=	Temperature Rise
	kW	=	Heater Kit Actual kW
	3412	=	Btu per kW
	VC*	=	.96 (230 Supply Volts)
		=	.92 (220 Supply Volts)
		=	.87 (208 Supply Volts)
	1.08	=	Constant
	CFM	=	Measured Airflow

*VC (Voltage Correction)

NOTE: The Temperature Rise Tables can also be used to estimate the air handler airflow delivery. When using these tables for this purpose set the room thermostat to maximum heat and allow the system to reach steady state conditions. Insert two thermometers, one in the return air and one in the supply air. The temperature rise is the supply air temperature minus the room air temperature. Using the temperature rise calculated, CFM can be estimated from the TR formula above. See Service Manual for more information.

CFM	HEAT KIT NOMINAL kW							
	3	5	6	8	10	15	19/20	25
800	12	19	23	31	37	56		
1000	9	15	19	25	30	44		
1200	8	12	15	21	25	37	49	62
1400	7	11	13	18	21	32	42	53
1600	6	9	12	15	19	28	37	46
1800	5	8	10	14	16	25	33	41
2000	5	7	9	12	15	22	30	37

230/1/60 SUPPLY VOLTAGE - TEMP. RISE °F
Table 6

CFM	HEAT KIT NOMINAL kW							
	3	5	6	8	10	15	19/20	25
800	11	18	22	30	35	54		
1000	9	14	18	24	28	42		
1200	7	12	15	20	24	35	47	56
1400	6	10	13	17	20	30	40	48
1600	6	9	11	15	18	27	35	42
1800	5	8	10	13	16	24	31	37
2000	4	7	9	12	14	21	28	33

220/1/60 SUPPLY VOLTAGE - TEMP. RISE °F
Table 7

CFM	HEAT KIT NOMINAL kW							
	3	5	6	8	10	15	19/20	25
800	10	17	21	28	33			
1000	8	13	17	22	27	40		
1200	7	11	14	19	22	33	45	56
1400	6	10	12	16	19	29	38	48
1600	5	8	10	14	17	25	33	42
1800	5	7	9	12	15	22	30	37
2000	4	7	8	11	13	20	27	33

208/1/60 SUPPLY VOLTAGE - TEMP. RISE °F
Table 8

Comfort Setting Menu Heater Kit Info

Comfort Setting Menu (CFS): There are 6 options available in the Comfort Setting Menu which impacts system target run time and electric heat functionality. Electric heat operation adjustments only apply if a communicating heat pump is installed. Comfort Setting Options 1 – 5 have set values for the System Target Runtime and option 6 enables additional menus to customize all comfort settings. See list below for the System Target Run times associated with the first 5 Comfort Settings. These first 5 options are setup to help satisfy the thermostat slower or faster based on the selection where option 1, with a 10 minute Target Runtime, is attempting to satisfy much faster than option 5, with a 30 minute Target Runtime.

System Target Runtime:
Comfort Setting Option 1) 10 Minute System Target Runtime
Comfort Setting Option 2) 15 Minute System Target Runtime
Comfort Setting Option 3) 20 Minute System Target Runtime
Comfort Setting Option 4) 25 Minute System Target Runtime
Comfort Setting Option 5) 30 Minute System Target Runtime

Electric Heat Adjustment: This system will automatically determine if the heat pump is capable of satisfying the thermostat in the selected System Target Runtime. If the heat pump is unable to satisfy in the selected time, electric heat settings will determine how many attempts should be given to the heat pump before temporarily locking it out and using the electric heat. These electric heat settings also determine at what time the system should remove the temporary heat pump lockout and run the heat pump again.

There are four adjustable settings associated with back up electric heat operation control. In the same way as the System Target Time, each of these items have defaulted values for Comfort Settings 1 – 5. Only when Comfort Setting 6 is selected will each item be available for full adjustment.

Model	HEATER KIT (Kw)								
	3	5	6	8	10	15	19	20	25
AMVT24BP13	550	650	700	800	850	875			
AMVT30BP13	550	650	700	800	875	1050			
AMVT36BP13	630	650	700	800	875	1050			
AMVT36CP13	630	735	810	925	1020	1145	1345		
AMVT42CP13		735	810	925	1020	1145	1345		
AMVT48CP13		880	880	1045	1200	1420	1480		
AMVT60DP13		1135	1265	1375	1455	1815		1860	1925

*Airflows shown are to be considered the absolute minimum allowable for the Air handler and Heat kit combination. The minimum airflow does not represent the recommended airflow by the manufacturer. When selecting a heater kit, the Minimum Blower Setting (M.B.S.) or speed tap listed on the unit's nameplate should be followed.

Minimum CFM Required for Heater Kits
Table 9

1. **Stage Up Percent (7 segment menu SUP):** This is a value that determines how far past the target runtime the system should continue running the heat pump before transitioning to the electric heat. For example, assume this menu was set to 20% with a target runtime of 20 minutes. If the thermostat did not remove the heating call after 20 minutes, the system would allow for an additional 20% heat pump run (20% of the 20 minute target is an additional 4 minutes). In this case, the system would turn on back up electric heat after 24 minutes if the thermostat call was still present. Each time this occurs, the system records this as a strike against the heat pump (the strike is important when looking at the Over Target Threshold).
2. **Over Target Threshold (7 segment menu Ott):** If the heat pump has consecutively activated back up electric heat for the selected Over Target Threshold amount of times, meaning for this many consecutive cycles it has been unable to satisfy the target time by itself, then the heat pump will be temporarily locked out and the electric heat will become the primary heat source.
3. **Stage Down Percent (7 segment menu SdP):** This only applies when the heat pump and back up electric heat are activated on initial start-up. In this case, the system will try to determine when the best time to operate the heat pump individually again. To determine this, the system looks at how easily the air handler is able to satisfy the thermostat using the heat pump with back up electric heat. Assume this setting is 15% and the target time is 20 minutes If the heat pump with back up electric heat can satisfy the thermostat in less than 17 minutes (20 minutes - 15% = 17 minutes) then the algorithm records a strike against the air handler (this strike is important when looking at the Under Target Threshold).
4. **Under Target Threshold (7 segment menu Utt):** If the air handler is able to satisfy the thermostat using the heat pump with back up electric heat for the selected number of consecutive cycles the electric heat operation will be temporarily removed. The heat pump will then be used during the next cycle. If the heat pump can satisfy the thermostat in less than the System Target Runtime the back up heat operation will be completely removed and the heat pump will become the primary heat source again. If it fails to do so, the strike count against the electric heat will be reset and the electric heat will remain the temporary primary heat source until the Under Target Threshold is reached again.

The system will automatically make adjustments in an attempt to satisfy the thermostat as close to this target runtime as possible. After a power cycle or mode change (cooling to heating or heating to cooling) the system will run full capacity for the selected mode during the first thermostat call. Based on the selected target runtime and how long the initial cycle takes to satisfy the thermostat, the control algorithm will adjust the system stage times for a 2 stage unit or the capacity demand percentage for an inverter / modulating unit for the next cycle. **NOTE**: actual run times may change depending on variations of load throughout the day.

The following table shows the default values for Comfort Setting Options (1 – 5):

Comfort Setting Option	Target Time (Minutes)	Stage Up Percentage (%)	Stage Down Percentage (%)	Over Target Threshold (Strike Count)	Under Target Threshold (Strike Count)
1	10	20	20	2	10
2	15	20	20	4	8
3	20	20	20	6	6
4	25	20	20	8	4
5	30	20	20	10	2

When comfort setting option 6 is selected, these setting become individually adjustable. The following table shows the ranges for each setting. The table shows the minimum value, the maximum value and the defaulted value. These settings can be adjusted up/down in increments of 1; which provides full flexibility.

NOTE: It is critical that these numbers be set properly. If Comfort Setting option 3 is desired but a target time of 60 is preferred, select Comfort Setting Option 6 to enable all the adjustable menus, set the Target Time to 60 and make sure the other menus are set to match that of Comfort Setting Option 3.

Menu	Minimum Value	Maximum Value	Default Value
Target Time (t9t)	1 minute	240 minutes	60 minutes
Stage Up Percent (SUP)	0%	100%	20%
Stage Down Percent (SdP)	0%	100%	20%
Over Target Threshold (Ott)	1 strike	254 strikes	20 strikes
Under Target Threshold (Utt)	1 strike	254 strikes	20 strikes

12 Electrical and Control Wiring

IMPORTANT: The appliance shall be installed in accordance with national wiring regulations such as the National Electric Code (NEC)/American National Standards Institute (ANSI)/National Fire Protection Association (NFPA) 70 and local/state codes. In Canada, electrical grounding is to be in accordance with the Canadian Electric Code (CSA) C22.1. All routing of electrical wiring must be made through provided electrical knockouts. Do not cut, puncture or alter the cabinet for electrical wiring.

WARNING

HIGH VOLTAGE
DISCONNECT ALL POWER BEFORE SERVICING OR INSTALLING THIS UNIT. MULTIPLE POWER SOURCES MAY BE PRESENT. FAILURE TO DO SO MAY CAUSE PROPERTY DAMAGE, PERSONAL INJURY OR DEATH.

WARNING

HIGH VOLTAGE!
TO AVOID PROPERTY DAMAGE, PERSONAL INJURY OR DEATH DUE TO ELECTRICAL SHOCK, THIS UNIT MUST HAVE AN UNINTERRUPTED, UNBROKEN ELECTRICAL GROUND. THE ELECTRICAL GROUND CIRCUIT MAY CONSIST OF AN APPROPRIATELY SIZED ELECTRICAL WIRE CONNECTING THE GROUND LUG IN THE UNIT CONTROL BOX TO THE BUILDING ELECTRICAL SERVICE PANEL.
OTHER METHODS OF GROUNDING ARE PERMITTED IF PERFORMED IN ACCORDANCE WITH THE NATIONAL ELECTRIC CODE (NEC)/AMERICAN NATIONAL STANDARDS INSTITUTE (ANSI)/NATIONAL FIRE PROTECTION ASSOCIATION (NFPA) 70 AND LOCAL/STATE CODES. IN CANADA, ELECTRICAL GROUNDING IS TO BE IN ACCORDANCE WITH THE CANADIAN ELECTRIC CODE (CSA) C22.1.

12.1 Building Electrical Service Inspection

DO NOT OPERATE THIS UNIT ON A THREE-PHASE POWER SUPPLY, ONLY A THREE-PHASE HEAT KIT CAN UTILIZE THREE-PHASE POWER. Measure the power supply to the unit. The supply voltage must be measured and be in agreement with the unit Serial & Rating plate power requirements and within the range shown.

12.2 Wire Sizing

Wire size is important to the operation of the equipment. Use the following check list when selecting the appropriate wire size for your unit.

- Wire used must carry the Minimum Circuit Ampacity (MCA) listed on the unit's Serial and Rating Plate.
- Refer to the NEC (USA) or CSA (Canada) for wire sizing. The unit MCA for the air handler and the optional electric heat kit can be found on the unit Serial and Rating Plate.
- Wire must be sized to allow no more than a 2% voltage drop from the building breaker/fuse panel to the unit.
- Wires with different insulation temperature rating have varying ampacities - be sure to check the temperature rating used

Refer to the latest edition of the National Electric Code or in Canada the Canadian Electric Code when determining the correct wire size.

12.3 Maximum Overcurrent Protection (MOP)

Every installation must include an NEC (USA) or CEC (Canada) approved over current protection device. Also, check with local or state codes for any special regional requirements.

Protection can be in the form of fusing or HACR style circuit breakers. The Serial and Rating Plate provides the maximum over current device permissible.

NOTE: Fuses or circuit breakers are to be sized larger than the equipment MCA but not to exceed the MOP.

Nominal Input	Minimum Voltage	Maximum Voltage
208/230 VAC	197	253

Electrical Voltage
Table 10

12.4 Electrical Connections – Supply Voltage

CAUTION

FIRE HAZARD!
TO AVOID THE RISK OF PROPERTY DAMAGE, PERSONAL INJURY OR FIRE, USE ONLY COPPER CONDUCTORS.

IMPORTANT NOTE: Use copper conductors only from disconnect or electrical panel to the air handler.

Knockouts are provided on the air handler top panel and sides of the cabinet to allow for the entry of the supply voltage conductors, as shown in Figure 16. Separate knockouts must be used for two circuit heat kits. Unless Single Point Wiring Kit (SPW-01) is used. If the knockouts on the cabinet sides are used for electrical conduit, an adapter ring must be used in order to meet UL 60335-2-40 safety requirements. An NEC or CEC approved strain relief is to be used at this entry point. Some codes/municipalities require the supply wire to be enclosed in conduit. Consult your local codes.

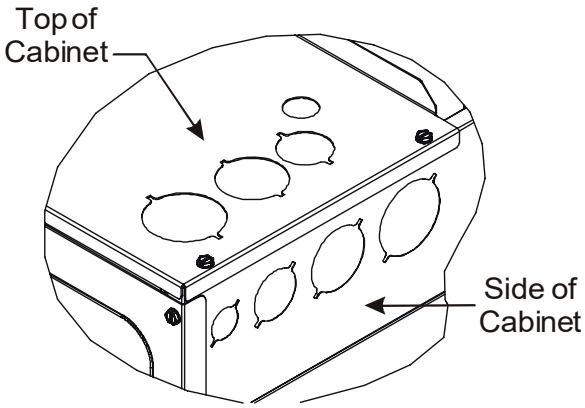

Knock-out for Electrical Connections
Figure 16

12.4.1 Air Handler Only (Non-Heat Kit Models)

IMPORTANT: Installation of Air Handler must follow any local codes/regulations. The manufacture recommends that when a heater kit is not installed, a field supplied disconnect switch or breaker should be installed in the electrical circuit that will allow power to be shut-off for service or maintenance.

The building supply connects to the stripped black and red wires contained in the air handler electrical compartment. A ground screw is also contained in this area. Attach the Supply wires to the air handler conductors as shown in the unit wiring diagram using appropriately sized solderless connectors or other NEC or CEC approved means.

12.4.2 Air Handler - Non-Circuit Breaker Heat Kits

A terminal block is provided with the HKTS* kit to attach the power supply and air handler connections. Follow the HKTS* Installation Manual and wiring diagram for complete wiring details.

12.4.3 Air Handler With Circuit Breaker Heat Kit

The air handler has a soft plastic cover which will only allow to access the heater kit circuit breaker. It does not allow to install or replace the circuit breaker. The circuit breakers have lugs for power supply connection. See the HKTS* Installation Instructions for further details.

12.5 Low Voltage Connections

Several combinations of low voltage schemes are possible, depending on the presence of a heat kit and whether the heat kit is single-stage or multi-stage, whether the outdoor section is an air conditioner or heat pump, and whether the outdoor section is single-stage or two-stage. The 24V-control voltage connects the air handler to the room thermostat and condenser. Low voltage wiring must be copper conductors. A minimum of 18AWG must be used for installations up to 100 feet. Low voltage wiring must be connected through the top of the cabinet or either side. See the “Thermostat Wiring” section of this manual for typical low voltage wiring connections.

12.5.1 Thermostats

Second-stage heat can be accomplished by a multi-stage heating thermostat or the addition of an outdoor thermostat as shown in wiring schematics on page 19. Follow the thermostat manufacturer’s instructions for installation.

12.6 Accessory Installations

For any and all accessories which may become a potential ignition source, they must be installed to our accessory control board. Ensure that any additional wiring from the Air Handler is done so as to protect from damage and wear on any joints which may need to be brazed or disconnected for service. If a zone control system is installed in the ductwork attached to this system, the zone controller must be powered through a accessory control kit to ensure that the zoning dampers open during mitigation mode.
Refer to the product specification sheet for the zoning and accessory control kit part number.

13 CoolCloud HVAC Phone Application

NOTE: This equipment has been tested and found to comply with the limits for a Class B digital device, pursuant to part 15 of the FCC Rules. These limits are designed to provide reasonable protection against harmful interference in a residential installation. This equipment generates, uses and can radiate radio frequency energy and, if not installed and used in accordance with the instructions, may cause harmful interference to radio communications. However, there is no guarantee that interference will not occur in a particular installation. If this equipment does cause harmful interference to radio or television reception, which can be determined by turning the equipment off and on, the user is encouraged to try to correct the interference by one or more of the following measures:

- Reorient or relocate the receiving antenna.
- Increase the separation between the equipment and receiver.
- Connect the equipment into an outlet on a circuit different from that to which the receiver is connected.
- Consult the dealer or an experienced radio/ TV technician for help.

Actual screens may look different based on the mobile device being used.

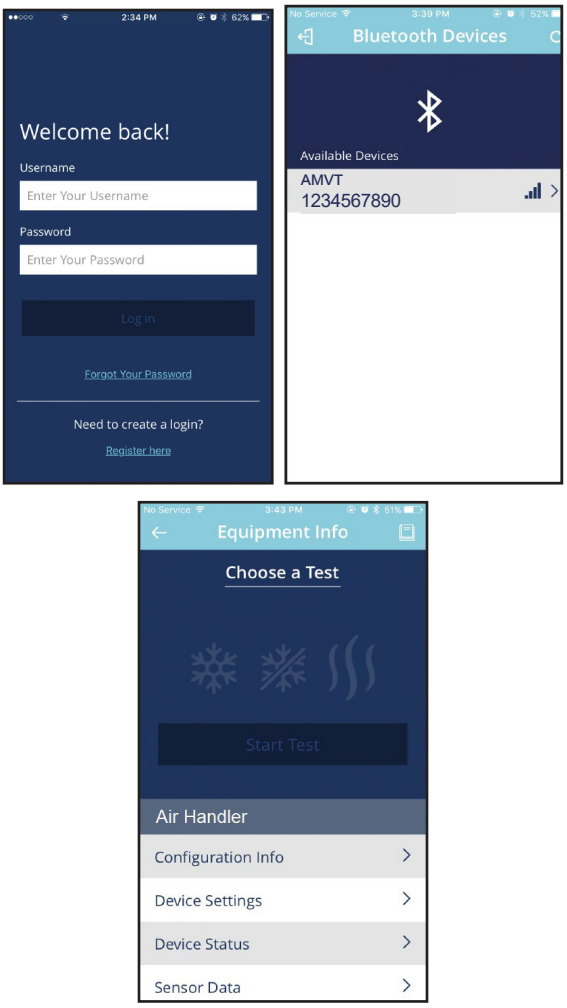

Figure 17

This air handler is Bluetooth® ready and functions with the CoolCloud HVAC phone application designed to improve the contractor's setup / diagnostic experience. Users can see specific model information, review active diagnostic error codes, observe system menu testing of all operational modes (heat / cool / fan) directly from the phone. The phone application is also capable of directly updating the air handler software anytime updates are available. The application will automatically notify the user.

The Bluetooth® word mark and logos are registered trademarks owned by Bluetooth SIG, Inc., and any use of such marks are under license.

NOTE: The software update may take up to 20 minutes to complete.

14 Quick Start Guide for Communication Outdoor Units

EXTREMELY IMPORTANT: For all cooling calls the system only requires a single Y input from the thermostat. For all heating calls (including applications with backup electric heater kits) the system only requires a single W input from the thermostat. Internal algorithms will control all available cooling and heating stages based on these inputs. Any single-stage 24VAC thermostat can be used. For proper operation, the thermostat must be setup to control a single stage AC outdoor unit and to control single stage electric heat operation. The control board does not accommodate an O wire thermostat input (reversing valve signal). If a heat pump is installed, the thermostat should be setup as stated above. Setting the thermostat for the heat pump control or multistage control may result in incorrect performance.

1. Connect all necessary thermostat wires to the thermostat connector on the air handler control as instructed by the applicable wiring diagrams shown in this section.
2. Connect the 1 & 2 wires between the indoor and outdoor unit for communicating operation.
   NOTE: Verify two stage outdoor units include a 24VAC transformer (for outdoor control board power). Two stage outdoor units may not behave properly without this 24 VAC transformer.

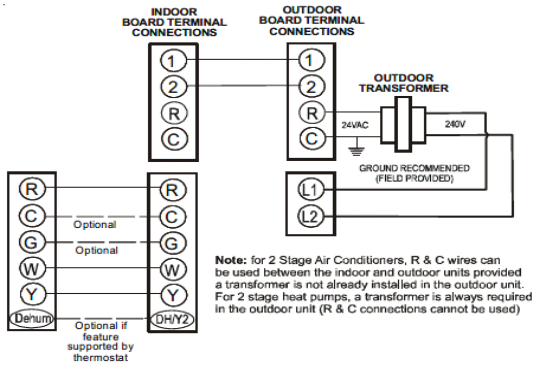

Communicating Two-Stage Air Conditioner or Heat Pump
Figure 18

3. Download the Cool Cloud HVAC phone application for charging and to configure / test system.

NOTE: When new versions of Bluetooth Communication Software and Air Handler Control Software are available, the phone application notifies the user. Software updates are classified as either optional or mandatory and installed by using the phone application. Ensure that all mandatory software updates are installed.

14.1 Charging

1. Two-stage outdoor units using the Cool Cloud HVAC application:
   a. Using the cooling icon after entering the outdoor unit menus, energize the outdoor unit at 49% capacity or lower.
   b. Charge the outdoor unit as required using the charging information provided with the outdoor equipment.

15 Quick Start Guide for Non-Communicating Outdoor Units

When setting up a ComfortBridge air handler for use with a Non-Communicating outdoor unit you must set airflow in the "ton" menu on the PCB or in the CoolCloud HVAC APP. Failure to do so will result in the air handler PCB displaying "IdL" and the blower will not operate with a call for cooling. The Board does not need to be replaced, you MUST set the airflow first.

EXTREMELY IMPORTANT: For two stage electric heat kit control the system only needs a single W input. Internal algorithms will control staging automatically based on the single W input. For non-communicating outdoor unit wiring, see instructions below:

1. Use the wiring diagrams on the next page to connect low voltage thermostat wires.
   NOTE: When installing the air handler with a non-communicating heat pump, wire directly to the "O" terminal on the non-communicating heat pump. See the following figures.

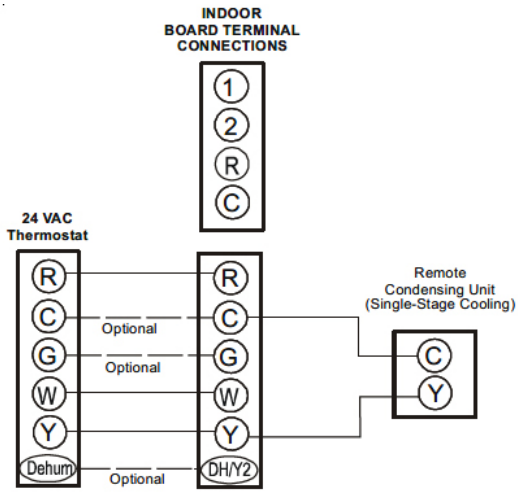

Non-communicating Single Stage A/C
Figure 19

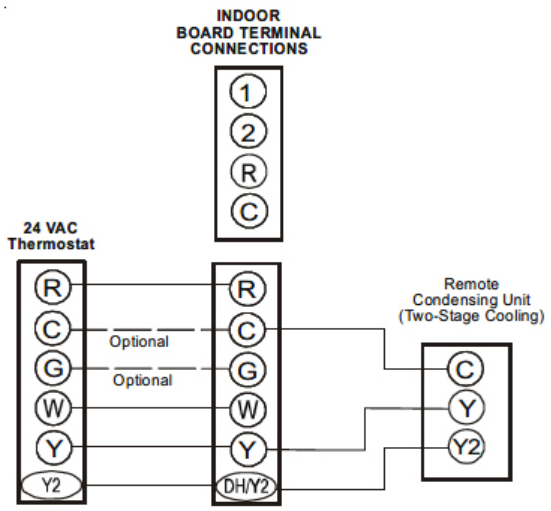

Non-Communicating Two-Stage A/C
Figure 20

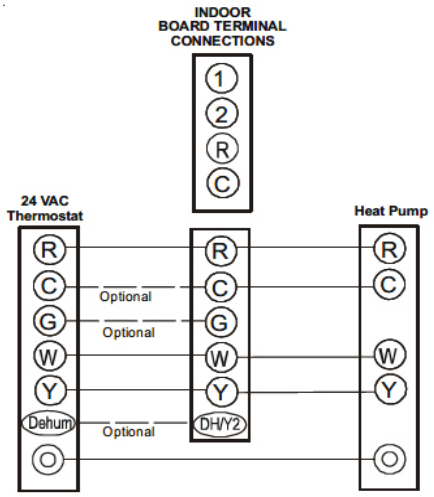

Non-Communicating Single Stage Heat Pump
Figure 21

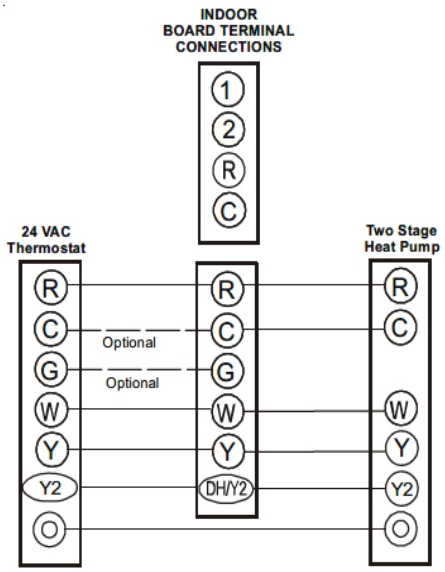

Non-Communicating Two Stage Heat Pump
Figure 22

2. Download the Cool Cloud HVAC phone application.
   NOTE: When new versions of Bluetooth Communication Software and Air Handler Control Software are available, the phone application notifies the user. Software updates are classified as either optional or mandatory and installed by using the phone application. Ensure all mandatory software updates have been installed. Review notes for optional software updates and install if necessary.
3. Go to the Non-Comm Outdoor Setting Menu (Od5) using the on board push buttons or the Cool Cloud HVAC phone application. Select " 1AC" for single stage Air Conditioners, " 1HP" for single stage Heat Pumps, "2AC" for two stage Air Conditioners and "2HP" for 2 stage Heat Pumps.
4. Go to the Tonnage Units Menu (ton) and select the tonnage value that corresponds to the desired airflow for the outdoor unit. See the following table.
   NOTE: For the two stage non-communicating outdoor units, system will stage airflow automatically for low stage operation.

Tonnage Selection	Airflow	Tonnage Selection	Airflow	Tonnage Selection	Airflow	Tonnage Selection	Airflow
1	400	2.3	920	3.6	1440	4.9	1960
1.1	440	2.4	960	3.7	1480	5	2000
1.2	480	2.5	1000	3.8	1520	5.1	2040
1.3	520	2.6	1040	3.9	1560	5.2	2080
1.4	560	2.7	1080	4	1600	5.3	2120
1.5	600	2.8	1120	4.1	1640	5.4	2160
1.6	640	2.9	1160	4.2	1680	5.5	2200
1.7	680	3	1200	4.3	1720	5.6	2240
1.8	720	3.1	1240	4.4	1760	5.7	2280
1.9	760	3.2	1280	4.5	1800	5.8	2320
2	800	3.3	1320	4.6	1840	5.9	2360
2.1	840	3.4	1360	4.7	1880	6	2400
2.2	880	3.5	1440	4.8	1920		

Table 11

NOTE: The system will not provide airflows above the max Airflow Value.

NOTE:

1. Airflow data indicated is at 230V without air filter in place.
2. The cooling/heat pump speed tap should be selected based on the AHRI rating. Otherwise, select a speed tap that provides a minimum 350 CFM per outdoor ton. For satisfactory operation, external static pressure must not exceed 0.5" WC.
   EXAMPLE: For a 2 ton outdoor, 1.6T 10% trim is the lowest valid speed for AMVT24BP1300 (704 SCFM at 0.5" WC).

	Outdoor Unit Tonnage						
	1.5	2	2.5	3	3.5	4	5
Minimum Cooling/Heating CFM @ .5" WC ESP	525	700	875	1050	1225	1400	1750

Table 12

3. Use the CFM adjustment factors of 0.98 for horizontal left and 0.96 for horizontal right and downflow orientations.
4. It is the installer's responsibility to verify that actuation of mitigation procedures are operational with minimum required airflow according to the minimum mitigation airflow chart (Refer to table 17).

Model	Max CFM
AMVT24BP1300	1275
AMVT30BP1300	1275
AMVT36BP1300	1450
AMVT36CP1300	1575
AMVT42CP1300	1575
AMVT48CP1300	1700
AMVT60DP1300	2200

Table 13

5. Use the Cool Cloud HVAC phone application to configure/test **air handler** operations.

NOTE: The phone application cannot test a non-communicating outdoor unit. The thermostat will be required for outdoor unit testing.

15.1 Electric Heater Kit Testing

1. Select the electric heat icon after entering the air handler menus while using the Cool Cloud phone application.
2. Select any value less than 50% for low stage operation and any value greater than 50% for high stage operation.
3. Confirm thermostat heating and cooling calls function properly for high stage operation.

MODEL NAME	MAX CFM
AMVT24BP1300	1275
AMVT30BP1300	1450
AMVT36BP1300	
AMVT36CP1300	1575
AMVT42CP1300	
AMVT48CP1300	1700
AMVT60DP1300	2200

Table 14

16 Dehumidification

Dehumidification allows the air handler's circulator blower to operate at a reduced speed during a combined thermostat call for cooling and a dehumidification call from the thermostat or humidistat. This lower blower speed increases dehumidification of the conditioned air as it passes through the indoor coil. The control board is equipped with a 24 volt dehumidification input (DH) located on the thermostat wiring connector. The terminal can be configured to enable dehumidification when the input is energized or de-energized. When using an external dehumidistat, connect it between the R and DH terminals. If the humidistat closes on humidity rise or the thermostat energizes this terminal when dehumidification is required, set the control board Dehum Logic Menu (dHL) to "HI " using the push buttons or Cool Cloud HVAC phone application. If the humidistat opens on humidity or the thermostat de-energizes this terminal when dehumidification is required, set the Dehum Logic Menu to "Lo" using the push buttons or Cool Cloud HVAC phone application.

17 Auxiliary Alarm Switch

The control is equipped with a 24VAC Aux Alarm to be used for a condensate switch install (designated by CONDENSATE IN/OUT on the control). By default, the connected AUX switch is normally closed and opens when the water level in the evaporator coil base pan reaches an undesirable level. The control responds by displaying a "EOF" error code and turning off the outdoor condensing unit. If the AUX switch is detected to be in the closed position for 30 seconds, normal operation resumes and the error message is no longer displayed.

18 Start-Up Procedure

WARNING

HIGH VOLTAGE
DISCONNECT ALL POWER BEFORE SERVICING OR INSTALLING THIS UNIT. MULTIPLE POWER SOURCES MAY BE PRESENT. FAILURE TO DO SO MAY CAUSE PROPERTY DAMAGE, PERSONAL INJURY OR DEATH.

- Prior to start-up, ensure that all electrical wires are properly sized and all connections are properly tightened.
- All panels must be in place and secured. For Air Tight application, gasket must be positioned at prescribed locations to achieve 1.4% leakage.
- Tubing must be leak free.
- Condensate line must be trapped and pitched to allow for drainage.
- Low voltage wiring is properly connected.
- Auxiliary drain is installed when necessary and pitched to allow for drainage.
- Unit is protected from vehicular or other physical damage.

Return air is not obtained from, nor are there any return air duct joints that are unsealed in, areas where there may be objectionable odors, flammable vapors or products of combustion such as carbon monoxide (CO), which may cause serious personal injury or death.

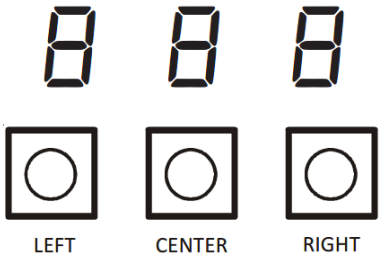

Figure 23

The air handler includes three on-board push buttons allowing users to navigate indoor and outdoor system menus. The Right and Left buttons allow the user to scroll through the main menus and to then scroll through available options within specific menus. The Center button is used to enter into a main menu and to then permanently select options within those menus.

NOTE: After scrolling to the desired option within a menu, that option may be flashing on the 7-segment displays. This indicates the option has not been officially selected. Pressing the Center button two times will select that option. The first press will stop the flashing. The second will make the selection official and return you to the main menu.

18.1 Thermal Expansion Valve System Adjustment

In addition to conventional charging procedures, the following requirements shall be followed:

1. Ensure that contamination of different refrigerant does not occur when using charging equipment. Hoses or lines shall be as short as possible to minimize the amount of refrigerant contained in them.
2. R-32 Refrigerant Cylinders shall be kept in an appropriate position.
3. Ensure that the refrigeration system is grounded prior to charging the system with refrigerant.
4. Label the system when charging is complete (if not already).
5. Extreme care shall be taken not to overfill the refrigerating system.

The following information for the indoor unit should be verified before attempting to charge system or adjust TXV if necessary.

1. Total static pressure is .5” WC or less.
2. Airflow is correct for installed unit
3. Airflow tables are in the installation manual and Specification Sheet for Indoor Unit.
4. Complete airflow tables and charging information are in Service Manual.
5. The outdoor temperature must be 60°F or higher.
6. Set the room thermostat to COOL, fan switch to AUTO
7. Set the temperature control well below room temperature.

Superheat adjustments should not be made until indoor ambient conditions have stabilized. This could take up to **24 hours** depending on indoor temperature and humidity. Before checking superheat run the unit in cooling for 10 minutes or until refrigerant pressures stabilize. Use the following guidelines and methods to check unit operation and ensure that the refrigerant charge is within limits.
NOTE: Charge two stage units on low stage.

1. Purge gauge lines. Connect service gauge manifold to base-valve service ports.
2. Temporarily install a thermometer on the liquid line at the liquid line service valve and 4-6” from the compressor on the suction line. Ensure the thermometer makes adequate contact and is insulated for best possible readings. Use liquid line temperature to determine subcooling and vapor temperature to determine superheat.
3. If subcooling and superheat are low, adjust TXV superheat, then check subcooling as specified in Outdoor Installation and Instruction manual.
   a. If subcooling is low and superheat is high, add charge to raise subcooling to 8°F +/- 1°F, then check superheat.
   b. If subcooling and superheat are high, adjust TXV superheat, then check subcooling as specified in Outdoor Installation and Instruction manual.

For optimum system performance subcool and superheat should be matched as specified in Outdoor Installation and Instruction manual. Outdoor should be matched with approved AHRI combination, other approved system shall have subcooling set to 8°F +/- 1°F and superheat set to 12°F +/- 1°F,

CAUTION

EXCESSIVE TORQUE CAN CAUSE THE TXV RETAINING RING TO WEAKEN & CREATE A LEAK. THIS WILL MAKE IT DIFFICULT TO RE-INSTALL. THE PROPER TORQUE SETTINGS SHOULD BE CONFIGURED AS BELOW WHEN ADJUSTING: OILED EQUALIZER SHOULD BE SET TO 10-12 FT/LBS. OUTLET AND INLET CHAT FITTING SHOULD BE SET TO 15-20FT/LBS.

Superheat Adjustments (Only if necessary)

1. Attach a pipe clamp thermometer near the suction line service valve at the outdoor unit.
   a. Ensure the thermometer makes adequate contact for the best possible readings.
2. Adjust Superheat by turning the TXV valve stem clockwise to **increase** and **counterclockwise** to **decrease**. Adjustments should be made opening or closing the valve by no more than ¼ turn at a time. Allow the system to stabilize 15 to 20 minutes before making additional adjustments if necessary.

3. After adjustments are complete replace cap on adjustment stem and tighten 1/6 turn.
4. Remove gauges and check the Schrader ports for leaks and tighten valve cores if necessary. Install caps finger tight.

NOTE: In situations where the TXV must be removed and replaced or re-installed into the system, the TXV should be hand tightened first and then apply a half turn to fully set the TXV. No more than 20 ft-lb torque should be applied to the joints of the TXV.

SATURATED SUCTION PRESSURE TEMPERATURE CHART	
SUCTION PRESSURE	SATURATED SUCTION
PSIG	R-32
50	1
52	3
54	4
56	6
58	7
60	8
62	10
64	11
66	13
68	14
70	15
72	16
74	17
76	19
78	20
80	21
85	24
90	26
95	29
100	31
110	36
120	41
130	45
140	49
150	53
160	56
170	60

Table 15

SUBCOOL FORMULA =
SAT. LIQUID LINE TEMP. - LIQUID LINE TEMP.

SUPERHEAT FORMULA =
SUCT. LINE TEMP. - SAT. SUCT. TEMP.

SATURATED LIQUID PRESSURE TEMPERATURE CHART	
LIQUID PRESSURE	SATURATED LIQUID TEMPERATURE °F
PSIG	R-32
200	70
210	73
220	76
225	78
235	80
245	83
255	85
265	88
275	90
285	92
295	95
305	97
325	101
355	108
375	112
405	118
415	119
425	121
435	123
445	125
475	130
500	134
525	138
550	142
575	145
600	149
625	152

Table 16

19 Accessory Control (Humidifiers, Dehumidifiers, Ventilators)

If an external humidifier, dehumidifier or ventilator is installed, it may require airflow from the HVAC system to function properly.

1. Make sure the installed 24VAC thermostat is capable of controlling the accessory or accessories.
2. Connect the appropriate accessory control wires to the accessory devices from the thermostat (see thermostat manual for connection and setup instructions).
3. If the thermostat is capable of providing a continuous fan call (G signal) during accessory operation: Make sure to connect the thermostat G terminal to the G terminal on the indoor unit. Setup thermostat to ensure G signal is energized during accessory operation.

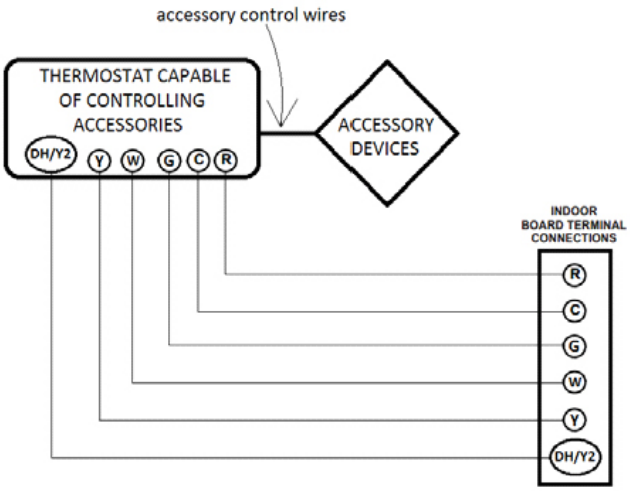

Figure 24

4. Select the appropriate fan only airflow for the accessory using the indoor unit push button menus or the Cool Cloud HVAC phone application.
5. Using the thermostat, independently test each accessory in addition to the independently testing continuous fan mode.

20 Ramping Profiles

The variable-speed circulator offers four different ramping profiles. These profiles may be used to enhance cooling performance and increase comfort level. Select the desired ramping profile using the Cool Cloud phone application or the push button menus.

- Profile A provides only an OFF delay of one (1) minute at 100% of the cooling demand airflow.

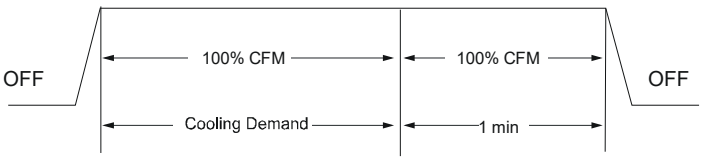

- Profile B ramps up to full cooling demand airflow by first stepping up to 50% of the full demand for 30 seconds. The motor then ramps to 100% of the required airflow. A one (1) minute OFF delay at 100% of the cooling airflow.

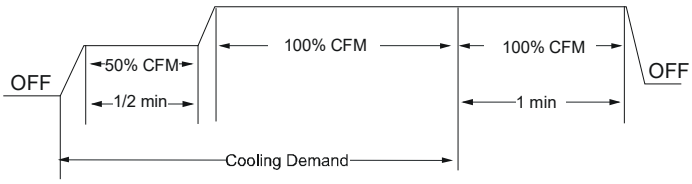

- Profile C ramps up to 82% of the full cooling demand airflow and operates there for approximately 7 ½ minutes. The motor then steps up to the full demand airflow. Profile C also has a one (1) minute 100% OFF delay.

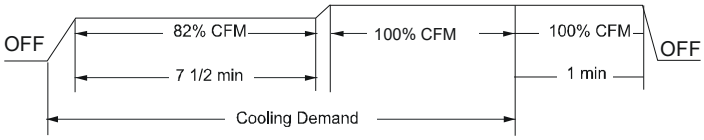

- Profile D ramps up to 50% of the demand for ½ minute, then ramps to 82% of the full cooling demand airflow and operates there for approximately 7 ½ minutes. The motor then steps up to the full demand airflow. Profile D has a ½ minute at 50% airflow OFF delay.

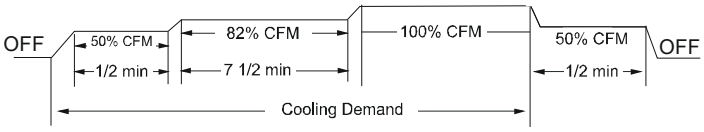

Figure 25

21 Achieving 1.4% Low Leakage Rate

Ensure all the gaskets remain intact on all surfaces as shipped with the unit. These surfaces are areas between the upper tie plate and blower access panel, blower access and coil access panels, and between the coil access and filter access panels. Ensure upon installation, that the plastic breaker cover is sitting flush on the blower access panel and all access panels are flush with each other and the cabinet. With these requirements satisfied, the unit achieves less than 1.4% airflow leakage when tested in accordance with ASHRAE Standard 193.

22 Regular Maintenance

22.1 Circulating Air Filters

Circulating Air filters should be maintained on a regular basis by the user is the circulating air filter(s). Filter should be cleaned or replaced regularly, typically once per month. A certified service technician must perform all other services.

IMPORTANT NOTE: If thumb screws are used to access the filter, ensure the washer installed on the screw behind the access panel remains in place after re-installation.

22.2 Refrigeration Detection System (RDS)

Function: Refrigerant Detection System (RDS) is installed in this equipment to detect any R-32 leakage from the coil and take action to mitigate any risk of ignition/ fire.

Operation: When refrigerant is detected, the RDS shall send signals for the unit to perform these actions:

1. Turn off heating and cooling operation
2. Turn on the blower for air circulation.

The mitigation mode takes about 5 minutes to complete after which it will resume normal operation. The minimum mitigation airflow table provides the required airflow and the minimum room area (In this case, the room area refers to the total conditioned airspace. Refer to Table 17 & 19 to disperse the refrigerant without causing a potential fire hazard in presence of ignition sources).

Servicing: Before servicing identify the Mode of operation of the system by reading the LED flashing pattern on the PCB which can be seen through the round glass view on top access panel and matching the LED flashing pattern with mode of operation in A2L PCB fault code label which is attached on the front side of the blower access panel (Figure 26). After identifying the mode of operation take recommended actions as specified in Table 18.

Instruction to replace A2L PCB: Take off the blower access panel, disconnect the PCB harness and R-32 sensor wire connected to the PCB, detach the PCB from the 4 plastic standoffs, install new PCB on 4 plastic standoffs which is installed on metal bracket, re-connect the PCB harness and R-32 sensor wire to the new PCB per wiring instruction as attached to the equipment, reassemble the blower access panel to the unit.

Instruction to replace R-32 sensor: Take off the blower access panel and coil access panel, take off the drain port gasket on the drain pan in front of the sensor bracket, disconnect the R-32 sensor wire from the A2L PCB, take off sensor bracket assembly from the drain pan, remove plastic push pins and R-32 sensor off the sensor bracket, install new R-32 sensor and plastic push pins to sensor bracket, re-install A2L sensor bracket assembly to the drain port correctly as shown in the figures 5, 6, 7 and 8.
The “FRONT” print on sensor bracket should be facing away from the equipment, place gaskets back to the drain ports correctly. The “FRONT” print on the gaskets should be in the front facing away from the equipment, reassemble the blower access panel and coil access panel to the unit.

Serial Plate Information: The installer must write the maximum possible refrigerant charge and the minimum room area on serial plate. Use Table 17 to determine the maximum possible refrigerant charge and minimum (air conditioned) room area based on the total system refrigerant charge. If the installer is not at sea level, consult section 6.5 to determine how to adjust the minimum (air conditioned) room area. Use a durable marking instrument to write the values on the serial plate.
The installers are responsible for verifying that mitigation procedures are operational with the minimum required mitigation airflow (Refer to Table 11).

IMPORTANT NOTE: The R-32 Sensor shall only be replaced with sensors specified by the appliance manufacturer.

(Sensor replacement part can be determined through the homeowner support line provided earlier in this document.)

Minimum Mitigation Airflow Chart

Total System Refrigerant Charge (oz)	Maximum Possible Refrigerant Charge (oz)	Maximum Possible Refrigerant Charge (kg)	Minimum Air Conditioned Room Area (ft2)	Minimum Air Conditioned Room Area (m2)	Minimum Required Mitigation Airflow (CFM)	Minimum Required Mitigation Airflow (m3/hr)
31~50	50	1.42	46	4.22	83	140
51~100	100	2.84	91	8.44	165	279
101~150	150	4.26	137	12.66	247	418
151~200	200	5.67	182	16.85	328	556
201~250	250	7.09	227	21.07	410	696
251~300	300	8.51	273	25.29	492	835
301~350	350	9.93	318	29.51	574	974
351~400	400	11.34	363	33.69	655	1112
401~450	450	12.76	409	37.91	737	1251
451~500	500	14.18	454	42.13	819	1391
501~550	550	15.60	499	46.35	901	1530
551~600	600	17.01	545	50.54	982	1668

Table 17

LEAK DETECTION SYSTEM INSTALLED. UNIT MUST BE POWERED EXCEPT FOR SERVICE.	
RED LED'S STATUS (REFER I/O FOR RECOMMENDED ACTION)	
MODE	LED FLASHING PATTERN
NORMAL OPERATION	SLOW LED FLASHING PATTERN (2 SECONDS ON 2 SECONDS OFF)
R-32 LEAK ALARM*	FAST LED FLASHING PATTERN
DELAY MODE	LED WILL BE ON CONTINUOUSLY
SYSTEM VERFICATION MODE	SAME AS R32 LEAK ALARM MODE
CONTROL BOARD INTERNAL FAULT	LED WILL FLASH 2 TIMES AND THEN BE OFF FOR 5 SECONDS
R32 SENSOR COMMUNICATION FAULT	LED WILL FLASH 3 TIMES AND THEN BE OFF FOR 5 SECONDS
R32 SENSOR FAULT	LED WILL FLASH 4 TIMES AND THEN BE OFF FOR 5 SECONDS
*IF R-32 LEAK ALARM IS OBSERVED, DO NOT OPEN THE UNIT OR TURN IT OFF.	0140A01138-B

A2L PCB FAULT CODE

FIGURE 26

	service indicator; read technical manual
	operator's manual; operating instructions
	warning; flammable materials
	UN GHS flame symbol

FIGURE 27

23 Air Handler Troubleshooting Matrix

Symptoms of Abnormal Operation	Diagnostic / Status LED Codes	Fault Description	Possible Causes	Corrective Actions
No outdoor unit operations	EC1	Communication error with outdoor unit	Improper low voltage wiring between the indoor and outdoor unit Outdoor control board lost power duirng operation	Locate and correct improper low voltage wiring issue Identify reason outdoor control board lost power during operation
No Air Handler operation	E05	Open fuse	Short in low voltage wiring	Locate and correct short in low voltage wiring Replace fuse with 3-amp automotive type
No Air Handler operation	E0F	Auxiliary switch (condensate switch) open or open fuse	High water level in the evaporation coil or short in low voltage wiring	Check evaporator drain pan, trap, piping Replace fuse with 3-amp automotive type
No Air Handler operation	Ed0	Data not yet on network	No network data	Populate shared data set using memory card
No Air Handler operation	Ed1	Invalid memory card data	Air Handler blower does not contain an appropriate shared data set	Populate correct shared data using memory card
Operation different than expected or no open	Ed4	Invalid memory card data	Shared data set on memory card has been rejected by integrated control module	Verify shared data set is correct for the specifc model. Re-populate data using correct memory card if required
No Air Handler operation	Eb0	Blower motor not running with demand present	Loose or disconnected wiring connection at motor power leads Open circuit in inductor or loose wiring connection at inductor (3/4 Hp and 1 Hp models only) Failed blower motor	Tighten or correct wiring connection Verify continuous circuit through inductor. Replace if open or short circuit Check blower motor
No Air Handler operation	Eb1	Integrated control module has lost communications with blower motor	Loose wiring connection at circulator motor control leads Failed blower motor Failed integrated control module	Tighten or correct wiring connection Check blower motor, replace if necessary Check integrated control module, replace if necessary
No Air Handler operation	Eb2	Blower motor horse power in shared data set does not match blower motor horse power	Incorrect blower motor in Air Handler Incorrect shared data set in integrated control module	Verify blower if motor horse power is the same specified for the specific Air Handler model, replace if necessary Verify shared data set is correct for the specific model, re-populate data using correct memory card if required
Air Handler operates at reduced performance Airflow delivered is less than expected	Eb3	Blower motor is operating in a power, temperature, or speed limiting condition	Blocked filters Restrictive or undersized ductwork High ambient temperatures	Check filters for blockage, clean flters or remove obstruction Check ductwork for blockage, remove obstruction and verify all registers are fully open Verify ductwork is appropriately sized for system and resize/replace as needed

Table 18

24 Air Handler Troubleshooting Matrix (continued)

Symptoms of Abnormal Operation	Diagnostic / Status LED Codes	Fault Description	Possible Causes	Corrective Actions
No Air Handler operation	E64	Blower motor senses a loss of rotor control Blower motor senses high current	Abnormal motor loading, sudden change in speed or torque, sudden blockage of air handler air inlet or outlet	Check filters, filter grills/registers, duct system and air handler inlet/outlet for blockages
No Air Handler operation	E65	Blower motor fails to start 10 consecutive times	Obstruction in blower housing Seized blower motor bearings Failed blower motor	Check blower for obstructions Remove and repair/replace wheel/motor if necessary Check blower motor shaft rotation and motor, replace motor if necessary
No Air Handler operation	E66	Blower motor shuts down for over or under voltage condition Blower motor shuts down due to over temperature condition on power module	High or low AC line voltage to air handler High ambient temperatures	Check power to air handler Verify line voltage is within the range specified on the rating plate
No Air Handler operation	E67	Blower motor does not have enough information to operate properly Motor fails to start 40 consecutive times	Error with integrated control module shared data	Verify control is populated with the correct shared data
Air Handler operates at reduced performance or operates on low stage when high stage is expected	E69	Airflow is lower than demanded	Blocked filters or restrictive ductwork Undersized ductwork	Check filters for blockage, clean filters or remove obstruction Check ductwork for blockage, remove obstruction and verify all registers are fully open Verify ductwork is appropriately sized for system, resize/replace ductwork if necessary

CONTINUE TABLE 18

25 Air Handler Display

LED Display	Menu Description
LGF	View 6 most recent fault codes and Clear Fault Codes if desired (furnace)
Lrn	Restart communications between the indoor and outdoor unit.
Cr	Control Firmware Revision Number
Sr	Control Shared Data Revision Number
FSd	Constant Fan Speed as percent of maximum airflow. Default = 30%
EHt	Electric Heater Kit Wattage (kW)
EFd	Electric Heat Off Delay (seconds)
End	Electric Heat On Delay (seconds)
EtF	Electric Heat Airflow Trim (percentage)
ESt	Percentage of high stage electric heating airflow to run during low stage electric heat operation
CFS	1 = system will try to satisfy the thermostat quickly. 5 (default) = system will try to satisfy the thermostat more slowly.
dHL	Select "Hi " to enable dehumidification when the thermostat DH terminal is energized. Select "Lo" to enable dehumidification when the thermostat DH terminal is de-energized. (default = Hi)
OdS	Select number of stages for the non-communicating outdoor unit. (1AC for single-stage Air Conditioners, 1HP for single stage Heat Pumps, 2AC for two stage Air Conditioners or 2HP for two stage heat pumps)
ton	Indoor Airflow for non-communicating outdoor units. (values based on 400CFM per ton) (default = 3.0 Ton)
CtF	Cooling Airflow Trim (default 0%)
CAP	Cooling Airflow Profile setting (default = profile D shown as 4)
Cnd	Cooling Airflow On Delay Time (default = 5 seconds)
CFd	Cooling Airflow Off Delay Time. (default = 60 seconds)
CSt	Percentage of high stage cooling airflow to run during low stage operation. (default = 70%)
dHS	Electric heat operation during defrost. 1 = low stage 2 (default) = high stage
HtF	Heat Pump Indoor Airflow Trim (default = 0%)
HFd	Heat Pump Heating Airflow Off Delay Time (default = 60 seconds)
Hnd	Heat Pump Heating Airflow On Delay Time (default = 5 seconds)
HSt	Percentage of high stage heat pump heating airflow to run during low stage operation. (default = 70%)
EHA	When heat pump heating and electric heat are running at the same time, this percentage is used for additional airflow trim
dHE	Enables or disables dehumidification feature in the outdoor unit. (default = Enabled)
CbP	Balance point temperature. The Compressor will not operate below temperature. (Default = 0°F)
EbP	Backup Heat Balance Points
Hdl	Compressor run time between defrost cycles. (default = 30 minutes) (2 stage units)
CdL	Compressor off delay at the beginning and end of a defrost cycle. (default = 30 seconds)

25 Air Handler Display (Continued)

LED Display	Menu Description
FCL	View 6 most recent fault codes and Clear Fault Codes if desired (outdoor communicating units)
t9t	Menu is enabled if the CFS menu is set to 6. Select the target time the system will attempt to satisfy the thermostat.
SUP	Menu is enabled if the CFS menu is set to 6. Select the percentage past the target time when the system will enable electric heat operation during heat mode.
Ott	Menu is enabled if the CFS is set to 6. (Electric heat will run during the next heat call if the heat pump fails to satisfy the custom target time for this number of consecutive cycles) (default = 20 cycles)
utt	Menu is enabled if the CFS menu is set to 6. (if the addition of low stage electric heat is able to consecutively satisfy the thermostat under the set target time for this number of cycles, the system will transition to the heat pump for primary heating)
SdP	Menu is enabled if the CFS menu is set to 6. (this percentage will help determine when switching back to heat pump only operation is appropriate. Default = 20%. If target time = 20 minutes, the addition of low stage electric heat must satisfy the thermostat by less than 16 minutes. (target time - 20% default = 16 minutes).

LED Display	Description of System Status
IdL	Idle
FAn	Constant Fan
AC	Compressor Cooling, Single-Stage (non-comm units)
1AC	Compressor Cooling, Low Stage (non-comm units)
2AC	Compressor Cooling, High Stage (non-comm units)
AC1	Compressor Cooling, Low Stage (comm units)
AC2	Compressor Cooling, High Stage (comm units)
HP	Compressor Heat, Single-Stage (non-comm. units)
1AC	Compressor Heat, Low Stage (non-comm units)
2AC	Compressor Heat, High Stage (non-comm units)
HP1	Compressor Heat, Low Stage (Comm Units)
HP2	Compressor Heat, High Stage (Comm Units)
Ht	Electric Heat, Single Stage
Ht1	Electric Heat, Low Stage
Ht2	Electric Heat, High Stage
*dFt	Defrost, Single Stage Electric Heat (non-comm units)
dF1	Defrost, Low Stage Electric Heat
dF2	Defrost, High Stage Electric Heat
dHU	Dehumidification

* If a system is a heat pump connected legacy, then a DFT will show on the board in 2 instances.

1. If the heat pump calls for a defrost, Y and a W will be energized resulting in a DFT code on the air-handler display.
2. If the heat pump calls for auxiliary heat, Y and a W will be energized resulting in a DFT code on the air-handler display.

26 Air Flow Label

Menu Navigation and Selection Instructions:

Using Phone Application over Bluetooth Network:
1) Connect to the air handler (instructions provided by phone during connection process).
2) Select desired settings menu
3) Select item that requires adjustment and make necessary selection
4) Submit Changes

Using On-Board Push Buttons:
1) Use the Right and Left Buttons to scroll between menus
2) Use the Center Button to select desired menu when menu code is shown on 7-segment displays
3) Use the Left and Right Buttons to scroll through options within the desired menu (the display will flash while scrolling through options for selection)
4) Use the Center Button to select the displayed option (when selected the display will stop flashing)
5) Use the Center Button to finalize selection and return to the main menu

Profiles	Pre-Run	Short-Run	OFF Delay
1	--------	--------	60 sec/100%
2	--------	30 sec/50%	60 sec/100%
3	--------	7.5 min/82%	60 sec/100%
4	30 sec/50%	7.5 min/82%	60 sec/100%

Airflow Settings Instruction

1) For non-communicating installations, select the type of unit installed in the OdS menu (1AC = single-stage air conditioner, 1HP = single-stage heat pump, 2AC = 2 stage air conditioner, 2HP = 2 stage heat pump) Default = OFF (no outdoor unit).
2) Use the Tonnage Menu (ton) to select Cooling/Heat Pump Airflow (non-communicating installation). Tonnage selection options and corresponding airflow CFM can be found to the right. [Airflow = Tonnage Selection x 400] Default selection is 6.0 tons.
3) [Optional] Use the Cooling Trim Menu (CtF) to adjust the cooling airflow from -10% to +10% (2% increments). This applies for 2stage communicating outdoor units and single or 2 stage non-communicating outdoor units.
4) [Optional] Use the Heating Trim Menu (HtF) to adjust the heat pump airflow from -10% to +10% (2% increments). This applies for 2 stage communicating outdoor units and single or 2 stage non-communicating outdoor units.
5) [Optional] Use the Constant Fan Menu (FSD) to select the percentage of maximum airflow for continuous fan.
6) [Optional] Use the Cooling Airflow Profile Menu (CAP) to select between 5 cooling airflow profiles. Profile options 1-4 are listed above(option 5 is adjustable). See installation manual for further details.}

Tonnage Menu (t o n)

Tonnage Selection	Airflow	Tonnage Selection	Airflow
1.0	400	3.6	1440
1.1	440	3.7	1480
1.2	480	3.8	1520
1.3	520	3.9	1560
1.4	560	4.0	1600
1.5	600	4.1	1640
1.6	640	4.2	1680
1.7	680	4.3	1720
1.8	720	4.4	1760
1.9	760	4.5	1800
2.0	800	4.6	1840
2.1	840	4.7	1880
2.2	880	4.8	1920
2.3	920	4.9	1960
2.4	960	5.0	2000
2.5	1000	5.1	2040
2.6	1040	5.2	2080
2.7	1080	5.3	2120
2.8	1120	5.4	2160
2.9	1160	5.5	2200
3.0	1200	5.6	2240
3.1	1240	5.7	2280
3.2	1280	5.8	2320
3.3	1320	5.9	2360
3.4	1360	6.0	2400
3.5	1400		

Maximum Airflow Output

AMVT24B*	1275	AMVT48C*	1700
AMVT30B*	1275	AMVT60D*	2200
AMVT36B*	1450		
AMVT36C* AMVT42C*	1575		

*If airflow is set above the model's maximum value, the output will be the maximum value

Electric Heat Airflow Table

Htr Kw	AMVT24BP13*	AMVT30BP13* AMVT36BP13*	AMVT36CP13*	AMVT42CP13*	AMVT48CP13*	AMVT60DP13*
3	550	550	630	NR	NR	NR
5	650	650	735	735	880	1135
6	700	700	810	810	880	1265
8	800	800	925	925	1045	1375
10	850	875	1020	1020	1200	1455
15	875	1050	1145	1145	1420	1815
19	NR	NR	1345	1345	1480	NR
20	NR	NR	NR	NR	NR	1860
25	NR	NR	NR	NR	NR	1925

Selecting Heater Kit: Use the Electric Heating Wattage Menu (EHt) to select heater kit size.
See "Menu Navigation and Selection Instructions" above.
Default selection is 0 (No Heat Kit). Select installed heater kit for heater kit operation.
NR - Not Rated

0140A20019-A

TABLE 19

27 Wiring Diagram

WARNING

HIGH VOLTAGE!
DISCONNECT ALL POWER BEFORE SERVICING OR INSTALLING THIS UNIT. MULTIPLE POWER SOURCES MAY BE PRESENT. FAILURE TO DO SO MAY CAUSE PROPERTY DAMAGE, PERSONAL INJURY OR DEATH.

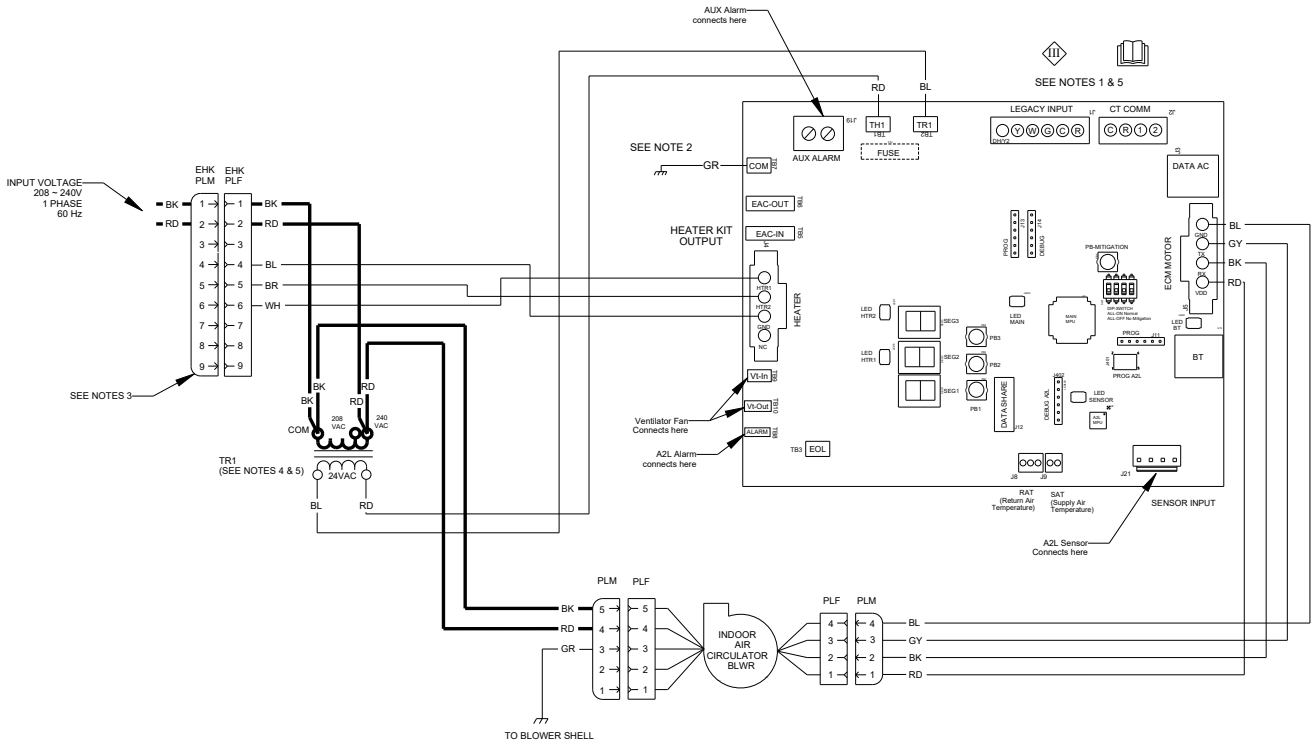

NOTES:

1. REPLACEMENT WIRE MUST BE SAME SIZE AND TYPE OF INSULATION AS ORIGINAL (AT LEAST 105° C). USE COPPER CONDUCTORS ONLY. USE N.E.C. CLASS 2 WIRE FOR ALL LOW VOLTAGE FIELD CONNECTIONS.
2. UNIT MUST BE PERMANENTLY GROUNDED AND CONFORM TO N.E.C. AND LOCAL CODES.
3. DISCARD CONNECTOR EHK PLM WHEN INSTALLING OPTIONAL HEAT KIT.
4. RED WIRE CONNECTED TO 240V TAP AT THE FACTORY AND BLACK WIRE TO COM TERMINAL FOR 208V SUPPLY POWER, MOVE RED WIRE FROM 240 TAP TO THE 208V TAP.
5. LOW VOLTAGE TRANSFORMER RATED 24VAC OUTPUT 75VA @ 3.125 AMP.

COMPONENT LEGEND

CB	CIRCUIT BREAKER
CR	CONTROL RELAY
EHK	ELECTRIC HEATER KIT
EM	EVAPORATOR MOTOR
GND	GROUND
PCB	CONTROL BOARD
PLF	FEMALE PLUG
PLM	MALE PLUG
REF	REFRIGERANT
TB	TERMINAL BOARD
TR	TRANSFORMER

WIRE CODE

BK	BLACK
BL	BLUE
BR	BROWN
GR	GREEN
GY	GRAY
PU	PURPLE
RD	RED
WH	WHITE
YL	YELLOW
PK	PINK

FACTORY WIRING

- HIGH VOLTAGE
- OPTIONAL HIGH VOLTAGE
- LOW VOLTAGE
- OPTIONAL LOW VOLTAGE
- CHASIS GROUND
- READ THE INSTRUCTION
- CLASS III

0140A20088-A

Wiring is subject to change. Always refer to the wiring diagram on the unit for the most up-to-date wiring.

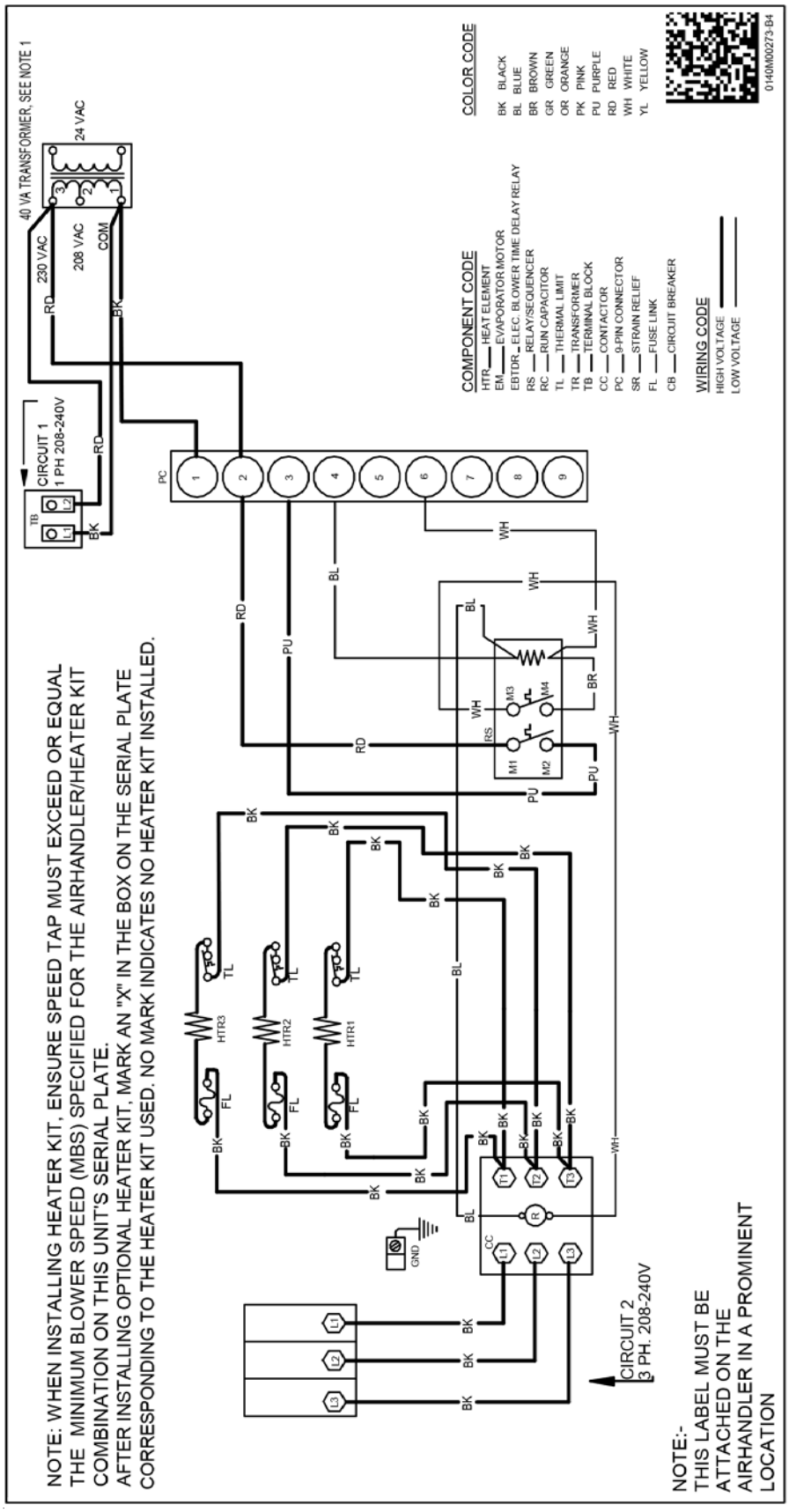

Wiring is subject to change. Always refer to the wiring diagram on the unit for the most up-to-date wiring.

Replace or Clean Filter

IMPORTANT NOTE: Never operate unit without a filter installed as dust and lint will build up on internal parts resulting in loss of efficiency, equipment damage and possible fire.

An indoor air filter must be used with your comfort system. A properly maintained filter will keep the indoor coil of your comfort system clean. A dirty coil could cause poor operation and/or severe equipment damage.

Your air filter or filters could be located in your furnace, in a blower unit, or in "filter grilles" in your ceiling or walls. The installer of your air conditioner or heat pump can tell you where your filter(s) are, and how to clean or replace them.

Check your filter(s) at least once a month. When they are dirty, replace or clean as required. Disposable type filters should be replaced. Reusable type filters may be cleaned.

You may want to ask your dealer about high efficiency filters. High efficiency filters are available in both electronic and non-electronic types. These filters can do a better job of catching small airborne particles.

Ultraviolet Coil and Air Purifier

Clean Comfort brand UV coil purifiers also can be purchased from distributor. Maximum UV lamp diameter to be used is 1.375" to reduce the possibility of air leak.
The power source must be installed external of the unit. Ensure that the wiring is routed though the access panel knockout with the grommet included. A magnetic door switch must be installed to avoid an accidental ultraviolet exposure during service.
Refer to UV coil purifiers product specification installation manual for additional details. See Table 21 for models part numbers

UV-C part Numbers	
Models	Lamp
UC18S15-24	UCP-16013
UC18S15-24B	UCP-16012

Table 20

UVC light conversion kit is required to install with the UVC light. For installation refer to the UVC drain pan kit installation manual IO -7023 for additional details for model and kit assignment.

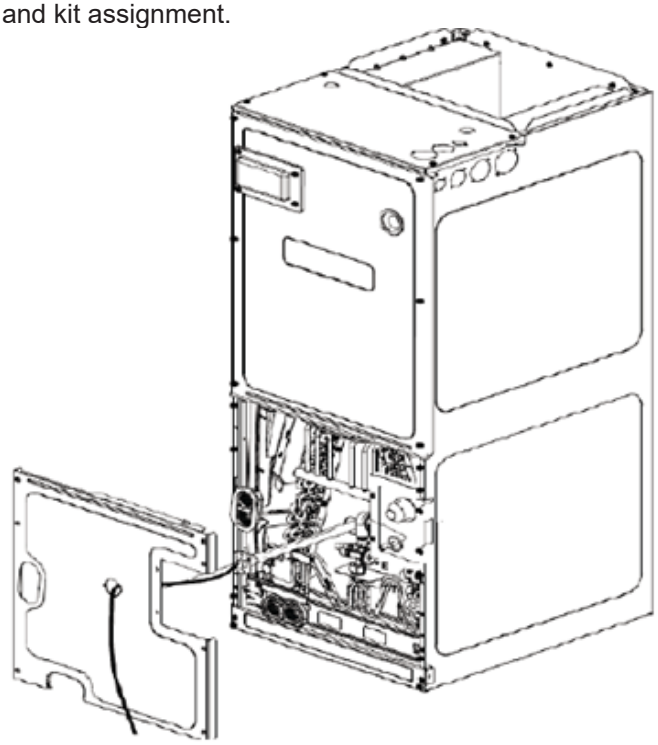

Figure 27

MODEL SIZE	KIT #	PARTS				
AMVT24B	UVPK01	DRAIN PAN MAIN	DRAIN PAN SIDE	NA	CONDENSATE COLLECT OR, FRONT	CONDENSATE COLLECT OR, BACK
AMVT30B	UVPK02			DRAIN PAN EXT		
AMVT36B	UVPK02					
AMVT36C	UVPK03					
AMVT42C	UVPK04					
AMVT48C	UVPK05					
AMVT60D	UVPK07					

Table 21

Motors

Indoor and outdoor fan motors are permanently lubricated and do not require additional oiling.

WARNING

HIGH VOLTAGE
DISCONNECT ALL POWER BEFORE SERVICING OR INSTALLING THIS UNIT. MULTIPLE POWER SOURCES MAY BE PRESENT. FAILURE TO DO SO MAY CAUSE PROPERTY DAMAGE, PERSONAL INJURY OR DEATH.

ALUMINUM INDOOR COIL CLEANING

(QUALIFIED SERVICER ONLY)

A2L sensor must be removed from the unit before applying coil cleaners to avoid damage and contamination. Reassemble the A2L sensor back to the unit after done with coil cleaning process.

This unit is equipped with an aluminum tube evaporator coil. The safest way to clean the evaporator coil is to simply flush the coil with water. This cleaning practice remains as the recommended cleaning method for both copper tube and aluminum tube residential evaporator coils.

It has been determined that many coil cleaners and drain pan tablets contain corrosive chemicals that can be harmful to aluminum tube and fin evaporator coils. Even a one-time application of these corrosive chemicals can cause premature aluminum evaporator coil failure. Any cleaners that contain corrosive chemicals including, but not limited to, chlorine and hydroxides, should not be used.
An alternate cleaning method is to use one of the products listed in TP-109* to clean the coils. The cleaners listed are the only agents deemed safe and approved for use to clean round tube aluminum coils. TP-109 is also available on the web site in Partner Link > Service Toolkit.

NOTE: Ensure coils are rinsed well after use of any chemical cleaners.

CAUTION

TO AVOID THE RISK OF EQUIPMENT DAMAGE OR FIRE, INSTALL THE SAME AMPERAGE BREAKER OR FUSE AS YOU ARE REPLACING. IF THE CIRCUIT BREAKER OR FUSE SHOULD OPEN AGAIN WITHIN THIRTY DAYS, CONTACT A QUALIFIED SERVICER TO CORRECT THE PROBLEM.
IF YOU REPEATEDLY RESET THE BREAKER OR REPLACE THE FUSE WITHOUT HAVING THE PROBLEM CORRECTED, YOU RUN THE RISK OF SEVERE EQUIPMENT DAMAGE.

BEFORE YOU CALL YOUR SERVICER

- Check the thermostat to confirm that it is properly set.
- Wait 15 minutes. Some devices in the outdoor unit or in programmable thermostats will prevent compressor operation for a while, and then reset automatically. Also, some power companies will install devices which shut off air conditioners for several minutes on hot days. If you wait several minutes, the unit may begin operation on its own.
- Check the electrical panel for tripped circuit breakers or open fuses. Reset the circuit breakers or replace fuses as necessary.
- Check the disconnect switch near the indoor furnace or blower to confirm that it is closed.
- Check for obstructions on the outdoor unit. Confirm that it has not been covered on the sides or the top. Remove any obstruction that can be safely removed. If the unit is covered with dirt or debris, call a qualified servicer to clean it.
- Check for blockage of the indoor air inlets and outlets. Confirm that they are open and have not been blocked by objects (rugs, curtains or furniture).
- Check the filter. If it is dirty, clean or replace it.
- Listen for any unusual noise(s), other than normal operating noise, that might be coming from the outdoor unit. If you hear unusual noise(s) coming from the unit, call a qualified servicer.

HOMEOWNER SUPPORT
DAIKIN COMFORT TECHNOLOGIES
MANUFACTURING, INC.
19001 KERMIER ROAD
WALLER, TEXAS 77484
(855) 770-5678

28 Dehumidification Control Options

Key Mitigations:

1. Full featured TS (dehum & overcool)
2. Connect G and dehum wire correctly
3. Dehumidistat

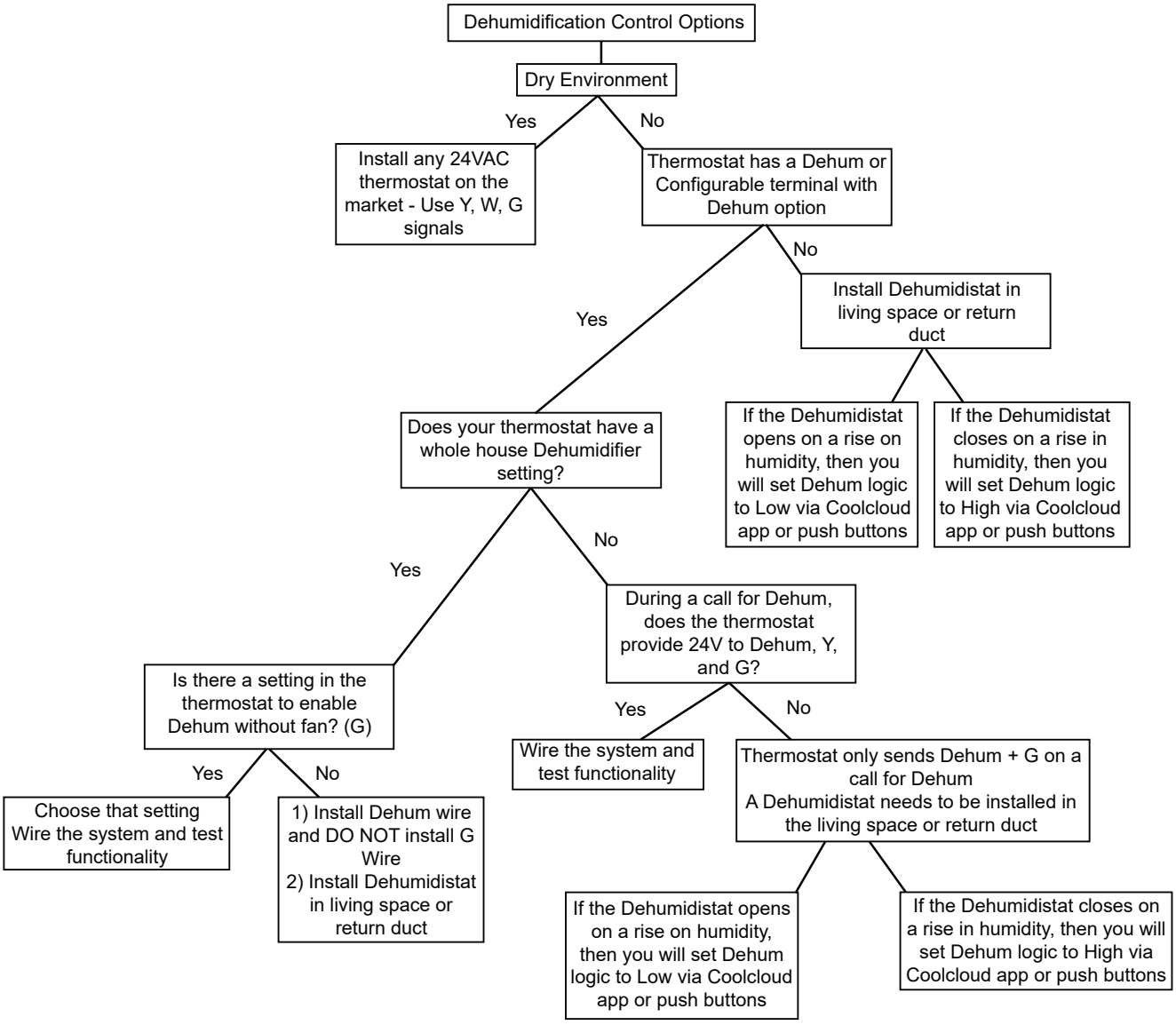

29 Start-Up Checklist

Air Handler / Coil				
	Model Number	_____		
	Serial Number	_____		
ELECTRICAL				
Line Voltage (Measure L1 and L2 Voltage)	L1 - L2	_____		
Secondary Voltage (Measure Transformer Output Voltage)	R - C	_____		
Blower Amps		_____		
Heat Strip 1 - Amps		_____		
Heat Strip 2 - Amps		_____		
BLOWER EXTERNAL STATIC PRESSURE				
Return Air Static Pressure		_____	IN. W.C.	
Supply Air Static Pressure		_____	IN. W.C.	
Total External Static Pressure (Ignoring +/- from the reading above, add total here)		_____	IN. W.C.	
TEMPERATURES				
Return Air Temperature (Dry bulb / Wet bulb)		_____	DB °F	_____ WB °F
Cooling Supply Air Temperature (Dry bulb / Wet bulb)		_____	DB °F	_____ WB °F
Heating Supply Air Temperature		_____	DB °F	
Temperature Rise		_____	DB °F	
Delta T (Difference between Supply and Return Temperatures)		_____	DB °F	

Air Handler / Coil - (Inverter Matched)	
INVERTER AH / COIL ONLY	
Check EEV and EEV wiring is secure (no adjustment required)	_____

Additional Checks	
Check wire routings for any rubbing	_____
Check product for proper draining	_____
Check screw tightness on blower wheel	_____
Check factory wiring and wire connections	_____
Check product for proper clearances as noted by installation instructions	_____

°F to °C formula: (°F - 32) divided by 1.8 = °C **°C to °F formula: (°C multiplied by 1.8) + 32 = °F**

THIS PAGE IS INTENTIONALLY LEFT BLANK

THIS PAGE IS INTENTIONALLY LEFT BLANK

CUSTOMER FEEDBACK
We are very interested in all product comments.
Please fill out the feedback form on one of the following links:
Goodman® Brand Products: (http://www.goodmanmfg.com/about/contact-us).
Amana® Brand Products: (http://www.amana-hac.com/about-us/contact-us).
You can also scan the QR code on the right for the product brand you purchased to be directed to the feedback page.

GOODMAN® BRAND

AMANA® BRAND

Our continuing commitment to quality products may mean a change in specifications without notice.

PFAS

19001 Kermier Road Waller, TX 77484
www.goodmanmfg.com - or - www.amana-hac.com
© 2026 Daikin Comfort Technologies Manufacturing, Inc.
AMANA® HEATING & AIR CONDITIONING ® / TM 2026 Amana. Manufactured under license by Daikin. Limited warranty provided by the manufacturer. All trademarks are the property of their respective owners.