CONDENSING UNIT
AIR CONDITIONING
INSTALLATION & SERVICE REFERENCE

© 2025-2026 Daikin Comfort Technologies Manufacturing, Inc.
19001 Kermier Rd. Waller, TX 77484
www.goodmanmfg.com -or- www.amana-hac.com
P/N: IOG-4048F **Date:** August 2026

IMPORTANT SAFETY INSTRUCTIONS

The following symbols and labels are used throughout this manual to indicate immediate or potential safety hazards. It is the owner's and installer's responsibility to read and comply with all safety information and instructions accompanying these symbols. Failure to heed safety information increases the risk of personal injury, property damage, and/or product damage.

WARNING

HIGH VOLTAGE!
DISCONNECT ALL POWER BEFORE SERVICING OR INSTALLING THIS UNIT. MULTIPLE POWER SOURCES MAY BE PRESENT. FAILURE TO DO SO MAY CAUSE PROPERTY DAMAGE, PERSONAL INJURY OR DEATH.

WARNING

ONLY PERSONNEL THAT HAVE BEEN TRAINED TO INSTALL, ADJUST, SERVICE, MAINTENANCE OR REPAIR (HEREINAFTER, "SERVICE") THE EQUIPMENT SPECIFIED IN THIS MANUAL SHOULD SERVICE THE EQUIPMENT.

THIS EQUIPMENT IS NOT INTENDED FOR USE BY PERSONS (INCLUDING CHILDREN) WITH REDUCED PHYSICAL, SENSORY OR MENTAL CAPACITIES, OR LACK OF EXPERIENCE AND KNOWLEDGE, UNLESS THEY HAVE BEEN GIVEN SUPERVISION OR INSTRUCTION CONCERNING USE OF THE APPLIANCE BY A PERSON RESPONSIBLE FOR THEIR SAFETY.

CHILDREN SHOULD BE SUPERVISED TO ENSURE THAT THEY DO NOT PLAY WITH THE EQUIPMENT.

THE MANUFACTURER WILL NOT BE RESPONSIBLE FOR ANY INJURY OR PROPERTY DAMAGE ARISING FROM IMPROPER SUPERVISION, SERVICE OR SERVICE PROCEDURES. IF YOU SERVICE THIS UNIT, YOU ASSUME RESPONSIBILITY FOR ANY INJURY OR PROPERTY DAMAGE WHICH MAY RESULT. IN ADDITION, IN JURISDICTIONS THAT REQUIRE ONE OR MORE LICENSES TO SERVICE THE EQUIPMENT SPECIFIED IN THIS MANUAL, ONLY LICENSED PERSONNEL SHOULD SERVICE THE EQUIPMENT. IMPROPER SUPERVISION, INSTALLATION, ADJUSTMENT, SERVICING, MAINTENANCE OR REPAIR OF THE EQUIPMENT SPECIFIED IN THIS MANUAL, OR ATTEMPTING TO INSTALL, ADJUST, SERVICE OR REPAIR THE EQUIPMENT SPECIFIED IN THIS MANUAL WITHOUT PROPER SUPERVISION OR TRAINING MAY RESULT IN PRODUCT DAMAGE, PROPERTY DAMAGE, PERSONAL INJURY OR DEATH.

WARNING

DO NOT BYPASS SAFETY DEVICES.

CAUTION

SCROLL EQUIPPED UNITS SHOULD NEVER BE USED TO EVACUATE THE AIR CONDITIONING SYSTEM. VACUUMS THIS LOW CAN CAUSE INTERNAL ELECTRICAL ARCING RESULTING IN A DAMAGED OR FAILED COMPRESSOR.

WARNING

DO NOT USE MEANS TO ACCELERATE THE DEFROSTING PROCESS OR TO CLEAN, OTHER THAN THOSE RECOMMENDED BY THE MANUFACTURER. THE APPLIANCE SHALL BE STORED IN A ROOM WITHOUT CONTINUOUSLY OPERATING IGNITION SOURCES. FOR EXAMPLE: OPEN FLAMES, AN OPERATING GAS APPLIANCE OR AN OPERATING ELECTRIC HEATER. DO NOT PIERCE OR BURN. BE AWARE THAT REFRIGERANTS MAY NOT CONTAIN AN ODOR.

WARNING

A TRIPPED CIRCUIT BREAKER OR BLOWN FUSE MAY INDICATE THAT AN ELECTRICAL PROBLEM EXISTS.
DO NOT RESET A CIRCUIT BREAKER OR REPLACE FUSES WITHOUT FIRST PERFORMING THOROUGH ELECTRICAL TROUBLESHOOTING AND TESTING PROCEDURES.

QUEBEC DISCLOSURE REGARDING AVAILABILITY OF REPLACEMENT PARTS, REPAIR SERVICES AND INFORMATION FOR MAINTENANCE AND REPAIR: DAIKIN COMFORT TECHNOLOGIES MANUFACTURING, INC. (DAIKIN) DOES NOT GUARANTEE THE AVAILABILITY OF (1) REPLACEMENT PARTS; (2) REPAIR SERVICES; AND (3) INFORMATION NECESSARY TO MAINTAIN OR REPAIR PRODUCTS, WITHIN THE MEANING OF SECTION 39.1 OF THE CONSUMER PROTECTION ACT, CQLR, C P-40.1 AND SECTION 79.18 OF THE REGULATION RESPECTING THE APPLICATION OF THE CONSUMER PROTECTION ACT, CQLR, C P-40.1, R. 3.

AVIS POUR LE QUÉBEC CONCERNANT LA DISPONIBILITÉ DES PIÈCES DE RECHANGE, DES SERVICES DE RÉPARATION ET DES RENSEIGNEMENTS POUR L'ENTRETIEN ET LA RÉPARATION : DAIKIN COMFORT TECHNOLOGIES MANUFACTURING, INC. (DAIKIN) NE GARANTIT PAS LA DISPONIBILITÉ (1) DES PIÈCES DE RECHANGE, (2) DES SERVICES DE RÉPARATION ET (3) DES RENSEIGNEMENTS POUR L'ENTRETIEN ET LA RÉPARATION, AU SENS DE L'ARTICLE 39.1 DE LA LOI SUR LA PROTECTION DU CONSOMMATEUR, RLRQ C P-40.1 ET DE L'ARTICLE 79.18 DU RÈGLEMENT D'APPLICATION DE LA LOI SUR LA PROTECTION DU CONSOMMATEUR, RLRQ C P-40.1, R 3.

AMANA HEATING & AIR CONDITIONING ® / TM 2026 Amana. Manufactured under license by Daikin. Limited warranty provided by the manufacturer. All trademarks are the property of their respective owners.

INSTALLATION CLEARANCES

Special consideration must be given to location of the condensing unit(s) in regard to structures, obstructions, other units, and any/all other factors that may interfere with air circulation. Where possible, the top of the unit should be completely unobstructed; however, if vertical conditions require placement beneath an obstruction **there should be a minimum of 60 inches between the top of the unit and the obstruction(s).** Ensure there is not a potential for refrigerant to pool should a leak occur in the unit. The specified dimensions meet requirements for air circulation only. Consult all appropriate regulatory codes prior to determining final clearances.

Another important consideration in selecting a location for the unit(s) is the angle to obstructions. Either side adjacent the valves be placed toward the structure provided the side away from the structure maintains minimum service clearance. Corner installations are strongly discouraged.

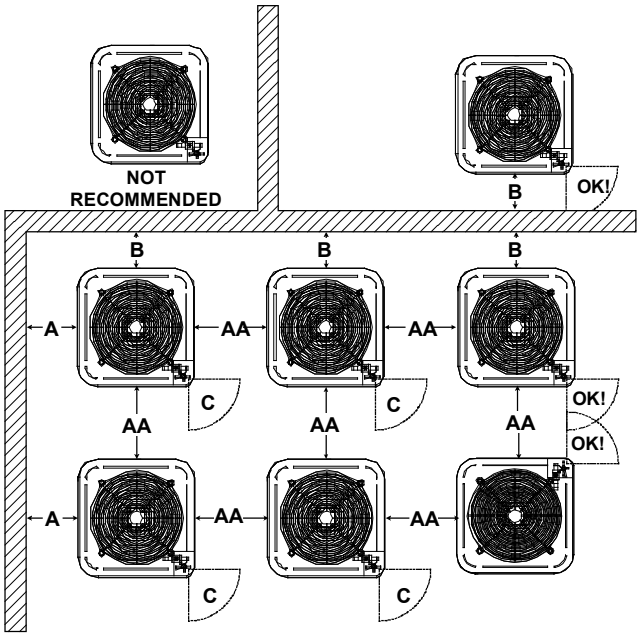

Minimum Airflow Clearance				
Model Type	**A**	**B**	**C**	**AA**
Residential	10"	10"	18"	20"
Light Commercial	12"	12"	18"	24"

This unit can be located at ground floor level or on flat roofs. At ground floor level, the unit must be on a solid, level foundation that will not shift or settle. To reduce the possibility of sound transmission, the foundation slab should not be in contact with or be an integral part of the building foundation. The dimensions of the space necessary for correct installation of the appliance including the minimum permissible distance to adjacent structures have been covered in this section (per UL 60335-2-40). Ensure the foundation is sufficient to support the unit. A concrete slab raised above ground level provides a suitable base.

SHIPPING INSPECTION

Always keep the unit upright; laying the unit on its side or top may cause equipment damage. Shipping damage, and subsequent investigation is the responsibility of the carrier. Verify the model number, specifications, electrical characteristics, and accessories are correct prior to installation. The distributor or manufacturer will not accept claims from dealers for transportation damage or installation of incorrectly shipped units.

Overcurrent Protection

The following overcurrent protection devices are approved for use.

- Time delay fuses
- HACR type circuit breakers

These devices have sufficient time delay to permit the motor-compressor to start and accelerate its load.

Charging Instructions

Additional refrigerant above the amount charged in the factory must be added during installation based on lineset length and the compatible indoor model. Carefully follow the Charge Verification section of this manual to ensure proper system function.

Storage and Transportation

Units come factory charged with refrigerant. Take care to store unit in a location that will minimize potential for damage. The unit should be stored away from continuously operating sources off ignition. If transporting the unit, ensure relevant regulations of the geographic area are followed.

CODES & REGULATIONS

This product is designed and manufactured to comply with national codes. Installation in accordance with such codes and/or prevailing local codes/regulations is the responsibility of the installer. The manufacturer assumes no responsibility for equipment installed in violation of any codes or regulations. Rated performance is achieved after 20 hours of operation. Rated performance is delivered at the specified airflow. See outdoor unit specification sheet for split system models or product specification sheet for packaged and light commercial models. Specification sheets can be found at www.goodmanmfg.com for Goodman® brand products or www.amana-hac.com for Amana® brand products. Within the website, please select the residential or commercial products menu and then select the submenu for the type of product to be installed, such as air conditioners or heat pumps, to access a list of product pages that each contain links to that model's specification sheet.

The United States Environmental Protection Agency (EPA) has issued various regulations regarding the introduction and disposal of refrigerants. Failure to

follow these regulations may harm the environment and can lead to the imposition of substantial fines. Should you have any questions please contact the local office of the EPA.

If replacing a condensing unit or air handler, the system must be manufacturer approved and Air Conditioning, Heating and Refrigeration Institute (AHRI) matched.

NOTE: Installation of unmatched systems is strongly discouraged.

Outdoor units are approved for operation above 55°F in cooling mode. Operation below 55°F requires the use of an approved low ambient kit. Note: LAKT01 Low ambient kit cannot be used with outdoor units containing ECM motors.

Damage to the unit caused by operating the unit in a structure that is not complete (either as part of new construction or renovation) is not covered under the warranty.

ROOFTOP INSTALLATIONS

If it is necessary to install this unit on a roof structure, ensure the roof structure can support the weight and that proper consideration is given to the weather-tight integrity of the roof. Since the unit can vibrate during operation, sound vibration transmission should be considered when installing the unit. Vibration absorbing pads or springs can be installed between the condensing unit legs or frame and the roof mounting assembly to reduce noise vibration.

WARNING

To avoid possible injury, explosion or death, practice safe handling of refrigerants.

SAFE REFRIGERANT HANDLING

While these items will not cover every conceivable situation, they should serve as a useful guide.

WARNING

Refrigerants are heavier than air. They can "push out" the oxygen in your lungs or in any enclosed space. To avoid possible difficulty in breathing or death:

- Never purge refrigerant into an enclosed room or space. By law, all refrigerants must be reclaimed.
- If an indoor leak is suspected, thoroughly ventilate the area before beginning work.
- Liquid refrigerant can be very cold. To avoid possible frostbite or blindness, avoid contact and wear gloves and goggles. If liquid refrigerant does contact your skin or eyes, seek medical help immediately.
- Always follow EPA regulations. Never burn refrigerant, as poisonous gas will be produced.

WARNING

To avoid possible explosion:

- Never apply flame or steam to a refrigerant cylinder. If you must heat a cylinder for faster charging, partially immerse it in warm water.
- Never fill a cylinder more than 80% full of liquid refrigerant.
- Never add anything other than R-32 to an R-32 cylinder. The service equipment used must be listed or certified for the type of refrigerant used.
- Store cylinders in a cool, dry place. Never use a cylinder as a platform or a roller.

WARNING

To avoid possible explosion, use only returnable (not disposable) service cylinders when removing refrigerant from a system.

- Ensure the cylinder is free of damage which could lead to a leak or explosion.
- Ensure the hydrostatic test date does not exceed 5 years.
- Ensure the pressure rating meets or exceeds 400 psig.

When in doubt, do not use cylinder.

Prior to beginning work on systems containing flammable refrigerants, safety checks are necessary to ensure that the risk of ignition is minimized. Work shall be undertaken under a controlled procedure as stated in this manual so as to minimize the risk of a flammable gas or vapor being present while the work is being performed. All persons working in the local area shall be instructed on the nature of work being carried out. Work in confined spaces shall be avoided. The area shall be checked with an appropriate refrigerant detector prior to and during work, to ensure the technician is aware of potentially flammable atmospheres. Ensure that the leak detection equipment being used is suitable for use with A2L refrigerants, i.e. non-sparking, adequately sealed or intrinsically safe.

If any hot work is to be conducted on the refrigerating equipment or any associated parts, appropriate fire extinguishing equipment shall be available. Have a dry powder or CO_2 fire extinguisher adjacent to the hot work area. No person carrying out work on the refrigeration system shall use any sources of ignition in such a manner that it may lead to the risk of fire or explosion. All possible ignition sources, including cigarette smoking, should be kept sufficiently far from the site of work, during which refrigerant can possibly be released to the surrounding space. Prior to work taking place, the area around the equipment is to be surveyed to make sure that there are no flammable hazards or ignition risks. "No Smoking" signs shall be displayed.

Ensure that the area is in the open or that it is adequately ventilated before breaking into the system or conducting any hot work. A degree of ventilation shall continue during the period that the work is carried out. Ventilation should be provided such that any leaked refrigerant will

safely disperse, preferably expelled externally into the atmosphere. The outlet for the vacuum pump shall not be close to any potential ignition sources and ventilation shall be available.

Take care to avoid contamination of different refrigerants when using charging equipment. Hoses or lines should be as short as possible. The refrigerant cylinders should be kept in an appropriate position according to their instructions.

If a refrigerant leak is suspected, all naked flames shall be extinguished and the area shall be ventilated. If a leak is found which requires brazing, all refrigerant shall be recovered from the system prior to performing hot work. Ensure the unit is grounded prior to charging the system.

Refrigerant Lines

CAUTION

The compressor POE oil for R-32 units is extremely susceptible to moisture absorption and could cause compressor failure. Do not leave system open to atmosphere any longer than necessary for installation.

WARNING

Partial units shall only be connected to an appliance suitable for the same refrigerant.

Partial units shall only be connected to an appliance suitable for the same refrigerant. Review serial plate on both evaporator and condenser unit to assure the maximum operating pressure matches before connecting.

For evaporating and condensing units, the instructions or markings shall include a wording to assure that the maximum operating pressure is considered when connecting to any condenser unit or evaporator unit (UL 60335-2-40).

Use only refrigerant grade (dehydrated and sealed) copper tubing to connect the condensing unit with the indoor evaporator. Use the minimum amount of copper tubing where possible. After cutting the tubing, install plugs to keep refrigerant tubing clean and dry prior to and during installation. Tubing should always be cut square keeping ends round and free from burrs. Clean the tubing to prevent contamination.

To prevent physical damage to refrigerant lines during operation and service, do NOT let refrigerant lines come in direct contact with plumbing, ductwork, floor joists, wall studs, floors, and walls. When running refrigerant lines through a foundation or wall, openings should allow for sound and vibration absorbing material to be placed or installed between tubing and foundation. Any gap between foundation or wall and refrigerant lines should be filled with a pliable silicon-based caulk, RTV or a vibration damping material. Avoid suspending refrigerant tubing from joists and studs with rigid wire or straps that would come in contact with the tubing. Use an insulated or suspension type hanger. Ensure installation of refrigerant lines is in compliance with nation and local codes and standards. Compliance with national gas regulations shall be observed. Keep both lines separate and always insulate the suction line.

All field joints created shall be accessible for inspection prior to being covered or enclosed. When installing refrigerant lines between evaporating and condensing unit, ensure there are no connecting joints and no bends with a centerline radius less than 2.5 times the external pipe diameter.

This unit is a partial unit air conditioner, complying with partial unit requirements of this international standard, and must be only connected to other units that have been confirmed as complying to corresponding partial unit requirements of this international standard (UL 60335-2-40).

These sizes are recommended for line lengths of 79 feet or less to obtain optimum performance. For alternate line sizing options or runs of more than 79 feet, refer to TP-110 R-32 Long Line Set Application Guidelines or contact your distributor for assistance.

RECOMMENDED INTERCONNECTING TUBING (Ft)						
Cond Unit Tons	0-24		25-49		50-79*	
	Line Diameter (In. OD)					
	Suct	Liq	Suct	Liq	Suct	Liq
1 1/2	5/8	1/4	3/4	3/8	3/4	3/8
2	5/8	1/4	3/4	3/8	3/4	3/8
2 1/2	5/8	1/4	3/4	3/8	3/4	3/8
3	3/4	3/8	7/8	3/8	7/8	3/8
3 1/2	7/8	3/8	1 1/8	3/8	1 1/8	3/8
4	7/8	3/8	1 1/8	3/8	1 1/8	3/8
5	7/8	3/8	1 1/8	3/8	1 1/8	3/8

Lines greater than 79 feet in length or vertical elevation from more than 50 feet refer to the TP-110 R-32 Long Line Set Application Guide lines or contact your distributor for assistance.

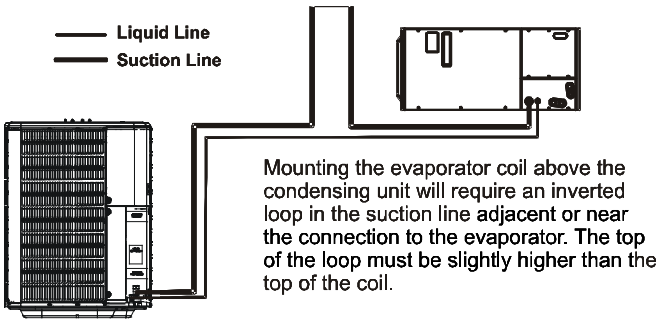

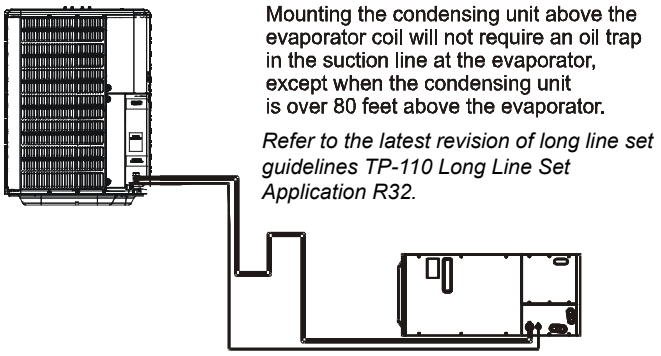

Insulation is necessary to prevent condensation from forming and dropping from the suction line. Armflex (or satisfactory equivalent) with 3/8” min. wall thickness is recommended. In severe conditions (hot, high humidity areas) 1/2” insulation may be required. Insulation must be installed in a manner which protects tubing from damage and contamination.

Existing Line Sets

Where possible, drain as much residual compressor oil from existing systems, lines, and traps; pay close attention to low areas where oil may collect. Use of an approved flushing agent is recommended followed by a nitrogen purge to remove any remaining flushing agent from the lines or indoor coil. Replacement of indoor coil is recommended.

NOTE: If using existing indoor coil and changing refrigerant types, ensure the indoor coil and metering device are compatible with the type of refrigerant being used. If new indoor coil is required check spec sheet or AHRI for approved coil. Refer to the indoor coil installation manual for instructions and requirements regarding the installation of the refrigerant detection system to the existing furnace assembly. If system is being replaced due to compressor electrical failure, assume acid is in system. Refer to Service Procedure Compressor Burnout in service manual for clean-up procedure.

Burying Refrigerant Lines

If burying refrigerant lines can not be avoided, use the following checklist.

1. Insulate liquid and suction lines separately.
2. Enclose all underground portions of the refrigerant lines in waterproof material (conduit or pipe) sealing the ends where tubing enters/exits the enclosure.
3. If the lines must pass under or through a concrete slab, ensure lines are adequately protected and sealed.

WARNING

Only brazing techniques and approved mechanical joints should be used to connect refrigerant tubing connections. Non-approved mechanical connectors and other methods are not permitted in this system containing A2L refrigerant. Approved mechanical joints will be detailed in the product’s specification sheets.

Refrigerant Line Connections

IMPORTANT: To avoid overheating the service valve, TXV valve, or filter drier while brazing, wrap the component with a wet rag, or use a thermal heat trap compound. Be sure to follow the manufacturer’s instruction when using the heat trap compound. Note: Remove Schrader valves from service valves before brazing tubes to the valves. Use a brazing alloy of 5% minimum silver content. Do not use flux.

Before conducting any hot work, ensure the area is in the open or has adequate ventilation. The ventilation shall continue during the period of hot work and should safely disperse any released refrigerant. Torch heat required to braze tubes of various sizes is proportional to the size of the tube. Tubes of smaller size require less heat to bring the tube to brazing temperature before adding brazing alloy. Applying too much heat to any tube can melt the tube. Service personnel must use the appropriate heat level for the size of the tube being brazed.

NOTE: The use of a heat shield when brazing is recommended to avoid burning the serial plate or the finish on the unit.

1. The ends of the refrigerant lines must be cut square, deburred, cleaned, and be round and free from nicks or dents. Any other condition increases the chance of a refrigerant leak.
2. “Sweep” the refrigerant line with nitrogen or inert gas during brazing to prevent the formation of copper-oxide inside the refrigerant lines. The POE oils used in R-32 applications will clean any copper-oxide present from the inside of the refrigerant lines and spread it throughout the system. This may cause a blockage or failure of the metering device.
3. After brazing, quench the joints with water or a wet cloth to prevent overheating of the service valve.
4. Ensure the filter drier paint finish is intact after brazing. If the paint of the steel filter drier has been burned or chipped, repaint or treat with a rust preventative. This is especially important on suction line filter driers which are continually wet when the unit is operating.
5. All units come with a pre-installed OR field installed filter drier. If filter drier is not pre-installed, braze the included filter drier to the liquid line. The recommended location of the filter drier is before the expansion device at the indoor unit.

   Unidirectional Filter Driers can be installed horizontally (as shown) or vertically in the direction of the refrigerant flow (arrow/outlet facing down).

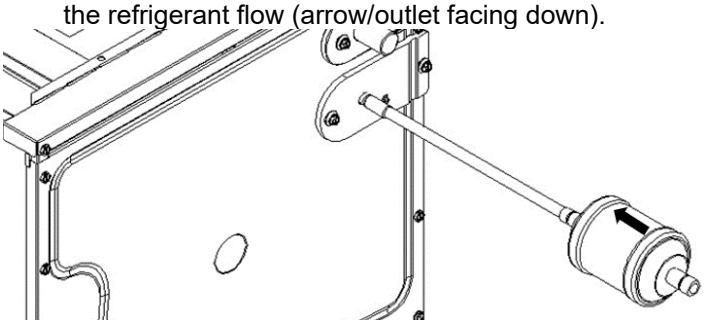

6.

NOTE: Be careful not to kink or dent refrigerant lines. Kinked or dented lines will cause poor performance or compressor damage.

Ensure connections created during installation are accessible for maintenance purposes.

Do NOT make final refrigerant line connection until plugs are removed from refrigerant tubing.

NOTE: Before brazing, verify indoor piston size by checking the piston kit chart packaged with indoor unit.

Standing Pressure Test/ Leak Detection Method (Recommended before System Evacuation)

WARNING

To avoid the risk of fire or explosion, never use oxygen, high pressure air or flammable gases for leak testing of a refrigeration system.

WARNING

To avoid possible explosion, the line from the nitrogen cylinder must include a pressure regulator and a pressure relief valve. The pressure relief valve must be set to open at no more than 450 psig.

Standing Pressure Test/ Leak Method Detection

Using dry nitrogen or dry helium, pressurize the system to maximum allowable pressure as listed on the serial plate. Allow the pressure to stabilize and hold for at least 15 Minutes. The system is considered leak-free if the pressure does not drop below above selected maximum allowable pressure. If, after 15 Minutes, the pressure drops, it implies a leak in the system. Proceed with identifying and sealing the leak and repeating the Standing Pressure Test. Leak test the system using dry nitrogen or dry helium and soapy water to identify leaks. **No refrigerant shall be used for pressure testing to detect leaks.** Proceed to system evacuation using the Deep Vacuum Method.

System Evacuation

Condensing unit liquid and suction valves are closed to contain the charge within the unit. The unit is shipped with the valve stems closed and caps installed. **Do not open valves until the system is evacuated.**

WARNING

REFRIGERANT UNDER PRESSURE!
Failure to follow proper procedures may cause property damage, personal injury or death.

NOTE: Scroll compressors should never be used to evacuate or pump down a heat pump or air conditioning system.

CAUTION

Prolonged operation at suction pressures less than 20 psig for more than 5 seconds will result in overheating of the scrolls and permanent damage to the scroll tips, drive bearings and internal seal.

Deep Vacuum Method (Recommended)

The Deep Vacuum Method requires a vacuum pump rated for 500 microns or less. This method is an effective and efficient way of assuring the system is free of non-condensable air and moisture. As an alternative, the Triple Evacuation Method is detailed in the Service Manual for this product model.

It is recommended to remove the Schrader Cores from the service valves using a core-removal tool to expedite the evacuation procedure.

1. Connect the vacuum pump, micron gauge, and vacuum rated hoses to both service valves. Evacuation must use both service valves to eliminate system mechanical seals.
2. Evacuate the system to less than 500 microns.
3. Isolate the pump from the system and hold vacuum for 10 minutes (minimum). Typically, pressure will rise slowly during this period. If the pressure rises to less than 1000 microns and remains steady, the system is considered leak-free; proceed to system charging and startup.
4. If pressure rises above 1000 microns but holds steady below 2000 microns, non-condensable air or moisture may remain or a small leak is present. Return to step 2: If the same result is achieved check for leaks and repair. Repeat the evacuation procedure.
5. If pressure rises above 2000 microns, a leak is present. Check for leaks and repair. Repeat the evacuation procedure.

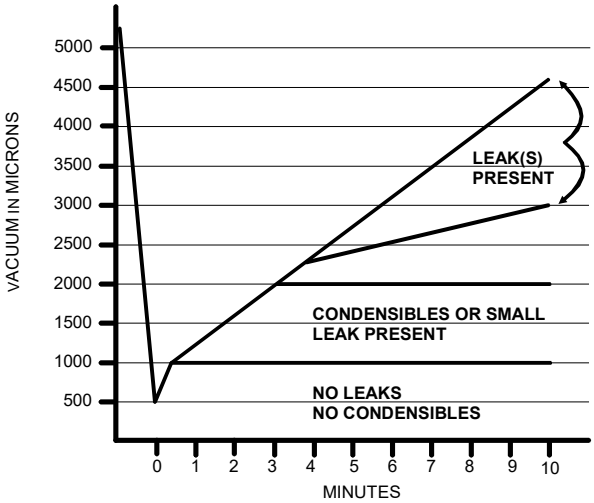

ELECTRICAL CONNECTIONS

WARNING

HIGH VOLTAGE!
DISCONNECT ALL POWER BEFORE SERVICING. MULTIPLE POWER SOURCES MAY BE PRESENT. FAILURE TO DO SO MAY CAUSE PROPERTY DAMAGE, PERSONAL INJURY OR DEATH DUE TO ELECTRIC SHOCK. WIRING MUST CONFORM WITH NEC OR CEC AND ALL LOCAL CODES. UNDERSIZED WIRES COULD CAUSE POOR EQUIPMENT PERFORMANCE, EQUIPMENT DAMAGE OR FIRE.

WARNING

ALL ACCESSORIES THAT MAY BECOME A POTENTIAL IGNITION SOURCE IF INSTALLED, SUCH AS ELECTRONIC AIR CLEANERS, MUST ONLY BE POWERED THROUGH OUR ACCESSORY CONTROL BOARD KIT. IF AN ELECTRONIC AIR CLEANER IS ALREADY INSTALLED IN THE DUCT WORK AND NOT CONNECTED TO THE ACCESSORY CONTROL BOARD, IT WILL HAVE TO BE DISABLED OR REMOVED. ENSURE THAT ANY ADDITIONAL WIRING FROM THE INDOOR UNIT TO THE ACCESSORY CONTROL BOARD IS ROUTED AND PROTECTED FROM DAMAGE AND WEAR, AVOIDING THE FLUE PIPE AND ANY JOINTS THAT MAY NEED BRAZED OR DISCONNECTED FOR SERVICE. REFER TO THE PRODUCT SPECIFICATION SHEET FOR THE ACCESSORY CONTROL BOARD KIT PART NUMBER

WARNING

TO AVOID THE RISK OF FIRE OR EQUIPMENT DAMAGE, USE COPPER CONDUCTORS.

NOTICE

UNITS WITH ROTARY OR RECIPROCATING COMPRESSORS AND NON-BLEED TXV'S REQUIRE A HARD START KIT.

The condensing unit rating plate lists pertinent electrical data necessary for proper electrical service and overcurrent protection. Wires should be sized to limit voltage drop to 2% (max.) from the main breaker or fuse panel to the condensing unit. Consult the NEC, CEC, and all local codes to determine the correct wire gauge and length.
Ensure wiring for the unit is in accordance with national wiring regulations. Check that cabling will not be subject to wear, corrosion, excessive pressure, vibration, sharp edges or any other adverse environmental effects. Ensure cabling will not be subject to any of the above effects as a result of aging or continual vibration.

Local codes often require a disconnect switch located near the unit; do not install the switch on the unit. Refer to the installation instructions supplied with the indoor furnace/ air handler for specific wiring connections and indoor unit configuration. Likewise, consult the instructions packaged with the thermostat for mounting and location information.

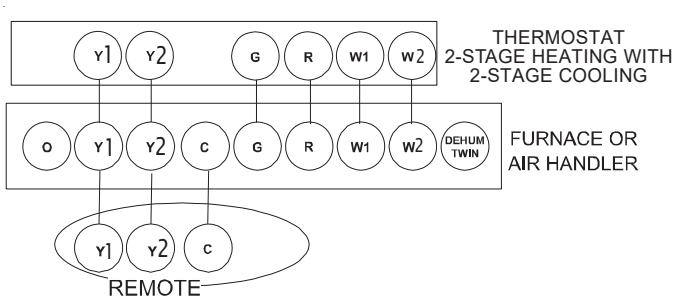

TWO-STAGE THERMOSTAT WITH THREE LOW VOLTAGE WIRES TO REMOTE

THREE PHASE COMPRESSOR ROTATION

CAUTION

USE CARE WHEN HANDLING SCROLL COMPRESSORS. DOME TEMPERATURES COULD BE HOT.

Three phase compressors are power phase dependent and can rotate in either direction.

Verify proper rotation for three phase compressors by ensuring the suction pressure drops and discharge pressure rises when the compressor is energized.
NOTE: WHEN OPERATED IN REVERSE, A THREE PHASE SCROLL COMPRESSORS IS NOISIER AND ITS CURRENT DRAW SUBSTANTIALLY REDUCED COMPARED TO MARKED VALUES.

To correct, disconnect power and switch any two leads at the unit contactor and re-observe.

HIGH VOLTAGE CONNECTIONS

Route power supply and ground wires through the high voltage port and terminate in accordance with the wiring diagram provided inside the control panel cover.

LOW VOLTAGE CONNECTIONS

Condensing unit control wiring requires 24 Volt minimum, 25VA service from the indoor transformer. Low voltage wiring for two-stage units depends on the thermostat used and the number of control wires between the indoor unit and the condensing unit. Route control wires through the low voltage port and terminate in accordance with the wiring diagram provided inside the control panel cover.

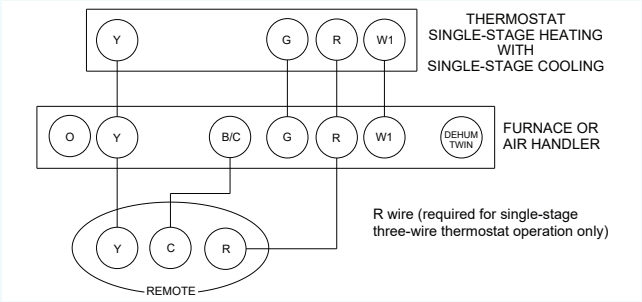

SINGLE-STAGE THERMOSTAT WITH THREE LOW VOLTAGE WIRES TO REMOTE

SYSTEM START UP

WARNING

HIGH VOLTAGE!
Disconnect ALL power before servicing or installing this unit. Multiple power sources may be present.
Failure to do so may cause property damage, personal injury or death.

CAUTION

POSSIBLE REFRIGERANT LEAK
To avoid a possible refrigerant leak, open the service valves until the top of the stem is 1/8" from the retainer.

When opening valves with retainers, open each valve only until the top of the stem is 1/8" from the retainer. To avoid loss of refrigerant, DO NOT apply pressure to the retainer. When opening valves without a retainer remove service valve cap and insert a hex wrench into the valve stem and back out the stem by turning the hex wrench counterclockwise. Open the valve until it contacts the rolled lip of the valve body.
NOTE: These are not back-seating valves. It is not necessary to force the stem tightly against the rolled lip.

NOTE: Power must be supplied to the outdoor units containing ECM motors before the power is applied to the indoor unit. Sending a low voltage signal without high voltage power present at the outdoor unit can cause malfunction of the control module on the ECM motor.

Adequate refrigerant charge for the matching AHRI rated designated tested combination (DTC) evaporator coil and 15 feet of lineset is supplied with the condensing unit. If using evaporator coils other than DTC coil, it may be necessary to add or remove refrigerant to attain proper charge. If line set exceeds 15 feet in length, refrigerant should be added at the amount specified in the below table based on suction and liquid tube diameters.

Initial Charge Addition per Foot (oz)		Liquid Line Diameter (in. OD)	
		1/4	3/8
Suction Line Diameter (in. OD)	5/8	0.23	0.53
	3/4	-	0.55
	7/8	-	0.58
	1-1/8	-	0.64

Be sure to fill out the refrigerant charge label on the lower access panel of the unit. Using a durable marking instrument, fill in the factory charge found on the serial plate of the unit in the first box labeled FACTORY CHARGE. In the next box labeled FIELD CHARGE fill in the amount of charge added to the system. NOTE: The field charge amount may not be finalized until final adjustment. In the third box labeled TOTAL CHARGE add the two amounts in the boxes above.

NOTE: Charge should always be checked using superheat when using a piston and subcooling when using TXV equipped indoor coil to verify proper charge.

Break vacuum by fully opening liquid service valve. After the refrigerant charge has bled into the system, open the suction service valve. The service valve cap is the secondary seal for the valves and must be properly tightened to prevent leaks. Make sure cap is clean and apply refrigerant oil to threads and sealing surface on inside of cap. Tighten cap finger-tight and then tighten additional 1/6 of a turn (1 wrench flat), or to the following specification, to properly seat the sealing surfaces.

1. 3/8" valve to 5 - 10 in-lbs
2. 5/8" valve to 5 - 20 in-lbs
3. 3/4" valve to 5 - 20 in-lbs
4. 7/8" valve to 5 - 20 in-lbs

Do not introduce liquid refrigerant from the cylinder into the crankcase of the compressor as this may damage the compressor.

1. Break vacuum by fully opening liquid and suction base valves.
2. Set thermostat to call for cooling. Check indoor and outdoor fan operation and allow system to stabilize for 10 minutes for fixed orifices and 10-15 minutes for expansion valves.

Charge Verification

WARNING

REFRIGERANT UNDER PRESSURE!
- **Do not overcharge system with refrigerant.**
- **Do not operate unit in a vacuum or at negative pressure.**

Failure to follow proper procedures may cause property damage, personal injury or death.

CAUTION

Use refrigerant certified to AHRI standards. Used refrigerant may cause compressor damage. Most portable machines cannot clean used refrigerant to meet AHRI standards.

NOTICE

Violation of EPA regulations may result in fines or other penalties.

CAUTION

Damage to the unit caused by operating the compressor with the suction valve closed is not covered under the warranty and may cause serious compressor damage.

Final Charge Adjustment

Airflow and Total Static Pressure for the indoor unit should be verified before attempting to charge system.

1. Total static pressure is .5” WC or less.
2. Airflow is correct for installed unit.
3. Airflow tables are in the installation manual and Spec Sheet for Indoor Unit.
4. Complete charging information is in Service Manual RS6200006.

NOTE: Superheat adjustments should not be made until indoor ambient conditions have stabilized. This could take up to 24 hours depending on indoor temperature and humidity. Before checking superheat run the unit in cooling for 10-15 minutes or until refrigerant pressures stabilize. Use the following guidelines and methods to check unit operation and ensure that the refrigerant charge is within limits.

The outdoor temperature must be 60°F or higher. Set the room thermostat to COOL, fan switch to AUTO, and set the temperature control well below room temperature.

Units matched with indoor coils equipped with a non-adjustable TXV should be charged by Subcooling only. Superheat on indoor coils with adjustable TXV valves are factory set and no adjustment is normally required during startup. Only in unique applications due to refrigerant line length, differences in height between the indoor and outdoor unit and refrigerant tubing sizes or poor performance should Superheat setting require adjustment. These adjustments should only be performed by qualified service personnel. For detailed charge and TXV adjustments refer to the appropriate Service Manual.

Fixed Orifice

CAUTION

To prevent personal injury, carefully connect and disconnect manifold gauge hoses. Escaping liquid refrigerant can cause burns. Do not vent refrigerant into the atmosphere. Recover all refrigerant during system repair and before final unit disposal.

1. Purge gauge lines. Connect service gauge manifold to base-valve service ports. Run system at least 10 minutes to allow pressure to stabilize.
2. Temporarily install a thermometer 4-6” from the compressor on the suction line. Ensure the thermometer makes adequate contact and is insulated for best possible readings. Use vapor temperature to determine superheat.
3. Refer to the superheat table provided for proper system superheat. Add charge to lower superheat or recover charge to raise superheat.
4. Disconnect manifold set, installation is complete. **Superheat Formula = Suct. Line Temp. - Sat. Suct. Temp.**

System Superheat Targets for Piston Match-ups (+/- 1.0 °F)

Outdoor Dry Bulb Temperature, °F	Indoor Wet Bulb Temperature, °F								
	55	57	59	61	63	65	67	69	71
60	10	13	17	20	23	26	29	30	31
65	8	11	14	16	19	22	26	27	29
70	5	8	10	13	15	19	23	24	25
75	---	---	6	9	11	15	20	21	23
80	---	---	---	---	7	12	17	18	20
85	---	---	---	---	---	8	13	15	16
90	---	---	---	---	---	7	10	11	13
95	---	---	---	---	---	---	7	8	10
100	---	---	---	---	---	---	---	7	8
105	---	---	---	---	---	---	---	---	7
110	---	---	---	---	---	---	---	---	---
115	---	---	---	---	---	---	---	---	---

SATURATED SUCTION PRESSURE TEMPERATURE CHART	
SUCTION PRESSURE	SATURATED SUCTION TEMPERATURE ºF
PSIG	R-32
40	-7
42	-6
44	-4
48	-1
50	1
52	2
54	4
56	5
58	6
60	8
62	9
64	10
66	12
68	13
70	14
72	15
74	17
76	18
78	19
80	20
85	23
90	25
95	28
100	30
105	33
110	35
115	37
120	40
125	42
130	44
135	46
140	48
145	50
150	52
155	53
160	55
165	57
170	59

SATURATED LIQUID PRESSURE TEMPERATURE CHART	
LIQUID PRESSURE	SATURATED SUCTION TEMPERATURE ºF
PSIG	R-32
200	68
210	71
220	74
230	77
240	80
250	82
260	85
270	87
280	90
290	92
300	94
310	97
320	99
330	101
340	103
350	105
360	107
370	109
380	111
390	113
400	115
410	117
420	118
430	120
440	122
450	124
460	125
470	127
480	128
490	130
500	132
525	135
550	139
575	143
600	146
625	150
650	153
675	156

NOTE: Specifications And Performance Data Listed Herein Are Subject To Change Without Notice.

EXPANSION VALVE SYSTEM

NOTE: Units matched with indoor coils equipped with a TXV should be charged by Subcooling only.

SUBCOOLING FORMULA = SATURATED LIQUID LINE TEMPERATURE - LIQUID LINE TEMPERATURE

In addition to conventional charging procedures, the following requirements shall be followed:

1. Ensure that contamination of different refrigerants does not occur when using charging equipment. Hoses or lines shall be as short as possible to minimize the amount of refrigerant contained in them.
2. R-32 Refrigerant Cylinders shall be kept in an appropriate position.
3. Ensure that the refrigeration system is grounded (prior) to charging the system with refrigerant.
4. Label the system when charging is complete (if not already).
5. Extreme care shall be taken not to overfill the refrigerating system.

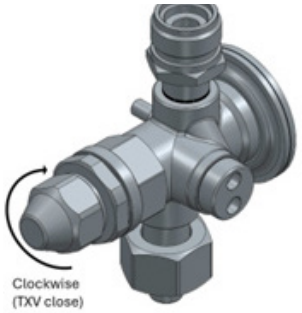

For adjustment, please refer to the illustration above. Carefully remove the nut without damaging the TXV. Rotate the TXV clockwise (right) to close it, ensuring the TXV is oriented as shown in the illustration. If it is not, adjust the orientation accordingly. Each adjustment should involve a rotation of 1/8 turn: clockwise (right) to close the TXV (as per Illustration) and counterclockwise (left) to open it. The total combined adjustment must not exceed 1.5 turns in either direction from the default set point.

NOTE: for two-stage models, unit will need to be charged at low stage.

1. Purge gauge lines. Connect service gauge manifold to base-valve service ports. Run system at least 10 minutes to allow pressure to stabilize.
2. Clamp a pipe clamp thermometer on the liquid line near the liquid line service valve and 4-6" from the compressor on the suction line.
   a. Ensure the thermometer makes adequate contact to obtain the best possible readings.
   b. The temperature read with the thermometer should be lower than the saturated condensing temperature.
3. The difference between the measured saturated condensing temperature and the liquid line temperature is the liquid Subcooling value.
4. TXV-based systems should have a Subcooling value of 8°F +/- 1°F.
5. Add refrigerant to increase Subcooling and remove refrigerant to decrease Subcooling.

NOTE: Units matched with indoor coils equipped with a TXV should be charged by Subcooling only. Superheat can also be utilized to best verify charge levels with an adjustable TXV and make adjustments when needed in unique applications due to refrigerant line length, differences in height between the indoor and outdoor unit and refrigerant tubing sizes. These adjustments should only be performed by qualified service personnel.

SUPERHEAT ADJUSTMENT

NOTE: Units matched with indoor coils equipped with a TXV should be charged by Subcooling only.

SUPERHEAT FORMULA = SUCTION LINE TEMPERATURE - SATURATED SUCTION TEMPERATURE

NOTE: for two-stage models, unit will need to be charged at low stage.

1. Clamp a pipe clamp thermometer near the suction line 4-6” from the compressor on the suction line.
   a. Ensure the thermometer makes adequate contact for the best possible readings.
   b. The temperature read with the thermometer should be higher than the saturated suction temperature.
2. The difference between the measured saturated suction temperature and the suction line temperature is the Superheat value.
3. TXV-based systems should have a Superheat value as shown in the table below.
4. Adjust Superheat by turning the TXV valve stem clockwise to **increase** and **counterclockwise** to **decrease**.
   a. If Subcooling and Superheat are low, **adjust** the TXV to the superheat setting specified in the table below and then check Subcooling.
   b. If Subcooling is low and Superheat is high, **add** charge to **raise** Subcooling to 8°F +/- 1°F then check Superheat.
   c. If Subcooling and Superheat are high, **adjust** the TXV valve to the superheat specified in the table below then check the Subcooling value.
   d. If Subcooling is high and Superheat is low, **adjust** the TXV valve to the superheat specified in the table below and **remove** charge to lower the Subcooling to 8°F +/- 1°F.

NOTE: <u>DO NOT</u> adjust the charge based exclusively on suction pressure unless for general charging in the case of a gross undercharge.

NOTE: Check the Schrader ports for leaks and tighten valve cores if necessary. Install caps finger-tight.

Superheat Settings for Expansion Valve Systems		
Tonnage	**SH at Compressor**	**SC at OD Liq**
1.5-2.5T	10-14°F	7-9°F
3.0-5.0T	9-11°F	7-9°F

Superheat setting for TXV systems for GLXS4B, GLXS4M, VLXS4B, ALXS4B, and ALXS4N family

Superheat Settings for Expansion Valve Systems		
Tonnage	SH at Compressor	SC at OD Liq
1.5-2.5T	10-14°F	7-9°F
3.0-5.0T	10-12°F	7-9°F

SUPERHEAT SETTING FOR TXV SYSTEMS FOR GLXS3B, ALXS3B, AND ALXS3N FAMILY

Superheat Settings for Expansion Valve Systems		
Tonnage	SH at Compressor	SC at OD Liquid
1.5T-4.0T	10-12°F	7-9°F
5.0T	10-12°F	5-7°F

SUPERHEAT / SUBCOOL SETTING FOR TXV SYSTEMS FOR GLXS5BA AND ALXS5BA

SYSTEM SERVICE AND DECOMMISSIONING

Should repairs requiring recovery of the refrigerant become necessary, special considerations must be made when breaking into systems with flammable refrigerants. These repairs shall only be performed by qualified service personnel and in compliance with local and national regulations.

The refrigerant charge shall only be recovered into a cylinder labeled for use with R-32. Ensure that the refrigerant cylinder(s) are capable of holding the total system charge. Cylinders shall be complete with a pressure-relief valve and associated shut-off valves in good working order. Empty recovery cylinders are evacuated and, if possible, cooled before recovery occurs. A set of calibrated weighing scales shall be available and in good working order. Hoses shall be complete with leak-free disconnect couplings and in good condition.

All best practices for refrigerant recovery must be followed, including use of a recovery machine designated safe for use with A2L refrigerants. Isolate the system electrically prior to recovery. Ensure that all personal protective equipment is being applied correctly. Ensure that the recovery process is supervised at all times by the qualified servicer. Situate the R-32 cylinder on the scale before recovery takes place. Start the recovery machine and operate in accordance with its instructions. Do not overfill cylinders by more than 80% volume of its allowed liquid charge.

Should electrical components need to be replaced, ensure that the original equipment manufacturer's part or equivalent is used.

Markings and warnings on the unit shall continue to be visible and legible after installation and service. Correct any markings and warnings that are made illegible. When decommissioning a system, all previously mentioned precautions regarding safe refrigerant handling must be followed. Recovered refrigerant shall not be charged into another refrigerating system unless it has been cleaned and checked. Equipment must be labeled, dated, and signed stating that it has been decommissioned and emptied of refrigerant.

ALTITUDE ADJUSTMENT FACTOR TO CALCULATE MINIMUM ROOM AREA

The Indoor equipment mitigation requirements are calculated at sea level. For higher altitudes adjust the minimum room area specified near the Serial Plate by the corresponding altitude adjustment factor shown below. This table is provided as a reference.

Adjusted room area ($A_{min\ adj}$) is the product of the minimum room area specified in the serial plate and the adjustment factor AF, as shown in below formula $A_{min\ adj} = A_{min}$ (serial plate) * AF

Height in meters	Height in feet	Altitude Adjustment Factor (AF)
At sea level	At sea level	1.00
1~200	1~660	1.02
200~400	660~1320	1.03
400~600	1320~1970	1.05
600~800	1970~2630	1.07
800~1000	2630~3290	1.09
1000~1200	3290~3940	1.11
1200~1400	3940~4600	1.13
1400~1600	4600~5250	1.15
1600~1800	5250~5910	1.17
1800~2000	5910~6570	1.19
2000~2200	6570~7220	1.21
2200~2400	7220~7880	1.24
2400~2600	7880~8540	1.26
2600~2800	8540~9190	1.29
2800~3000	9190~9850	1.31
3000~3200	9850~10500	1.34

WARNING

HERMETIC COMPRESSOR ELECTRICAL TERMINAL VENTING CAN BE DANGEROUS. IN CERTAIN CIRCUMSTANCES, THE TERMINAL MAY BE EXPELLED, VENTING THE REFRIGERANT VAPOR AND COMPRESSOR OIL CONTAINED WITHIN THE COMPRESSOR HOUSING AND SYSTEM. BE ALERT FOR SOUNDS OF ARCING (SIZZLING, SPUTTERING, OR POPPING) INSIDE THE COMPRESSOR. IMMEDIATELY GET AWAY IF YOU HEAR THESE SOUNDS AND DISCONNECT ELECTRICAL POWER FROM THE UNIT. NEVER OPERATE THE COMPRESSOR WITHOUT THE TERMINAL COVER SECURED AND PROPERLY IN PLACE OR WITHOUT THE ELECTRICAL PLUG FULLY SEATED AND ENGAGED TO THE TERMINAL POSTS.

IF A TERMINAL IS DAMAGED, ELECTRICALLY OVERLOADED, OR SHORT CIRCUITS TO GROUND, THERE IS A REMOTE POSSIBILITY THAT THE TERMINAL CAN BE SUDDENLY EXPELLED FROM THE TERMINAL HOUSING THEREBY VENTING THE REFRIGERANT AND COMPRESSOR OIL MIXTURE TO ATMOSPHERE.

THIS DISCHARGE CAN BE IGNITED FROM ELECTRICAL ARCING, OR OTHER OPEN SOURCES OF IGNITION, AND CAN CAUSE POTENTIALLY SEVERE OR FATAL INJURY. THIS EVENT IS KNOWN AS "TERMINAL VENTING."

TO REDUCE THE POSSIBILITY OF EXTERNAL IGNITION, ALL OPEN FLAMES OR OTHER HEAT SOURCES MUST BE EXTINGUISHED, AND ALL ELECTRICAL POWER MUST BE TURNED OFF PRIOR TO OPENING THE TERMINAL COVER OR REMOVING THE ELECTRICAL PLUG AND SERVICING THE SYSTEM.

PROPER SEALED SYSTEM EVACUATION IS REQUIRED DURING SERVICING TO MAINTAIN ADEQUATE INTERNAL SYSTEM CLEANLINESS WHILE ELIMINATING CONTAMINATES. BE ALERT FOR SOUNDS OF ARCING (SIZZLING, SPUTTERING, OR POPPING) INSIDE THE COMPRESSOR. IMMEDIATELY GET AWAY FROM THE UNIT IF YOU HEAR THESE SOUNDS AND DISCONNECT ELECTRICAL POWER.

NOTE: NEVER OPERATE THE COMPRESSOR IN A VACUUM OR IN REVERSE OPERATION.

TROUBLESHOOTING INFORMATION

Complaint	No Cooling							Unsatisfactory Cooling					System Operating Pressures				Test Method Remedy
POSSIBLE CAUSE DOTS IN ANALYSIS GUIDE INDICATE "POSSIBLE CAUSE"	System will not start	Compressor will not start - fan runs	Compressor and Condenser Fan will not start	Evaporator fan will not start	Condenser fan will not start	Compressor runs - goes off on overload	Compressor cycles on overload	System runs continuously - little cooling	Too cool and then too warm	Not cool enough on warm days	Certain areas to cool others to warm	Compressor is noisy	Low suction pressure	Low head pressure	High suction pressure	High head pressure	
Power Failure	•																Test Voltage
Blown Fuse	•		•	•													Test Fuse and Replace if open
Loose Connection	•			•	•	•											Inspect Connection - Tighten
Shorted or Broken Wires	•	•	•	•	•	•											Test Circuits with Ohmmeter
Open Overload				•	•												Test Continuity of Overloads
Faulty Control Board	•																Replace Control Board
Faulty Compressor Solenoid	•	•															Replace Compressor Solenoid
Faulty Thermostat	•		•	•					•								Test Continuity of Thermostat and Wiring
Faulty Transformer	•		•														Check Control Circuit with Voltmeter
Shorted or Open Capacitor		•		•	•	•											Test Capacitor
Internal Compressor Overload Open		•															Test Continuity of Overload
Shorted or Grounded Compressor		•				•											Test Motor Windings
Compressor Stuck	•					•											Use Test Cord
Faulty Compressor Contactor	•	•	•			•											Test Continuity of Coil and Contacts
Faulty Fan Relay				•													Test Continuity of Coil and Contacts
Open Control Circuit																	Test Control Circuit with Voltmeter
Low Voltage		•				•	•										Test Voltage
Faulty Evaporator Fan Motor				•									•				Repair or Replace
Shorted or Grounded Fan Motor				•	•											•	Test Motor Windings
Improper Cooling Anticipator									•								Check Resistance of Anticipator
Shortage or Refrigerant							•	•					•	•			Test For Leaks, Add Refrigerant
Restricted Liquid Line							•	•					•	•			Replace Restricted Part
Undersized Liquid Line								•		•			•				Replace Line
Undersized Suction Line													•				Replace Line
Not Enough Air across Indoor Coil								•		•	•		•				Speed Blower, Check Duct Static Pressure
Too Much Air across Indoor Coil															•		Reduce Blower Speed
Overcharge of Refrigerant						•	•					·			•	•	Recover Part of Charge
Noncondensibles							•			•						•	Recover Charge, Evacuate, Recharge
Recirculation of Condensing Air							•			•						•	Remove Obstruction to Air Flow
Infiltration of Outdoor Air								•		•	•						Check Windows, Doors, Vent Fans, Etc.
Improperly Located Thermostat									•								Relocate Thermostat
Air Flow Unbalanced									•		•						Readjust Air Volume Dampers
System Undersized								•		•							Refigure Cooling Load
Broken Internal Parts												•					Replace Compressor
Broken Valves												•					Test Compressor Efficiency
Inefficient Compressor								•						•	•		Test Compressor Efficiency
High Pressure Control Open			•														Reset and Test Control
Unbalanced Power, 3PH		•				•	•										Test Voltage
Wrong Type Expansion Valve						•	•			•							Replace Valve
Expansion Valve Restricted						•	•	•		•			•	•			Replace Valve
Oversized Expansion Valve												•			•		Replace Valve
Undersized Expansion Valve						•	•	•		•			•				Replace Valve
Expansion Valve Bulb Loose												•			•		Tighten Bulb Bracket
Inoperative Expansion Valve						•		•					•				Check Valve Operation
Loose Hold-down Bolts												•					Tighten Bolts

FOR DETAILED SERVICE INFORMATION, REFER TO THE REMOTE CONDENSING UNIT SERVICE MANUAL.

NOTICE

UNITS WITH ROTARY OR RECIPROCATING COMPRESSORS AND NON-BLEED TXV'S REQUIRE A HARD START KIT. EXCEPT COMPRESSOR'S WITH SOLENOID VALVE.

SPLIT SYSTEMS

AIR CONDITIONING AND HEAT PUMP HOMEOWNER'S ROUTINE MAINTENANCE RECOMMENDATIONS

*We strongly recommend a bi-annual maintenance checkup be performed before the heating and cooling seasons begin by a **qualified servicer**.*

REPLACE OR CLEAN FILTER

IMPORTANT NOTE: NEVER OPERATE UNIT WITHOUT A FILTER INSTALLED AS DUST AND LINT WILL BUILD UP ON INTERNAL PARTS RESULTING IN LOSS OF EFFICIENCY, EQUIPMENT DAMAGE AND POSSIBLE FIRE.

An indoor air filter must be used with your comfort system. A properly maintained filter will keep the indoor coil of your comfort system clean. A dirty coil could cause poor operation and/or severe equipment damage.

Your air filter or filters could be located in your furnace, in a blower unit, or in "filter grilles" in your ceiling or walls. The installer of your air conditioner or heat pump can tell you where your filter(s) are, and how to clean or replace them.

Check your filter(s) at least once a month. When they are dirty, replace or clean as required. Disposable type filters should be replaced. Reusable type filters may be cleaned.

You may want to ask your dealer about high efficiency filters. High efficiency filters are available in both electronic and non-electronic types. These filters can do a better job of catching small airborne particles.

COMPRESSOR

The compressor motor is hermetically sealed and does not require additional oiling.

MOTORS

Indoor and outdoor fan motors are permanently lubricated and do not require additional oiling.

CLEAN OUTSIDE COIL (QUALIFIED SERVICER ONLY)

WARNING

HIGH VOLTAGE!
DISCONNECT ALL POWER BEFORE SERVICING OR INSTALLING THIS UNIT. MULTIPLE POWER SOURCES MAY BE PRESENT. FAILURE TO DO SO MAY CAUSE PROPERTY DAMAGE, PERSONAL INJURY OR DEATH.

Air must be able to flow through the outdoor unit of your comfort system. Do not construct a fence near the unit or build a deck or patio over the unit without first discussing your plans with your dealer or other qualified servicer. Restricted airflow could lead to poor operation and/or severe equipment damage.

Likewise, it is important to keep the outdoor coil clean. Dirt, leaves, or debris could also restrict the airflow. If cleaning of the outdoor coil becomes necessary, hire a qualified servicer. Inexperienced people could easily puncture the tubing in the coil. Even a small hole in the tubing could eventually cause a large loss of refrigerant. Loss of refrigerant can cause poor operation and/or severe equipment damage.

Do not use a condensing unit cover to "protect" the outdoor unit during the winter, unless you first discuss it with your dealer. Any cover used must include "breathable" fabric to avoid moisture buildup.

BEFORE CALLING YOUR SERVICER

- Check the thermostat to confirm that it is properly set.
- Wait 15 minutes. Some devices in the outdoor unit or in programmable thermostats will prevent compressor operation for awhile, and then reset automatically. Also, some power companies will install devices which shut off air conditioners for several minutes on hot days. If you wait several minutes, the unit may begin operation on its own.

CAUTION

TO AVOID THE RISK OF EQUIPMENT DAMAGE OR FIRE, INSTALL THE SAME AMPERAGE BREAKER OR FUSE AS YOU ARE REPLACING. IF THE CIRCUIT BREAKER OR FUSE SHOULD OPEN AGAIN WITHIN THIRTY DAYS, CONTACT A QUALIFIED SERVICER TO CORRECT THE PROBLEM.
IF YOU REPEATEDLY RESET THE BREAKER OR REPLACE THE FUSE WITHOUT HAVING THE PROBLEM CORRECTED, YOU RUN THE RISK OF SEVERE EQUIPMENT DAMAGE.

- Check the electrical panel for tripped circuit breakers or open fuses. Reset the circuit breakers or replace fuses as necessary.
- Check the disconnect switch near the indoor furnace or blower to confirm that it is closed.
- Check for obstructions on the outdoor unit. Confirm that it has not been covered on the sides or the top. Remove any obstruction that can be safely removed. If the unit is covered with dirt or debris, call a qualified servicer to clean it.
- Check for blockage of the indoor air inlets and outlets. Confirm that they are open and have not been blocked by objects (rugs, curtains or furniture).
- Check the filter. If it is dirty, clean or replace it.
- Listen for any unusual noise(s), other than normal operating noise, that might be coming from the outdoor unit. If you hear unusual noise(s) coming from the unit, call a qualified servicer.

START-UP CHECKLIST

Condenser / Heat Pump (including all Inverter)					
	Model Number	_____			
	Serial Number	_____			
ELECTRICAL (Outdoor Unit)					
Line Voltage (Measure L1 and L2 Voltage)	L1 - L2	_____			
Secondary Voltage (Measure Transformer Output Voltage) **NOT ALL MODELS**	R - C	_____			
Compressor Amps		_____			
Condenser Fan Amps		_____			
TEMPERATURES (Indoor Unit)					
Return Air Temperature (Dry bulb / Wet bulb)		_____	DB °F	_____	WB °F
Cooling Supply Air Temperature (Dry bulb / Wet bulb)		_____	DB °F	_____	WB °F
Delta T (Difference between Supply and Return Temperatures)		_____	DB °F		
PRESSURES / TEMPERATURES (Outdoor Unit)					
Suction Circuit (Pressure / Suction Line Temperature)	PSIG	_____	TEMP	_____	°F
Liquid Circuit (Pressure / Liquid Temperature)	PSIG	_____	TEMP	_____	°F
Outdoor Air Temperature (Dry bulb / Wet bulb)		_____	DB °F	_____	WB °F
SUPERHEAT / SUBCOOLING	SH	_____	SC	_____	
Line set length in Feet		_____			
Additional Refrigerant Charge Added over Factory Charge (Ounces)		_____			
Additional Checks					
Check wire routings for any rubbing		_____			
Check factory wiring and wire connections.		_____			
Check product for proper clearances as noted by installation instructions		_____			
		_____			
°F to °C formula: (°F - 32) divided by 1.8 = °C	**°C to °F formula: (°C multiplied by 1.8) + 32 = °F**				

CUSTOMER FEEDBACK
We are very interested in all product comments.
Please fill out the feedback form on one of the following links:
Goodman® Brand Products: (http://www.goodmanmfg.com/about/contact-us).
Amana® Brand Products: (http://www.amana-hac.com/about-us/contact-us).
You can also scan the QR code on the right for the product brand you purchased to be directed to the feedback page.

GOODMAN® BRAND

AMANA® BRAND

NOTE: SPECIFICATIONS AND PERFORMANCE DATA LISTED HEREIN ARE SUBJECT TO CHANGE WITHOUT NOTICE.

Quality Makes the Difference!

All of our systems are designed and manufactured with the same high quality standards regardless of size or efficiency. We have designed these units to significantly reduce the most frequent causes of product failure. They are simple to service and forgiving to operate. We use quality materials and components. Finally, every unit is run tested before it leaves the factory. That's why we know. . .**There's No Better Quality**.

Visit our website at www.goodmanmfg.com or www.amana-hac.com for information on:

- Products
- Customer Services
- Contractor Program and Training
- Warranties
- Parts
- Financing Options

19001 Kermier Rd. Waller, TX 77484
www.goodmanmfg.com -or- www.amana-hac.com
© 2025-2026 Daikin Comfort Technologies Manufacturing, Inc.

AMANA HEATING & AIR CONDITIONING ® / TM 2026 Amana. Manufactured under license by Daikin. Limited warranty provided by the manufacturer. All trademarks are the property of their respective owners.