CONDENSING UNIT

HEAT PUMP
INSTALLATION & SERVICE REFERENCE

© 2016-2019, 2021 Goodman Manufacturing Company, L.P.
19001 Kermier Rd., Waller, TX 77484
www.goodmanmfg.com
P/N: IOG-4002D Date: April 2021

Important Safety Instructions

The following symbols and labels are used throughout this manual to indicate immediate or potential safety hazards. It is the owner's and installer's responsibility to read and comply with all safety information and instructions accompanying these symbols. Failure to heed safety information increases the risk of personal injury, property damage, and/or product damage.

WARNING

Only personnel that have been trained to install, adjust, service or repair(hereinafter, "service") the equipment specified in this manual should service the equipment. The manufacturer will not be responsible for any injury or property damage arising from improper service or service procedures. If you service this unit, you assume responsibility for any injury or property damage which may result. In addition, in jurisdictions that require one or more licenses to service the equipment specified in this manual, only licensed personnel should servise the equipment. Improper installation, adjustment, servicing or repair of the equipment specified in this manual, or attempting to install, adjust, service or repair the equipment specified in this manual without proper training may result in product damage, property damage, personal injury or death.

WARNING

HIGH VOLTAGE
DISCONNECT ALL POWER BEFORE SERVICING OR INSTALLING THIS UNIT. MULTIPLE POWER SOURCES MAY BE PRESENT. FAILURE TO DO SO MAY CAUSE PROPERTY DAMAGE, PERSONAL INJURY OR DEATH.

CAUTION

SCROLL EQUIPPED UNITS SHOULD NEVER BE USED TO EVACUATE THE AIR CONDITIONING SUSTEM. VACUUMS THIS LOW CAN CAUSE INTERNAL ELECTRICAL ARCING RESULTING IN A DAMAGED OR FAILED COMPRESSOR.

Shipping Inspection

Always keep the unit upright; laying the unit on its side or top may cause equipment damage. Shipping damage, and subsequent investigation is the responsibility of the carrier. Verify the model number, specifications, electrical characteristics, and accessories are correct prior to installation. The distributor or manufacturer will not accept claims from dealers for transportation damage or installation of incorrectly shipped units.

Codes & Regulations

This product is designed and manufactured to comply with national codes. Installation in accordance with such codes and/or prevailing local codes/regulations is the responsibility of the installer. The manufacturer assumes no responsibility for equipment installed in violation of any codes or regulations. Rated performance is achieved after 20 hours of operation. Rated performance is delivered at the specified airflow. See outdoor unit specification sheet for split system models or product specification sheet for packaged and light commercial models. Specification sheets can be found at www.goodmanmfg.com for Goodman® brand products or www.amana-hac.com for Amana® brand products. Within either website, please select the residential or commercial products menu and then select the submenu for the type of product to be installed, such as air conditioners or heat pumps, to access a list of product pages that each contain links to that model's specification sheet.

The United States Environmental Protection Agency (EPA) has issued various regulations regarding the introduction and disposal of refrigerants. Failure to follow these regulations may harm the environment and can lead to the imposition of substantial fines. Should you have any questions please contact the local office of the EPA.

If replacing a condensing unit or air handler, the system must be manufacturer approved and Air Conditioning, Heating and Refrigeration Institute (AHRI) matched. **NOTE:** Installation of unmatched systems is not allowed.

Outdoor units are approved for operation above 55°F in cooling mode. Operation below 55°F requires the use of an approved low ambient kit. Note: LAKT01 Low ambient kit cannot be used with outdoor units containing ECM motors.

Damage to the unit caused by operating the unit in a structure that is not complete (either as part of new construction or renovation) is not covered under the warranty.

Installation Clearances

Special consideration must be given to location of the condensing unit(s) in regard to structures, obstructions, other units, and any/all other factors that may interfere with air circulation. Where possible, the top of the unit should be completely unobstructed; however, if vertical conditions require placement beneath an obstruction **there should be a minimum of 60 inches between the top of the unit and the obstruction(s).** The specified dimensions meet requirements for air circulation only. Consult all appropriate regulatory codes prior to determining final clearances.

Another important consideration in selecting a location for the unit(s) is the angle to obstructions. Either side adjacent the valves can be placed toward the structure provided the side away from the structure maintains minimum service clearance. Corner installations are strongly discouraged.

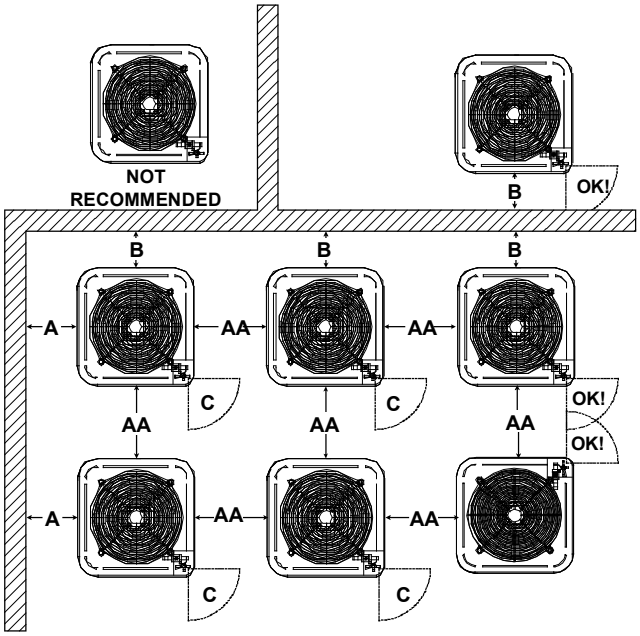

Minimum Airflow Clearance				
Model Type	**A**	**B**	**C**	**AA**
Residential	10"	10"	18"	20"
Light Commercial	12"	12"	18"	24"

This unit can be located at ground floor level or on flat roofs. At ground floor level, the unit must be on a solid, level foundation that will not shift or settle. To reduce the possibility of sound transmission, the foundation slab should not be in contact with or be an integral part of the building foundation. Ensure the foundation is sufficient to support the unit. A concrete slab raised above ground level provides a suitable base.

Rooftop Installations

If it is necessary to install this unit on a roof structure, ensure the roof structure can support the weight and that proper consideration is given to the weather-tight integrity of the roof. Since the unit can vibrate during operation, sound vibration transmission should be considered when installing the unit. Vibration absorbing pads or springs can be installed between the condensing unit legs or frame and the roof mounting assembly to reduce noise vibration.

NOTE: These units require special location consideration in areas of heavy snow accumulation and/or areas with prolonged continuous subfreezing temperatures. Heat pump unit bases have cutouts under the outdoor coil that permit drainage of frost accumulation. Situate the unit to permit free unobstructed drainage of the defrost water and ice.

In more severe weather locations, it is recommended that the unit be elevated to allow unobstructed drainage and air flow. The following elevation minimums are recommended:

Design Temperature	Suggested Minimum Elevation
+15° and above	2 1/2"
-5° to +14°	8"
below -5°	12"

Safe Refrigerant Handling

While these items will not cover every conceivable situation, they should serve as a useful guide.

WARNING

TO AVOID POSSIBLE INJURY, EXPLOSION OR DEATH, PRACTICE SAFE HANDLING OF REFRIGERANTS.

WARNING

REFRIGERANTS ARE HEAVIER THAN AIR. THEY CAN "PUSH OUT" THE OXYGEN IN YOUR LUNGS OR IN ANY ENCLOSED SPACE. TO AVOID POSSIBLE DIFFICULTY IN BREATHING OR DEATH:

- **NEVER PURGE REFRIGERANT INTO AN ENCLOSED ROOM OR SPACE. BY LAW, ALL REFRIGERANTS MUST BE RECLAIMED.**
- **IF AN INDOOR LEAK IS SUSPECTED, THROUGHLY VENTILATE THE AREA BEFORE BEGINNING WORK.**
- **LIQUID REFRIGERANT CAN BE VERY COLD. TO AVOID POSSIBLE FROSTBITE OR BLINDNESS, AVOID CONTACT AND WEAR GLOVES AND GOGGLES. IF LIQUID REFRIGERANT DOES CONTACT YOUR SKIN OR EYES, SEEK MEDICAL HELP IMMEDIATELY.**
- **ALWAYS FOLLOW EPA REGULATIONS. NEVER BURN REFRIGERANT, AS POISONOUS GAS WILL BE PRODUCED.**

WARNING

TO AVOID POSSIBLE EXPLOSION:

- **NEVER APPLY FLAME OR STEAM TO A REFRIGERANT CYLINDER. IF YOU MUST HEAT A CYLINDER FOR FASTER CHARGING, PARTIALLY IMMERSE IT IN WARM WATER.**
- **NEVER FILL A CYLINDER MORE THAN 80% FULL OF LIQUID REFRIGERANT.**
- **NEVER ADD ANYTHING OTHER THAN R-22 TO AN R-22 CYLINDER OR R-410A TO AN R-410A CYLINDER. THE SERVICE EQUIPMENT USED MUST BE LISTED OR CERTIFIED FOR THE TYPE OF REFRIGERANT USED.**
- **STORE CYLINDERS IN A COOL, DRY PLACE. NEVER USE A CYLINDER AS A PLATFORM OR A ROLLER.**

WARNING

TO AVOID POSSIBLE EXPLOSION, USE ONLY RETURNABLE (NOT DISPOSABLE) SERVICE CYLINDERS WHEN REMOVING REFRIGERANT FROM A SYSTEM:
- **ENSURE THE CYLINDER IS FREE OF DAMAGE WHICH COULD LEAD TO A LEAK OR EXPLOSION.**
- **ENSURE THE HURDOSTATIC TEST DATE DOES NOT EXCEED 5 YEARS.**
- **ENSURE THE PRESSURE RAITING MEETS OR EXCEEDS 400 PSIG.**

WHEN IN DOUBT, DO NOT USE CYLINDER.

Refrigerant Lines

CAUTION

THE COMPRESSOR POE OIL FOR R-410A UNITS IS EXTREMELY SUSCEPTIBLE TO MOISTURE ABSORPTION AND COULD CAUSE COMPRESSOR FAILURE. DO NOT LEAVE SYSTEM OPEN TO ATMOSPHERE ANY LONGER THAN NECESSARY FOR INSTLLATION.

Use only refrigerant grade (dehydrated and sealed) copper tubing to connect the condensing unit with the indoor evaporator. After cutting the tubing, install plugs to keep refrigerant tubing clean and dry prior to and during installation. Tubing should always be cut square keeping ends round and free from burrs. Clean the tubing to prevent contamination.

Do NOT let refrigerant lines come in direct contact with plumbing, ductwork, floor joists, wall studs, floors, and walls. When running refrigerant lines through a foundation or wall, openings should allow for sound and vibration absorbing material to be placed or installed between tubing and foundation. Any gap between foundation or wall and refrigerant lines should be filled with a pliable silicon-based caulk, RTV or a vibration damping material. Avoid suspending refrigerant tubing from joists and studs with rigid wire or straps that would come in contact with the tubing. Use an insulated or suspension type hanger. Keep both lines separate and always insulate the suction line.

These sizes are recommended for line lengths of 79 feet or less to obtain optimum performance. For alternate line sizing options or runs of more than 79 feet, refer to TP-107 Long Line Set Application R-410A, or contact your distributor for assistance.

RECOMMENDED INTERCONNECTING TUBING (Ft)						
Cond Unit Tons	0-24		25-49		50-79*	
	Line Diameter (In. OD)					
	Suct	Liq	Suct	Liq	Suct	Liq
1 1/2	5/8	1/4	3/4	3/8	3/4	3/8
2	5/8	1/4	3/4	3/8	3/4	3/8
2 1/2	5/8	1/4	3/4	3/8	7/8	3/8
3	3/4	3/8	7/8	3/8	1 1/8	3/8
3 1/2	7/8	3/8	1 1/8	3/8	1 1/8	3/8
4	7/8	3/8	1 1/8	3/8	1 1/8	3/8
5	7/8	3/8	1 1/8	3/8	1 1/8	3/8

* Lines greater than 79 feet in length or vertical elevation changes more than 50 feet **refer to the TP-107 R-410A Long Line Set Application Guidelines or contact your distributor for assistance.**

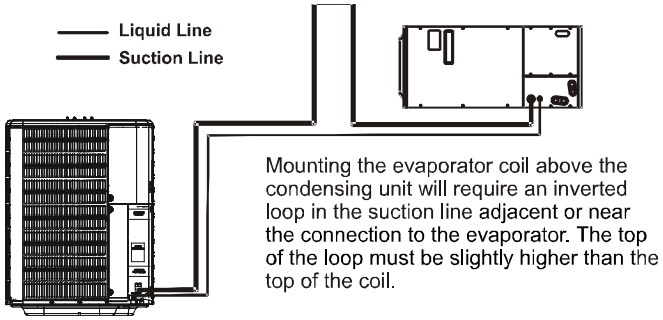

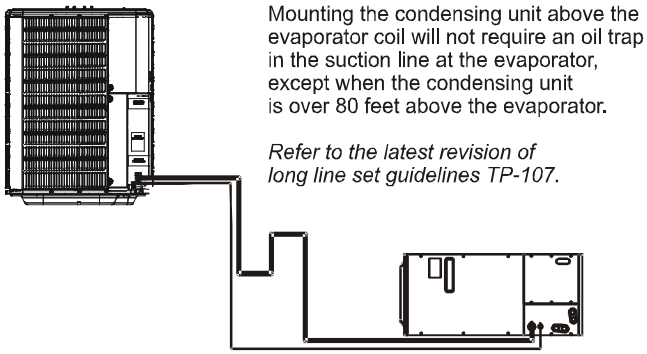

Insulation is necessary to prevent condensation from forming and dropping from the suction line. Armflex (or satisfactory equivalent) with 3/8” min. wall thickness is recommended. In severe conditions (hot, high humidity areas) 1/2” insulation may be required. Insulation must be installed in a manner which protects tubing from damage and contamination.

Existing Line Sets

Where possible, drain as much residual compressor oil from existing systems, lines, and traps; pay close attention to low areas where oil may collect. Use of an approved flushing agent is recommended followed by a nitrogen purge to remove any remaining flushing agent from the lines or indoor coil. Replacement of indoor coil is recommended.

NOTE: If using existing indoor coil and changing refrigerant types, ensure the indoor coil and metering device are compatible with the type of refrigerant being used. If new indoor coil is required check spec sheet or AHRI for approved coil. If system is being replaced due to compressor electrical failure, assume acid is in system. Refer to Service Procedure S-115 Compressor Burnout in service manual for clean-up procedure.

Burying Refrigerant Lines

If burying refrigerant lines can not be avoided, use the following checklist.

1. Insulate liquid and suction lines separately.
2. Enclose all underground portions of the refrigerant lines in waterproof material (conduit or pipe) sealing the ends where tubing enters/exits the enclosure.
3. If the lines must pass under or through a concrete slab, ensure lines are adequately protected and sealed.

Refrigerant Line Connections

IMPORTANT

To avoid overheating the service valve, TXV valve, or filter drier while brazing, wrap the component with a wet rag, or use a thermal heat trap compound. Be sure to follow the manufacturer's instruction when using the heat trap compound. Note: Remove Schrader valves from service valves before brazing tubes to the valves. Use a brazing alloy of 2% minimum silver content. Do not use flux.

Torch heat required to braze tubes of various sizes is proportional to the size of the tube. Tubes of smaller size require less heat to bring the tube to brazing temperature before adding brazing alloy. Applying too much heat to any tube can melt the tube. Service personnel must use the appropriate heat level for the size of the tube being brazed. Note: The use of a heat shield when brazing is recommended to avoid burning the serial plate or the finish on the unit.

1. The ends of the refrigerant lines must be cut square, deburred, cleaned, and be round and free from nicks or dents. Any other condition increases the chance of a refrigerant leak.
2. "Sweep" the refrigerant line with nitrogen or inert gas during brazing to prevent the formation of copper-oxide inside the refrigerant lines. The POE oils used in R-410A applications will clean any copper-oxide present from the inside of the refrigerant lines and spread it throughout the system. This may cause a blockage or failure of the metering device.
3. After brazing, quench the joints with water or a wet cloth to prevent overheating of the service valve.
4. Ensure the filter drier paint finish is intact after brazing. If the paint of the steel filter drier has been burned or chipped, repaint or treat with a rust preventative. This is especially important on suction line filter driers which are continually wet when the unit is operating.

NOTE: Be careful not to kink or dent refrigerant lines. Kinked or dented lines will cause poor performance or compressor damage.

Do NOT make final refrigerant line connection until plugs are removed from refrigerant tubing.

NOTE: Before brazing, verify indoor piston size by checking the piston kit chart packaged with indoor unit.

Leak Testing (Nitrogen or Nitrogen-Traced)

WARNING

TO AVOID THE RISK OF FIRE OR EXPLOSION, NEVER USE OXYGEN, HIGH PRESSURE AIR OR FLAMMABLE GASES FOR LEAK TESTING OF A REFRIGERATION SYSTEM.

WARNING

TO AVOID POSSIBLE EXPLOSION, THE LINE FROM THE NITROGEN CYLINDER MUST INCLUDE A PRESSURE REGULATOR AND A PRESSURE RELIEF VALVE. THE PRESSURE RELIEF VALVE MUST BE SET TO OPEN AT NO MORE THAN 150 PSIG.

Pressure test the system using dry nitrogen and soapy water to locate leaks. If you wish to use a leak detector, charge the system to 10 psi using the appropriate refrigerant then use nitrogen to finish charging the system to working pressure then apply the detector to suspect areas. If leaks are found, repair them. After repair, repeat the pressure test. If no leaks exist, proceed to system evacuation.

System Evacuation

Condensing unit liquid and suction valves are closed to contain the charge within the unit. The unit is shipped with the valve stems closed and caps installed. **Do not open valves until the system is evacuated.**

WARNING

REFRIGERANT UNDER PRESSURE!
FAILURE TO FOLLOW PROPER PROCEDURES MAY CAUSE PROPERTY DAMAGE, PERSONAL INJURY OR DEATH.

NOTE: Scroll compressors should never be used to evacuate or pump down a heat pump or air conditioning system.

CAUTION

PROLONGED OPERATION AT SUCTION PRESSURES LESS THAN 20 PSIG FOR MORE THAN 5 SECONDS WILL RESULT IN OVERHEATING OF THE SCROLLS AND PERMANENT DAMAGE TO THE SCROLL TIPS, DRIVE BEARINGS AND INTERNAL SEAL.

1. Connect the vacuum pump with 250 micron capability to the service valves.
2. Evacuate the system to 250 microns or less using suction **and** liquid service valves. Using both valves is necessary as some compressors create a mechanical seal separating the sides of the system.
3. Close pump valve and hold vacuum for 10 minutes. Typically pressure will rise during this period.

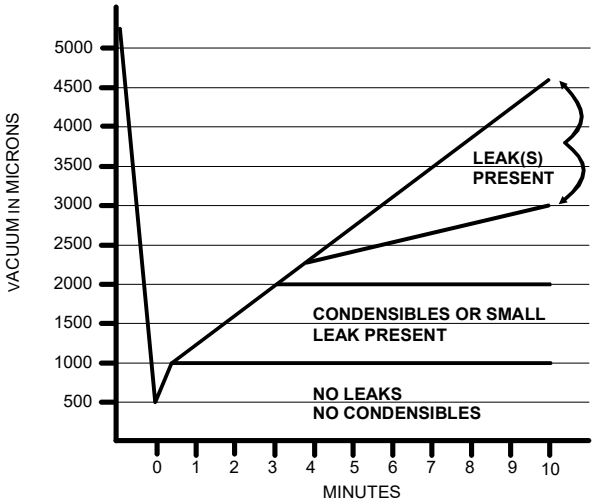

- If the pressure rises to 1000 microns or less and remains steady the system is considered leak-free; proceed to startup.
- If pressure rises above 1000 microns but holds steady below 2000 microns, moisture and/or noncondensibles may be present or the system may have a small leak. Return to step 2: If the same result is encountered check for leaks as previously indicated and repair as necessary then repeat evacuation.
- If pressure rises above 2000 microns, a leak is present. Check for leaks as previously indicated and repair as necessary then repeat evacuation.

Electrical Connections

WARNING

HIGH VOLTAGE

DISCONNECT ALL POWER BEFORE SERVICING. MULTIPLE POWER SOURCES MAY BE PRESENT. FAILURE TO DO SO MAY CAUSE PROPERTY DAMAGE, PERSONAL INJURY OR DEATH DUE TO ELECTRIC SHOCK. WIRING MUST CONFORM WITH NEC OR CEC AND ALL LOCAL CODES. UNDERSIZED WIRES COULD CAUSE POOR EQUIPMENT PERFORMANCE, EQUIPMENT DAMAGE OR FIRE.

WARNING

TO AVOID THE RISK OF FIRE OR EQUIPMENT DAMAGE, USE COPPER CONDUCTORS.

NOTICE

UNITS WIL RECIPROCATING OR ROTARY COMPRESSORS AND NON-BLEED TXV'S REQUIRE A HARD START KIT.

The condensing unit rating plate lists pertinent electrical data necessary for proper electrical service and overcurrent protection. Wires should be sized to limit voltage drop to 2% (max.) from the main breaker or fuse panel to the condensing unit. Consult the NEC, CEC, and all local codes to determine the correct wire gauge and length.

Local codes often require a disconnect switch located near the unit; do not install the switch on the unit. Refer to the installation instructions supplied with the indoor furnace/air handler for specific wiring connections and indoor unit configuration. Likewise, consult the instructions packaged with the thermostat for mounting and location information.

Overcurrent Protection

The following overcurrent protection devices are approved for use.

- Time delay fuses
- HACR type circuit breakers

These devices have sufficient time delay to permit the motor-compressor to start and accelerate its load.

Three Phase Compressor Rotation

CAUTION

USE CARE WHEN HANDLINGSCROLL COMPRESSORS. DOME TEMPERATURES COULD BE HOT.

Three phase compressors are power phase dependent and can rotate in either direction.

Verify proper rotation for three phase compressors by ensuring the suction pressure drops and discharge pressure rises when the compressor is energized. **NOTE:** When operated in reverse, a three phase scroll compressors is noisier and its current draw substantially reduced compared to marked values.

To correct, disconnect power and switch any two leads at the unit contactor and re-observe.

High Voltage Connections

Route power supply and ground wires through the high voltage port and terminate in accordance with the wiring diagram provided inside the control panel cover.

Low Voltage Connections

The indoor transformer must supply 24 volt AC low voltage power to the outdoor section for the control wiring. Cooling only units require 25VA minimum and heat pump units require 40VA minimum. Low voltage wiring for two-stage units depends on the thermostat used and the number of control wires between the indoor unit and the condensing unit. Route control wires through the low voltage port and terminate in accordance with the wiring diagram provided inside the control panel cover.

SYSTEM COMPOSITE DIAGRAM - ALL SIZES (EXCEPT 5T 16 SEER) HEAT PUMPS - 10 KW & BELOW

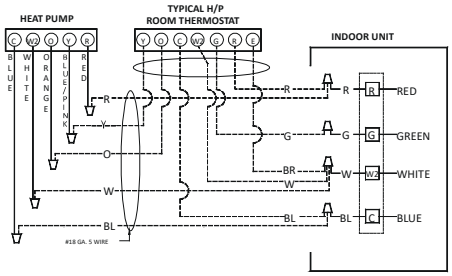

SYSTEM COMPOSITE DIAGRAM - ALL SIZES (EXCEPT 5T 16 SEER) HEAT PUMPS - ABOVE 10 KW

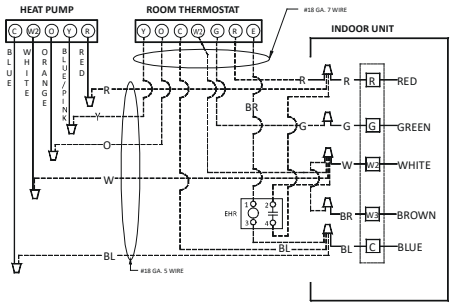

NOTES:
1) TERMINAL BLOCK MARKINGS ARE FOR GOODMAN/AMANA AIR HANDLERS.

NOMENCLATURE
EHR -EMERGENCY HEAT RELAY (OPTIONAL)

COLOR CODES
BL-- BLUE
BL/PK--BLUE/PINK STRIPE
BR--BROWN
GR--GREEN
OR--ORANGE
RD--RED
WH-WHITE
Y--YELLOW

SYSTEM COMPOSITE DIAGRAM - 5T 16 SEER ONLY HEAT PUMPS - 10 KW & BELOW

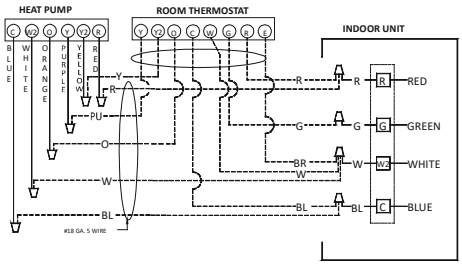

SYSTEM COMPOSITE DIAGRAM - 5T 16 SEER ONLY HEAT PUMPS - ABOVE 10 KW

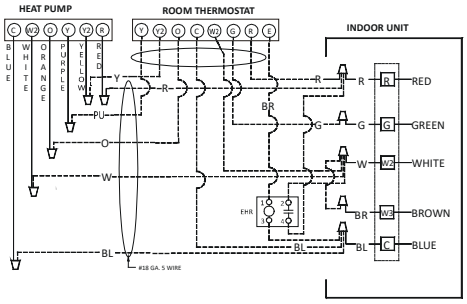

NOTES:
1) TERMINAL BLOCK MARKINGS ARE FOR GOODMAN/AMANA AIR HANDLERS.

NOMENCLATURE
EHR -EMERGENCY HEAT RELAY (OPTIONAL)

COLOR CODES
BL-- BLUE
BL/PK--BLUE/PINK STRIPE
BR--BROWN
GR--GREEN
OR--ORANGE
PU--PURPLE
RD--RED
WH-WHITE
Y--YELLOW

Thermostat
with Low Voltage Wires to Heat Pump Unit

System Start Up

NOTE: Units with crankcase heaters should have high voltage power energized for 24 hours prior to start up.

Heat pumps are equipped with a time/temperature defrost control with field selectable defrost intervals of 30, 60, or 90 minutes. This setting should be adjusted at this time if needed. The defrost control also has SmartShift™ technology, which delays compressor operation at defrost initiation and termination. If disabling this function is desired, move the jumper from “DLY” to “NORM” on the defrost control

Adequate refrigerant charge for the matching HSVTC evaporator coil and 15 feet of lineset is supplied with the condensing unit. If using evaporator coils other than HSVTC coil, it may be necessary to add or remove refrigerant to attain proper charge. If line set exceeds 15 feet in length, refrigerant should be added at .6 ounces per foot of liquid line.

NOTE: Charge should always be checked using superheat when using a piston and subcooling when using TXV equipped indoor coil to verify proper charge.

Open the suction service valve first! If the liquid service valve is opened first, oil from the compressor may be drawn into the indoor coil TXV, restricting refrigerant flow and affecting operation of the system.

CAUTION

POSSIBLE REFRIGERANT LEAK
TO AVOID A POSSIBLE REFRIGERANT LEAK, OPEN THE SERVICE VALVES UNTIL THE TOP OF THE STEM IS 1/8” FROM THE RETAINER.

When opening valves with retainers, open each valve only until the top of the stem is 1/8” from the retainer. To avoid loss of refrigerant, DO NOT apply pressure to the retainer. When opening valves without a retainer remove service valve cap and insert a hex wrench into the valve stem and back out the stem by turning the hex wrench counterclockwise. Open the valve until it contacts the rolled lip of the valve body.

NOTE: These are not back-seating valves. It is not necessary to force the stem tightly against the rolled lip.

After the refrigerant charge has bled into the system, open the liquid service valve. The service valve cap is the secondary seal for the valve and must be properly tightened to prevent leaks. Make sure cap is clean and apply refrigerant oil to threads and sealing surface on inside of cap. Tighten cap finger-tight and then tighten additional 1/6 of a turn (1 wrench flat), or to the following specification, to properly seat the sealing surfaces.

1. 3/8” valve to 5 - 10 in-lbs
2. 5/8” valve to 5 - 20 in-lbs
3. 3/4” valve to 5 - 20 in-lbs
4. 7/8” valve to 5 - 20 in-lbs

Do not introduce liquid refrigerant from the cylinder into the crankcase of the compressor as this may damage the compressor.

1. Break vacuum by fully opening liquid and suction base valves.
2. Set thermostat to call for cooling. Check indoor and outdoor fan operation and allow system to stabilize for 10 minutes for fixed orifices and 20 minutes for expansion valves.

Charge Verification

WARNING

REFRIGERANT UNDER PRESSURE!

• DO NOT OVERCHARGE SYSTEM WITH REFRIGERANT.
• DO NOT OPERATE UNIT IN A VACUUM OR AT NEGATIVE PRESSURE.
FAILURE TO FOLLOW PROPER PROCEDURES MAY CAUSE PROPERTY DAMAGE, PERSONAL INJURY OR DEATH.

CAUTION

USE REFRIGERANT CERTIFIED TO AHRI STANDARDS. USED REFRIGERANT MAY CAUSE COMPRESSOR DAMAGE. MOST PORTABLE MACHINES CANNOT CLEAN USED REFRIGERANT TO MEET AHRI STANDARDS.

NOTICE

VIOLATION OF EPA REGULATIONS MAY RESULT IN FINES OR OTHER PENALTIES.

CAUTION

DAMAGE TO THE UNIT CAUSED BY OPERATING THE COMPRESSOR WITH THE SUCTION VALVE CLOSED IS NOT COVERED UNDER THE WARRANTY AND MAY CAUSE SERIOUS COMPRESSOR DAMAGE.

Final Charge Adjustment

The outdoor temperature must be 60°F or higher. Set the room thermostat to COOL, fan switch to AUTO, and set the temperature control well below room temperature.

Purge gauge lines. Connect service gauge manifold to liquid (small) service port and true suction access port. Run the system (on low stage for two-stage units) for 10 minutes to allow pressures to stabilize, then check subcooling and/or superheat as detailed in the following sections.

Superheat = Suct. Line Temp. - Sat. Suct. Temp.

Subcooling = Sat. Liquid Temp. - Liquid Line Temp.

CAUTION

TO PREVENT PERSONAL INJURY, CAREFULLY CONNECT AND DISCONNECT MANIFOLD GAUGE HOSES. ESCAPING LIQUID REFRIGERANT CAN CAUSE BURNS. DO NOT VENT REFRIGERANT INTO THE ATMOSPHERE. RECOVER ALL REFRIGERANT DURING SYSTEM REPAIR AND BEFORE FINAL UNIT DISPOSAL.

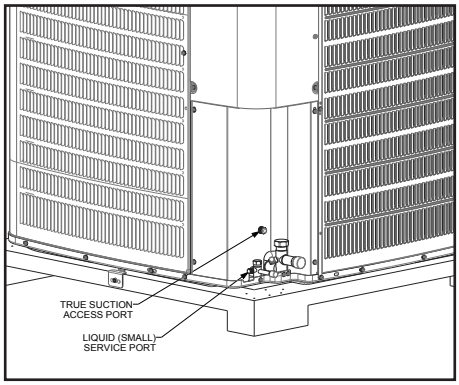

SYSTEM SUPERHEAT (+/- 1°F)

Outdoor Dry Bulb Temperature, °F	Indoor Wet Bulb Temperature, °F								
	55	57	59	61	63	65	67	69	71
60	10	13	17	20	23	26	29	30	31
65	8	11	14	16	19	22	26	27	29
70	5	8	10	13	15	19	23	24	25
75	---	---	6	9	11	15	20	21	23
80	---	---	---	---	7	12	17	18	20
85	---	---	---	---	---	8	13	15	16
90	---	---	---	---	---	7	10	11	13
95	---	---	---	---	---	---	7	8	10
100	---	---	---	---	---	---	---	7	8
105	---	---	---	---	---	---	---	---	7
110	---	---	---	---	---	---	---	---	---
115	---	---	---	---	---	---	---	---	---

SUPERHEAT FORMULA = SUCT. LINE TEMP. - SAT. SUCT. TEMP.

SATURATED SUCTION PRESSURE TEMPERATURE CHART		
SUCTION PRESSURE	SATURATED SUCTION TEMPERATURE ºF	
PSIG	R-22	R-410A
50	26	1
52	28	3
54	29	4
56	31	6
58	32	7
60	34	8
62	35	10
64	37	11
66	38	13
68	40	14
70	41	15
72	42	16
74	44	17
76	45	19
78	46	20
80	48	21
85	50	24
90	53	26
95	56	29
100	59	31
110	64	36
120	69	41
130	73	45
140	78	49
150	83	53
160	86	56
170	90	60

SATURATED LIQUID PRESSURE TEMPERATURE CHART		
LIQUID PRESSURE	SATURATED LIQUID TEMPERATURE ºF	
PSIG	R-22	R-410A
200	101	70
210	105	73
220	108	76
225	110	78
235	113	80
245	116	83
255	119	85
265	121	88
275	124	90
285	127	92
295	130	95
305	133	97
325	137	101
355	144	108
375	148	112
405	155	118
415	157	119
425	n/a	121
435	n/a	123
445	n/a	125
475	n/a	130
500	n/a	134
525	n/a	138
550	n/a	142
575	n/a	145
600	n/a	149
625	n/a	152

NOTE: SPECIFICATIONS AND PERFORMANCE DATA LISTED HEREIN ARE SUBJECT TO CHANGE WITHOUT NOTICE.

Fixed Orifice

1. Temporarily install a thermometer 4-6” from the compressor on the suction line. Ensure the thermometer makes adequate contact and is insulated for best possible readings.
2. Measure pressure using service gauge manifold connected to true suction access port. (Superheat is saturation temperature from the pressure measurement subtracted from the actual tube temperature.)
3. Refer to the superheat table provided for proper system superheat. Add charge to lower superheat or recover charge to raise superheat.

Expansion Valve System

Charge by Subcooling: Applicable to both Adjustable and Non-adjustable TXV

SUBCOOLING FORMULA = SATURATED LIQUID LINE TEMPERATURE - LIQUID LINE TEMPERATURE

NOTE: When charging unit with two-stage compressor, charge unit at low stage.

1. Purge the gauge lines and connect the service gauge manifold to the liquid (small) service port and true suction access port.
2. Clamp a pipe clamp thermometer on the liquid line near the liquid line service valve.
   a. Ensure the thermometer makes adequate contact to obtain the best possible readings.
   b. The temperature read with the thermometer should be lower than the saturated condensing temperature.
3. Measure pressure using service gauge manifold connected to the liquid (small) service port. Refer to the chart above to obtain saturated temperature corresponding to the measured pressure.
4. The difference between the saturated condensing temperature and the recorded liquid line temperature is the liquid Subcooling value.
5. TXV-based systems should have a Subcooling value of 8°F +/- 1°F. In two-stage compressor systems, targeted Subcool value is 6°F +/- 1°F.
6. **Add** refrigerant to **increase** Subcooling and remove refrigerant to **decrease** Subcooling.

Adjust Superheat: Only Applicable to Adjustable TXV.

Superheat can also be utilized to best verify charge levels with an adjustable TXV and make adjustments when needed in unique applications due to refrigerant line length, differences in height between the indoor and outdoor unit and refrigerant tubing sizes. These adjustments should only be performed by qualified service personnel.

Advanced Adjustment Recommendations

SUPERHEAT FORMULA = SUCTION LINE TEMPERATURE - SATURATED SUCTION TEMPERATURE

1. Clamp a pipe clamp thermometer 4-6” from compressor on suction line at the outdoor unit.
   a. Ensure the thermometer makes adequate contact for the best possible readings.
   b. The temperature read with the thermometer should be higher than the saturated suction temperature.
2. Measure the pressure using service gauge manifold connected to the true suction access port. Refer to the chart above to obtain saturated temperature corresponding to the measured pressure.
3. The difference between the saturated suction temperature and the recorded suction line temperature is the Superheat value.
4. TXV-based systems should have a Superheat value of 8°F +/- 1°F.
5. Adjust Superheat by turning the TXV valve stem **clockwise** to **increase** and **counterclockwise** to **decrease**.
   a. If Subcooling and Superheat are low, **adjust** the TXV to 8°F +/- 1°F superheat, and then check Subcooling.
   b. If Subcooling is low and Superheat is high, **add** charge to **raise** Subcooling to 8°F +/- 1°F then check Superheat. In two-stage compressor systems, targeted Subcool value is 6°F +/- 1°F.
   c. If Subcooling and Superheat are high, **adjust** the TXV valve to 8°F +/- 1°F Superheat, then check the Subcooling value.
   d. If Subcooling is high and Superheat is low, **adjust** the TXV valve to 8°F +/- 1°F Superheat and **remove** charge to **lower** the Subcooling to 8°F +/- 1°F. In two-stage compressor systems, targeted Subcool value is 6°F +/- 1°F.

NOTE: **DO NOT** adjust the charge based exclusively on suction pressure unless for general charging in the case of a gross undercharge.

NOTE: Check the Schrader ports for leaks and tighten valve cores if necessary. Install caps finger-tight.

Heat Pump - Heating Cycle

The proper method of charging a heat pump in the heat mode is by weight with the additional charge adjustments for line size, line length, and other system components. For best results, on outdoor units with TXVs, superheat should be 5°F +/- 1°F at 4-6” from the compressor. **NOTE: In system with TWO-stage compressor, charge at low stage. For best results adjust OD TXV to, 4°F +/- 1°F superheat and subcool below 40°F at 4-6” from the compressor.**

Make final charge adjustments in the cooling cycle.

Troubleshooting Information

Complaint	No Cooling							Unsatisfactory Cooling/Heating								System Operating Pressures				Test Method Remedy
POSSIBLE CAUSE DOTS IN ANALYSIS GUIDE INDICATE "POSSIBLE CAUSE" SYMPTOM	System will not start	Compressor will not start - fan runs	Comp. and Cond. Fan will not start	Evaporator fan will not start	Condenser fan will not start	Compressor runs - goes off on overload	Compressor cycles on overload	System runs continuously - little cooling/htg	Too cool and then too warm	Not cool enough on warm days	Certain areas too cool, others too warm	Compressor is noisy	System runs - blows cold air in heating	Unit will not terminate defrost	Unit will not defrost	Low suction pressure	Low head pressure	High suction pressure	High head pressure	
Power Failure	●																			Test Voltage
Blown Fuse	●		●	●																Inspect Fuse Size & Type
Unbalanced Power, 3PH		●				●	●													Test Voltage
Loose Connection	●			●		●														Inspect Connection - Tighten
Shorted or Broken Wires	●	●	●	●	●	●														Test Circuits With Ohmmeter
Open Fan Overload				●	●															Test Continuity of Overload
Faulty Thermostat	●		●	●					●											Test Continuity of Thermostat & Wiring
Faulty Transformer	●		●																	Check Control Circuit with Voltmeter
Shorted or Open Capacitor		●		●	●	●	●													Test Capacitor
Internal Compressor Overload Open		●											♦							Test Continuity of Overload
Shorted or Grounded Compressor		●				●														Test Motor Windings
Compressor Stuck		●				●	●						♦							Use Test Cord
Faulty Compressor Contactor			●		●	●														Test Continuity of Coil & Contacts
Faulty Fan Relay				●																Test Continuity of Coil And Contacts
Open Control Circuit				●																Test Control Circuit with Voltmeter
Low Voltage		●				●	●													Test Voltage
Faulty Evap. Fan Motor				●												●			♦	Repair or Replace
Shorted or Grounded Fan Motor					●														●	Test Motor Windings
Improper Cooling Anticipator							●		●											Check Resistance of Anticipator
Shortage of Refrigerant							●	●					♦			●	●			Test For Leaks, Add Refrigerant
Restricted Liquid Line							●	●								●	●		●	Remove Restriction, Replace Restricted Part
Open Element or Limit on Elec. Heater								♦					♦							Test Heater Element and Controls
Dirty Air Filter								●		●	●					●			♦	Inspect Filter-Clean or Replace
Dirty Indoor Coil								●		●	●					●			♦	Inspect Coil - Clean
Not enough air across Indoor Coil								●		●	●					●			♦	Check Blower Speed, Duct Static Press, Filter
Too much air across Indoor Coil																	♦	●		Reduce Blower Speed
Overcharge of Refrigerant						●	●					●	♦					●	●	Recover Part of Charge
Dirty Outdoor Coil						●	●			●						♦			●	Inspect Coil - Clean
Noncondensibles							●			●			♦						●	Recover Charge, Evacuate, Recharge
Recirculation of Condensing Air							●			●									●	Remove Obstruction to Air Flow
Infiltration of Outdoor Air								●		●	●									Check Windows, Doors, Vent Fans, Etc.
Improperly Located Thermostat						●			●											Relocate Thermostat
Air Flow Unbalanced									●		●									Readjust Air Volume Dampers
System Undersized								●		●										Refigure Cooling Load
Broken Internal Parts												●	♦							Replace Compressor
Broken Valves								●				●					●	●		Test Compressor Efficiency
Inefficient Compressor								●					♦				●	●		Test Compressor Efficiency
Wrong Type Expansion Valve						●	●	●		●						●	●		♦	Replace Valve
Expansion Device Restricted						●	●	●		●						●	●		●	Remove Restriction or Replace Expansion Device
Oversized Expansion Valve								●											●	Replace Valve
Undersized Expansion Valve						●	●	●		●						●				Replace Valve
Expansion Valve Bulb Loose												●						●		Tighten Bulb Bracket
Inoperative Expansion Valve						●		●								●				Check Valve Operation
Loose Hold-down Bolts												●								Tighten Bolts
Faulty Reversing Valve						●							♦	♦	♦		♦	♦	♦	Replace Valve or Solenoid
Faulty Defrost Control					●								♦	♦	♦	♦	♦		♦	Test Control
Faulty Defrost Thermostat													♦	♦	♦	♦	♦	♦	♦	Test Defrost Thermostat
Flowrator Not Seating Properly								●									●	●		Check Flowrator & Seat or Replace Flowrator

● Cooling or Heating Cycle (Heat Pump) ♦ Heating Cycle Only (Heat Pump)

For detailed service information refer to the Remote Condensing Unit Service manual.

NOTICE

UNITS WITH ROTARY OR RECIPROCATING COMPRESSORS AND NON-BLEED TXV'S REQUIRE A HARD START KIT.

SPLIT SYSTEMS

AIR CONDITIONING AND HEAT PUMP HOMEOWNER'S ROUTINE MAINTENANCE RECOMMENDATIONS

*We strongly recommend a bi-annual maintenance checkup be performed before the heating and cooling seasons begin by a **qualified servicer**.*

Replace or Clean Filter

IMPORTANT NOTE: Never operate unit without a filter installed as dust and lint will build up on internal parts resulting in loss of efficiency, equipment damage and possible fire.

An indoor air filter must be used with your comfort system. A properly maintained filter will keep the indoor coil of your comfort system clean. A dirty coil could cause poor operation and/or severe equipment damage.

Your air filter or filters could be located in your furnace, in a blower unit, or in "filter grilles" in your ceiling or walls. The installer of your air conditioner or heat pump can tell you where your filter(s) are, and how to clean or replace them.

Check your filter(s) at least once a month. When they are dirty, replace or clean as required. Disposable type filters should be replaced. Reusable type filters may be cleaned.

You may want to ask your dealer about high efficiency filters. High efficiency filters are available in both electronic and non-electronic types. These filters can do a better job of catching small airborne particles.

Compressor

The compressor motor is hermetically sealed and does not require additional oiling.

Motors

Indoor and outdoor fan motors are permanently lubricated and do not require additional oiling.

Clean Outside Coil (Qualified Servicer Only)

WARNING

HIGH VOLTAGE

DISCONNECT ALL POWER BEFORE SERVICING OR INSTALLING THIS UNIT. MULTIPLE POWER SOURCES MAY BE PRESENT. FAILURE TO DO SO MAY CAUSE PROPERTY DAMAGE, PERSONAL INJURY OR DEATH.

Air must be able to flow through the outdoor unit of your comfort system. Do not construct a fence near the unit or build a deck or patio over the unit without first discussing your plans with your dealer or other qualified servicer. Restricted airflow could lead to poor operation and/or severe equipment damage.

Likewise, it is important to keep the outdoor coil clean. Dirt, leaves, or debris could also restrict the airflow. If cleaning of the outdoor coil becomes necessary, hire a qualified servicer. Inexperienced people could easily puncture the tubing in the coil. Even a small hole in the tubing could eventually cause a large loss of refrigerant. Loss of refrigerant can cause poor operation and/or severe equipment damage.

Do not use a condensing unit cover to "protect" the outdoor unit during the winter, unless you first discuss it with your dealer. Any cover used must include "breathable" fabric to avoid moisture buildup.

Before Calling Your Servicer

- Check the thermostat to confirm that it is properly set.
- Wait 15 minutes. Some devices in the outdoor unit or in programmable thermostats will prevent compressor operation for awhile, and then reset automatically. Also, some power companies will install devices which shut off air conditioners for several minutes on hot days. If you wait several minutes, the unit may begin operation on its own.

CAUTION

TO AVOID THE RISK OF EQUIPMENT DAMAGE OR FIRE, INSTALL THE SAME AMPERAGE BREAKER OR FUSE AS YOU ARE REPLACING. IF THE CIRCUIT BREAKER OR FUSE SHOULD OPEN AGAIN WITHIN THIRTY DAYS, CONTACT A QUALIFIED SERVICER TO CORRECT THE PROBLEM.
IF YOU REPEATEDLY RESET THE BREAKER OR REPLACE THE FUSE WITHOUT HAVING THE PROBLEM CORRECTED, YOU RUN THE RISK OF SEVERE EQUIPMENT DAMAGE.

- Check the electrical panel for tripped circuit breakers or failed fuses. Reset the circuit breakers or replace fuses as necessary.
- Check the disconnect switch near the indoor furnace or blower to confirm that it is closed.
- Check for obstructions on the outdoor unit . Confirm that it has not been covered on the sides or the top. Remove any obstruction that can be safely removed. If the unit is covered with dirt or debris, call a qualified servicer to clean it.
- Check for blockage of the indoor air inlets and outlets. Confirm that they are open and have not been blocked by objects (rugs, curtains or furniture).
- Check the filter. If it is dirty, clean or replace it.
- Listen for any unusual noise(s), other than normal operating noise, that might be coming from the outdoor unit. If you hear unusual noise(s) coming from the unit, call a qualified servicer.

CUSTOMER FEEDBACK

We are very interested in all product comments.
Please fill out the feedback form on one of the following links:
Goodman® Brand Products: (http://www.goodmanmfg.com/about/contact-us).
You can also scan the QR code on the right for the product brand you purchased to be directed to the feedback page.

GOODMAN® BRAND

PRODUCT REGISTRATION

Thank you for your recent purchase. Though not required to get the protection of the standard warranty, registering your product is a relatively short process, and entitles you to additional warranty protection, except that failure by California and Quebec residents to register their product does not diminish their warranty rights.

For Product Registration, please register as follows:
Goodman® Brand products: (https://www.goodmanmfg.com/product-registration).
You can also scan the QR code on the right for the product brand you purchased to be directed to the Product Registration page.

GOODMAN® BRAND