Packaged Heat Pump Units
A/GPHH3 13.4 SEER2 "H" SERIES With R-32
Installation Instructions

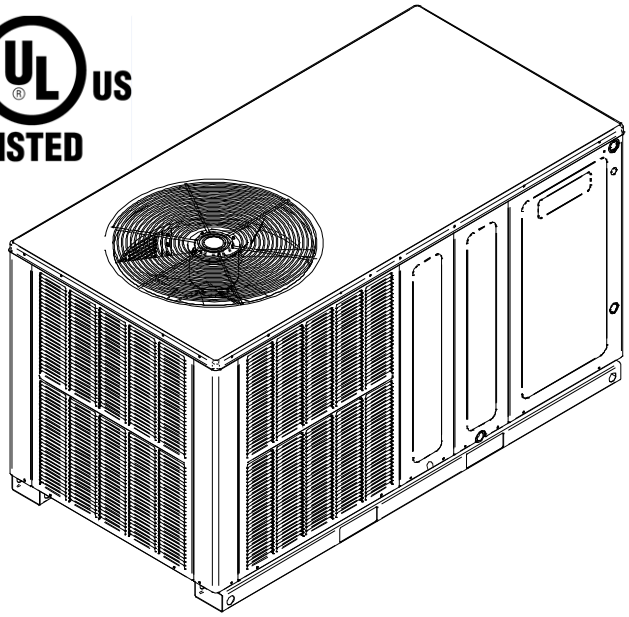

NOTE: This equipment is approved to use only with R-32 Refrigerant.

WARNING

Do not bypass safety devices.

NOTE: *PHH3 Models apply to both Amana® Brand and Goodman products only.

RECOGNIZE THIS SYMBOL AS A SAFETY PRECAUTION.

These installation instructions cover the outdoor installation of self contained package heating units. See the Specification Sheets applicable to your model for information regarding accessories.

***NOTE: Please contact your distributor or our website for the applicable specification sheets referred to in this manual.**

QUEBEC DISCLOSURE REGARDING AVAILABILITY OF REPLACEMENT PARTS, REPAIR SERVICES AND INFORMATION FOR MAINTENANCE AND REPAIR: Daikin Comfort Technologies Manufacturing, Inc. (Daikin) does not guarantee the availability of (1) replacement parts; (2) repair services; and (3) information necessary to maintain or repair products, within the meaning of section 39.1 of the Consumer Protection Act, CQLR, c P-40.1 and section 79.18 of the Regulation respecting the application of the Consumer Protection Act, CQLR, c P-40.1, r. 3.

AVIS POUR LE QUÉBEC CONCERNANT LA DISPONIBILITÉ DES PIÈCES DE RECHANGE, DES SERVICES DE RÉPARATION ET DES RENSEIGNEMENTS POUR L'ENTRETIEN ET LA RÉPARATION : Daikin Comfort Technologies Manufacturing, Inc. (Daikin) ne garantit pas la disponibilité (1) des pièces de rechange, (2) des services de réparation et (3) des renseignements pour l'entretien et la réparation, au sens de l'article 39.1 de la Loi sur la protection du consommateur, RLRQ c P-40.1 et de l'article 79.18 du Règlement d'application de la Loi sur la protection du consommateur, RLRQ c P-40.1, r 3.

WARNING

ONLY PERSONNEL THAT HAVE BEEN TRAINED TO INSTALL, ADJUST, SERVICE, MAINTENANCE OR REPAIR (HEREINAFTER, "SERVICE") THE EQUIPMENT SPECIFIED IN THIS MANUAL SHOULD SERVICE THE EQUIPMENT.

THIS EQUIPMENT IS NOT INTENDED FOR USE BY PERSONS (INCLUDING CHILDREN) WITH REDUCED PHYSICAL, SENSORY OR MENTAL CAPABILITIES, OR LACK OF EXPERIENCE AND KNOWLEDGE, UNLESS THEY HAVE BEEN GIVEN SUPERVISION OR INSTRUCTION CONCERNING USE OF THE APPLIANCE BY A PERSON RESPONSIBLE FOR THEIR SAFETY.

CHILDREN SHOULD BE SUPERVISED TO ENSURE THAT THEY DO NOT PLAY WITH THE EQUIPMENT.

THE MANUFACTURER WILL NOT BE RESPONSIBLE FOR ANY INJURY OR PROPERTY DAMAGE ARISING FROM IMPROPER SUPERVISION, SERVICE OR SERVICE PROCEDURES. IF YOU SERVICE THIS UNIT, YOU ASSUME RESPONSIBILITY FOR ANY INJURY OR PROPERTY DAMAGE WHICH MAY RESULT. IN ADDITION, IN JURISDICTIONS THAT REQUIRE ONE OR MORE LICENSES TO SERVICE THE EQUIPMENT SPECIFIED IN THIS MANUAL, ONLY LICENSED PERSONNEL SHOULD SERVICE THE EQUIPMENT. IMPROPER SUPERVISION, INSTALLATION, ADJUSTMENT, SERVICING, MAINTENANCE OR REPAIR OF THE EQUIPMENT SPECIFIED IN THIS MANUAL, OR ATTEMPTING TO INSTALL, ADJUST, SERVICE OR REPAIR THE EQUIPMENT SPECIFIED IN THIS MANUAL WITHOUT PROPER SUPERVISION OR TRAINING MAY RESULT IN PRODUCT DAMAGE, PROPERTY DAMAGE, PERSONAL INJURY OR DEATH.

All information contained herein is subject to change without notice.

19001 Kermier Rd. Waller, TX 77484
www.goodmanmfg.com • www.amana-hac.com

© 2025 Daikin Comfort Technologies Manufacturing, Inc.

Amana is a registered trademark of Maytag Corporation or its related companies and is used under license. All rights reserved.

IOG-3038C
12/2025

TABLE OF CONTENTS

To The Installer....2
Replacement Parts....2
Important Safety Instructions....2
General Information....6
Unit Location....7
Rigging....8
Ducting....9
Piping....10
Electrical Wiring....10
Start-up procedure and checklist....12
Components....13
Explanation And Guidance (Heat Pump)....13
Defrost Control....14
Suggested Field Testing/Troubleshooting....15
Air Flow Measurement And Adjustment....15
Adjusting Speed Tap For Indoor Blower Motor....16
Electric Heat Installation....18
Maintenance....18
Service....19
*PHH3[24-60]31 Blower Performance....22
Troubleshooting Chart....23
Unit Dimensions *PHH3....24
Wiring Diagram....25
Start-Up Checklist....27

TO THE INSTALLER

Carefully read all instructions for the installation prior to installing unit. Make sure each step or procedure is understood and any special considerations are taken into account before starting installation. Assemble all tools, hardware and supplies needed to complete the installation. Some items may need to be purchased locally. After deciding where to install unit, closely look the location over. Note any potential obstacles or problems that might be encountered as noted in this manual. Choose a more suitable location if necessary.

IMPORTANT NOTE: If a crankcase heater is used, the unit should be energized 24 hours prior to compressor start up to ensure crankcase heater has sufficiently warmed the compressor. Compressor damage may occur if this step is not followed.

Before using this manual, check the serial plate for proper model identification.

The installation and servicing of this equipment must be performed by qualified, experienced technicians only.

Transportation Damage

Upon receiving the unit, inspect it for damage from shipment. Claims for damage, either shipping or concealed, should be filed immediately with the shipping company. Check the unit model number, specifications, electrical characteristics and accessories to determine if they are correct. In the event an incorrect unit is shipped, it must be returned to the supplier and must NOT be installed. The manufacturer assumes no responsibility for installation of incorrectly shipped units.

Message to the Homeowner

These instructions are addressed primarily to the installer; however, useful maintenance information is included and should be kept, after installation, for future reference.

REPLACEMENT PARTS

Ordering Parts

When reporting shortages or damages, or ordering repair parts, give the complete unit model and serial numbers as stamped on the unit.'s nameplate. Replacement parts for this appliance are available through your contractor or local distributor. For the location of your nearest distributor, contact:

HOMEOWNER SUPPORT
DAIKIN COMFORT TECHNOLOGIES
MANUFACTURING, INC.
19001 KERMIER ROAD WALLER, TEXAS 77484
855-770-5678

IMPORTANT SAFETY INSTRUCTIONS

Recognize Safety Symbols, Words, and Labels

The following symbols and labels are used throughout this manual to indicate immediate or potential hazards. It is the owner's responsibility to read and comply with all safety information and instructions accompanying these symbols. Failure to heed safety information increases the risk of serious personal injury or death, property damage and/or product damage.

Cabling

Check that cabling will not be subject to wear, corrosion, excessive pressure, vibration, sharp edges or any other adverse environmental effects. The check shall also take into account the effects of aging or continual vibration from sources such as compressors or fans.

WARNING

Do not connect to or use any device that is not listed in the applicable product specifications as acceptable by the manufacturer for use with this unit. Serious property damage, personal injury, reduced unit performance and/or hazardous conditions may result from the use of such non-approved devices.

WARNING

HIGH VOLTAGE!
Disconnect all power before servicing or installing this unit. Multiple power sources may be present. Failure to do so may cause property damage, personal injury or death.

WARNING

Connecting unit duct work to unauthorized heat producing devices such as a fireplace insert, stove, etc. may result in property damage, fire, carbon monoxide poisoning, explosion, personal injury or death.

WARNING

To avoid property damage, personal injury or death, do not use this unit if any part has been under water. Immediately call a qualified service technician to inspect the furnace and to replace any part of the control system and any gas control having been under water.

WARNING

This unit must not be used as a "construction heater" during the finishing phases of construction on a new structure. This type of use may result in premature failure of the unit due to extremely low return air temperature and exposure to corrosive or very dirty atmospheres.

WARNING

To prevent the risk of property damage, personal injury, or death, do not store combustible materials or use gasoline or other flammable liquids or vapors in the vicinity of this appliance.

CAUTION

Auxiliary devices which may be a POTENTIAL IGNITION SOURCE shall not be installed in the duct work. Examples of such POTENTIAL IGNITION SOURCES are hot surfaces with a temperature exceeding 700 °C and electric switching devices.

WARNING

Do not use means to accelerate the defrosting process or to clean, other than those recommended by the manufacturer.

The appliance shall be stored in a room without continuously operating ignition sources (for example: open flames, an operating gas appliance or an operating electric heater).

Do not pierce or burn.

Be aware that refrigerants may not contain an odor.

WARNING

Only auxiliary devices approved by the appliance manufacturer or declared suitable with the refrigerant shall be installed in connecting ductwork.

WARNING

LEAK DETECTION SYSTEM installed. Unit must be powered except for service.

WARNING

This unit is equipped with electrically powered safety measures. To be effective, the unit must be electrically powered at all times after installation, other than when servicing.

THE FOLLOWING INSTRUCTIONS ARE MANDATORY FOR A2L SYSTEMS AND SUPERSEDE OTHER INSTRUCTIONS

WARNING
ONLY BRAZING TECHNIQUES AND APPROVED MECHANICAL JOINTS SHOULD BE USED TO CONNECT REFRIGERANT TUBING CONNECTIONS. NON-APPROVED MECHANICAL CONNECTORS AND OTHER METHODS ARE NOT PERMITTED IN THIS SYSTEM CONTAINING A2L REFRIGERANT. APPROVED MECHANICAL JOINTS WILL BE DETAILED IN THE PRODUCT'S SPECIFICATION SHEETS.

DEEP VACUUM METHOD

The Deep Vacuum Method requires a vacuum pump rated for 500 microns or less. This method effectively and efficiently ensures the system is free of non-condensable air and moisture. The Triple Evacuation Method is detailed in the Service Manual for this product model as an alternative.

1. Connect the vacuum pump, micron gauge, and vacuum-rated hoses to both service valves. Evacuation must use both service valves to eliminate system mechanical seals.
2. Evacuate the system to less than 500 microns.
3. Isolate the pump from the system and hold the vacuum for 10 minutes (minimum). Typically, pressure will rise slowly during this period. If the pressure rises to less than 1000 microns and remains steady, the system is considered leak-free; proceed to system charging and startup.
4. If pressure rises above 1000 microns but holds steady below 2000 microns, non-condensable air or moisture may remain, or a small leak may be present. Return to step 2: If the same result is achieved, check for leaks and repair. Repeat the evacuation procedure.
5. If pressure rises above 2000 microns, a leak is present. Check for leaks and repair any leaks. Then, repeat the evacuation procedure.

ACCESSORY INSTALLATION

WARNING
ALL ACCESSORIES THAT MAY BECOME A POTENTIAL IGNITION SOURCE IF INSTALLED, SUCH AS ELECTRONIC AIR CLEANERS, MUST ONLY BE POWERED THROUGH OUR ACCESSORY CONTROL BOARD KIT. IF AN ELECTRONIC AIR CLEANER IS ALREADY INSTALLED IN THE DUCT WORK AND NOT CONNECTED TO THE ACCESSORY CONTROL BOARD, IT WILL HAVE TO BE DISABLED OR REMOVED. ENSURE THAT ANY ADDITIONAL WIRING FROM THE INDOOR UNIT TO THE ACCESSORY CONTROL BOARD IS ROUTED AND PROTECTED FROM DAMAGE AND WEAR, AVOIDING THE FLUE PIPE AND ANY JOINTS THAT MAY NEED BRAZED OR DISCONNECTED FOR SERVICE. REFER TO THE PRODUCT SPECIFICATION SHEET FOR THE ACCESSORY CONTROL BOARD KIT PART NUMBER

ALTITUDE ADJUSTMENT FACTOR TO CALCULATE MINIMUM ROOM AREA

The Indoor equipment mitigation requirements are calculated at sea level. For higher altitudes adjust the minimum room area specified on or near the Serial Plate by the corresponding altitude adjustment factor shown below. This table is provided as a reference.

Adjusted room area ($A_{min\ adj}$) is the product of the minimum room area specified on the serial plate andthe adjustment factor AF, as shown in below formula

$A_{min\ adj} = A_{min}$ (serial plate) * AF

Height in meters	Height in feet	Altitude Adjustment Factor (AF)
At sea level	At sea level	1.00
1~200	1~660	1.02
200~400	660~1320	1.03
400~600	1320~1970	1.05
600~800	1970~2630	1.07
800~1000	2630~3290	1.09
1000~1200	3290~3940	1.11
1200~1400	3940~4600	1.13
1400~1600	4600~5250	1.15
1600~1800	5250~5910	1.17
1800~2000	5910~6570	1.19
2000~2200	6570~7220	1.21
2200~2400	7220~7880	1.24
2400~2600	7880~8540	1.26
2600~2800	8540~9190	1.29
2800~3000	9190~9850	1.31
3000~3200	9850~10500	1.34

GENERAL INFORMATION

The *PHH3 series heat pumps are designed for OUTDOOR USE ONLY. This series is available in cooling Capacities of 2, 2 ½, 3, 3 ½, 4 and 5 nominal tons of cooling. Optional field installed heat kits are available in 5,8,10,15 and 20 KW. The units can be easily installed in manufactured or modular homes with existing high-static duct work. The units can also be easily converted to accommodate a plenum for normal or low-static applications. The *PHH series are self contained packaged units so the only connections needed for installation are the supply and return ducts, the line and low voltage wiring and drain connection. Rated performance is achieved after 20 hours of operation. Rated performance is delivered at the specified airflow. See outdoor unit specification sheet for split system models or product specification sheet for packaged and light commercial models. Specification sheets can be found at www.goodmanmfg.com for Goodman® brand products or www.amana-hac.com for Amana® brand products. Within either website, please select the Products and Services menu and then select the submenu for the type of product to be installed, such as heat pumps, to access a list of product pages that each contain links to that model's specification sheet.

The information on the rating plate is in compliance with the FTC & DOE rating for single phase units. The three phase units in this series are not covered under the DOE certified program. The efficiency ratings of these units are a product of thermal efficiency determined under continuous operating conditions independent of any installed system.

EPA Regulations

Important: The United States Environmental Protection Agency (EPA) has issued various regulations regarding the introduction and disposal of refrigerants in this unit. Failure to follow these regulations may harm the environment and can lead to the imposition of substantial fines. Because regulations may vary due to passage of new laws, we suggest a certified technician perform any work done on this unit. Should you have any questions please contact the local office of the EPA.

National Codes

This product is designed and manufactured to permit installation in accordance with National Codes. It is the installer's responsibility to install the product in accordance with National Codes and/or prevailing local codes and regulations.

Qualification of Workers

Personnel must be certified to service, work, and/or repair units with FLAMMABLE REFRIGERANTS. A certificate should document the competence and qualification achieved through training that included the substance of the following:

- Information about the explosion potential of FLAMMABLE REFRIGERANTS to show that flammables may be dangerous when handled without care.
- Information about POTENTIAL IGNITION SOURCES, especially those that are not obvious, such as lighters, light switches, vacuum cleaners, electric heaters.
- Information about the different safety concepts, including ventilated and unventilated areas.
- Information about refrigerant detectors, including function, operation, and service measures.
- Information about the concept of sealed components and sealed enclosures according to IEC 60079-15:2010.
- Information about the correct working procedures, including commissioning, maintenance, repair, decommissioning, and disposal procedures.

Major Components

The unit includes a hermetically sealed refrigerating system (consisting of a compressor, condenser coil, evaporator coil with flowrator), an indoor blower, a condenser fan and all necessary internal electrical wiring. The heat pump also includes a reversing valve, solenoid, defrost thermostat and control and loss of charge protection. The system is factory-evacuated, charged and performance tested. Refrigerant amount and type are indicated on rating plate.

Pre-Installation Checkpoints

Carefully read all instructions for the installation prior to installing unit. Ensure each step or procedure is understood and any special considerations are taken into account before starting installation. Assemble all tools, hardware and supplies needed to complete the installation. Some items may need to be purchased locally.

Check that cabling /wiring will not be subject to wear, corrosion, excessive pressure, vibration, sharp edges or any other adverse environmental effects. The check shall also take into account the effects of aging or continual vibration from sources such as compressors or fans.

Under no circumstances shall potential sources of ignition be used in the searching for or detection of refrigerant leaks. A halide torch (or any other detector using a naked flame) shall not be used.

The following leak detection methods are deemed acceptable for all refrigerant systems.

Electronic leak detectors may be used to detect refrigerant leaks but, in the case of FLAMMABLE REFRIGERANTS, the sensitivity may not be adequate, or may need recalibration. (Detection equipment shall be calibrated in a refrigerant-free area.) Ensure that the detector is not a potential source of ignition and is suitable for the refrigerant used. Leak detection equipment shall be set at a percentage of the LFL of the refrigerant and shall be calibrated to the refrigerant employed, and the appropriate percentage of gas (25 % maximum) is confirmed.

Leak detection fluids are also suitable for use with most refrigerants but the use of detergents containing chlorine shall be avoided as the chlorine may react with the refrigerant and corrode the copper pipe-work.

If a leak is suspected, all naked flames shall be removed/ extinguished.

If a leakage of refrigerant is found which requires brazing, all of the refrigerant shall be recovered from the system.

Before attempting any installation, the following points should be considered:

- Structural strength of supporting members
- Clearances and provision for servicing
- Power supply and wiring
- Air duct connections
- Drain facilities and connections
- Location may be on any four sides of a home, manufactured or modular, to minimize noise

Consider the effect of outdoor fan noise on conditioned space and any adjacent occupied space. It is recommended that the unit be placed so that condenser air discharge does not blow toward windows less than 25 feet away.

The unit should be set on a solid, level foundation - preferably a concrete slab at least 4 inches thick. The slab should be above ground level and surrounded by a graveled area for good drainage. Any slab used as a unit's foundation should not adjoin the building as it is possible that sound and vibration may be transmitted to the structure. For rooftop installation, steel or treated wood beams should be used as unit support for load distribution.

Heat pumps require special location consideration in areas of heavy snow accumulation and/or areas with prolonged continuous subfreezing temperatures. Heat pump unit bases have holes under the outdoor coil to permit drainage of defrost water accumulation. The unit must be situated to permit free unobstructed drainage of the defrost water and ice. A minimum 2" clearance under the outdoor coil is required in the milder climates.

Heat Pump Elevation Chart	
Design Temperature	Suggested Minimum Elevation
+15° and above	2 - 1/2"
-5° to +14 °	8"
Below -5°	12"

UNIT LOCATION

NOTE: Units are designed for outdoor installation only at a max altitude of 8,000 feet above sea level.

WARNING

The appliance shall be installed, operated and stored in a room with a floor area not less than the minimum room area.

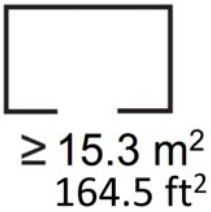

Minimum Room Area Figure

IMPORTANT NOTE: Refer to the altitude adjusted room area calculation referenced in this manual.

Clearance and accessibility

The unit is designed to be located outside the building with unobstructed condenser air inlet and discharge. Additionally, the unit must be situated to permit access for service and installation. Condenser air enters from three sides. Air discharges upward from the top of the unit. Refrigerant gauge connections are made on the right side of the unit as you face the compressor compartment. Electrical connections can be made either on the right or left sides of the unit. The best and most common application is for the unit to be located 10" from wall (4" minimum) with the connection side facing the wall. This "close to the wall" application minimizes exposed wiring.

Close to the wall application assures free, unobstructed air to the other two sides. In more confined application spaces, such as corners provide a minimum 12" clearance on all air inlet sides. Allow 36" minimum for service access to the compressor compartment and controls. The top of the unit should be completely unobstructed. If units are to be located under an overhang, there should be a minimum of 48" clearance and provisions made to deflect the warm discharge air out from the overhang.

Outside Slab Installation (Figure 1)

1. The unit must be mounted on a solid, level foundation.
2. Select a location that will minimize the length of the supply and return ducts.
3. Select a location where external water drainage cannot collect around the unit.
4. Consideration should also be given to shade, appearance and noise.

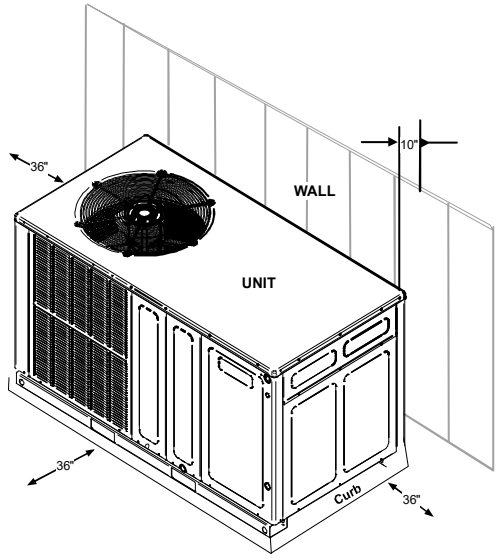

Figure 1

Rooftop Installation (Figure 2)

1. Before locating the unit on the roof, make sure that the strength of the roof and beams is adequate to support the weight involved. (See specification sheet for weight of units.) This is very important and the installer's responsibility.
2. Make proper consideration for the weather-tight integrity of the roof and proper drainage of condensate.
3. To ensure proper condensate drainage, unit must be installed in a level position.
4. Consideration should also be given to shade, appearance and noise.

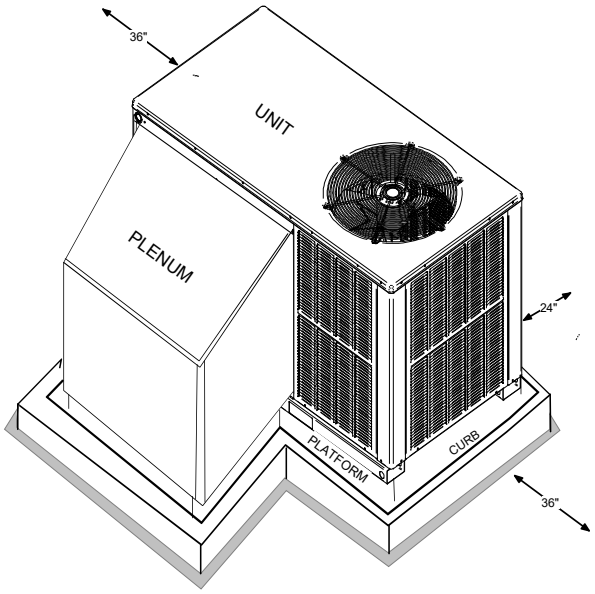

Figure 2

RIGGING

Rigging Details

WARNING

To prevent property damage, the unit should remain in an uprght position during all rigging and moving operations. To facilitate lifting and moving when a crane is used, place the unit in an adequate cable sling.

WARNING

To avoid possible property damage, personal injury or death, ensure the roof has sufficient structural strength to carry the weight of the unit(s), roof curb, snow loads, and water load as required by local codes. Consult a structural engineer to determine the weight capabilities of the roof.

CAUTION

If units are lifted two at a time, the fork holes on the condenser end of the unit must not be used. Minimum fork length is 42" to prevent damage to the unit; however, 48" is recommended.

NOTE: Provisions for forks have been included in the unit base frame. No other fork locations are approved.

CAUTION

To avoid possible personal injury, a safe, flat surface for service personnel should be provided.

WARNING

To prevent possible equipment damage, property damage, personal injury or death, the following bullet points must be observed when installing the unit.

Unit must be lifted by the four lifting holes located at the base frame corners.

- Lifting cables should be attached to the unit with shackles.
- The distance between the crane hook and the top of the unit must not be less than 60".
- Two spreader bars must span over the unit to prevent damage to the cabinet by the lift cables. Spreader bars must be of sufficient length so that cables do not come in contact with the unit during transport. Remove wood struts mounted beneath unit base frame before setting unit on roof curb. These struts are intended to protect unit base frame from fork lift damage. Removal is accomplished by extracting the sheet metal retainers and pulling the struts through the base of the unit. Refer to rigging label on the unit.

Refer to the Roof Curb Installation Instructions for proper curb installation. Curbing must be installed in compliance with the National Roofing Contractors Association Manual.

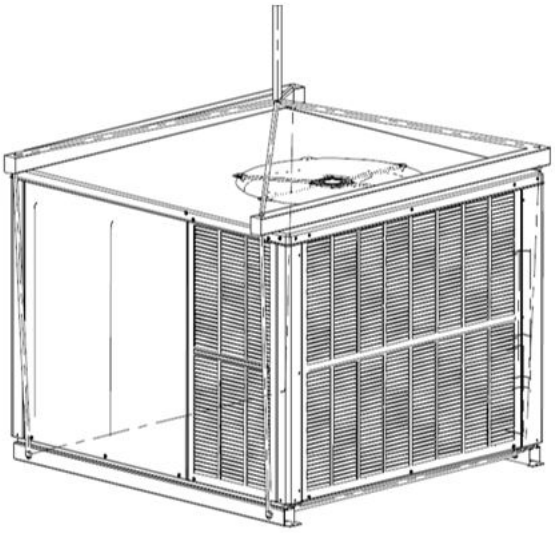

Figure 3

WARNING

Do not, under any circumstances, connect return ductwork to any other heat producing devices such as a fireplace insert, stove, etc. Unauthorized use of such devices may result in property damage, fire, carbon monoxide poisoning, explosion, personal injury or death.

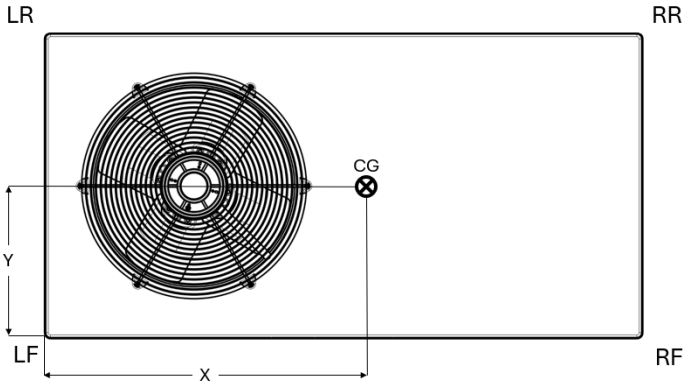

Corner and Center of Gravity Locations

NOTE: Units should be lifted at a point above center of gravity.

Model	Shipping Weight (lb)	Operating Weight (lb)	Corner Weights (lb)				X (in)	Y (in)
			LF	LR	RF	RR		
*PHH32431	323	313	106	53	66	103	33.92	16.11
*PHH33031	345	335	118	61	58	98	30.73	16.14
*PHH33631	403	393	128	76	82	107	31.74	15.83
*PHH34231	403	393	128	76	82	107	31.74	15.83
*PHH34831	429	419	145	84	74	116	29.93	16.23
*PHH36031	456	446	161	80	78	127	30.34	15.78

Corner Weights Table

DUCTING

Ducting work should be fabricated by the installing contractor in accordance with local codes. Industry manuals may be used as a guide when sizing and designing the duct system- such as NESCA (National Environmental Systems Contractors Association, 1501 Wilson Blvd., Arlington, Virginia 22209).

The unit should be placed as close as possible to the space to be air-conditioned allowing clearance dimensions as indicated. Ducts should run as directly as possible to supply and return outlets. Use of non-flammable weatherproof flexible connectors on both supply and return connections at the unit to reduce noise transmission is recommended.

It is preferable to install the unit on the roof of the structure if the registers or diffusers are located in the wall or ceiling. A slab installation is recommended when the registers are low on the wall or in the floor.

Connecting the Return and Supply Flexible Duct in Manufactured or Modular Housing Application

The return and supply fittings are to be attached at the unit to a suitable square to round duct converter. Your distributor has a factory designed square to round converter transition. The model #'s of these kits are as follows: Small Chassis 27.5" SQRPCH102, Large and Extra Large Chassis 32.5:" and 36" SQRPCH103 (See Specification Sheets for Dimension details). The SQRPCH101 has 14" duct collar on supply and 16" duct collar (equivalent diameter, opening is oval) on the return. The SQRPCH102 and SQRPCH103 have 14" duct collar on supply and 18" duct collar (equivalent diameter, opening is oval) on the return. The collars are to be slipped into the openings, and the flanges bent around the converter. The square to round converter is attached to the flanges of the square duct openings. The flexible duct is then clamped on to the collars. Once the duct is affixed to the unit, **seal the collars and flanges with a proper waterproof sealant** (See Figure 4).

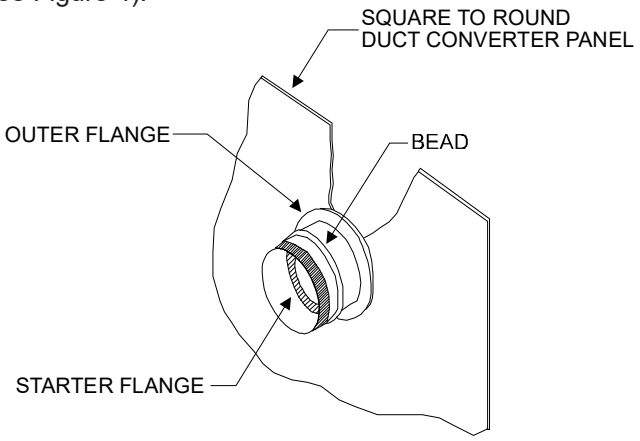

Figure 4

It is strongly encouraged to use appropriately sized ducts based upon the CFM for your application (unit's CFM). If duct sizing through industry manuals or air duct calculators require larger ducts than converter openings, run larger duct size up to unit converter openings and reduce with a reducer duct fitting or transition right at the unit.

Plenum Application

A suitable plenum or square duct must be constructed. The duct cross-sectional area should be determined by industry duct sizing manuals or air duct calculators.

On ductwork exposed to outside air conditions of temperature and humidity, use an insulation with a good K factor, and a vapor barrier. Industry practices should be followed. Balancing dampers are recommended for each branch duct in the supply system. Ductwork should be properly supported from the unit. False ceilings or drop ceilings may be used as a return air plenum.

NOTE: Adequate return grills have to be supplied for each room for proper return for that space.

NOTE: Proper sealing of all duct work and air handling compartments is extremely important to overall unit efficiency.

Filters

Filters are not provided with unit, and must be supplied and installed in the return duct system by the installer. A field installed filter grille is recommended for easy and convenient access to the filters for periodic inspection and cleaning. Filters must have adequate face area for the rated quantity of the unit. See table below for recommended filter size.

Unit	2 Ton	2 1/2 Ton	3 Ton	3 1/2 4 Ton	5 Ton
Min. Filter Size	(1)20 x 20 x 1	(1)20 x 25 x 1	(1)25 x 25 x 1	(2)20 x 20 x 1	2(20) x 25 x1

Recommended filter sizes
Table 1

PIPING

Condensate Drain

The condensate drain connection of the evaporator is a half coupling of ¾" N.P.T. A trap must be provided to have Proper condensate drainage.

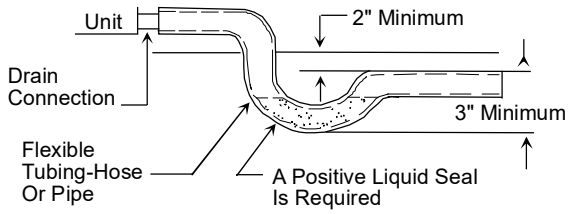

Figure 5

Install condensate drain trap as shown. Use ¾" drain connection size or larger. Do not operate without trap. Unit must be level or slightly inclined toward drain.

ELECTRICAL WIRING

WARNING

HIGH VOLTAGE!
Prior to servicing the unit or removing the compressor terminal plug or terminal cover, disconnect all electrical power from the unit. Multiple power sources may be present.

WARNING

Do not operate the compressor(s) without the terminal plug fully engaged or the terminal cover properly installed. Get away if unusual sounds are heard from within the compressor. Disconnect electrical power from the unit.

WARNING

A tripped circuit breaker or blown fuse may indicate that an electrical problem exists. Do not reset a circuit breaker or replace fuses without first performing thorough electrical troubleshooting and testing procedures.

WARNING

A Hermetic compressor electrical terminal venting can be dangerous. In certain circumstances, the terminal may be expelled, venting the refrigerant vapor and compressor oil contained within the compressor housing and system. Be alert for sounds of arcing (sizzling, sputtering, or popping) inside the compressor. Immediatly get away if you hear these sounds and disconnect electrical power from the unit.

Never operate the compressor without the terminal cover secured and properly in place or without the electrical plug fully seated and engaged to the terminal posts.

If a terminal is damaged, electrically overloaded, or short circuits to ground, there is a remote possibility that the terminal can be suddenly expelled from the terminal housing thereby venting the refrigerant and compressor oil mixture to atmosphere.

This discharge can be ignited from electrical arcing, or other open sources of ignition, and can cause potentially severe or fatal injury. This event is known as "Terminal Venting."

To reduce the possibility of external ignition, all open flames or other heat sources must be extinguished, and all electrical power must be turned off prior to opening the terminal cover or removing the electrical plug and servicing the system.

Proper sealed system evacuation is required during servicing to maintain adequate internal system cleanliness while eliminating contaminates.

Be alert for sounds of arcing (sizzling, sputtering, or popping) inside the compressor. IMMEDIATELY GET AWAY from the unit if you hear these sounds and disconnect electrical power.

NOTE: Never operate the compressor in a vacuum or in reverse operation.

CAUTION

To avoid property damage or personal injury due to fire, use only copper conductors.

All wiring should be made in accordance with the National Electrical Code. The local Power Company should be consulted to determine the availability of sufficient power to operate the unit. The voltage, frequency, and phase at the power supply should be checked to make sure it corresponds to the unit's RATED VOLTAGE REQUIREMENT.
Install a branch circuit fused disconnect near the unit, in accordance with the N.E.C. or local codes. Wire sizes and overcurrent protection should be determined from the unit nameplate ampacity and in accordance with Table 2 (page 7) or the N.E.C. Under no circumstances should wiring be sized smaller than is recommended by either of these two sources.

Fuses smaller than that recommended on the wiring diagrams could result in unnecessary fuse failure or service calls. The use of protective devices of larger size than indicated could result in extensive damage to the equipment. The manufacturer bears no responsibility for damage caused to equipment as result of the use of larger than is recommended size protective devices.

All units have undergone a run test prior to packaging for shipment. This equipment has been started at minimum rated voltage and checked for satisfactory operation. Do not attempt to operate this unit if the voltage is not within the minimum and maximum voltages shown on nameplate.

The units are designed for operation on 60 hertz current and at voltages as shown on the rating plate. All internal wiring in the unit is complete. It is necessary to bring in the power supply to the contactor as shown on the unit wiring diagram which is supplied with each unit. The low voltage wiring must be connected between the unit control panel and the room thermostat.

All exterior wiring must be within approved weatherproof conduit. The unit must be **permanently grounded** in accordance with local codes, or in absence of local codes, with N.E.C ANSI/ NFPA NO. 70-latest edition by using ground lug in the control box.

DO NOT EXCEED THE MAXIMUM OVERCURRENT DEVICE SIZE SHOWN ON UNIT DATA PLATE.

Fuses or HACR type circuit breakers may be used where codes permit.

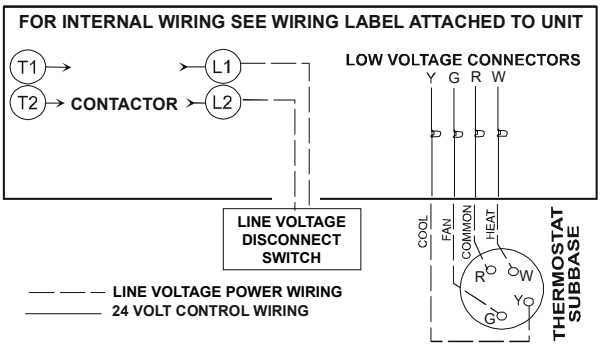

Figure 6

NOTE: Units are equipped with a single pole contactor. Caution must be exercised when servicing as only one phase of the power supply is broken with the contactor.

To wire the unit, make the following high and low voltage connections.

WARNING

HIGH VOLTAGE!
Disconnect all power before servicing or installing this unit. Multiple power sources may be present. Failure to do so may cause property damage, personal injury or death.

High Voltage Wiring: (See Figure 6)

Rated Voltage	Minimum Supply Voltage	Maximum Supply Voltage
208/240V	197	253

Unit Voltage

NOTE: The unit transformer is factory connected for 240V operation. If the unit is to operate on 208V, reconnect the transformer primary lead as shown on the unit wiring diagram.

Connect incoming power leads to terminals L1 & L2 on contactor in the electrical control section, using wire sizes specified in wiring table.

BRANCH CIRCUIT AMPACITY	15	20	25	30	35	40	45	50
SUPPLY WIRE LENGTH - FEET								
200	6	4	4	4	3	3	2	2
150	8	6	6	4	4	4	3	3
100	10	8	8	6	6	6	4	4
50	14	12	10	10	8	8	6	6

Table 2

Low Voltage Wiring:

a. Heat Pumps - Connect 24V wires from the thermostat to the corresponding wires in the control box using No. 18AWG as follows:

TERMINAL	THERMOSTAT
Red	R (24V)
Green	G (Fan)
Orange	O (Rev. Valve)
White	W1 (Heat, 2nd)*
Brown	W2 (Heat 3rd)*
Yellow	Y (Cool)
C (Blue)	C (Common)

*Optional field installed heat connections

Table 3

Internal Wiring:

A diagram detailing the internal wiring of this unit is located on the electrical box cover. If any of the original wire supplied with the appliance must be replaced, the wire gauge and insulation must be the same as the original wiring.

1. For branch circuit wiring (main power supply to unit disconnect), the minimum wire size for the length of the run can be determined from Table 2 using the circuit ampacity found on the unit rating plate. From the unit disconnect to unit, the smallest wire size allowable in Table 2 may be used for the ampacity, as the Disconnect must be in sight of the unit.
2. Wire size based on 60°C rated wire insulation and 30° C Ambient Temperature (86°F).
3. For more than 3 conductors in a raceway or cable, see the N.E.C. for derating the ampacity of each conductor.

START-UP PROCEDURE AND CHECKLIST

Begin with power turned off at all disconnects.

WARNING

HIGH VOLTAGE!
Disconnect all power before servicing or installing this unit. Multiple power sources may be present. Failure to do so may cause property damage, personal injury or death.

Heat Pump Start-Up Procedure

1. Check the cooling mode for the heat pump in the same manner as above. The reversing valve is energized when the thermostat is placed in the cooling position. A clicking sound should be noticeable from the reversing valve. By lowering the temperature setting to call for cooling, the contactor is energized. The compressor, blower and fan should then be running. After the cooling mode is checked out, turn the thermostat system switch to “OFF”.
2. Turn the thermostat system switch to “HEAT” and fan switch to “AUTO”.
3. Slowly raise the heating temperature setting. When the heating first stage makes contact, stop raising the temperature setting. The compressor, blower and fan should now be running with the reversing valve in the de-energized (heating) position. After giving the unit time to settle out, make sure the unit is supplying heated air.
4. If the outdoor ambient is above 80°F, the unit may trip on its high pressure cutout when in heating mode. The compressor should stop. The heating cycle must be thoroughly checked, so postpone the test to another day when conditions are more suitable but-DO NOT FAIL TO TEST.
5. If the outdoor ambient is low and the unit operates properly in the heating cycle, you may check the pressure cutout operation by blocking off the indoor return air until the unit trips. If unit operates properly in the heating cycle, raise the temperature setting until the heating second stage makes contact. Supplemental resistance heat, if installed should now come on. Make sure it operates properly.
   NOTE: 5-Ton 13.4 SEER2 models have two stages of compressor heat. During resistance heat test, increase temperature setting until third stage heat is energized.
   NOTE: If outdoor thermostats are installed the outdoor ambient must be below the set point of these thermostats for the heaters to operate. It may be necessary to jumper these thermostats to check heater operation if outdoor ambient is mild.
6. For thermostats with emergency heat switch. The emergency heat switch is located at the bottom of the thermostat. Move the switch to emergency heat. The heat pump will stop, the blower will continue to run, all heaters will come on and the thermostat emergency heat light will come on.
7. If checking the unit in the wintertime, when the outdoor coil is cold enough to actuate the defrost control, observe at least one defrost cycle to make sure the unit defrosts completely.

Final System Checks

Check to see if all supply and return air grilles are adjusted and the air distribution system is balanced for the best compromise between heating and cooling. Check for air leaks in the ductwork. See Sections on **Air Flow Measurement and Adjustment** and **Refrigerant Charge Check.** Make sure the unit is free of “rattles”, and the tubing in the unit is free from excessive vibration. Also make sure tubes or lines are not rubbing against each other or sheet metal surfaces or edges. If observed, correct the issue. Set the thermostat at the appropriate setting for cooling and heating or automatic changeover for normal use. Be sure the Owner is instructed on the unit operation, filter, servicing, correct thermostat operation, etc. The foregoing “Start-up Procedure and Check List” is recommended to serve as an indication that the unit will operate normally.

COMPONENTS

1. **Contactor** - This control is activated (closed) by the room thermostat for both heating and cooling. The contactor has a 24V coil and supplies power to the compressor and outdoor fan motor.
2. **Crankcase Heater** - This item is “ON” whenever power is supplied to the unit and the crankcase heater thermostat is closed. Crankcase heater thermostat closes at 67° and opens at 85°. It warms the compressor crankcase thereby preventing liquid migration and subsequent compressor damage. The insert type heater is self regulating. It is connected electrically to the contactor L1 and L2 terminals.
3. **Condenser Motor** - This item is activated by the contactor during heating and cooling, except during defrost and emergency heat operation.
4. **Compressor** - This item is activated by the contactor for heating and cooling, except during emergency heat. It is protected by an internal overload.
5. **Contactor Relay** - This control is activated by the thermostat (24V coil) and supplies power to the contactor.
6. **Defrost Control** - The Defrost control provides time/temperature initiation and termination of the defrost cycle. When a Defrost cycle is initiated, the defrost control shifts the reversing valve to “cooling” mode, stops the outdoor fan and brings on supplemental heat. Normally, a Defrost cycle will take only 2-3 minutes unless system is low on charge or outdoor conditions are severe (windy and cold). The defrost control also provides for a 3 minute off cycle compressor delay.
7. **Outdoor Thermostat** - These optional controls are used to prevent full electric heater operation at varying outdoor ambient (0°F to 45°F). They are normally open above their set points and closed below to permit staging of indoor supplement heater operation. If the outdoor ambient temperature is below 0°F (-18°C) with 50% or higher RH, an outdoor thermostat (OT) must be installed and set at (0°) on the dial. Failure to comply with this requirement may result in damage to the product which may not be covered by the manufacturer’s warranty.
8. **Reversing Valve Coil** - This coil is activated by the thermostat, in the cooling mode and during defrost. It positions the reversing valve pilot valve for cooling operation.
9. **Indoor Blower Motor** - Units with ECM Motors. The ECM model indoor blower motor is activated by the room thermostat by cooling/heating or fan ON position. The motor is energized by a 24 volt control signal (from thermostat Y, G or W) for ECM motors. ECM motors are constant torque motors with very low power consumption.

(See **Air Flow Measurement and Adjustment** for speed adjustment instructions).

10. **Blower Interlock Relay** - This relay is used to energize the blower during the electric heat operation. Some room thermostats do not energize the motor during electric heat. This relay insures blower operation when the room thermostat energizes heat. This relay has a 240 volt coil and an 8 amp contact relay. This relay is energized by the electric heat kit sequencer.

REFRIGERANT DETECTION SYSTEM (RDS)

RDS Function

The mitigation system is a stationary device that detects the presence of R-32 refrigerant above 25% LFL using refrigerant sensors and then initiates mitigation actions. The mitigation system’s primary function is to reduce the concentration of leaked R-32 refrigerant to prevent serious safety hazards. The mitigation actions are accomplished by halting HVAC operation and continuing indoor blower operation to provide airflow. Once refrigerant concentration reaches below a safe threshold, the unit will remain in mitigation mode for five minutes to evacuate any remaining R-32 refrigerant within the unit. Upon completion, the unit will resume its normal operation.

RDS Operation

The mitigation system is controlled by a refrigerant sensor(s), which is secured to a designated location(s) for active monitoring. If a leak is detected, HVAC operation is disabled and the indoor blower fan is activated, providing airflow at or above minimum required airflow to evacuate excess concentration. If a Zone Control system is installed in the ductwork attached to this system, the Zone controller must be powered through a Daikin Zoning/Accessory PCB to ensure that the Zoning Dampers open during mitigation mode to provide ventilation throughout all ducting. If the unit is installed with a communicating thermostat, the thermostat will display relevant alerts/information concerning mitigation mode. Once sensors read concentration levels below a safe threshold, a five-minute timer will initiate. Once the time is over, the unit will resume back to its normal operation. If the sensors detect another concentration excess, the unit will go back into mitigation mode and will repeat the same process.

EXPLANATION AND GUIDANCE (HEAT PUMP)

The heat pump is a relatively simple device. It operates exactly as a Summer Air Conditioner unit when it is on the cooling cycle. Therefore, all the charts and data for service that apply to summer air conditioning apply to the heat pump when it is on the cooling cycle, and most apply on the heating cycle except that “condenser” becomes “evaporator”, “evaporator” becomes “condenser”, “cooling” becomes “heating”.

When the heat pump is on the heating cycle, it is necessary to redirect the refrigerant flow through the refrigerant circuit external to the compressor. This is accomplished with a reversing valve. Thus, the hot discharge vapor from the compressor is directed to the indoor coil (evaporator on the cooling cycle) where the heat is removed, and the vapor condenses to liquid. It then goes through the expansion device to the outdoor coil (condenser on the cooling cycle) where the liquid is evaporated, and the vapor goes to the compressor.

When the solenoid valve coil is operated either from heating to cooling or vice versa, the piston in the reversing valve to the low pressure (high pressure) reverse positions in the reversing valve.

Figure 7 shows a schematic of a heat pump on the cooling cycle and the heating cycle. In addition to a reversing valve, a heat pump is equipped with an expansion device and check valve for the indoor coil, and similar equipment for the outdoor coil. It is also provided with a defrost control system.

The expansion devices are flowrator distributors and perform the same function on the heating cycle as on the cooling cycle. The flowrator distributors also act as check valves to allow for the reverse of refrigerant flow.

When the heat pump is on the heating cycle, the outdoor coil is functioning as an evaporator. The temperature of the refrigerant in the outdoor coil must be below the temperature of the outdoor air in order to extract heat from the air. Thus, the greater the difference in the outdoor temperature and the outdoor coil temperature, the greater the heating capacity of the heat pump. This phenomenon is a characteristic of a heat pump. It is a good practice to provide supplementary heat for all heat pump installations in areas where the temperature drops below 45°F. It is also a good practice to provide sufficient supplementary heat to handle the entire heating requirement should there be a component failure of the heat pump, such as a compressor, or refrigerant leak, etc.

Since the temperature of the liquid refrigerant in the outdoor coil on the heating cycle is generally below freezing point, frost forms on the surfaces of the outdoor coil under certain weather conditions of temperature and relative humidity. Therefore, it is necessary to reverse the flow of the refrigerant to provide hot gas in the outdoor coil to melt the frost accumulation. This is accomplished by reversing the heat pump to the cooling cycle. At the same time, the outdoor fan stops to hasten the temperature rise of the outdoor coil and lessen the time required for defrosting. The indoor blower continues to run and the supplementary heaters are energized.

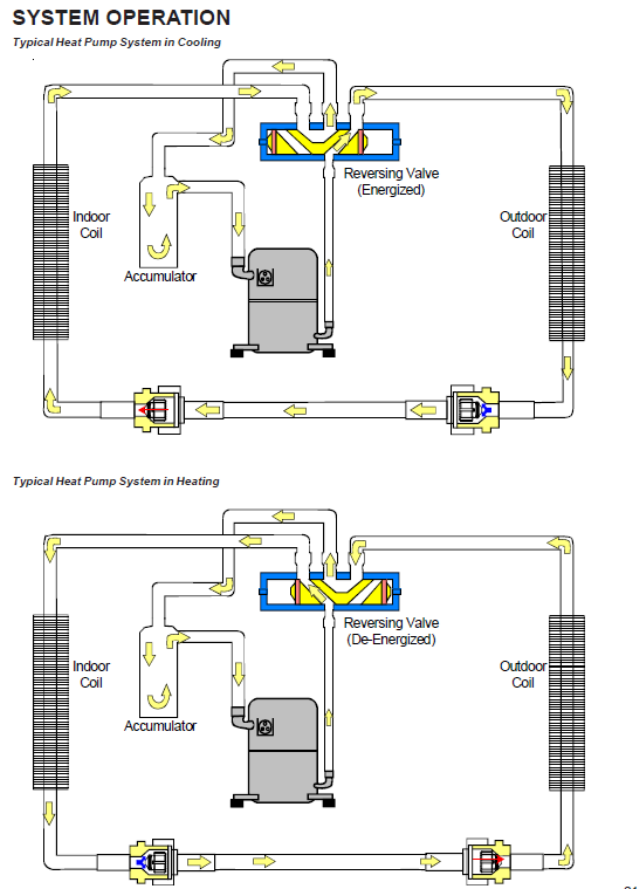

Heat Pump Refrigerant Circuit
Figure 7

DEFROST CONTROL

During operation the power to the circuit board is controlled by a temperature sensor, which is clamped to a feeder tube entering the outdoor coil. Defrost timing periods of 30, 60 and 90 minutes may be selected by setting the circuit board jumper to 30, 60 and 90 respectively. Accumulation of time for the timing period selected starts when the sensor closes (approximately 30 ± 5°F), and when the wall thermostat calls for heat. At the end of the timing period, the unit's defrost cycle will be initiated provided the sensor remains closed. When the sensor opens (approximately 60°F), the defrost cycle is terminated and the timing period is reset. If the defrost cycle is not terminated due to the sensor temperature, a twelve minute override interrupts the unit's defrost period.

SUGGESTED FIELD TESTING/ TROUBLESHOOTING

Testing Defrost Control

NOTE: PCBDM161 defrost controls have a three (3) minute compressor off cycle delay.

NOTE: The PCBDM161 defrost controls are shipped from the factory with the compressor delay option selected. This will de-energize the compressor contactor for 30 seconds on defrost initiation and defrost termination. If the jumper is set to Normal, the compressor will continue to run during defrost initiation and defrost termination. The control will also ignore the low-pressure switch connected to R-PS1 and PS2 for 5 minutes upon defrost initiation and 5 minutes after defrost termination.

To check the defrost control for proper sequencing, proceed as follows: With power ON; unit not running.

1. Jumper defrost thermostat by placing a jumper wire across the terminals “DFT” and “R”/” R-DFT” at defrost control board.
2. Remove jumper from timer pins and jump across test pins on defrost control board.
   NOTE: **Do not use screwdriver or field supplied jumper to test the control.**
3. Set thermostat to call for heating. System should go into defrost within 23 seconds.
4. Immediately remove jumper from test pins.
5. Using VOM (Volt Ohm Meter) check for voltage across terminals “C & O”. Meter should read 24 volts.
6. Using VOM check for voltage across fan terminals DF1 and DF2 on the board. Should read line voltage (208-230 VAC) indicating the relay is open in the defrost mode.
7. Using VOM check for voltage across “W”/”W2” & “C” terminals on the board. Should read 24 volts.
8. If not as above, replace control board.
9. Set thermostat to off position and disconnect power. Remove jumper from defrost thermostat and replace timer jumper to the desired defrost time.
   NOTE: Remove jumper across defrost thermostat before returning system to service.

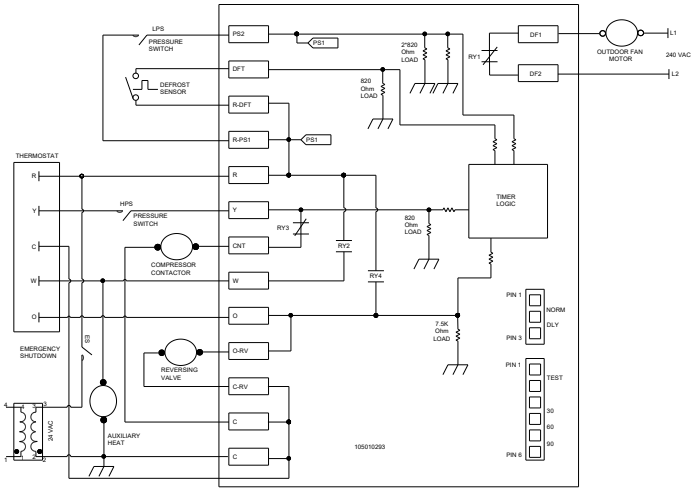

PCBDM133 Defrost Control
Figure 8

Testing Defrost Thermostat

1. Install a thermocouple type temperature test lead on the tube adjacent to the defrost control. Insulate the lead point of contact.
2. Check the temperature at which the control closes its contacts by lowering the temperature of the control. It should close at approximately 30°F.
3. Check the temperature at which the control opens its contacts by raising the temperature of the control. It should open at approximately 60°F.
4. If not as above, replace control.

AIR FLOW MEASUREMENT AND ADJUSTMENT

After reviewing section on DUCTING, proceed with airflow measurements and adjustments. Unit’s blower curves (in Specification Sheets) are based on external static pressure (ESP, in. of W.C.). The duct openings on the unit are considered internal static pressure, so as long as ESP is maintained, the unit will deliver the proper air up to the maximum static pressure listed for the CFM required by the application (i.e. home, building, etc.).

In general 400 CFM per ton of cooling capacity is a rule of thumb. Some applications depending on the sensible and latent capacity requirements may need only 350 CFM or up to 425 CFM per ton. Check condition space load requirements (from load calculations) and equipment expanded ratings data to match CFM and capacity.
After unit is set and ducted, verify ESP with a 1” inclined manometer with pitot tubes or a Magnahelic gauge and confirm CFM to blower curves in the specification sheets. All units have multiple speed blower motors. If factory selected speed is not utilized, the speed tap can be changed.

NOTE: never run CFM below 300 CFM per ton, evaporator freezing or poor unit performances is possible.

Total External Static Pressure

1. Using a digital manometer measure the static pressure of the return duct at the inlet of the unit (Negative Pressure).

2. Measure the static pressure of the supply duct (Positive Pressure).
3. Add the two readings together.
   EXAMPLE:
   Static reading from return duct = -.1”w.c.
   Static reading from supply duct = .3”w.c.
   Total external static pressure on this system = .4”w.c.

NOTE: Both readings may be taken simultaneously and read directly on the manometer if so desired.

4. Consult proper table for quantity of air.

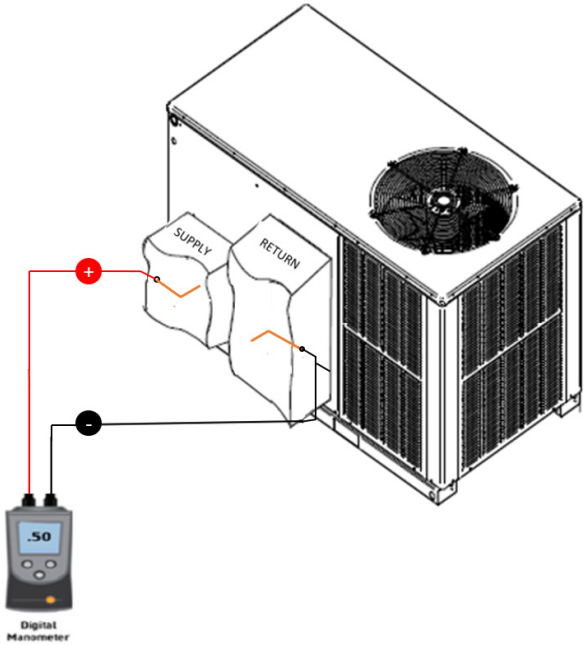

Total External Static
Figure 9

If the external static pressure exceeds the maximum allowable statics, check for closed dampers, dirty filter, undersized or poorly laid out ductwork.

ADJUSTING SPEED TAP FOR INDOOR BLOWER MOTOR

*PHH3[24-60]31 Models

NOTE: *PHH3[24-60]31 models are equipped with a multi-speed EEM motor.

EEM Motor

The blower motor speed for the EEM motor is controlled by three 24V low voltage leads: green, yellow, and white. The green lead sets the speed for fan-only mode. The yellow lead sets the speed for cooling and heat pump heating mode (if applicable).

EEM Motor Speed Adjustment

The white lead sets the speed for electric heat mode (emergency heat and second stage heat, if applicable). The leads are factory connected as follows: Green to T1,Yellow to T2, and White to T3. T1 is the low speed setting and is dedicated to fan-only mode. T2 is medium speed cooling and T3 is medium speed heating. T4 is high speed cooling and T5 is high speed heating. To adjust the blower speed, move the yellow and/or white wires to T4 and T5.

NOTE: If more than one lead is energized at the same time, the motor will use the higher speed setting.

NOTE: *P*H units are rated for a maximum E.S.P. of 0.8 except when using a 20kw electric heater. (The maximum static for 20 kW electric heat is 0.5 E.S.P.) When these units are installed in the 0.5 - 0.8 E.S.P. range, the white lead (electric heat) must be moved to T5 for proper operation of the electric heaters.

CFM Delivery and Adjustments

See the Blower Performance section.

Thermostat Wiring

Use thermostat wiring diagrams provided with the thermostat when making these connections.

TXV Superheat Adjustment

NOTE: Superheat adjustments should not be made until indoor ambient conditions have stabilized and correct air flow (CFM) has been verified. This could take up to 24 hours depending on indoor temperature and humidity. Before checking superheat run the unit in cooling for 15-20 minutes or until refrigerant pressues stabilizes.

NOTE: TXV Adjustments should not exceed one turn clockwise (CW) or counterclockwise (CCW) from the factory setting.

Unscrew the cover from the expansion valve, locate the adjustment screw, and turn in clockwise (in) to increase superheat or counterclockwise (out) to decrease superheat. It is recommended to make small adjustments at a time, 1/8 - 1/4 turn increments. Replace adjustment cap. Wait a minimum of 15 minutes between adjustments to allow time for the TXV and pressure to stabilize.

Refrigerant Charge Check

NOTE: For optimal performance, follow charging instructions below.

Units with TXV

Single Stage Cooling Application:

Refer to the Unit Subcooling and Superheat table.

Two Stage Cooling Application:
Run unit on Low Stage cooling and refer to Unit Subcooling and Superheat table.

1. Purge gauge lines. Connect service gauge manifold to access fittings. Run system at least 15 minutes to allow pressure to stabilize.
2. Temporarily install thermometer on liquid (small) line near liquid line access fitting with adequate contact and insulation for best possible reading.
3. Check subcooling and superheat. The appropriate range for each model is available in the Unit Subcooling and Superheat table.
   a. If subcooling and superheat are low, adjust TXV superheat, then check subcooling.
   NOTE: To adjust superheat, turn the valve stem clockwise to increase and counterclockwise to decrease. Refer to TXV Superheat Adjustment referenced in this manual.
   b. If subcooling is low and superheat is high, add charge to raise subcooling then check superheat.
   c. If subcooling and superheat are high, adjust TXV superheat, then check subcooling.
   d. If subcooling is high and superheat is low, adjust TXV superheat and remove charge to lower the subcooling.
   NOTE: Do NOT adjust the charge based on suction pressure unless there is a gross undercharge. If an undercharge is suspected, recover the charge, re-evacuate the system, and recharge per data plate. No adjustments should be made if suspecting a charge issue.
4. Disconnect manifold set, installation is complete.

Design Superheat & Subcool					
Model	Superheat ±2°F	Subcool ±1°F	Expansion Valve	Cooling Stage	Outdoor Ambient °F
* PHH32431	12.0	-	Piston	High	95
* PHH33031	7.0	-	Piston	High	95
* PHH33631	7.0	-	Piston	High	95
* PHH34231	7.0	-	Piston	High	95
* PHH34831	10.0	-	Piston	High	95
* PHH36031	8.0	-	Piston	High	95

Checking Subcooling

NOTE: Units with a TXV should be charged to Subcooling only.

SUBCOOLING FORMULA = SATURATED LIQUID LINE TEMPERATURE - LIQUID LINE TEMPERATURE

EXAMPLE:

a. Liquid Line Pressure = 417 PSI
b. Corresponding Temp. = 120°F
c. Thermometer on Liquid line = 109°F.

To obtain the amount of subcooling, subtract 109°F from 120°F. The difference is 11° subcooling. See the specification sheet or technical information manual for the design subcooling range for your unit.

Checking Superheat

Superheat can be determined as follows:

1. Read suction pressure. Determine Saturated Suction Temperature from tables or pressure gauge saturated temperature scale.
2. Read suction line temperature.
3. Use the following formula:

SUPERHEAT = SUCTION LINE TEMP - SAT. SUCTION TEMP.

Indoor Blower motor speed tap selection may need to be modified to accommodate normal continuous operation to prevent a nuisance trip. See following table.

*PHH3[24-60]31 Models (0 - 0.5 E.S.P.)					
Unit Model Number	Electric Heat KW				
	5	8	10	15	20
[*PHH]32431**	T3	T3	T3	NA	NA
[*PHH]33031**	T3	T3	T3	T5	NA
[*PHH]33631**	T3	T3	T3	T5	NA
[*PHH]34231**	T3	T3	T3	T5	T5
[*PHH]34831**	T3	T3	T3	T5	T3
[*PHH]36031**	T3	T3	T3	T5	T3

*PHH3[24-60]31 Models (0.5 -0.8 E.S.P.)					
Unit Model Number	Electric Heat KW				
	5	8	10	15	20
[*PHH]32431**	T5	T5	T5	T5	NA
[*PHH]33031**	T5	T5	T5	T5	NA
[*PHH]33631**	T5	T5	T5	T5	NA
[*PHH]34231**	T5	T5	T5	T5	NA
[*PHH]34831**	T5	T5	T5	T5	NA
[*PHH]36031**	T5	T5	T5	T5	NA

T1 - Fan Only, T2 - Normal Speed Cooling
T3 - Normal Speed Heating
T4 - High Speed Cooling, T5 - High Speed Cooling

.

ELECTRIC HEAT INSTALLATION

Heater Kit

NOTE: A separate power supply is required for the HKTP heater kits.

Refer to the Heat Kit Electrical Data (Blower Only, Heat Mode) specification table below for heater kit match up and heater kit electrical data information. See specific kit installation manual for installation instructions.

This series of electric cooling and heat pump package equipment is designed to accept a field installed electric heat kit. The unit is equipped to easily install the HKTP Series Electric Heat Kit. Full Installation Instructions are included in this kit. Please use this document for guidance in field equipping the package unit with electric heat. Choose the heat kit that fits the application for the specific installation. Permanently mark the unit's nameplate with the model being installed. High and low voltage connections are detailed in the heat kit instructions. Indoor Blower motor speed tap selection may need to be modified to accommodate normal continuous operation to prevent a nuisance trip. *See following table.*

MAINTENANCE

WARNING

HIGH VOLTAGE!
Disconnect all power before servicing or installing this unit. Multiple power sources may be present. Failure to do so may cause property damage, personal injury or death.

The Self Contained Package Heat Pump should operate for many years without excessive service calls if the unit is installed properly. However it is recommended that the homeowner inspect the unit before a seasonal start up. The coils should be free of debris so adequate airflow is achieved. The return and supply registers should be free of any obstructions. The filters should be cleaned or replaced. These few steps will help to keep the product up time to a maximum. The Troubleshooting Chart should help in identifying problems if the unit does not operate properly.

Recovery

When removing refrigerant from a system, either for servicing or decommissioning, it is recommended good practice that all refrigerants are removed safely.

When transferring refrigerant into cylinders, ensure that only appropriate refrigerant recovery cylinders are employed. Ensure that the correct number of cylinders for holding the total system charge is available. All cylinders to be used are designated for the recovered refrigerant and labelled for that refrigerant (i.e. special cylinders for the recovery of refrigerant). Cylinders shall be complete with pressure-relief valve and associated shut-off valves in good working order. Empty recovery cylinders are evacuated and, if possible, cooled before recovery occurs.

The recovery equipment shall be in good working order with a set of instructions concerning the equipment that is at hand and shall be suitable for the recovery of the flammable refrigerant. If in doubt, the manufacturer should be consulted. In addition, a set of calibrated weighing scales shall be available and in good working order. Hoses shall be complete with leak-free disconnect couplings and in good condition.

Part Number	Max E.S.P.		Circuit 1		Circuit 2		Output @ 240V	
	IN. W.C	*kPa*	*MCA*	*MOP*	*MCA*	*MOP*	*kW*	*BTU/hr*
HKTPD051	0.8	0.19	28.74	25	-	-	4.75	16200
HKTPD081	0.8	0.19	36.46	40	-	-	7.00	23800
HKTPD101	0.8	0.19	49.48	50	-	-	9.50	32400
HKTPD151	0.8	0.19	49.48	50	24.74	25	14.25	48600
HKTPD191	0.5	0.12	49.48	50	36.46	25	19.00	64800
HKTPD201	0.8	0.19	49.48	50	36.46	25	19.00	64800

The recovered refrigerant shall be processed according to local legislation in the correct recovery cylinder, and the relevant waste transfer note arranged. Do not mix refrigerants in recovery units and especially not in cylinders.

If compressors or compressor oils are to be removed, ensure that they have been evacuated to an acceptable level to make certain that flammable refrigerant does not remain within the lubricant. The compressor body shall not be heated by an open flame or other ignition sources to accelerate this process. When oil is drained from a system, it shall be carried out safely.

Charging Procedures

In addition to conventional charging procedures, the following requirements shall be followed.

- Ensure that contamination of different refrigerants does not occur when using charging equipment.
- Hoses or lines shall be as short as possible to minimize the amount of refrigerant contained in them.
- Cylinders shall be kept in an appropriate position according to the instructions.
- Ensure that the REFRIGERATING SYSTEM is grounded prior to charging the system with refrigerant.
- Extreme care shall be taken not to overfill the REFRIGERATING SYSTEM.

Prior to recharging the system, it shall be pressure-tested with the appropriate purging gas. The system shall be leak-tested on completion of charging but prior to commissioning. A follow up leak test shall be carried out prior to leaving the site.

NOTE: "Earthing" is defined as achieving an earth ground by connecting the equipment's supplied grounding lug to the earth. This should be verified by a certified technician.

SERVICE

NOTE: The following information is for use by qualified service agency only. Others should not attempt to service this equipment.

Common Causes of Unsatisfactory Operation of Heat Pump on the Heating Cycle.

Inadequate Air Volume Through Indoor Coil

When a heat pump is in the heating cycle, the indoor coil is functioning as a condenser. The return air filter must always be clean, and sufficient air volume must pass through the indoor coil to prevent excessive discharge pressure, and high pressure cut out.

Outside Air Into Return Duct

Do not introduce cold outside air into the return duct of a heat pump installation. Do not allow air entering the indoor coil to drop below 65°F. Air below this temperature will cause low discharge pressure, thus low suction pressure, and excessive defrost cycling resulting in low heating output. It may also cause false defrosting.

Undercharge

An undercharged heat pump on the heating cycle will cause low discharge pressure resulting in low suction pressure and frost accumulation on the outdoor coil.

Poor "Terminating" Sensor Contact

The unit's defrost terminating sensor must make good thermal contact with the outdoor coil tubing. Poor contact may not terminate the unit's defrost cycle quickly enough to prevent the unit from cutting out on high discharge pressure.

Malfunctioning Reversing Valve

This may be due to:

1. **Solenoid not energized** - In order to determine if the solenoid is energized, touch the nut that holds the solenoid cover in place with a screwdriver. If the nut magnetically holds the screwdriver, the solenoid is energized and the unit is in the cooling cycle.
2. **No voltage at unit's solenoid** - Check unit voltage. If no voltage, check wiring circuit.
3. **Valve will not shift:**
   a. **Undercharged** - check for leaks;
   b. **Valve Body Damaged** - Replace valve;
   c. **Unit Properly Charged** - If it is on the heating cycle, raise the discharge pressure by restricting airflow through the indoor coil. If the valve does not shift, tap it lightly on both ends with a screwdriver handle. Do Not Tap The Valve Body. If the unit is on the cooling cycle, raise the discharge pressure by restricting airflow through the outdoor coil. If the valve does not shift after the above attempts, cut the unit off and wait until the discharge and suction pressure equalize, and repeat above steps. If the valve does not shift, replace it.

Clean Outdoor Coil (Qualified Servicer Only)

The coil with the outside air flowing over it should be inspected annually and cleaned as frequently as necessary to keep the finned areas free of lint, hair and debris.

Clean Indoor Coil (Qualified Servicer Only)

Before cleaning the indoor coil, A2L sensor must be removed from the unit to avoid damage and contamination. Air filters should also be removed before performing maintenance. The coil with the filtered air flowing over it should be inspected and cleaned as frequently as necessary to keep the finned areas free of debris. Coil cleaning should be performed, utilizing an approved cleaning method and cleaning agent, from inside-out (opposite operating airflow direction) to prevent damage to the tube, fin coil, and any other components. Prior to resuming unit operation, ensure to reinstall the A2L sensor.

Servicing Measures for the Refrigerant Detection System

Before servicing, identify the mode of operation of the system by reading the LED flashing pattern on the PCB within the control box and matching the LED flashing pattern with mode of operation in the REFRIGERANT DETECTION SYSTEM TROUBLESHOOTING GUIDE on the wiring diagram which is attached on the back side of the control box panel (RDS PCB Fault Code table). After identifying the mode of operation, take recommended actions as specified in the Recommended Actions for PCB LED Flashing Codes table.

REFRIGERANT SENSORS for REFRIGERANT DETECTION SYSTEMS shall only be replaced with sensors specified by the manufacturer. If REFRIGERANT SENSOR requires replacement, please replace with Sensata R32 Sensor PN#RGD-00ML12 (Daikin PN#SER2A08012).

LED STATUS	
MODE	**LED FLASHING PATTERN**
NORMAL OPERATION	SLOW LED FLASHING PATTERN (2 SECONDS ON 2 SECONDS OFF)
R-32 LEAK ALARM	FAST LED FLASHING PATTERN
DELAY MODE	LED WILL BE ON CONTINUOUSLY
SYSTEM VERIFICATION MODE	FAST LED FLASHING PATTERN
CONTROL BOARD INTERNAL FAULT	LED WILL FLASH 2 TIMES AND THEN BE OFF FOR 5 SECONDS
R32 SENSOR COMMUNICATION FAULT	LED WILL FLASH 3 TIMES AND THEN BE OFF FOR 5 SECONDS
R32 SENSOR FAULT	LED WILL FLASH 4 TIMES AND THEN BE OFF FOR 5 SECONDS

RDS PCB Fault Code Table

TROUBLESHOOTING CODE

LED TROUBLESHOOT STATUS					
	MODE	DEFINITION	LED FLASHING PATTERN	RECOMMENDED ACTIONS	NOTES
1	Normal Operation	No faults to report.	Slow LED flashing pattern (2 seconds on and 2 seconds off)	No actions needed.	
2	R32 Leak Alarm	R32 leak is currently being detected.	Fast LED Flashing Pattern	A technician will need to find the refrigerant leak and address it. Unit shall be thawed before servicing.	In terms of the controls, no action is needed. The controls and sensor are working fine.
3	Delay Mode	After R32 leak or alarm has been cleared, the unit will remain in alarm mode for 5 minutes before returning to normal operation.	LED will be on continuously	No action needed - If the system was previously experiencing an actual R32 Leak, the refrigerant can no longer be detected by the sensor meaning it's either gone and the system won't work anymore or there was a false alarm. If the system was experiencing a Fault, the fault is gone and the system will return to normal operation in 5 min.	After any alarm or fault, it is required to remain in R32 mitigation mode for 5 minutes.
4	System Verification Mode	Manual test run by contractor to simulate R32 Leak Alarm (test will last for 5 minutes max).	Fast LED Flashing Pattern	No actions needed.	To enter system verification test mode, press the button on the control 2 times within 5 seconds. The control will enter a simulated R32 Leak Alarm state and remain in that mode for 5 minutes. After 5 minutes, the control will return to Normal Operation automatically. If the contractor wants to end the test early they need to press the button one time.
5	Control Board Internal Fault	Control board has detected an issue with the R32 detection system.	LED will flash 2 times and then be off for 5 seconds, before repeating pattern	1) Unplug and plug the R32 sensor back in. Cycle power to the system. 2) If the control is in "Normal Operation" or "Delay Mode", there is no more issue. If not, continue with diagnostics 3) Unplug R32 sensor and leave unplugged. Cycle power to the system 4) If the control still displays "Control Board Internal Fault" (2 flash pattern), replace the control. If the control now displays "R32 Sensor Communication Fault" (3 flash pattern), replace the sensor.	This error could indicate an on board relay failure or a short with the sensor communications. A sensor communication short could occur on the board itself or external to the board. These steps will determine if the error is on the board or external to the board.
6	R32 Sensor Communication Fault	Control board does not have communications with R32 sensor.	LED will flash 3 times and then be off for 5 seconds, before repeating pattern	1) Unplug and plug the R32 sensor back in. Cycle power to the system. 2) If control is in "Normal Operation" or "Delay Mode", there is no more issue. If not, continue with diagnostics. 3) If the control still displays "R32 Sensor Communication Fault" (3 flash pattern), replace both the sensor and the PCB.	If the control cannot talk to the sensor there could be a problem with the sensor, a problem with the sensor harness or a problem internal to the control. The field will not be able to measure anything to reliably fix this error assuming the connector is properly secured to the control. Replacing both is the only option.
7	R32 Sensor Fault	R32 Sensor has reported an internal issue.	LED will flash 4 times and then be off for 5 seconds, before repeating pattern	Replace R32 sensor.	Communications to the sensor are perfectly fine. The sensor itself is reporting an internal fault.

RECOMMENDED ACTIONS FOR PCB LED FLASHING CODES TABLE

	warning; flammable materials
	service indicator; read technical manual
	operator's manual; operating instructions
	warning; low burning velocity material
	UN GHS flame symbol

MARKING SYMBOL TABLE

*PHH3[24-60]31 BLOWER PERFORMANCE

Model	Speed	Volts		NEW E.S.P. (In. of H_2O)							
				0.1	0.2	0.3	0.4	0.5	0.6	0.7	0.8
*PHH32431**	T1	230	CFM	922	873	823	774	724	675	626	576
			Watts	74	85	96	107	118	129	140	151
	T2 / T3	230	CFM	1030	985	940	895	841	787	723	641
			Watts	104	115	124	134	144	155	164	169
	T4 / T5	230	CFM	1231	1179	1127	1074	1022	969	917	865
			Watts	168	180	193	205	2108	230	243	255
*PHH33031**	T1	230	CFM	864	808	757	695	636	567	494	437
			Watts	72	82	91	103	107	115	123	131
	T2 / T3	230	CFM	1324	1272	1216	1169	1117	1056	1002	945
			Watts	187	199	209	219	229	239	248	256
	T4 / T5	230	CFM	1404	1362	1321	1271	1238	1191	1150	1105
			Watts	235	246	257	272	284	289	300	309
*PHH33631**	T1	230	CFM	1161	1113	1076	1034	994	949	889	837
			Watts	139	150	163	172	184	194	207	218
	T2 / T3	230	CFM	1488	1418	1358	1328	1288	1248	1202	1153
			Watts	245	256	267	279	289	300	306	317
	T4 / T5	230	CFM	1542	1502	1462	1427	1392	1352	1316	1280
			Watts	291	301	314	327	339	349	359	371
*PHH34231**	T1	230	CFM	1271	1214	1167	1127	1095	1052	1013	971
			Watts	168	177	188	200	214	224	235	249
	T2 / T3	230	CFM	1492	1439	1390	1340	1303	1242	1193	1139
			Watts	255	265	275	285	296	304	315	324
	T4 / T5	230	CFM	1736	1679	1638	1598	1558	1520	1484	1441
			Watts	356	372	382	395	408	422	433	442
*PHH34831**	T1	230	CFM	1337	1297	1218	1155	1118	1088	1022	989
			Watts	179	190	203	210	225	243	249	268
	T2 / T3	230	CFM	1754	1705	1655	1612	1565	1523	1481	1435
			Watts	375	387	399	414	427	439	450	459
	T4 / T5	230	CFM	2002	1935	1885	1827	1767	1732	1669	1618
			Watts	498	521	516	534	551	567	571	574
*PHH36031**	T1	230	CFM	1418	1357	1315	1274	1239	1193	1148	1102
			Watts	212	219	227	236	243	252	266	275
	T2 / T3	230	CFM	1965	1907	1846	1790	1737	1681	1628	1577
			Watts	427	436	445	452	462	471	482	494
	T4 / T5	230	CFM	1933	1886	1838	1796	1759	1723	1693	1669
			Watts	491	499	506	519	527	534	539	550

NOTES:

1. Data shown is dry coil. Wet coil pressure drop is approx.
2. Data shown does not include filter pressure drop, approx. 0.08” H2O.
3. Reduce airflow by 2% for 208V operation.

TROUBLESHOOTING CHART

WARNING

HIGH VOLTAGE!
DISCONNECT ALL POWER BEFORE SERVICING OR INSTALLING THIS UNIT. MULTIPLE POWER SOURCES MAY BE PRESENT. FAILURE TO DO SO MAY CAUSE PROPERTY DAMAGE, PERSONAL INJURY OR DEATH.

SYMPTOM	POSSIBLE CAUSE	REMEDY
High head - low suction	a. Restriction in liquid line or flowrator	a. Remove or replace with proper size flowrator.
High head - high or normal suction	a. Dirty condenser coil b. Overcharged c. Condenser fan not running	a. Clean coil b. Correct System charge c. Repair or Replace
Low head - high suction	a. Incorrect flowrator b. Defective compressor valves c. Flowrator not seating properly	a. Replace with correct flowrator b. Replace compressor c. Check for debris under flowrator or deformed flowrator. Remove debris or replace flowrator.
Unit will not run	a. Power off or loose electrical connection b. Thermostat out of calibration set too high c. Defective contactor d. Blown fuses or tripped breaker e. Transformer defective f. High or low pressure control open (Optional) g. Compressor overload contacts open	a. Check for unit voltage at contactor in unit b. Reset c. Check for 24 volts at contactor coil replace if contacts are open d. Replace fuse or reset breaker Check wiring - replace transformer f. Reset high pressure control or check unit charge High pressure control opens at 610 psig Low pressure control opens at 22 psig g. Replace compressor NOTE: Wait at least 2 hours for overload to reset
Condenser fan runs, compressor doesn't	a. Loose connection b. Compressor stuck, grounded or open winding open internal overload c. Low voltage connection d. Capacitor weak, open, or shorted	a. Check for unit voltage at compressor check & tighten all connections b. Wait at least 2 hours for overload to reset If still open, replace the compressor. c. At compressor terminals, voltage must be within 10 % of nameplate volts when unit is operating d. Check capacitor. If defective, replace.
Low suction - cool compressor Iced evaporator coil	a. Low indoor airflow	a. Increase speed of blower or reduce restriction - replace air filters
Compressor short cycles	a. Defective overload protector b. Unit cycling on low pressure control c. High pressure switch cuts out	a. Replace - check for correct voltage b. Check refrigerant charge and / or airflow c. Check airflow (Indoor & outdoor)
Registers sweat	a. Low airflow	a. Increase speed of blower or reduce restriction replace air filters
High suction pressure	a. Excessive load b. Defective compressor c. Reversing valve not seating properly.	a. Recheck load calculation b. Replace c. Replace
Insufficient cooling	a. Improperly sized unit b. Improper airflow c. Incorrect refrigerant charge. d. Incorrect voltage	a. Recalculate load b. Check - should be approximately 400 CFM per ton c. Charge per procedure attached to unit service panel d. At compressor terminals, voltage must be within 10% of nameplate volts when unit is operating
Evaporator coil freezing or frosting	a. Low airflow b. Low refrigerant charge c. Operating unit in cooling mode below 65°F outdoor temperature	a. Check - should be approximately 400 CFM per ton, dirty air filters, all duct outlets open b. Properly charge unit c. Install or check low ambient control, should be open below 65°F outdoor temperature

UNIT DIMENSIONS *PHH3

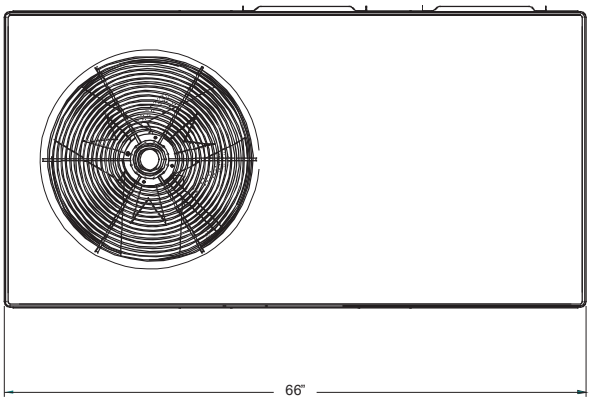

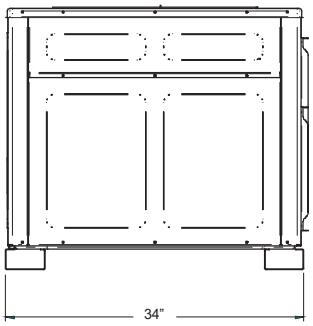

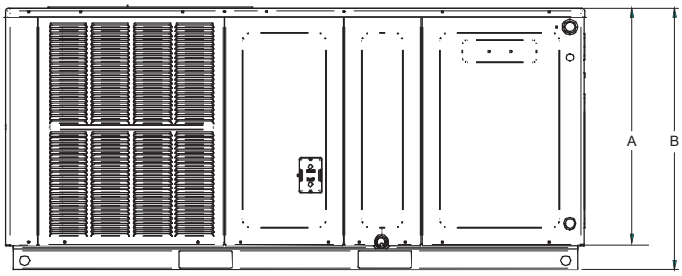

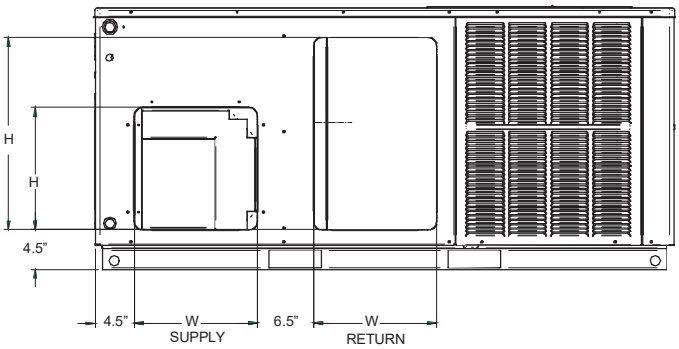

BACK VIEW
(DUCT OPENINGS)

Model	Unit Dimensions				Chassis Size
			Height		
	W	D	A	B	
*PHH32431**	66	34	27½	30	Small
*PHH33031**	66	34	27½	30	Small
PHH33631	66	34	32½	35	Medium
*PHH34231**	66	34	32½	35	Medium
*PHH34831**	66	34	32½	35	Medium
*PHH36031**	66	34	36	38½	Large

Model	Duct Openings			
	Supply		Return	
	W	H	W	H
*PHH32431**	14	14	14	22
*PHH33031**	14	14	14	22
*PHH33631**	14	14	14	24
*PHH34231**	14	14	14	24
*PHH34831**	14	14	14	24
*PHH36031**	14	14	14	24

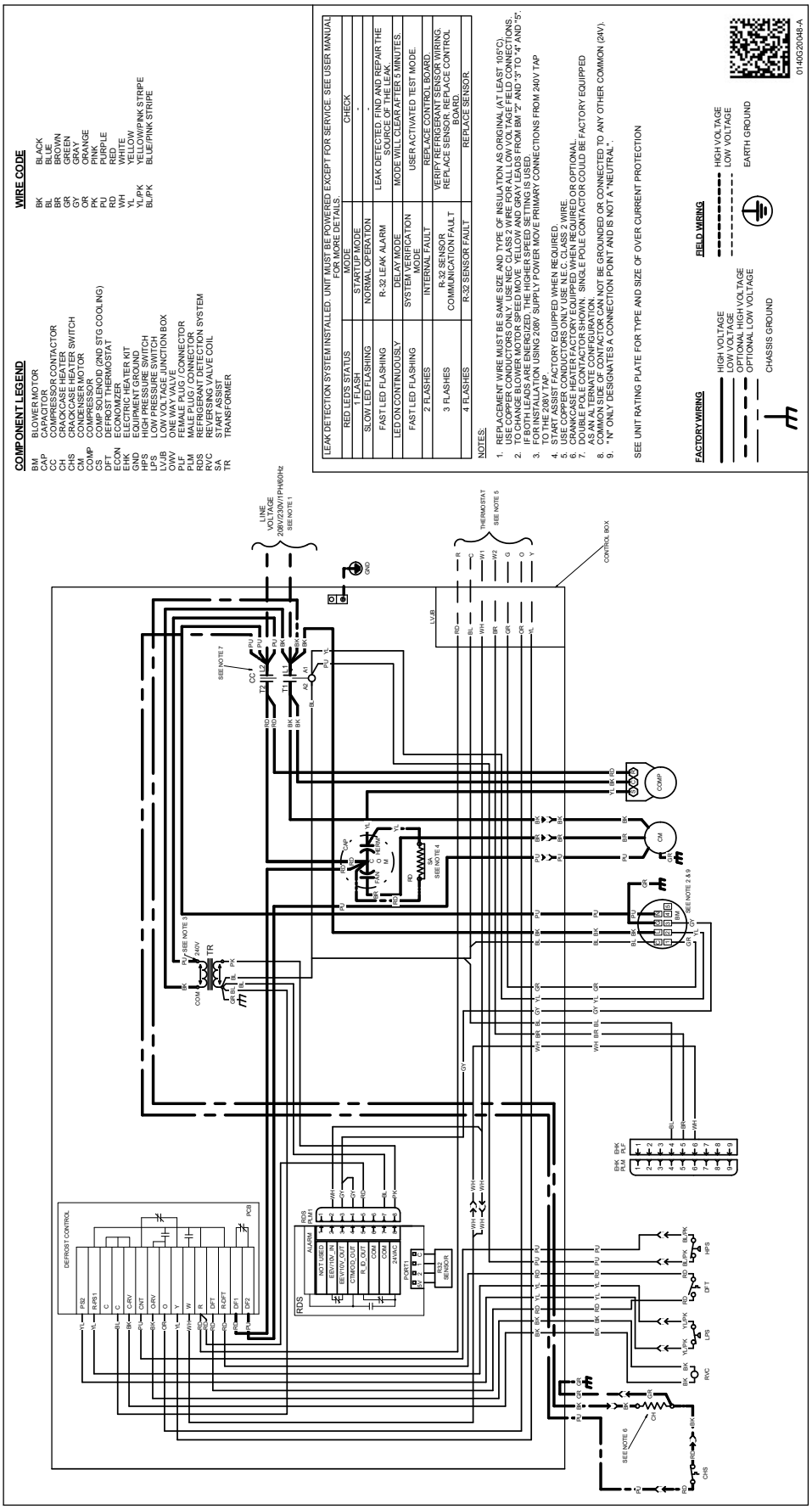
COMPONENT LEGEND
BM BLOWER MOTOR
CAP CAPACITOR
CC COMPRESSOR CONTACTOR
CH CRANKCASE HEATER
CHS CRANKCASE HEATER SWITCH
CM CONDENSER MOTOR
COMP COMPRESSOR
COS COMPRESSOR SOLENOID (2ND STG COOLING)
DFT DEFROST THERMOSTAT
ECON ECONOMIZER
EHK ELECTRIC HEATER KIT
GND GROUND TO BOARD
HPS HIGH PRESSURE SWITCH
LPS LOW PRESSURE SWITCH
LVJB LOW VOLTAGE JUNCTION BOX
OWV OVERHEAD VALVE
PLF FEMALE PLUG CONNECTOR
PLM MALE PLUG / CONNECTOR
RDS REFRIGERANT DETECTION SYSTEM
RVC REVERSING VALVE COIL
SAS START ASSIST BOARD
TR TRANSFORMER
WIRE CODE
BK BLACK
BL BLUE
BR BROWN
GR GREEN
GY GREY
OR ORANGE
PK PINK
PU PURPLE
RD RED
WH WHITE
YL YELLOW
YL/PK YELLOW/PINK STRIPE
BL/PK BLUE/PINK STRIPE
LEAK DETECTION SYSTEM INSTALLED. UNIT MUST BE POWERED EXCEPT FOR SERVICE. SEE USER MANUAL FOR MORE DETAILS
RED LED'S STATUS MODE CHECK
1 FLASH STARTUP MODE -
SLOW LED FLASHING NORMAL OPERATION -
FAST LED FLASHING R-32 LEAK ALARM LEAK DETECTED. FIND AND REPAIR THE SOURCE OF THE LEAK
LED ON CONTINUOUSLY DELAY MODE MODE WILL CLEAR AFTER 5 MINUTES.
FAST LED FLASHING SYSTEM VERIFICATION MODE USER ACTIVATED TEST MODE.
2 FLASHES INTERNAL FAULT REPLACE CONTROL BOARD.
3 FLASHES R-32 SENSOR COMMUNICATION FAULT VERIFY REFRIGERANT SENSOR WIRING. REPLACE SENSOR. REPLACE CONTROL BOARD.
4 FLASHES R-32 SENSOR FAULT REPLACE SENSOR.
NOTES:
1. REPLACEMENT WIRE MUST BE SAME SIZE AND TYPE OF INSULATION AS ORIGINAL (AT LEAST 105°C).
USE COPPER CONDUCTORS ONLY. USE NEC CLASS 2 WIRE FOR ALL LOW VOLTAGE FIELD CONNECTIONS.
2. TO CHANGE BLOWER MOTOR SPEED MOVE YELLOW AND GRAY LEADS FROM BM "2" AND "3" TO "4" AND "5".
3. IF EITHER LEAD IS USED, THE HIGH SPEED SETTING IS USED. REPLACE SEE NOTE 7.
4. FOR INSTALLATION USING 208V SUPPLY POWER MOVE PRIMARY CONNECTIONS FROM 240V TAP TO THE 208V TAP.
5. START ASSIST FACTORY EQUIPPED WHEN REQUIRED.
6. USE COPPER CONDUCTORS ONLY. USE NEC CLASS 2 WIRE.
7. CRANKCASE HEATER FACTORY EQUIPPED WHEN REQUIRED OR OPTIONAL.
8. DOUBLE POLE CONTACTOR SHOWN. SINGLE POLE CONTACTOR COULD BE FACTORY EQUIPPED AS AN ALTERNATE CONFIGURATION.
9. COMMON SIDE OF CONTACTOR CAN NOT BE GROUNDED OR CONNECTED TO ANY OTHER COMMON (24V).
10. "N" ONLY DESIGNATES A CONNECTION POINT AND IS NOT A "NEUTRAL".
SEE UNIT RATING PLATE FOR TYPE AND SIZE OF OVER CURRENT PROTECTION
FACTORY WIRING
HIGH VOLTAGE
LOW VOLTAGE
OPTIONAL HIGH VOLTAGE
OPTIONAL LOW VOLTAGE
CHASSIS GROUND
FIELD WIRING
HIGH VOLTAGE
LOW VOLTAGE
EARTH GROUND
LINE VOLTAGE 208V/230V/1PH/60Hz SEE NOTE 1
THERMOSTAT SEE NOTE 5
CONTROL BOX
DEFROST CONTROL
RDS
COMP
CM
CH
CHS
RVC
LPS
DFT
HPS
01400G20048-A

PACKAGE UNITS - HEAT PUMP AND AC UNITS

HOMEOWNER'S ROUTINE MAINTENANCE RECOMMENDATIONS

*We strongly recommend a bi-annual maintenance checkup be performed by a **qualified service agency** before the heating and cooling seasons begin.*

WARNING

HIGH VOLTAGE!
DISCONNECT ALL POWER BEFORE SERVICING OR INSTALLING THIS UNIT. MULTIPLE POWER SOURCES MAY BE PRESENT. FAILURE TO DO SO MAY CAUSE PROPERTY DAMAGE, PERSONAL INJURY OR DEATH.

REPLACE OR CLEAN FILTER

IMPORTANT NOTE: NEVER OPERATE UNIT WITHOUT A FILTER INSTALLED AS DUST AND LINT WILL BUILD UP ON INTERNAL PARTS RESULTING IN LOSS OF EFFICIENCY, EQUIPMENT DAMAGE AND POSSIBLE FIRE.
A RETURN AIR FILTER IS NOT SUPPLIED WITH THIS UNIT; HOWEVER, THERE MUST BE A MEANS OF FILTERING THE RETURN AIR. AN INDOOR AIR FILTER MUST BE USED WITH YOUR COMFORT SYSTEM. A PROPERLY MAINTAINED FILTER WILL KEEP THE INDOOR COIL OF YOUR COMFORT SYSTEM CLEAN. A DIRTY COIL COULD CAUSE POOR OPERATION AND/OR SEVERE EQUIPMENT DAMAGE.

The installer of your unit can tell you where your filter(s) are and how to clean or replace them.

Check your return filter(s) at least once every two months. When they are dirty, replace or clean as required. Disposable type filters should be replaced. Reusable type filters may be cleaned.

NOTE: REUSABLE TYPE FILTERS SHOULD BE WASHED WITH WARM WATER, DRIED COMPLETELY AND SPRAYED WITH AN ADHESIVE ACCORDING TO THE MANUFACTURERS RECOMMENDATIONS.

You may want to ask your dealer about high efficiency filters. High efficiency filters are available in both electronic and non-electronic types. These filters can do a better job of catching small airborne particles.

Improper filter maintenance is the most common cause of inadequate heating or cooling performance. Filters should be cleaned (permanent) or replaced (disposable) every two months or as required. When replacing a filter, it must be replaced with a filter of the same type and size and always make certain the air flow arrows on the filter point in the proper direction.

CONDENSER AND EVAPORATOR MOTORS

The bearings on the air circulating blower motor and condenser motor are permanently lubricated and require no further lubrication.

COMPRESSOR

The compressor motor is hermetically sealed and does not require additional oiling.

ALUMINUM INDOOR COIL CLEANING (QUALIFIED SERVICER ONLY)

This unit is equipped with an aluminum tube evaporator coil. The safest way to clean the evaporator coil is to simply flush the coil with water. This cleaning practice remains as the recommended cleaning method for both copper tube and aluminum tube residential cooling coils.

An alternate cleaning method is to use one of the products listed in the technical publication TP-109 (shipped in the literature bag with the unit) to clean the coils. The cleaners listed are the only agents deemed safe and approved for use to clean round tube aluminum coils. TP-109 is available on the web site in Partner Link > Service Toolkit.
NOTE: ENSURE COILS ARE RINSED WELL AFTER USE OF ANY CHEMICAL CLEANERS.

ANNUAL INSPECTION (QUALIFIED SERVICER ONLY)

Your package unit should be inspected by a qualified installer, or service agency at least twice every year. This check should be performed before the heating and cooling seasons begin. This will ensure that the system is performing properly and safely. Repair as necessary.

- Check physical support of the unit. Ensure it is sound without any sagging, cracks, or gaps, around the base.
- Check for obvious signs of deterioration of the unit.
- Check both condenser and evaporator coil to make sure each are clean.
- **Return Air Connection**. Check for physical soundness and ensure that the connection is firmly sealed to the package unit casing.
- **Wiring.** Check wires for damage. Check electrical connections for tightness and/or corrosion.
- **Filters.** Check that filters are clean and in the proper placement in the unit or duct system.
- **Louvers.** Inspect air inlet louvers inside the heat exchanger compartments. Ensure the area is clean and free of dirt and debris.

BEFORE CALLING YOUR SERVICER

- Check the thermostat to confirm that it is properly set.
- Check the disconnect switch near the unit to confirm that it is closed.
- Check the electrical panel for tripped circuit breakers or open fuses. Reset the circuit breakers or replace fuses as necessary.
- Check for blockage of the indoor air inlets and outlets. Confirm that they are open and have not been blocked by objects (rugs, curtains or furniture).
- Check for obstructions on the unit. Confirm that it has not been covered on the sides or the top. Remove any obstruction that can be safely removed. If the unit is covered with dirt or debris, call a qualified servicer to clean it.
- Check the filter. If it is dirty, clean or replace it.

START-UP CHECKLIST

Residential Package - (Indoor Section)					
		Model Number			
		Serial Number			
ELECTRICAL					
Line Voltage (Measure L1 and L2 Voltage)	L1 - L2				
Secondary Voltage (Measure Transformer Output Voltage)	R - C				
Blower Amps					
Heat Strip 1 - Amps					
Heat Strip 2 - Amps					
BLOWER EXTERNAL STATIC PRESSURE					
Return Air Static Pressure			IN. W.C.		
Supply Air Static Pressure			IN. W.C.		
Total External Static Pressure (Ignoring +/- from the reading above, add total here)			IN. W.C.		
TEMPERATURES					
Return Air Temperature (Dry bulb / Wet bulb)			DB °F		WB °F
Cooling Supply Air Temperature (Dry bulb / Wet bulb)			DB °F		WB °F
Heating Supply Air Temperature			DB °F		
Temperature Rise			DB °F		
Delta T (Difference between Supply and Return Temperatures)			DB °F		
GAS PRESSURES					
Gas Inlet Pressure			IN. W.C.		
Gas Manifold Pressure (Low Fire)			IN. W.C.		
Gas Manifold Pressure (High Fire)			IN. W.C.		
Gas Type (NG) = Natural Gas / (LP) = Liquid Propane					
Residential Package - (Outdoor Section)					
ELECTRICAL					
Supply Voltage (Measure L1 and L2 Voltage)	L1 - L2				
Compressor Amps					
Condenser Fan Amps					
PRESSURES / TEMPERATURES					
Suction Circuit (Pressure / Suction Line Temperature)	PSIG		TEMP		°F
Liquid Circuit (Pressure / Liquid Temperature)	PSIG		TEMP		°F
Outdoor Air Temperature (Dry bulb / Wet bulb)			DB °F		WB °F
SUPERHEAT / SUBCOOLING	SH		SC		
Additional Checks					
Check wire routings for any rubbing					
Check product for proper draining					
Check for kinked pressure switch tubing.					
Check flue elbow for alignment and clamp tightness.					
Check screw tightness on blower wheel.					
Check factory wiring and wire connections.					
Check screw tightness on Outdoor Motor and Blade					
Check product for proper clearances as noted by installation instructions					
°F to °C formula: (°F - 32) divided by 1.8 = °C	**°C to °F formula: (°C multiplied by 1.8) + 32 = °F**				

CUSTOMER FEEDBACK
We are very interested in all product comments.
Please fill out the feedback form on one of the following links:
Goodman® Brand Products: (http://www.goodmanmfg.com/about/contact-us).
Amana® Brand Products: (http://www.amana-hac.com/about-us/contact-us).
You can also scan the QR code on the right for the product brand you purchased to be directed to the feedback page.

GOODMAN® BRAND

AMANA® BRAND

19001 Kermier Rd. Waller, TX 77484
www.goodmanmfg.com • www.amana-hac.com
© 2025 Daikin Comfort Technologies Manufacturing, Inc.
Amana is a registered trademark of Maytag Corporation or its related companies and is used under license. All rights reserved.