GAS-ELECTRIC HEATING & COOLING PACKAGE UNIT
A/GPGM 13.4 SEER2 "M" SERIES WITH R-32
INSTALLATION INSTRUCTIONS

Affix this manual and Users Information Manual adjacent to the unit.

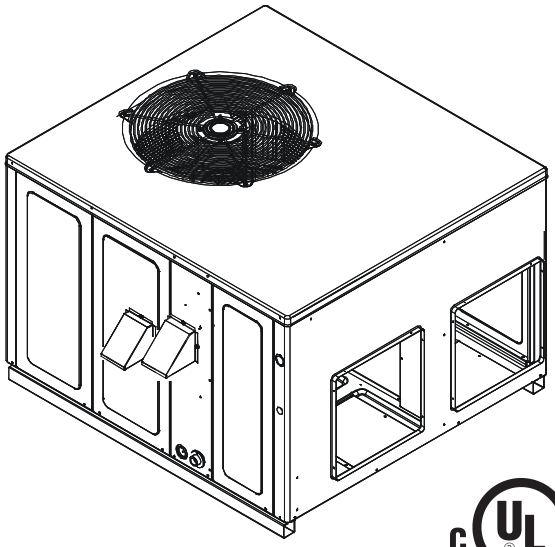

This Forced Air Central Unit Design Complies With Requirements Embodied In The American National Standard / National Standard of Canada Shown Below.
ANSI Z21.47•CSA-2.3 Central Furnaces.

WARNING

ONLY PERSONNEL THAT HAVE BEEN TRAINED TO INSTALL, ADJUST, SERVICE, MAINTENANCE OR REPAIR (HEREINAFTER, "SERVICE") THE EQUIPMENT SPECIFIED IN THIS MANUAL SHOULD SERVICE THE EQUIPMENT.

THIS EQUIPMENT IS NOT INTENDED FOR USE BY PERSONS (INCLUDING CHILDREN) WITH REDUCED PHYSICAL, SENSORY OR MENTAL CAPABILITIES, OR LACK OF EXPERIENCE AND KNOWLEDGE, UNLESS THEY HAVE BEEN GIVEN SUPERVISION OR INSTRUCTION CONCERNING USE OF THE APPLIANCE BY A PERSON RESPONSIBLE FOR THEIR SAFETY.

CHILDREN SHOULD BE SUPERVISED TO ENSURE THAT THEY DO NOT PLAY WITH THE EQUIPMENT.

THE MANUFACTURER WILL NOT BE RESPONSIBLE FOR ANY INJURY OR PROPERTY DAMAGE ARISING FROM IMPROPER SUPERVISION, SERVICE OR SERVICE PROCEDURES. IF YOU SERVICE THIS UNIT, YOU ASSUME RESPONSIBILITY FOR ANY INJURY OR PROPERTY DAMAGE WHICH MAY RESULT. IN ADDITION, IN JURISDICTIONS THAT REQUIRE ONE OR MORE LICENSES TO SERVICE THE EQUIPMENT SPECIFIED IN THIS MANUAL, ONLY LICENSED PERSONNEL SHOULD SERVICE THE EQUIPMENT. IMPROPER SUPERVISION, INSTALLATION, ADJUSTMENT, SERVICING, MAINTENANCE OR REPAIR OF THE EQUIPMENT SPECIFIED IN THIS MANUAL, OR ATTEMPTING TO INSTALL, ADJUST, SERVICE OR REPAIR THE EQUIPMENT SPECIFIED IN THIS MANUAL WITHOUT PROPER SUPERVISION OR TRAINING MAY RESULT IN PRODUCT DAMAGE, PROPERTY DAMAGE, PERSONAL INJURY OR DEATH.

c UL US LISTED

Content of Quebec Disclosure:
QUEBEC DISCLOSURE REGARDING AVAILABILITY OF REPLACEMENT PARTS, REPAIR SERVICES AND INFORMATION FOR MAINTENANCE AND REPAIR: Daikin Comfort Technologies Manufacturing, Inc. (Daikin) does not guarantee the availability of (1) replacement parts; (2) repair services; and (3) information necessary to maintain or repair products, within the meaning of section 39.1 of the Consumer Protection Act, CQLR, c P-40.1 and section 79.18 of the Regulation respecting the application of the Consumer Protection Act, CQLR, c P-40.1, r. 3.

AVIS POUR LE QUÉBEC CONCERNANT LA DISPONIBILITÉ DES PIÈCES DE RECHANGE, DES SERVICES DE RÉPARATION ET DES RENSEIGNEMENTS POUR L'ENTRETIEN ET LA RÉPARATION : Daikin Comfort Technologies Manufacturing, Inc. (Daikin) ne garantit pas la disponibilité (1) des pièces de rechange, (2) des services de réparation et (3) des renseignements pour l'entretien et la réparation, au sens de l'article 39.1 de la Loi sur la protection du consommateur, RLRQ c P-40.1 et de l'article 79.18 du Règlement d'application de la Loi sur la protection du consommateur, RLRQ c P-40.1, r 3.

WARNING

Do not bypass safety devices.

RECOGNIZE THIS SYMBOL AS A SAFETY PRECAUTION.

19001 Kermier Rd., Waller, TX 77484
www.goodmanmfg.com • www.amana-hac.com
© 2025 Daikin Comfort Technologies Manufacturing, Inc.

IOG-3033C
12/2025

Amana is a registered trademark of Maytag Corporation or its related companies and is used under license. All rights reserved.

These installation instructions cover the outdoor installation of self contained package air conditioners and heating units. See the Specification Sheets applicable to your model for information regarding accessories.

NOTE: This equipment is only approved for use with R-32 refrigerant.

***NOTE: Please contact your distributor or our website for the applicable Specification Sheets referred to in this manual.**

TABLE OF CONTENTS

REPLACEMENT PARTS 2
Ordering Parts 2
SAFETY INSTRUCTIONS 2
To the Installer 2
GENERAL INFORMATION 8
Qualification of workers 8
Transportation Damage 8
UNIT LOCATION 8
Cabling 8
Detection of flammable refrigerants 8
All Installations: 9
Ground Level Installations Only: 9
Rooftop Installations Only: 10
Roof Curb Installations Only: 10
RIGGING DETAILS 10
GAS PIPING 11
High Altitude Derate (U.S. Installations Only) .. 11
Piping 12
Gas Piping Checks 12
PROPANE GAS INSTALLATIONS 13
Tanks and Piping 13
ELECTRICAL WIRING 14
Thermostat Location 14
Single Stage Thermostat 14
Unit Voltage 15
CIRCULATING AIR AND FILTERS 15
Airflow Conversion 15
Down Discharge Applications 16
Ductwork 16
Filters 16
VENTING 16
Flue Hood Installation 16
CONDENSATE DRAIN 17
Condensate Drain Connection 17
NORMAL SEQUENCES OF OPERATION 17
Heating 17
Cooling 17
Fan Only 18
STARTUP, ADJUSTMENTS, AND CHECKS 18
Heating Startup 18
Gas Supply Pressure Measurement 19
Gas Manifold Pressure Measurement and Adjustment 20
Gas BTU Input Check 21
Temperature Rise Check 21
External Static Pressure Check 22
Cooling Startup 23
Checking Subcooling 24
Checking Superheat 24
Charging Procedures 25
Recovery 25
TROUBLESHOOTING 25
Ignition Control Error Codes 25
Abnormal Operation - Heating 26
Abnormal Operation - Cooling 27
MAINTENANCE 28
Filter Replacement or Cleaning 28
Cabinet Finish Maintenance 28
Clean Outside Coil (Qualified Servicer Only) ... 28
Condenser, Evaporator, and Induced Draft Motors 28
Flame Sensor (Qualified Servicer Only) 28
Flue Passages (Qualified Servicer Only) 28
Cleaning Flue Passages (Qualified Servicer Only) 28
Main Burner Flame (Qualified Servicer Only) 29
Cleaning Burners 29
ACCESSORIES AND FUNCTIONAL PARTS 29
Sheet Metal Accessories 29
Functional Parts 30
General Information 30
APPENDIX 37
UNIT DIMENSIONS 37
WIRING DIAGRAMS 38
HOMEOWNER'S ROUTINE MAINTENANCE RECOMMENDATIONS 41
START-UP CHECKLIST 43

REPLACEMENT PARTS

Ordering Parts

When reporting shortages or damages, or ordering repair parts, give the complete unit model and serial numbers as stamped on the unit's nameplate.

Replacement parts for this appliance are available through your contractor or local distributor. For the location of your nearest distributor contact:

HOMEOWNER SUPPORT
DAIKIN COMFORT TECHNOLOGIES
MANUFACTURING, INC.
19001 KERMIER ROAD
WALLER, TX 77484
(877) 254-4729

SAFETY INSTRUCTIONS

To The Installer

Before installing this unit, please read this manual to familiarize yourself on the specific items which must be adhered to, including maximum external static pressure to unit, air temperature rise, minimum or maximum CFM and motor speed connections.

Keep this literature in a safe place for future reference.

WARNING

Do not connect to or use any device that is not certified by the manufacturer for use with this unit. Serious property damage, personal injury, reduced unit performance and/or hazardous conditions may result from the use of such non-approved devices.

WARNING

Should overheating occur or the gas supply fail to shut off, turn off the manual gas shutoff valve external to the furnace before turning off the electrical supply.

WARNING

Heating unit should not be utilized without reasonable, routine, inspection, maintenance and supervision. If the building in which any such device is located will be vacant, care should be taken that such device is routinely inspected, maintained, and monitored. In the event that the building maybe exposed to freezing temperatures and will be vacant, all water-bearing pipes should be drained, the building should be properly winterized, and the water source closed. In the event that the building may be exposed to freezing temperatures and will be vacant, any hydronic coil units should be drained as well and, in such case, alternative heat sources should be utilized.

WARNING

To avoid property damage, personal injury or death, do not use this unit if any part has been under water. Immediately call a qualified service technician to inspect the furnace and to replace any part of the control system and any gas control having been under water.

WARNING

This unit must not be used as a "construction heater" during the finishing phases of construction on a new structure. This type of use may result in premature failure of the unit due to extremely low return air temperatures and exposure to corrosive or very dirty atmospheres.

WARNING

HIGH VOLTAGE

Disconnect all power before servicing or installing this unit. Multiple power sources may be present. Failure to do so may cause property damage, personal injury or death.

WARNING

If the information in these instructions is not followed exactly, a fire or explosions may result causing property damage, personal injury or loss of life.

-Do not store or use gasoline or other flammable vapors and liquids in the vicinity of this or any other appliance.

- WHAT TO DO IF YOU SMELL GAS:
  - Do not try to light any appliance.
  - Do not touch any electrical switch; do not use any phone in your building.
  - Immediately call your gas supplier from a neighbor's phone. Follow the gas supplier's instructions.
  - If you cannot reach your gas supplier, call the fire department.

Installation and service must be performed by a qualified installer service agency or the gas supplier.

WARNING

CARBON MONOXIDE POISONING HAZARD

Failure to follow the steps outlined below for each appliance connected to the venting system being placed into operation could result in carbon monoxide poisoning or death.

The following steps shall be followed with each appliance connected to the venting system placed in operation, while any other appliances connected to the venting system are not in operation:

1. Seal any unused openings in the venting system.
2. Inspect the venting system for proper size and horizontal pitch, as required by the National Fuel Gas Code, ANSI Z223.1 or the Natural Gas and Propane Installation Code, CSA B149.1-15 and these instructions. Determine that there is no blockage or restriction, leakage, corrosion and other deficiencies which could cause an unsafe condition.
3. As far as practical, close all building doors and windows and all doors between the space in which the appliance(s) connected to the venting system are located and other spaces of the building.
4. Close fireplace dampers.
5. Turn on clothes dryers and any appliance not connected to the venting system. Turn on any exhaust fans, such as range hoods and bathroom exhausts, so they shall operate at maximum speed.
   Do not operate a summer exhaust fan.
6. Follow the lighting instructions. Place the appliance being inspected in operation. Adjust thermostat so appliance shall operate continuously.
7. Test for spillage from draft hood appliances at the draft hood relief opening after 5 minutes of main burner operation. Use the flame of a match or candle.
8. If improper venting is observed during any of the above tests, the venting system must be corrected in accordance with the National Fuel Gas Code ANSI Z223.1/NFPA 54 and/or National Gas and Propane Installation Code CSA B149.1-15.
9. After it has been determined that each appliance connected to the venting system properly vents when tested as outlined above, return doors, windows, exhaust fans, fireplace dampers and any other gas burning appliance to their previous conditions of use.

WARNING

AUXILIARY DEVICES WHICH MAY BE A POTENTIAL IGNITION SOURCE SHALL NOT BE INSTALLED IN THE DUCT WORK. EXAMPLES OF SUCH POTENTIAL IGNITION SOURCES ARE HOT SURFACES WITH A TEMPERATURE EXCEEDING 700 °C AND ELECTRIC SWITCHING DEVICES.

WARNING

LEAK DETECTION SYSTEM INSTALLED. UNIT MUST BE POWERED EXCEPT FOR SERVICE.

WARNING

THIS UNIT IS EQUIPPED WITH ELECTRICALLY POWERED SAFETY MEASURES. TO BE EFFECTIVE, THE UNIT MUST BE ELECTRICALLY POWERED AT ALL TIMES AFTER INSTALLATION, OTHER THAN WHEN SERVICING.

WARNING

ONLY AUXILIARY DEVICES APPROVED BY THE APPLIANCE MANUFACTURER OR DECLARED SUITABLE WITH THE REFRIGERANT SHALL BE INSTALLED IN CONNECTING DUCTWORK.

WARNING

DO NOT OPERATE THE COMPRESSOR(S) WITHOUT THE TERMINAL PLUG FULLY ENGAGED OR THE TERMINAL COVER PROPERLY INSTALLED. GET AWAY IF UNUSUAL SOUNDS ARE HEARD FROM WITHIN THE COMPRESSOR. DISCONNECT ELECTRICAL POWER FROM THE UNIT.

WARNING

A TRIPPED CIRCUIT BREAKER OR BLOWN FUSE MAY INDICATE THAT AN ELECTRICAL PROBLEM EXISTS.
DO NOT RESET A CIRCUIT BREAKER OR REPLACE FUSES WITHOUT FIRST PERFORMING THOROUGH ELECTRICAL TROUBLESHOOTING AND TESTING PROCEDURES.

WARNING

HIGH VOLTAGE - PRIOR TO SERVICING THE UNIT OR REMOVING THE COMPRESSOR TERMINAL PLUG OR TERMINAL COVER, DISCONNECT ALL ELECTRICAL POWER FROM THE UNIT. MULTIPLE POWER SOURCES MAY BE PRESENT.

WARNING

DO NOT USE MEANS TO ACCELERATE THE DEFROSTING PROCESS OR TO CLEAN, OTHER THAN THOSE RECOMMENDED BY THE MANUFACTURER.

THE APPLIANCE SHALL BE STORED IN A ROOM WITHOUT CONTINUOUSLY OPERATING IGNITION SOURCES

(FOR EXAMPLE:OPEN FLAMES, AN OPERATING GAS APPLIANCE OR AN OPERATING ELECTRIC HEATER.)

DO NOT PIERCE OR BURN.

BE AWARE THAT REFRIGERANTS MAY NOT CONTAIN AN ODOR.

AVERTISSEMENT

RISQUE D'INTOXICATION AU MONOXYDE DE CARBONE

Si les étapes décrites ci-dessous ne sont pas suivies pour chacun des appareils raccordés au système de ventilation au moment de sa mise en marche, cela peut entraîner une intoxication au monoxyde de carbone ou la mort.

Les étapes suivantes doivent être suivies pour chacun des appareils raccordés au système de ventilation au moment de sa mise en marche, alors que tous les autres appareils raccordés au système de ventilation ne sont pas en marche :

1. Sceller toutes les ouvertures inutilisées du système de ventilation.
2. Inspecter le système de ventilation afin de vérifier si la taille et l'inclinaison par rapport à l'horizontale sont conformes aux exigences du National Fuel Gas Code, ANSI Z223.1/NFPA 54 ou du Code d'installation du gaz naturel et du propane, CSA B149.1 et à ces instructions. Vérifier qu'il n'y a pas d'obstruction ou de restriction, de fuite, de corrosion et d'autres problèmes qui pourraient entraîner une situation dangereuse.
3. Si possible, fermer toutes les portes et fenêtres du bâtiment ainsi que toutes les portes séparant l'endroit où se trouvent les appareils raccordés au système de ventilation et les autres zones du bâtiment.
4. Fermer le registre des foyers.
5. Mettre les sécheuses en marche ainsi que tous les autres appareils qui ne sont pas raccordés au système de ventilation. Mettre en marche tous les ventilateurs de tirage, comme celui des hottes de cuisine et des salles de bains, et les régler à la puissance maximale. Ne pas mettre en marche les ventilateurs d'été.
6. Suivre les instructions d'allumage. Mettre en marche l'appareil soumis à l'inspection. Régler le thermostat de manière à ce que l'appareil fonctionne en continu.
7. Vérifier la présence de fuite au niveau de l'ouverture du coupe-tirage des appareils qui en sont dotés après 5 minutes de fonctionnement du brûleur principal. Utiliser la flamme d'une allumette ou d'une bougie.
8. Si un problème de ventilation est observé pendant l'un des essais décrits ci-dessus, des correctifs doivent être apportés au système de ventilation conformément au National Fuel Gas Code, ANSI Z223.1/NFPA 54 et (ou) au Code d'installation du gaz naturel et du propane, CSA B149.1.
9. Une fois qu'il a été déterminé que chaque appareil raccordé au système de ventilation fonctionne correctement au moyen des essais décrits ci-dessus, les portes, les fenêtres, les ventilateurs, les registres de foyer et tous les autres appareils de combustion alimentés au gaz doivent être remis dans leur état initial.

WARNING

HERMETIC COMPRESSOR ELECTRICAL TERMINAL VENTING CAN BE DANGEROUS. IN CERTAIN CIRCUMSTANCES, THE TERMINAL MAY BE EXPELLED, VENTING THE REFRIGERANT VAPOR AND COMPRESSOR OIL CONTAINED WITHIN THE COMPRESSOR HOUSING AND SYSTEM. BE ALERT FOR SOUNDS OF ARCING (SIZZLING, SPUTTERING, OR POPPING) INSIDE THE COMPRESSOR. IMMEDIATELY GET AWAY IF YOU HEAR THESE SOUNDS AND DISCONNECT ELECTRICAL POWER FROM THE UNIT.

WARNING

FIRE OR EXPLOSION HAZARD

Failure to follow the safety warnings exactly could result in serious injury, death or property damage.

Never test for gas leaks with an open flame. Use a commercially available soap solution made specifically for the detection of leaks to check all connections. A fire or explosion may result causing property damage, personal injury or loss of life.

AVERTISSEMENT

RISQUE D'INCENDIE OU D'EXPLOSION

Si les consignes de sécurité ne sont pas suivies à la lettre, cela peut entraîner la mort, de graves blessures ou des dommages matériels.

Ne jamais vérifier la présence de fuites de gaz au moyen d'une flamme nue. Vérifier tous les raccords en utilisant une solution savonneuse commerciale conçue spécialement pour la détection de fuites. Un incendie ou une explosion risque de se produire, ce qui peut entraîner la mort, des blessures ou des dommages matériels.

WARNING

CARBON MONOXIDE POISONING HAZARD

Failure to follow instructions could result in severe personal injury or death due to carbon-monoxide poisoning, if combustion products infiltrate into the building. Check that all openings in the outside wall around the vent (and air intake) pipe(s) are sealed to prevent infiltrations of combustion products into the building. Check that furnace vent (and air intake) terminal(s) are not obstructed in any way during all seasons.

AVERTISSEMENT

RISQUE D'INTOXICATION AU MONOXYDE DE CARBONE

Si ces directives ne sont pas suivies, cela peut entraîner des blessures graves ou une intoxication au monoxyde de carbone pouvant causer la mort, si des produits de combustion s'infiltrent dans le bâtiment. Vérifier que toutes les ouvertures pratiquées dans le mur extérieur autour du ou des tuyaux d'évent (et de las prise d'air) sont scellées de manière à empêcher l'infiltration de produits de combustion dans le bâtiment. Veiller à ce que la ou les sorties de l'évent de l'appareil de chauffage (et la prise d'air) no soient, en aucune façon, obstruées, quelle que soit la saison.

DANGER

CARBON MONOXIDE POISONING HAZARD

Special Warning for Installation of Furnace or Air Handling Units in Enclosed Areas such as Garages, Utility Rooms or Parking Areas

Carbon monoxide producing devices (such as an automobile, space heater, gas water heater, etc.) should not be operated in enclosed areas such as unventilated garages, utility rooms or parking areas because of the danger of carbon monoxide (CO) poisoning resulting from the exhaust emissions. If a furnace or air handler is installed in an enclosed area such as a garage, utility room or parking area and a carbon monoxide producing device is operated therein, there must be adequate, direct outside ventilation.

This ventilation is necessary to avoid the danger of CO poisoning which can occur if a carbon monoxide producing device continues to operate in the enclosed area. Carbon monoxide emissions can be (re)circulated throughout the structure if the furnace or air handler is operating in any mode.

CO can cause serious illness including permanent brain damage or death.

B10259-216

DANGER
PELIGRO

RIESGO DE INTOXICACIÓN POR MONÓXIDO DE CARBONO

Advertencia especial para la instalación de calentadores ó manejadoras de aire en áreas cerradas como estacionamientos ó cuartos de servicio.

Los equipos ó aparatos que producen monóxido de carbono (tal como automóvil, calentador de gas, calentador de agua por medio de gas, etc) no deben ser operados en áreas cerradas debido al riesgo de envenenamiento por monóxido de carbono (CO) que resulta de las emisiones de gases de combustión. Si el equipo ó aparato se opera en dichas áreas, debe existir una adecuada ventilación directa al exterior.

Esta ventilación es necesaria para evitar el peligro de envenenamiento por CO, que puede ocurrir si un dispositivo que produce monóxido de carbono sigue operando en el lugar cerrado.

Las emisiones de monóxido de carbono pueden circular a través del aparato cuando se opera en cualquier modo.

El monóxido de carbono puede causar enfermedades severas como daño cerebral permanente ó muerte.

B10259-216

DANGER

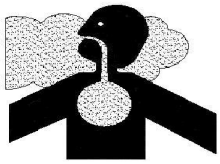

RISQUE D'EMPOISONNEMENT AU MONOXYDE DE CARBONE

Advertencia especial para la instalación de calentadores ó manejadoras de aire en áreas cerradas como estacionamientos ó cuartos de servicio.

Avertissement special au sujet de l'installation d'appareils de hauffage ou de traitement d'air dans des endroits clos, tets les garages, les locaux d'entretien et les stationnements. Evitez de mettre en marche les appareils produisant du monoxyde de carbone (tels que les automobile, les appareils de chauffage autonome,etc.) dans des endroits non ventilés tels que les d'empoisonnement au monoxyde de carbone. Si vous devez faire fonctionner ces appareils dans un endroit clos, assures-vous qu'il y ait une ventilation directe provenant de l'exterier.

Cette ventilation est nécessaire pour éviter le danger d'intoxication au CO pouvant survenir si un appareil produisant du monoxyde de carbone continue de fonctionner au sein de la zone confinée.

Les émissions de monoxyde de carbone peuvent etre recircules dans les endroits clos, si l'appareil de chauffage ou de traitement d'air sont en marche.

Le monoxyde de carbone peut causer des maladies graves telles que des dommages permanents au cerveau et meme la mort.

B10259-216

THE FOLLOWING INSTRUCTIONS ARE MANDATORY FOR A2L SYSTEMS AND SUPERSEDE OTHER INSTRUCTIONS

WARNING
ONLY BRAZING TECHNIQUES AND APPROVED MECHANICAL JOINTS SHOULD BE USED TO CONNECT REFRIGERANT TUBING CONNECTIONS. NON-APPROVED MECHANICAL CONNECTORS AND OTHER METHODS ARE NOT PERMITTED IN THIS SYSTEM CONTAINING A2L REFRIGERANT. APPROVED MECHANICAL JOINTS WILL BE DETAILED IN THE PRODUCT'S SPECIFICATION SHEETS.

DEEP VACUUM METHOD

The Deep Vacuum Method requires a vacuum pump rated for 500 microns or less. This method effectively and efficiently ensures the system is free of non-condensable air and moisture. The Triple Evacuation Method is detailed in the Service Manual for this product model as an alternative.

1. Connect the vacuum pump, micron gauge, and vacuum-rated hoses to both service valves. Evacuation must use both service valves to eliminate system mechanical seals.
2. Evacuate the system to less than 500 microns.
3. Isolate the pump from the system and hold the vacuum for 10 minutes (minimum). Typically, pressure will rise slowly during this period. If the pressure rises to less than 1000 microns and remains steady, the system is considered leak-free; proceed to system charging and startup.
4. If pressure rises above 1000 microns but holds steady below 2000 microns, non-condensable air or moisture may remain, or a small leak may be present. Return to step 2: If the same result is achieved, check for leaks and repair. Repeat the evacuation procedure.
5. If pressure rises above 2000 microns, a leak is present. Check for leaks and repair them. Then, repeat the evacuation procedure.

ACCESSORY INSTALLATION

WARNING
ALL ACCESSORIES THAT MAY BECOME A POTENTIAL IGNITION SOURCE IF INSTALLED, SUCH AS ELECTRONIC AIR CLEANERS, MUST ONLY BE POWERED THROUGH OUR ACCESSORY CONTROL BOARD KIT. IF AN ELECTRONIC AIR CLEANER IS ALREADY INSTALLED IN THE DUCT WORK AND NOT CONNECTED TO THE ACCESSORY CONTROL BOARD, IT WILL HAVE TO BE DISABLED OR REMOVED. ENSURE THAT ANY ADDITIONAL WIRING FROM THE INDOOR UNIT TO THE ACCESSORY CONTROL BOARD IS ROUTED AND PROTECTED FROM DAMAGE AND WEAR, AVOIDING THE FLUE PIPE AND ANY JOINTS THAT MAY NEED BRAZED OR DISCONNECTED FOR SERVICE. REFER TO THE PRODUCT SPECIFICATION SHEET FOR THE ACCESSORY CONTROL BOARD KIT PART NUMBER

ALTITUDE ADJUSTMENT FACTOR TO CALCULATE MINIMUM ROOM AREA

The Indoor equipment mitigation requirements are calculated at sea level. For higher altitudes adjust the minimum room area specified on or near the Serial Plate by the corresponding altitude adjustment factor shown below. This table is provided as a reference.

Adjusted room area ($A_{min\ adj}$) is the product of the minimum room area specified on the serial plate andthe adjustment factor AF, as shown in below formula

$A_{min\ adj}$ = A_{min} (serial plate) * AF

Height in meters	Height in feet	Altitude Adjustment Factor (AF)
At sea level	At sea level	1.00
1~200	1~660	1.02
200~400	660~1320	1.03
400~600	1320~1970	1.05
600~800	1970~2630	1.07
800~1000	2630~3290	1.09
1000~1200	3290~3940	1.11
1200~1400	3940~4600	1.13
1400~1600	4600~5250	1.15
1600~1800	5250~5910	1.17
1800~2000	5910~6570	1.19
2000~2200	6570~7220	1.21
2200~2400	7220~7880	1.24
2400~2600	7880~8540	1.26
2600~2800	8540~9190	1.29
2800~3000	9190~9850	1.31
3000~3200	9850~10500	1.34

GENERAL INFORMATION

WARNING

TO PREVENT PROPERTY DAMAGE, PERSONAL INJURY OR DEATH, DUE TO FIRE, EXPLOSIONS, SMOKE, SOOT, CONDENSATION, ELECTRICAL SHOCK, OR CARBON MONOXIDE, THIS UNIT MUST BE PROPERLY INSTALLED, REPAIRED, OPERATED, AND MAINTAINED.

This unit is approved for outdoor installation ONLY.
Rated performance is achieved after 20 hours of operation. Rated performance is delivered at the specified airflow. See outdoor unit specification sheet for split system models or product specification sheet for packaged and light commercial models. Specification sheets can be found at www.goodmanmfg.com for Goodman® brand products or www.amana-hac.com for Amana® brand products. Within either website, please select the Products and Services menu and then select the submenu for the type of product to be installed, such as air conditioners or heat pumps, to access a list of product pages that each contain links to that model's specification sheet.

To assure that your unit operates safely and efficiently, it must be installed, operated, and maintained in accordance with these installation and operating instructions, all local building codes and ordinances, or in their absence, with the latest edition of the National Fuel Gas Code NFPA54/ANSI Z223.1 and National Standard of Canada CAN/CSA B149 Installation Codes.

The heating and cooling capacities of the unit should be greater than or equal to the design heating and cooling loads of the area to be conditioned. The loads should be calculated by an approved method or in accordance with A.S.H.R.A.E. Guide or Manual J - Load Calculations published by the Air Conditioning Contractors of America.

QUALIFICATION OF WORKERS

Personnel must be certified to service, work, and/or repair units with FLAMMABLE REFRIGERANTS. A certificate should document the competence and qualification achieved through training that included the substance of the following:

- Information about the explosion potential of FLAMMABLE REFRIGERANTS to show that flammables may be dangerous when handled without care.
- Information about POTENTIAL IGNITION SOURCES, especially those that are not obvious, such as lighters, light switches, vacuum cleaners, electric heaters.
- Information about the different safety concepts, including ventilated and unventilated areas.
- Information about refrigerant detectors, including function, operation, and service measures.
- Information about the concept of sealed components and sealed enclosures according to IEC 60079-15:2010.
- Information about the correct working procedures, including commissioning, maintenance, repair, decommissioning, and disposal procedures.

Obtain from:
American National Standards Institute
25 West 43rd Street, 4th Floor
New York, NY 10036

TRANSPORTATION DAMAGE

Check the carton upon arrival for external damage. If damage is found, a request for inspection by the carrier agent should be made in writing immediately.

Carefully inspect the unit for damage including damage to the cabinetry. Any bolts or screws which may have loosened in transit must be re-tightened. In the event of damage, the receiver should:

1. Make notation on delivery receipt of any visible damage to shipment or container.
2. Notify the carrier promptly and request an inspection.
3. In case of concealed damage, the carrier should be notified as soon as possible-preferably within 5 days.
4. File the claim with the following supporting documents:
   a. Original Bill of Lading, certified copy, or indemnity bond.
   b. Original paid freight bill or indemnity in lieu thereof.
   c. Original invoice or certified copy thereof, showing trade and other discounts or reductions.
   d. Copy of the inspection report issued by the carrier representative at the time damage is reported to the carrier. The carrier is responsible for making prompt inspection of damage and for a thorough investigation of each claim. The distributor or manufacturer will not accept claims from dealers for transportation damage.

NOTE: WHEN INSPECTING THE UNIT FOR TRANSPORTATION DAMAGE, REMOVE ALL PACKAGING MATERIALS. RECYCLE OR DISPOSE OF THE PACKAGING MATERIAL ACCORDING TO LOCAL CODES.

UNIT LOCATION

WARNING

TO PREVENT POSSIBLE EQUIPMENT DAMAGE, PROPERTY DAMAGE, PERSONAL INJURY OR DEATH, THE FOLLOWING BULLETS POINTS MUST BE OBSERVED WHEN INSTALLING THE UNIT.

CABLING

Check that cabling will not be subject to wear, corrosion, excessive pressure, vibration, sharp edges or any other adverse environmental effects. The check shall also take into account the effects of aging or continual vibration from sources such as compressors or fans.

DETECTION OF FLAMMABLE REFRIGERANTS

Under no circumstances shall potential sources of ignition be used in the searching for or detection of refrigerant leaks. A halide torch (or any other detector using a naked flame) shall not be used.

The following leak detection methods are deemed acceptable for all refrigerant systems.

Electronic leak detectors may be used to detect refrigerant leaks but, in the case of FLAMMABLE REFRIGERANTS, the sensitivity may not be adequate, or may need re-calibration. (Detection equipment shall be calibrated in a refrigerant-free area.) Ensure that the detector is not a potential source of ignition and is suitable for the refrigerant used. Leak detection equipment shall be set at a percentage of the LFL of the refrigerant and shall be calibrated to the refrigerant employed, and the appropriate percentage of gas (25 % maximum) is confirmed.

Leak detection fluids are also suitable for use with most refrigerants but the use of detergents containing chlorine shall be avoided as the chlorine may react with the refrigerant and corrode the copper pipework.

If a leak is suspected, all naked flames shall be removed/ extinguished.

If a leakage of refrigerant is found which requires brazing, all of the refrigerant shall be recovered from the system, or isolated (by means of shut off valves) in a part of the system remote from the leak.

NOTE: Units are designed for outdoor installation only at a max altitude of 8,000 feet above sea level.

WARNING

The appliance shall be installed, operated and stored in room with a floor area not less than the minimum room area.

$\geq 15.3\ m^2$
$164.7\ ft^2$

IMPORTANT NOTE: Refer to the altitude adjusted room area calculation referenced in this manual.

All Installations:

- For proper flame pattern within the heat exchanger and proper condensate drainage, the unit must be mounted level.
- The flue outlet hood must be at least 12 inches from any opening through which flue gases could enter a building, and at least three feet above any forced air inlet located within ten feet. The economizer/ manual fresh air intake/motorized fresh air intake and combustion air inlet mounted on the unit are not affected by this restriction.
- To avoid possible corrosion of the heat exchanger, do not locate the unit in an area where the outdoor air (i.e. combustion air for the unit) will be frequently contaminated by compounds containing chlorine or fluorine. Common sources of such compounds include swimming pool chemicals and chlorine bleaches, paint stripper, adhesives, paints, varnishes, sealers, waxes (which are not yet dried) and solvents used during construction and remodeling. Various commercial and industrial processes may also be sources of chlorine/ fluorine compounds.
- To avoid possible illness or death of the building occupants, do NOT locate outside air intake device (economizer, manual fresh air intake, motorized fresh air intake) too close to an exhaust outlet, gas vent termination, or plumbing vent outlet. For specific distances required, consult local codes.
- Allow minimum clearances from the enclosure for fire protection, proper operation, and service access. These clearances must be permanently maintained.
- The combustion air inlet and flue outlet hoods on the unit must never be obstructed. If used, do not allow the economizer/manual fresh air damper/ motorized fresh air damper to become blocked by snow or debris. In some climates or locations, it may be necessary to elevate the unit to avoid these problems.
- Damper must be in the open position when appliance main burner(s) is operating.
- When the unit is heating, the temperature of the return air entering the unit must be between 50°F and 100°F.
- Units manufactured on or after May 1, 2017 are not permitted to be used in Canada for heating of buildings or structures under construction.

Ground Level Installations Only:

- When the unit is installed on the ground adjacent to the building, a level concrete (or equal) base is recommended. Prepare a base that is 3” larger than the package unit footprint and a minimum of 3” thick.
- The base should also be located where no runoff of water from higher ground can collect in the unit.
- The top of the unit should be completely unobstructed. If units are to be located under an overhang, there should be a minimum of 48” clearance and provisions made to deflect the warm discharge air out from the overhang.
- Close to the wall application assures free, unobstructed air to the other two sides. In more confined application spaces, such as corners provide a minimum 12” clearance on all air inlet sides. Allow 36” minimum for service access to the compressor compartment and controls.
- Unit should be located a minimum of **3”** away from the wall with the connections facing the wall.

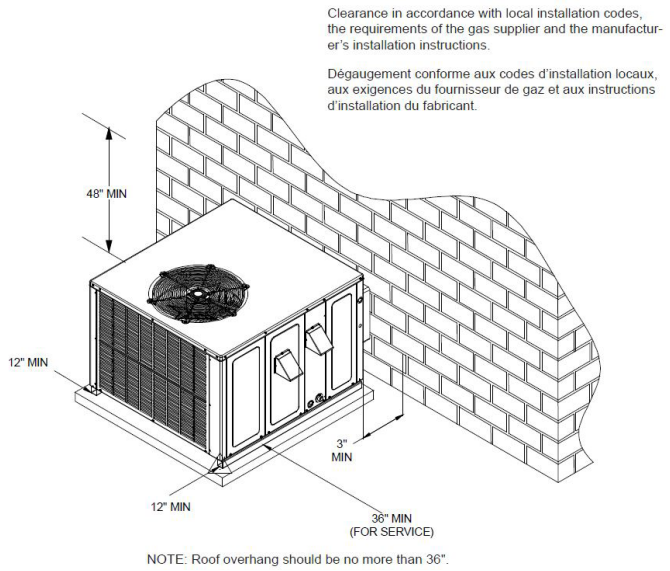

Outside Slab Installation

Rooftop Installations Only:

NOTE: To ensure proper condensate drainage, unit must be installed in a level position.

- To avoid possible property damage or personal injury, the roof must have sufficient structural strength to carry the weight of the unit(s) and snow or water loads as required by local codes. Consult a structural engineer to determine the weight capabilities of the roof.

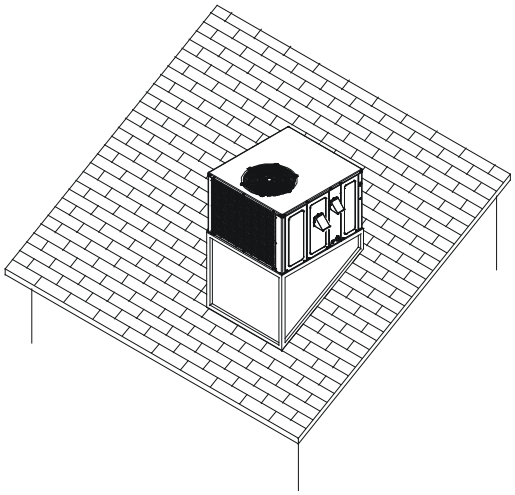

Rooftop Installation

- The unit may be installed directly on wood floors or on Class A, Class B, or Class C roof covering material.
- To avoid possible personal injury, a safe, flat surface for service personnel should be provided.

Roof Curb Installations Only:

- Sufficient structural support must be determined prior to locating and mounting the curb and package unit.
- Ductwork must be constructed using industry guidelines. The duct work must be placed into the roof curb before mounting the package unit.
- Curb insulation, cant strips, flashing and general roofing material are furnished by the contractor.

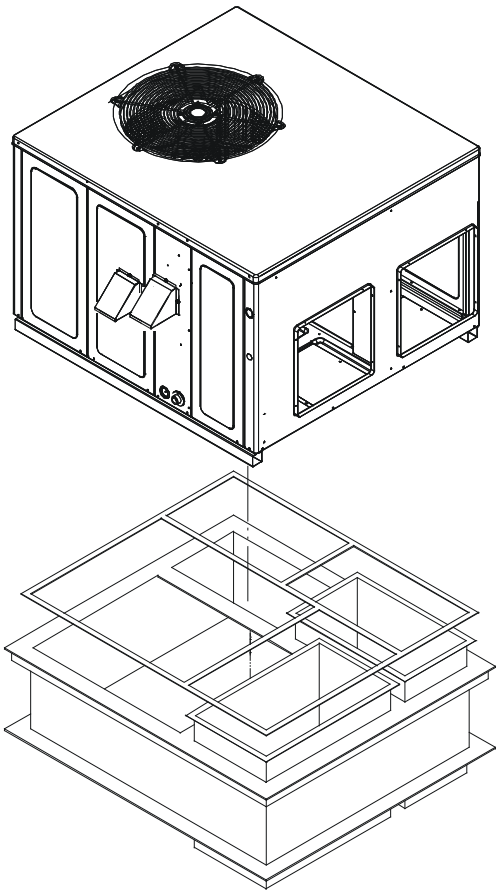

Roof Curb Installation

Model	Roof Curb
A/GPDM3(24-48)***31**	D14CRBPGCHMA

RIGGING DETAILS

WARNING

To prevent property damage, the unit should remain in an upright position during all rigging and moving operations. To facilitate lifting and moving when a crane is used, place the unit in an adequate cable sling.

Important: If using bottom discharge with roof curb, ductwork should be attached to the curb prior to installing the unit. Ductwork dimensions are shown in roof curb installation instructions.

Refer to the Roof Curb Installation Instructions for proper curb installation. Curbing must be installed in compliance with the National Roofing Contractors Association Manual.

Lower unit carefully onto roof mounting curb. While rigging unit, center of gravity will cause condenser end to be lower than supply air end.

Unit should be lifted by the **4 holes** located at the **base frame corners**. Lifting cables should be attached to the unit with shackles. While rigging unit, center of gravity will cause the condenser end (heavier) to be lower than supply air end. The distance between the unit and the crane hook up should not be **less** than **60".** The spreaders bars should span over the unit to prevent damage to the cabinet from the lifting cables.

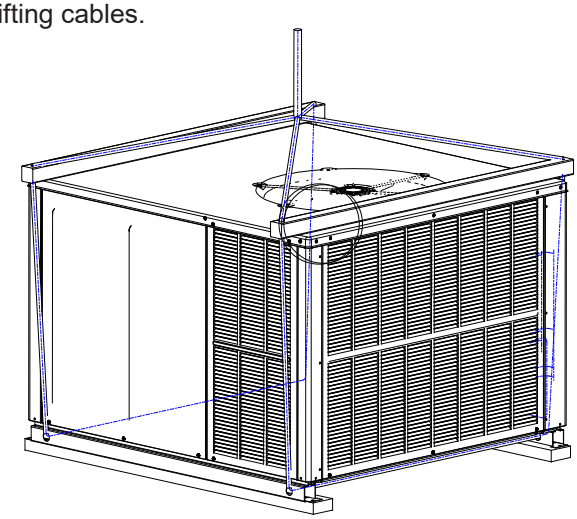

RIGGING

GAS PIPING

To assist in determining rigging requirements, unit weights and center of gravity are shown as follows:

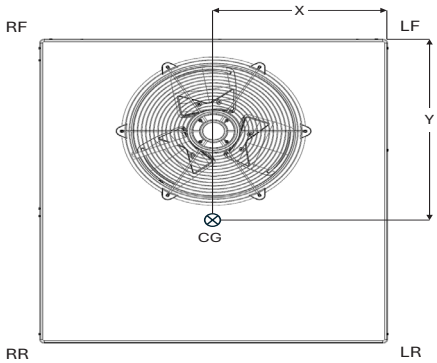

CORNER AND CENTER OF GRAVITY LOCATIONS

Model	Shipping Weight (lb)	Operating Weight (lb)	Corner Weights (lb)				X (in)	Y (in)
			LF	LR	RF	RR		
A/GPGM32406031	383	373	39	120	157	57	26.97	24.20
A/GPGM33006031	402	377	50	104	167	56	27.80	21.64
A/GPGM33608031	396	386	68	99	149	70	26.67	22.33
A/GPGM34208031	465	455	64	125	200	66	27.48	21.41
A/GPGM34810031	466	456	64	125	200	67	27.52	21.47
A/GPGM36012031	512	502	106	125	171	100	25.30	22.86

NOTE: UNIT SHOULD BE LIFTED AT A POINT ABOVE THE CENTER OF GRAVITY.

IMPORTANT NOTE: THIS UNIT IS FACTORY SET TO OPERATE ON NATURAL GAS AT THE ALTITUDES SHOWN ON THE RATING PLATE.

WARNING

TO AVOID PROPERTY DAMAGE, PERSONAL INJURY OR DEATH WHEN EITHER USING PROPANE GAS ALONE OR AT HIGHER ALTITUDES, OBTAIN AND INSTALL THE PROPER CONVERSION KIT(S). FAILURE TO DO SO CAN RESULT IN UNSATISFACTORY OPERATION AND/OR EQUIPMENT DAMAGE. HIGH ALTITUDE KITS ARE FOR U.S. INSTALLATIONS ONLY AND ARE NOT APPROVED FOR USE IN CANADA.

The rating plate is stamped with the model number, type of gas and gas input rating. Make sure the unit is equipped to operate on the type of gas available. Conversion to LP gas is permitted with the use of the factory authorized conversion kit LPM-07, for use with single stage models, or LPM-08, for use with two-stage models. See table below.

LP Conversion Kit	Model
LPM-07	Single Stage Heating Models
LPM-08	Two-Stage Heating Models

Inlet Gas Pressure	
Natural	Min. 5.0" W.C., Max. 10.0" W.C.
Propane	Min. 11.0" W.C., Max. 13.0" W.C.

Inlet Gas Pressure must be within the minimum and maximum value shown in table above.

The minimum supply pressure should not vary from that shown in the table above because this could prevent the unit from having dependable ignition. In addition, gas input to the burners must not exceed the rated input shown on the rating plate. Over firing of the unit could result in premature heat exchanger failure.

HIGH ALTITUDE DERATE (U.S. INSTALLATIONS ONLY)
IMPORTANT NOTE: THE GAS/ELECTRIC UNITS NATURALLY DERATE WITH ALTITUDE. DO NOT ATTEMPT TO INCREASE THE FIRING RATE BY CHANGING ORIFICES OR INCREASING THE MANIFOLD PRESSURE. THIS CAN CAUSE POOR COMBUSTION AND EQUIPMENT FAILURE. AT ALL ALTITUDES, THE MANIFOLD PRESSURE MUST BE WITHIN 0.3 INCHES W.C. OF THAT LISTED ON THE NAMEPLATE FOR THE FUEL USED. AT ALL ALTITUDES AND WITH EITHER FUEL, THE AIR TEMPERATURE RISE MUST BE WITHIN THE RANGE LISTED ON THE UNIT NAMEPLATE.

Refer to the Installation Manual provided with the LP kit for conversion from natural gas to propane gas and for altitude adjustments. **NOTE:** Up to 2,000 feet, no changes are required; above 2,000 feet, please refer to the gas/electric package unit specification sheets for required kit(s). Use HA03 for installations above 2000'.

Installation of the gas/electric unit at altitudes above 2000 ft (610m) shall be made in accordance with the listed High Altitude Conversion Kit available for this gas/electric unit.

Piping

IMPORTANT NOTE: To avoid possible unsatisfactory operation or equipment damage due to under firing of equipment, do not undersize the natural/propane gas piping from the meter/tank to the unit. When sizing a trunk line, include all appliances on that line that could be operated simultaneously.

The rating plate is stamped with the model number, type of gas and gas input rating. Make sure the unit is equipped to operate on the type of gas available. The gas line installation must comply with local codes, or in the absence of local codes, with the latest edition of the National Fuel Gas Code NFPA 54/ANSI Z223.1.

Natural Gas Connection

Natural Gas Capacity of Pipe in Cubic Feet of Gas Per Hour (CFH)					
Length of Pipe in Feet	Nominal Black Pipe Size (inches)				
	1/2	3/4	1	1 1/4	1 1/2
10	132	278	520	1050	1600
20	92	190	350	730	1100
30	73	152	285	590	980
40	63	130	245	500	760
50	56	115	215	440	670
60	50	105	195	400	610
70	46	96	180	370	560
80	43	90	170	350	530
90	40	84	160	320	490
100	38	79	150	305	460

Pressure = .50 PSIG or less and Pressure Drop of 0.3" W.C. (Based on 0.60 Specific Gravity Gas)

$$\text{CFH} = \frac{\text{BTUH Furnace Input}}{\text{Heating Value of Gas (BTU/Cubic Foot)}}$$

Refer to the Proper Piping Practice drawing for the general layout at the unit. The following rules apply:

1. Use black iron pipe and fittings for the supply piping. The use of a flex connector and/or copper piping is permitted as long as it is in agreement with local codes.
2. Use pipe joint compound on male threads only. Pipe joint compound must be resistant to the action of the fuel used.
3. Use ground joint unions.
4. Install a drip leg to trap dirt and moisture before it can enter the gas valve. The drip leg must be a minimum of three inches long.
5. Use two pipe wrenches when making connection to the gas valve to keep it from turning.
6. Install a manual shut-off valve in a convenient location (within six feet of unit) between the meter and the unit.
7. Tighten all joints securely.
8. The unit must be connected to the building piping by one of the following methods:

- Rigid metallic pipe and fittings
- Semirigid metallic tubing and metallic fittings (Aluminum alloy tubing must not be used in exterior locations)
- Listed gas appliance connectors used in accordance with the terms of their listing that are completely in the same room as the equipment
- In the prior two methods above the connector or tubing must be protected from physical and thermal damage. Aluminum alloy tubing and connectors must be coated to protect against external corrosion when in contact with masonry, plaster or insulation or are subject to repeated wettings by liquids (water - not rain water, detergents or sewage)

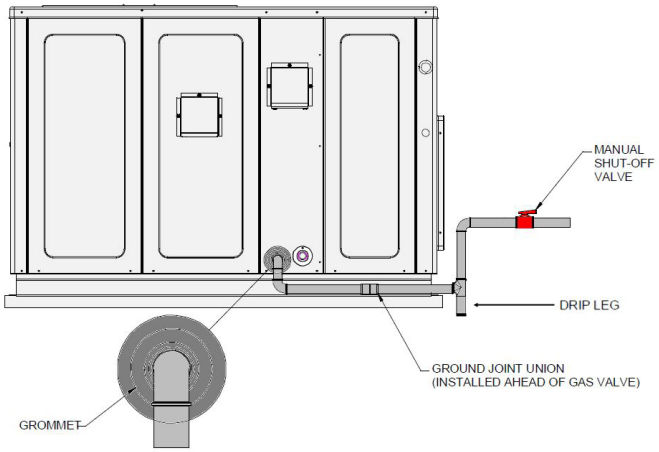

Proper Piping Practice

NOTE: The unit gas supply entrance is factory sealed with plugs. Keep plugs in place until gas supply is ready to be installed. Once ready, replace the plugs with the supplied grommets and install gas supply line.

Gas Piping Checks

CAUTION

To prevent property damage or personal injury due to fire, the following instructions must be performed regarding gas connections and pressure testing.

- **The unit and its gas connections must be leak tested before placing in operation. Because of the danger of explosion or fire, never use a match or open flame to test for leaks. Never exceed specified pressures for testing. Higher pressure may damage gas valve and causing overfiring which may result in premature heat exchange failure.**
- **This unit and its shut-off valve must be disconnected from the gas supply during any pressure testing of that system at the test pressures in exceed of 1/2 PSIG (3.48 kPA).**
- **This unit must be isolated from the gas supply system by closing its manual shut-off valve during any pressure testing of the gas supply piping system at test pressures equal to or less than 1/2 PSIG (3.48 kPA).**

- There will be air in the gas supply line after testing for leaks on a new installation. Therefore, the air must be bled from the line by loosening the ground joint union until pure gas is expelled. Tighten union and wait for five minutes until all gas has been dissipated in the air. Be certain there is no open flame in the vicinity during air bleeding procedure. The unit is placed in operation by closing the main electrical disconnect switch for the unit.

WARNING

To avoid property damage or personal injury, BE SURE THERE IS NO OPEN FLAME IN THE VICINITY DURING AIR BLEEDING.

PROPANE GAS INSTALLATIONS

WARNING

TO AVOID PROPERTY DAMAGE, PERSONAL INJURY OR DEATH DUE TO FIRE OR EXPLOSION CAUSED BY A PROPANE GAS LEAK, INSTALL A GAS DETECTING WARNING DEVICE. SINCE RUST CAN REDUCE THE LEVEL OR ODORANT IN PROPANE GAS, A GAS DETECTING WARNING DEVICE IS THE ONLY RELIABLE WAY TO DETECT A PROPANE GAS LEAK. CONTACT A LOCAL PROPANE GAS SUPPLIER ABOUT INSTALLING A GAS DETECTING WARNING DEVICE.

IMPORTANT NOTE: PROPANE GAS CONVERSION KITS MUST BE INSTALLED TO CONVERT UNITS TO PROPANE GAS.

For Natural gas to LP gas conversion, Conversion Kit “LPM-07” (Single stage models) and “LPM-08” (Two stage models) must be used. Consult your dealer for appropriate conversion kit(s).

All propane gas equipment must conform to the safety standards of the NFPA 58 -Liquefied Petroleum Gas Code. For satisfactory operation, propane gas supply pressure must be within 9.7 - 10.3 inches W.C. at the manifold with all gas appliances in operation. Maintaining proper gas pressure depends on three main factors:

1. Vaporization rate, which depends on (a) temperature of the liquid, and (b) wetted surface area of the container or containers.
2. Proper pressure regulation.
3. Pressure drop in lines between regulators, and between second stage regulator and the appliance. Pipe size required will depend on length of pipe run and total load of all appliances.

TANKS AND PIPING

Complete information regarding tank sizing for vaporization, recommended regulator settings and pipe sizing is available from most regulator manufacturers and propane gas suppliers.

Since propane gas will quickly dissolve white lead or most standard commercial compounds, special pipe dope must be used. Shellac base compounds resistant to the actions of liquefied petroleum gases such as Gasolac®, Stalactic®, Clyde’s® or John Crane® are satisfactory.

See below for typical propane gas piping.

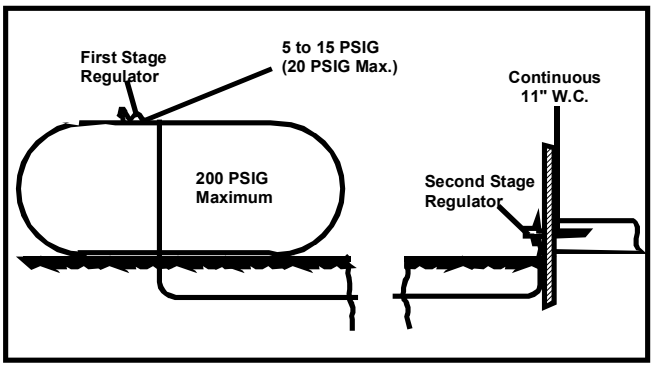

TYPICAL PROPANE GAS PIPING

Sizing Between First and Second Stage Regulator
Maximum Propane Capacities listed are based on 1 PSIG Pressure Drop at 10 PSIG Setting. Capacities in 1,000 BTU/HR

PIPE OR TUBING LENGTH, FEET	TUBING SIZE, O.D., TYPE L					NOMINAL PIPE SIZE, SCHEDULE 40	
	3/8"	1/2"	5/8"	3/4"	7/8"	1/2"	3/4"
30	309	700	1,303	2,205	3,394	1,843	3,854
40	265	599	1,115	1,887	2,904	1,577	3,298
50	235	531	988	1,672	2,574	1,398	2,923
60	213	481	896	1,515	2,332	1,267	2,649
70	196	446	824	1,394	2,146	1,165	2,437
80	182	412	767	1,297	1,996	1,084	2,267
90	171	386	719	1,217	1,873	1,017	2,127
100	161	365	679	1,149	1,769	961	2,009
150	130	293	546	923	1,421	772	1,613
200	111	251	467	790	1,216	660	1,381
250	90	222	414	700	1,078	585	1,224
300	89	201	378	634	976	530	1,109
350	82	185	345	584	898	488	1,020
400	76	172	321	543	836	454	949

To convert to Capacities at 15 PSIG Settings -- Multiply by 1.130
To convert to Capacities at 5 PSIG Settings -- Multiply by 0.879

Sizing Between Single or Second Stage Regulator and Appliance*
Maximum Propane Capacities Listed are Based on 1/2" W.C. Pressure Drop at 11" W.C. Setting. Capacities in 1,000 BTU/HR

PIPE OR TUBING LENGTH, FEET	TUBING SIZE, O.D., TYPE L					NOMINAL PIPE SIZE, SCHEDULE 40				
	3/8"	1/2"	5/8"	3/4"	7/8"	1/2"	3/4"	1"	1-1/4"	1-1/2"
10	49	110	206	348	539	291	608	1,146	2,353	3,525
20	34	76	141	239	368	200	418	788	1,617	2,423
30	27	61	114	192	296	161	336	632	1,299	1,946
40	23	52	97	164	253	137	284	541	1,111	1,665
50	20	46	86	146	224	122	255	480	985	1,476
60	19	42	78	132	203	110	231	436	892	1,337
80	16	36	67	113	174	94	198	372	764	1,144
100	14	32	59	100	154	84	175	330	677	1,014
125	12	28	52	89	137	74	155	292	600	899
150	11	26	48	80	124	67	141	265	544	815
200	10	22	41	69	106	58	120	227	465	697
250	9	19	36	61	94	51	107	201	412	618
300	8	18	33	55	85	46	97	182	374	560
350	7	16	30	51	78	43	89	167	344	515
400	7	15	28	47	73	40	83	156	320	479

*DATA IN ACCORDANCE WITH NFPA PAMPHLET NO. 54

TABLE 3 - PROPANE GAS PIPE SIZING

WARNING

TO PREVENT PROPERTY DAMAGE OR SERIOUS PERSONAL INJURY DUE TO FIRE OR EXPLOSION CAUSED BY PROPANE GAS LEAK, INSTALL A GAS DETECTING WARNING DEVICE. IF THE PROPANE GAS UNIT IS INSTALLED IN AN EXCAVATED AREA OR A CONFINED SPACE, A WARNING DEVICE IS REQUIRED DUE TO:

- **PROPANE GAS IS HEAVIER THAN AIR AND ANY LEAKING GAS CAN SETTLE IN ANY LOW AREAS OR CONFINED SPACES.**
- **PROPANE GAS ODORANT MAY FADE, MAKING THE GAS UNDETECTABLE EXCEPT WITH A WARNING DEVICE.**

ELECTRICAL WIRING

Thermostat Location

Mount the thermostat approximately five feet above the floor, in an area that has an inside, vibration-free wall and has good air circulation.

Movement of air must not be obstructed by furniture, door, draperies, etc. The thermostat must not be mounted where it will be affected by drafts, hot or cold water pipes or air ducts in walls, radiant heat from fireplace, lamps, the sun, television, etc. Consult the Instruction Sheet packaged with thermostat for mounting instructions.

WARNING

HIGH VOLTAGE
Disconnect all power before servicing or installing this unit. Multiple power sources may be present. Failure to do so may cause property damage, personal injury or death.

Five ton models have two stages of heating and two stages of mechanical cooling. Units which have economizers may use thermostats with two or three stages of cooling.

All other units have one stage of heating and one stage of mechanical cooling. Units which have economizers may use thermostats with one or two stages of cooling.

The units are designed for operation on 60 hertz current and at voltages as shown on the rating plate. All internal wiring in the unit is complete. It is necessary to bring in the power supply to the contactor as shown on the unit wiring diagram which is supplied with each unit. 24 volt wiring must be connected between the unit control panel and the room thermostat.

Thermostat Wiring - Single Stage Models

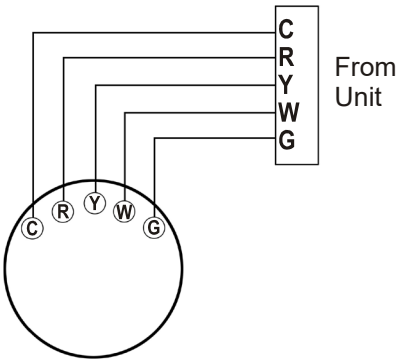

Single Stage Heating & Cooling Thermostat Diagram
Thermostat Wiring - Two Stage Models

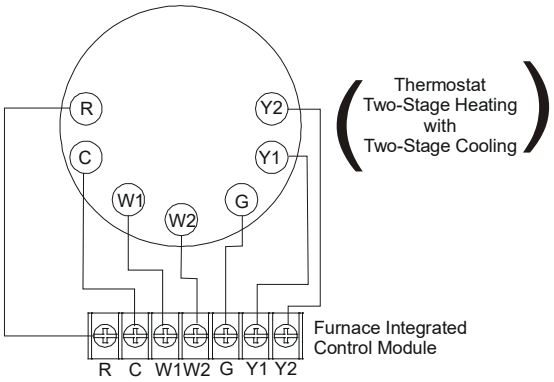

Two-Stage Heating with Two-Stage Cooling Thermostat Diagram

Single Stage Thermostat - Two-Stage Models

To use a single stage thermostat, move jumper located to the left of the terminal strip labeled “Stage Delay” from NONE to “5” or “10” minutes. This selection will cause the control to run on low stage for the selected time (5 or 10 minutes) then shift to HIGH STAGE. This option controls both cooling and heating modes. If the jumper is not moved, only low-stage cool and low-stage heat will operate.

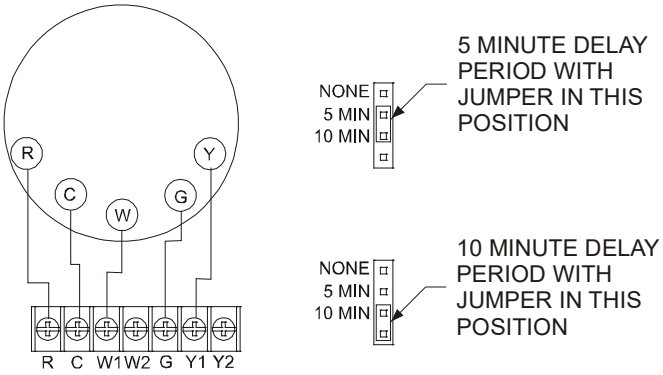

Two-Stage Heating (timed) and Two-Stage Cooling (timed) with Single Stage Thermostat Diagram

Refer to the unit wiring diagram for electrical connections. When installed, the unit must be electrically grounded in accordance with local codes or in the absence of local codes, with the National Electrical Code, ANSI/NFPA No. 70, and/or the CSA C22.1 Electrical Code. Ensure low voltage connections are waterproof.

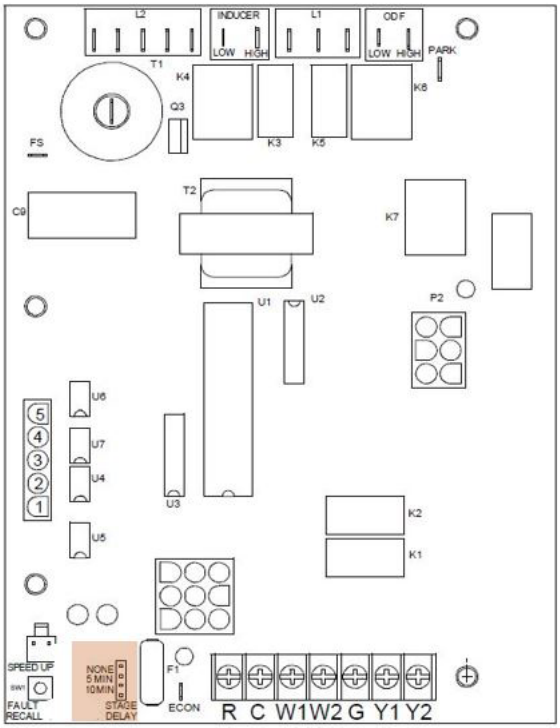

PCBAG127 Ignition Module

PCBAG127 (Stage Delay)

WARNING

To avoid the risk of electrical shock, wiring to the unit must be polarized and grounded.

CAUTION

To avoid property damage or personal injury due to fire, use only copper conductors.

CAUTION

To prevent improper and dangerous operation due to wiring errors, label all wires prior to disconnection when servicing controls. Verify proper operation after servicing.

For unit protection, use a time delay fuse or hacr circuit breaker that is in excess of the circuit ampacity, but less than or equal to the maximum overcurrent protection device. DO NOT EXCEED THE MAXIMUM OVERCURRENT DEVICE SIZE SHOWN ON UNIT DATA PLATE.

Unit Voltage

Rated Voltage	Minimum Supply Voltage	Maximum Supply Voltage
208/240V	197	253

All line voltage connections must be made through weatherproof fittings. All exterior power supply and ground wiring must be in approved weatherproof conduit.

NOTE: A dedicated ground wire must be run from the unit to the electrical panel.

DO NOT use gas piping, or conduit as an electrical ground.

Low voltage wiring from the unit control panel to the thermostat requires coded cable. See below for ground level and rooftop wiring.

NOTE: The unit transformer is factory connected for 240V operation. If the unit is to operate on 208V, reconnect the transformer primary lead as shown on the unit wiring diagram.

NOTE: 5 ton models - The induced draft blower on some models is equipped with a low speed 240V lead (blue) and a low speed 208V lead (black). If the unit is to operate on 208V, connect the induced draft blower low speed 208V lead (black) in place of the low speed 240V lead (blue). Place the unused 240V lead on the "PARK" terminal located on ignition control board.

NOTE: Units are equipped with a single pole contactor. Caution must be exercised when servicing as only one phase of the power supply is broken with the contactor.

Connect incoming power leads to terminals L1 & L2 on contactor in the electrical control section, using wire sizes specified in wiring table.

BRANCH CIRCUIT AMPACITY	15	20	25	30	35	40	45	50
SUPPLY WIRE LENGTH - FEET								
200	6	4	4	4	3	3	2	2
150	8	6	6	4	4	4	3	3
100	10	8	8	6	6	6	4	4
50	14	12	10	10	8	8	6	6

Wiring Table

CIRCULATING AIR AND FILTERS

Airflow Conversion

Units can easily be converted from horizontal to down-discharge airflow delivery. In down-discharge or high static installations, the installer should measure the total external static and review the blower performance charts before performing the installation. In some installations it will be necessary to change the blower speed to provide proper air flow.

Horizontal Air Flow

Single phase models are shipped without horizontal duct covers. If needed, these kits may be ordered through Goodman's Service Parts department.

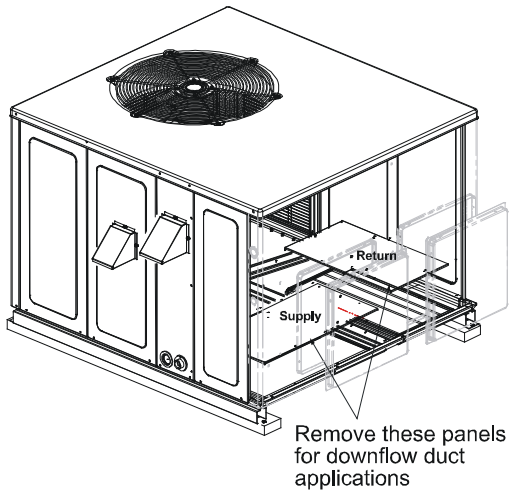

Duct Cover Installation

Down Discharge Applications

Cut insulation around bottom openings and remove panels from the bottom of the unit, saving the screws holding the panels in place.

NOTE: Single phase models require installation of horizontal duct kit #20464501PDGK (medium chassis) and #20464502PDGK (large chassis). See "Unit Dimensions" section for chassis sizes.

Ductwork

Duct systems and register sizes must be properly designed for the C.F.M. and external static pressure rating of the unit. Ductwork should be designed in accordance with the recommended methods of Air Conditioning Contractors of America Manual D (Residential) or Manual Q (Commercial). All ductwork exposed to the outdoors must include a weatherproof barrier and adequate insulation.

False ceilings or drop ceilings may be used as a return air plenum.

NOTE: Adequate return grills have to be supplied for each room for proper return for that space.

NOTE: Proper sealing of all ductwork and air handling compartments is extremely important to overall unit efficiency.

A duct system should be installed in accordance with Standards of the National Fire Protection Association (NFPA) for the Installation of Air Conditioning, Warm Air Heating and Ventilating Systems. Pamphlets No. 90A and 90B.

The supply duct from the unit through a wall may be installed without clearance. However, minimum unit clearances as shown in the appendix must be maintained. The supply duct should be provided with an access panel large enough to inspect the air chamber downstream of the heat exchanger. A cover should be tightly attached to prevent air leaks.

For duct flange dimensions on the unit refer to the Unit Dimension illustration in the appendix.

For down-discharge applications, the ductwork should be attached to the roof curb prior to installing the unit. Ductwork dimensions are shown in the roof curb installation manual.

If desired, supply and return duct connections to the unit may be made with flexible connections to reduce possible unit operating sound transmission.

Filters

CAUTION

To prevent property damage due to fire and loss equipment efficiency or equipment damage due to dust and lint build up on internal parts, never operate unit without an air filter installed in the return air system.

Even though a return air filter is not supplied with this unit, there must be a means of filtering all return air. All units may be externally filtered.

Refer to the unit filter size chart for filter size information. Filters installed external to the unit should be sized in accordance with their manufacturer recommendations. A throwaway filter must be sized for a maximum face velocity of 300 feet per minute.

Filter Installation

IMPORTANT: When installing a filter, the air flow arrows on the filter must point toward the circulator blower.

Unit	2 Ton	2 1/2 Ton	3 Ton	3 1/2 4 Ton	5 Ton
Min. Filter Size	(1)20 x 20 x 1	(1)20 x 25 x 1	(1)25 x 25 x 1	(2)20 x 20 x 1	2(20) x 25 x1

Recommended Filter Sizes

VENTING

NOTE: Venting is self-contained. Do not modify or block.

Flue Hood Installation

Install the exhaust flue hood and combustion air intake hood prior to operation of the unit.

To install the flue hood cover, please refer to the installation instructions, included in the flue hood assembly package located in the blower compartment.

Installation - Flue Hood Exhaust

1. Locate the flue hood assembly box in the unit.
2. Slide screen over flanges on the lower flue hood.
3. Slide screen and lower flue hood into hood.
4. Using the three screws provided, attach the hood (with the opening facing down) over the flue exhaust opening in the utility panel.

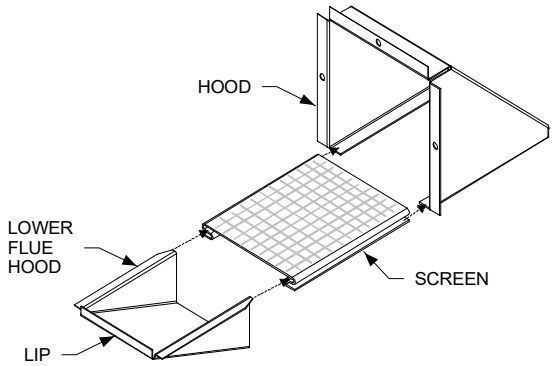

Installation - Combustion Air Intake Hood

1. Locate the second hood.
2. Using the three screws provided, attach the hood (with the opening facing down) to the heat exchanger access door.

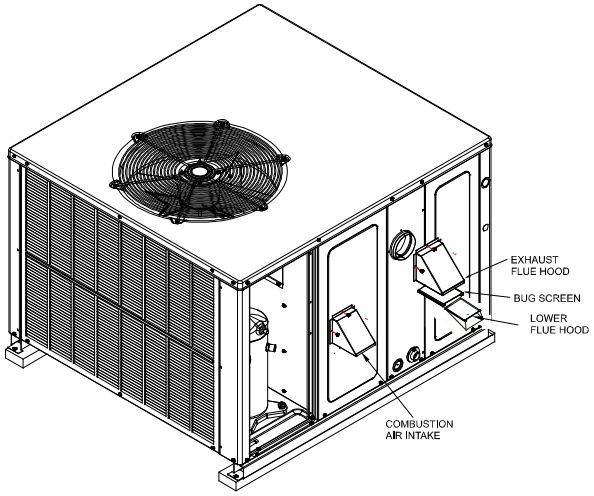

Flue Hood and Bug Screen Installation

CONDENSATE DRAIN

Condensate Drain Connection

A ¾" NPT drain connection is supplied for condensate piping. An external trap must be installed for proper condensate drainage. **NOTE:** Maximum torque is 10 in-lbs.

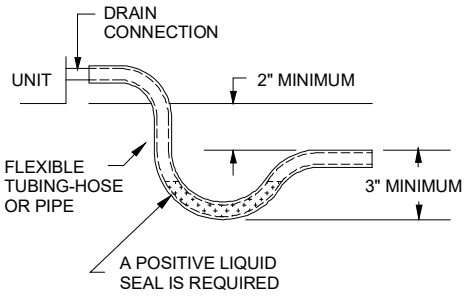

Drain Connection

NORMAL SEQUENCES OF OPERATION

Heating

This unit is equipped with an ignition control that automatically lights the main burner. DO NOT attempt to light the main burners by any other method.

Single-Stage Models:

NOTE: Ignition control begins timing the HEAT FAN OFF delay. There is an adjustable HEAT FAN OFF delay of approximately 120/135/150 seconds (factory set at 150). After the HEAT FAN OFF delay time has elapsed, the blower will de-energize. This allows any additional heat in the heat exchanger to be transferred to the conditioned space.

1. Thermostat calls for heat.
2. The induced draft blower energizes for a 15-second pre-purge.
3. The spark igniter and gas valve energizes for 7 seconds. **NOTE:** The igniter produces a very intense electrical spark that ignites the gas.
4. Main burners light and control detects presence of flame.
5. The 30-second HEAT FAN ON delay time begins after the main burners light.
6. The unit delivers heat to the conditioned space until the thermostat is satisfied.
7. The gas valve de-energizes. The induced draft blower continues operation for a 29-second post-purge.

Two-Stage Models:

If the call is for low stage heat, the induced draft blower switches to low speed and the high stage gas valve closes 5 seconds after the main burners light. If call is for high stage heat, induced draft blower remains at high speed and high stage gas valve remains open.

There is an adjustable HEAT FAN OFF delay of approximately 90/120/150/180 seconds (factory set at 150). If the unit is operating at high stage when the call for heat is removed, the blower will operate for 30 seconds at high heat speed then switch to low heat speed for the remainder of the selected HEAT FAN OFF delay.

NOTE: If a single stage thermostat is used, the control will step to low stage after the main burners light and remain at low stage for 5 or 10 minutes, depending on jumper position. If the call for HEAT remains after the transition delay time expires, the control will transition from low stage to high stage.

Induced draft blower remains at low speed (or switches from high to low if operating at high stage heat) for the 30-second post purge.

Cooling

1. Thermostat calls for cooling. The compressor and outdoor fan are energized.

Two-Stage Models:
If the thermostat call is for low stage cooling, the compressor and outdoor fan are energized at low stage. If the thermostat call is for high stage cooling, the compressor and outdoor fan are energized at high stage.

2. Approximately seven seconds later, the indoor fan starts.
3. The unit will deliver cooling to the conditioned space until the thermostat is satisfied.
4. The compressor and outdoor fan will be de-energized when the thermostat opens.
5. The indoor fan continues to run for approximately 60 seconds after the thermostat is satisfied.

Two-Stage Models:
The fan runs at low cool speed for the off delay period. This allows additional cooling from the indoor coil to be transferred to the conditioned space. Then, the indoor fan stops.

NOTE: A 180-second anti-short cycle is integral to the control and prevents recycling of the compressor.

Fan Only
Thermostat calls for FAN ONLY by energizing “G”.

Single-Stage Models:
1. Approximately seven seconds later, the indoor fan starts.
2. The indoor fan continues to run for approximately 60 seconds after thermostat “G” is de-energized.

Two-Stage Models:
1. The indoor fan is immediately energized at low heat speed.
2. The indoor fan is immediately de-energized once the thermostat “G” is de-energized.

STARTUP, ADJUSTMENTS, AND CHECKS

Heating Startup
This unit is equipped with an electronic ignition device to automatically light the main burners. It also has a power vent blower to exhaust combustion products.

On new installations, or if a major component has been replaced, the operation of the unit must be checked.

Check unit operation as outlined in the following instructions. If any sparking, odors, or unusual sounds are encountered, shut off electrical power and recheck for wiring errors, or obstructions in or near the blower motors. Duct covers must be removed before operating unit.

Rollout Protection Control
The rollout protection device opens, cutting power to the gas valve, if the flames from the burners are not properly drawn into the heat exchanger. The rollout protection device is located on the burner bracket. The reason for elevated temperatures at the control should be determined and repaired prior to resetting this manual reset control.

WARNING

To avoid property damage, personal injury or death due to fire or explosion, a qualified servicer must investigate the reason for the rollout protection device to open before manually resetting the rollout protection device.

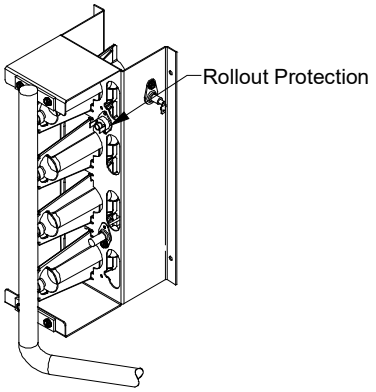

Rollout Protection on Burner Bracket

Secondary Limit Control
The secondary limit control is located on the top of the blower assembly. This control opens when elevated temperatures are sensed. Elevated temperatures at the control are normally caused by blower failure. The reason for the opening should be determined and repaired prior to resetting.

If the power to the unit is interrupted during the heating cycle, it may cause the secondary limit to trip. Once the blower compartment temperature drops below the limit reset temperature, the limit will automatically reset.

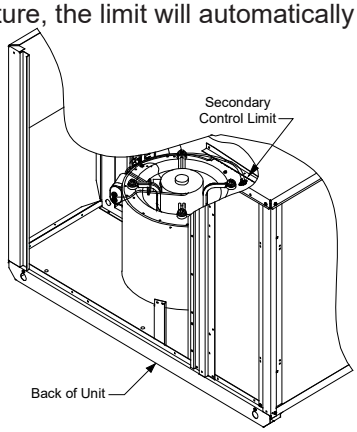

Secondary Limit Control

Pre-Operation Checks
1. Close the manual gas valve external to the unit.
2. Turn off the electrical power supply to the unit.
3. Set the room thermostat to its lowest possible setting.
4. Remove the heat exchanger door on the side of the unit by removing screws.
5. This unit is equipped with an ignition device which automatically lights the main burner. DO NOT try to light burner by any other method.
6. Move the gas control valve switch to the OFF position. Do not force.
7. Wait five minutes to clear out any gas.

8. Smell for gas, including near the ground. This is important because some types of gas are heavier than air. If you have waited five minutes and you do smell gas, immediately follow the warnings on page 3 of this manual. If having waited for five minutes and no gas smell is noted, move the gas control valve switch to the ON position.
9. Replace the heat exchanger door on the side of the unit.
10. Open the manual gas valve external to the unit.
11. Turn on the electrical power supply to the unit.
12. Set the thermostat to desired setting.

Gas Supply And Manifold Check

Gas supply pressure and manifold pressure with the burners operating must be as specified on the rating plate.

NOTE: Use adapter kit #0151K00000S to measure gas pressure on White-Rodgers 36J22 and 36G54 gas valves.

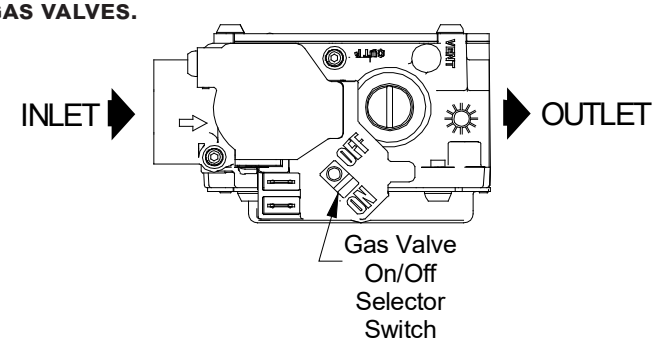

White-Rodgers 36J22 (Single Stage)

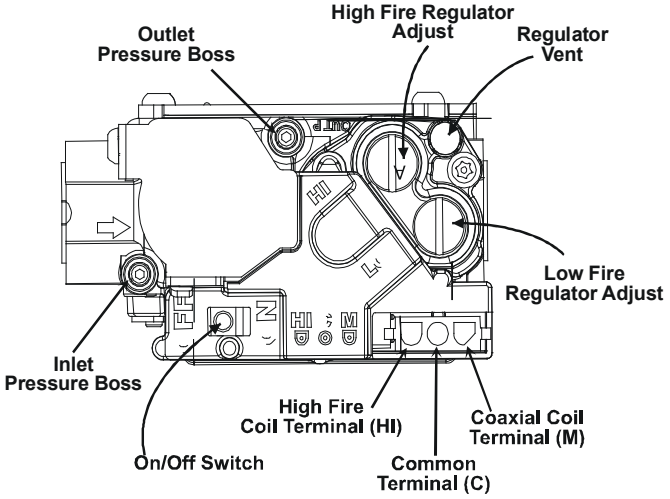

White-Rodgers Model 36G54 (Two Stage)

Gas Supply Pressure Measurement

CAUTION

To prevent unreliable operation or equipment damage, the inlet gas supply pressure must be as specified on the unit rating plate with all other household gas fired appliances operating.

WARNING

HIGH VOLTAGE
Disconnect all power before servicing or installing this unit. Multiple power sources may be present. Failure to do so may cause property damage, personal injury or death.

The line pressure supplied to the gas valve must be within the range specified in the Inlet Gas Supply Pressure table. The supply pressure can be measured at the gas valve inlet pressure tap or at a hose fitting installed in the gas piping drip leg. The supply pressure must be measured with the burners operating. To measure inlet pressure, use the following procedure.

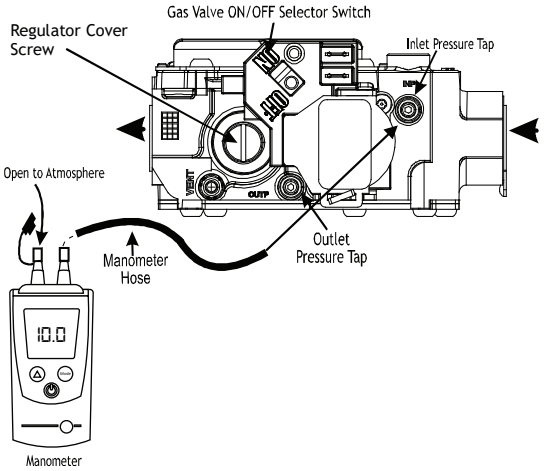

White-Rodgers Model 36J22 Connected to Manometer

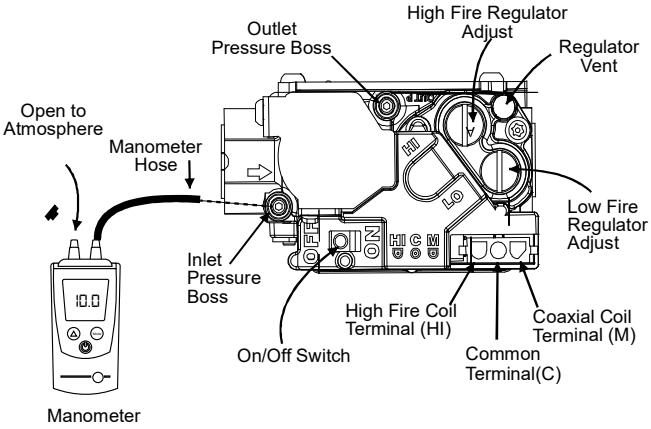

White-Rodgers Model 36G54 connected to Manometer

1. Turn OFF gas to furnace at the manual gas shutoff valve external to the furnace.
2. Turn OFF all electrical power to the system.
3. Inlet pressure tap connections:
   White-Rodgers 36J22 or 36G54 valve:
   Back inlet pressure test screw (inlet pressure boss) out one turn (counterclockwise, not more than one turn).
4. Attach a hose and manometer to the inlet pressure boss (White-Rodgers valve).

5. Turn ON the gas supply.
6. Turn On power and close thermostat “R” and “W” contacts, or “R” and “W1” + “W2” for two-stage models, to provide a call for heat.
7. Using a leak detection solution or soap suds, check for leaks at the inlet and outlet pressure taps (White-Rodgers valve). Bubbles forming indicate a leak. SHUT OFF GAS AND REPAIR ALL LEAKS IMMEDIATELY!
8. Measure the gas supply pressure with burners firing. Adjust supply pressure using the Inlet Gas Supply Pressure table shown below. If supply pressure reading differs from the table, make necessary adjustments to pressure regulator, gas piping size, etc., and/or consult with local gas utility.

Inlet Gas Supply Pressure	
Natural Gas	Minimum:5.0" W.C. Maximum :10.0" W.C.
Propane Gas	Minimum:11.0" W.C. Maximum :13.0" W.C.

9. Turn OFF all electrical power and gas supply to the system.
10. Remove the manometer hose from the inlet pressure boss.
    White-Rodgers 36J22 or 36G54 valve:
    Turn inlet pressure test screw in to seal pressure port (clockwise, 7 in-lb minimum).
12. Retest for leaks. If bubbles form, shut down gas and repair leaks immediately.
13. Turn ON electrical power and gas supply to the system.
14. Turn valve switch ON.

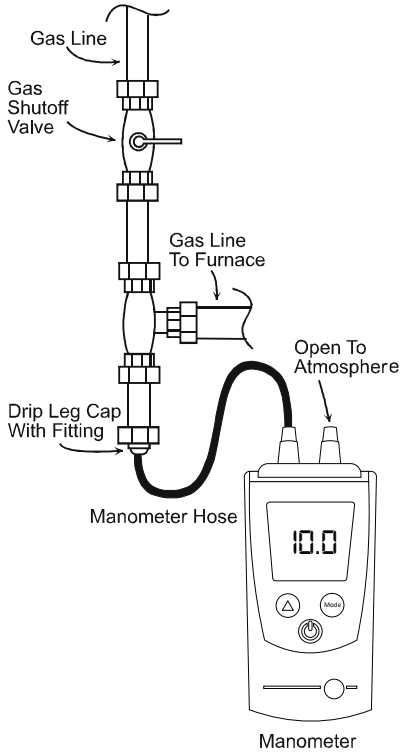

Measuring Inlet Gas Pressure (Alt. Method)

Gas Manifold Pressure Measurement and Adjustment

CAUTION

To prevent unreliable operation or equipment damage, the inlet gas supply pressure must be as specified on the unit rating plate with all other household gas fired appliances operating.

WARNING

HIGH VOLTAGE
Disconnect all power before servicing or installing this unit. Multiple power sources may be present. Failure to do so may cause property damage, personal injury or death.

This valve is shipped from the factory with the regulator preset (see control label).

Consult the appliance rating plate to ensure burner manifold pressure is as specified. If another outlet pressure is required, follow these steps.

1. Turn OFF gas to unit at the manual gas shutoff valve external to the unit.
2. Turn OFF all electrical power to the system.
3. Outlet pressure tap connections:
   White-Rodgers 36J22 or 36G54 valve:
   Back outlet pressure test screw (outlet pressure tap) out one turn (counterclockwise, not more than one turn).
4. Attach a hose and manometer to the outlet pressure tap (White-Rodgers valve).
5. Turn ON the gas supply.
6. Turn ON power and place unit into a heating cycle.

Single Stage Models: (White-Rodgers 36J22 valves): Close thermostat “R” and “W” contacts.

Two-Stage Models (White-Rodgers 36G54 valve): Close thermostat contacts “R” and “W1” contacts for low heat stage heating ONLY; do not energize high stage heat.

7. Using a leak detection solution or soap suds, check for leaks at outlet pressure boss plug or screw (White-Rodgers valve). Bubbles forming indicate a leak. SHUT OFF GAS AND REPAIR ALL LEAKS IMMEDIATELY!
8. Measure the gas manifold pressure with burners firing. Adjust manifold pressure using the Manifold Gas Pressure table shown below.
9. Regulator adjustment:

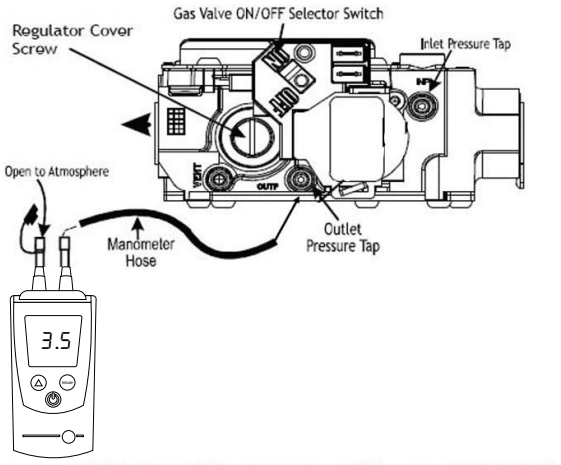

White-Rodgers Model 36J22 Connected to Manometer

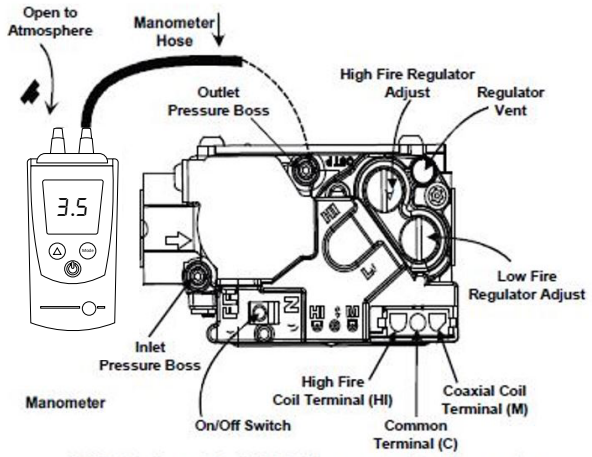

White-Rodgers Model 36G54 connected to Manometer

Single Stage Models (White-Rodgers 36J22 valve): Remove regulator cover screw from the outlet pressure regulator and turn screw clockwise to increase pressure or counterclockwise to decrease pressure. Replace regulator cover screw.

Two-Stage Models (White-Rodgers 36G54 valve): Remove regulator cover screw from the low (LO) outlet pressure regulator adjust tower and turn screw clockwise to increase pressure, or counterclockwise to decrease pressure.

Energize the "R", "W1", and "W2" contacts for high stage heat. Remove regulator cover screw from the HI outlet pressure regulator adjust tower and turn screw clockwise to increase pressure or counterclockwise to decrease pressure.

Manifold Gas Pressure			
Gas		Range	Nominal
Natural	Low Stage	1.6 - 2.2" w.c.	2.0" w.c.
	High or Single Stage	3.2 - 3.8" w.c.	3.5" w.c.
LP	Low Stage	5.7 - 6.3" w.c.	6.0" w.c.
	High or Single Stage	9.7 - 10.3" w.c.	10.0" w.c.

10. Turn OFF all electrical power and gas supply to the system.
11. Remove the manometer hose from the outlet pressure tap.
12. Replace outlet pressure tap:
    White-Rodgers 36J22 or 36G54 valve: Turn outlet pressure test screw in to seal pressure port (clockwise, 7 in-lb minimum).
13. Turn ON electrical power and gas supply to the system.
14. Close thermostat contacts to provide a call for heat.
15. Retest for leaks. If bubbles form, SHUT OFF GAS AND REPAIR ALL LEAKS IMMEDIATELY!

Gas BTU Input Check (Natural Gas Only)

To measure the gas input use a gas meter and proceed as follows:

1. Turn off gas supply to all other appliances except the unit.
2. With the unit operating, time the smallest dial on the meter for one complete revolution. If this is a 2 cubic foot dial, divide the seconds by 2; if it is a 1 cubic foot dial, use the seconds as is. This gives the seconds per cubic foot of gas being delivered to the unit.
3. INPUT=GAS HTG VALUE x 3600 / SEC. PER CUBIC FOOT

EXAMPLE: Natural gas with a heating value of 1000 BTU per cubic foot and 34 seconds per cubic foot as determined by Step 2, then:

Input = 1000 x 3600 / 34 = 106,000 BTU per Hour.

NOTE: BTU content of the gas should be obtained from the gas supplier. This measured input must not be greater than shown on the unit rating plate.

4. Relight all other appliances turned off in step 1. Be sure all pilot burners are operating.

Main Burner Flame Check

Flames should be stable, soft and blue (dust may cause orange tips but they must not be yellow) and extending directly outward from the burner without curling, floating or lifting off.

Temperature Rise Check

Check the temperature rise through the unit by placing thermometers in supply and return air registers as close to the unit as possible. Thermometers must not be able to sample temperature directly from the unit heat exchangers, or false readings could be obtained.

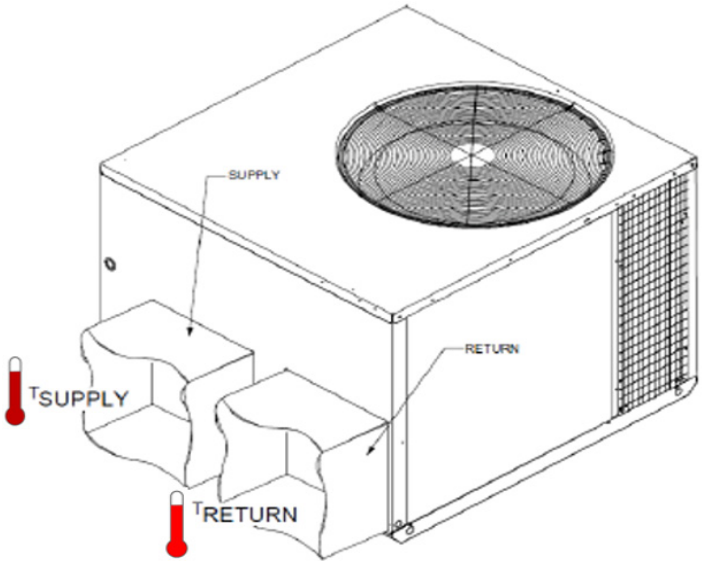

Checking Temperature Rise

1. All registers must be open; all duct dampers must be in their final (fully or partially open) position and the unit operated for 15 minutes before taking readings.
2. The temperature rise must be within the range specified on the rating plate.

NOTE: Air temperature rise is the temperature difference between supply and return air.

With a properly designed system, the proper amount of temperature rise will normally be obtained when the unit is operated at rated input with the recommended blower speed.

If the correct amount of temperature rise is not obtained, it may be necessary to change the blower speed. A higher blower speed will lower the temperature rise. A slower blower speed will increase the temperature rise.

NOTE: Blower speed MUST be set to give the correct air temperature rise through the unit as marked on the rating plate.

External Static Pressure Check

The total external static pressure must be checked on this unit to determine if the airflow is proper.

Total External Static Testing

1. Using a digital manometer measure the static pressure of the return duct at the inlet of the unit (Negative Pressure).

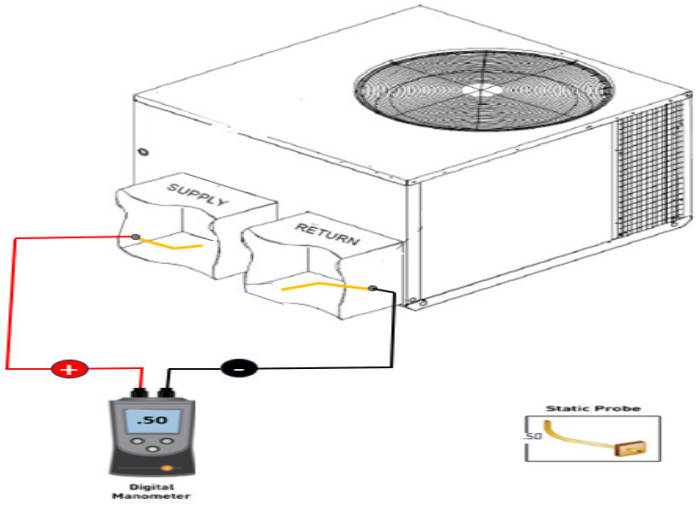

Total External Static

2. Measure the static pressure of the supply duct (Positive Pressure).
3. Add the two readings together.

EXAMPLE:
static reading from return duct = -.1” w.c.
static reading from supply duct = .3” w.c.
total external static pressure on this system = .4” w.c.

NOTE: Both readings may be taken simultaneously and read directly on the manometer if so desired.

4. Consult proper table for quantity of air.

If the external static pressure exceeds the maximum allowable static, check for closed dampers, dirty filters, undersized or poorly laid out ductwork.

Blower Speed Adjustments

Refer to the wiring diagram in the appendix to verify speed tap settings.

All models are equipped with EEM motors. EEM motors are constant torque motors with very low power consumption. This motor is energized by 24V. Adjust the CFM for the unit by changing the 24V low voltage leads to the speed terminal block on the motor.

Single Stage Models:

Heating-White Lead	Cooling-Yellow Lead
T1 - Low Speed	T4 - High Speed
T2 - Medium Speed	T5 - High Speed High Static
T3 - High Speed	

Two Stage Models:

HEATING			COOLING		
Speed Tap	Definition	Lead Color	Speed Tap	Definition	Lead Color
T1	Low Speed Heat	White	T3	Low Speed Cool	Purple
T2	High Speed Heat	Brown	T4	High Speed Cool	Yellow
			T5	High Speed Cool Hi-Static	

NOTE: Heating airflow must be adjusted to provide the temperature rise shown on rating plate.

Limit Check

Check limit control operation after 15 minutes of operation by blocking the return air grille(s).

1. After several minutes the main burners must go OFF. Blower will continue to run.
2. Remove air restrictions and main burners will relight after a cool down period of a few minutes.

Adjust the thermostat setting below room temperature.

1. Main burners must go OFF.
2. Circulating Air Blower will continue to run for 120, 135 or 150 seconds, (single stage models) or 90, 120, 150, or 180 seconds (two-stage models), depending on the setting.

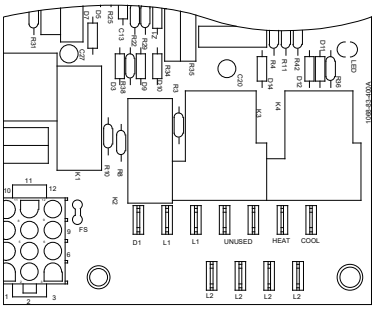

PCBAG123 Control Board (Single Stage)

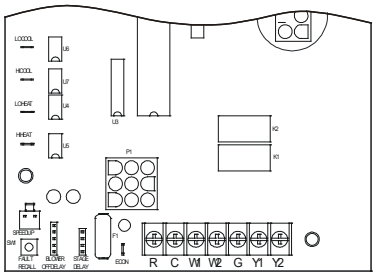

PCBAG127 Control Board (Two-Stage)

NOTE: If necessary, adjust fan OFF delay settings to obtain satisfactory comfort level.

WARNING

This unit must not be used as "construction heater" during the finishing phases of construction on a new structure. This type of use may result in premature failure of the unit due to extremely low return air temperatures and exposure to corrosive or very dirty atmospheres.

Unit Shutdown

1. Set the thermostat to lowest setting.
2. Turn off the electrical power supply to the unit.
3. Remove the heat exchanger door on the side of the unit by removing screws.
4. Move the gas control valve switch to the OFF position. Do not force.
5. Close manual gas shutoff valve external to the unit.
6. Replace the heat exchanger door on the unit.
7. If cooling and/or air circulation will be desired, turn ON the electrical power.

Cooling Startup

NOTE: The outdoor temperature must be 60°F or higher before making adjustments to charge.

Compressor Protection Devices

The compressor includes components which are designed to protect the compressor against abnormal operating conditions.

WARNING

To avoid property damage, personal injury or death, always disconnect electrical power before inspecting or servicing the unit. All compressor protection devices reset automatically, energizing the contactor and outdoor fan.

RDS Function

The mitigation system is a stationary device that detects the presence of R-32 refrigerant above 25% LFL using refrigerant sensors and then initiates mitigation actions. The mitigation system's primary function is to reduce the concentration of leaked R-32 refrigerant to prevent serious safety hazards. The mitigation actions are accomplished by halting HVAC operation and continuing indoor blower operation to provide airflow. Once refrigerant concentration reaches below a safe threshold, the unit will remain in mitigation mode for five minutes to evacuate any remaining R-32 refrigerant within the unit. Upon completion, the unit will resume its normal operation.

RDS Operation

The mitigation system is controlled by a refrigerant sensor(s), which is secured to a designated location(s) for active monitoring. If a leak is detected, HVAC operation is disabled and the indoor blower fan is activated, providing airflow at or above minimum required airflow to evacuate excess concentration. If a Zone Control system is installed in the ductwork attached to this system, the Zone controller must be powered through a Daikin Zoning/Accessory PCB to ensure that the Zoning Dampers open during mitigation mode to provide ventilation throughout all ducting. Once sensor(s) read concentration levels below a safe threshold, a five-minute timer will initiate. Once the time is over, the unit will resume back to its normal operation. If the sensor(s) detect another concentration excess, the unit will go back into mitigation mode and will repeat the same process.

Refrigerant Charge Check

After completing airflow measurements and adjustments the unit's refrigerant charge must be checked. The unit comes factory charged, but this charge is based on 325 CFM per ton and minimum ESP per AHRI test conditions (generally between .15 -.28 ESP). When air quantity or ESP is different than above, the refrigerant charge must be adjusted to the proper amount. All package units with fixed orifice devices are charged using the super heat method at the compressor suction line.

Checking Subcooling

NOTE: Units with a TXV should be charged to Subcooling only.

SUBCOOLING FORMULA = SATURATED LIQUID LINE TEMPERATURE - LIQUID LINE TEMPERATURE

EXAMPLE:

a. Liquid Line Pressure = 417 PSI
b. Corresponding Temp. = 120°F
c. Thermometer on Liquid line = 109°F.

To obtain the amount of subcooling, subtract 109°F from 120°F. The difference is 11° subcooling. See the specification sheet or technical information manual for the design subcooling range for your unit.

Checking Superheat

EXAMPLE:

a. Suction Pressure = 143 PSI
b. Corresponding Temp. = 50°F
c. Thermometer on Suction Line = 59°F

To obtain the degrees temperature of superheat, subtract 50.0 from 59.0°F. The difference is 9° Superheat. The 9° Superheat would fall in the ± range of allowable superheat.

SUPERHEAT = SUCTION LINE TEMP - SAT. SUCTION TEMP.

Superheat Adjustment

NOTE: Superheat adjustments should not be made until indoor ambient conditions have stabilized. This could take up to 24 hours depending on indoor temperature and humidity. Before checking superheat run the unit in cooling for 15-20 minutes or until refrigerant pressures stabilize. Use the following guidelines and methods to check unit operation and ensure that the refrigerant charge is within limits.

NOTE: TXV adjustments should not exceed one turn clockwise (CW) or counterclockwise (CCW) from the factory setting.

Unscrew the cover from the expansion valve, locate the adjustment screw, and turn it clockwise (in) to increase superheat or counterclockwise (out) to decrease superheat. It is recommended to make small adjustments at a time, ⅛-¼ turn increments. Replace adjustment cap. Wait a minimum of 15 minutes between adjustments to allow time for the TXV and pressures to stabilize.

Refrigerant Charge Check

NOTE: For optimal performance, follow charging instructions below.

(Units with Expansion valve (TXV))

Single Stage Cooling Application: Refer to the Design Superheat & Subcooling table.

Two-Stage Cooling Application: Run unit on Low Stage cooling and refer to Design Superheat & Subcooling table.

1. Purge gauge lines. Connect service gauge manifold to access fittings. Run system at least 10 minuets to allow pressure to stabilize.
2. Temporarily install thermometer on liquid (small) line near liquid line access fitting with adequate contact and insulate for best possible reading.
3. Check subcooling and superheat. System should have a subcooling and superheat within the range listed on the Design Superheat and Subcooling table.
   a. If subcooling and superheat are low, adjust TXV superheat, then check subcooling.
      NOTE: To adjust superheat, turn the valve stem clockwise to increase and counterclockwise to decrease. Refer to TXV superheat adjustment referenced in this manual.
   b. If subcooling is low and superheat is high, add charge to raise subcooling then check superheat.
   c. If subcooling and superheat are high, adjust TXV valve superheat, then check subcooling.
   d. If subcooling is high and superheat is low, adjust TXV valve superheat and remove charge to lower the subcooling.

NOTE: Do not adjust the charge based on suction pressure unless there is a gross undercharge. If an undercharge is suspected, recover the charge, re-evacuate the system, and recharge per data plate. No adjustments should be made if suspecting a charge issue.

4. Disconnect manifold set, installation is complete.

Design Superheat & Subcool					
Model	Superheat ±2°F	Subcooling ±1°F	Expansion Device	Cooling Stage	Outdoor Ambient
A/GPGM324***31	-	9.0	Piston	High	95
A/GPGM330***31	-	8.5	Piston	High	95
A/GPGM336***31	-	7.0	Piston	High	95
A/GPGM342***31	-	13.0	Piston	High	95
A/GPGM348***31	-	9.5	Piston	High	95
A/GPGM360***31	4.0	13.0	TXV	Low	82

Charging Procedures

In addition to conventional charging procedures, the following requirements shall be followed.

- Ensure that contamination of different refrigerants does not occur when using charging equipment. Hoses or lines shall be as short as possible to minimize the amount of refrigerant contained in them.
- Cylinders shall be kept in an appropriate position according to the instructions.
- Ensure that the REFRIGERATING SYSTEM is grounded prior to charging the system with refrigerant.
- Label the system when charging is complete (if not already).
- Extreme care shall be taken not to overfill the REFRIGERATING SYSTEM.

Prior to recharging the system, it shall be pressure-tested with the appropriate purging gas. The system shall be leak-tested on completion of charging but prior to commissioning. A follow up leak test shall be carried out prior to leaving the site.

NOTE: "Earthing" is defined as achieving an earth ground by connecting the equipment's supplied grounding lug to the earth. This should be verified by a certified technician.

Recovery

When removing refrigerant from a system, either for servicing or decommissioning, it is recommended good practice that all refrigerants are removed safely.

When transferring refrigerant into cylinders, ensure that only appropriate refrigerant recovery cylinders are employed. Ensure that the correct number of cylinders for holding the total system charge is available. All cylinders to be used are designated for the recovered refrigerant and labeled for that refrigerant (i.e. special cylinders for the recovery of refrigerant). Cylinders shall be complete with pressure-relief valve and associated shut-off valves in good working order. Empty recovery cylinders are evacuated and, if possible, cooled before recovery occurs.

The recovery equipment shall be in good working order with a set of instructions concerning the equipment that is at hand and shall be suitable for the recovery of the flammable refrigerant. If in doubt, the manufacturer should be consulted. In addition, a set of calibrated weighing scales shall be available and in good working order. Hoses shall be complete with leak-free disconnect couplings and in good condition.

The recovered refrigerant shall be processed according to local legislation in the correct recovery cylinder, and the relevant waste transfer note arranged. Do not mix refrigerants in recovery units and especially not in cylinders.

If compressors or compressor oils are to be removed, ensure that they have been evacuated to an acceptable level to make certain that flammable refrigerant does not remain within the lubricant. The compressor body shall not be heated by an open flame or other ignition sources to accelerate this process. When oil is drained from a system, it shall be carried out safely.

Cooling Operation

NOTE: Mechanical cooling cannot be reliably provided at ambient temperatures below 60° F.

1. Turn on the electrical power supply to the unit.
2. Place the room thermostat selector switch in the COOL position (or AUTO if available, and if automatic changeover from cooling to heating is desired).
3. Set the room thermostat to the desired temperature.

TROUBLESHOOTING

Ignition Control Error Codes

The following presents probable causes of questionable unit operation. Refer to Diagnostic Indicator Chart for an interpretation of the signal and to this section for an explanation.

Remove the control box access panel and note the number of diagnostic LED flashes. Refer to Diagnostic Indicator Chart for an interpretation of the signal and to this section for an explanation.

Fault Recall (Two-Stage Models ONLY)

The ignition control is equipped with a momentary push-button switch that can be used to display on the diagnostic LED the last five faults detected by the control. The control must be in Standby Mode (no thermostat inputs) to use the feature. Depress the push-button switch for approximately 2 seconds. **NOTE: Do not hold for longer than 4 seconds. Holding the button for 4 seconds or higher will erase the memory! Release the switch when the LED is turned off.** The diagnostic LED will then display the flash codes associated with the last five detected faults. The order of display is the most recent fault to the least recent fault.

Abnormal Operation - Heating

Internal Control Failure

If the integrated ignition control in this unit encounters an internal fault, it will go into a “hard” lockout and turn off the diagnostic LED. If diagnostic LED indicates an internal fault, check power supply to unit for proper voltage, check all fuses, circuit breakers and wiring. Disconnect electric power for five seconds. If LED remains off after restoring power, replace control.

External Lockout

An external lockout occurs if the integrated ignition control determines that a measurable combustion cannot be established within three (3) consecutive ignition attempts. If flame is not established within the seven (7) second trial for ignition, the gas valve is de-energized, 15 second inter-purge cycle is completed, and ignition is reattempted. The control will repeat this routine three times if a measurable combustion is not established. The control will then shut off the induced draft blower and go into a lockout state.

If flame is established but lost, the control will energize the circulator blower at the heat speed and then begin a new ignition sequence. If flame is established then lost on subsequent attempts, the control will recycle for four (4) consecutive ignition attempts (five attempts total) before locking out.

The diagnostic fault code is 1 flash for a lockout due to failed ignition attempts or flame dropouts. The integrated control will automatically reset after one hour, or it can be reset by removing the thermostat signal or disconnecting the electrical power supply for over five seconds. If the diagnostic LED indicates an external lockout, perform the following checks:

- *Check the supply and manifold pressures*
- *Check the gas orifices for debris*
- *Check gas valve for proper operation*
- *Check secondary limit*

A dirty filter, excessive duct static, insufficient air flow, a faulty limit, or a failed circulator blower can cause this limit to open. Check filters, total external duct static, circulator blower motor, blower motor speed tap (see wiring diagram), and limit. An interruption in electrical power during a heating cycle may also cause the auxiliary limit to open. The automatic reset secondary limit is located on top of the circulator blower assembly.

- *Check rollout limit*

If the burner flames are not properly drawn into the heat exchanger, the flame rollout protection device will open. Possible causes are restricted or blocked flue passages, blocked or cracked heat exchanger, a failed induced draft blower, or insufficient combustion air. The rollout protection device is a manual reset limit located on the burner bracket. The cause of the flame rollout must be determined and corrected before resetting the limit.

- *Check flame sensor*

A drop in flame signal can be caused by nearly invisible coating on the sensor. Remove the sensor and carefully clean with steel wool.

- *Check wiring*
  Check wiring for opens/shorts and miswiring.

IMPORTANT: If you have to frequently reset your gas/electric package unit, it means that a problem exists that should be corrected. Contact a qualified servicer for further information.

Pressure Switch Stuck Open

A pressure switch stuck open can be caused by a faulty pressure switch, faulty wiring, a disconnected or damaged hose, a blocked or restricted flue, or a faulty induced draft blower.

If the control senses an open pressure switch during the pre-purge cycle, the induced draft blower only will be energized. If the pressure switch opens after ignition has begun the gas valve is de-energized, the circulator blower heat off cycle begins, and the induced draft blower remains on. The diagnostic fault code is two flashes.

Pressure Switch Stuck Closed

A stuck closed pressure switch can be caused by a faulty pressure switch or faulty wiring. If the control encounters a pressure switch stuck closed, the induced draft blower remains off. The diagnostic LED code for this fault is three (3) flashes.

Open Thermal Protection Device

If the primary limit switch opens, the gas valve is immediately de-energized, the induced draft and air circulating blowers are energized. The induced draft and air circulator blowers remain energized until the limit switch recloses. The diagnostic fault code for an open limit is four (4) flashes.

Primary Limit

A primary limit will open due to excessive supply air temperatures. This can be caused by a dirty filter, excessive duct static, insufficient air flow, or a faulty limit. Check filters, total external duct static, blower motor, blower motor speed tap (see wiring diagram), and limit. This limit will automatically reset once the temperature falls below a preset level.

Auxiliary/Secondary Limit

A dirty filter, excessive duct static, insufficient air flow, a faulty limit, or a failed circulator blower can cause this limit to open. Check filters, total external duct static, circulator blower motor, blower motor speed tap (see wiring diagram), and limit. An interruption in electrical power during a heating cycle may also cause the auxiliary limit to open. The automatic reset secondary limit is located on top of the circulator blower assembly.

Rollout Limit
If the burner flames are not properly drawn into the heat exchanger, the flame rollout protection device will open. Possible causes are restricted or blocked flue passages, blocked or cracked heat exchanger, a failed induced draft blower, or insufficient combustion air. The rollout protection device is a manual reset limit located on the burner bracket. The cause of the flame rollout must be determined and corrected before resetting the limit.

Flame Detected with Gas Valve Closed
If flame is detected with the gas valve de-energized, the combustion and air circulator blowers are energized. The diagnostic fault code is five (5) flashes for this condition. The control can be reset by removing the power supply to the unit or it will automatically reset after one hour. Miswiring is the probable cause for this fault.

Low Flame Signal (Two-Stage Models ONLY)
Under some conditions, the fuel or air supply can create a nearly invisible coating on the flame sensor. This coating acts as an insulator causing a drop in the flame signal. If the flame signal drops below a predetermined value, the ignition control will display an error code of (1) flash on the amber diagnostic LED. The unit will continue to operate until the control can no longer detect flame.

Abnormal Operation - Cooling

Short Cycle Compressor Delay
The automatic ignition control has a built-in feature that prevents damage to the compressor in short cycling situations. In the event of intermittent power losses or intermittent thermostat operation, the ignition control will delay output to the compressor contactor for three minutes from the time power is restored. (Compressor is off a total of three minutes). The diagnostic LED will flash six (6) times to indicate the compressor contactor output is being delayed.

NOTE: Some electronic thermostats also have a built-in compressor short cycle timer that may be longer than the three minute delay given above. If you are using an electronic thermostat and the compressor has not started after three minutes, wait an additional five minutes to allow the thermostat to complete its short cycle delay time.

High Pressure Switch/Low Pressure Switch
(5-Ton Models ONLY)
Some models include a high pressure cutout switch and/or a loss of charge cutout switch. The high pressure cutout switch protects the refrigeration system from excessive operating pressures. The loss of charge cutout switch protects the refrigeration system from very low operating pressures due to a loss of refrigerant. Compressor operation will be disabled if either of these devices opens. If either device opens, the diagnostic red LED will flash (9) times to indicate that a refrigeration system pressure switch is open.

Refrigerant Detection System

	warning; flammable materials
	service indicator; read technical manual
	operator's manual; operating instructions
	warning; low burning velocity material
	UN GHS flame symbol

LED STATUS	
MODE	LED FLASHING PATTERN
NORMAL OPERATION	SLOW LED FLASHING PATTERN (2 SECONDS ON 2 SECONDS OFF)
R-32 LEAK ALARM	FAST LED FLASHING PATTERN
DELAY MODE	LED WILL BE ON CONTINUOUSLY
SYSTEM VERIFICATION MODE	FAST LED FLASHING PATTERN
CONTROL BOARD INTERNAL FAULT	LED WILL FLASH 2 TIMES AND THEN BE OFF FOR 5 SECONDS
R32 SENSOR COMMUNICATION FAULT	LED WILL FLASH 3 TIMES AND THEN BE OFF FOR 5 SECONDS
R32 SENSOR FAULT	LED WILL FLASH 4 TIMES AND THEN BE OFF FOR 5 SECONDS

Servicing Measures for the Refrigerant Detection system:

Before servicing, identify the mode of operation of the system by reading the LED flashing pattern on the PCB within the control box and matching the LED flashing pattern with mode of operation in the A2L PCB fault code table on the wiring diagram which is attached on the back side of the control box panel.

REFRIGERANT SENSORS for REFRIGERANT DETECTION SYSTEMS shall only be replaced with sensors specified by the manufacturer. If REFRIGERANT SENSOR requires replacement, please replace with Sensata R32 Sensor PN#RGD-00ML12 (Daikin PN#SER2A08012).

For aluminum indoor coil cleaning , the A2L sensor must be removed from the unit before applying coil cleaners to avoid damage and contamination.

MAINTENANCE

WARNING

HIGH VOLTAGE
Disconnect all power before servicing or installing this unit. Multiple power sources may be present. Failure to do so may cause property damage, personal injury or death.

Have the gas heating section of the unit checked at least once a year before the heating season begins, to be sure that the combustion air inlet and flue outlet hoods are not blocked by debris, which would prevent adequate combustion air and a properly operating vent system.

Filter Replacement or Cleaning

A return air filter is not supplied with this unit; however, there must be a means of filtering all of the return air. The filter(s) may be located in the return air duct(s), or return air filter grille(s). Consult with your installing dealer for the actual location of the return air filter(s) for your unit.

Dirty filters are the most common cause of inadequate heating or cooling performance. Filter inspection should be made at least every two months; more often if necessary because of local conditions and usage.

Dirty throwaway filters should be discarded and replaced with a new, clean filter. Dirty permanent filters should be washed with water, thoroughly dried and sprayed with a filter adhesive before being reinstalled. (Filter adhesives may be found at many hardware stores.) Permanent filters should last several years. However, should one become torn or uncleanable, it should be replaced.

Cabinet Finish Maintenance

Use a fine grade automotive wax on the cabinet finish to maintain the finishes original high luster. This is especially important in installations with extended periods of direct sunlight.

Clean Outside Coil (Qualified Servicer Only)

The coil with the outside air flowing over it should be inspected annually and cleaned as frequently as necessary to keep the finned areas free of lint, hair and debris.

Condenser, Evaporator, and Induced Draft Motors

Bearings on the air circulating blower motor, condenser motor and the combustion fan motor are permanently lubricated. No additional oiling is required.

Flame Sensor (Qualified Servicer Only)

A drop in the flame current can be caused by a nearly invisible coating on the flame sensor. This coating, created by the fuel or combustion air supply, can be removed by carefully cleaning the flame sensor with steel wool. **NOTE:** After cleaning, the microamp signal should be stable and in the range of 4 - 6 microamps DC.

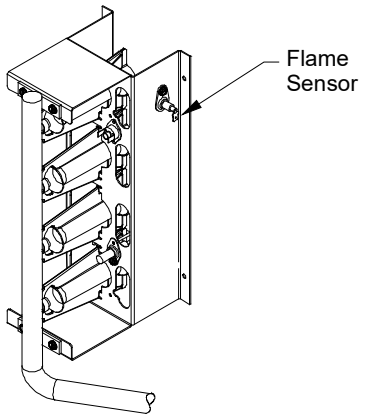

Flame Sensor

Flue Passages (Qualified Servicer Only)

At the start of each heating season, inspect and, if necessary, clean the unit flue passage.

Cleaning Flue Passages (Qualified Servicer Only)

1. Shut off electric power and gas supply to the unit.
2. Remove burner assembly by disconnecting the gas line and removing the manifold bracket from the partition panel.

3. Remove the flue from the induced draft blower and the collector box cover from the partition panel.
4. The primary heat exchanger tubes can be cleaned using a round wire brush attached to a length of high grade stainless steel cable, such as drain cleanout cable. Attach a variable speed reversible drill to the other end of the spring cable. Slowly rotate the cable with the drill and insert it into one of the primary heat exchanger tubes. While reversing the drill, work the cable in and out several times to obtain sufficient cleaning. Use a large cable for the large tube, and then repeat the operation with a small cable for the smaller tube. Repeat for each tube.
5. When all heat exchanger tubes have been cleaned, replace the parts in the reverse order in which they were removed.
6. To reduce the chances of repeated fouling of the heat exchanger, perform the steps listed in “Startup, Adjustments, and Checks”.

Main Burner Flame (Qualified Servicer Only)

Flames should be stable, soft and blue (dust may cause orange tips but must not be yellow). The flames must extend directly outward from the burner without curling, floating or lifting off.

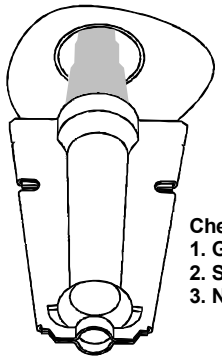

Check the burner flames for:
1. Good adjustment
2. Stable, soft and blue
3. Not curling, floating, or lifting off.

Burner Flame

WARNING

To avoid personal injury or death due to electrical shock, do not remove any internal compartment covers or attempt any adjustment. Contact a qualified servicer at once if an abnormal flame should develop.

At least once a year, prior to or during the heating season, make a visual check of the burner flames.

NOTE: This will involve removing and reinstalling the heat exchanger door on the unit, which is held by two screws. If you are uncertain about your ability to do this, contact a qualified servicer.

If a strong wind is blowing, it may alter the airflow pattern within the unit enough that an inspection of the burner flames is not possible.

Cleaning Burners

1. Shut off electric power and gas supply to the unit.
2. Remove the screws securing the manifold to the burner retention bracket. Remove the manifold and rotate each burner counterclockwise to remove.

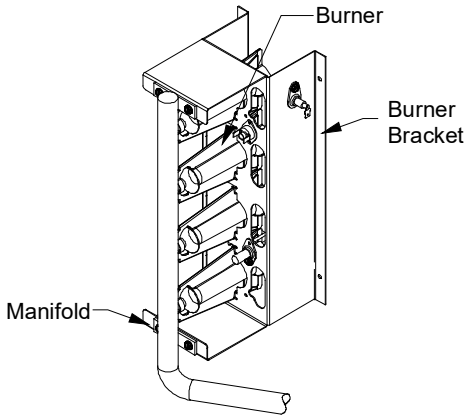

Manifold Assembly

3. Remove the burners.
4. Use a bottle brush to clean burner insert and inside of the burners.
5. Replace burners and manifold, inspect the burner assembly for proper seating of burners in retention slots.
6. Reconnect electrical power and gas supply.

CAUTION

Label all wires prior to disconnection when servicing controls. Wiring errors can cause improper and dangerous operation.

CAUTION

Always verify proper operation after servicing.

For further information on the yearly inspection, consult the User Manual. It is recommended that a qualified servicer inspect and service the unit at least once each year.

Turn the unit on at the thermostat. Wait a few minutes, since any dislodged dust will alter the normal flame appearance. Flames should be predominantly blue and directed into the tubes. They should not be yellow. They should extend directly outward from the burner ports without curling downward, floating or lifting off the ports.

ACCESSORIES AND FUNCTIONAL PARTS

Sheet Metal Accessories

Additional accessories can be purchased to fit specific application needs. Parts and instructions are available from your distributor.

Functional Parts

Auxiliary Limit Switch	Flame Roll-out Switch
Blower Housing	Flame Sensor
Circulator Blower Motor	Gas Orifice
Blower Wheel	Gas Valve
Burner	Heat Exchanger
Capacitor	High Limit Switch
Compressor	Igniter
Condenser Coil	Ignition Control
Condenser Fan Blade	Induced Draft Blower
Condenser Fan Motor	Pressure Switch
Contactor	Pressure Switch Hose
Gas Manifold	Thermostatic Expansion Valve
Evaporator Coil	Transformer

Functional Parts List

General Information

1. Refer to the description in Functional Parts List when ordering any of the listed functional parts. Be sure to provide the unit model and serial numbers with the order.
2. Although only functional parts are shown, all sheet metal parts, doors, etc. may be ordered by description.
3. Parts are available from your distributor.

BLOWER PERFORMANCE DATA

A/GPGM32404031 - Rise Range: 25°-55°													
CURRENT E.S.P.	T1 HEATING SPEED			T2 HEATING SPEED			T3 HEATING SPEED			T4 COOLING SPEED		T5 HIGH STATIC COOLING SPEED	
	CFM	WATTS	RISE	CFM	WATTS	RISE	CFM	WATTS	RISE	CFM	WATTS	CFM	WATTS
0.1	695	62	44	820	93	37	1050	167	29	995	144	1119	208
0.2	650	71	47	785	100	39	1010	180	30	948	152	1110	216
0.3	605	77	51	745	108	41	970	186	32	903	159	1083	222
0.4	565	89	54	700	117	44	935	192	33	860	166	1052	229
0.5	480	99	X	665	127	46	890	203	35	813	174	1017	237
0.6	415	106	X	575	138	53	850	208	36	763	181	979	243
0.7	365	110	X	510	146	X	815	216	38	706	188	934	250
0.8	320	119	X	455	155	X	755	222	41	651	195	879	259

A/GPGM32406031 - Rise Range: 30°-60°													
CURRENT E.S.P.	T1 HEATING SPEED			T2 HEATING SPEED			T3 HEATING SPEED			T4 COOLING SPEED		T5 HIGH STATIC COOLING SPEED	
	CFM	WATTS	RISE	CFM	WATTS	RISE	CFM	WATTS	RISE	CFM	WATTS	CFM	WATTS
0.1	695	62	X	820	93	56	1050	167	44	995	144	1119	208
0.2	650	71	X	785	100	59	1010	180	46	948	152	1110	216
0.3	605	77	X	745	108	X	970	186	48	903	159	1083	222
0.4	565	89	X	700	117	X	935	192	49	860	166	1052	229
0.5	480	99	X	665	127	X	890	203	52	813	174	1017	237
0.6	415	106	X	575	138	X	850	208	54	763	181	979	243
0.7	365	110	X	510	146	X	815	216	57	706	188	934	250
0.8	320	119	X	455	155	X	755	222	X	651	195	879	259

A/GPGM33004031 - Rise Range: 25°-55°													
CURRENT E.S.P.	T1 HEATING SPEED			T2 HEATING SPEED			T3 HEATING SPEED			T4 COOLING SPEED		T5 HIGH STATIC COOLING SPEED	
	CFM	WATTS	RISE	CFM	WATTS	RISE	CFM	WATTS	RISE	CFM	WATTS	CFM	WATTS
0.1	680	61	45	840	103	37	1035	174	30	1184	223	1225	276
0.2	640	72	48	795	109	39	995	184	31	1141	233	1185	275
0.3	605	80	51	750	117	41	960	192	32	1102	241	1150	289
0.4	555	89	X	710	126	43	925	205	33	1061	249	1115	296
0.5	490	93	X	660	132	47	875	200	35	1023	256	1085	303
0.6	455	107	X	615	138	50	840	217	37	982	264	1045	312
0.7	395	109	X	570	150	54	795	222	39	942	272	1000	315
0.8	350	119	X	515	157	X	755	226	41	897	279	960	320

A/GPGM33006031 - Rise Range: 30°-60°													
CURRENT E.S.P.	T1 HEATING SPEED			T2 HEATING SPEED			T3 HEATING SPEED			T4 COOLING SPEED		T5 HIGH STATIC COOLING SPEED	
	CFM	WATTS	RISE	CFM	WATTS	RISE	CFM	WATTS	RISE	CFM	WATTS	CFM	WATTS
0.1	680	61	X	840	103	55	1035	174	45	1184	223	1225	276
0.2	640	72	X	795	109	58	995	184	46	1141	233	1185	275
0.3	605	80	X	750	117	X	960	192	48	1102	241	1150	289
0.4	555	89	X	710	126	X	925	205	50	1061	249	1115	296
0.5	490	93	X	660	132	X	875	200	53	1023	256	1085	303
0.6	455	107	X	615	138	X	840	217	55	982	264	1045	312
0.7	395	109	X	570	150	X	795	222	58	942	272	1000	315
0.8	350	119	X	515	157	X	755	226	X	897	279	960	320

X = Heating Temperature Rise Not Recommended

BLOWER PERFORMANCE DATA

A/GPGM33604031 - Rise Range: 25°-55°													
CURRENT E.S.P.	T1 HEATING SPEED			T2 HEATING SPEED			T3 HEATING SPEED			T4 COOLING SPEED		T5 HIGH STATIC COOLING SPEED	
	CFM	WATTS	RISE	CFM	WATTS	RISE	CFM	WATTS	RISE	CFM	WATTS	CFM	WATTS
0.1	745	76	41	1115	206	28	1265	285	X	1367	324	1440	426
0.2	690	84	45	1075	215	29	1230	290	X	1324	333	1390	428
0.3	635	91	48	1030	221	30	1175	300	26	1279	341	1365	440
0.4	570	98	54	985	233	31	1140	303	27	1233	349	1335	440
0.5	505	107	X	940	234	33	1100	311	28	1182	357	1295	456
0.6	450	115	X	895	242	34	1055	319	29	1127	366	1255	456
0.7	395	118	X	845	248	36	1010	326	30	1074	373	1220	465
0.8	345	126	X	785	252	39	960	335	32	1024	381	1180	468

A/GPGM33606031 - Rise Range: 30°-60°													
CURRENT E.S.P.	T1 HEATING SPEED			T2 HEATING SPEED			T3 HEATING SPEED			T4 COOLING SPEED		T5 HIGH STATIC COOLING SPEED	
	CFM	WATTS	RISE	CFM	WATTS	RISE	CFM	WATTS	RISE	CFM	WATTS	CFM	WATTS
0.1	745	76	X	1115	206	41	1265	285	36	1367	324	1440	426
0.2	690	84	X	1075	215	43	1230	290	37	1324	333	1390	428
0.3	635	91	X	1030	221	45	1175	300	39	1279	341	1365	440
0.4	570	98	X	985	233	47	1140	303	40	1233	349	1335	440
0.5	505	107	X	940	234	49	1100	311	42	1182	357	1295	456
0.6	450	115	X	895	242	52	1055	319	44	1127	366	1255	456
0.7	395	118	X	845	248	55	1010	326	46	1074	373	1220	465
0.8	345	126	X	785	252	59	960	335	48	1024	381	1180	468

A/GPGM336080M31 - Rise Range: 30°-60°													
CURRENT E.S.P.	T1 HEATING SPEED			T2 HEATING SPEED			T3 HEATING SPEED			T4 COOLING SPEED		T5 HIGH STATIC COOLING SPEED	
	CFM	WATTS	RISE	CFM	WATTS	RISE	CFM	WATTS	RISE	CFM	WATTS	CFM	WATTS
0.1	745	76	X	1115	206	55	1265	285	49	1367	324	1440	426
0.2	690	84	X	1075	215	57	1230	290	50	1324	333	1390	428
0.3	635	91	X	1030	221	60	1175	300	52	1279	341	1365	440
0.4	570	98	X	985	233	X	1140	303	54	1233	349	1335	440
0.5	505	107	X	940	234	X	1100	311	56	1182	357	1295	456
0.6	450	115	X	895	242	X	1055	319	58	1127	366	1255	456
0.7	395	118	X	845	248	X	1010	326	X	1074	373	1220	465
0.8	345	126	X	785	252	X	960	335	X	1024	381	1180	468

A/GPGM34206031 - Rise Range: 30°-60°													
CURRENT E.S.P.	T1 HEATING SPEED			T2 HEATING SPEED			T3 HEATING SPEED			T4 COOLING SPEED		T5 HIGH STATIC COOLING SPEED	
	CFM	WATTS	RISE	CFM	WATTS	RISE	CFM	WATTS	RISE	CFM	WATTS	CFM	WATTS
0.1	1055	156	44	1380	298	33	1415	327	33	1545	405	1637	444
0.2	1000	166	46	1320	312	35	1360	335	34	1483	415	1593	454
0.3	940	173	49	1270	318	36	1305	343	35	1430	424	1541	459
0.4	880	181	52	1220	327	38	1260	353	37	1381	435	1497	473
0.5	825	189	56	1160	336	40	1200	359	38	1323	443	1450	478
0.6	760	204	X	1115	342	41	1150	371	40	1272	453	1407	485
0.7	705	207	X	1060	347	44	1110	375	42	1213	462	1357	493
0.8	625	210	X	1000	361	46	1060	381	44	1144	469	1304	502

A/GPGM34208031 - Rise Range: 30°-60°													
CURRENT E.S.P.	T1 HEATING SPEED			T2 HEATING SPEED			T3 HEATING SPEED			T4 COOLING SPEED		T5 HIGH STATIC COOLING SPEED	
	CFM	WATTS	RISE	CFM	WATTS	RISE	CFM	WATTS	RISE	CFM	WATTS	CFM	WATTS
0.1	1055	156	58	1380	298	45	1415	327	43	1545	405	1637	444
0.2	1000	166	X	1320	312	47	1360	335	45	1483	415	1593	454
0.3	940	173	X	1270	318	48	1305	343	47	1430	424	1541	459
0.4	880	181	X	1220	327	50	1260	353	49	1381	435	1497	473
0.5	825	189	X	1160	336	53	1200	359	51	1323	443	1450	478
0.6	760	204	X	1115	342	55	1150	371	53	1272	453	1407	485
0.7	705	207	X	1060	347	58	1110	375	55	1213	462	1357	493
0.8	625	210	X	1000	361	X	1060	381	58	1144	469	1304	502

X = Heating Temperature Rise Not Recommended

BLOWER PERFORMANCE DATA

A/GPGM34806031 - Rise Range: 30°-60°													
CURRENT E.S.P.	T1 HEATING SPEED			T2 HEATING SPEED			T3 HEATING SPEED			T4 COOLING SPEED		T5 HIGH STATIC COOLING SPEED	
	CFM	WATTS	RISE	CFM	WATTS	RISE	CFM	WATTS	RISE	CFM	WATTS	CFM	WATTS
0.1	1055	156	44	1380	298	33	1415	327	33	1769	651	1780	647
0.2	1000	166	46	1320	312	35	1360	335	34	1726	664	1740	658
0.3	940	173	49	1270	318	36	1305	343	35	1683	672	1695	661
0.4	880	181	52	1220	327	38	1260	353	37	1637	678	1640	679
0.5	825	189	56	1160	336	40	1200	359	38	1590	684	1595	675
0.6	760	204	X	1115	342	41	1150	371	40	1545	689	1550	693
0.7	705	207	X	1060	347	44	1110	375	42	1499	695	1505	690
0.8	625	210	X	1000	361	46	1060	381	44	1454	701	1465	696

A/GPGM34808031 - Rise Range: 30°-60°													
CURRENT E.S.P.	T1 HEATING SPEED			T2 HEATING SPEED			T3 HEATING SPEED			T4 COOLING SPEED		T5 HIGH STATIC COOLING SPEED	
	CFM	WATTS	RISE	CFM	WATTS	RISE	CFM	WATTS	RISE	CFM	WATTS	CFM	WATTS
0.1	1055	156	58	1380	298	45	1415	327	43	1769	651	1780	647
0.2	1000	166	X	1320	312	47	1360	335	45	1726	664	1740	658
0.3	940	173	X	1270	318	48	1305	343	47	1683	672	1695	661
0.4	880	181	X	1220	327	50	1260	353	49	1637	678	1640	679
0.5	825	189	X	1160	336	53	1200	359	51	1590	684	1595	675
0.6	760	204	X	1115	342	55	1150	371	53	1545	689	1550	693
0.7	705	207	X	1060	347	58	1110	375	55	1499	695	1505	690
0.8	625	210	X	1000	361	X	1060	381	58	1454	701	1465	696

A/GPGM34810031 - Rise Range: 35°-65°													
CURRENT E.S.P.	T1 HEATING SPEED			T2 HEATING SPEED			T3 HEATING SPEED			T4 COOLING SPEED		T5 HIGH STATIC COOLING SPEED	
	CFM	WATTS	RISE	CFM	WATTS	RISE	CFM	WATTS	RISE	CFM	WATTS	CFM	WATTS
0.1	1055	156	X	1380	298	56	1570	327	49	1769	651	1780	647
0.2	1000	166	X	1320	312	58	1520	335	51	1726	664	1740	658
0.3	940	173	X	1270	318	61	1480	343	52	1683	672	1695	661
0.4	880	181	X	1220	327	63	1425	353	54	1637	678	1640	679
0.5	825	189	X	1160	336	X	1380	359	56	1590	684	1595	675
0.6	760	204	X	1115	342	X	1335	371	58	1545	689	1550	693
0.7	705	207	X	1060	347	X	1285	375	60	1499	695	1505	690
0.8	625	210	X	1000	361	X	1235	381	62	1454	701	1465	696

X = Heating Temperature Rise Not Recommended

BLOWER PERFORMANCE DATA

A/GPGM36008031 - Rise Range: 35°-65°												
CURRENT E.S.P.	T1 LOW STAGE HEATING SPEED			T2 HIGH STAGE HEATING SPEED			T3 LOW STAGE COOLING SPEED		T4 HIGH STAGE COOLING SPEED		T5 HIGH STATIC COOLING SPEED	
	CFM	WATTS	RISE	CFM	WATTS	RISE	CFM	WATTS	CFM	WATTS	CFM	WATTS
0.1	1285	252	36	1370	297	45	1416	294	2047	779	2107	831
0.2	1235	259	37	1330	304	46	1354	303	1992	786	2060	837
0.3	1180	272	39	1280	314	48	1299	312	1938	793	2015	850
0.4	1130	272	41	1220	321	50	1248	323	1893	799	1972	8558
0.5	1085	280	42	1180	341	52	1198	335	1848	807	1930	864
0.6	1035	294	45	1135	339	54	1146	345	1801	815	1888	875
0.7	975	297	47	1085	347	57	1076	353	1758	823	1850	885
0.8	910	319	51	1035	359	59	1021	363	1700	828	1805	889

A/GPGM36010031 - Rise Range: 35°-65°												
CURRENT E.S.P.	T1 LOW STAGE HEATING SPEED			T2 HIGH STAGE HEATING SPEED			T3 LOW STAGE COOLING SPEED		T4 HIGH STAGE COOLING SPEED		T5 HIGH STATIC COOLING SPEED	
	CFM	WATTS	RISE	CFM	WATTS	RISE	CFM	WATTS	CFM	WATTS	CFM	WATTS
0.1	1175	169	49	1659	513	45	1416	294	2047	779	2107	831
0.2	1115	178	52	1610	518	47	1354	303	1992	786	2060	837
0.3	1045	183	55	1580	535	47	1299	312	1938	793	2015	850
0.4	985	194	59	1543	543	49	1248	323	1893	799	1972	8558
0.5	905	199	64	1503	554	50	1198	335	1848	807	1930	864
0.6	840	215	X	1456	556	52	1146	345	1801	815	1888	875
0.7	770	218	X	1418	566	53	1076	353	1758	823	1850	885
0.8	700	229	X	1374	570	55	1021	363	1700	828	1805	889

A/GPGM36012031 - Rise Range: 35°-65°												
CURRENT E.S.P.	T1 LOW STAGE HEATING SPEED			T2 HIGH STAGE HEATING SPEED			T3 LOW STAGE COOLING SPEED		T4 HIGH STAGE COOLING SPEED		T5 HIGH STATIC COOLING SPEED	
	CFM	WATTS	RISE	CFM	WATTS	RISE	CFM	WATTS	CFM	WATTS	CFM	WATTS
0.1	1260	252	54	1928	774	47	1416	294	2047	779	2107	831
0.2	1206	261	56	1881	782	48	1354	303	1992	786	2060	837
0.3	1154	266	58	1883	788	49	1299	312	1938	793	2015	850
0.4	1108	277	61	1791	797	50	1248	323	1893	799	1972	8558
0.5	1057	286	64	1745	802	52	1198	335	1848	807	1930	864
0.6	1006	294	X	1706	810	53	1146	345	1801	815	1888	875
0.7	960	303	X	1665	816	54	1076	353	1758	823	1850	885
0.8	917	313	X	1627	823	55	1021	363	1700	828	1805	889

X = Heating Temperature Rise Not Recommended

IGNITION CONTROL DIAGNOSTIC INDICATOR CHART (SINGLE STAGE MODELS ONLY)

Red Light Signal	Refer to Abnormal Heating or Cooling Operation Sections of this Manual
Off	Internal Control Failure
1 Flash	External Lockout
2 Flashes	Pressure Switch Stuck Open
3 Flashes	Pressure Switch Stuck Closed
4 Flashes	Thermal Protection Device Open
5 Flashes	Flame Detected with Gas Valve Closed
6 Flashes	Short Cycle Compressor Delay (Cooling Only)

HEATING TIMING CHART

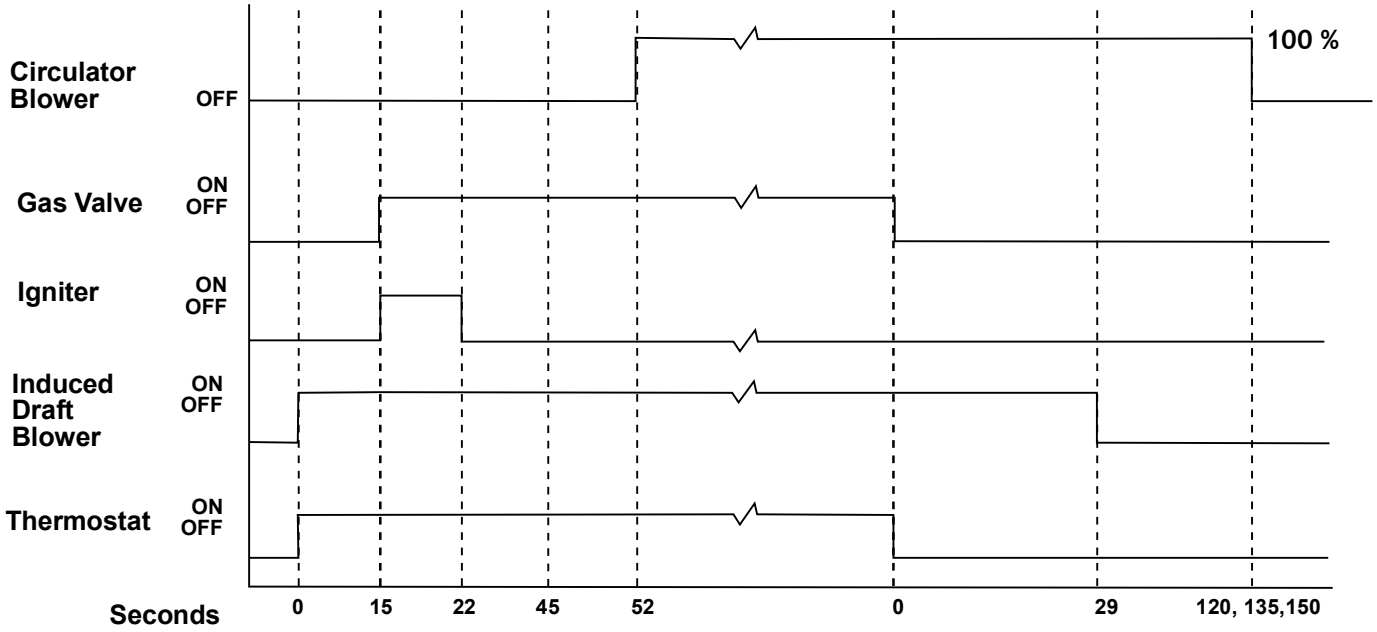

COOLING TIMING CHART

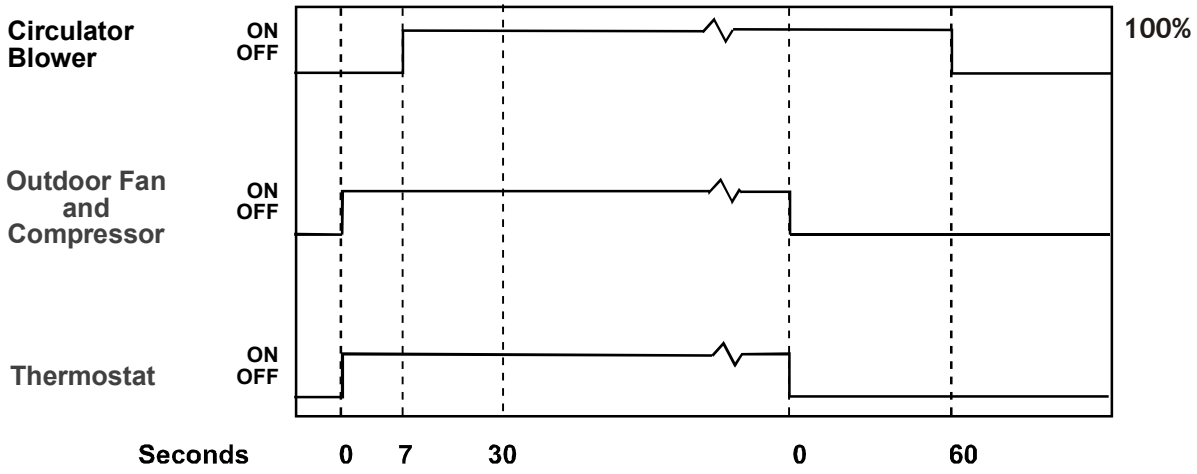

IGNITION CONTROL DIAGNOSTIC INDICATOR CHART (TWO-STAGE MODELS ONLY)

Red Light Signal	Refer to Abnormal Heating or Cooling Operation Sections of this Manual
Off	Internal Control Failure
1 Flash	External Lockout
2 Flashes	Pressure Switch Stuck Open
3 Flashes	Pressure Switch Stuck Closed
4 Flashes	Thermal Protection Device Open
5 Flashes	Flame Detected with Gas Valve Closed
6 Flashes	Short Cycle Compressor Delay (Cooling Only)
7 Flashes	Limit Opened Five (5) Times Within The Same Call For Heat
8 Flashes	Indoor/Outdoor Thermostat Open (Cooling Only; Devices Not present On All Models)
9 Flashes	High Pressure/Loss of Charge Switch Open (Cooling Only; Devices Not Present On All Models)

Amber Light Signal	Refer to Abnormal Heating or Cooling Operation Sections of this Manual
Off	No Flame Present
On	Normal Flame
1 Flash	Low Flame Current
2 Flashes	Flame Detected with Gas Valve De-energized.

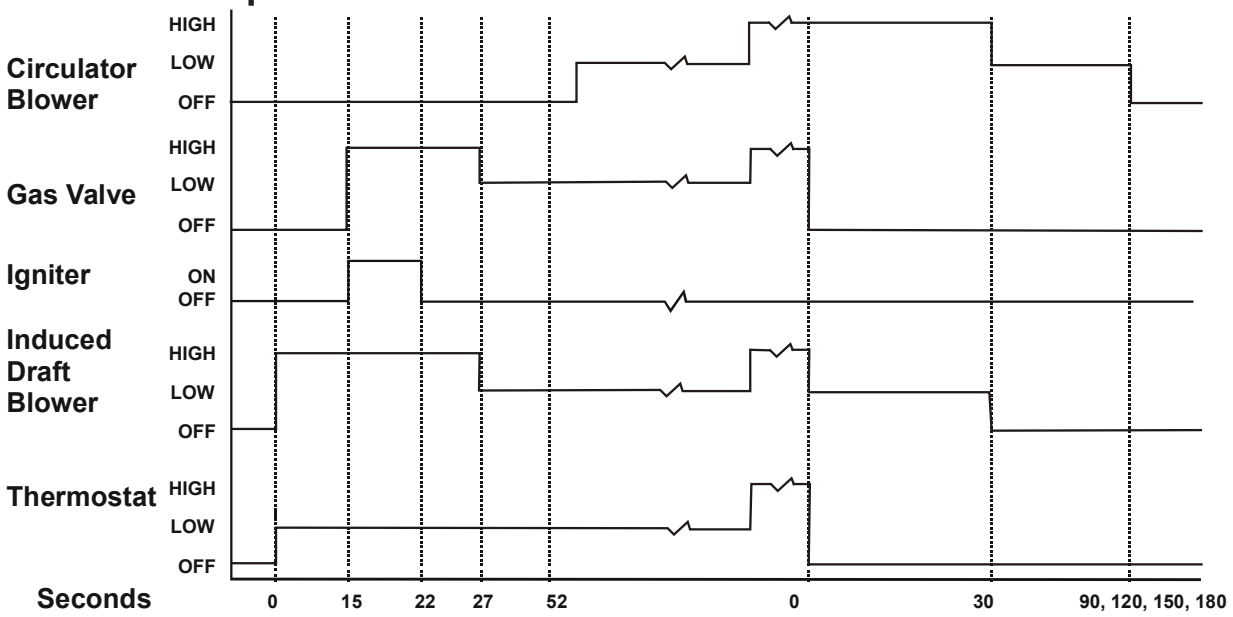

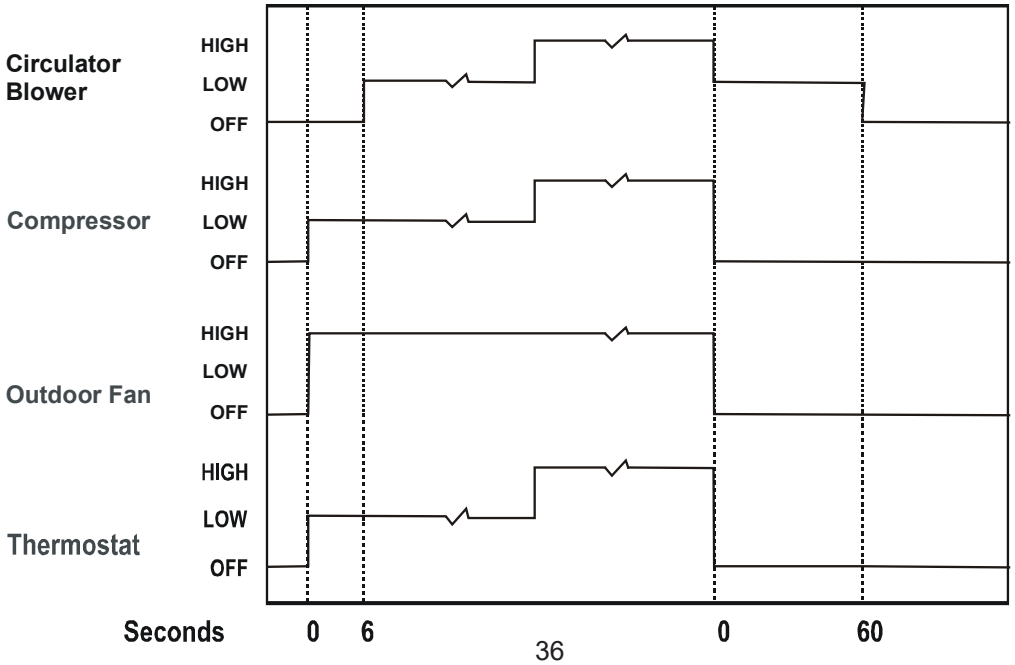

APPENDIX
UNIT DIMENSIONS

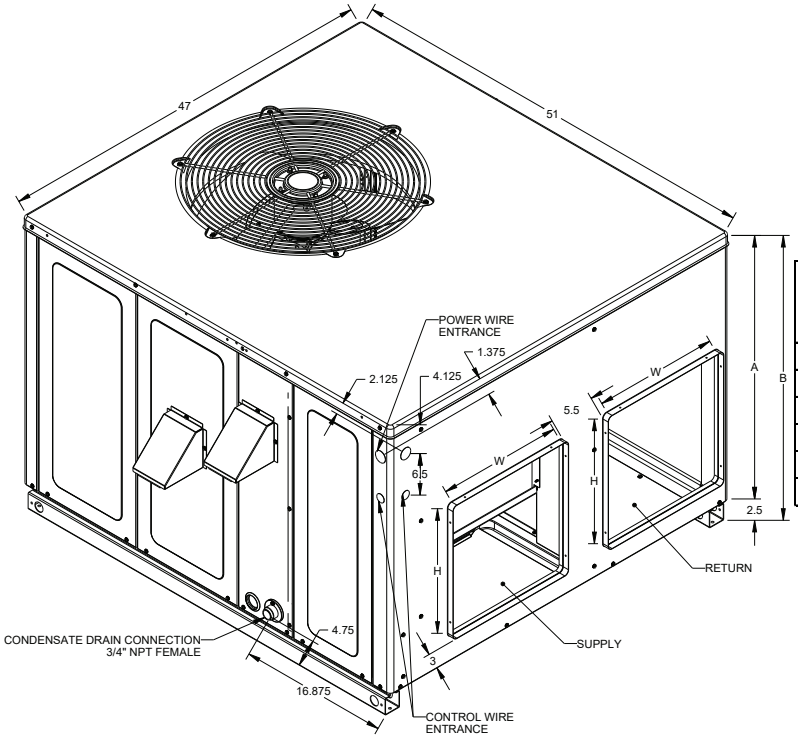

Model	Unit Dimensions (Inches)				Chasis Size
			Height		
	w	d	a	b	
A/GPGM324***31	47	51	32	34 1/2	Medium
A/GPGM330***31	47	51	32	34 1/2	Medium
A/GPGM336***31	47	51	32	34 1/2	Medium
A/GPGM342***31	47	51	40	43 1/2	Large
A/GPGM348***31	47	51	40	43 1/2	Large
A/GPGM360***31	47	51	40	43 1/2	Large

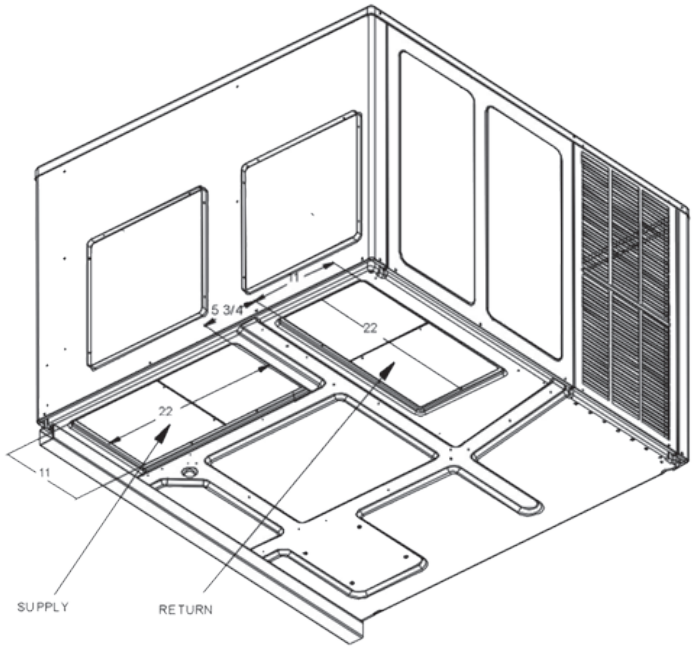

Model	Duct Openings			
	Supply		Return	
	W	H	W	H
A/GPGM324***31	16	16	16	16
A/GPGM330***31	16	16	16	16
A/GPGM336***31	16	16	16	16
A/GPGM342***31	16	18	16	18
A/GPGM348***31	16	18	16	18
A/GPGM360***31	16	18	16	18

A/GPGM3 [24/30/36] ***31 WIRING DIAGRAM

WARNING

HIGH VOLTAGE!
DISCONNECT ALL POWER BEFORE SERVICING OR INSTALLING THIS UNIT. MULTIPLE POWER SOURCES MAY BE PRESENT. FAILURE TO DO SO MAY CAUSE PROPERTY DAMAGE, PERSONAL INJURY OR DEATH.

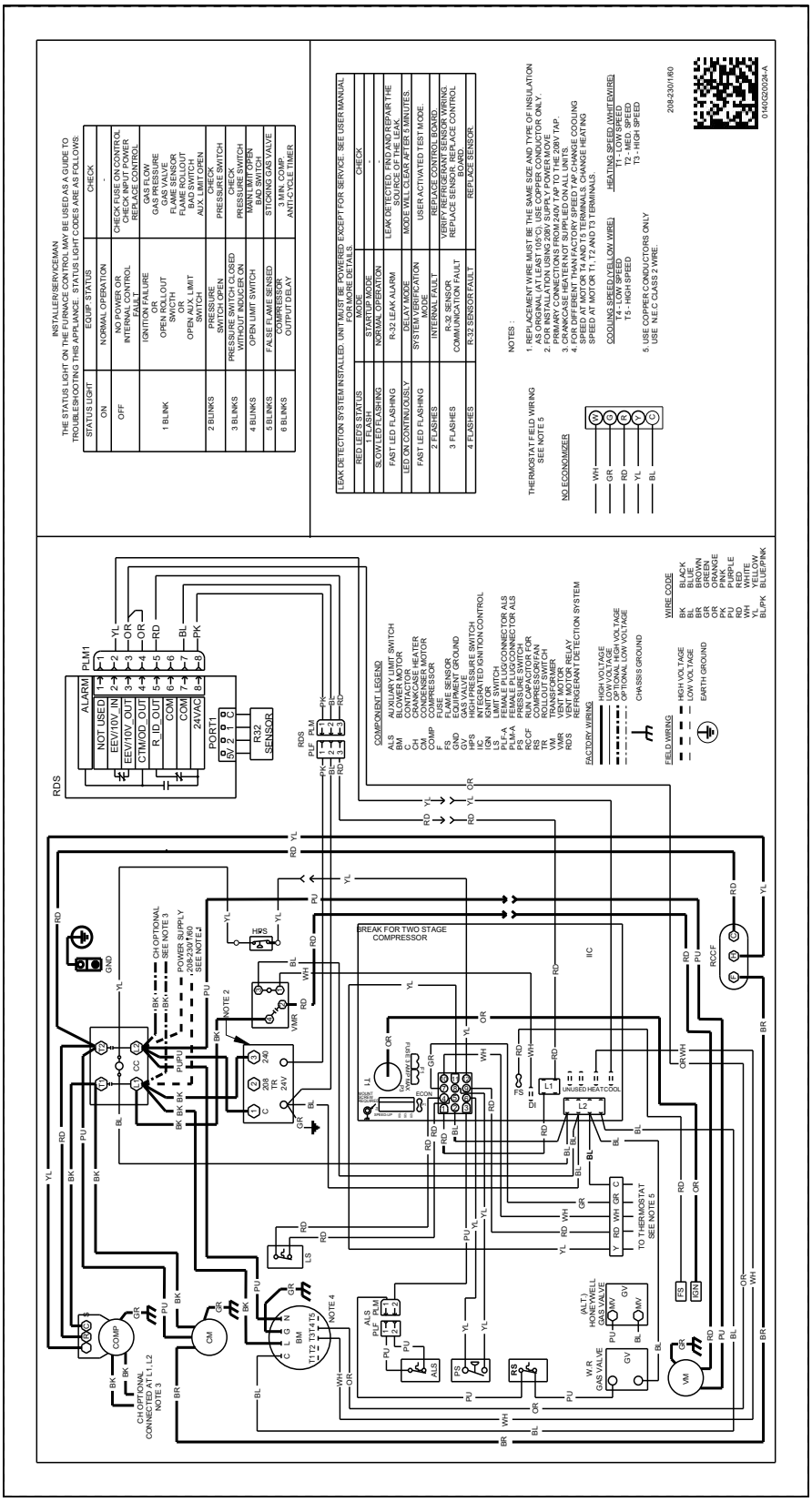

Wiring is subject to change. Always refer to the wiring diagram on the unit for the most up-to-date wiring.

A/GPGM3[42/48]***31 WIRING DIAGRAM

WARNING

HIGH VOLTAGE!
DISCONNECT ALL POWER BEFORE SERVICING OR INSTALLING THIS UNIT. MULTIPLE POWER SOURCES MAY BE PRESENT. FAILURE TO DO SO MAY CAUSE PROPERTY DAMAGE, PERSONAL INJURY OR DEATH.

INSTALLER/SERVICEMAN:
THE STATUS LIGHT ON THE FURNACE CONTROL MAY BE USED AS A GUIDE TO TROUBLESHOOTING THIS APPLIANCE. STATUS LIGHT CODES ARE AS FOLLOWS:

STATUS LIGHT	EQUIP. STATUS	CHECK
ON	NORMAL OPERATION	-
OFF	NO POWER OR INTERNAL CONTROL FAULT	CHECK INPUT POWER CHECK FUSE ON CONTROL REPLACE CONTROL
1 BLINK	IGNITION FAILURE OR OPEN ROLLOUT SWITCH OR OPEN AUX. LIMIT SWITCH	GAS FLOW GAS PRESSURE GAS VALVE FLAME SENSOR FLAME ROLLOUT BAD SWITCH AUX. LIMIT OPEN
2 BLINKS	PRESSURE SWITCH OPEN	CHECK PRESSURE SWITCH
3 BLINKS	PRESSURE SWITCH CLOSED WITHOUT INDUCER ON	CHECK PRESSURE SWITCH
4 BLINKS	OPEN LIMIT SWITCH	MAIN LIMIT OPEN BAD SWITCH
5 BLINKS	FALSE FLAME SENSED	STICKING GAS VALVE
6 BLINKS	COMPRESSOR OUTPUT DELAY	3 MIN. COMP. ANTI-CYCLE TIMER

LEAK DETECTION SYSTEM INSTALLED. UNIT MUST BE POWERED EXCEPT FOR SERVICE. SEE USER MANUAL FOR MORE DETAILS.

RED LED'S STATUS	MODE	CHECK
1 FLASH	STARTUP MODE	-
SLOW LED FLASHING	NORMAL OPERATION	-
FAST LED FLASHING	R-32 LEAK ALARM	LEAK DETECTED. FIND AND REPAIR THE SOURCE OF THE LEAK.
LED ON CONTINUOUSLY	DELAY MODE	MODE WILL CLEAR AFTER 5 MINUTES.
FAST LED FLASHING	SYSTEM VERIFICATION MODE	USER ACTIVATED TEST MODE.
2 FLASHES	INTERNAL FAULT	REPLACE CONTROL BOARD.
3 FLASHES	R-32 SENSOR COMMUNICATION FAULT	VERIFY REFRIGERANT SENSOR WIRING. REPLACE SENSOR. REPLACE CONTROL BOARD.
4 FLASHES	R-32 SENSOR FAULT	REPLACE SENSOR.

NOTES:
1. REPLACEMENT WIRE MUST BE THE SAME SIZE AND TYPE OF INSULATION AS ORIGINAL (USE COPPER CONDUCTOR ONLY).
2. FOR 208 VOLT TRANSFORMER OPERATION MOVE BLACK WIRE FROM TERMINAL (R) TO TERMINAL (2) ON TRANSFORMER.
3. CRANKCASE HEATER NOT SUPPLIED ON ALL UNITS.
4. CONNECT CM TO THE HIGH VOLTAGE SPEED TO CHANGE COOLING SPEED AT MOTOR T4 AND T5 TERMINALS. CHANGE HEATING SPEED AT MOTOR T1, T2 AND T3 TERMINALS.
5. USE COPPER CONDUCTORS ONLY.
6. "N" ONLY DESIGNATES A CONNECTION POINT AND IS NOT A "NEUTRAL".

THERMOSTAT FIELD WIRING

NO ECONOMIZER

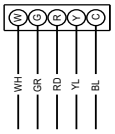

COOLING SPEED (YELLOW WIRE)
T4 - LOW SPEED
T5 - HIGH SPEED

HEATING SPEED (WHITE WIRE)
T1 - LOW SPEED
T2 - MED. SPEED
T3 - HIGH SPEED

USE NEC CLASS 2 WIRE.

208-230/1/60

0140G20060-A

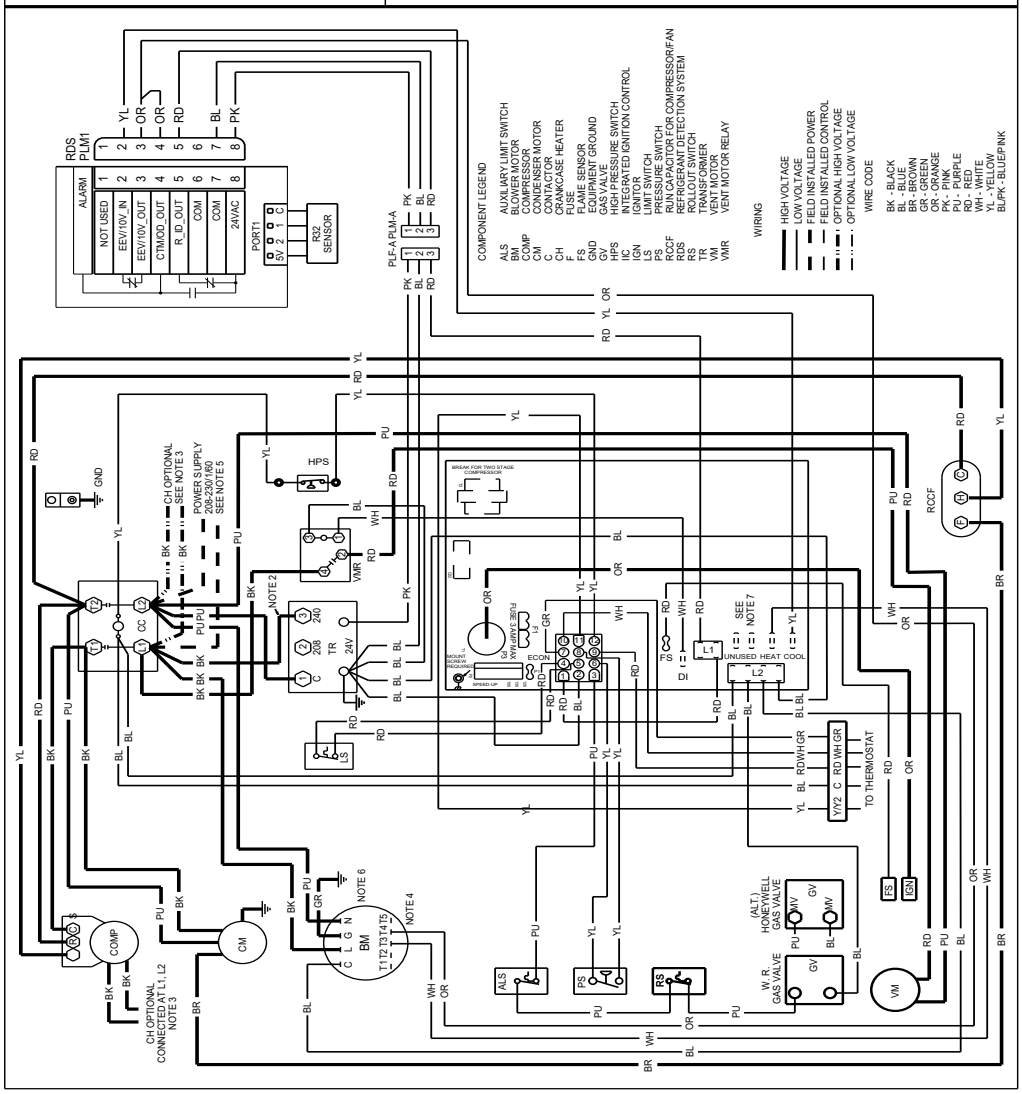

Wiring is subject to change. Always refer to the wiring diagram on the unit for the most up-to-date wiring.

A/GPGM360***31 WIRING DIAGRAM

WARNING

HIGH VOLTAGE!
DISCONNECT ALL POWER BEFORE SERVICING OR INSTALLING THIS UNIT. MULTIPLE POWER SOURCES MAY BE PRESENT. FAILURE TO DO SO MAY CAUSE PROPERTY DAMAGE, PERSONAL INJURY OR DEATH.

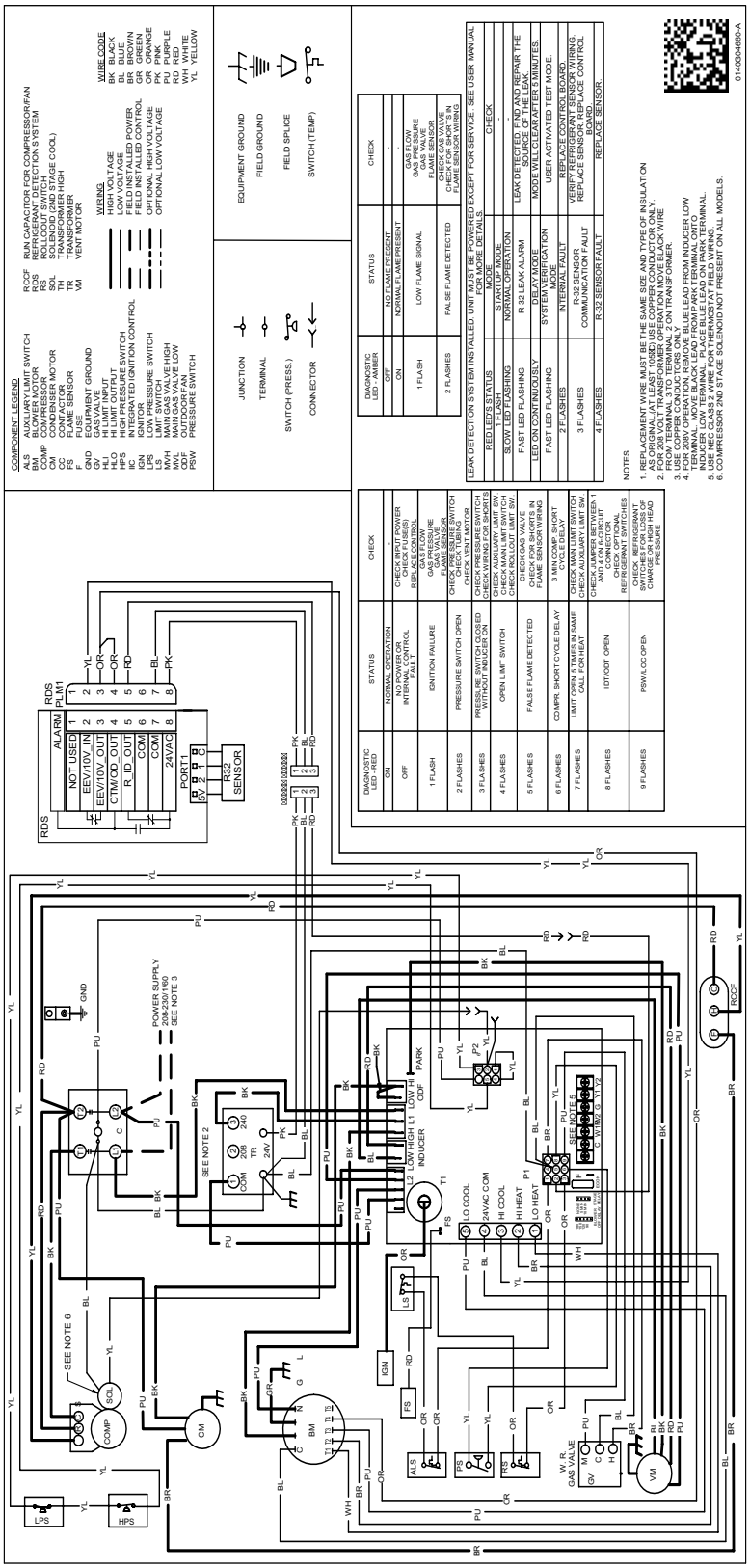

Wiring is subject to change. Always refer to the wiring diagram on the unit for the most up-to-date wiring.

PACKAGE UNITS - DUAL FUEL & GAS
HOMEOWNER'S ROUTINE MAINTENANCE RECOMMENDATIONS

*We strongly recommend a bi-annual maintenance checkup be performed by a **qualified service agency** before the heating and cooling seasons begin.*

WARNING

HIGH VOLTAGE
DISCONNECT ALL POWER BEFORE SERVICING OR INSTALLING THIS UNIT. MULTIPLE POWER SOURCES MAY BE PRESENT. FAILURE TO DO SO MAY CAUSE PROPERTY DAMAGE, PERSONAL INJURY OR DEATH.

REPLACE OR CLEAN FILTER

IMPORTANT NOTE: NEVER OPERATE UNIT WITHOUT A FILTER INSTALLED AS DUST AND LINT WILL BUILD UP ON INTERNAL PARTS RESULTING IN LOSS OF EFFICIENCY, EQUIPMENT DAMAGE AND POSSIBLE FIRE.

A return air filter is not supplied with this unit; however, there must be a means of filtering the return air. An indoor air filter must be used with your comfort system. A properly maintained filter will keep the indoor coil of your comfort system clean. A dirty coil could cause poor operation and/or severe equipment damage.

The installer of your unit can tell you where your filter(s) are and how to clean or replace them.

Check your return filter(s) at least once every two months. When they are dirty, replace or clean as required. Disposable type filters should be replaced. Reusable type filters may be cleaned.

NOTE: REUSABLE TYPE FILTERS SHOULD BE WASHED WITH WARM WATER, DRIED COMPLETELY AND SPRAYED WITH AN ADHESIVE ACCORDING TO THE MANUFACTURERS RECOMMENDATIONS.

You may want to ask your dealer about high efficiency filters. High efficiency filters are available in both electronic and non-electronic types. These filters can do a better job of catching small airborne particles.

Improper filter maintenance is the most common cause of inadequate heating or cooling performance. Filters should be cleaned (permanent) or replaced (disposable) every two months or as required. When replacing a filter, it must be replaced with a filter of the same type and size and always make certain the air flow arrows on the filter point in the proper direction.

CONDENSER, EVAPORATOR AND INDUCED DRAFT MOTORS

The bearings on the air circulating blower motor, condenser motor and the induced draft fan motor are permanently lubricated and require no further lubrication.

COMPRESSOR

The compressor motor is hermetically sealed and does not require additional oiling.

ANNUAL INSPECTION (QUALIFIED SERVICER ONLY)

Your package unit should be inspected by a qualified installer, or service agency at least twice every year. This check should be performed before the heating and cooling seasons begin. This will ensure that adequate combustion air is being drawn and the vent system is working properly. Particular attention should be paid to the following items. Repair as necessary.

- Check physical support of the unit. Ensure it is sound without any sagging, cracks, or gaps, around the base.
- Check for obvious signs of deterioration of the unit.
- Flue Hood and Combustion Air Inlet. Check for blockage (wasp nest, etc.) and corrosion.

FLUE HOOD (QUALIFIED SERVICER ONLY)

- Return Air Connection. Check for physical soundness and ensure that the connection is firmly sealed to the package unit casing.
- Heat exchanger. Check for corrosion and/or obstructions within the heat exchanger passageways.
- Burners. Check for proper ignition, burner flame, and flame sense.
- Wiring. Check wires for damage. Check electrical connections for tightness and/or corrosion.
- Filters. Check that filters are clean and in the proper placement in the unit or duct system.
- Louvers. Inspect air inlet louvers inside the heat exchanger compartments. Ensure the area is clean and free of dirt and debris.

CLEAN OUTSIDE COIL (QUALIFIED SERVICER ONLY)

The outdoor coil should be inspected annually. It is important to keep the outdoor coil clean. Dirt, leaves, or debris could restrict the airflow. If cleaning of the outdoor coil becomes necessary, hire a qualified servicer. Inexperienced people could easily puncture the tubing in the coil.

CLEAN INDOOR COIL (QUALIFIED SERVICER ONLY)

Before cleaning the indoor coil, A2L sensor must be removed from the unit to avoid damage and contamination. The Indoor coil should be inspected and cleaned as frequently as necessary to keep the finned areas free of debris. Any cleaning method, using approved cleaning agents, should be performed from inside-out (opposite operating airflow direction) to prevent damage to the tube, fin coil, and any other components. Prior to resuming unit operation, ensure to reinstall the A2L sensor.

Before Calling Your Servicer

- Check the thermostat to confirm that it is properly set.
- Check the disconnect switch near the unit to confirm that it is closed.
- Check the electrical panel for tripped circuit breakers or open fuses. Reset the circuit breakers or replace fuses as necessary.
- Check for blockage of the indoor air inlets and outlets. Confirm that they are open and have not been blocked by objects (rugs, curtains or furniture).
- Check for obstructions on the unit. Confirm that it has not been covered on the sides or the top. Remove any obstruction that can be safely removed. If the unit is covered with dirt or debris, call a qualified servicer to clean it.
- Check the filter. If it is dirty, clean or replace it.

START-UP CHECKLIST

Residential Package - (Indoor Section)					
		Model Number			
		Serial Number			
ELECTRICAL					
Line Voltage (Measure L1 and L2 Voltage)	L1 - L2				
Secondary Voltage (Measure Transformer Output Voltage)	R - C				
Blower Amps					
Heat Strip 1 - Amps					
Heat Strip 2 - Amps					
BLOWER EXTERNAL STATIC PRESSURE					
Return Air Static Pressure			IN. W.C.		
Supply Air Static Pressure			IN. W.C.		
Total External Static Pressure (Ignoring +/- from the reading above, add total here)			IN. W.C.		
TEMPERATURES					
Return Air Temperature (Dry bulb / Wet bulb)			DB °F		WB °F
Cooling Supply Air Temperature (Dry bulb / Wet bulb)			DB °F		WB °F
Heating Supply Air Temperature			DB °F		
Temperature Rise			DB °F		
Delta T (Difference between Supply and Return Temperatures)			DB °F		
GAS PRESSURES					
Gas Inlet Pressure			IN. W.C.		
Gas Manifold Pressure (Low Fire)			IN. W.C.		
Gas Manifold Pressure (High Fire)			IN. W.C.		
Gas Type (NG) = Natural Gas / (LP) = Liquid Propane					
Residential Package - (Outdoor Section)					
ELECTRICAL					
Supply Voltage (Measure L1 and L2 Voltage)	L1 - L2				
Compressor Amps					
Condenser Fan Amps					
PRESSURES / TEMPERATURES					
Suction Circuit (Pressure / Suction Line Temperature)	PSIG		TEMP		°F
Liquid Circuit (Pressure / Liquid Temperature)	PSIG		TEMP		°F
Outdoor Air Temperature (Dry bulb / Wet bulb)			DB °F		WB °F
SUPERHEAT / SUBCOOLING	SH		SC		
Additional Checks					
Check wire routings for any rubbing					
Check product for proper draining					
Check for kinked pressure switch tubing.					
Check flue elbow for alignment and clamp tightness.					
Check screw tightness on blower wheel.					
Check factory wiring and wire connections.					
Check screw tightness on Outdoor Motor and Blade					
Check product for proper clearances as noted by installation instructions					
°F to °C formula: (°F - 32) divided by 1.8 = °C	**°C to °F formula: (°C multiplied by 1.8) + 32 = °F**				

CUSTOMER FEEDBACK
We are very interested in all product comments.
Please fill out the feedback form on one of the following links:
Goodman® Brand Products: (http://www.goodmanmfg.com/about/contact-us).
Amana® Brand Products: (http://www.amana-hac.com/about-us/contact-us).
You can also scan the QR code on the right for the product brand you purchased to be directed to the feedback page.

GOODMAN® BRAND

AMANA® BRAND

19001 Kermier Rd., Waller, TX 77484
www.goodmanmfg.com • www.amana-hac.com
© 2025 Daikin Comfort Technologies Manufacturing, Inc.
Amana is a registered trademark of Maytag Corporation or its related companies and is used under license. All rights reserved.