Installation Instructions for *RVS96 & *DVS96 Ultra Low NOx Variable Speed Gas Furnace

(Type FSP CATEGORY IV Direct or Non Direct Vent Air Furnace)

These furnaces comply with requirements embodied in the American National Standard/National Standard of Canada ANSI Z21.47•CSA-2.3 Gas Fired Central Furnaces.

Installer:
Affix all manuals adjacent to the unit.

As a professional installer you have an obligation to know the product better than the customer. This includes all safety precautions and related items.

Prior to actual installation, thoroughly familiarize yourself with this Instruction Manual. Pay special attention to all safety warnings. Often during installation or repair it is possible to place yourself in a position which is more hazardous than when the unit is in operation.

Remember, it is your responsibility to install the product safely and to know it well enough to be able to instruct a customer in its safe use.

Safety is a matter of common sense...a matter of thinking before acting. Most dealers have a list of specific good safety practices...follow them.

The precautions listed in this Installation Manual are intended as supplemental to existing practices. However, if there is a direct conflict between existing practices and the content of this manual, the precautions listed here take precedence.

RECOGNIZE THIS SYMBOL AS A SAFETY PRECAUTION.

***NOTE: Please contact your distributor or our website for the applicable Specification Sheet referred to in this manual.**

WARNING

Only personnel that have been trained to install, adjust, service, maintenance or repair (hereinafter, "service") the equipment specified in this manual should service the equipment.
This equipment is not intended for use by persons (including children) with reduced physical, sensory or mental capacities, or lack of experience and knowledge, unless they have been given supervision or instruction concerning use of the appliance by a person responsible for their safety.
Children should be supervised to ensure that they do not play with the equipment.
The manufacturer will not be responsible for any injury or property damage arising from improper supervision, service or service procedures. If you service this unit, you assume responsibility for any injury or property damage which may result. In addition, in jurisdictions that require one or more licenses to service the equipment specified in this manual, only licensed personnel should service the equipment. Improper supervision, installation, adjustment, servicing, maintenance or repair of the equipment specified in this manual, or attempting to install, adjust, service or repair the equipment specified in this manual without proper supervision or training may result in product damage, property damage, personal injury or death.

WARNING

Do not bypass safety devices.

WARNING

THIS FURNACE MAY BE PAIRED WITH A COOLING UNIT THAT USES R-32 REFRIGERANT. IF THE COOLING UNIT PAIRED WITH THIS FURNACE DOES NOT USE R-32, THE R-32 FUNCTION IN THE FURNACE CONTROL BOARD NEEDS TO BE TURNED OFF. PLEASE SEE THE ELECTRICAL AND THE R-32 SECTIONS FOR MORE DETAILS. **REFRIGERANT SYSTEMS OTHER THAN 410-A OR R-32 MAY REQUIRE AN ADDITIONAL MITIGATION CONTROL BOARD. REFER TO THE INSTALLATION MANUAL OF THE INDOOR EVAPORATOR COIL TO DETERMINE INSTALLATION REQUIREMENTS FOR THAT SUPPLIER'S REFRIGERANT DETECTION SYSTEM.**

90% HEX

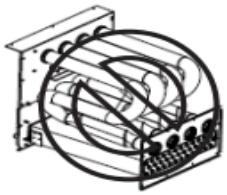

DO NOT LIFT PRODUCT USING HEAT EXCHANGER

19001 Kermier Rd., Waller, TX 77484
www.goodmanmfg.com • www.amana-hac.com

© 2026 Daikin Comfort Technologies Manufacturing, Inc.

AMANA HEATING & AIR CONDITIONING ® / TM 2026 Amana. Manufactured under license by Daikin. Limited warranty provided by the manufacturer. All trademarks are the property of their respective owners.

IOG-2042A
09/2026

CONTENTS

Safety Considerations 3
Product Application 5
Location Requirements & Considerations 6
Combustion & Ventilation Air Requirements 8
Installation Positions 8
Horizontal Applications & Considerations 9
High Altitude Installation 10
Vent Pipe & Combustion Air Pipe 10
Condensate Drain Lines & Drain Trap 17
Electrical Connections 22
R-32 Features 29
Startup Procedure & Adjustment 29
Gas Supply And Piping 30
Circulating Air & Filters 33
Operational Checks Safety Circuit Description 37
Troubleshooting 38
Maintenance 38
Filters 38
Before Leaving An Installation 39
Repair And Replacement Parts 39
Menu Options 40
Status Codes 41
Troubleshooting Chart 42
Wiring Diagrams 45

This device, which was assembled by Daikin Comfort Technologies Manufacturing, L.P., contains a component that is classified as an intentional radiator. This intentional radiator has been certified by the FCC: FCC ID QOQBGM111. And this international radiator has an Industry Canada ID: IC 5123A-BGM111.

This device complies with Part 15 of the FCC's Rules. Operation of this device is subject to two conditions:

(1) This device may not cause harmful interference; and
(2) This device must accept any interference received, including interference that may cause undesirable operation.

And this device meets the applicable Industry Canada technical specifications.

The manufacturer of the intentional radiator (model no. BGM111) is Silicon Laboratories Finland Oy, which can be contacted by calling 617-951-0200. (www.silabs.com)

Daikin Comfort Technologies Manufacturing, L.P. may be contacted by calling 713-861-2500, or at 19001 Kermier Rd., Waller TX 77484. (www.GoodmanMFG.com)

This equipment complies with FCC radiation exposure limits. To ensure compliance, human proximity to the antenna shall not be less than 20 cm during normal operations.

NOTE: This equipment has been tested and found to comply with the limits for a Class B digital device, pursuant to part 15 of the FCC Rules. These limits are designed to provide reasonable protection against harmful interference in a residential installation. This equipment generates, uses and can radiate radio frequency energy and, if not installed and used in accordance with the instructions, may cause harmful interference to radio communications. However, there is no guarantee that interference will not occur in a particular installation. If this equipment does cause harmful interference to radio or television reception, which can be determined by turning the equipment off and on, the user is encouraged to try to correct the interference by one or more of the following measures:

—Reorient or relocate the receiving antenna.
—Increase the separation between the equipment and receiver.
—Connect the equipment into an outlet on a circuit different from that to which the receiver is connected.
—Consult the dealer or an experienced radio/ TV technician for help.

WARNING

Changes or modifications not expressly approved by the party responsible for compliance could void the user's authority to operate the equipment.

SAFETY CONSIDERATIONS

IMPORTANT NOTE: This unit is designed to meet the NOx requirement of 14 Ng/J maximum as may be required in certain states and air quality management districts.

This unit has a control system that compensates for certain installation and environmental conditions. This unit must:

- Be properly installed, operated, and maintained per the instructions.
- Be serviced only by properly trained service technicians.

Units that are not installed, maintained, or operated properly may result in "noisy" operation during the heating cycle. If this unit is making unusual or objectionable noises during the heating cycle, turn the heat off at the thermostat and contact a qualified service organization right away.

Adhere to the following warnings and cautions when installing, adjusting, altering, servicing, or operating the furnace. To ensure proper installation and operation, thoroughly read this manual for specifics pertaining to the installation and application of this product.

This furnace is manufactured for use with natural gas only.

Install this furnace only in a location and position as specified in **LOCATION REQUIREMENTS & CONSIDERATIONS** section and **INSTALLATION POSITIONS** section of this manual.

Provide adequate combustion and ventilation air to the furnace as specified in **COMBUSTION & VENTILATION AIR REQUIREMENTS** section of this manual.
Combustion products must be discharged to the outdoors. Connect this furnace to an approved vent system only, as specified in **VENT/FLUE PIPE & COMBUSTION AIR PIPE** section of this manual.

Never test for gas leaks with an open flame. Use a commercially available soap solution made specifically for the detection of leaks to check all connections, as specified in **GAS SUPPLY AND PIPING** section of this manual.

Always install a furnace to operate within the furnace's intended temperature-rise range with a duct system which has external static pressure within the allowable range, as specified on the furnace rating plate and Operational Checks section of these instructions.

When a furnace is installed so that supply ducts carry air circulated by the furnace to areas outside the space containing the furnace, the return air shall also be handled by duct(s) sealed to the furnace casing and terminating outside the space containing the furnace.

A gas-fired furnace for installation in a residential garage must be installed as specified in the **LOCATION REQUIREMENTS AND CONSIDERATIONS** section of this manual.

This furnace cannot be used as a construction site heater.

CAUTION

FROZEN AND BURST WATER PIPE HAZARD
Failure to protect against the risk of freezing may result in property damage.
Special precautions MUST be made if installing furnace in an area which may drop below freezing. This can cause improper operation or damage to equipment. If the furnace environment has the potential of freezing, the drain trap and drain line must be protected. The use of accessory drain trap heaters, electric heat tape and/or RV antifreeze is recommended for these installations.

WARNING

To prevent personal injury or death due to improper installation, adjustment, alteration, service or maintenance, refer to this manual. For additional assistance or information, consult a qualified installer, servicer agency or the gas supplier.

WARNING

If the information in these instructions is not followed exactly, a fire or explosion may result causing property damage, personal injury or loss of life.
- do not store or use gasoline or other flammable vapors and liquids in the vicinity of this or any other appliance.
- WHAT TO DO IF YOU SMELL GAS:

- **Do not try to light any appliance.**
- **Do not touch any electrical switch; do not use any phone in your building.**
- **Immediately call your gas supplier from a neighbor's phone. Follow the gas supplier's instructions. If you cannot reach your gas supplier, call the fire department.**

- Installation and service must be performed by a qualified installer, service agency or the gas supplier.

WARNING

HEATING UNIT SHOULD NOT BE UTILIZED WITHOUT REASONABLE, ROUTINE, INSPECTION, MAINTENANCE AND SUPERVISION. IF THE BUILDING IN WHICH ANY SUCH DEVICE IS LOCATED WILL BE VACANT, CARE SHOULD BE TAKEN THAT SUCH DEVICE IS ROUTINELY INSPECTED, MAINTAINED AND MONITORED. IN THE EVENT THAT THE BUILDING MAY BE EXPOSED TO FREEZING TEMPERATURES AND WILL BE VACANT, ALL WATER-BEARING PIPES SHOULD BE DRAINED, THE BUILDING SHOULD BE PROPERLY WINTERIZED, AND THE WATER SOURCE CLOSED. IN THE EVENT THAT THE BUILDING MAY BE EXPOSED TO FREEZING TEMPERATURES AND WILL BE VACANT, ANY HYDRONIC COIL UNITS SHOULD BE DRAINED AS WELL AND, IN SUCH CASE, ALTERNATIVE HEAT SOURCES SHOULD BE UTILIZED.

WARNING

POSSIBLE PROPERTY DAMAGE, PERSONAL INJURY OR DEATH DUE TO FIRE, EXPLOSION, SMOKE, SOOT, CONDENSATION, ELECTRICAL SHOCK OR CARBON MONOXIDE MAY RESULT FROM IMPROPER INSTALLATION, REPAIR OPERATION, OR MAINTENANCE OF THIS PRODUCT.

WARNING

SHOULD OVERHEATING OCCUR OR THE GAS SUPPLY FAIL TO SHUT OFF, TURN OFF THE MANUAL GAS SHUTOFF VALVE EXTERNAL TO THE FURNACE BEFORE TURNING OFF THE ELECTRICAL SUPPLY.

DANGER
PELIGRO

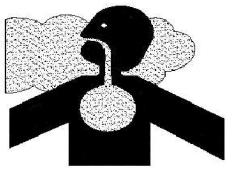

CARBON MONOXIDE POISONING HAZARD

Special Warning for Installation of Furnace or Air Handling Units in Enclosed Areas such as Garages, Utility Rooms or Parking Areas

Carbon monoxide producing devices (such as an automobile, space heater, gas water heater, etc.) should not be operated in enclosed areas such as unventilated garages, utility rooms or parking areas because of the danger of carbon monoxide (CO) poisoning resulting from the exhaust emissions. If a furnace or air handler is installed in an enclosed area such as a garage, utility room or parking area and a carbon monoxide producing device is operated therein, there must be adequate, direct outside ventilation.

This ventilation is necessary to avoid the danger of CO poisoning which can occur if a carbon monoxide producing device continues to operate in the enclosed area. Carbon monoxide emissions can be (re)circulated throughout the structure if the furnace or air handler is operating in any mode.

CO can cause serious illness including permanent brain damage or death.

B10259-216

RIESGO DE INTOXICACIÓN POR MONÓXIDO DE CARBONO

Advertencia especial para la instalación de calentadores ó manejadoras de aire en áreas cerradas como estacionamientos ó cuartos de servicio.

Los equipos ó aparatos que producen monóxido de carbono (tal como automóvil, calentador de gas, calentador de agua por medio de gas, etc) no deben ser operados en áreas cerradas debido al riesgo de envenenamiento por monóxido de carbono (CO) que resulta de las emisiones de gases de combustión. Si el equipo ó aparato se opera en dichas áreas, debe existir una adecuada ventilación directa al exterior.

Esta ventilación es necesaria para evitar el peligro de envenenamiento por CO, que puede ocurrir si un dispositivo que produce monóxido de carbono sigue operando en el lugar cerrado.

Las emisiones de monóxido de carbono pueden circular a través del aparato cuando se opera en cualquier modo.

El monóxido de carbono puede causar enfermedades severas como daño cerebral permanente ó muerte.

B10259-216

RISQUE D'EMPOISONNEMENT AU MONOXYDE DE CARBONE

Avertissement special au sujet de l'installation d'appareils de chauffage ou de traitement d'air dans des endroits clos, tets les garages, les locaux d'entretien et les stationnements.

Evitez de mettre en marche les appareils produisant du monoxyde de carbone (tels que les automobile, les appareils de chauffage autonome,etc.) dans des endroits non ventilés tels que les d'empoisonnement au monoxyde de carbone. Si vous devez faire fonctionner ces appareils dans un endroit clos, assures-vous qu'il y ait une ventilation directe provenant de l'exterier.

Cette ventilation est nécessaire pour éviter le danger d'intoxication au CO pouvant survenir si un appareil produisant du monoxyde de carbone continue de fonctionner au sein de la zone confinée.

Les émissions de monoxyde de carbone peuvent etre recircules dans les endroits clos, si l'appareil de chauffage ou de traitement d'air sont en marche.

Le monoxyde de carbone peut causer des maladies graves telles que des dommages permanents au cerveau et meme la mort.

B10259-216

Shipping Inspection

All units are securely packed in shipping containers tested according to International Safe Transit Association specifications. The carton must be checked upon arrival for external damage. If damage is found, a request for inspection by carrier's agent must be made in writing immediately.

The furnace must be carefully inspected on arrival for damage and bolts or screws which may have come loose in transit. In the event of damage the consignee should:

1. Make a notation on delivery receipt of any visible damage to shipment or container.
2. Notify carrier promptly and request an inspection.
3. With concealed damage, carrier must be notified as soon as possible - preferably within five days.
4. File the claim with the following support documents within a nine month statute of limitations.
   - Original or certified copy of the Bill of Lading, or indemnity bond.
   - Original paid freight bill or indemnity in lieu thereof.
   - Original or certified copy of the invoice, showing trade and other discounts or reductions.
   - Copy of the inspection report issued by carrier's representative at the time damage is reported to carrier.

The carrier is responsible for making prompt inspection of damage and for a thorough investigation of each claim. The distributor or manufacturer will not accept claims from dealers for transportation damage.

Electrostatic Discharge (ESD) Precautions

NOTE: Discharge your body's static electricity before touching unit. An electrostatic discharge can adversely affect electrical components.

Use the following precautions during furnace installation and servicing to protect the integrated control module from damage. By putting the furnace, the control, and the person at the same electrostatic potential, these steps will help avoid exposing the integrated control module to electrostatic discharge. This procedure is applicable to both installed and non-installed (ungrounded) furnaces.

1. Disconnect all power to the furnace. Do not touch the integrated control module or any wire connected to the control prior to discharging your body's electrostatic charge to ground.
2. Firmly touch a clean, unpainted, metal surface of the furnaces near the control. Any tools held in a person's hand during grounding will be discharged.
3. Service integrated control module or connecting wiring following the discharge process in step 2. Use caution not to recharge your body with static electricity; (i.e., do not move or shuffle your feet, do not touch ungrounded objects, etc.). If you come in contact with an ungrounded object, repeat step 2 before touching control or wires.
4. Discharge your body to ground before removing a new control from its container. Follow steps 1 through 3 if installing the control on a furnace. Return any old or new controls to their containers before touching any ungrounded object.

To The Installer

Before installing this unit, please read this manual thoroughly to familiarize yourself with specific items which must be adhered to, including but not limited to: unit maximum external static pressure, gas pressures, BTU input rating, proper electrical connections, circulating air temperature rise, minimum or maximum CFM, and motor speed connections.

WARNING

To prevent property damage, personal injury or death due to fire, do not install this furnace in a mobile home, trailer, or recreational vehicle.

PRODUCT APPLICATION

This furnace is primarily designed for residential home-heating applications. It is not designed or certified for use in mobile homes, trailers or recreational vehicles. Neither is it designed or certified for outdoor applications. The furnace must be installed indoors (i.e., attic space, crawl space, or garage area provided the garage area is enclosed with an operating door).

This furnace can be used in the following non-industrial commercial applications:

Schools, Office buildings, Churches, Retail stores, Nursing homes, Hotels/motels, Common or office areas.

In such applications, the furnace must be installed with the following stipulations:

- It must be installed per the installation instructions provided and per local and national codes.
- It must be installed indoors in a building constructed on site.
- It must be part of a ducted system and not used in a free air delivery application.
- It must not be used as a "make-up" air unit.
- It must be installed as a two-pipe systems for combustion air.
- All other warranty exclusions and restrictions apply This furnace is an ETL certified appliance and is appropriate for use with natural gas.
- Dual certification means that the combustion air inlet pipe is optional and the furnace can be vented as a:
- Non-direct vent (single pipe) central forced air furnace in which combustion air is taken from the installation area or from air ducted from the outside or,

- Direct vent (dual pipe) central forced air furnace in which all combustion air supplied directly to the furnace burners through a special air intake system outlined in these instructions.

NOTE: Meeting the following conditions is a requirement when using this furnace as a construction site heater:

- The furnace has a permanently installed venting system per these installation instructions.
- A room thermostat is used to control the furnace. Fixed jumpers that provide continuous heating CANNOT be used and can cause long term equipment damage. Bi-metal thermostats or any thermostat affected by vibration must be avoided during construction.
- The furnace is attached to permanent return air ducting sealed to the furnace.
- A return air temperature range between 60ºF (16ºC) and 80ºF (27ºC) is maintained.
- MERV 11 air filter(s) are installed in the system and inspected daily and replaced as needed during construction and upon completion of construction.
- The input rate and temperature rise settings are within furnace rating plate guidelines.
- The furnace must be installed as a two-pipe system, using 100% outside air for combustion during construction.
- The furnace heat exchanger, components, duct system, air filters, and evaporator coils are thoroughly cleaned following final construction clean up by a qualified person.
- All furnace operating conditions, including ignition, input rate, temperature rise, and venting, are verified by a qualified person according to these installation instructions.
- Furnace doors must be in place on the furnace while the furnace is operating in any mode.

NOTE: Damage or repairs due to failure to comply with these requirements is not covered by the manufacturer's warranty.

To ensure proper furnace operation, install, operate and maintain the furnace in accordance with these installation and operation instructions, all local building codes and ordinances. In their absence, follow the latest edition of the National Fuel Gas Code (NFPA 54/ANSI Z223.1), Installation Codes, local plumbing or waste water codes, and other applicable codes.

A copy of the National Fuel Gas Code (NFPA 54/ANSI Z223.1) can be obtained from any of the following:

American National Standards Institute
25 West 43rd Street, 4th Floor
New York, NY 10036

National Fire Protection Association
1 Batterymarch Park
Quincy, MA 02169-7471

CSA International
8501 East Pleasant Valley Road
Independence, OH 44131-5516

The rated heating capacity of the furnace should be greater than or equal to the total heat loss of the area to be heated. The total heat loss should be calculated by an approved method or in accordance with "ASHRAE Guide" or "Manual J-Load Calculations" published by the Air Conditioning Contractors of America.

LOCATION REQUIREMENTS & CONSIDERATIONS

WARNING

To prevent possible equipment damage, property damage, personal injury or death, the following bullet points must be observed when installing this unit.

WARNING

Possible property damage, personal injury or death due to fire, explosion, smoke, soot, condensation, electrical shock or carbon monoxide may result from improper installation, repair operation, or maintenance of this product.

Follow the instructions listed below and the guidelines provided in the *Combustion and Ventilation Air Requirements* section when selecting a furnace location.

- Centrally locate the furnace with respect to the proposed or existing air distribution system.
- Ensure the temperature of the return air entering the furnace is between 60°F and 80°F when the furnace is heating.
- Provide provisions for venting combustion products outdoors through a proper venting system. Special consideration should be given to vent/flue pipe routing and combustion air intake pipe when applicable. Refer to Vent/Flue Pipe and Combustion Air Pipe - Termination Locations for appropriate termination locations and to determine if the piping system from furnace to termination can be accomplished within the guidelines given. **NOTE:** The length of flue and/or combustion air piping can be a limiting factor in the location of the furnace.
- Locate the furnace so condensate flows downwards to the drain. Do not locate the furnace or its condensate drainage system in any area subject to below freezing temperatures without proper freeze protection. Refer to Condensate Drain Lines and Trap for further details.
- Ensure adequate combustion air is available for the furnace. Improper or insufficient combustion air can expose building occupants to gas combustion products that could include carbon monoxide. Refer to Combustion and Ventilation Air Requirements.

- Set the furnace on a level floor to enable proper condensate drainage. If the floor becomes wet or damp at times, place the furnace above the floor on a concrete base sized approximately 1-½" larger than the base of the furnace. Refer to the Horizontal Applications and Considerations for leveling of horizontal furnaces.
- Ensure upflow or horizontal furnaces are not installed directly on carpeting, or any other combustible material. The only combustible material allowed is wood.
- Exposure to contaminated combustion air will result in safety and performance-related problems. Do not install the furnace where the combustion air is exposed to the following substances:
  - Permanent wave solutions
  - Chlorinated waxes or cleaners
  - Chlorine-based swimming pool chemicals
  - Carbon tetrachloride
  - Water softening chemicals
  - Swimming pool chemicals
  - Deicing salts or chemicals
  - Halogen type refrigerants
  - Printing inks
  - Cleaning solutions (such as perchloroethylene)
  - Paint removers
  - Varnishes
  - Hydrochloric acid
  - Cements and glues
  - Antistatic fabric softeners for clothes dryers
- Masonry acid washing materials
- Protect a *non-direct vent* furnace from airborne contaminants. To ensure that the enclosed non-direct vent furnace has an adequate supply of combustion air, vent from a nearby uncontaminated room or from outdoors. Refer to the Combustion and Ventilation Air Requirements for details.
- If the furnace is used in connection with a cooling coil unit, install the furnace upstream or in parallel with the cooling coil unit. Premature heat exchanger failure will result if the cooling unit is placed ahead of the furnace.

For vertical (upflow) applications, the minimum cooling coil width shall not be less than furnace width minus 1". Additionally, a coil installed above an upflow furnace may be the same width as the furnace or may be one size larger than the furnace. Example: A "C" width coil may be installed with a "B" width furnace.

For upflow applications, the front of the coil and furnace must face the same direction.

- If the furnace is installed in a residential garage, position the furnace so that the burners and ignition source are located not less than 18" above the floor. Protect the furnace from physical damage by vehicles.
- If the furnace is installed horizontally, ensure the access doors are not on the "up/top" or "down/bottom" side of the furnace.
- Do not connect this furnace to a chimney flue that serves a separate appliance designed to burn solid fuel.

Clearances and Accessibility

NOTES:

- For servicing or cleaning, a 24" front clearance is required.
- Unit connections (electrical, flue and drain) may necessitate greater clearances than the minimum clearances listed above.
- In all cases, accessibility clearance must take precedence over clearances from the enclosure where accessibility clearances are greater.

*RVS96/*DVS96 MINIMUM CLEARANCES TO COMBUSTIBLE MATERIALS (INCHES)						
POSITION*	SIDES	REAR	FRONT	BOTTOM	FLUE	TOP
Upflow	0"	0"	3"	C	0"	1"
Horizontal (Upflow Models)	6"	0"	3"	C	0"	6"
Downflow	0"	1"	0"	1"	C	0"
Horizontal (Downflow Models)	6"	ALCOVE	0"	4"	C	0"

C = If placed on combustible floor, floor MUST be wood only.

Table 1

Installations must adhere to the clearances to combustible materials to which this furnace has been design certified. The minimum clearance information for this furnace is provided on the unit's clearance label. These clearances must be permanently maintained. Clearances must also accommodate an installation's gas, electrical, and drain trap and drain line connections. If the alternate combustion air intake or vent/flue connections are used additional clearance must be provided to accommodate these connections. Refer to Vent/Flue Pipe and Combustion Air Pipe for details.

NOTE: In addition to the required clearances to combustible materials, a minimum of 24" service clearance must be available in front of the unit.

A furnace installed in a confined space (i.e., a closet or utility room) must have two ventilation openings with a total minimum free area of 0.25 square inches per 1,000 BTU/hr of furnace input rating. Refer to Specification Sheet applicable to your model for minimum clearances to combustible surfaces. One of the ventilation openings must be within 12" of the top; the other opening must be within 12" of the bottom of the confined space. In a typical construction, the clearance between the door and door frame is usually adequate to satisfy this ventilation requirement.

Existing Furnace Removal

The following vent testing procedure is reproduced from the **American National Standard/National Standard of Canada for Gas-Fired Central Furnaces ANSI Z21.47, CSA-2.3 latest edition Section 1.23.1.**

The following steps shall be followed with each appliance connected to the venting system placed in operation, while any other appliances connected to the venting system are not in operation:

1. Seal any unused openings in the venting system.
2. Inspect the venting system for proper size and horizontal pitch, as required by the National Fuel Gas Code, ANSI Z223.1 instructions. Determine that there is no blockage or restriction, leakage, corrosion and other deficiencies which could cause an unsafe condition.
3. As far as practical, close all building doors and windows and all doors between the space in which the appliance(s) connected to the venting system are located and other spaces of the building.
4. Close fireplace dampers.
5. Turn on clothes dryers and any appliance not connected to the venting system. Turn on any exhaust fans, such as range hoods and bathroom exhausts, so they shall operate at maximum speed. Do not operate a summer exhaust fan.
6. Follow the lighting instructions. Place the appliance being inspected in operation. Adjust thermostat so appliance shall operate continuously.
7. If improper venting is observed during any of the above tests, the venting system must be corrected in accordance with the National Fuel Gas Code ANSI Z223.1/NFPA 54.
8. After it has been determined that each appliance connected to the venting system properly vents when tested as outlined above, return doors, windows, exhaust fans, fireplace dampers and any other gas burning appliance to their previous conditions of use.

If resizing is required on any portion of the venting system, use the appropriate table in Appendix G in the latest edition of the National Fuel Gas Code ANSI Z223.1 Installation Codes.

Thermostat Location

The thermostat should be placed approximately five feet from the floor on a vibration-free, inside wall in an area having good air circulation. Do not install the thermostat where it may be influenced by any of the following:

- Drafts, or dead spots behind doors, in corners, or under cabinets.
- Hot or cold air from registers.
- Radiant heat from the sun.
- Light fixtures or other appliances.
- Radiant heat from a fireplace.
- Concealed hot or cold water pipes, or chimneys.
- Unconditioned areas behind the thermostat, such as an outside wall.

Consult the instructions packaged with the thermostat for mounting instructions and further precautions.

COMBUSTION & VENTILATION AIR REQUIREMENTS

WARNING

To avoid property damage, personal injury or death, sufficient fresh air for proper combustion and ventilation of flue gases must be supplied. Most homes require outside air be supplied into the furnace area.

Improved construction and additional insulation in buildings have reduced heat loss by reducing air infiltration and escape around doors and windows. These changes have helped in reducing heating/cooling costs but have created a problem supplying combustion and ventilation air for gas fired and other fuel burning appliances. Appliances that pull air out of the house (clothes dryers, exhaust fans, fireplaces, etc.) increase the problem by starving appliances for air.

House depressurization can cause back drafting or improper combustion of gas-fired appliances, thereby exposing building occupants to gas combustion products that could include carbon monoxide.

If this furnace is to be installed in the same space with other gas appliances, such as a water heater, ensure there is an adequate supply of combustion and ventilation air for all appliances. Refer to the latest edition of the National Fuel Gas Code NFPA 54/ANSI Z223.1 or applicable provisions of the local building codes for determining the combustion air requirements for the appliances.

Most homes will require outside air be supplied to the furnace area by means of ventilation grilles or ducts connecting directly to the outdoors or spaces open to the outdoors such as attics or crawl spaces.

INSTALLATION POSITIONS

This furnace may be installed in an upright position or horizontal on either the left or right side panel. Do not install this furnace on its back. For upright upflow furnaces, return air ductwork may be attached to the side panel(s) and/or basepan. For horizontal upflow furnaces, return air ductwork must be attached to the blower compartment end of the furnace. For both upright or horizontal downflow furnaces, return ductwork must be attached to the basepan (top end of the blower compartment). **NOTE:** Ductwork must never be attached to the back of the furnace. Contact your distributor for proper airflow requirements and number of required ductwork connections. Refer to “recommended Installation Positions” figure for appropriate installation positions, ductwork connections, and resulting airflow arrangements.

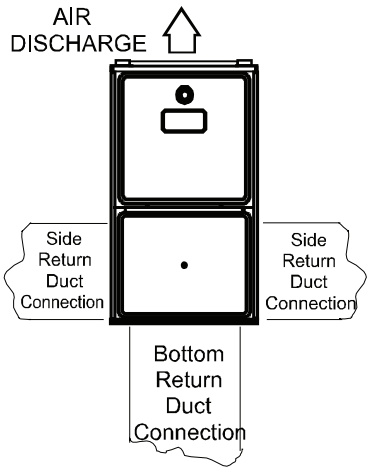

UPFLOW
UPRIGHT

Alternate Vent/Flue Location
Figure 1A

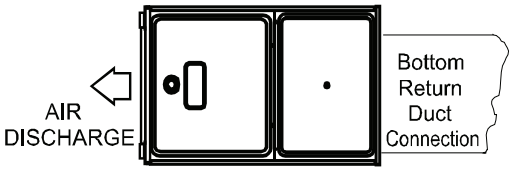

UPFLOW/DOWNFLOW HORIZONTAL
LEFT AIR DISCHARGE

Figure 1B

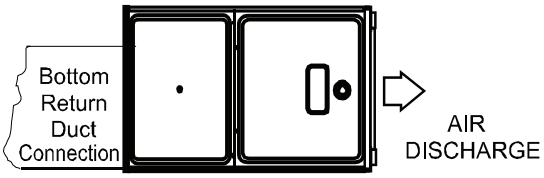

UPFLOW/DOWNFLOW HORIZONTAL
RIGHT AIR DISCHARGE

Figure 1C

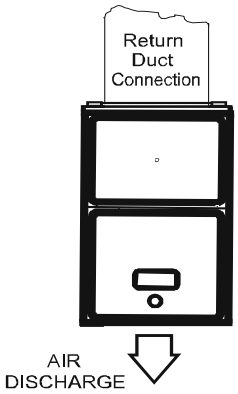

DOWNFLOW

Figure 1D
Recommended Installation Positions

HORIZONTAL APPLICATIONS & CONSIDERATIONS

When installing a furnace horizontally, additional consideration must be given to the following:

Furnace Suspension

If suspending the furnace from rafters or joists, use ⅜" threaded rod and 2"x2"x⅛" angle iron as shown in the following diagram. The length of rod will depend on the application and the clearances necessary.

If the furnace is installed in a crawl space it must be suspended from the floor joist or supported by a concrete pad. Never install the furnace on the ground or allow it to be exposed to water.

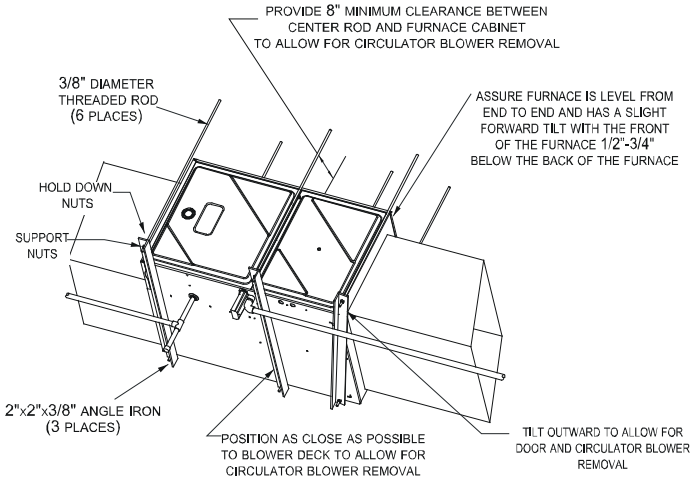

Figure 2

Front Cover Pressure Switch Tube Location

When a furnace is installed horizontally with left side down, the front cover pressure switch tube must be re-located to the lower port of the collector box cover.

1. Remove tube from front cover pressure switch and collector box cover.
2. Remove rubber plug from bottom collector box port and install on top collector box port.
3. Locate 24" x ¼" tube in bag assembly.
4. Install one end on front cover pressure switch.
5. Route tube to lower port on collector box cover and cut off excess tubing.

Drain Trap and Lines

In horizontal applications the condensate drain trap is secured to the furnace side panel, suspending it below the furnace. A minimum clearance of 5.5" below the furnace must be provided for the drain trap. Additionally, the appropriate downward piping slope must be maintained from the drain trap to the drain location. Refer to Condensate Drain Trap and Lines for further details. If the drain trap and drain line will be exposed to temperatures near or below freezing, adequate measures must be taken to prevent condensate from freezing.

Leveling

Leveling ensures proper condensate drainage from the heat exchanger. For proper flue pipe drainage, the furnace must be level lengthwise from end to end. The furnace should have a slight tilt from back to front with the access doors downhill from the back panel approximately ½" to ¾". The slight tilt allows the heat exchanger condensate, generated in the recuperator coil, to flow forward to the recuperator coil frontcover.

Alternate Electrical and Gas Line Connections

This furnace has provisions allowing for electrical and gas line connections through either side panel. In horizontal applications the connections can be made either through the "top" or "bottom" of the furnace.

Drain Pan

A drain pan must be provided if the furnace is installed above a conditioned area. The drain pan must cover the entire area under the furnace (and air conditioning coil if applicable).

Freeze Protection

Refer to Horizontal Applications and Conditions - Drain Trap and Lines.

HIGH ALTITUDE INSTALLATION

The furnace, as shipped, requires no change to run between 0-4500 feet. At all altitudes, the air temperature rise must be within the range listed on the Specification Sheet applicable to your model for the fuel used. All installations above 4,500 feet require manifold pressure adjustments and combustion analysis. Refer to the "Gas Supply Pressure Measurement" section for instruction on how to accurately measure and adjust manifold "outlet" pressure. The furnace should operate for a minimum of 15 minutes before taking a combustion sample. Combustion samples should be taken from beyond the furnace exhaust and must be within provided CO_2% range. See table 2 for recommended manifold pressure adjustments and proper CO_2% range. Gas heating values can vary; further pressure adjustment may be necessary to ensure furnace operates within acceptable CO_2 range.

96% Model	Manifold Pressure at 5000 ft	Manifold Pressure at 7500 ft	CO2% Natural Gas	Max Allowable Venting (3 in only)
*RVS960603BU	2.5" w.c.	2.4" w.c.	6.5 - 8.5	100 ft
*RVS960805CU				80 ft
*DVS960603BU	2.5" w.c.	2.4" w.c.	6.5 - 8.5	100 ft
*DVS960805CU				80 ft

Table 2

VENT PIPE & COMBUSTION AIR PIPE

This manual will refer to the pipe that discharges products of combustion to the outdoors as the "vent" pipe or "flue" pipe. The pipe that supplies air for combustion to the furnace will be referred to as the "intake" pipe or "combustion air" pipe.

This furnace is dual certified and may be installed as a non-direct vent (single pipe) or direct vent (dual pipe) appliance.

WARNING

Upon completion of the furnace installation, carefully inspect the entire flue system both inside and outside of the furnace to assure it is properly sealed. Leaks in the flue system can result in serious personal injury or death due to exposure to flue products, including carbon monoxide.

WARNING

Failure to follow these instructions can result in bodily injury or death. Carefully read and follow all instructions given in this section.

WARNING

To avoid bodily injury, fire or explosion, solvent cements must be kept away from all ignition sources (i.e. sparks, open flames, and excessive heat) as they are combustible liquids. Avoid breathing cement vapors or contact with skin and/or eyes.

Materials

PVC, CPVC, or ABS pipe & fittings are typically used as venting and intake pipe materials. All 90° elbows must be medium or long radius types. A medium radius elbow should measure ~3-1/16" minimum from the plane of one opening to the center line of the other opening for 2" diameter pipe, and ~4-9/16" minimum for 3" pipe.

In addition to these materials, Innoflue® by Centrotherm Eco Systems is also an approved vent and combustion air materials for installations in the U.S.A. Manufacturers Installation instructions for these products must be followed. These products have specific instructions for installing, joining and terminating. Do not mix materials or components of one manufacturer with materials or components of another manufacturer. Refer to the following chart for plastic pipe & fittings specifications

VENTING MATERIAL REQUIREMENTS	
PVC	ASTM STANDARD
SCHEDULE 40 PIPE	D1785
SDR 21 or 26 PIPE	D2241
SYTSTEM 1738® (IPEX)	D1784, UL 1738
SCHEDULE 40 FITTINGS	D2466
SYTSTEM 1738® FITTINGS	D1784, UL 1738
ABS	
SCHEDULE 40 PIPE	D1527
FITTINGS	D2468
CPVC	
SCHEDULE 40 PIPE	F441
SDR 21 or 26 PIPE	F442
FITTINGS	F438
POLYPROPYLENE	
INNOFLUE® (CENTROTHERM)	UL 1738
PRIMER & SOLVENT CEMENT	
PVC PRIMER	F656
CPVC PRIMER	F656
PVC SOLVENT CEMENT	D2564
CPVC SOLVENT CEMENT	F493
ABS SOLVENT CEMENT	D2235
ABS/PVC/CPVC ALL PURPOSE CEMENT (FOR PIPE & FITTINGS OF THE SAME MATERIAL)	D2564, D2235, F493
TRANSITION CEMENT FOR ABS TO PVC or CPVC	D3188
INSTALLATIONS IN CANADA	
PVC & CPVC PIPE & FITTINGS	ULC S636
PVC & CPVC SOLVENT CEMENT	
TRANSITION CEMENT	
INNOFLUE® (CENTROTHERM)	
POLYPRO® (DURAVENT)	
SYSTEM 636® (IPEX)	

Table 3

Installation

This furnace is manufactured with 2” CPVC vent & intake couplings. Use transition cement to connect PVC or ABS pipe to these fittings. For furnaces requiring installation of 3” pipe, the transition from 2” to 3” should be made as close to the furnace as possible, and only when the piping is sloped enough to prevent condensation from collecting. This furnace must not be connected to Type B, BW, or L vent or vent connector, and must not be vented into masonry chimney. A masonry chimney may be used as a chase or passage way for approved venting materials providing the masonry chimney is not also being used to vent products of combustion. Never common vent this appliance with another appliance. Never use a vent which is used by a solid fuel appliance.

Piping may run vertically or horizontally and must be adequately supported to prevent strain on joints, sagging, separation, and detachment from the furnace. Horizontal runs of piping must be supported every three to five feet. Condensation within the furnace secondary heat exchanger and in the vent pipe is a normal occurrence. Vent pipe must be installed to maintain a minimum ¼ inch per foot downward slope toward the furnace to return condensate to the furnace’s drain system. Condensation may also occur in the intake pipe. This commonly takes place during the summer months when humid air enters an intake pipe that runs through a cool basement or other conditioned space.

Precautions should be taken to prevent condensate from freezing inside the flue/vent pipe, combustion air intake pipe and/or at the pipe terminations. All flue/vent and/or combustion air piping exposed to temperatures below 35°F for extended periods of time should be insulated with 1/2” thick closed cell foam. All vent/flue piping exposed to outdoors in excess of the terminations permitted as described in the provided installation manual should be insulated with 1/2” thick closed cell foam. Inspect piping for leaks prior to installing insulation. If the combustion air intake or flue vent pipe is to be installed above a finished ceiling or other area where dripping of condensate will be objectionable, insulating the combustion air pipe may be necessary. Use 1/2” thick closed cell foam insulation where required. Refer to vent & intake options for using the RF000142 kit and managing condensation.

WARNING

To avoid bodily injury, fire or explosion, solvent cements must be kept away from all ignition sources (i.e. sparks, open flames, and excessive heat) as they are combustible liquids. Avoid breathing cement vapors or contact with skin and/or eyes.

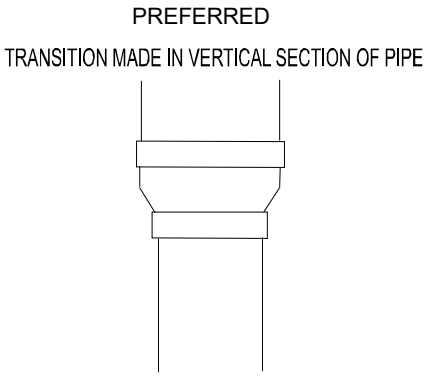

Figure 3

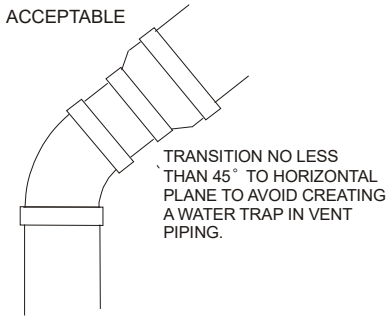

Figure 4

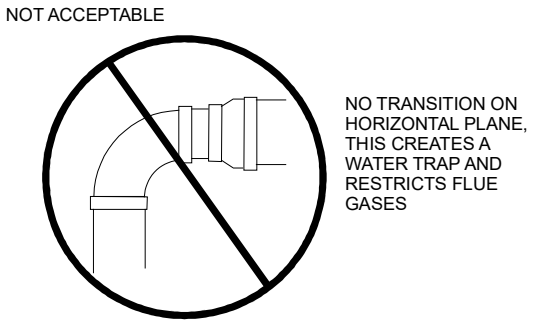

Figure 5

Precautions must be taken to prevent condensate from freezing inside the vent pipe. All vent piping exposed to freezing temperatures must be insulated with ½" thick closed cell foam. Inspect piping for leaks prior to installing insulation.

Pipe Sizing

Consult table 4 to determine what diameter piping is required for your installation. Lengths shown in table 4 apply to single pipe & two pipe installations. In a two pipe installation do not add intake and vent pipe lengths together. Both pipes would normally be equal in length, if different, then the longest pipe must be within the limits of table 4. It is preferable to up-size from 2" to 2.5" or 3" pipe if the pipe length & elbow count are near maximum. This will help avoid nuisance pressure switch opening caused by prevailing winds & sudden changes in atmospheric pressure.

0 - 4,999 FT ALTITUDE

MODEL	Pipe Size (in)	Number of Elbows							
		1	2	3	4	5	6	7	8
*RVS960603BU	2	90	85	80	75	70	65	60	55
	3	158	151	144	137	130	123	116	109
*RVS960805CU	2	55	50	45	40	35	30	25	20
	3	151	144	137	130	123	116	109	102
*DVS960603BU	2	90	85	80	75	70	65	60	55
	3	158	151	144	137	130	123	116	109
*DVS960805CU	2	55	50	45	40	35	30	25	20
	3	151	144	137	130	123	116	109	102

5,000 - 7,500 FT ALTITUDE

MODEL	Pipe Size (in)	Number of Elbows							
		1	2	3	4	5	6	7	8
*RVS960603BU	3	100	93	87	81	75	69	63	57
*RVS960805CU	3	80	73	67	61	55	49	43	37
*DVS960603BU	3	100	93	87	81	75	69	63	57
*DVS960805CU	3	80	73	67	61	55	49	43	37

Table 4

Vent Pipe Connection

The vent pipe outlet is sized to accept 2" pipe. Secure vent pipe directly into the furnace fitting with the appropriate glue. Alternately, a small section of 2" pipe may be glued in the furnace socket and a rubber coupling installed to allow removal for future service. Piping should be routed in a manner to avoid contact with refrigerant lines, metering devices, condensate drain lines, etc. If necessary, clearances may be increased by creating an offset using two 45° elbows (Figure 6).

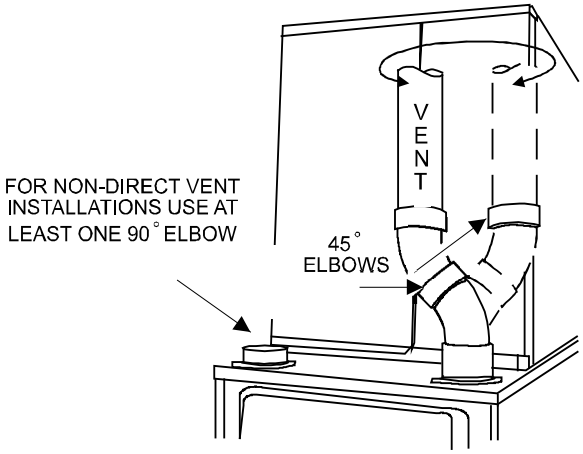

Increased Clearance Configuration
Figure 6

WARNING

Edges of sheet metal holes may be sharp. Use gloves as a precaution when removing plugs.

Combustion Air Pipe Connection

If the furnace is being installed without a combustion air pipe, a 90° elbow should be used on the combustion air intake to guard against blockage.

On up flow / horizontal models, secure the combustion air intake pipe to the air intake coupling using a rubber coupling supplied with the furnace. The rubber coupling may be omitted by inverting the intake coupling and gluing pipe directly to it. Piping may also be glued to the intake coupling in its original position by using a plastic coupling.

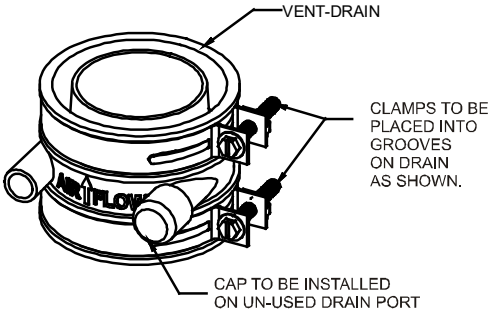

Figure 7

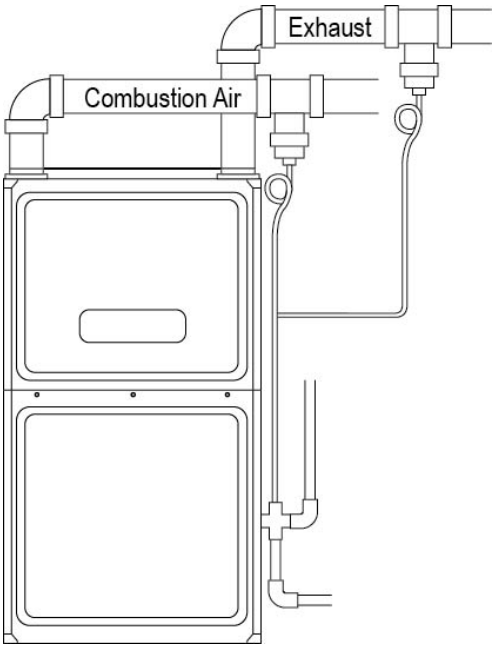

Figure 8

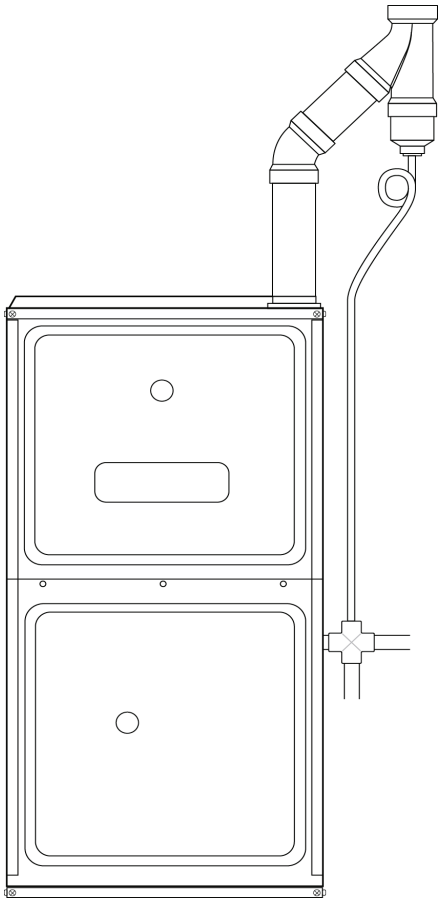

Figure 9

Vent & Intake Options for Condensate Management

The RF000142 coupling (Figure 7) can be secured directly to the furnace intake and/or vent piping if condensation is a concern. If the RF000142 is used on the combustion air inlet, it must be installed with the arrow pointing up. It should be noted, the combustion air will actually be moving in a direction opposite of the arrow on the RF000142 coupling. It must have a field supplied, trapped drain tube free-draining to proper condensate disposal location. A loop in the drain tube can serve as a trap. The unused RF000142 drain fitting should be capped. A field supplied tee installed in the vent and/or intake pipe is also an acceptable method of capturing condensation. For vertical vent piping, a PVC wye can be used for capturing condensation (see figure 9). Any of these options must have a field supplied, trapped drain tube or pipe, free-draining to proper condensate disposal location. A loop in the drain tube can serve as a trap.

Alternate Vent & Intake Pipe Connections (Upflow/Horizontal Models Only)

When installing a furnace horizontally with the left side down, alternate flue and combustion air pipe connections may be used. This method allows the flue and combustion air piping to be run vertically through the side of the furnace (facing up in horizontal left). The alternate vent location is the 3” hole directly in line with the induced draft blower outlet.

When using the horizontal alternate vent configuration, you must use the RF000142 vent drain kit. See Figures 10 & 11 & follow steps below.

NOTE: In the horizontal left installation position, a means of condensate collection must be provided to keep vent pipe condensate from entering the draft inducer housing. If the vent drain elbow is eliminated from the installation, the RF000142 kit must be used.

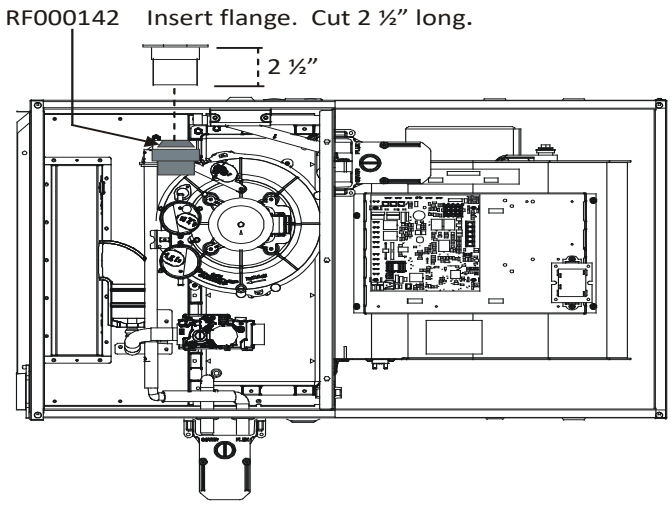

Figure 10

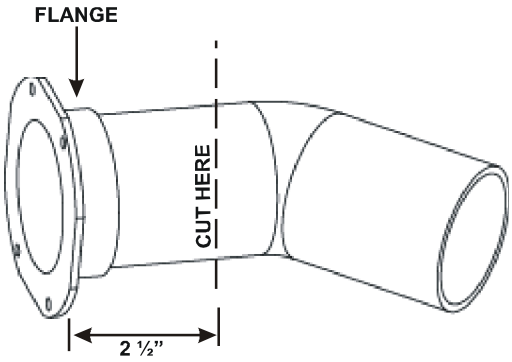

Vent/Flue Pipe Cuts
Figure 11

WARNING

The rubber elbow is not designed to support a load. When the rubber elbow is mounted externally to the furnace cabinet, extreme care must be taken to adequately support field-supplied vent/flue piping, as damage can result in leaks causing bodily injury or death due to exposure to flue gas-es, including carbon monoxide.

CAUTION

Be sure not to damage internal wiring or other components when reinstalling coupling and screws.

1. Remove the four screws from the vent pipe flange on top the furnace.
2. Remove the internal elbow, vent pipe and gasket.
3. Cut the internal vent pipe 2 ½” from the flange. Discard the un-flanged section.
4. Remove the 3” plastic plug (in line with the inducer outlet) and insert it in the space vacated by removal of the internal vent pipe.
5. Install the RF000142 drain coupling with arrow facing up, on the draft inducer outlet.
6. Insert the 2 ½” flanged section of pipe with gasket through the 3” hole and connect to RF000142 drain coupling. Secure it with gear clamp provided.
7. Use the four self-tapping screws removed in step 1 to secure flange to cabinet.
8. Connect drain hose to the uncapped port on the RF000142 coupling, refer to page 19, Section entitled “Horizontal Installation with Left Side Down - Alternate” for drain connection details.

When using the alternate venting location, either in a horizontal left side down installation or a vertical installation using down – venting, the alternate combustion air opening can be used. A locating dimple is located on the right side of the furnace cabinet. The locating dimple is 1-⅞” measured from the front edge of the cabinet in line with the knock out. To use the alternate combustion air location:

1. Remove screws and combustion air flange and gasket from cabinet.
2. Insert the 3” cabinet plug from the drain bag assembly in the unused combustion air hole.
3. Drill a pilot hole at the cabinet dimple (size dictated by knockout tool used).
4. Use a knockout tool to create a 3” diameter hole.
5. Secure the combustion air flange and gasket to the furnace cabinet using the self-tapping screws removed in step 1.

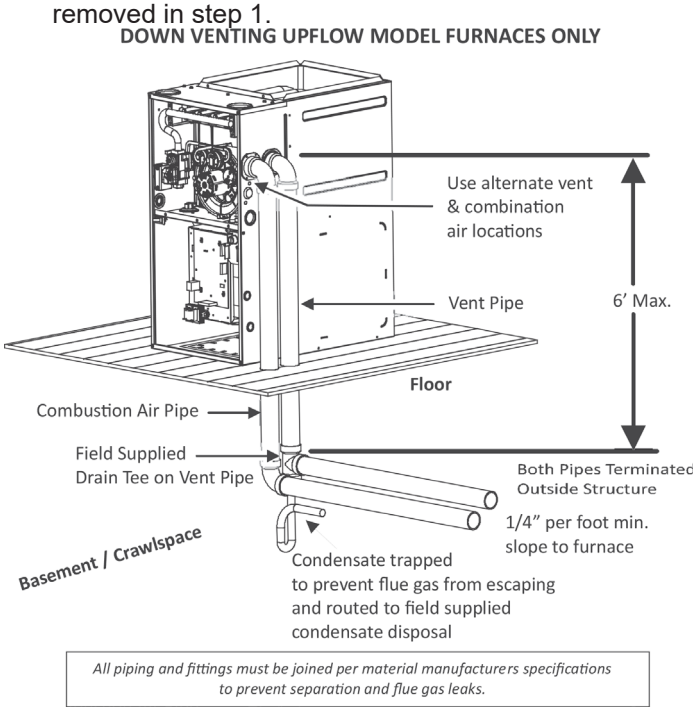

Figure 12

Downflow / Horizontal Models Only

For Downflow models, see Figure 13 & follow the steps below for using the alternate vent location.

1. Remove the four screws from the vent pipe flange on top of the furnace.
2. Remove the two screws from the blower deck holding the flue elbow as well as the clamp hose holding it to the internal vent pipe.
3. Remove the internal elbow, and internal vent pipe with gasket.
4. Remove the 3” plastic plug from the furnace wrapper (in line with the inducer outlet).

1. Seal up the unused vent hole on the top panel and the unused vent hole on the blower deck from the burner cabinet side. These holes should be sealed up using sheet metal squares and then metallic tape. Please make sure to seal up the openings really well.
2. Install the RF000142 drain coupling on the draft inducer outlet with the arrow facing away from the inducer outlet. Secure it with the gear clamp provided.
3. Measure and cut the internal vent pipe so that the gasket and flange side of the pipe are flush with the furnace side wrapper when the pipe is inserted into the RF000142 drain coupling. Discard the un-flanged cut section.

a. B Cabinet: Pipe would need to be about 3.75” long from the flange.

b. C Cabinet: Pipe would need to be about 7” long from the flange.
c. D Cabinet: Pipe would need to be about 11” long from the flange.

4. Insert the flanged section of pipe with gasket through the 3” hole and connect to RF000142 drain coupling. Secure it with gear clamp provided.
5. Use the four self-tapping screws removed in step 1 to secure flange to cabinet.
6. Connect drain hose to the uncapped port on the RF000142 coupling, refer to page 24, section entitled “CounterFlow Models Installed Horizontally with Left Side Down – Alternate” for drain connection details.

The alternate vent location may also be used when installing the downflow furnace in the vertical orientation using either vertical venting or down venting. When using the alternate vent location, you must use the RF000142 vent drain kit. When installing in this configuration, please follow the steps from the paragraph above to remove the internal vent pipe in order to utilize the alternate vent location.

When using the alternate venting location, either in a horizontal left side down installation or a vertical installation, an alternate combustion air opening can be used. The flat area located underneath the alternate vent hole on the right side of the furnace wrapper may be used as an alternate combustion air opening.
To use the alternate combustion air location:

1. Remove the 4 screws holding the internal combustion air pipe from the cabinet. Remove the internal combustion air pipe.
2. Remove the 4 screws holding the combustion air flange & gasket from the blower deck.
3. Insert the 3” cabinet plug that was removed from the alternate vent hole into the blower deck hole from the burner cabinet side. Seal up the rest of the unused combustion air holes using sheet metal squares and then metallic tape. Please make sure to seal up the openings really well.
4. Drill a pilot hole in the area below the vent hole (size dictated by knockout tool used).
5. Use a knockout tool to create a 3” diameter hole.
6. Secure the combustion air flange & gasket to the outside of the furnace cabinet using the self-tapping screws removed in step 1.

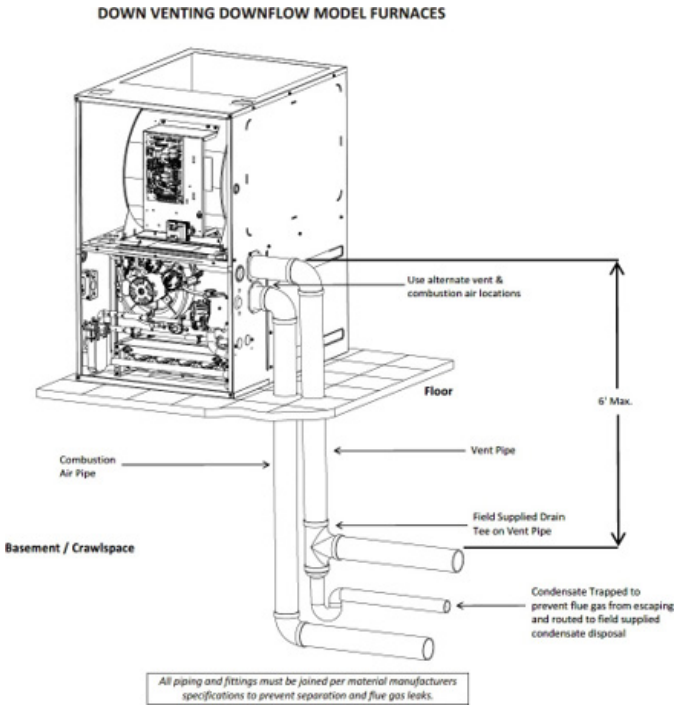

Figure 13

Pipe Termination

Products of combustion must always be vented outside. A vent pipe must never terminate in an attic, crawl space, or any other part of a dwelling. Follow the vent pipe & intake pipe termination requirements listed below as well as all applicable local, State and National codes.

All terminations (vent and/or intake) must be located at least 12” above ground level or the anticipated snow level.

All vent terminations (non-direct and direct vent) must terminate at least 3 feet above any forced air inlet located within 10 feet.

The vent termination of a non-direct vent application must terminate at least 4 feet below, 4 feet horizontally from, or 1 foot above any door, window, or gravity air inlet into any building.

The vent termination of a direct vent application must terminate at least 12” from any opening through which flue gases may enter a building (door, window, or gravity air inlet).

The vent termination of vent pipe run vertically through a roof must terminate at least 12” above the roof line (or the anticipated snow level) and be at least 12” from any vertical wall (including any anticipated snow build up).

A vent termination shall not terminate over public walkways or over an area where condensate or vapor could create a nuisance or hazard or could be detrimental to the operation of regulators, relief valves, or other equipment.

The combustion air intake termination of a direct vent application should not terminate in an area which is frequently dusty or dirty.

Vent & combustion air pipes may terminate vertically through a roof, or horizontally through an outside wall. The combustion air intake and vent pipe can be terminated in two different pressure zones. The intake vent can terminate on one side of the building, while the flue vent can be terminated on another side of the building or through the roof. In addition, the combustion air intake can be terminated in a sufficiently ventilated attic. Vertical vent pipe terminations should be as shown in Figure 16. The penetration of pipes through the roof must be sealed water tight with proper flashing such as is used with a plastic plumbing vent.
Horizontal vent pipe terminations should be as shown in the following figures. To secure the pipe passing through the wall and prohibit damage to piping connections, a coupling should be installed on either side of the wall and solvent cemented to a length of pipe connecting the two couplings. The length of pipe should be the wall thickness plus the depth of the socket fittings to be installed on the inside and outside of the wall. The wall penetration should be sealed with silicone caulking material.

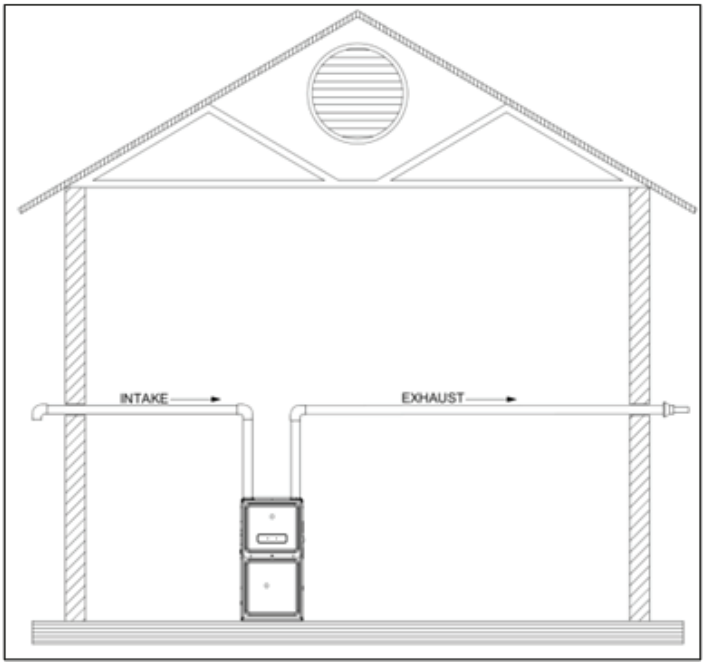

Figure 14A

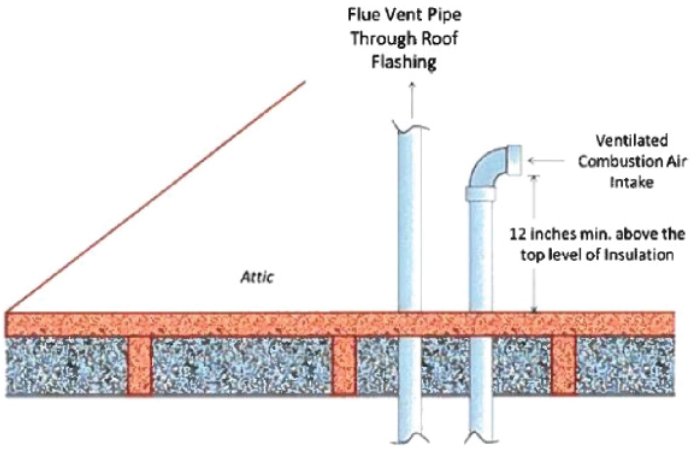

Exhaust Flue and Ventilated Combustion Air Vent Terminations

Figure 14B

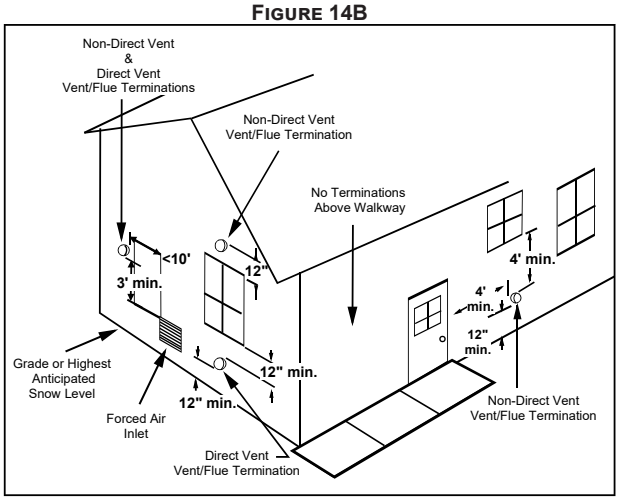

Vent Termination Clearances

Figure 15

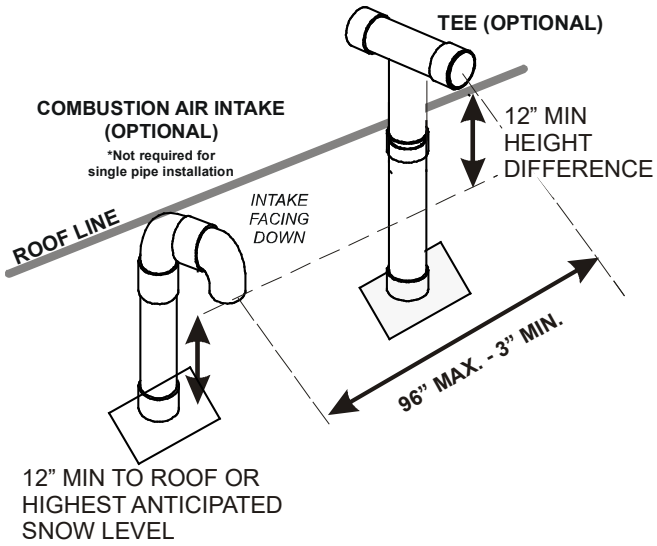

Vertical Termination

Figure 16

VENT PIPE TERMINATION OPTIONS

Figure 17

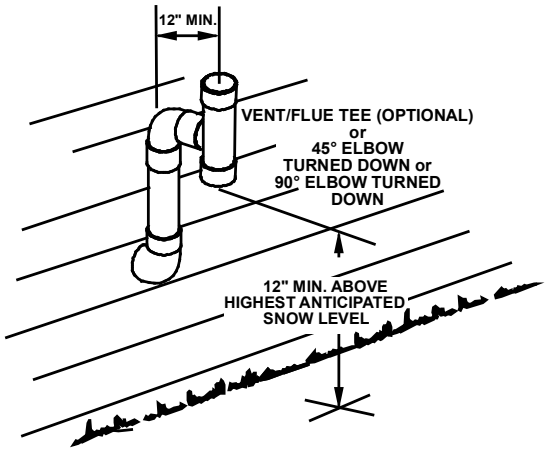

Horizontal Termination (Single Pipe)
Above Highest Anticipated Snow Level
Figure 18

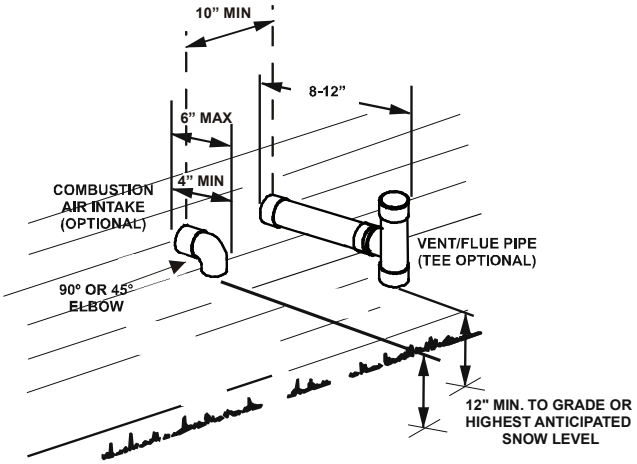

Standard Horizontal Terminations (Dual Pipe)
Figure 19

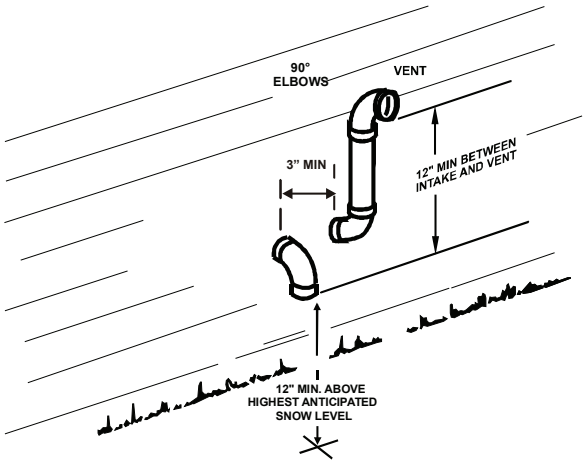

Alternate Horizontal Vent Termination (Dual Pipe)
Figure 20

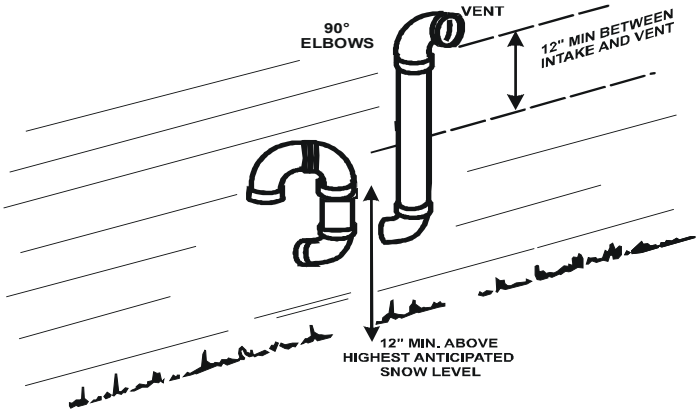

Combustion Air Intake may also be snorkeled to obtain 12" min ground clearance.
Alternate Vent Termination Above Anticipated Snow Level (Dual Pipe)
Figure 21

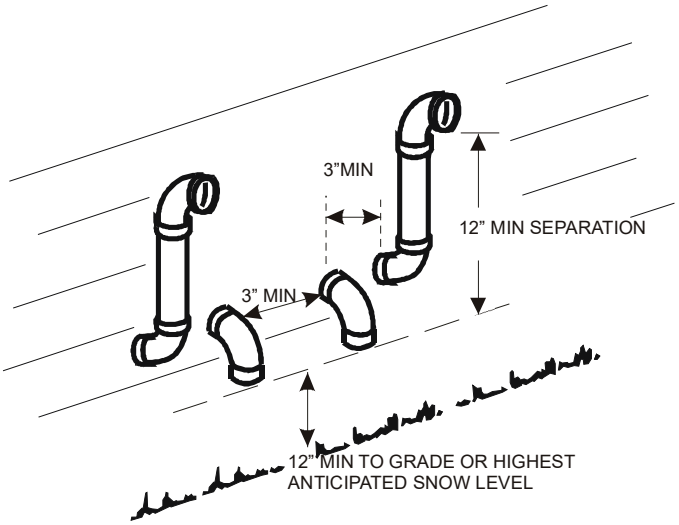

Termination of Multiple Direct Vent Furnaces
Figure 22

Vent/Intake Terminations For Installation of Multiple Direct Vent Furnaces

If more than one direct vent furnace is to be installed vertically through a common roof top, maintain the same minimum clearances between the exhaust vent and air intake terminations of adjacent units as with the exhaust vent and air intake terminations of a single unit.

If more than one direct vent furnace is to be installed horizontally through a common side wall, maintain the clearances as in the following figure. Always terminate all exhaust vent outlets at the same elevation and always terminate all air intakes at the same elevation.

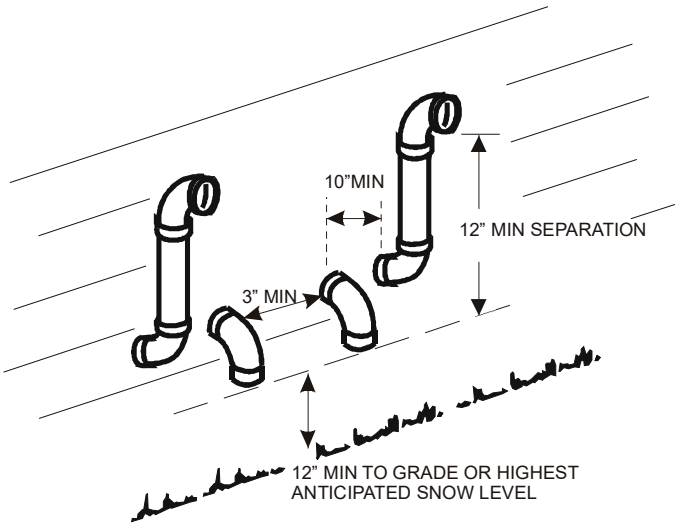

Termination of Multiple Direct Vent Furnaces
Figure 23

Concentric Vent Termination

Refer to the directions provided with the Concentric Vent Kit or IO-619 for installation specifications.

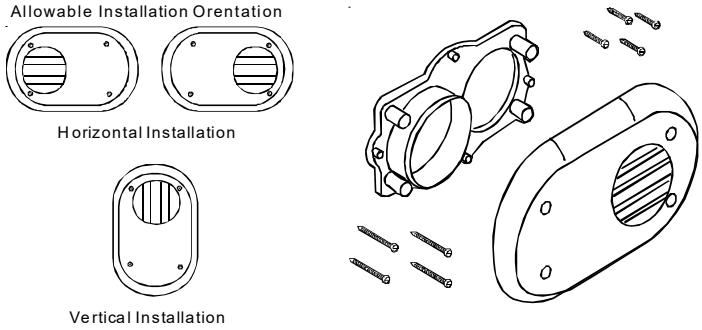

Side Wall Vent Kit
Figure 24

Side Wall Vent Kit

This kit is to be used with 2" or 3" direct vent systems. The vent kit must terminate outside the structure and may be installed with the intake and exhaust pipes located side-by-side or with one pipe above the other. These kits are NOT intended for use with single pipe (non-direct vent) installations.

NOTE: Refer to the directions furnished with the Side Wall Vent Kit (p/n 0170K00000S or 0170K00001S) for installation specifications.

CONDENSATE DRAIN LINES & DRAIN TRAP

A condensing gas furnace achieves its high level of efficiency by extracting heat from the products of combustion to the point where condensation takes place. The condensate must be collected in the furnace drain trap and routed to an appropriate drain location in compliance with local and national codes.

Follow the bullets listed below when installing the drain system. Refer to the following sections for specific details concerning furnace drain trap installation and drain hose hook ups.

- The drain trap supplied with the furnace must be used.
- The drain trap must be primed at time of installation.
- The drain line between furnace and drain location must meet local and nation codes.
- The drain line between furnace and drain location must maintain a ¼" per foot downward slope toward the drain.
- Do not trap the drain line in any other location than at the drain trap supplied with the furnace.
- If the drain line is routed through an area which may see temperatures near or below freezing, precautions must be taken to prevent condensate from freezing within the drain line.
- If an air conditioning coil is installed with the furnace, a common drain may be used. An open tee must be installed in the drain line, near the cooling coil, to relieve positive air pressure from the coil's plenum. This is necessary to prohibit any interference with the function of the furnace's drain trap.

NOTE: In vertical installations, air conditioning coil condensate may drain into the furnace trap as long as there is a trap between the coil and the furnace trap and the drain pipe is not terminating below the water level of the furnace trap.

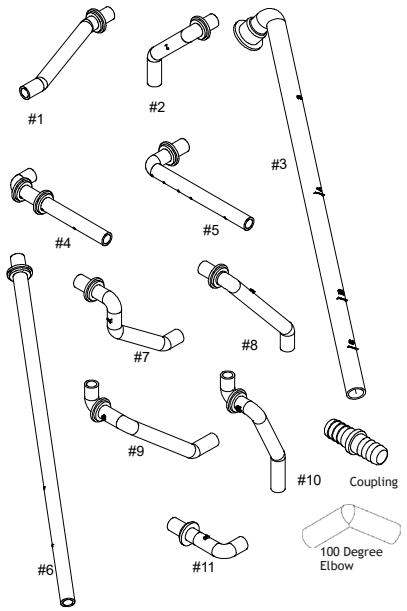

Figure 25

NOTE: Drain components shown for information purposes only. For horizontal installations, a Horizontal Drain Kit may be needed. Refer to the Specifications Sheet for kit part number.

General Drain Information

All furnace models come with a factory installed drain trap. For vertical installations, the trap will remain in the factory position. All furnace models installed horizontally require the trap to be relocated. Many drain hoses have a built-in grommet which will provide a cabinet seal when installed. See instructions below for your model and installation position.

NOTE: Both sides of the drain trap must be primed prior to initial furnace start up.

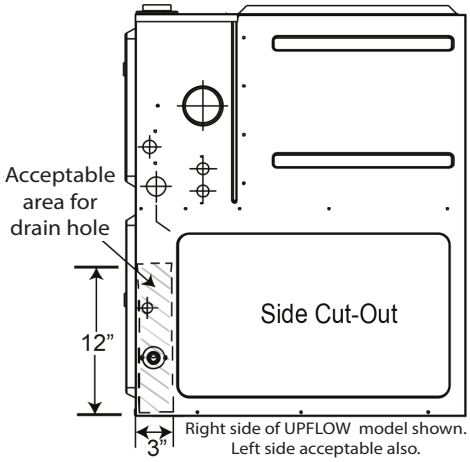

Figure 26

Field Supplied Drain

Drain the furnace and air conditioning coil if applicable, in compliance with code requirements. In horizontal installations, a field installed rubber coupling will allow the drain trap to be removed for cleaning. The drain trap must be primed before initial furnace start up. When an air conditioning coil drain is connected to the field supplied furnace drain, it must be vented. An open tee must be installed at a height no higher than the bottom of the furnace collector box to prevent air conditioning condensate from backing up into the furnace, if the common drain was blocked.

Upflow Models

Upflow Model Installed Vertically

The trap and factory installed hoses remain as shipped. The furnace drain may exit either the right or left side of the furnace cabinet. Both sides of the cabinet have two .875” diameter holes which can be used interchangeably for drain and low voltage wiring purposes. If a higher drain exit is needed, a .875” diameter hole may be added in the area shown in Figure 26. Any unused cabinet opening must be sealed. Do not allow drain hose to sag or trap water.

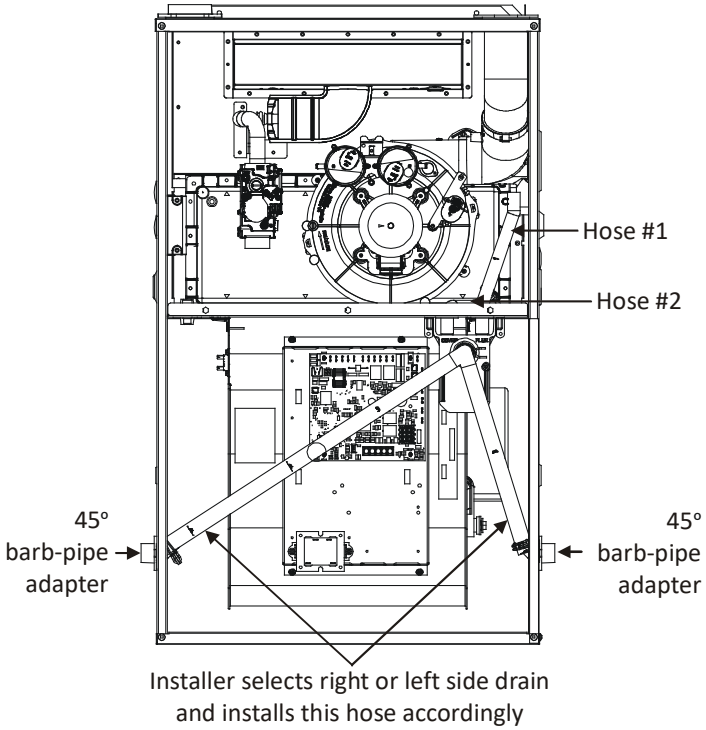

Figure 27

Drain Exiting Right Side

1. Locate and Install the 45º pipe/hose drain coupling from the outside of the cabinet (barbed end goes in the cabinet) through hole in the right side of the cabinet and secure with two field supplied #8 self-tapping screws (See Figure 27).
2. Locate the long drain hose #3 and cut at line “A”.
3. Install large end of hose #3 to trap outlet and secure with 1.25” clamp.
4. Install smaller end of hose #3 on 45º elbow and secure with 1” clamp.
5. Refer to Field Supplied Drain section for instructions on field supplied/installed drain on outlet of furnace trap.

Drain Exiting Left Side

1. Install the 45º pipe/hose drain coupling from the outside of the cabinet (barbed end goes in the cabinet) through the hole in the left side of the cabinet and secure with two field supplied #8 self-tapping screws (see Figure 27).
2. Locate the long drain hose #3 and cut at “B” line for a 17.5” cabinet; cut at line “C” for a 21” cabinet; do not cut for a “D” width cabinet.
3. Install large end of hose #3 to trap outlet and secure with 1.25” clamp.
4. Install smaller end of hose #3 on 45º elbow and secure with 1” clamp.
5. Refer to Field Supplied Drain section for instructions on field supplied/installed drain on outlet of furnace trap.

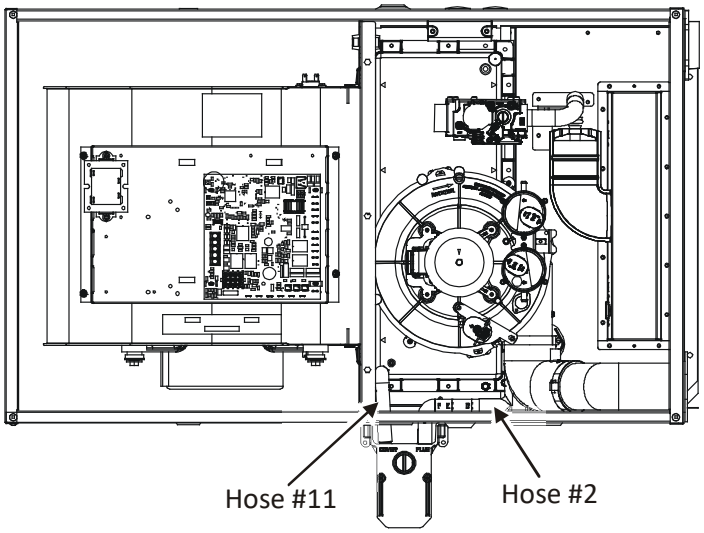

Figure 28

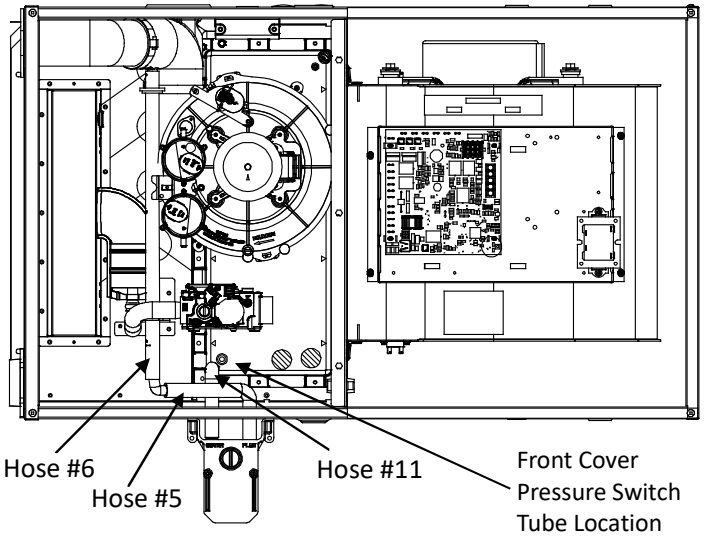

Figure 29

NOTE: Horizontal Drain Kit 0270F05404 needed for horizontal installations.

Horizontal Installation with Right Side Down

Minimum 5 ½" clearance is required for the drain trap beneath the furnace.

1. Remove the clamps from both ends of the drain hoses.
2. Remove the two screws holding the drain trap to the blower deck.
3. Remove the trap and two hoses from the blower deck
4. Remove the two plugs from the right side of the cabinet and install them in the blower deck.
5. Draining the Vent Elbow: Locate hose #2 (factory installed) and cut 1" away from the 45º bend, discard the 45º section. Insert hose #2 from outside the cabinet through the cabinet drain hole nearest the top, secure it to the barbed fitting in the elbow with a red clamp.
6. Draining the Collector Box: Install the non-grommet end of hose #11 from outside the cabinet in the bottom drain hole. Install on collector box and secure with a silver clamp.
7. Use two silver clamps and secure the hoses to drain trap. The trap outlet faces the front of the furnace. Secure the trap to the cabinet using two screws removed in step 2 by inserting the two screws through the large set of holes in the top mounting tabs of the trap into the two predrilled holes in the side of the cabinet.
8. Refer to Field Supplied Drain section for instructions on field supplied/installed drain on outlet of furnace trap.

Horizontal Installation with Left Side Down

Minimum 5 ½" clearance is required for the drain trap beneath the furnace.

**See Front Cover Pressure Switch Tube Location on Figure 29.*

1. Remove the clamps from the two drain tubes on the trap.
2. Remove the two screws holding the drain trap to the blower deck.
3. Remove the trap and hoses from the blower deck.
4. Remove the two plugs from the left side of the cabinet and install them in the blower deck.
5. Draining the Vent Elbow: Locate hose #6. Measuring from the non-grommet end; cut off and discard 1 ½" for a "D" width cabinet, 5" for a "C" width cabinet, 8 ½" for a "B" width cabinet.
6. Remove the rubber plug from vent – drain elbow side port. Place hose #6 on the vent – drain elbow side port and secure with a silver clamp.
7. Unused vent-drain elbow drip leg port must be sealed to prevent flue gases from escaping. Insert the rubber plug removed in step 6 into the unused elbow drain port. Inserting a blunt tool such as a 3/16'' Allen wrench into the center of the rubber plug will stretch the plug and allow complete insertion.
8. Locate hose #5 and cut 3" from the non-grommet end. Discard the section without the grommet.
9. Insert the cut end of tube #5 through the lower cabinet drain hole.
10. Connect hose #6 & hose #5 using 100º elbow and secure with two red clamps
11. Draining the Collector Box: Remove cap from left side collector box drain port (bottom in horizontal left position) and install it on right side (top) collector box drain port.
12. Install the non-grommet end of hose #11 from outside the cabinet in the upper drain hole. Install on collector box and secure with a silver clamp.
13. Use two silver clamps and secure the hoses to drain

trap. The trap outlet faces the front of the furnace. Secure the trap to the cabinet using two screws removed in step 2 by inserting the two screws through the large set of holes in the top mounting tabs of the trap into the two pre-drilled holes in the side of the cabinet.

14. Refer to Field Supplied Drain section for instructions on field supplied/installed drain on outlet of furnace trap.

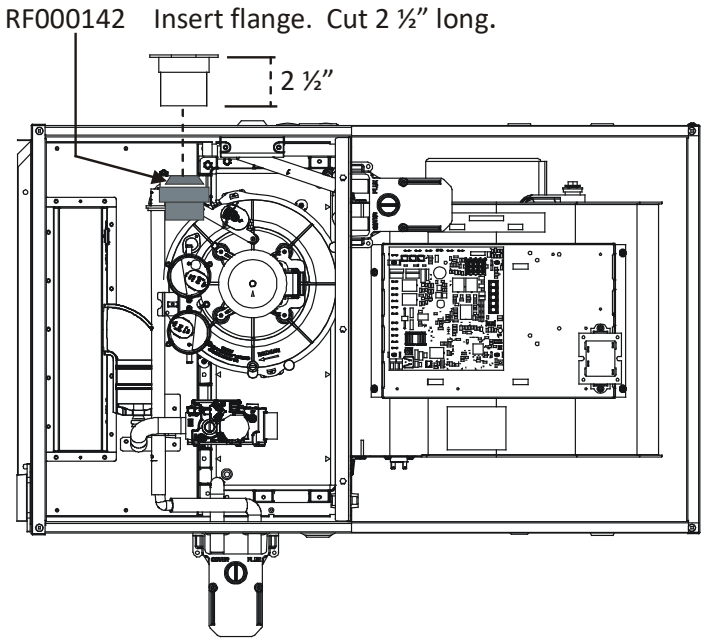

Figure 30

Horizontal Installation with Left Side Down - Alternate

**See Front Cover Pressure Switch Tube Location on Figure 30.*

1. Draining the RF000142 Coupling: Locate hose #2 (factory installed). Cut off and discard the 45° radius end.
2. Install 90°radius end of hose #2 on RF000142 drain outlet and secure with a red clamp.
3. Insert coupling in hose #2 and secure with a red clamp.
4. Locate hose #5 and cut 3" from the non-grommet end. Discard the section without the grommet.
5. Insert the cut end of tube #5 through the lower cabinet drain hole.
6. Insert 100° elbow in the cut end of hose #5.
7. Locate hose #6. Using red clamps, connect between the coupling and 100° elbow, cutting off excess tubing.
8. Draining the Collector Box: Remove cap from left side collector box drain port (bottom in horizontal left position) and install it on right side (top) collector box drain port and secure with a red clamp.
9. Install the non-grommet end of hose #11 from outside the cabinet in the upper drain hole. Install on collector box and secure with a silver clamp.
10. Use two silver clamps and secure the hoses to drain trap. The trap outlet faces the front of the furnace. Secure the trap to the cabinet using two screws removed in step 2 by inserting the two screws through the large set of holes in the top mounting tabs of the trap.

Downflow Models

Downflow Model Installed Vertically

The furnace drain may exit the right or left side of the furnace cabinet (left side preferred) Trap and factory installed hoses remain as shipped if the drain will exit the left side of the cabinet. Draining from the right side requires relocation of the trap to outside the cabinet.

Drain Exiting Left Side

1. Install a field supplied rubber coupling secured with a 1 1/4" clamp to enable removing the trap for future cleaning. Alternately, a PVC fitting may be glued on the trap outlet.
2. Install drain per local and National codes.

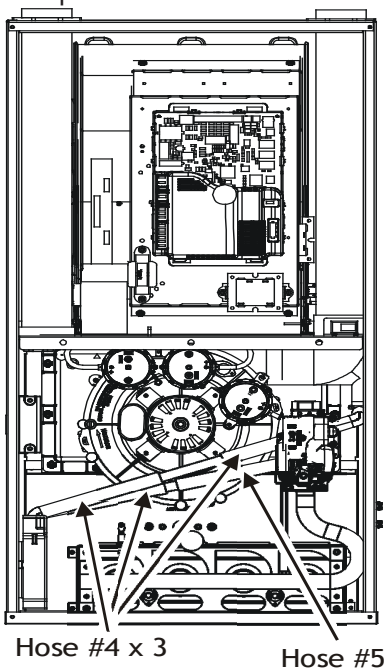

Non-ULN furnace shown (ULN similar)
Figure 31

Drain Exiting Right Side

1. Removing the gas manifold assembly will provide better access when re-locating the trap. To remove the gas manifold, remove the four screws that fasten the gas manifold assembly to the bracket.
2. Remove hose clamps and hoses from trap.
3. Remove trap.
4. (Draining the Vent Elbow) Insert the non-grommet end hose #10 into the cabinet back drain hole. Insert a coupling into the drip leg of the vent-drain elbow and secure with a silver clamp. Secure hose #10 on vent - drain elbow barb fitting with a silver clamp.
5. (Draining the Collector Box) Insert non-grommet end of hose #9 into the cabinet front drain hole and

secure on collector box drain port with a silver clamp.

6. Mate the drain trap inlets to the hoses and secure with silver clamps.
7. Line up the trap mounting holes with the pre-drilled holes in the furnace and secure with 2 screws removed in step 2.
8. Refer to Field Supplied Drain section for instructions on field supplied / installed drain on outlet of furnace trap.

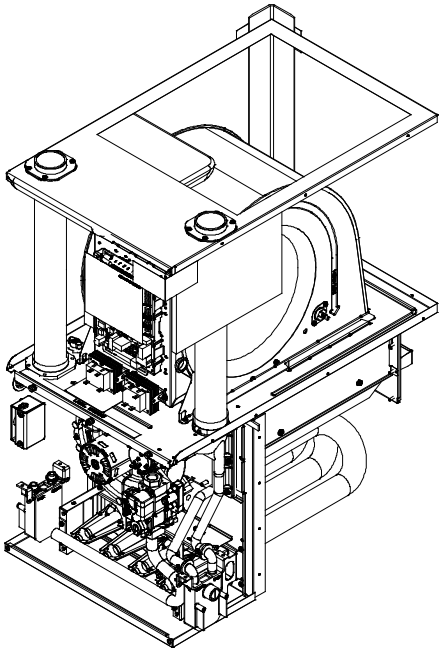

Non-ULN furnace shown (ULN similar)
Figure 32

Downflow Model Installed Horizontally with Right Side Down

Minimum 5 1/2" clearance is required for the drain trap beneath the furnace.

NOTE: For horizontal installations, some of the required hoses are found in the factory-installed hose assemblies. Remove the hose clamps to obtain the respective hoses needed for installation, and install per the following directions.

1. Remove the drain trap and factory installed drain tube assemblies.
2. Remove two 1'' plugs from right side of cabinet.
3. (Draining the Collector Box) From outside the cabinet, insert the non-grommet end hose #7 into the back drain hole and secure to collector box drain port using a silver clamp.
4. (Draining the Vent Elbow) Insert the straight barbed coupling into the vent - drain elbow drip leg and secure with a red clamp.

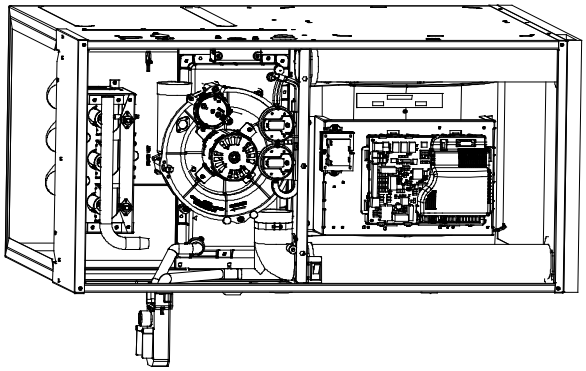

Non-ULN furnace shown (ULN similar)
Figure 33

5. From outside the cabinet, insert the non-grommet end of hose #8 into the front cabinet drain hole and secure on the vent - drain elbow barb fitting using a red clamp.
6. Place the drain hoses on the trap inlets and secure with silver clamps. The outlet of the trap must face the original bottom of furnace.
7. Using the two sheet metal screws provided in the cabinet, secure the trap to the furnace.
8. Refer to Field Supplied Drain section for instructions on field supplied/installed drain on outlet of furnace trap.

Downflow Model Installed Horizontally with Left Side Down

Minimum 5 1/2" clearance is required for the drain trap beneath the furnace.

*Also see Front Cover Pressure Switch Tube Location on page 9.

1. Remove the factory installed drain trap and hose assemblies. Leave the 100° elbow inserted and clamped in the vent-drain elbow.
2. Remove two 1"plugs from left side of cabinet
3. (Draining the Collector Box) Remove the cap from the left side of the collector box drain port (bottom in horizontal left position) and install it on right side drain port.
4. Place radius end of hose #4 (factory installed) on the collector box drain port and secure with a silver clamp.
5. Insert hose #2 from outside the cabinet in the front drain hole.
6. Connect hose #4 & hose #2 together using a straight barbed coupling and two gold clamps (factory installed).
7. (Draining the Vent Elbow) Remove rubber plug from vent – drain elbow side port.
8. **The unused vent-drain elbow drip leg port must be plugged to prevent flue gases from escaping.** Insert rubber plug removed in step 7 into the 100° elbow. (Inserting a blunt tool such as a 3/16'' Allen wrench into the center of the rubber plug will stretch the plug and allow complete insertion)

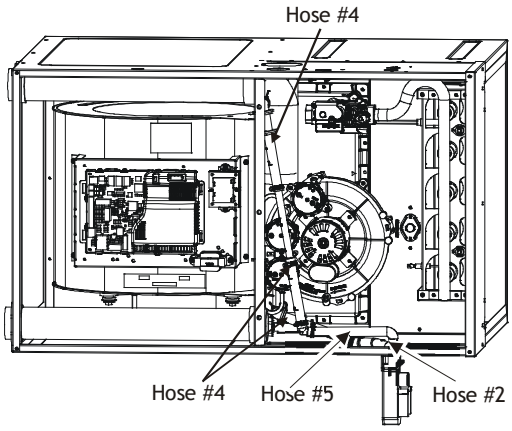

Non-ULN furnace shown (ULN similar)
Figure 34

9. Place radius end of hose #4 on the side port of vent – drain elbow and secure with a gold clamp.
10. Insert a ½" diameter PVC pipe (factory installed) into hose #4 and secure with a gold clamp.
11. Insert the non-grommet end of hose #5 (factory installed) from outside the cabinet in the back drain hole.
12. Insert 100º elbow in hose #5 and secure with a red clamp.
13. Locate hose #4 and cut a cut off a 4" straight section and discard the radius end.
14. Connect the 4" straight section of hose #4 to the 100º elbow and the PVC pipe and secure with red clamps.
15. Connect the hoses to the trap inlets and secure with silver clamps, drain trap outlet must point to the original bottom of the furnace.
16. Using the two sheet metal screws provided in the cabinet, secure the trap to the furnace.
17. Refer to Field Supplied Drain section for instructions on field supplied / installed drain on outlet of furnace trap.

ELECTRICAL CONNECTIONS

WARNING

Edges of sheet metal holes may be sharp. Use gloves as a precaution when removing hole plugs.

Wiring Harness

The wiring harness is an integral part of this furnace. Wires are color coded for identification purposes. Refer to the wiring diagram for wire routings. If any of the original wire as supplied with the furnace must be replaced, it must be replaced with wiring material having a temperature rating of at least 105°C. Any replacement wiring must be a copper conductor.

120 Volt Line Connections

Before proceeding with electrical connections, ensure that the supply voltage, frequency, and phase correspond to that specified on the unit rating plate. Power supply to the furnace must be NEC Class 1, and must comply with all applicable codes. The furnace must be electrically grounded in accordance with local codes or, in their absence, with the latest edition of The National Electric Code, ANSI NFPA 70.

Use a separate fused branch electrical circuit containing properly sized wire, and fuse or circuit breaker. The fuse or circuit breaker must be sized in accordance with the maximum overcurrent protection specified on the unit rating plate. An electrical disconnect must be provided at the furnace location.

Connect hot, neutral, and ground wires as shown in the wiring diagram located on the unit's blower door. Metal conduit is not considered a substitute for an actual ground wire to the unit. For direct vent applications, the cabinet opening to the junction box must be sealed air tight using either an UL approved bushing such as Heyco Liquid Tight or by applying non-reactive UL approved sealant to bushing.

Line polarity must be observed when making field connections. Line voltage connections can be made through either the right or left side panel. The furnace is shipped configured for a left side electrical connection with the junction box located inside the burner compartment. To make electrical connections through the opposite side of the furnace, the junction box must be relocated to the other side of the burner compartment prior to making electrical connections. To relocate the junction box, follow the steps shown in the Junction Box Relocation section.

WARNING

High Voltage!
To avoid personal injury or death due to electrical shock, disconnect electrical power before servicing or changing any electrical wiring.

CAUTION

Label all wires prior to disconnection when servicing controls. Wiring errors can cause improper and dangerous operation. Verify proper operation after servicing.

WARNING

High Voltage!
To avoid the risk of injury, electrical shock or death, the furnace must be electrically grounded in accordance with local codes or in their absence, with the latest edition of the National Electric Code.

Junction Box Relocation

Line voltage connections can be made through either the right or left side panel. The furnace is shipped configured for a left side electrical connection. To make electrical connections through the opposite side of the furnace, the junction box must be relocated to the left side prior to making electrical connections. To relocate the junction box, perform the following steps.

1. Remove the burner compartment door.
2. Remove and save the two screws securing the junction box to the side panel.
3. Relocate junction box and associated plugs and grommets to opposite side panel. Secure with screws removed in step 2.

IMPORTANT NOTE: Wire routing must not interfere with circulator blower operation, filter removal or routine maintenance.

To ensure proper unit grounding, the ground wire should run from the furnace ground screw or green ground wire located inside the furnace junction box all the way back to the electrical panel. **NOTE:** Do not use gas piping as an electrical ground. To confirm proper unit grounding, turn off the electrical power and perform the following check.

1. Measure resistance between the neutral (white) connection and any unpainted surface.
2. Resistance should measure 10 ohms or less.

This furnace is equipped with a blower door interlock switch which interrupts unit voltage when the blower door is opened for servicing. Do not defeat this switch.

CoolCloud™ HVAC Phone Application

Actual screens may differ, based on the mobile device.

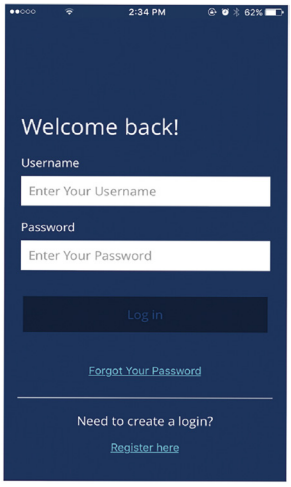

Figure 35

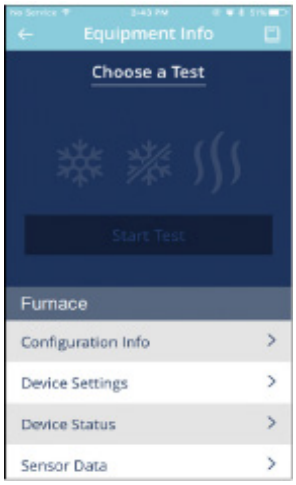

Figure 36

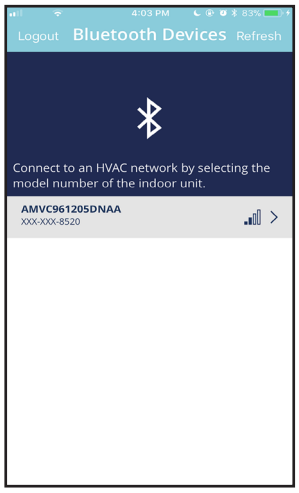

Figure 37

This furnace is Bluetooth ready and functions with the **CoolCloud** HVAC phone application designed to improve the contractor's setup / diagnostic experience. Users can see specific model information, review active diagnostic error codes, observe system status during operation, make system menu adjustments, add site visit notes and run system testing of all operational modes (heat / cool / fan) directly from the phone. The phone application is also capable of instantly updating the furnace software anytime updates are available. The CoolCloud web application will automatically notify the user if updates are available only while connected on local Bluetooth network.

NOTE: The software update may take up to 20 minutes to complete.

Overview

NOTE: When installing a Goodman or Amana® Brand Smart Thermostat, please visit the Goodman website at goodmanmfg.com or Amana Brand website at HTTPS://www.Amana-HAC.com for full instructions on a detailed procedure of the thermostat commissioning process.

NOTE: Only use Goodman or Amana® Brand approved communication thermostats. Approved communication thermostats are Goodman GTST, Amana Brand ATST, Daikin One+ Smart Thermostat, and Daikin Touch Smart Thermostat.

The Goodman or Amana® brand Communicating system is a system that includes a Goodman or Amana® brand Communicating compatible furnace and air conditioner or heat pump with a Communicating thermostat. A valid Goodman or Amana® brand Communicating system could also be a compatible furnace, Communicating thermostat and non-compatible, single stage air conditioner. Any other system configurations are considered invalid Goodman or Amana® brand Communicating systems and must be connected as a traditional (or non-communicating) system (see Electrical Connections for wiring connections).

Goodman or Amana® brand **Communicating Thermostat Wiring**

NOTE: A removable plug connector is provided with the furnace to make thermostat wire connections. This plug may be removed, wire connections made to the plug and replaced. It is strongly recommended that you do not connect more than two wires into a single terminal in the field because there is a risk of the wires becoming loose. Failure to do so may result in intermittent operation.

To wire the system components, it is strongly recommended to use the same type and the same gauge for the wires prepared in the field (for best results use 18 AWG).

Two-Wire Outdoor, Four-Wire Indoor Wiring
Typical Goodman or Amana® brand Communicating wiring will consist of two wires between the indoor unit and outdoor unit and four wires between the indoor unit and thermostat. The required wires are: (a) data lines, 1 and 2; (b) thermostat "R" (24 VAC hot) and "C" (24 VAC common).

In case of coil without electronic expansion valve (EEV)

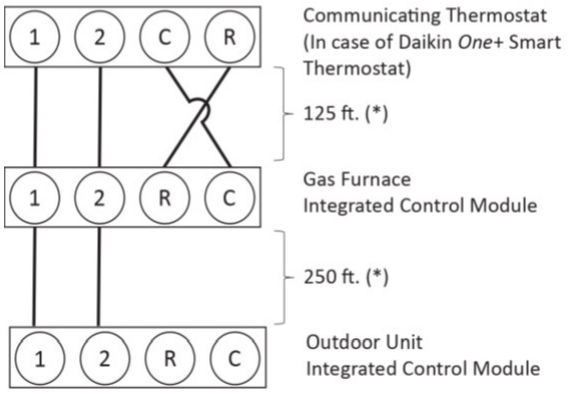

Figure 38

In case of coil with electronic expansion valve (EEV)

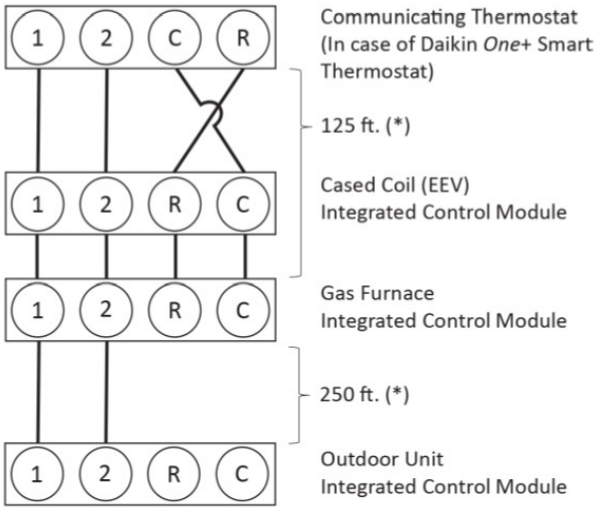

Figure 39

(*) Allowable Maximum Length

System Wiring

Goodman or Amana® brand Communicating Compatible Furnace with Non-Communicating Compatible Single-Stage Air Conditioner.

Four wires are required between the furnace and thermostat. Two wires are required between the furnace control and single stage air conditioner. For this system configuration, the "Y1" terminal on the integrated furnace control becomes an output rather than an input.

NOTE: A 4-position low voltage connector is supplied for communication connections and a 6-position low voltage connector is supplied for non-communicating thermostat types.

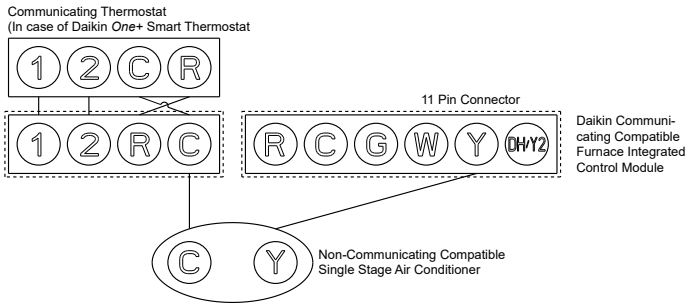

Figure 40

NOTE: The cooling CFM for this installation must be set up using the on-board push buttons or the CoolCloud HVAC application before adding 1-stage non-communicating condenser to the communicating thermostat.

Once all equipment is installed and ready for system startup, ensure power is on to the furnace and the furnace control board is in IdL (Idle). Disconnect the 4-pin connector (1, 2, R, C) from the furnace control board to the communicating thermostat. Use the *CoolCloud* HVAC app and follow the steps.

1. Choose correct indoor unit model.
2. Choose 24v Outdoor.
3. Choose Device Settings.
4. Set Outdoor Unit Type (OdS).
5. Set Outdoor Unit Tonnage (ton).
6. Adjust Cooling Trim Factor (CtF).
7. Change Cooling Airflow Profile (CAP) to desired profile (factory default is D).
8. Change Cooling Airflow On Delay (Cnd) or Off Delay (Cfd) if necessary.
9. Apply Changes and press OK.
10. Reconnect 4-pin connector before proceeding to the next steps.

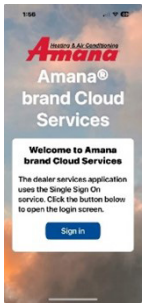

Figure 41

1. Go to Amana brand Cloud Services
2. Click on the tools option.
3. Choose the correct installed thermostat.
4. Choose Cloud Commissioing.
5. Add a job manually or use GPS.
6. Add thermostat.
7. Once populated choose “apply system profile”.
8. The app will autodetect the equipment and populate on the screen – choose furnace.
9. Choose Current Profile.
10. Select 24VAC Condenser, then send to the thermostat.
11. Save as a custom profile or choose No Thanks.

Figure 42

1. Go to Goodman Installer app and sign in.
2. Click on Apply Profile (WiFi must be enabled).
3. Follow the steps to put thermostat in AP mode.
4. Connect the thermostat via WiFi.
5. Once connected to the thermostat, THERMOSTAT should be visible.
6. Return to app.
7. Wait for equipment to autodetect.
8. Choose “apply system profile”.
9. The app will autopopulate the equipment on the screen choose furnace.
10. Choose Current Profile.
11. Select 24VAC Condenser, then send to the thermostat.
12. Save as custom profile or choose No Thanks.

Refer to Amana Technical Service Bulletin TSB A-GN-OT-0071 or Goodman TSB G-GN-OT-0072 for full instructions.

Quick Start Guide For Communicating Outdoor Units

EXTREMELY IMPORTANT: For all cooling calls, the system only requires a single Y input from the thermostat. For all heating calls (including dual fuel applications), the system only requires a single W input from the thermostat. Internal algorithms will control all available cooling and heating stages, including dual fuel operation based on these inputs. Any single-stage 24VAC thermostat is applicable. For proper operation, set up the thermostat to control a single-stage AC outdoor unit and a single-stage gas furnace. The control board does not accommodate an O wire thermostat input (reversing valve signal). If using a heat pump, set up the thermostat, as stated above. Setting the thermostat for the heat pump control or multi-stage control may result in incorrect performance.

1. Connect all necessary thermostat wires to the thermostat connector on the furnace control, as instructed by the applicable wiring diagrams shown in this section.
2. Connect the 1 & 2 wires between the indoor and outdoor unit for communicating operation.
   NOTE: Verify two-stage outdoor units include a 24 VAC transformer (for outdoor control board power). Two-stage outdoor units may not behave appropriately without this 24 VAC transformer.

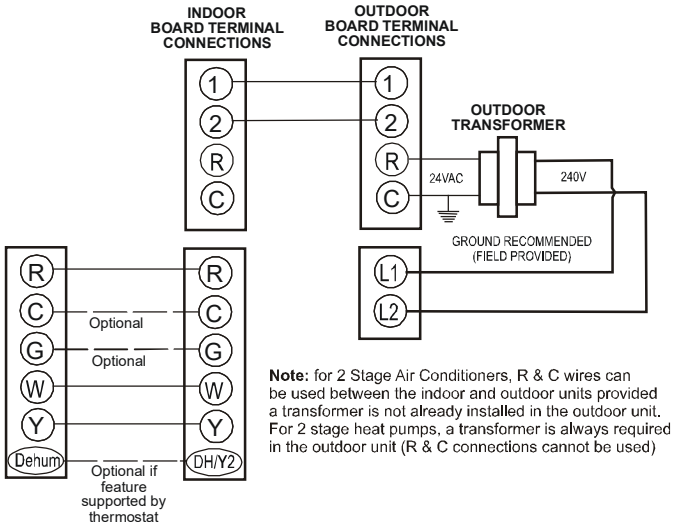

Communicating Two-Stage Air Conditioner or Heat Pump
Figure 43A

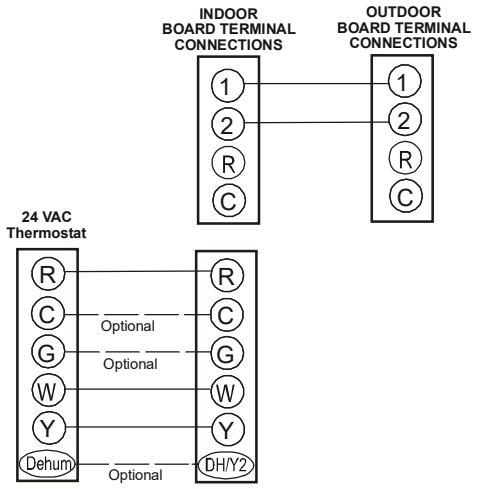

Communicating Inverter Air Conditioner or Heat Pump
Figure 43B

3. Download the **CoolCloud** HVAC phone application for charging and to configure/test system operations.

NOTE: When new versions of Bluetooth Communication Software and Furnace Control Software are available, the phone application notifies the user. Software updates are classified as either optional or mandatory and installed by using the phone application. Ensure installation of all mandatory software updates. Review notes for optional software updates and install if necessary.

NOTE: If an E11 code exists for the inverter system immediately after line voltage is applied (code shown in the CoolCloud HVAC phone application or displayed on the inverter control), the System Verification Test needs to be completed before any other operation. See the following procedure.

1. Allow the system to remain Idle for 5 minutes.
2. Turn the system verification test on either by using the CoolCloud phone application, or by entering the SUt menu through the furnace pushbuttons.
3. Wait for the test to complete.

Charging

1. Inverter units using the **CoolCloud** HVAC phone application or control board push button:
   a. Charge the inverter units by setting the CR9 menu (Charge Mode) to ON through the furnace control board pushbuttons or the CoolCloud HVAC phone application.
   b. The System will remain in charge mode (high speed) for 60 minutes before timing out.
   c. The installer must manually shut off charge mode once complete.
2. Two-stage outdoor units using the **CoolCloud** HVAC application:
   a. Charge the outdoor unit as required using the charging information provided with the outdoor equipment.

Gas Furnace Testing

1. Two-stage Operation using the **CoolCloud** HVAC application:
   a. Select the gas heat icon after entering the furnace menus.
   b. Select any value less than 50% for low stage operation and any value greater than 50% for high stage operation.

2. Confirm thermostat heating and cooling calls function properly with equipment.

Quick Start Guide For Non-Communicating Outdoor Units

When setting up a ComfortBridge™ furnace for use with a non-communicating outdoor unit, the installing contractor must set airflow in the "ton" menu on the PCB or in the CoolCloud HVAC APP. Failure to do so will result in the furnace PCB displaying "1 dL" and the blower not operating with a call for cooling. This condition indicates that the installer MUST set up the airflow, and is not an indication that the control board needs replacement.

EXTREMELY IMPORTANT: For two-stage gas heating, the system only needs a single W input. Internal algorithms will control the staging of the gas furnace automatically based on the single W input. For non-communicating outdoor unit wiring, see instructions below.

1. Use the wiring diagrams below to connect low voltage thermostat wires.

NOTE: When installing the furnace with a non-communicating heat pump wire directly from the "O" terminal on the thermostat to the reversing valve "O" terminal on the non-communicating heat pump.

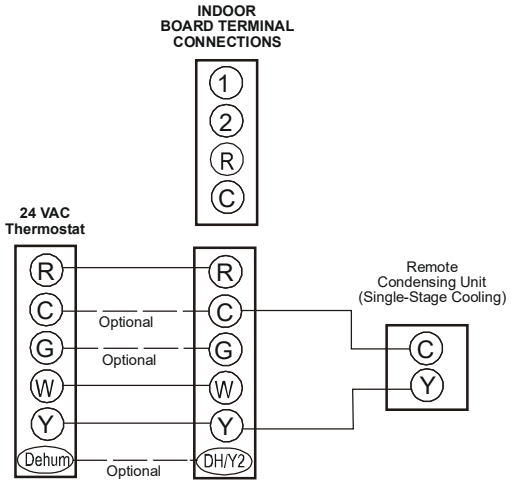

Non-Communicating Single-Stage A/C
Figure 44A

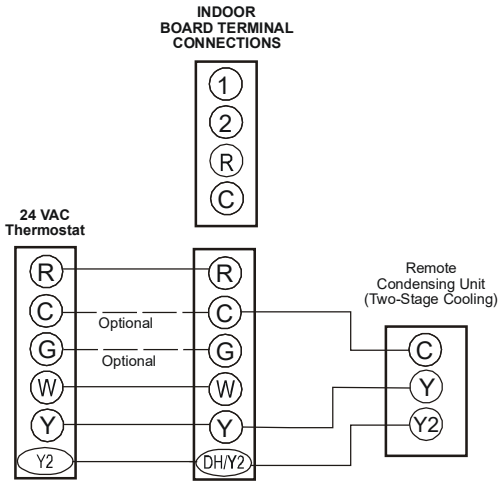

Non-Communicating Two-Stage A/C
Figure 44B

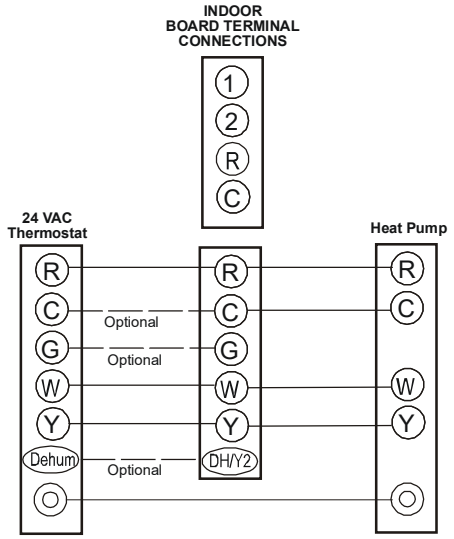

Non-Communicating Single-Stage Heat Pump
Figure 44C

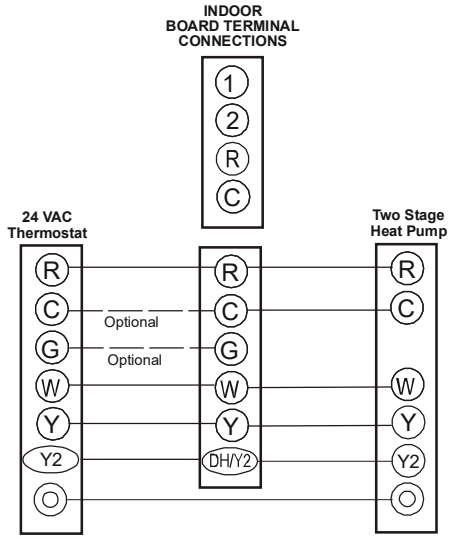

Non-Communicating Two-Stage Heat Pump
Figure 44D

2. Download the **CoolCloud** HVAC phone application.

NOTE: When new versions of Bluetooth Communication Software and Furnace Control Software are available, the phone application notifies the user. Software updates are classified as either optional or mandatory and installed by using the phone application. Install all mandatory software updates. Review notes for optional software updates and install if necessary.

3. Select the Non-Comm Outdoor Setting menu (Od5) using the onboard pushbuttons or the **CoolCloud** HVAC phone application. Select 1 AC for single stage Air Conditioners, 1HP for single stage heat pumps, 2 AC for two-stage air conditioners, and 2 HP for two-stage Heat Pumps.
4. Go to the tonnage units menu (ton) and select the tonnage value that corresponds to the desired airflow for the outdoor unit. See the following table.

NOTE: For two-stage non-communicating outdoor units, the system will stage airflow automatically for low stage operation.

Tonnage Selection	Airflow	Tonnage Selection	Airflow	Tonnage Selection	Airflow	Tonnage Selection	Airflow
1	400	2.3	920	3.6	1440	4.9	1960
1.1	440	2.4	960	3.7	1480	5	2000
1.2	480	2.5	1000	3.8	1520	5.1	2040
1.3	520	2.6	1040	3.9	1560	5.2	2080
1.4	560	2.7	1080	4	1600	5.3	2120
1.5	600	2.8	1120	4.1	1640	5.4	2160
1.6	640	2.9	1160	4.2	1680	5.5	2200
1.7	680	3	1200	4.3	1720	5.6	2240
1.8	720	3.1	1240	4.4	1760	5.7	2280
1.9	760	3.2	1280	4.5	1800	5.8	2320
2	800	3.3	1320	4.6	1840	5.9	2360
2.1	840	3.4	1360	4.7	1880	6	2400
2.2	880	3.5	1400	4.8	1920		

Table 5

NOTE: The system will not provide airflows above the Max Airflow Value.

3 Ton Models = 1,400 CFM
5 Ton Models = 2,200 CFM

5. Use the **CoolCloud** HVAC phone application to configure and test **furnace** operations.

NOTE: The phone application cannot test a non-communicating outdoor unit. Utilize the thermostat for outdoor unit testing.

Gas Furnace Testing

a. Two-stage operation using the **CoolCloud** HVAC application:
   a. Select the gas heat icon after entering the furnace menus.
   b. Select any value less than 50% for low stage operation and any value greater than 50% for high stage operation.

6. Confirm thermostat heating and cooling calls function properly with equipment.

Quick Start Guide for Gas Heat Only Setup (No Outdoor Unit)

EXTREMELY IMPORTANT: The furnace only requires a single W input for 2 stage gas heat control. Internal algorithms will control staging of the gas furnace automatically.

1. Connect all necessary thermostat wires to the thermostat connector on the furnace control, as shown in the following diagram.

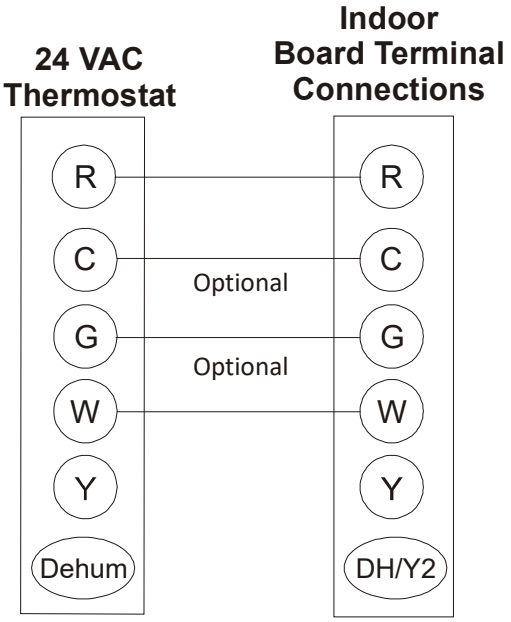

Gas Heat Only
Figure 45

2. Download the **CoolCloud** HVAC phone application and use it to configure and test furnace operations.

NOTE: When new versions of Bluetooth Communication Software and Furnace Control Software are available, the phone application notifies the user. Software updates are classified as either optional or mandatory and installed by using the phone application. Install all mandatory software updates. Review notes for optional software updates and install if necessary.

Gas Furnace Testing

a. Two-stage operation using the **CoolCloud** HVAC application:
   a. Select the gas heat icon after entering the furnace menus.
   b. Select any value less than 50% for low stage operation and any value greater than 50% for high stage operation.

3. Confirm thermostat heating call functions correctly with equipment.

Dehumidification

Control logic allows the furnace's circulating blower to operate at a reduced speed during a combined thermostat call for cooling, and a dehumidification demand. This lower blower speed increases moisture removal as it passes through the indoor coil. The control board includes a 24-volt dehumidification input (DH) on the low-voltage wiring connector. The terminal features dual configuration functionality and can accommodate enabling dehumidification when the input is energized or de-energized. When using an external dehumidistat, connect between the R and DH terminals. If the humidistat closes on humidity rise or the thermostat energizes this terminal when dehumidification is required, set the control board "dHL" (Dehum Logic) menu setting to "HI" using the pushbuttons or **CoolCloud** HVAC phone application. If the humidistat opens on humidity rise or the thermostat de-energizes this terminal when dehumidification is required, set the "dHL" (Dehum Logic) menu to "Lo" using the pushbuttons or **CoolCloud** HVAC phone application.

Auxiliary Alarm Switch

The control is equipped with a 24VAC Aux Alarm, accommodating condensate switch installations. The connection is designated as CONDENSATE IN/OUT on the control board. By default, the connected AUX switch is normally closed and opens when the water level in the evaporator coil base pan reaches an unacceptable level. The control responds by displaying an EEF error code and turning off the outdoor condensing unit. If the AUX switch is detected to be in the closed position for 30 seconds, regular operation resumes and the error message is no longer displayed.

Pushbutton Menu

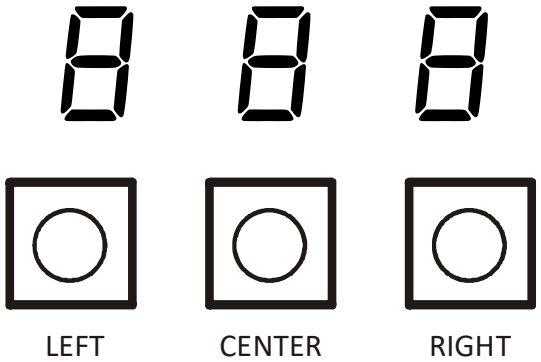

Figure 46

The furnace includes three on-board pushbuttons allowing users to navigate indoor and outdoor system menus. The "RIGHT" and "LEFT" buttons enable the user to scroll through the main menus and to then scroll through available options within specific menus. The "CENTER" button enters the main menu and then permanently selects options within those menus.

NOTE: After scrolling to the desired option within a menu, that option may be flashing on the 7-segment displays. This condition indicates no selection is selected. Pressing the Center button twice chooses the option. The first press stops the flashing, and the second makes the selection official and returns to the main menu.

Accessories

When installing an external humidifier, dehumidifier, or ventilator, it may require airflow setting modification at the HVAC system to function accordingly.

1. Make sure the installed 24 VAC thermostat is capable of controlling the accessory or accessories.
2. Connect the appropriate accessory control wires to the accessory devices from the thermostat (see thermostat manual for connection and setup instructions).
3. If the thermostat is capable of providing a continuous fan call (G signal) during accessory operation: Make sure to connect the thermostat G terminal to the G terminal on the indoor unit. Set up the thermostat, ensuring the G signal energizes during accessory operation.
4. Select the appropriate fan only airflow for the accessory using the indoor unit pushbutton menus or the **CoolCloud** HVAC phone application.
5. Using the thermostat, independently test each accessory in parallel with the continuous fan mode for proper airflow.

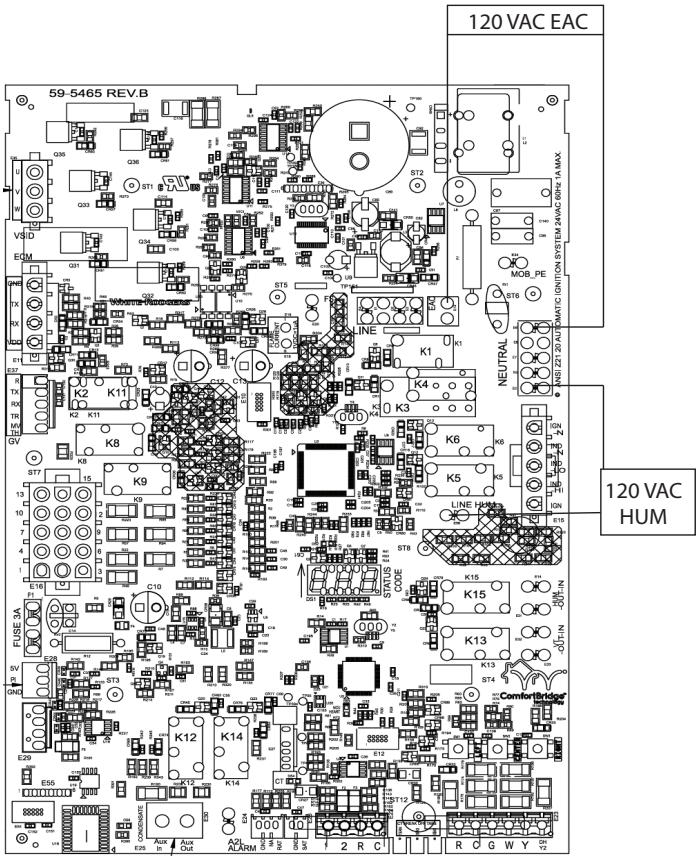

120 VAC Accessories - Accessories Wiring
Figure 47

Low Voltage Ventilation

The Ventilation connections provide dry contact for field ventilator wiring connections. These connections are normally open and energize during the R-32 fault/alarm condition. A VT IN and a VT OUT connectors are provided and are shown in the image below.

Low Voltage A2L Alarm

The A2L alarm connection provides 24 VAC for field alarm wiring connections. These connections are normally open and energize during the R-32 fault/alarm condition. An A2L Alarm connector is provided and is shown in the image below.

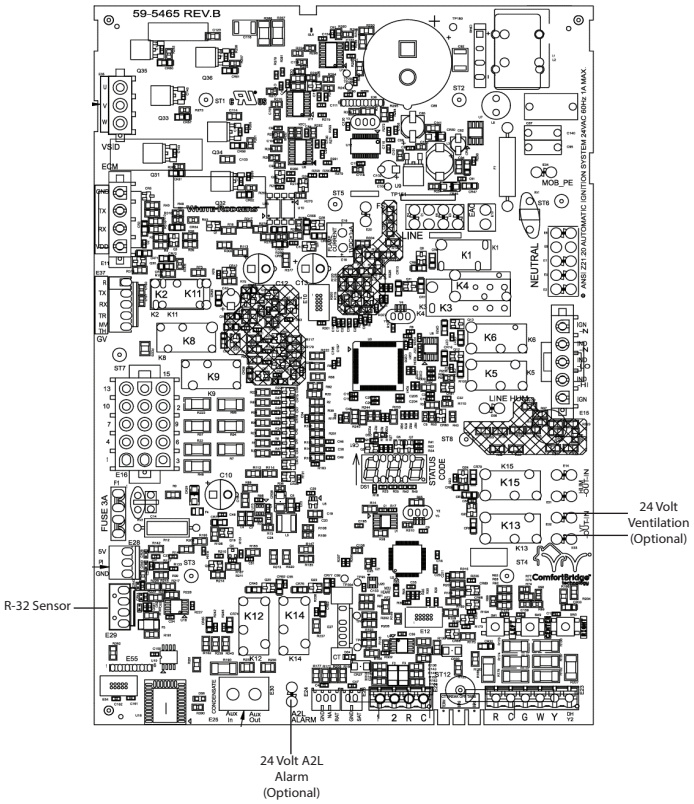

24 VAC Accessories - Accessories Wiring
Figure 48

Ramping Profiles

The variable-speed circulator offers four different ramping profiles. Use these profiles to enhance cooling performance and increase comfort level. Select ramping profiles on the user menu.

- **Profile A** (1) provides only an OFF delay of one (1) minute at 100% of the cooling demand airflow.

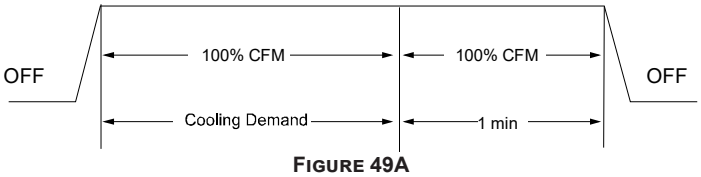

Figure 49A

- **Profile B** (2) ramps up to full cooling demand airflow by first stepping up to 50% of the total demand for 30 seconds. The motor then ramps to 100% of the required airflow. The motor provides a one-minute, post-cycle OFF delay at 100% airflow.

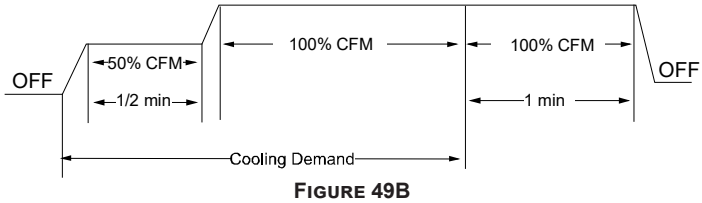

Figure 49B

- **Profile C** (3) ramps up to 85% of the full cooling demand airflow and operates for approximately 7 ½ minutes. The motor then steps up to the 100% demand airflow. The motor provides a one-minute, post-cycle OFF delay at 100% airflow.

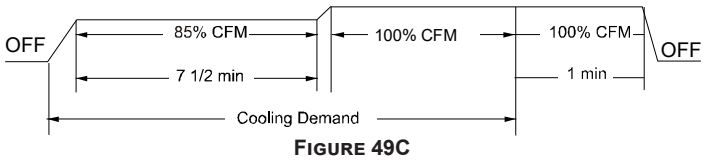

Figure 49C

- **Profile D** (4) ramps up to 50% demand for ½ minute, then ramps to 85% of the full cooling demand for 7 ½ minutes. Once elapsed, the motor runs at 100% capacity for the remainder of the cycle, and provides a post-cycle OFF delay at 50% airflow.

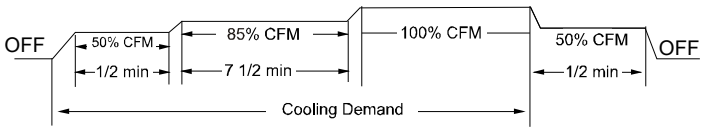

Figure 49D

120 Volt Line Connection or Electronic Air Cleaner

WARNING

HIGH VOLTAGE
To avoid personal injury or death due to electrical shock, disconnect electrical power before servicing or changing any electrical wiring.

The accessory load specifications are as follows:

EAC	1.0 AMP maximum at 120 VAC

Table 6

The furnace integrated control module is equipped with a line voltage accessory terminal for controlling power to an optional, field-supplied electronic air cleaner or any device required to operate in parallel with a circulating fan demand.

To connect an electronic air cleaner using the line voltage EAC terminal:

- Turn OFF power to the furnace before installing any accessories.
- Follow the air cleaner manufacturers' instructions for locating, mounting, grounding, and controlling accessories. Utilize ¼" quick connect terminals to make accessory wiring connections to the furnace integrated control module.
- Connect the hot terminal utilized for accessory operation to the EAC terminal and the neutral side of power to NEUTRAL bus on the integrated furnace control or the neutral connection in the furnace junction box.
- All field wiring must conform to applicable codes.
- If necessary for the installer to supply additional line voltage wiring to the inside of the furnace, wiring must conform to all local codes and have a minimum temperature rating of 105°C.
- All line voltage wire splices must be inside the furnace cabinet.

R-32 FEATURES

R-32 Function

This furnace is equipped with a control board that is capable of shutting off the gas heat and turning on the blower fan in case of an R-32 refrigerant leak in the indoor cooling unit. If the cooling unit that is paired with this furnace does not utilize R-32 as the refrigerant, the R-32 functionalities in the furnace control board will need to be turned off for the furnace to run properly.

R-32 function on the control board is ON by default. The R-32 function can be disabled through the furnace control by entering the A2L Function Enabled menu and selecting "no". If A2L function is disabled, the furnace control will ignore all A2L functions. If A2L function is enabled, the control will monitor the R-32 sensor information.

"A2E" Selected
Figure 50

"Yes" Selected
Figure 51

"No" Selected
Figure 52

R-32 Sensor Wire Routing

Important Note: Wiring routing must not interfere with circulator blower operation, filter removal or routine maintenance. Wire should not be routed near hot surfaces and should be protected from sharp edges.

The R-32 Sensor wire coming from the indoor refrigeration unit will need to be routed into the furnace and connected to the connection point on the furnace control board. This wire should be routed alongside the thermostat wires through the low voltage openings in the left or right side of the furnace blower compartment. Please see the electrical section for the location of the R-32 Sensor connection on the control board.

Furnace Startup

During furnace start up, the furnace control will identify the connected R-32 sensor and will start monitoring the sensor communication. A green LED located next to the sensor connection will indicate if there is communication between the furnace control and the R-32 sensor. The LED will be ON during the duration of the startup and then will either start blinking or turn OFF. The blinking LED signifies that communication with the R-32 sensor is present. The LED OFF signifies that there is no signal with the sensor.

If there are no alarms or faults, the furnace will go into regular run mode after a warm up period. The furnace control monitors the R-32 sensor once per second.

R-32 Refrigerant Leak

If the R-32 sensor on the indoor cooling unit detects a specified concentration of R-32 refrigerant, the furnace will enter Mitigation Mode to dilute the refrigerant concentrations in case of a leak. In Mitigation Mode, the furnace will do the following:

1. Display the A2L Refrigerant Leakage error code (EAL).
2. Shut down the gas operation.
3. Energize the optional ventilation and alarm outputs.
4. Run the fan at max CFM airflow.

Once the R-32 sensor stops detecting a leak, the fan will continue to run for 5 minutes. After the 5 minutes, if there are no other alarms or faults, the control will de-energize the optional ventilation and alarm outputs and then go back to the original operating mode per the thermostat.

A2L Verification

The A2L Function Verification menu allows the installer to verify if the R-32 function operates properly. This menu simulates the refrigerant leak process and is only able to be used when there are no active alarms or faults. To verify the R-32 functions, enter the A2L Function Verification menu and select “YES”. Once “YES” is selected, the furnace will do the following:

1. Display the A2L Refrigerant Leakage code (EAL).
2. Shut down the gas operation.
3. Energize the optional ventilation and alarm outputs.
4. Run the fan at max CFM airflow.

The control will exit the verification function if:

1. The 5 minute timeout expires or
2. An alarm or fault is detected or
3. The user turns OFF the A2L Function Verification.

STARTUP PROCEDURE & ADJUSTMENT

NOTE: This furnace is equipped with a control board that is capable of monitoring for R-32 refrigerant leaks in the indoor refrigeration unit. Please verify that the R-32 sensor wire is plugged in to the furnace control board before startup, if applicable. If furnace is not paired with an R-32 Refrigeration system, the default settings in the furnace control board will need to be changed. Please see the R-32 section for additional information.

Furnace must have a 120 VAC power supply properly connected and grounded. Correct operation is dependent on proper wiring polarity. In addition to the following start-up and adjustment items, refer to further information in *Operational Checks* section.

Furnace Cabinet

Check that all furnace cabinet sealing components are in place (plugs, grommets, gaskets). **NOTE:** Seal all bottom panel return duct connections and perforations with duct sealant compound or other suitable method to prevent air leakage. For optimal performance, verify that all door gaskets are correctly in place and replace as needed to avoid air leakage.

Drain Trap Priming

Prime the drain trap before furnace startup. To prime, fill both sides of the drain trap with water. This step ensures proper furnace drainage upon startup and prohibits the possibility of flue gases escaping through the drain system.

Furnace Operation

Purge gas lines of air prior to startup. Be sure not purge lines into an enclosed burner compartment. Follow NFPA 54, National Fuel Gas Code for proper purging methods. In Canada, follow approved purging methods in CAN/CSA B149.1-15.

Check for leaks using an approved chloride-free soap and water solution, an electronic combustible gas detector, or other approved method. Verify proper operation of all required kits (high altitude, ect.).

Furnace Startup

1. Close the manual gas shutoff valve external to the furnace.
2. Turn off the electrical power to the furnace.
3. Set the room thermostat to the lowest possible setting.
4. Remove the burner compartment door.

NOTE: The ignition device in this furnace lights automatically. Do not try to light the burner by hand.

5. Move the furnace gas valve manual control to the OFF position.

6. Wait five minutes, then smell for gas. Be sure to check near the floor as some types of gas are heavier than air.
7. If you smell gas after five minutes, immediately follow the safety instructions in the *Safety Considerations* on page 3 of this manual. If you do not smell gas after five minutes, move the furnace gas valve manual control to the ON position.
8. Replace the burner compartment door.
9. Open the manual gas shutoff valve external to the furnace.
10. Turn on the electrical power to the furnace.
11. Adjust the thermostat to a setting above room temperature.
12. After the burners light, set the thermostat to the desired temperature.

Furnace Shutdown

1. Set the thermostat to the lowest setting.
   The integrated control will close the gas valve and extinguish flame. Following a 15 second delay, the induced draft blower will be de-energized. After the fan OFF delay time expires, the blower de-energizes.
2. Remove the burner compartment door and move the furnace gas valve manual control to the OFF position.
3. Close the manual gas shutoff valve external to the furnace.
4. Replace the burner compartment door.

GAS SUPPLY AND PIPING

CAUTION

To prevent unreliable operation or equipment damage, the gas manifold pressure must be as specified on the unit rating plate. Only minor adjustments should be made by adjusting the gas valve pressure regulator.

WARNING

Possible property damage, personal injury, or death may occur if the correct conversion kits are not installed. The appropriate kits must be applied to ensure safe and proper furnace operation. All conversions must be preformed by a qualified installer or service agency.

INLET GAS SUPPLY PRESSURE		
Natural Gas	Minimum: 4.5" W.C.	Maximum: 10.0" W.C.

Table 7

Inlet gas supply pressures must be maintained within the ranges specified in the table 7. The supply pressure must be constant and available with all other household gas fired appliances operating. The minimum gas supply pressure must be maintained to prevent unreliable ignition. The maximum must not be exceeded to prevent unit overfiring.

WARNING

To avoid possible unsatisfactory operation or equipment damage due to underfiring of equipment, use the proper size of natural gas piping needed when running pipe from the meter/tank to the furnace.

Gas Valve

This unit is equipped with a 24 VAC gas valve controlled during furnace operation by the integrated control module. Taps for measuring the gas supply pressure and manifold pressure are provided on the valve.

The gas valve has a manual ON/OFF control located on the valve itself. This control may be set only to the “ON” or “OFF” position. Refer to the lighting instructions label or Startup Procedure & Adjustment for use of this control during start up and shut down periods.

Gas Piping Connections

WARNING

To avoid possible unsatisfactory operation or equipment damage due to underfiring of equipment, use the proper size of natural gas piping needed when running pipe from the meter/tank to the furnace.

When sizing gas lines, be sure to include all appliances which will operate simultaneously. The gas piping supplying the furnace must be properly sized based on the gas flow required, specific gravity of the gas, and length of the run. The gas line installation must comply with local codes, or in their absence, with the latest edition of the National Fuel Gas Code, NFPA 54/ANSI Z223.1

To connect the furnace to the building’s gas piping, the installer must supply a ground joint union, drip leg, manual shutoff valve, and line and fittings to connect to gas valve. In some cases, the installer may also need to supply a transition piece from ½” pipe to a larger pipe size.

The following stipulations apply when connecting gas piping. Refer to Gas Piping Connections Figures 53, 54 and 55 for typical gas line connections to the furnace.

- Gas piping must be supported external to the furnace cabinet so that the weight of the gas line does not distort the burner rack, manifold or gas valve.
- Use black iron or steel pipe and fittings for building piping. Where possible, use new pipe that is properly chamfered, reamed, and free of burrs and chips. If old pipe is used, be sure it is clean and free of rust, scale, burrs, chips, and old pipe joint compound.
- Use pipe joint compound on male threads ONLY. Always use pipe joint compound (pipe dope) that is APPROVED FOR ALL GASES. DO NOT apply compound to the first two threads.
- Use ground joint unions.

- Install a drip leg to trap dirt and moisture before it can enter the gas valve. The drip leg must be a minimum of 3” long.
- Install a ⅛” NPT pipe plug fitting, accessible for test gauge connection, immediately upstream of the gas supply connection to the furnace.
- Always use a back-up wrench when making the connection to the gas valve to keep it from turning. The orientation of the gas valve on the manifold must be maintained as shipped from the factory. Maximum torque for the gas valve connection is 375 in-lbs; excessive over-tightening may damage the gas valve.
- Install a manual shutoff valve between the gas meter and unit within six feet of the unit. If a union is installed, the union must be downstream of the manual shutoff valve, between the shutoff valve and the furnace.
- Tighten all joints securely.

Natural Gas Capacity of Pipe
In Cubic Feet of Gas Per Hour (CFH)

Length of Pipe in Feet	Nominal Black Pipe Size				
	1/2"	3/4"	1"	1 1/4"	1 1/2"
10	132	278	520	1050	1600
20	92	190	350	730	1100
30	73	152	285	590	980
40	63	130	245	500	760
50	56	115	215	440	670
60	50	105	195	400	610
70	46	96	180	370	560
80	43	90	170	350	530
90	40	84	160	320	490
100	38	79	150	305	460

(Pressure 0.5 psig or less and pressure drop of 0.3" W.C.; Based on 0.60 Specific Gravity Gas)

$$\text{CFH} = \frac{\text{BTUH Furnace Input}}{\text{Heating Value of Gas (BTU/Cubic Foot)}}$$

Table 8

- Connection method must be in compliance with all local and national codes. US: National Fuel Gas Code (NFGC) NFPA 54-2012/ANSI Z223.1-2012 and the Installation Standards, Warm Air Heating and Air Conditioning Systems ANSI/NFPA 90B.
  Connect the furnace to the building piping by one of the following methods:
  – Rigid metallic pipe and fittings.
  – Semi-rigid metallic tubing and metallic fittings.
  Aluminum alloy tubing must not be used in exterior locations. In order to seal the grommet cabinet penetration, rigid pipe must be used to reach the outside of the cabinet. A semi-rigid connector to the gas piping may be used from there.
- Use listed gas appliance connectors in accordance with their instructions. Connectors must be fully in the same room as the furnace.
- Protect connectors and semirigid tubing against physical and thermal damage when installed. Ensure aluminum-alloy tubing and connectors are coated to protect against external corrosion when in contact with masonry, plaster, or insulation, or subjected to repeated wetting by liquids such as water (except rain water), detergents, or sewage.

The gas piping may enter the left or right side of the furnace cabinet. The installer must supply following fittings starting from the gas valve.

- ½” dia x 2” long nipple
- 90 degree elbow
- Additional length of rigid piping enough to reach the outside of the cabinet
- Grounded joint union
- Drip leg
- Manual gas shut off valve

A semi-rigid connector to the gas piping can be used outside the cabinet per local codes. ½” NPT pipe and fittings are required. Model requires one 90 degree elbow, one 2” nipple and additional nipple to reach outside the cabinet.

A semi-rigid connector to the gas piping can be used outside the cabinet per local codes. From the elbow, the length of pipe and the fittings required will vary by the side chosen, location of union and cabinet width. The union may be placed inside or outside of the cabinet.

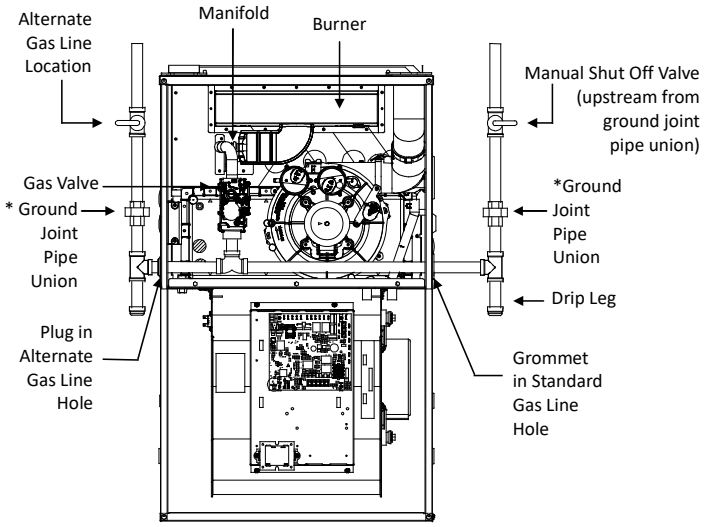

* NOTE: Union may be inside furnace cabinet where allowed by local codes.

Upflow
Figure 53

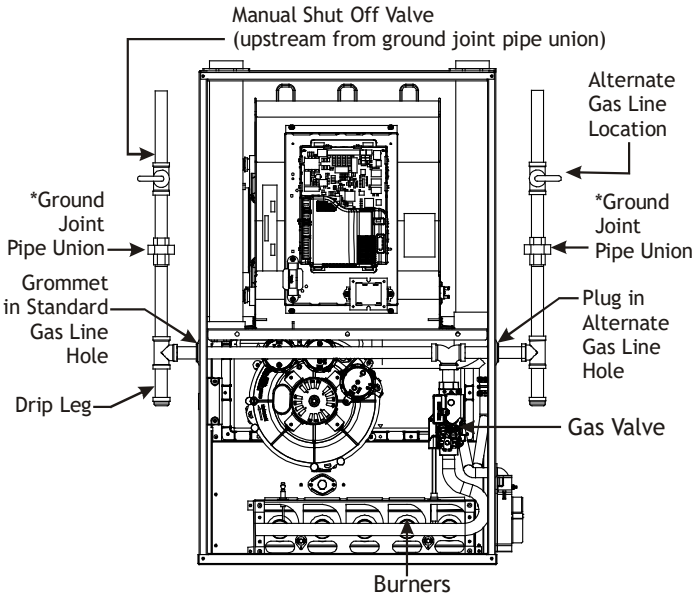

**NOTE: Union may be inside furnace cabinet where allowed by local codes.*

Downflow
Non-ULN furnace shown (ULN similar)
Figure 54

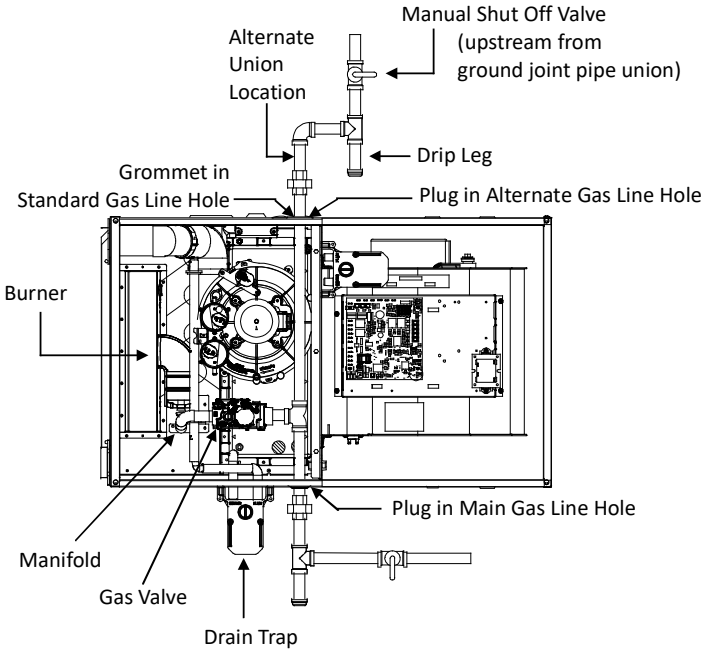

Upflow - Horizontal Left
Downflow - Horizontal Left Similar (not shown)
Figure 55

Gas Piping Checks

WARNING

To avoid the possibility of explosion or fire, never use a match or open flame to test for leaks.

Before placing unit in operation, leak test the unit and gas connections.

Check for leaks using an approved chloride-free soap and water solution, an electronic combustible gas detector, or other approved testing methods.

CAUTION

To prevent possible property damage or personal injury due to fire, the following instructions must be performed regarding gas connections, pressure testing, location of shutoff valve and installation of gas piping.

NOTE: Never exceed specified pressures for testing. Higher pressure may damage the gas valve and cause subsequent overfiring, resulting in heat exchanger failure.

Disconnect this unit and shutoff valve from the gas supply piping system before pressure testing the supply piping system with pressures in excess of ½ psig (3.48 kPa).

Isolate this unit from the gas supply piping system by closing its external manual gas shutoff valve before pressure testing supply piping system with test pressures equal to or less than ½ psig (3.48 kPA).

WARNING

If the gas furnace is installed in a basement, an excavated area or confined space, it is strongly recommended to contact a certified contractor to install a gas detecting warning device in case of a gas leak.

CIRCULATING AIR & FILTERS

Duct Work - Air Flow

WARNING

Never allow the products of combustion, including carbon monoxide, to enter the return duct work or circulation air supply.

Duct systems and register sizes must be properly designed for the CFM and external static pressure rating of the furnace. Ductwork should be designed in accordance with the recommended methods of "Air Conditioning Contractors of America" Manual D.

Install the duct system in accordance with Standards of the National Board of Fire Underwriters for the Installation of Air Conditioning, Warm Air Heating and Ventilating Systems. Pamphlets No. 90A and 90B.

A closed return duct system must be used, with the return duct connected to the furnace. **NOTE:** Ductwork must never be attached to the back of the furnace. For installations requiring 1600 CFM or more, use a bottom return or two-sided return. Flexible joints may be used for supply and return connections to reduce noise transmission. To prevent the blower from interfering with combustion air or draft when a central return is used, a connecting duct must be installed between the unit and the utility room wall. Never use a room, closet, or alcove as a return air chamber.

Checking Duct Static

Refer to your furnace rating plate for the maximum ESP (external duct static) rating.

Total external static refers to everything external to the furnace cabinet. Cooling coils, filters, ducts, grilles, registers must all be considered when reading your total external static pressure. The supply duct pressure must be read between the furnace and the cooling coil. This reading is usually taken by removing the "A" shaped block off plate from the end on the coil; drilling a test hole in it and reinstalling the block off plate. Take a duct static reading at the test hole. Tape up the test hole after your test is complete. The negative pressure must be read between the filter and the furnace blower.

Too much external static pressure will result in insufficient air that can cause excessive temperature rise. This can cause limit switch tripping and heat exchanger failure.

To determine total external duct static pressure, proceed as follows:

1. With clean filters in the furnace, use a manometer to measure the static pressure of the return duct at the inlet of the furnace (Negative Pressure).
2. Measure the static pressure of the supply duct (Positive Pressure).
3. The difference between the two numbers is .4" w.c.

Example:
static reading from return duct = -.1" w.c.
static reading from supply duct = .3" w.c.
total external static pressure on this system = .4" w.c.

NOTE: Both readings may be taken simultaneously and read directly on the manometer if so desired. If an air conditioner coil or Electronic Air Cleaner is used in conjunction with the furnace, the readings must also include theses components, as shown in the following drawing.

4. Consult proper tables for the quantity of air.

If the total external static pressure exceeds the maximum listed on the furnace rating plate, check for closed dampers, registers, undersized and/or oversized poorly laid out duct work.

The temperature rise of the furnace must be within the temperature rise range listed on the furnace rating plate.

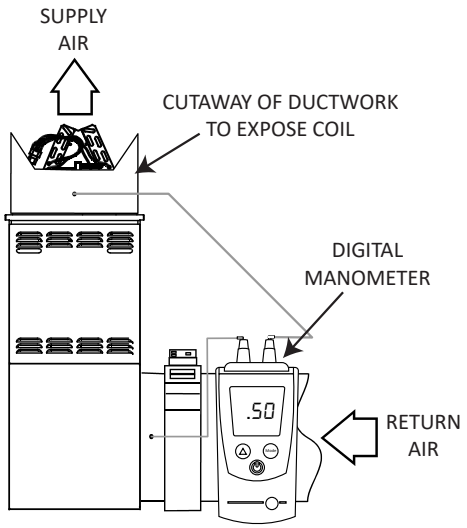

Checking Static Pressure (80% Furnace Shown, 90% Similar) Figure 56

WARNING

Edges of sheet metal holes may be sharp. Use gloves as a precaution when removing sheet metal from return air openings.

Bottom Return Air Opening [Upflow Models]

The bottom return air opening on upflow models utilizes a "lance and cut" method to remove sheet metal from the duct opening in the base pan. To remove, simply press out the lanced sections by hand to expose the metal strips retaining the sheet metal over the duct opening. Using tin snips, cut the metal strips and remove the sheet metal covering the duct opening. In the corners of the opening,

cut the sheet metal along the scribe lines to free the duct flanges. Using the scribe line along the duct flange as a guide, unfold the duct flanges around the perimeter of the opening using a pair of seamer pliers or seamer tongs.

NOTE: Airflow area will be reduced by approximately 18% if duct flanges are not unfolded. This could cause performance issues and noise issues.

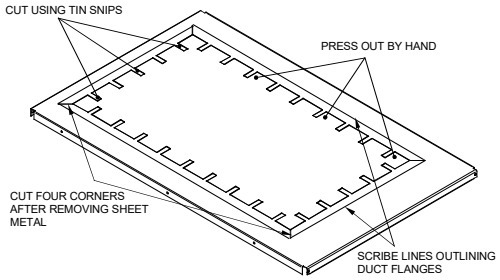

Duct Flange Cut Outs
Figure 57

When the furnace is used in connection with a cooling unit, the furnace should be installed in parallel with or on the upstream side of the cooling unit to avoid condensation in the heating element. With a parallel flow arrangement, the dampers or other means used to control the flow of air must be adequate to prevent chilled air from entering the furnace and, if manually operated, must be equipped with means to prevent operation of either unit unless the damper is in the full heat or cool position.

When the furnace is installed without a cooling coil, it is recommended that a removable access panel be provided in the outlet air duct. This opening shall be accessible when the furnace is installed and shall be of such a size that the heat exchanger can be viewed for visual light inspection or such that a sampling probe can be inserted into the airstream. The access panel must be made to prevent air leaks when the furnace is in operation.

NOTE: In a horizontal installation the air conditioning coil must be adequately supported by proper brackets and supports. Inadequate coil support can result in furnace cabinet distortion and air leakage.

When the furnace is heating, the temperature of the return air entering the furnace must be between 55°F and 100°F.

Filters - Read This Section Before Installing The Return Air Duct work

Filters must be used with this furnace. Discuss filter maintenance with the building owner. Filters do not ship with this furnace, but must be provided, sized and installed externally by the installer. Filters must comply with UL900 or CAN/ULCS111 standards. Damage or repairs due to the installation of the furnace without filters is not covered under the warranty.

On upflow units, guide dimples locate the side return cutout locations. Use a straight edge to scribe lines connecting the dimples. Cut out the opening on these lines. **NOTE: An undersized opening will cause reduced airflow.**

Refer to the Filter Sizing Chart to determine filter area requirements.

Filter Sizing Chart

Model	Minimum Recommended Filter Size^
*RVS960603BU	1 - 16 X 25 Side or Bottom
*RVS960805CU	1 - 20 X 25 Bottom/2 - 16 X 25 Side Return
*DVS960603BU	2 - 10 X 20 or 1 - 14 X 25 Top Return
*DVS960805CU	2 - 14 X 20 or 1 - 20 X 25 Top Return

^ Larger filters may be used, filters may also be centrally located.

Table 9

Change filters before occupants take ownership of a new home!

One of the most common causes of a problem in a forced air heating system is a blocked or dirty filter. Circulating air filters must be inspected monthly for dirt accumulation and replaced if necessary. Failure to maintain clean filters can cause premature heat exchanger failure. A new home may require more frequent replacement until all construction dust and dirt is removed. Circulating air filters are to be installed in the return air duct external to the furnace cabinet. Consider installing an air cleaner with deep-pleated media filter at the time of furnace installation. A deep-pleated filter with a MERV rating of 8 (minimum) will often provide better filtration to protect equipment and the air distribution system than a standard 1” filter and often has lower static pressure loss than a 1” filter. Also a deep-pleated filter will typically require less frequent replacement intervals. Avoid using highly restrictive 1” filters which produce static pressure loss greater than .25” W.C. In some installations the minimum filter size required (consult filter sizing chart above) will not lend itself to a filter installation on the side of the furnace. The installation of a centrally installed air cleaner cabinet or a return duct filter installation may offer more practicality.

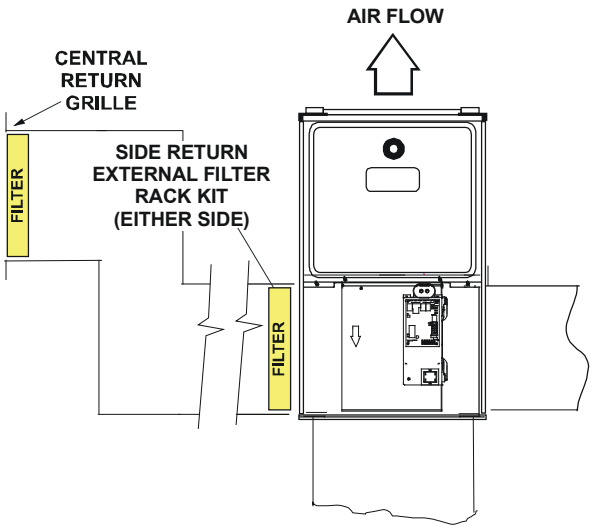

Possible Upright Upflow
Figure 58

Horizontal Installations

Filters must be installed in either the central return register or in the return air duct work.

Gas Supply Pressure Measurement
Gas Pressure Test

CAUTION

To prevent unreliable operation or equipment damage, the inlet gas supply pressure must be as specified on the unit rating plate with all other household gas fired appliances operating.

The line pressure supplied to the gas valve must be within the range specified on Table 7 (page 30). The supply pressure can be measured at the gas valve inlet pressure tap or at a hose fitting installed in the gas piping drip leg. The supply pressure must be measured with the burners operating. To measure the gas supply pressure, use the following procedure.

1. Turn OFF gas to furnace at the manual gas shutoff valve external to the furnace. Back inlet pressure test port screw turn counter clockwise, not more than one turn.
2. Connect a calibrated manometer (or appropriate gas pressure gauge) at either the gas valve inlet pressure tap or the gas piping drip leg. See White-Rodgers 36J22Y-204 gas valve figure below for location of inlet pressure tap.

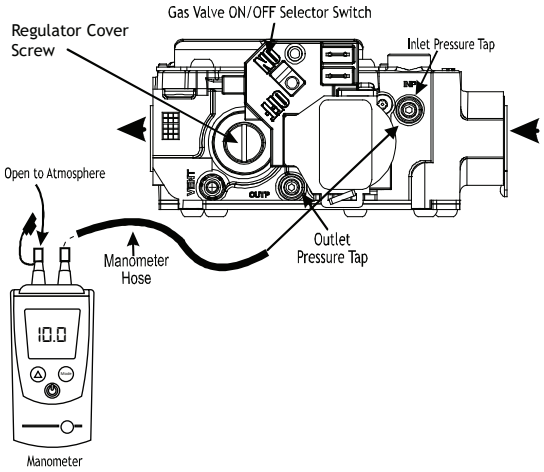

White-Rodgers Model 36J22Y-204 Connected to Manometer
Figure 59

NOTE: If measuring gas pressure at the drip leg, a field-supplied hose barb fitting must be installed prior to making the hose connection. If using the inlet pressure tap on the White-Rodgers 36J22 gas valve, then use the 36G/J Valve Pressure Check Kit, Part No. 0151K00000S.

3. Turn ON the gas supply and operate the furnace and all other gas consuming appliances on the same gas supply line.
4. Measure furnace gas supply pressure with burners firing. Supply pressure must be within the range specified in the Inlet Gas Supply Pressure table 7 (page 30).
   If supply pressure differs from table, make the necessary adjustments to pressure regulator, gas piping size, etc., and/or consult with local gas utility.
5. Turn OFF gas to furnace at the manual shutoff valve and disconnect manometer. Reinstall plug and tighten as needed before turning on gas to furnace.
6. Turn OFF any unnecessary gas appliances stated in step 3.

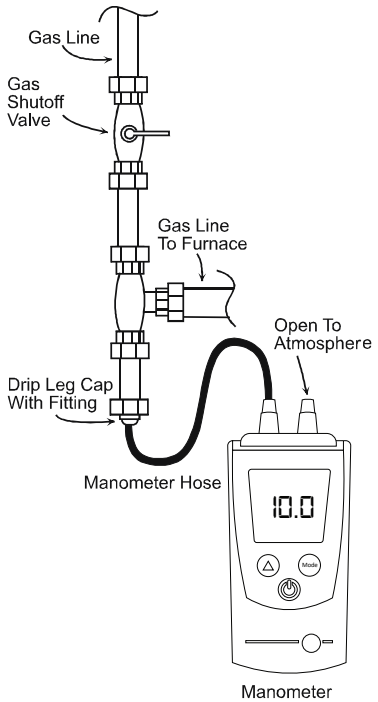

Measuring Inlet Gas Pressure (Alt. Method)
Figure 60

Gas Manifold Pressure Measurement and Adjustment

Only small variations in gas pressure should be made by adjusting the gas valve pressure regulator. The manifold pressure must be measured with the burners operating. To measure and adjust the manifold pressure, use the following procedure.

1. Turn OFF gas to furnace at the manual gas shutoff valve external to the furnace.
2. Turn off all electrical power to the system.
3. Outlet pressure tap connections: White-Rodgers 36J22 valve: Back outlet pressure test screw (outlet pressure tap) out one turn (counterclockwise, not more than one turn).
4. Connect calibrated manometer (or appropriate pressure gauge) at the gas valve outlet pressure tap. See White-Rodgers 36J22Y-204 gas valve Figure 59 for location of outlet pressure tap.
5. Turn ON the gas supply.
6. Turn on power and close thermostat “R” and “W” contacts to provide a call for heat.
7. Measure the gas manifold pressure with burners firing. Adjust manifold pressure using the Manifold Gas Pressure table 10 shown below.

Manifold Gas Pressure		
Gas	**Range**	**Nominal**
Natural	2.8 - 3.2" w.c.	3.0" w.c.

Table 10

8. Remove regulator cover screw from the outlet pressure regulator adjust tower and turn screw clockwise to increase pressure or counterclockwise to decrease pressure. Replace regulator cover screw.
9. Turn off all electrical power and gas supply to the system.
10. Remove the manometer hose from the hose barb fitting or outlet pressure tap.
11. Replace outlet pressure tap: White-Rodgers 36J22 valve: Turn outlet pressure test screw in to seal pressure port (clockwise, 7 in-lb minimum).
12. Turn on electrical power and gas supply to the system.
13. Close thermostat contacts “R” and “W” to energize the valve.

Using a leak detection solution or soap suds, check for leaks at outlet or screw (White-Rodgers valve). Bubbles forming indicate a leak. SHUT OFF GAS AND REPAIR ALL LEAKS IMMEDIATELY!

CAUTION

To prevent unreliable operation or equipment damage, the inlet gas supply pressure must be as specified on the unit rating plate with all other household gas fired appliances operating.

Gas Input Rate Measurement (Natural Gas Only)

The actual gas input rate to the furnace must never be greater than that specified on the unit rating plate. To measure natural gas input using the gas meter, use the following procedure.

1. Turn OFF the gas supply to all other gas-burning appliances except the furnace.
2. While the furnace is operating at high fire rate, time and record one complete revolution of the gas meter dial, measuring the smallest quantity, usually the dial that indicates ½ cu. ft. per revolution. You will use this number to calculate the quantity of gas in cubic ft. if the furnace would consume if it ran steadily for one hour (3600 seconds).
3. If the ½ cu. ft. dial was used, multiply your number x 2.

EXAMPLE: If it took 23 seconds to complete one revolution of the ½ ft. dial (23 x 2 = 46).

This tells us that at this rate, it would take 46 seconds to consume one cu. ft. of gas.

This tells us that in one hour, the furnace would consume 78 cu. ft. of gas (3600 / 46 = 78).

The typical value range for 1 cu. ft. of natural gas is around 1025 BTU. Check with your gas utility, if possible. In this example, the furnace is consuming 80,000 BTUH.

NOTE: The final manifold pressure cannot vary by more than ± 0.2" w.c. for Natural gas from the specified setting. Consult your local gas supplier if additional input rate adjustment is required.

4. Turn ON gas to and relight all other appliances turned off in step 1. Be certain that all appliances are functioning properly and that all pilot burners (if applicable) are operating.

Temperature Rise

Air temperature rise is the temperature differench between supply and return air. The proper amount of temperature rise is usually obtained when the unit is operated at the rated input with the "as shipped" blower speed. If the correct amount of temperature rise is not obtained, it may be necessary to change the blower speed.

Temperature rise must be within the range specified on the unit rating plate. An incorrect temperature rise may result in condensing in or overheating of the heat exchanger. The temperature rise of the furnace must be within the temperature rise range listed on the furnace rating plate.

Determine and adjust temperature rise as follows:

1. Operate furnace with burners firing for approximately ten minutes. Ensure all registers are open and all duct dampers are in their final (fully or partially open) position.
2. Place thermometers in the return and supply ducts as close to the furnace as possible. Thermometers must not be influenced by radiant heat by being able to "see" the heat exchanger.
3. Subtract the return air temperature from the supply air temperature to determine the air temperature rise. Allow adequate time for thermometer readings to stabilize.
4. Adjust temperature rise by adjusting the circulator blower speed. Increase blower speed to reduce temperature rise. Decrease blower speed to increase temperature rise. Refer to Startup Procedure and Adjustment - Circulator Blower Speeds for speed changing details.

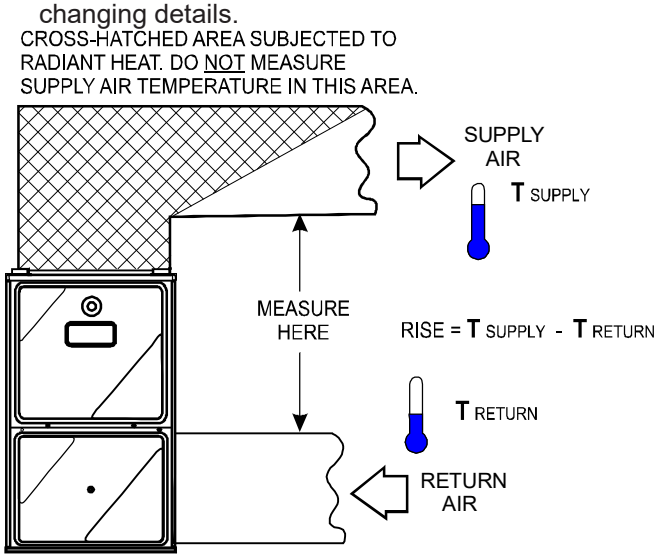

Temperature Rise Measurement
Figure 61

OPERATIONAL CHECKS
SAFETY CIRCUIT DESCRIPTION

CAUTION

To avoid personal injury or death, do not remove internal compartment covers or attempt any adjustment. Electrical components are contained in both compartments. Contact a qualified service agent at once if an abnormal operation should develop.

WARNING

Do not bypass safety devices.

A number of safety circuits are employed to ensure safe and proper furnace operation. These circuits serve to control any potential safety hazards and serve as inputs in the monitoring and diagnosis of abnormal function. These circuits are continuously monitored during furnace operation by the integrated control module.

Integrated Control Module

The integrated control module is an electronic device which, if a potential safety concern is detected, will take the necessary precautions and provide diagnostic information through an LED.

Primary Limit

The primary limit control is located on the partition panel and monitors heat exchanger compartment temperatures. It is a normally closed (electrically), automatic reset, temperature activated sensor. The limit guards against overheating as a result of insufficient conditioned air passing over the heat exchanger.

Auxiliary Limit

The auxiliary limit controls are located on or near the circulator blower and monitors blower compartment temperatures. They are a normally closed (electrically), manual-reset sensors. These limits guard against overheating as a result of insufficient conditioned air passing over the heat exchanger.

Burner Temperature Switch

The burner temperature switch is mounted on the burner assembly to monitor the burner box temperature. It is normally closed (electrically), auto-reset sensor. This switch guards against the burner flames not being properly drawn into the heat exchanger.

Pressure Sensor

Pressure sensor is mounted on the induced draft blower. Its function is to regulate the induced draft blower's speed in order to maintain proper air-fuel ratio for clean and reliable combustion.

Pressure Switches
The pressure switches are normally open (closed during operation) negative air pressure activated switches. They monitor the airflow (combustion air and flue products) through the heat exchanger via pressure taps located on the induced draft blower and the coil front cover. These switches guard against insufficient airflow (combustion air and flue products) through the heat exchanger and/or blocked condensate drain conditions.

Flame Sensor
The flame sensor is a probe mounted to the burner assembly which uses the principle of flame rectification to determine the presence or absence of flame.

TROUBLESHOOTING

Troubleshooting Chart
Refer to the Troubleshooting Codes chart for assistance in determining the source of unit operational problems.

MAINTENANCE

WARNING

High Voltage!
To avoid personal injury or death due to electrical shock, disconnect electrical power BEFORE performing any service or maintenance.

Annual Inspection
The furnace should be inspected by a qualified installer, or service agency at least once per year. This check should be performed at the beginning of the heating season. This will ensure that all furnace components are in proper working order and that the heating system functions appropriately. Pay particular attention to the following items. Repair or service as necessary.

- Flue pipe system. Check for blockage and/or leakage. Check the outside termination and the connections at and internal to the furnace.
- Heat exchanger. Check for corrosion and/or buildup within the heat exchanger passageways.
- Burners. Check for proper ignition,and flame sense.
- Drainage system. Check for blockage and/or leakage. Check hose connections at and internal to furnace.
- Wiring. Check electrical connections for tightness and/or corrosion. Check wires for damage.
- Filters. Check for Blockage
- R-32 Sensor Wire. Check R-32 sensor wire connection for tightness and check wire for damage.

FILTERS

Filter Maintenance
A return air filter is not supplied with this furnace; however, there must be a means of filtering all of the return air. The installer will supply filter(s) at the time of installation.

Improper filter maintenance is the most common cause of inadequate heating or cooling performance. Filters should be cleaned (permanent) or replaced (disposable) every two months or as required.

Burner

WARNING

To prevent personal injury or death, do not remove any internal compartment covers or attempt any adjustment. Electrical components are not contained in both compartments. Contact a qualified service agent at once if an abnormal flame appearance should develop.

The Ultra Low NOx furnace uses a premix burner. The burner box is sealed to achieve safe and reliable operation.

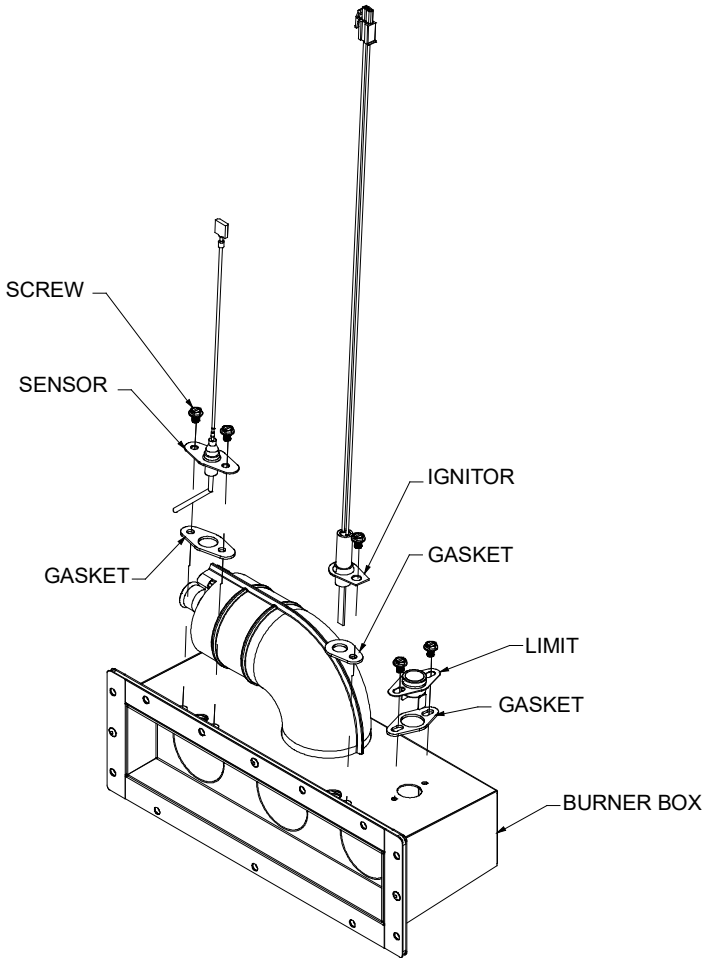

Burner Box
Figure 62

NOTE: Location of flame sensor, igniter and burner limit switch may vary depending on the model.

Induced Draft and Circulator Blowers

The bearings in the induced draft blower and circulator blower motors are permanently lubricated by the manufacturer. No further lubrication is required. Check motor windings for accumulation of dust which may cause overheating. Clean as necessary.

Condensate Trap and Drain System (Qualified Servicer Only)

Annually inspect the drain tubes, drain trap, and field-supplied drain line for proper condensate drainage. Check drain system for hose connection tightness, blockage, and leaks. Clean or repair as necessary.

Flame Sensor (Qualified Servicer Only)

Under some conditions, the fuel or air supply can create a nearly invisible coating on the flame sensor. This coating acts as an insulator causing a drop in the flame sense signal. If the flame sense signal drops too low the furnace will not sense flame and will lock out. The flame sensor should be carefully cleaned by a qualified servicer using emery cloth or steel wool. Following cleaning, the flame sense signal should be above 3 micro amps.

Flue Passages (Qualified Servicer Only)

The heat exchanger flue passageways should be inspected at the beginning of each heating season.

BEFORE LEAVING AN INSTALLATION

- Cycle the furnace with the thermostat at least three times. Verify cooling and fan only operation.
- Review the Owner's Manual with the homeowner and discuss proper furnace operation and maintenance.
- Leave literature packet near furnace.

REPAIR AND REPLACEMENT PARTS

- When ordering any of the listed functional parts, be sure to provide the furnace model, manufacturing, and serial numbers with the order.
- Although only functional parts are shown in the parts list, all sheet metal parts, doors, etc. may be ordered by description.
- Parts are available from your distributor.

Functional Parts List-

Gas Valve
Gas Manifold
Natural Gas Orifice
Igniter
Flame Sensor
Burner Temperature Switch
Primary Limit Switch
Coil Front Cover
Auxiliary Limit Switch
Transformer
Door Switch
Induced Draft Blower
Heat Exchanger with Recuperator Coil
Blower Motor
Blower Wheel
Blower Mounting Bracket
Blower Cutoff
Blower Housing
Pressure Switches
Burner Assembly
Drain Trap
Burner Box Gasket
Integrated Control Module
Pressure Sensor

MENU OPTIONS

LED Display	Menu Description
ASE	Aux (condensate switch enabled)
bSt	Enable or disable inverter boost operation. (Compressor speed may increase when this feature is on) (inverter only)
btt	Boost mode will operate above this selected temperature. On = boost mode always on (default = 105F) (inverter only)
CAP	Cooling Airflow Profile setting (default = profile D shown as 4)
CbP	Heat Pump compressor lockout temperature. Furnace will act as primary heat source below this temperature. (Default = 45° F)
CdL	Compressor off delay at the beginning and end of a defrost cycle. (default = 30 seconds)
CFd	Cooling Airflow Off Delay Time. (default = 60 seconds)
CLr	Resets all cooling settings to factory default.
Cnd	Cooling Airflow On Delay Time (default = 5 seconds)
Cr	Control Firmware Revision Number
Cr9	Enable or disable inverter charge mode.
CrP	Select the range that includes the desired compressor RPS for inverter cooling operation. See inverter manual for menu options
CrS	Maximum Compressor RPS for cooling mode. (inverter only)
CSt	Percentage of high stage cooling airflow to run during low stage operation. (default = 70%)
CtF	Cooling Airflow Trim (default 0%)
CtH	High Cooling Airflow Trim for inverter units. See inverter manual for menu options and defaults
Cti	Intermediate Cooling Airflow Trim for inverter units. See inverter manual for menu options and defaults
CtL	Low Cooling Airflow Trim for inverter units. See inverter manual for menu options and defaults
dF	Compressor run time between defrost cycles. (default = 30 minutes) (2 stage units)
dHE	Enables or disables dehumidification feature in the outdoor unit. (default = Enabled)
dHL	Select "1" to enable dehumidification when the thermostat DH terminal is energized. Select "0" to enable dehumidification when the thermostat DH terminal is de-energized. (default = 1)
FCL	View 6 most recent fault codes and Clear Fault Codes if desired (outdoor communicating units)
FdF	Force system into a defrost cycle (inverter units)
FSd	Constant Fan Speed as percent of maximum airflow. (Default = 25%)
9Fd	Gas Heat Fan Off Delay (default = 90 seconds)
9nd	Gas Heat Fan On Delay (default = 30 seconds)
9St	Percentage of high stage gas heating airflow to run during low stage gas heat operation. (default = 70%)
9H	Gas Heat
F 10	Last 10 Faults
A2U	A2L Function Verification
A2E	A2L Function Enabled

LED Display	Menu Description
9tF	Gas Heat Airflow Trim (default = 0%)
Hdi	Maximum Compressor Run Time Between Defrost Cycles (default = 120 minutes)
HFd	Heat Pump Heating Airflow Off Delay Time (default = 60 seconds)
Hnd	Heat Pump Heating Airflow On Delay Time (default = 5 seconds)
HrP	Select the range that includes the desired compressor RPS for inverter heating operation. See inverter manual for menu options
HrS	Maximum Compressor RPS for Heating Mode (inverter only)
Hrt	Reset all heat pump heating settings to factory default.
HSt	Percentage of high stage heat pump heating airflow to run during low stage operation. (default = 70%)
HtF	Heat Pump Indoor Airflow Trim (default = 0%)
HtH	High Heating Airflow Trim for Inverter Units. See inverter manual for menu options and defaults
Hti	Intermediate Heating Airflow Trim for Inverter Units. See inverter manual for menu options and defaults
HtL	Low Heating Airflow Trim for Inverter Units. See inverter manual for menu options and defaults
L6F	View 6 most recent fault codes and clear all fault codes if desired. (furnace)
Lrn	Restart communications between the indoor and outdoor unit.
OdS	Select the number of stages for the non-communicating outdoor unit. Default = OFF meaning no outdoor unit.
PPd	Enable Pump Down Mode
rFd	Resets furnace settings to factory defaults.
SCt	Maximum Current Option (system will limit capacity to percentage of maximum current) (default = 100%)
Sr	Control Shared Data Revision Number
Srt	Resets all outdoor unit settings to factory defaults.
SUt	System Verification Test (inverters only)
ton	Indoor Airflow for non-communicating outdoor units. (values based on 400CFM per ton) (default = 3.0 Ton)
Utr	Select Outdoor Unit Elevation (SL=same level, OL = outdoor lower, IL = indoor lower) Default = Outdoor Lower
CFS	1 = system will try to satisfy the thermostat quickly. 5 (default) = system will try to satisfy the thermostat more slowly.
t9t	Menu is enabled if the SFC menu is set to 6. Select the target time the system will attempt to satisfy the thermostat.
SUP	Menu is enabled if the SFC menu is set to 6. Select the percentage past the target time when the system will transition to gas furnace operation during heat mode.
Ott	Menu is enabled if the SFC is set to 6. (the gas furnace will run during the next heat call if the heat pump fails to satisfy the custom target time for this number of consecutive cycles) (default = 20 cycles)
Utt	Menu is enabled if the SFC menu is set to 6. (if low stage gas heat is able to consecutively satisfy the thermostat under the set target time for this number of cycles, the system will transition to the heat pump for primary heating)
SdP	Menu is enabled if the SFC menu is set to 6. (this percentage will help determine when switching back to heat pump operation is appropriate. Default = 20%. If target time = 20 minutes, low stage furnace operation must satisfy the thermostat by less than 16 minutes. (target time - 20% default = 16 minutes).

STATUS CODES

LED Display	Description of System Status
1AC	Compressor Cooling, Low Stage (non-communicating units)
2AC	Compressor Cooling, High Stage (non-communicating units)
1AC	Compressor Heat, Low Stage (non-communicating units)
2AC	Compressor Heat, High Stage (non-communicating units)
AC	Compressor Cooling, Single-Stage (single stage non-comm. units)
AC 1	Compressor Cooling, Low Stage (communicating units)
AC2	Compressor Cooling, High Stage (communicating units)
dHU	Dehumidification
FAn	Constant Fan
HP	Compressor Heat, Single-Stage (single stage non-comm. units)
HP 1	Compressor Heat, Low Stage (Communicating Units)
HP2	Compressor Heat, High Stage (Communicating Units)
I dL	Idle
uAC	Inverter Cooling
uHP	Inverter Heating
dFt	Defrost
GH	Gas Heat

Fault Code Recall
Accessing the furnace's diagnostic menu provides access to the last six faults detected by the furnace. Faults are stored most recent to least recent, Any consecutively repeated fault is stored a maximum of three times. **EXAMPLE:** A clogged return air filter causes the furnace limit to trip repeatedly. The control will only store this fault the first three consecutive times the fault occurs. **NOTE: It is highly recommended that the fault history be cleared when performing maintenance or servicing the furnace.**

TROUBLESHOOTING CHART

LED Status	Fault Description	Possible Causes	Corrective Action(s)
IdL	Idle	• Normal operation.	• None
nonE	No 120VAC power to furnace or no 24 volt power to integrated control module.	• Blown fuse or tripped circuit breaker. • Manual disconnect switch turned OFF, door switch open or 24 volt wire improperly connected or loose. • Furnace electrical supply shared with other devices. • Integrated control module is non-functional.	• Check furnace breaker to see if it has tripped. Reset breaker if tripped. • Check 120VAC power to furnace, primary side of the 24 volt transformer and integrated control module. • Check for possible shorts in 120VAC circuit. Repair as necessary. • If transformer has 120VAC on the primary side, confirm transformer has 24 volts on the secondary side. • Verify 24 volt wires from the transformer to the furnace control board are not damaged and are properly connected to the 12-pin harness. Make repairs or wiring corrections if needed. • If all wiring connections have been verified, replace the furnace control board.
Eb0	Circulator blower motor not running when it should be running.	• Loose wiring connection at circulator motor power leads or circulator motor power leads disconnected. • Open circuit in inductor or loose wiring connection at inductor (3/4 HP and 1 HP models only). • Failed circulator blower motor.	• Tighten or correct wiring connection. • Verify continuous circuit through inductor. Replace if open or short circuit. • Check circulator blower motor. Replace if necessary.
Eb1	Integrated control module has lost communications with circulator blower motor.	• Loose wiring connection at circulator motor power leads, • Failed circulator blower motor. • Failed integrated control module.	• Tighten or correct wiring connection. • Check circulator blower motor. Replace if necessary. • Check integrated control module. Replace if necessary.
Eb2	Circulator blower motor horse power in shared data set does not match circulator blower motor horse power.	• Incorrect circulator blower motor in furnace. • Incorrect shared data det in integrated control module.	• Verify circulator blower if motor horsepower is the same specified for the specific model. Replace if necessary. • Verify shared data set is correct for the specific model. Re-populate data using the CoolCloud HVAC App if required.
Eb3	Circulator blower motor is operating in a power, temperature or speed limiting condition.	• Blocked filters. • Restrictive ductwork. • Undersized ductwork. • High ambient temperatures.	• Check filters for blockage. Clean filters or remove obstruction. • Check ductwork for blockage. Remove obstruction. Verify all registers are fully open. • Verify ductwork is appropriately sized for system. Resize/replace ductwork if necessary. • See "III. Product Description" and "IV Location Requirements & Considerations" for furnace installation requirements.
Eb4	Circulator blower motor senses a loss of rotor control. Circulator blower motor senses high current.	• Abnormal motor loading, sudden change in speed or torque, sudden blockage of furnace air inlet/outlet.	• Check filters, filter grilles, registers, duct system and furnace air inlet/outlet for blockages.
Eb5	Circulator blower motor fails to start 10 consecutive times.	• Obstruction in circulator blower housing. • Seized circulator blower motor bearings. • Failed circulator blower motor.	• Check circulator blower for obstructions. Remove and repair/replace wheel or motor if necessary.
Eb6	Circulator blower motor shuts down due to over or under voltage condition. Circulator blower motor shuts down due to over temperature condition on power module.	• High AC line voltage to furnace. • Low AC line voltage to furnace. • High ambient temperatures.	• Check power to furnace. Verify line voltage to furnace is within the range specified on the furnace rating plate. See "III. Product Description" and "IV Location Requirements & Considerations" for furnace installation requirements.
Eb7	Circulator blower motor does not have enough information to operate properly. Motor fails to start 40 consecutive times.	• Error with integrated control module. • Motor has a rotor condition.	• Check integrated control module. Verify control is populated with correct shared data set. See data errors above for details. • Check for locked rotor condition.
Eb9	Airflow is lower than demanded.	• Blocked filters. • Restrictive ductwork. • Undersized ductwork. • High ambient temperatures.	• Check filters for blockage. Clean filters or remove obstruction. • Check ductwork for blockage. Remove obstruction. Verify all registers are fully open. • Verify ductwork is appropriately sized for system. Resize/replace ductwork if necessary.

TROUBLESHOOTING CHART

LED Status	Fault Description	Possible Causes	Corrective Action(s)
Ed0	Data not yet on network.	• No network Data	• Populate shared data set using the CoolCloudHVAC App. • Error code will be cleared once data is downloaded from the CoolCloudHVAC App.
Ed1	Invalid shared data.	• Shared data set is invalid. Use the CoolCloudHVAC App to download the shared data to the furnace.	• Verify shared data set is correct for the specific model. Re-populate shared data set using the CoolCloudHVAC App.
EE0	Furnace lockout due to excessive number of ignition "retries" (3 total). Failure to establish flame. Loss of flame after establishment.	• No gas or improper gas pressure to burners. • Bad igniter or igniter alignment. • Orifices restricted. • Coated/oxidized or improperly connected flame sensor. • Restriction in flue and/or lack of combustion air. • Improper induced draft blower performance.	• Locate and correct gas interruption. • Check front cover pressure switch operation and verify proper drainage (hose, wiring, contact operation). • Replace or realign igniter. • Check flame sense signal. Clean sensor if coated and/or oxidized. • Check flue and/or inlet air piping for blockage, proper length, elbows and termination. • Verify proper induced draft blower performance.
EE1	Pressure switch circuit closed at start of heating cycle.	• Pressure switch contacts sticking. • Short in pressure switch circuit wiring.	• Replace Pressure switch. • Repair short in wiring.
EE2	Pressure switch circuit open.	• Pressure switch hose blocked, pinched, or connected improperly. • Blocked flue pipe, or weak induced draft blower. • Incorrect pressure switch set point or malfunctioning switch contacts. • Loose or improperly connected wiring.	• Inspect pressure switch hose. Repair/replace if necessary. • Inspect flue and/or inlet air piping for blockage, proper length, elbows and termination. Correct as necessary. • Check drain system. Correct as necessary. • Check induced draft blower performance. Correct as necessary. • Check pressure switch operation. Replace as needed. • Tighten or correct wiring connections.
EE3	Primary limit circuit open.	• Insufficient conditioned air over the heat exchanger. • Blocked filters, restrictive ductwork. • Inproper circulator blower speed or failed circulator blower motor. • Loose or improperly connected wiring in high limit circuit.	• Check filters and ductwork for blockage. Clean filters or remove obstruction. • Check circulator blower speed and performance. Correct speed or replace blower motor if necessary. • Tighten or correct wiring connections.
EE4	Flame sensed with no call for heat.	• Short to ground in flame sense circuit. • Lingering burner flame. • Slow closing gas valve.	• Correct short at flame sensor or in flame sensor wiring. • Check for lingering flame. • Verify proper operation of gas valve.
EE5	Open fuse.	• Blown fuse • Short in low voltage wiring • Back of control board is touching mounting panel because standoffs are missing.	• Replace fuse • Locate and correct short in low voltage wiring. • Replace the missing standoffs.
EE6	Flame sense micro amp signal is low.	• Flame sensor is coated/oxidized. • Flame sensor incorrectly positioned in burner flame. • Lazy burner flame due to improper gas pressure or combution air.	• Clean flame sensor if coated or oxidized. • Inspect flame sensor for proper alignment. • Check inlet air piping for blockage, proper length, elbows, and termination. • Compare current gas pressure to rating plate and adjust as needed.
EE7	Problem with ignitor circuit.	• Improperly connected ignitor. • Shorted ignitor. • Poor furnace ground. • Ignitor relay fault on integrated control module.	• Check and correct wiring from integrated control board to ignitor. • Diagnose and replace shorted ignitor as needed. • Verify and correct furnace ground wiring. • Check ignitor output from control. Replace if necessary.
E10	Grounding fault	• Poor neutral connection.	• Verify neutral wire connection to furnace and continuity to ground source.
E11	Open burner box limit switch circuit.	• Gas pressure too high. • Burners mis-aligned. • Restricted heat exchanger or venting.	• Check and correct gas pressure. • Check and correct burner alignment. • Check and correct restriction
E12	Redundant relay open alarm.		• Replace integrated control board. • Do not replace additional components based on this error code.

TROUBLESHOOTING CHART

LED Status	Fault Description	Possible Causes	Corrective Action(s)
E13	Redundant relay stuck closed alarm.		• Replace integrated control board. • Do not replace additional components based on this error code. NOTE: If E13 error code is still active after replacing control board, replace the system wire harness.
E14	External Flash Fault	• Data error in storage function (fault history, system status, etc.)	• Replace integrated control board if fault code does not reset.
E15	Return Air Temperature Sensor Circuit is Open (External)		NOTE: Allow time as the control may take up to 90 seconds to detect sensors. • Verify that the sensor probe is plugged in all the way • Verify that the sensor probe connector is properly crimped. • Verify that resistance across the sensor probe is 10kΩ at 77°F. Resistance is lower at temperatures higher than 77°F. Resistance is higher at temperatures lower than 77°F. • Replace PCB
E16	Return Air Temperature Sensor Circuit is Shorted (External)		• Check sensor probe terminals & conductors for electrical short. • Check PCB connector for shorts if sensor short error reported when sensor probe is not plugged in. • Replace PCB
E17	Supply Air Temperature Sensor Circuit is Open (External)		NOTE: Allow time as the control may take up to 90 seconds to detect sensors. • Verify that the sensor probe is plugged in all the way • Verify that the sensor probe connector is properly crimped. • Verify that resistance across the sensor probe is 10kΩ at 77°F. Resistance is lower at temperatures higher than 77°F. Resistance is higher at temperatures lower than 77°F. • Replace PCB
E18	Supply Air Temperature Sensor Circuit is Shorted (External)		• Check sensor probe terminals & conductors for electrical short. • Check PCB connector for shorts if sensor short error reported when sensor probe is not plugged in. • Replace PCB
E19	Onboard return air temperature sensor is unplugged		• Power cycle the furnace, the control may take up to 90 seconds to detect sensors • Check PCB for any visible electrical or mechanical damage to onboard sensor (R311). • Replace PCB
E1A	Onboard return air temperature sensor is shorted.		• Power cycle the furnace, the control may take up to 90 seconds to detect sensors • Ensure there are no foreign objects on the PCB that could cause an electrical short at onboard sensor (R311). • Replace PCB
E1b	Analog Pressure Sensor reference error.	• 5VDC reference voltage out of range (5.0 +/- 0.2 VDC for 5 seconds).	• Check Red, Black, White harness and connections to the inducer and integrated control board. • Replace pressure sensor.
E1C	Analog Pressure Sensor null error.	• Pressure Sensor voltage out of range when inducer is off.	• Check Red, Black, White harness and connections to the inducer and integrated control board. • Check pressure hoses to pressure sensor and pressure switch.
E1d	Analog Pressure Sensor span error.	• Pressure sensor out of range when pressure switch is closed. • Pressure switch opens and closes outside of expected pressure sensor range.	• Check Red, Black, White harness and connections to the inducer and integrated control board. • Check pressure hoses to pressure sensor and pressure switch. • Replace pressure switch if error continues.

TROUBLESHOOTING CHART

LED Status	Fault Description	Possible Causes	Corrective Action(s)
E1E	Analog Pressure Sensor pressure error.	• Inducer RPM has reached its limit. • Blocked flue pipe.	• Check Red, Black, White harness and connections to the inducer and integrated control board. • Check flue piping for blockage, proper length, elbows and termination. • Replace pressure sensor if necessary.
E1F	Analog Pressure Sensor input error.	• Wrong pressure sensor installed.	• Check Red, Black, White harness and connections to the inducer and integrated control board. • Replace pressure sensor.
EbF	Inducer communication alarm	• Loose wiring connections from the integrated control board to the inducer.	• Check Red, Black, White harness and connections to the inducer and integrated control board.
EEA	Polarity of 120 volt AC is reversed.	• Polarity of 120 volt AC power to furnace or integrated control module is reversed. • Poor furnace ground.	• Review wiring diagram to correct polarity. • Verify proper ground. Correct if necessary. • Check and correct wiring.
EEb	Integrated Control Board is not energizing the gas valve when it should be on.	• Miswired gas valve circuit. • Open gas valve circuit. • Gas valve relay on integrated control board stuck open.	• Check wiring in gas valve circuit. • Replace integrated control board. • Do NOT replace the gas valve.
EEC	Gas valve is energized when it should be off.	• Miswired gas valve circuit. • Shorted gas valve wiring.	• Cycle 120VAC power to the furnace control. If EEC error code is still active, turn off power to the furnace and continue diagnosis. NOTE: This error code is a wiring issue external to the furnace control board. • Inspect system wiring for damage and repair if needed. • If EEC error code is still active, replace system wiring harness. NOTE: After replacing system wire harness, if EEC is still active, replace integrated control board.
EEd	Auxiliary limit switch open (blower compartment).	• 120 volt power supply was shut off during heat cycle. • Insufficient conditioned air over the heat exchanger. Blocked filters, restrictive ductwork, improper circulator blower speed or failed circulator blower motor.	• Check filters and ductwork for blockage. Clean filters or remove obstruction. • Check circulator blower speed and performance. Correct speed or replace blower motor if necessary. • Tighten or correct wiring connections.
EEE	Furnace control board has detected an internal fault.	• 120VAC power wiring loose or damaged. • Poor ground wire. • Damaged or miswired 120V or 24V wiring on the furnace.	• Turn off power to the furnace for at least 3 minutes, then turn power back on (to see if the EEE code will reset). • Inspect 120V and 24V wiring to the furnace and on the furnace for signs of damage or miswiring. • Replace integrated control board. • Do not replace additional components based on this error code.
EEF	AUX switch (condensate switch) open.	• High water level in evaporator coil drain pan or auxiliary drain pan	• Check evaporator coil drain pan, piping and auxiliary drain pan.
EAF	Furnace has lost communication with the R-32 sensor and the furnace is in mitigation mode.	**Furnace may not be paired with R-32 Cooling Unit. Refer to the R-32 Information Section**. • Loose or damaged R-32 sensor wire.	• Verify wire connection to R-32 sensor is not loose. • Verify the R-32 sensor wire is not damaged. • Replace R-32 sensor if necessary.
EA0	R-32 sensor has detected a refrigerant leak and furnace is in mitigation mode.		• Investigate the indoor coil for a refrigerant leak. • Furnace will resume normal operation once a leak is not detected and the 5 minute delay period is over.
EA1	R-32 sensor has detected a fault and furnace is in mitigation mode.		• Investigate the R-32 sensor. • Replace the R-32 sensor if necessary.
EA2	The furnace control board has detected an issue with the internal A2L relay and is running mitigation mode.		• Disconnect any wire connected to the ALARM terminal of the furnace control. • Cycle power to the furnace. If the error code clears, there is an issue with the wiring connected to the ALARM terminal. Repair wiring if necessary. • If the error code does not clear, replace the integrated control board.

WIRING DIAGRAMS

UPFLOW

RVS96**

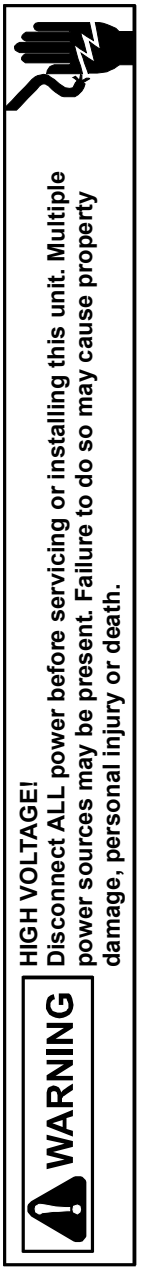

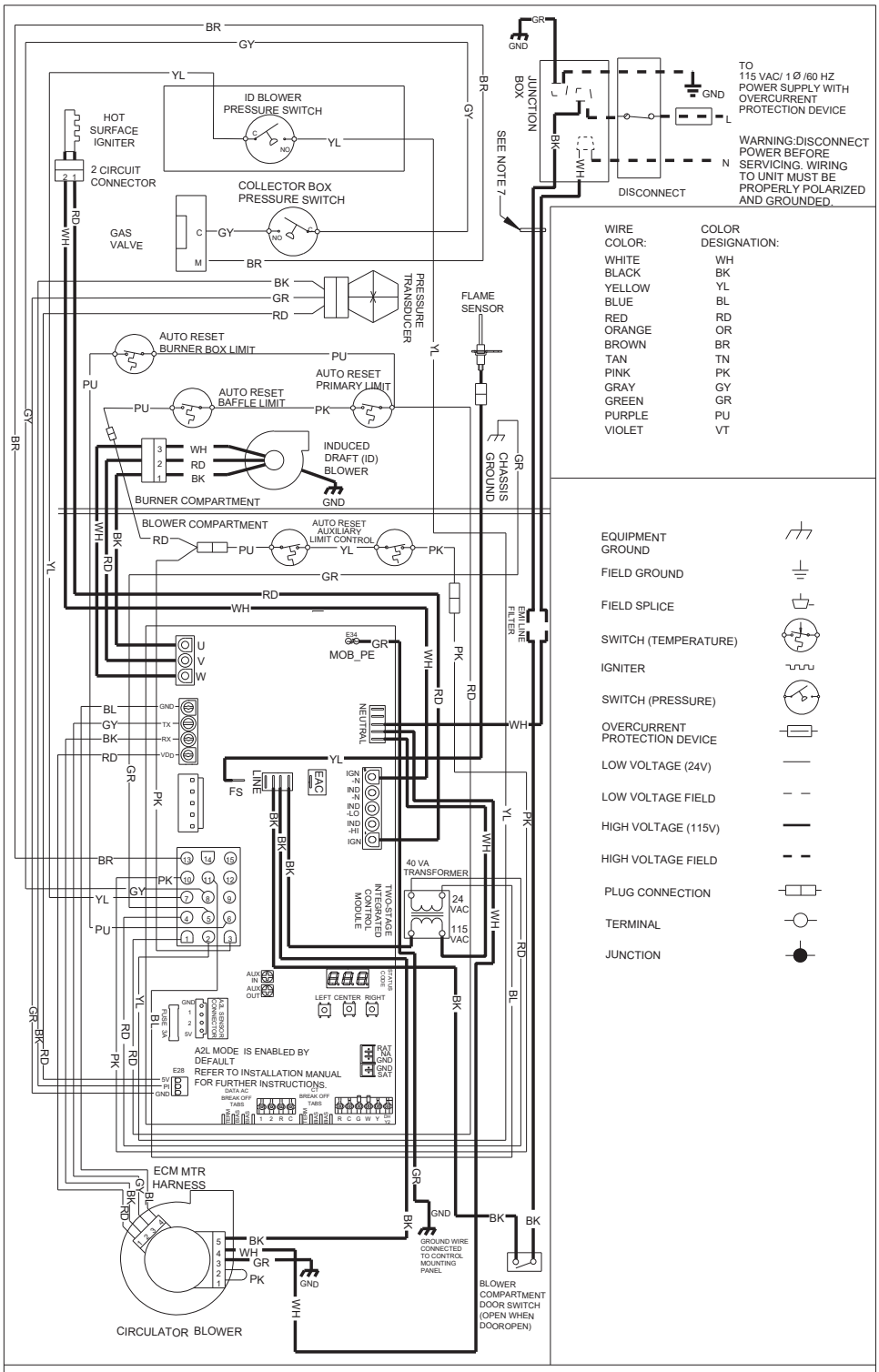

NOTES:

1. MANUFACTURER'S SPECIFIED REPLACEMENT PARTS MUST BE USED WHEN SERVICING.
2. IF ANY OF THE ORIGINAL WIRE AS SUPPLIED WITH THE FURNACE MUST BE REPLACED, IT MUST BE REPLACED WITH WIRING MATERIAL HAVING A TEMPERATURE RATING OF AT LEAST 105 °C. USE COPPER CONDUCTORS ONLY.
3. UNIT MUST BE PERMANENTLY GROUNDED AND CONFORM TO N.E.C. AND LOCAL CODES.
4. TO RECALL THE LAST 6 FAULTS, MOST RECENT TO LEAST RECENT, DEPRESS SWITCH FOR MORE THAN 2 SECONDS WHILE IN STANDBY (NO THERMOSTAT INPUTS)
5. HUMIDIFIER INSTALLATION OPTIONS: USE HUM TERMINAL TO RUN HUMIDIFIER DURING HEAT CALL COMMUNICATING OR LEGACY MODES). USE HUM-IN AND HUM-OUT TERMINALS TO RUN HUMIDIFIER DURING HEAT CALL (COMMUNICATING MODE OR LEGACY MODE) OR INDEPENDENTLY FROM HEAT CALL (COMMUNICATING MODE ONLY - SETUP IS DONE WITHIN COMMUNICATING THERMOSTAT).
6. WHEN THIS FURNACE IS PAIRED WITH NON R-32 REFRIGERANT SYSTEMS, DEFAULT SETTINGS WILL NEED TO BE CHANGED. REFER TO INSTALLATION MANUAL FOR FURTHER INSTRUCTIONS.
7. FERRITE CORE INSTALLED AT THIS LOCATION. ONLY APPLICABLE TO SOME MODELS.

0140F20060-A

Wiring is subject to change. Always refer to the wiring diagram on the unit for the most up-to-date wiring.

WIRING DIAGRAMS

DOWNFLOW

DVS96**

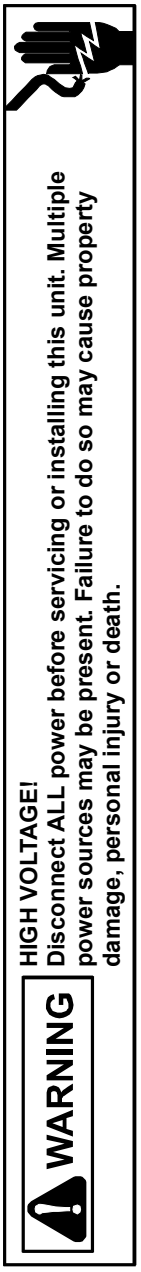

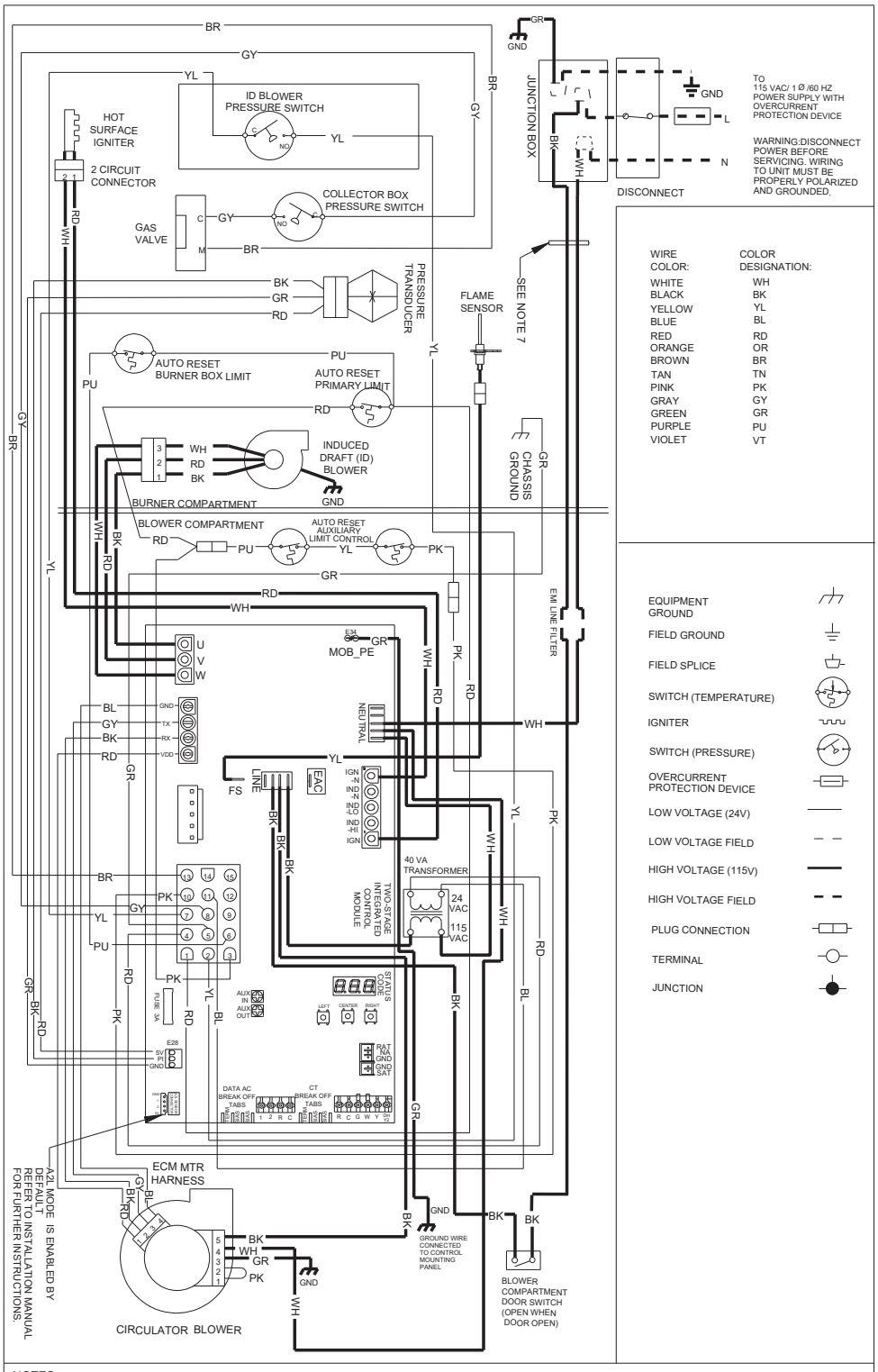

NOTES:

1. MANUFACTURER'S SPECIFIED REPLACEMENT PARTS MUST BE USED WHEN SERVICING.
2. IF ANY OF THE ORIGINAL WIRE AS SUPPLIED WITH THE FURNACE MUST BE REPLACED, IT MUST BE REPLACED WITH WIRING MATERIAL HAVING A TEMPERATURE RATING OF AT LEAST 105° C. USE COPPER CONDUCTORS ONLY.
3. UNIT MUST BE PERMANENTLY GROUNDED AND CONFORM TO N.E.C. AND LOCAL CODES.
4. TO RECALL THE LAST 6 FAULTS, MOST RECENT TO LEAST RECENT, DEPRESS SWITCH FOR MORE THAN 2 SECONDS WHILE IN STANDBY (NO THERMOSTAT INPUTS)
5. HUMIDIFIER INSTALLATION OPTIONS: USE HUM TERMINAL TO RUN HUMIDIFIER DURING HEAT CALL COMMUNICATING OR LEGACY MODES). USE HUM-IN AND HUM-OUT TERMINALS TO RUN HUMIDIFIER DURING HEAT CALL (COMMUNICATING MODE OR LEGACY MODE) OR INDEPENDENTLY FROM HEAT CALL (COMMUNICATING MODE ONLY - SETUP IS DONE WITHIN COMMUNICATING THERMOSTAT).
6. WHEN THIS FURNACE IS PAIRED WITH NON R-32 REFRIGERANT SYSTEMS, DEFAULT SETTINGS WILL NEED TO BE CHANGED. REFER TO INSTALLATION MANUAL FOR FURTHER INSTRUCTIONS.
7. FERRITE CORE INSTALLED AT THIS LOCATION. ONLY APPLICABLE TO SOME MODELS.

0140F20061-A

Wiring is subject to change. Always refer to the wiring diagram on the unit for the most up-to-date wiring.

START-UP CHECKLIST

Furnace				
	Model Number	_____		
	Serial Number	_____		
ELECTRICAL				
Line Voltage (Measure **L1 to N** and **N to Ground** Voltage)	L - N	_____		
	N - G	_____		
Secondary Voltage (Measure Transformer Output Voltage)	R - C	_____		
Blower Amps		_____		
BLOWER EXTERNAL STATIC PRESSURE				
Return Air Static Pressure		_____	IN. W.C.	
Supply Air Static Pressure		_____	IN. W.C.	
Total External Static Pressure (Ignoring +/- from the reading above, add total here)		_____	IN. W.C.	
TEMPERATURES				
Return Air Temperature (Dry bulb / Wet bulb)		_____	DB °F	_____ WB °F
Cooling Supply Air Temperature (Dry bulb / Wet bulb)		_____	DB °F	_____ WB °F
Heating Supply Air Temperature		_____	DB °F	
Temperature Rise		_____	DB °F	
Delta T (Difference between Supply and Return Temperatures)		_____	DB °F	
GAS PRESSURES				
Gas Inlet Pressure		_____	IN. W.C.	
Gas Manifold Pressure (Low Fire)		_____	IN. W.C.	
Gas Manifold Pressure (High Fire)		_____	IN. W.C.	
Gas Type (NG) = Natural Gas / (LP) = Liquid Propane		_____		
Additional Checks				
Check wire routings for any rubbing		_____		
Check for kinked pressure switch tubing		_____		
Check flue elbow for alignment and clamp tightness		_____		
Check screw tightness on blower wheel		_____		
Check factory wiring and wire connections		_____		
Check product for proper clearances as noted by installation instructions		_____		
Check R-32 sensor wire is connected properly (if applicable)		_____		
°F to °C formula: (°F - 32) divided by 1.8 = °C	**°C to °F formula: (°C multiplied by 1.8) + 32 = °F**			

CUSTOMER FEEDBACK

We are very interested in all product comments.
Please fill out the feedback form on one of the following links:
Goodman® Brand Products: (http://www.goodmanmfg.com/about/contact-us).
Amana® Brand Products: (http://www.amana-hac.com/about-us/contact-us).
You can also scan the QR code on the right for the product brand you purchased to be directed to the feedback page.

GOODMAN® BRAND

AMANA® BRAND

PRODUCT REGISTRATION

Thank you for your recent purchase. Though not required to get the protection of the standard warranty, registering your product is a relatively short process, and entitles you to additional warranty protection, except that failure by California and Quebec residents to register their product does not diminish their warranty rights. The duration of warranty coverages in Texas and Florida differs in some cases.

For Product Registration, please register as follows:
Goodman® Brand products: (https://www.goodmanmfg.com/product-registration).
Amana® Brand products: (http://www.amana-hac.com/product-registration).
You can also scan the QR code on the right for the product brand you purchased to be directed to the Product Registration page.

GOODMAN® BRAND

AMANA® BRAND

19001 Kermier Rd., Waller, TX 77484
www.goodmanmfg.com • www.amana-hac.com

© 2026 Daikin Comfort Technologies Manufacturing, Inc.

AMANA HEATING & AIR CONDITIONING ® / TM 2026 Amana. Manufactured under license by Daikin. Limited warranty provided by the manufacturer. All trademarks are the property of their respective owners.