*MEC96 & *CEC96
Two-Stage Gas Furnaces

(Type FSP CATEGORY IV Direct or Non Direct Vent Air Furnace)
(Type FSP CATÉGORIE IV Direct ou four á air souffl' non direct)

These furnaces comply with requirements embodied in the American National Standard / National Standard of Canada ANSI Z21.47·CSA-2.3 Gas Fired Central Furnaces.

C ETL LISTED US
Intertek

INSTALLER: Affix all manuals adjacent to the unit.

As a professional installer you have an obligation to know the product better than the customer. This includes all safety precautions and related items.

Prior to actual installation, thoroughly familiarize yourself with this Instruction Manual. Pay special attention to all safety warnings. Often during installation or repair it is possible to place yourself in a position which is more hazardous than when the unit is in operation.

Remember, it is your responsibility to install the product safely and to know it well enough to be able to instruct a customer in its safe use.

Safety is a matter of common sense...a matter of thinking before acting. Most dealers have a list of specific good safety practices...follow them.

The precautions listed in this Installation Manual are intended as supplemental to existing practices. However, if there is a direct conflict between existing practices and the content of this manual, the precautions listed here take precedence.

RECOGNIZE THIS SYMBOL AS A SAFETY PRECAUTION.

***NOTE:** Please contact your distributor or our website for the applicable Specification Sheet referred to in this manual.

WARNING

ONLY PERSONNEL THAT HAVE BEEN TRAINED TO INSTALL, ADJUST, SERVICE OR REPAIR(HEREINAFTER, "SERVICE") THE EQUIPMENT SPECIFIED IN THIS MANUAL SHOULD SERVICE THE EQUIPMENT. THE MANUFACTURER WILL NOT BE RESPONSIBLE FOR ANY INJURY OR PROPERTY DAMAGE ARISING FROM IMPROPER SERVICE OR SERVICE PROCEDURES. IF YOU SERVICE THIS UNIT, YOU ASSUME RESPONSIBILITY FOR ANY INJURY OR PROPERTY DAMAGE WHICH MAY RESULT. IN ADDITION, IN JURISDICTIONS THAT REQUIRE ONE OR MORE LICENSES TO SERVICE THE EQUIPMENT SPECIFIED IN THIS MANUAL, ONLY LICENSED PERSONNEL SHOULD SERVICE THE EQUIPMENT. IMPROPER INSTALLATION, ADJUSTMENT, SERVICING OR REPAIR OF THE EQUIPMENT SPECIFIED IN THIS MANUAL, OR ATTEMPTING TO INSTALL, ADJUST, SERVICE OR REPAIR THE EQUIPMENT SPECIFIED IN THIS MANUAL WITHOUT PROPER TRAINING MAY RESULT IN PRODUCT DAMAGE, PROPERTY DAMAGE, PERSONAL INJURY OR DEATH.

WARNING

DO NOT BYPASS SAFETY DEVICES.

90% HEX

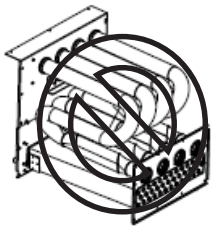

DO NOT LIFT PRODUCT USING HEAT EXCHANGER

19001 Kermier Rd. Waller, Tx 77484
www.goodmanmfg.com • www.amana-hac.com
© 2014-2022 Goodman Manufacturing Company, L.P.

IOG-2011U
02/2022

Amana is a registered trademark of Maytag Corporation or its related companies and is used under license.
All rights reserved.

TABLE OF CONTENTS

Safety Considerations 2
Product Description 4
Product Application 4
Location Requirements & Considerations 5
Combustion & Ventilation Requirements 9
Installation Positions 9
Horizontal Applications & Considerations 10
Propane Gas/High Altitude Installations 10
Condensate Drain Lines & Drain Trap 17
Electrical Connections 22
Gas Supply and Piping 25
Circulating Air & Filters 28
Startup Procedure & Adjustment 31
Dip Switch Settings 35
Normal Sequence of Operation 48
Operational Checks 49
Safety Circuit Description 49
Troubleshooting 49
Maintenance 52
Filters 52
Before Leaving an Installation 53
Repair and Replacement Parts 53
Troubleshooting Chart 54
Wiring Diagram 56
Special Instructions for Products Installed in the State of Massachusetts 57
Start-Up Checklist 58

WARNING

FIRE OR EXPLOSION HAZARD

Failure to follow the safety warnings exactly could result in serious injury, death or property damage.

Never test for gas leaks with an open flame. Use a commercially available soap solution made specifically for the detection of leaks to check all connections. A fire or explosion may result causing property damage, personal injury or loss of life.

AVERTISSEMENT

RISQUE D'INCENDIE OU D'EXPLOSION

Si les consignes de sécurité ne sont pas suivies à la lettre, cela peut entraîner la mort, de graves blessures ou des dommages matériels.

Ne jamais vérifier la présence de fuites de gaz au moyen d'une flamme nue. Vérifier tous les raccords en utilisant une solution savonneuse commerciale conçue spécialement pour la détection de fuites. Un incendie ou une explosion risque de se produire, ce qui peut entraîner la mort, des blessures ou des dommages matériels.

SAFETY CONSIDERATIONS

Adhere to the following warnings and cautions when installing, adjusting, altering, servicing, or operating the furnace. To ensure proper installation and operation, thoroughly read this manual for specifics pertaining to the installation and application of this product.

This furnace is manufactured for use with natural gas. It may be field converted to operate on L.P. gas by using the appropriate L.P. conversion kit listed in the **PROPANE GAS/HIGH ALTITUDE INSTALLATIONS section** of this manual.

Install this furnace only in a location and position as specified in **LOCATION REQUIREMENTS & CONSIDERATIONS section and INSTALLATION POSITIONS section** of this manual.

Provide adequate combustion and ventilation air to the furnace as specified in **COMBUSTION & VENTILATION AIR REQUIREMENTS section of this manual.**

Combustion products must be discharged to the outdoors. Connect this furnace to an approved vent system only, as specified in **VENT/FLUE PIPE & COMBUSTION AIR PIPE** section of this manual.

Never test for gas leaks with an open flame. Use a commercially available soap solution made specifically for the detection of leaks to check all connections, as specified in **GAS SUPPLY AND PIPING** section of this manual.

Always install a furnace to operate within the furnace's intended temperature-rise range with a duct system which has external static pressure within the allowable range, as specified on the furnace rating plate and **OPERATIONAL CHECKS section** of these instructions.

When a furnace is installed so that supply ducts carry air circulated by the furnace to areas outside the space containing the furnace, the return air shall also be handled by duct(s) sealed to the furnace casing and terminating outside the space containing the furnace.

CAUTION

FROZEN AND BURST WATER PIPE HAZARD

Failure to protect against the risk of freezing may result in property damage. Since precautions MUST be made if installing furnace in an area which may drop below freezing. This can cause improper operation or damage to equipment. If the furnace environment has the potential of freezing, the drain trap and drain line must be protected. The use of accessory drain trap heaters, electric heat tape and/or RV antifreeze is recommended for these installations.

A gas-fired furnace for installation in a residential garage must be installed as specified in the **LOCATION REQUIREMENTS AND CONSIDERATIONS section** of this manual.

This furnace may be used as a construction site heater only if certain conditions are met. These conditions are listed in the **PRODUCT APPLICATION section** of this manual.

WARNING

To prevent personal injury or death due to improper installation, adjustment, alteration, service or maintenance, refer to this manual. For additional assistance or information, consult a qualified installer, servicer agency or the gas supplier.

WARNING

If the information in these instructions is not followed exactly, a fire or explosion may result causing property damage, personal injury or loss of life.
- Do not store or use gasoline or other flammable vapors and liquids in the vicinity of this or any other appliance.
- WHAT TO DO IF YOU SMELL GAS:
- **Do not try to light any appliance.**
- **Do not touch any electrical switch; do not use any phone in your building.**
- **Immediately call your gas supplier from a neighbor;s phone. Follow the gas supplier's instructions.**
- **If you cannot reach your gas supplier, call the fire department.**

- Installation and service must be performed by a qualified installer, service agency or the gas supplier.

WARNING

Heating unit should not be utilized without reasonable routine, inspection, maintenance, and supervision. If the building in which any suck device is located will be vacant, care should be taken that such device is routinely inspected, maintained and monitored. In the event that the building maybe exposed to freezing temperatures and will be vacant, all water-bearing pipes should be drained, the building should be properly winterized, and the water source closed. In the event that the building may be exposed to freezing temperatures and will be vacant, an hydronic coil units should be drained as well and, in such case, alternative heat sources should be utilized.

WARNING

To prevent possible property damage, personal injury or death due to electrical shock, the furnace must be located to protect the electrical components from water.

Drain trap must be primed at time of installation. Trap is internally partitioned; add water to both inlet ports until water appears at both sides of the outlet opening. Failure to prime trap at time of installation may have a negative effect on combustion quality and pressure switch action.

Shipping Inspection

All units are securely packed in shipping containers tested according to International Safe Transit Association specifications. The carton must be checked upon arrival for external damage. If damage is found, a request for inspection by carrier's agent must be made in writing immediately.

The furnace must be carefully inspected on arrival for damage and bolts or screws which may have come loose in transit. In the event of damage the consignee should:

1. Make a notation on delivery receipt of any visible damage to shipment or container.
2. Notify carrier promptly and request an inspection.
3. With concealed damage, carrier must be notified as soon as possible - preferably within five days.
4. File the claim with the following support documents within a nine month statute of limitations.

- Original or certified copy of the Bill of Lading, or indemnity bond.
- Original paid freight bill or indemnity in lieu thereof.
- Original or certified copy of the invoice, showing trade and other discounts or reductions.
- Copy of the inspection report issued by carrier's representative at the time damage is reported to carrier.

The carrier is responsible for making prompt inspection of damage and for a thorough investigation of each claim. The distributor or manufacturer will not accept claims from dealers for transportation damage.

WARNING

Should overheating occur or the gas supply fail to shut off, turn off the manual gas shutoff valve external to the furnace before turning off the electrical supply.

WARNING

Possible property damage, personal injury or death due to fire, explosion, smoke, soot, condensation, electrical shock or carbon monoxide may result from improper installation, repair operation, or maintenance of this product.

Electrostatic Discharge (ESD) Precautions

NOTE: Discharge your body's static electricity before touching unit. An electrostatic discharge can adversely affect electrical components.

Use the following precautions during furnace installation and servicing to protect the integrated control module from damage. By putting the furnace, the control, and the person at the same electrostatic potential, these steps will help avoid exposing the integrated control module to electrostatic discharge. This procedure is applicable to both installed and non-installed (ungrounded) furnaces.

1. Disconnect all power to the furnace. Do not touch the integrated control module or any wire connected to the control prior to discharging your body's electrostatic charge to ground.
2. Firmly touch a clean, unpainted, metal surface of the furnaces near the control. Any tools held in a person's hand during grounding will be discharged.
3. Service integrated control module or connecting wiring following the discharge process in step 2. Use caution not to recharge your body with static electricity; (i.e., do not move or shuffle your feet, do not touch ungrounded objects, etc.). If you come in contact with an ungrounded object, repeat step 2 before touching control or wires.
4. Discharge your body to ground before removing a new control from its container. Follow steps 1 through 3 if installing the control on a furnace. Return any old or new controls to their containers before touching any ungrounded object.

To The Installer

Before installing this unit, please read this manual thoroughly to familiarize yourself with specific items which must be adhered to, including but not limited to: unit maximum external static pressure, gas pressures, BTU input rating, proper electrical connections, circulating air temperature rise, minimum or maximum CFM, and motor speed connections.

WARNING

To prevent property damage, personal injury or death due to fire, do not install this furnace in a mobile home, trailer, or recreational vehicle.

PRODUCT DESCRIPTION

Features

The *MEC96 furnace may be installed upflow or horizontally with left or right side down. The *CEC96 furnace may be installed downflow or horizontally with left or right side down. *MEC96 & *CEC96 two-stage gas furnaces features a multi-speed ECM indoor fan motor, two heating inputs (W1 & W2), two cooling inputs (YLO & Y) and a two stage gas valve. A single stage heating thermostat may also be used in conjunction with timed transition to high fire by the furnace integrated control board.

PRODUCT APPLICATION

This furnace is primarily designed for residential home-heating applications. It is NOT designed or certified for use in mobile homes, trailers or recreational vehicles. Neither is it designed or certified for outdoor applications. The furnace **must** be installed indoors (i.e., attic space, crawl space, or garage area provided the garage area is enclosed with an operating door).

This furnace can be used in the following non-industrial commercial applications:

Schools, Office buildings, Churches, Retail stores, Nursing homes, Hotels/motels, Common or office areas

In such applications, the furnace must be installed with the following stipulations:

- It must be installed per the installation instructions provided and per local and national codes.
- It must be installed indoors in a building constructed on site.
- It must be part of a ducted system and not used in a free air delivery application.
- It must not be used as a "make-up" air unit.
- It must be installed as a two-pipe system for combustion air.
- All other warranty exclusions and restrictions apply This furnace is an ETL dual-certified appliance and is appropriate for use with natural or propane gas (**NOTE:** If using propane, a propane conversion kit is required).

Dual certification means that the combustion air inlet pipe is optional and the furnace can be vented as a:

- Non-direct vent (single pipe) central forced air furnace in which combustion air is taken from the installation area or from air ducted from the outside or,
- Direct vent (dual pipe) central forced air furnace in which all combustion air supplied directly to the furnace burners through a special air intake system outlined in these instructions.

This furnace may be used as a construction site heater **ONLY** if all of the following conditions are met:

- The vent system is permanently installed per these installation instructions.
- A room thermostat is used to control the furnace. Fixed jumpers that provide continuous heating CANNOT be used and can cause long term equipment damage. Bi-metal thermostats, or any thermostat affected by vibration must not be used during construction.
- Return air ducts are provided and sealed to the furnace.
- A return air temperature range between 60ºF (16ºC) and 80ºF (27ºC) is maintained.
- MERV 11 (Example P/N AMP-11-2025-45) air filter(s) are installed in the system and inspected daily and replaced as needed during construction and upon completion of construction.
- The input rate and temperature rise are set per the furnace rating plate.
- The furnace must be installed as a two pipe system, using 100% outside air for combustion during construction.

- The furnace heat exchanger, components, duct system, air filters and evaporator coils are thoroughly cleaned following final construction clean up by a qualified person.
- All furnace operating conditions (including ignition, input rate, temperature rise and venting) are verified by a qualified person according to these installation instructions.
- Furnace doors must be in place on the furnace while the furnace is operating in any mode.
- Damage or repairs due to failure to comply with these requirements are not covered under the warranty.

NOTE: THE COMMONWEALTH OF MASSACHUSETTS REQUIRES THAT THE FOLLOWING ADDITIONAL REQUIREMENTS MUST ALSO BE MET:

- Gas furnaces must be installed by a licensed plumber or gas fitter.
- A T-handle gas cock must be used.
- If the unit is to be installed in an attic, the passageway to and the service area around the unit must have flooring.

To ensure proper furnace operation, install, operate and maintain the furnace in accordance with these installation and operation instructions, all local building codes and ordinances.

In their absence, follow the latest edition of the National Fuel Gas Code (NFPA 54/ANSI Z223.1), and/or CAN/CSA B149.1-15 Installation Codes, local plumbing or waste water codes, and other applicable codes.

A copy of the National Fuel Gas Code (NFPA 54/ANSI Z223.1) can be obtained from any of the following:

American National Standards Institute
25 West 43rd Street, 4th Floor
New York, NY 10036

National Fire Protection Association
1 Batterymarch Park
Quincy, MA 02169-7471

CSA International
8501 East Pleasant Valley
Independence, OH 44131

The rated heating capacity of the furnace should be greater than or equal to the total heat loss of the area to be heated. The total heat loss should be calculated by an approved method or in accordance with “ASHRAE Guide” or “Manual J-Load Calculations” published by the Air Conditioning Contractors of America.

A copy of the CAN/CSA B149.1-15 Installation Codes can also be obtained from:
CSA International
178 Rexdale Boulevard
Etobicoke, Ontario, Canada M9W 1R3

LOCATION REQUIREMENTS & CONSIDERATIONS

Follow the instructions listed below and the guidelines provided in the *Combustion and Ventilation Air Requirements* section when selecting a furnace location.

WARNING

POSSIBLE PROPERTY DAMAGE, PERSONAL INJURY OR DEATH DUE TO FIRE, EXPLOSION, SMOKE, SOOT, CONDENSATION, ELECTRICAL SHOCK OR CARBON MONOXIDE MAY RESULT FROM IMPROPER INSTALLATION, REPAIR OPERATION, OR MAINTENANCE OF THIS PRODUCT.

WARNING

TO PREVENT POSSIBLE EQUIPMENT DAMAGE, PROPERTY DAMAGE, PERSONAL INJURY OR DEATH, THE FOLLOWING BULLET POINTS MUST BE OBSERVED WHEN INSTALLING THIS UNIT.

- Centrally locate the furnace with respect to the proposed or existing air distribution system.
- Ensure the temperature of the return air entering the furnace is between 55°F and 100°F when the furnace is heating.
- Provide provisions for venting combustion products outdoors through a proper venting system. Special consideration should be given to vent/flue pipe routing and combustion air intake pipe when applicable. Refer to *Vent/Flue Pipe and Combustion Air Pipe -Termination Locations* for appropriate termination locations and to determine if the piping system from furnace to termination can be accomplished within the guidelines given. **NOTE:** The length of flue and/or combustion air piping can be a limiting factor in the location of the furnace.
- Locate the furnace so condensate flows downwards to the drain. Do not locate the furnace or its condensate drainage system in any area subject to below freezing temperatures without proper freeze protection. Refer to *Condensate Drain Lines and Trap* for further details.
- Ensure adequate combustion air is available for the furnace. Improper or insufficient combustion air can expose building occupants to gas combustion products that could include carbon monoxide. Refer to *Combustion and Ventilation Air Requirements.*
- Set the furnace on a level floor to enable proper condensate drainage. If the floor becomes wet or damp at times, place the furnace above the floor on a concrete base sized approximately 1-½” larger than the base of the furnace. Refer to the *Horizontal Applications and Considerations* for leveling of horizontal furnaces.
- Ensure upflow or horizontal furnaces are not installed directly on carpeting, or any other combustible material. The only combustible material allowed is wood.

- Exposure to contaminated combustion air will result in safety and performance-related problems. Do not install the furnace where the combustion air is exposed to the following substances:
  - permanent wave solutions
  - carbon tetrachloride
  - deicing salts or chemicals
  - cleaning solutions (such as perchloroethylene)
  - paint removers
  - cements and glues
  - chlorinated waxes or cleaners
  - water softening chemicals
  - halogen type refrigerants
  - chlorine-based swimming pool chemicals
  - printing inks
  - varnishes
  - hydrochloric acid
  - antistatic fabric softeners for clothes dryers
- Seal off a *non-direct vent* furnace if it is installed near an area frequently contaminated by any of the above substances. This protects the *non-direct vent* furnace from airborne contaminants. To ensure that the enclosed *non-direct vent* furnace has an adequate supply of combustion air, vent from a nearby uncontaminated room or from outdoors. Refer to the *Combustion and Ventilation Air Requirements* for details.
- If the furnace is used in connection with a cooling coil unit, install the furnace upstream or in parallel with the cooling coil unit. Premature heat exchanger failure will result if the cooling unit is placed ahead of the furnace.
- For vertical (upflow or downflow) applications, the minimum cooling coil width shall not be less than furnace width minus 1”. Additionally, a coil installed above an upflow furnace or under a counterflow furnace may be the same width as the furnace or may be one size larger than the furnace. *Example: a “C” width coil may be installed with a “B” width furnace.* For upflow applications, the front of the coil and furnace must face the same direction.
- If the furnace is installed in a residential garage, position the furnace so that the burners and ignition source are located not less than 18 inches (457 mm) above the floor. Protect the furnace from physical damage by vehicles.
- If the furnace is installed horizontally, ensure the access doors are not on the “up/top” or “down/bottom” side of the furnace.
- Do not connect this furnace to a chimney flue that serves a separate appliance designed to burn solid fuel.
- On Counterflow Installations, the air conditioning coil must be downstream on the supply (positive) side of the furnace heat exchanger.
- *Counterflow Installation over a noncombustible floor.* Before setting the furnace over the plenum opening, ensure the surface around the opening is smooth and level. A tight seal should be made between the furnace base and floor by using a silicone rubber caulking compound or cement grout.
- *Counterflow Installation over a combustible floor.* If installation over a combustible floor becomes necessary, use an accessory subbase (see Specification Sheet applicable for your model for details.) A special accessory subbase must be used for upright counterflow unit installations over any combustible material including wood. Refer to subbase instructions for installation details. Follow the instructions with the subbase for proper installation. Do not install the furnace directly on carpeting, tile, or other combustible material other than wood flooring.

NOTE: The subbase will not be required if an air conditioning coil is installed between the supply air opening on the furnace and the floor.

Clearances and Accessibility

NOTES:

- For servicing or cleaning, a 24” front clearance is required.
- Unit connections (electrical, flue and drain) may necessitate greater clearances than the minimum clearances listed above.
- In all cases, accessibility clearance must take precedence over clearances from the enclosure where accessibility clearances are greater.

NOTES:

- For servicing or cleaning, a 24” front clearance is required.
- Unit connections (electrical, flue and drain) may necessitate greater clearances than the minimum clearances listed above.
- In all cases, accessibility clearance must take precedence over clearances from the enclosure where accessibility clearances are greater.

Clearance in accordance with local installation codes, the requirements of the gas supplier and the manufacturer’s installation instructions.

Dégaugement conforme aux codes d’installation locaux, aux exigences du fournisseur de gaz et aux instructions d’installation du fabricante.

Installations must adhere to the clearances to combustible materials to which this furnace has been design certified. The minimum clearance information for this furnace is provided on the unit's clearance label. These clearances must be permanently maintained. Clearances must also accommodate an installation's gas, electrical, and drain trap and drain line connections. If the alternate combustion air intake or vent/flue connections are used additional clearance must be provided to accommodate these connections. Refer to *Vent/Flue Pipe and Combustion Air Pipe* for details.

NOTE: In addition to the required clearances to combustible materials, a minimum of 24 inches service clearance must be available in front of the unit.

*MEC96 MINIMUM CLEARANCES TO COMBUSTIBLE MATERIALS (INCHES)						
POSITION*	SIDES	REAR	FRONT	BOTTOM	FLUE	TOP
Upflow	0"	0"	3"	C	0"	1"
Horizontal	6"	0"	3"	C	0"	6"

C = If placed on combustible floor, floor MUST be wood only.

*CEC96 MINIMUM CLEARANCES TO COMBUSTIBLE MATERIALS (INCHES)						
POSITION*	SIDES	REAR	FRONT	BOTTOM	FLUE	TOP
Counterflow	0"	0"	3"	NC	0"	1"
Horizontal	6"	0"	3"	C	0"	6"

C = If placed on combustible floor, floor MUST be wood only.

NC = For installation on non-combustible floors only. A combustible subbase must be used for installations on combustible flooring.

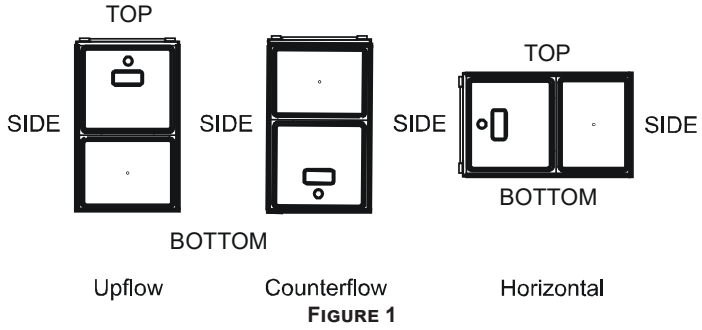

Figure 1

A furnace installed in a confined space (i.e., a closet or utility room) must have two ventilation openings with a total minimum free area of 0.25 square inches per 1,000 BTU/hr of furnace input rating. Refer to Specification Sheet applicable to your model for minimum clearances to combustible surfaces. One of the ventilation openings must be within 12 inches of the top; the other opening must be within 12 inches of the bottom of the confined space. In a typical construction, the clearance between the door and door frame is usually adequate to satisfy this ventilation requirement.

WARNING

CARBON MONOXIDE POISONING HAZARD

Failure to follow the steps outlined below for each appliance connected to the venting system being placed into operation could result in carbon monoxide poisoning or death.

The following steps shall be followed with each appliance connected to the venting system placed in operation, while any other appliances connected to the venting system are not in operation:

1. **Seal any unused openings in the venting system.**
2. **Inspect the venting system for proper size and horizontal pitch, as required by the National Fuel Gas Code, ANSI Z223.1 or the Natural Gas and Propane Installation Code, CSA B149.1-15 and these instructions. Determine that there is no blockage or restriction, leakage, corrosion and other deficiencies which could cause an unsafe condition.**
3. **As far as practical, close all building doors and windows and all doors between the space in which the appliance(s) connected to the venting system are located and other spaces of the building.**
4. **Close fireplace dampers.**
5. **Turn on clothes dryers and any appliance not connected to the venting system. Turn on any exhaust fans, such as range hoods and bathroom exhausts, so they shall operate at maximum speed. Do not operate a summer exhaust fan.**
6. **Follow the lighting instructions. Place the appliance being inspected in operation. Adjust thermostat so appliance shall operate continuously.**
7. **Test for spillage from draft hood appliances at the draft hood relief opening after 5 minutes of main burner operation. Use the flame of a match or candle.**
8. **If improper venting is observed during any of the above tests, the venting system must be corrected in accordance with the National Fuel Gas Code ANSI Z223.1/NFPA 54 and/or National Gas and Propane Installation Code CSA B149.1-15.**
9. **After it has been determined that each appliance connected to the venting system properly vents when tested as outlined above, return doors, windows, exhaust fans, fireplace dampers and any other gas burning appliance to their previous conditions of use.**

AVERTISSEMENT

RISQUE D'INTOXICATION AU MONOXYDE DE CARBONE

SI LES ÉTAPES DÉCRITES CI-DESSOUS NE SONT PAS SUIVIES POUR CHACUN DES APPAREILS RACCORDÉS AU SYSTÈME DE VENTILATION AU MOMENT DE SA MISE EN MARCHE, CELA PEUT ENTRAÎNER UNE INTOXICATION AU MONOXYDE DE CARBONE OU LA MORT.

LES ÉTAPES SUIVANTES DOIVENT ÊTRE SUIVIES POUR CHACUN DES APPAREILS RACCORDÉS AU SYSTÈME DE VENTILATION AU MOMENT DE SA MISE EN MARCHE, ALORS QUE TOUS LES AUTRES APPAREILS RACCORDÉS AU SYSTÈME DE VENTILATION NE SONT PAS EN MARCHE :

1. **SCELLER TOUTES LES OUVERTURES INUTILISÉES DU SYSTÈME DE VENTILATION.**
2. **INSPECTER LE SYSTÈME DE VENTILATION AFIN DE VÉRIFIER SI LA TAILLE ET L'INCLINAISON PAR RAPPORT À L'HORIZONTALE SONT CONFORMES AUX EXIGENCES DU NATIONAL FUEL GAS CODE, ANSI Z223.1/NFPA 54 OU DU CODE D'INSTALLATION DU GAZ NATUREL ET DU PROPANE, CSA B149.1 ET À CES INSTRUCTIONS. VÉRIFIER QU'IL N'Y A PAS D'OBSTRUCTION OU DE RESTRICTION, DE FUITE, DE CORROSION ET D'AUTRES PROBLÈMES QUI POURRAIENT ENTRAÎNER UNE SITUATION DANGEREUSE.**
3. **SI POSSIBLE, FERMER TOUTES LES PORTES ET FENÊTRES DU BÂTIMENT AINSI QUE TOUTES LES PORTES SÉPARANT L'ENDROIT OÙ SE TROUVENT LES APPAREILS RACCORDÉS AU SYSTÈME DE VENTILATION ET LES AUTRES ZONES DU BÂTIMENT.**
4. **FERMER LE REGISTRE DES FOYERS.**
5. **METTRE LES SÉCHEUSES EN MARCHE AINSI QUE TOUS LES AUTRES APPAREILS QUI NE SONT PAS RACCORDÉS AU SYSTÈME DE VENTILATION. METTRE EN MARCHE TOUS LES VENTILATEURS DE TIRAGE, COMME CELUI DES HOTTES DE CUISINE ET DES SALLES DE BAINS, ET LES RÉGLER À LA PUISSANCE MAXIMALE. NE PAS METTRE EN MARCHE LES VENTILATEURS D'ÉTÉ.**
6. **SUIVRE LES INSTRUCTIONS D'ALLUMAGE. METTRE EN MARCHE L'APPAREIL SOUMIS À L'INSPECTION. RÉGLER LE THERMOSTAT DE MANIÈRE À CE QUE L'APPAREIL FONCTIONNE EN CONTINU.**
7. **VÉRIFIER LA PRÉSENCE DE FUITE AU NIVEAU DE L'OUVERTURE DU COUPE-TIRAGE DES APPAREILS QUI EN SONT DOTÉS APRÈS 5 MINUTES DE FONCTIONNEMENT DU BRÛLEUR PRINCIPAL. UTILISER LA FLAMME D'UNE ALLUMETTE OU D'UNE BOUGIE.**
8. **SI UN PROBLÈME DE VENTILATION EST OBSERVÉ PENDANT L'UN DES ESSAIS DÉCRITS CI-DESSUS, DES CORRECTIFS DOIVENT ÊTRE APPORTÉS AU SYSTÈME DE VENTILATION CONFORMÉMENT AU NATIONAL FUEL GAS CODE, ANSI Z223.1/NFPA 54 ET (OU) AU CODE D'INSTALLATION DU GAZ NATUREL ET DU PROPANE, CSA B149.1.**
9. **UNE FOIS QU'IL A ÉTÉ DÉTERMINÉ QUE CHAQUE APPAREIL RACCORDÉ AU SYSTÈME DE VENTILATION FONCTIONNE CORRECTEMENT AU MOYEN DES ESSAIS DÉCRITS CI-DESSUS, LES PORTES, LES FENÊTRES, LES VENTILATEURS, LES REGISTRES DE FOYER ET TOUS LES AUTRES APPAREILS DE COMBUSTION ALIMENTÉS AU GAZ DOIVENT ÊTRE REMIS DANS LEUR ÉTAT INITIAL.**

EXISTING FURNACE REMOVAL

NOTE: When an existing furnace is removed from a venting system serving other appliances, the venting system may be too large to properly vent the remaining attached appliances.

The following vent testing procedure is reproduced from the **American National Standard/National Standard of Canada for Gas-Fired Central Furnaces ANSI Z21.47, CSA-2.3 latest edition Section 1.23.1.**

The following steps shall be followed with each appliance connected to the venting system placed in operation, while any other appliances connected to the venting system are not in operation:

1. Seal any unused openings in the venting system.
2. Inspect the venting system for proper size and horizontal pitch, as required by the National Fuel Gas Code, ANSI Z223.1 or the Natural Gas and Propane Installation Code, CSA B149.1-15 and these instructions. Determine that there is no blockage or restriction, leakage, corrosion and other deficiencies which could cause an unsafe condition.
3. As far as practical, close all building doors and windows and all doors between the space in which the appliance(s) connected to the venting system are located and other spaces of the building.
4. Close fireplace dampers.
5. Turn on clothes dryers and any appliance not connected to the venting system. Turn on any exhaust fans, such as range hoods and bathroom exhausts, so they shall operate at maximum speed. Do not operate a summer exhaust fan.
6. Follow the lighting instructions. Place the appliance being inspected in operation. Adjust thermostat so appliance shall operate continuously.
7. Test for spillage from draft hood appliances at the draft hood relief opening after 5 minutes of main burner operation. Use the flame of a match or candle.
8. If improper venting is observed during any of the above tests, the venting system must be corrected in accordance with the National Fuel Gas Code ANSI Z223.1/NFPA 54 and/or National Gas and Propane Installation Code CSA B149.1-15.
9. After it has been determined that each appliance connected to the venting system properly vents when tested as outlined above, return doors, windows, exhaust fans, fireplace dampers and any other gas burning appliance to their previous conditions of use.

If resizing is required on any portion of the venting system, use the appropriate table in Appendix G in the latest edition of the National Fuel Gas Code ANSI Z223.1 and/or CSA B149.1-15 Installation Codes.

Thermostat Location

The thermostat should be placed approximately five feet from the floor on a vibration-free, inside wall in an area having good air circulation. Do not install the thermostat where it may be influenced by any of the following:

- Drafts, or dead spots behind doors, in corners, or under cabinets.
- Hot or cold air from registers.
- Radiant heat from the sun.
- Light fixtures or other appliances.
- Radiant heat from a fireplace.
- Concealed hot or cold water pipes, or chimneys.
- Unconditioned areas behind the thermostat, such as an outside wall.

*Consult the instructions packaged with the thermostat for mounting instructions and further precaution*s.

COMBUSTION & VENTILATION REQUIREMENTS

WARNING

To avoid property damage, personal injury or death, sufficient fresh air for proper combustion and ventilation of flue gases must be supplied. Most homes require outside air be supplied into the furnace area.

Improved construction and additional insulation in buildings have reduced heat loss by reducing air infiltration and escape around doors and windows. These changes have helped in reducing heating/cooling costs but have created a problem supplying combustion and ventilation air for gas fired and other fuel burning appliances. Appliances that pull air out of the house (clothes dryers, exhaust fans, fireplaces, etc.) increase the problem by starving appliances for air.

House depressurization can cause back drafting or improper combustion of gas-fired appliances, thereby exposing building occupants to gas combustion products that could include carbon monoxide.

If this furnace is to be installed in the same space with other gas appliances, such as a water heater, ensure there is an adequate supply of combustion and ventilation air for the other appliances. Refer to the latest edition of the National Fuel Gas Code NFPA 54/ANSI Z223.1 or CAN/CSA B149.1-15 Installation Codes or applicable provisions of the local building codes for determining the combustion air requirements for the appliances.

Most homes will require outside air be supplied to the furnace area by means of ventilation grilles or ducts connecting directly to the outdoors or spaces open to the outdoors such as attics or crawl spaces.

INSTALLATION POSITIONS

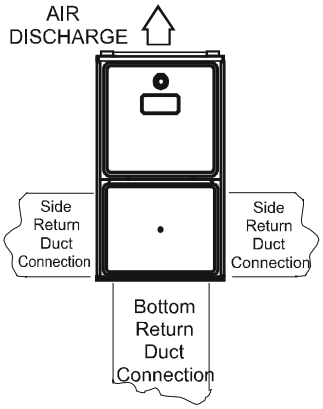

UPFLOW UPRIGHT

Figure 2A

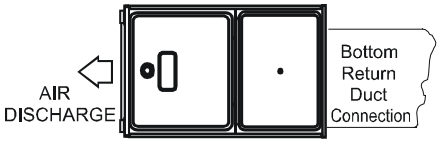

UPFLOW HORIZONTAL LEFT AIR DISCHARGE

Figure 2B

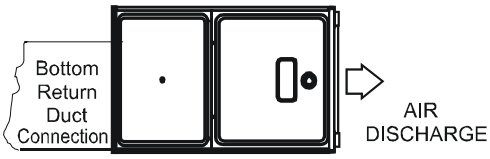

UPFLOW HORIZONTAL RIGHT AIR DISCHARGE

Figure 2C

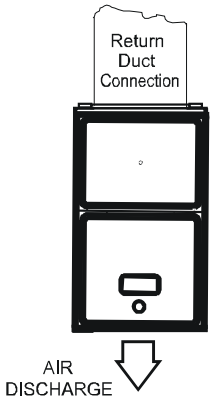

Counterflow

Figure 2D

Recommended Installation Positions

*MEC96 models may be installed upflow or horizontally with left or right side down. *CEC96 models may be installed down flow or horizontally with left or right side down. Do not install this furnace on its back. For *upright upflow* furnaces, return air ductwork may be attached to the side panel(s) and/or basepan. For *horizontal upflow* furnaces, return air ductwork must be attached to the basepan. For both *upright or horizontal counterflow* furnaces, return ductwork must be attached to the basepan (top end of the blower compartment). **NOTE:** Ductwork must never be attached to the back of the furnace.
Refer to "Recommended Installation Positions" figure for appropriate installation positions, ductwork connections, and resulting airflow arrangements.

HORIZONTAL APPLICATIONS & CONSIDERATIONS

When installing a furnace horizontally, additional consideration must be given to the following:

Furnace Suspension

If suspending the furnace from rafters or joists, use ⅜" threaded rod and 2"x2"x⅛" angle iron as shown in the following diagram. The length of rod will depend on the application and the clearances necessary. If the furnace is installed in a crawl space it must be suspended from the floor joist or supported by a concrete pad. Never install the furnace on the ground or allow it to be exposed to water.

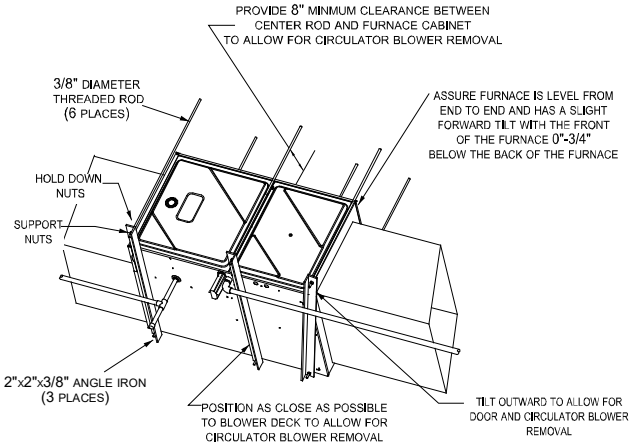

Figure 3

Front Cover Pressure Switch Tube Location

When a furnace is installed horizontally with left side down, the front cover pressure switch tube must be re-located to he lower port of the collector box cover.

1. Remove tube from front cover pressure switch and collector box cover.
2. Remove rubber plug from bottom collector box port and install on top of collector box port.
3. Locate 24'' x ¼'' tube in bag assembly.
4. Install one end on front cover pressure switch.
5. Route tube to lower port on collector box cover and cut off excess tubing.

Drain Trap and Lines

In horizontal applications the condensate drain trap is secured to the furnace side panel, suspending it below the furnace. A minimum clearance of 5.5" below the furnace must be provided for the drain trap. Additionally, the appropriate downward piping slope must be maintained from the drain trap to the drain location. Refer to *Condensate Drain Trap and Lines* for further details. If the drain trap and drain line will be exposed to temperatures near or below freezing, adequate measures must be taken to prevent condensate from freezing.

Horizontal Furnace Leveling

Leveling ensures proper condensate drainage from the heat exchanger. For proper flue pipe drainage, the furnace must be level lengthwise from end to end. The furnace should have a slight tilt from back to front with the access doors downhill from the back panel approximately ½ to ¾ inches. The slight tilt allows the heat exchanger condensate, generated in the recuperator coil, to flow forward to the recuperator coil front cover.

Alternate Electrical and Gas Line Connections

This furnace has provisions allowing for electrical and gas line connections through either side panel. In horizontal applications the connections can be made either through the "top" or "bottom" of the furnace.

Drain Pan

A drain pan must be provided if the furnace is installed above a conditioned area. The drain pan must cover the entire area under the furnace (and air conditioning coil if applicable).

Freeze Protection

Refer to *Horizontal Applications and Conditions - Drain Trap and Lines.*

PROPANE GAS/HIGH ALTITUDE INSTALLATIONS

WARNING

Possible property damage, personal injury or death may occur if the correct conversion kits are not installed. The appropriate kits must be applied to ensure safe and proper furnace operation. All conversions must be performed by a qualified installer or service agency.

This furnace is shipped from the factory configured for natural gas at standard altitude. Propane gas installations require an orifice and spring change to compensate for the energy content difference between natural and propane gas.

High altitude installations may require both a pressure switch and an orifice/spring change. These changes are necessary to compensate for the natural reduction in the density of both the gas fuel and the combustion air at higher altitude. For furnaces being converted to LP gas, it is strongly recommended that a LPLP03 kit also be installed. The use of this kit will prevent the furnace from firing when the LP gas supply pressure is too low to support proper combustion.

INSTALLATION OF THIS FURNACE AT ALTITUDES ABOVE 7000 FT (2134M) SHALL BE MADE IN ACCORDANCE WITH THE LISTED HIGH ALTITUDE CONVERSION KIT AVAILABLE WITH THIS FURNACE.

L'INSTALLATION DE CE GÉNÉRATEUR DE CHALEUR À DES ALTITUDES SUPÉRIEURES À 7000 PI (2134M) DOIT ÊTRE EFFECTUÉE CONFORMÉMENT AUX INSTRUCTIONS ACCOMPAGNANT LA TROUSSE DE CONVERSION POUR HAUTE ALTITUDE FOURNIE AVEC CET APPAREIL.

For installations above 7000 feet, please refer to the furnace Specification Sheets for required kit(s).

Contact the distributor for a tabular listing of appropriate manufacturer's kits for propane gas and/or high altitude installations. The indicated kits must be used to insure safe and proper furnace operation. All conversions must be performed by a qualified installer, or service agency.

GAS	ALTITUDE	KIT	ORIFICE	MANIFOLD PRESSURE		PRESSURE SWITCH CHANGE
				HIGH STAGE	LOW STAGE	
NATURAL	0 - 7000	NONE	#45 (1)	3.5" w.c.	1.9" w.c.	NONE
			#50 (2)			
PROPANE		LPM-08* (1)	1.25MM (1)	10.0" w.c.	6.0" w.c.	NONE
		LPM-30* (2)	#57 (2)			

*supports both Honeywell and White-Rodgers 2-stage valves
(1) FOR USE WITH ALL MODELS EXCEPT *MEC960303AN and *MEC960302BN
(2) FOR USE WITH ONLY *MEC960302BN MODEL

VENT PIPE & COMBUSTION AIR

WARNING

FAILURE TO FOLLOW THESE INSTRUCTIONS CAN RESULT IN BODILY INJURY OR DEATH. CAREFULLY READ AND FOLLOW ALL INSTRUCTIONS GIVEN IN THIS SECTION.

WARNING

UPON COMPLETION OF THE FURNACE INSTALLATION, CAREFULLY INSPECT THE ENTIRE FLUE SYSTEM BOTH INSIDE AND OUTSIDE OF THE FURNACE TO ASSURE IT IS PROPERLY SEALED. LEAKS IN THE FLUE SYSTEM CAN RESULT IN SERIOUS PERSONAL INJURY OR DEATH DUE TO EXPOSURE TO FLUE PRODUCTS, INCLUDING CARBON MONOXIDE.

This manual will refer to the pipe that discharges products of combustion to the outdoors as the "vent" pipe or "flue" pipe. The pipe that supplies air for combustion to the furnace will be referred to as the "intake" pipe or "combustion air" pipe.

This furnace is dual certified and may be installed as a non-direct vent (single pipe) or direct vent (dual pipe) appliance.

MATERIALS - INSTALLATIONS IN THE U.S.A

PVC, CPVC, or ABS pipe & fittings are typically used as venting and intake pipe materials. All 90° elbows must be medium or long radius types. A medium radius elbow should measure ~3-1/16" minimum from the plane of one opening to the center line of the other opening for 2" diameter pipe, and ~4-9/16" minimum for 3" pipe.

In addition to these materials, Innoflue® by Centrotherm Eco Systems and PolyPro® by M&G Duravent are also approved vent and combustion air materials for installations in the U.S.A. Manufacturers Installation instructions for these products must be followed. These products have specific instructions for installing, joining and terminating. Do not mix materials or components of one manufacturer with materials or components of another manufacturer. Refer to the following chart for plastic pipe & fittings specifications

MATERIALS - INSTALLATIONS IN CANADA

All installations in Canada must conform to the requirements of CAN/CSA B149.1-15 code. All vent components, including primer and cement, must be listed to ULC S636. The certified pipe and fittings should be clearly marked with the ULC standard "S636". The primer and cement used must be of the same manufacturer as the vent system. For Royal Pipe System 636; use GVS-65 Primer (Purple) and GVS-65 PVC Solvent Cement. For IPEX System 636, use PVC/CPVC Primer, Purple or clear. Use PVC Solvent cement (Gray). For Canadian installations, ABS may be used as a combustion air pipe only. ABS is not an approved vent material in Canada. If ABS is used as a combustion air pipe, it must be CSA certified. Always follow the manufacturer's instructions in the use of primer and cement. Do not use primer and cement around potential sources of ignition. Do not use primer or cement beyond its expiration date.

MATERIALS AND JOINING METHODS

WARNING

TO AVOID BODILY INJURY, FIRE OR EXPLOSION, SOLVENT CEMENTS MUST BE KEPT AWAY FROM ALL IGNITION SOURCES (I.E., SPARKS, OPEN FLAMES, AND EXCESSIVE HEAT) AS THEY ARE COMBUSTIBLE LIQUIDS. AVOID BREATHING CEMENT VAPORS OR CONTACT WITH SKIN AND/OR EYES.

VENTING MATERIAL REQUIREMENTS	
PVC	ASTM STANDARD
SCHEDULE 40 PIPE	D1785
SCHEDULE 40 CELLULAR CORE PIPE	F891
SDR 21 OR 26 PIPE	D2241
FITTINGS	D2466
ABS	
SCHEDULE 40 PIPE	D1527
SCHEDULE 40 CELLULAR CORE PIPE	F628
FITTINGS	D2468
CPVC	
SCHEDULE 40 PIPE	F441
SDR 21 OR 26 PIPE	F442
FITTINGS	F438
POLYPROPYLENE	
INNOFLUE® (CENTROTHERM)	
POLYPRO® (DURAVENT)	
PRIMER & SOLVENT CEMENT	
PVC PRIMER	F656
CPVC PRIMER	F656
PVC SOLVENT CEMENT	D2564
CPVC SOLVENT CEMENT	F493
ABS SOLVENT CEMENT	D2235
ABS / PVC / CPVC ALL PURPOSE CEMENT (FOR PIPE & FITTINGS OF THE SAME MATERIAL)	D2564, D2235, F493
TRANSITION CEMENT FOR ABS TO PVC or CPVC	D3188
INSTALLATIONS IN CANADA	
PVC & CPVC PIPE & FITTINGS	ULC S636
PVC & CPVC SOLVENT CEMENT	
TRANSITION CEMENT	
INNOFLUE® (CENTROTHERM)	
POLYPRO® (DURAVENT)	

WARNING

Upon completion of the furnace installation, carefully inspect the entire flue system both inside and outside of the furnace to assure it is properly sealed. Leaks in the flue system can result in serious personal injury or death due to exposure to flue products, including carbon monoxide.

WARNING

Failure to follow these instructions can result in bodily injury or death. Carefully read and follow all instructions given in this section.

WARNING

To avoid bodily injury, fire or explosion, solvent cements must be kept away from all ignition sources (i.e., sparks, open flames, and excessive heat) as they are combustible liquids. Avoid breathing cement vapors or contact with skin and/or eyes.

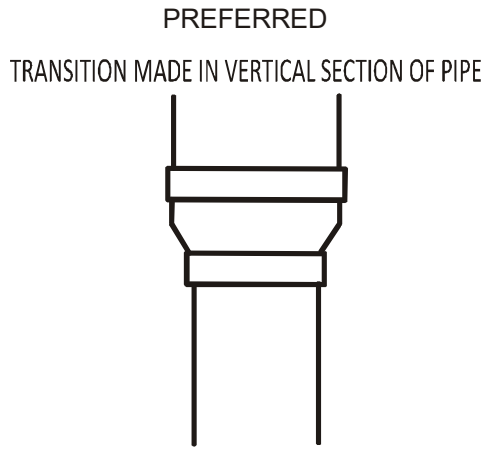

Figure 4

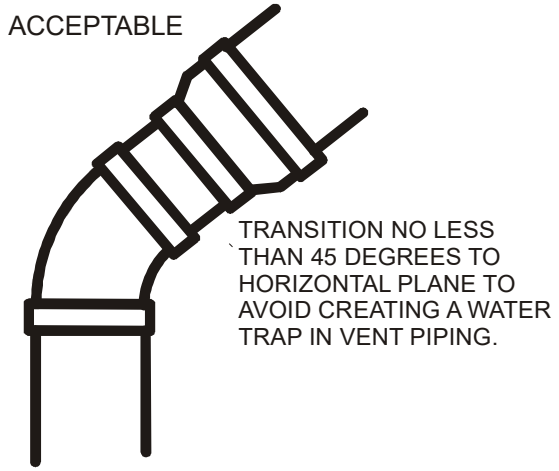

Figure 5

Figure 6

Termination Locations

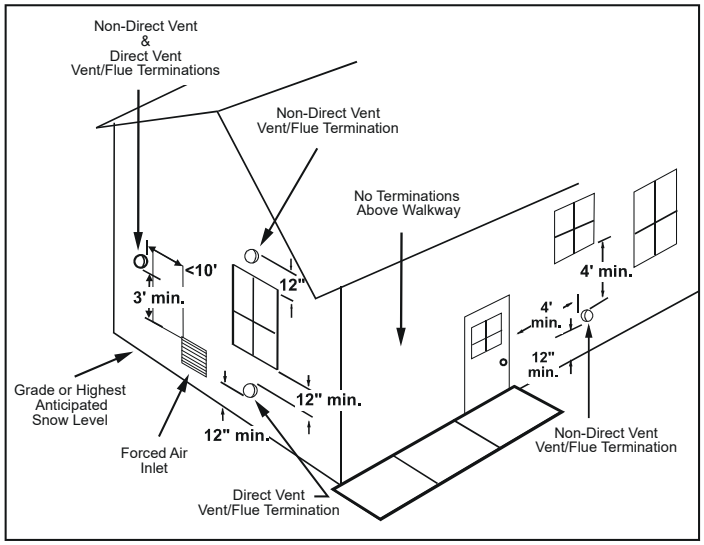

Vent Clearances
Figure 7

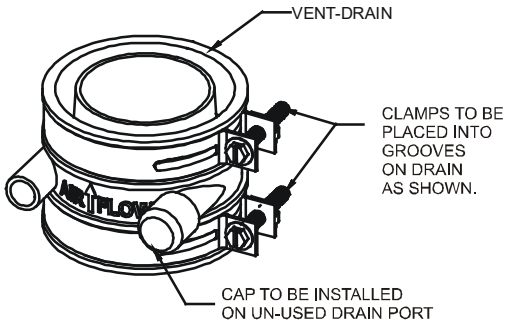

RF000142 Coupling
Figure 8

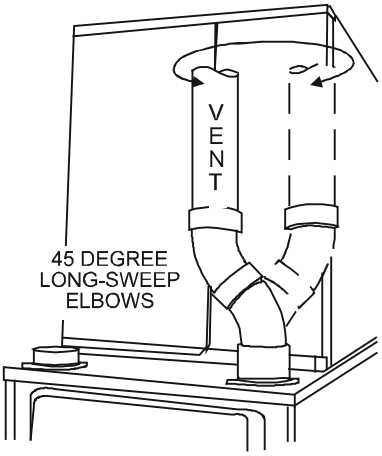

Figure 9

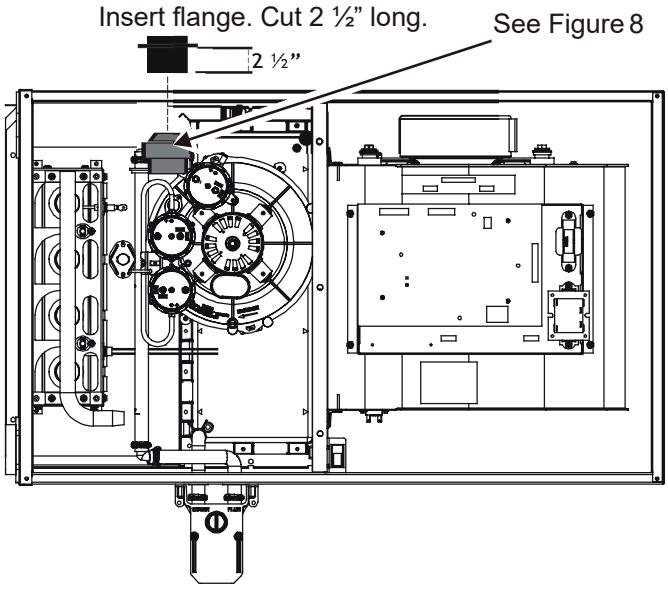

Figure 10

WARNING

Edges of sheet metal holes may be sharp. Use gloves as a precaution when removing hole plugs.

*MEC96/*CEC96 Direct Vent (2 - Pipe) and Non-Direct Vent (1- Pipe)									
Maximum Allowable Length of Vent/Flue Pipe									
MODEL	Pipe Size (in.)	Number of Elbows							
		1	2	3	4	5	6	7	8
*MEC960303AN & *MEC960403AN	2	75	70	65	60	55	50	45	40
	3	114	107	100	93	86	79	72	65
*MEC960603AN	2	75	70	65	60	55	50	45	40
	3	114	107	100	93	86	79	72	65
*MEC960302BN & *MEC960402BN	2	100	95	90	85	80	75	70	65
	3	168	161	154	147	140	133	126	119
*MEC960603BN^	2	50	45	40	35	30	25	20	15
	3	143	136	129	122	115	108	101	94
*MEC960803BN	2	60	55	50	45	40	35	30	25
	3	113	106	99	92	85	78	71	64
*MEC960804CN	2	60	55	50	45	40	35	30	25
	3	120	113	106	99	92	85	78	71
*MEC961004CN	2	45	40	35	30	25	20	15	10
	3	103	96	89	82	75	68	61	54
*MEC961005CN	2	45	40	35	30	25	20	15	10
	3	151	144	137	130	123	116	109	102
*MEC961205DN	3	185	178	171	164	157	150	143	136
*CEC960403BN	2	100	95	90	85	80	75	70	65
	3	110	103	96	89	82	75	68	61
*CEC960603BN	2	45	40	35	30	25	20	15	10
	3	110	103	96	89	82	75	68	61
*CEC960803BN	2	35	30	25	20	15	10	5	NA
	3	103	96	89	82	75	68	61	54
*CEC961005CN	2	45	40	35	30	25	20	15	10
	3	110	103	96	89	82	75	68	61

^ *MEC960603BN-add 45' of 2" pipe for upflow.

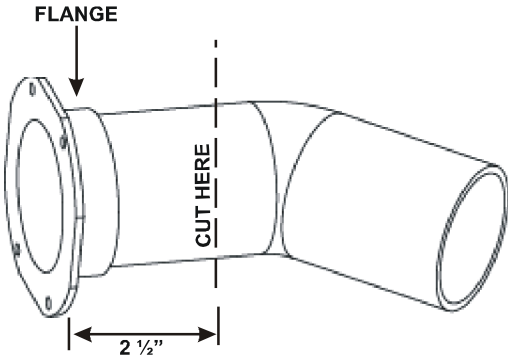

FIGURE 11

WARNING

THE RUBBER ELBOW IS NOT DESIGNED TO SUPPORT A LOAD. WHEN THE RUBBER ELBOW IS MOUNTED EXTERNALLY TO THE FURNACE CABINET, EXTREME CARE MUST BE TAKEN TO ADEQUATELY SUPPORT FIELD-SUPPLIED VENT/FLUE PIPING, AS DAMAGE CAN RESULT IN LEAKS CAUSING BODILY INJURY OR DEATH DUE TO EXPOSURE TO FLUE GASES, INCLUDING CARBON MONOXIDE.

Combustion Air Intake Options (See Figure 12)

The RF000142 coupling (Figure 8) can be secured directly to the furnace intake coupling if condensation is a concern. If the RF000142 is used on the combustion air inlet, it must be installed with the arrow pointing up. It should be noted, the combustion air will actually be moving in a direction opposite of the arrow on the RF000142 coupling. It must have a field supplied, trapped drain tube free-draining to proper condensate disposal location. A loop in the drain tube can serve as a trap. The unused RF000142 drain fitting should be capped. A tee installed in the intake pipe is also an acceptable method of catching condensation. It must have a field supplied, trapped drain tube or pipe, free-draining to proper condensate disposal location. A loop in the drain tube can serve as a trap.

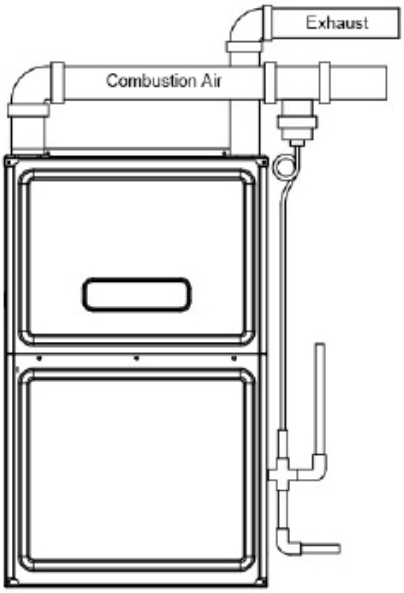

Combustion Air Intake Options
Figure 12

CAUTION

Be sure not to damage internal wiring or other components when reinstalling coupling and screws.

NOTE: For installations at or above 7,000 feet altitude, use 3" venting.

Vent/Flue Pipe Terminations

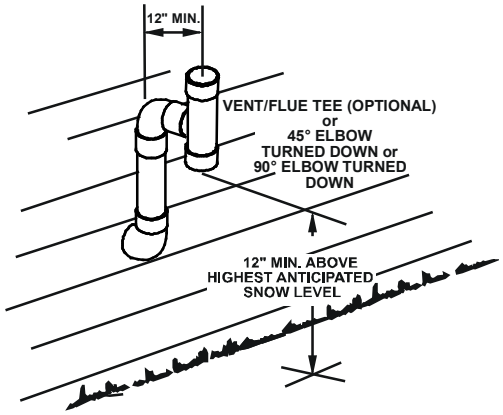

Horizontal Termination (Single Pipe)
Above Highest Anticipated Snow Level
Figure 13

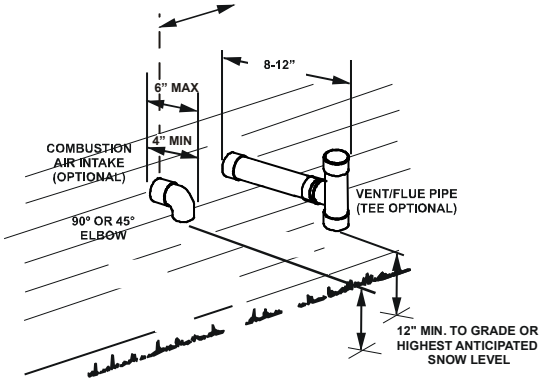

Standard Horizontal Terminations (Dual Pipe)
Figure 14

DOWN VENTING UPFLOW MODEL FURNACES ONLY

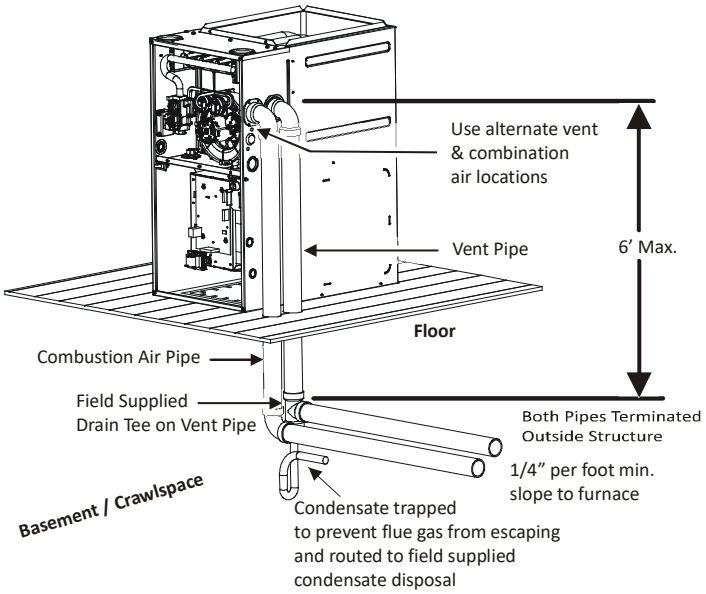

All piping and fittings must be joined per material manufacturers specifications to prevent separation and flue gas leaks.

Figure 15

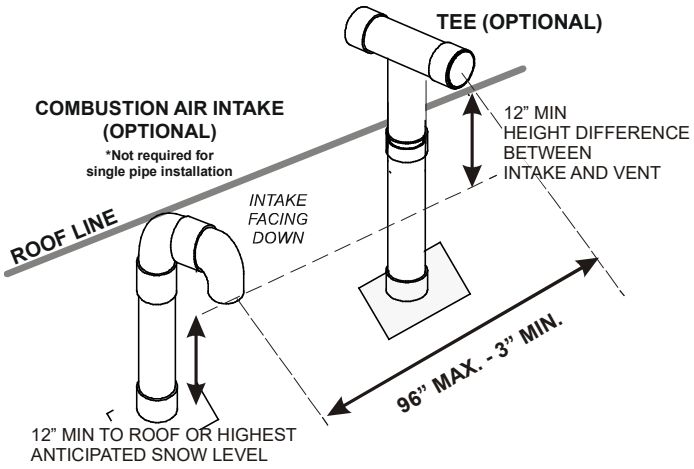

Figure 16

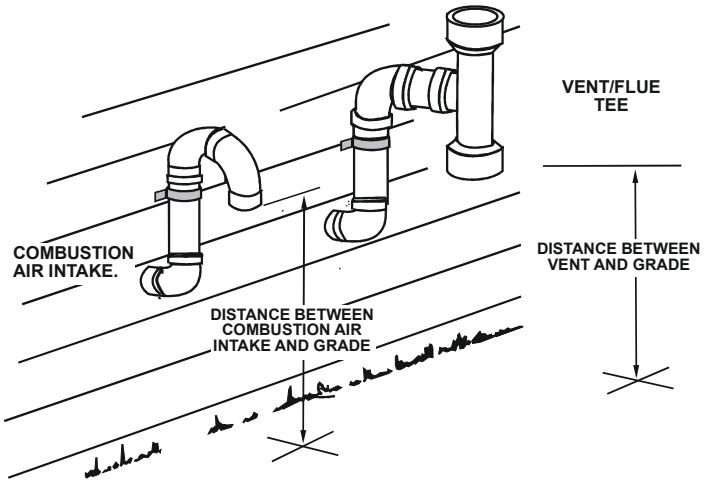

Figure 19

VENT PIPE TERMINATION OPTIONS

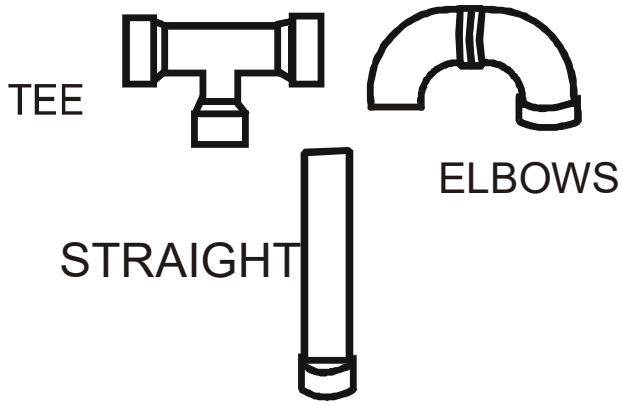

Direct Vent (Dual Pipe) Piping
Figure 17

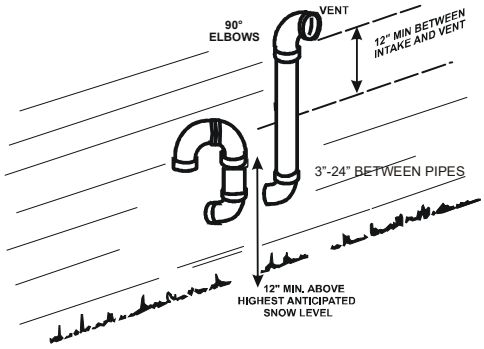

Combustion Air Intake may also be snorkeled to obtain 12" min ground clearance.

Alternate vent termination above anticipated snow level (dual pipe)
Figure 20

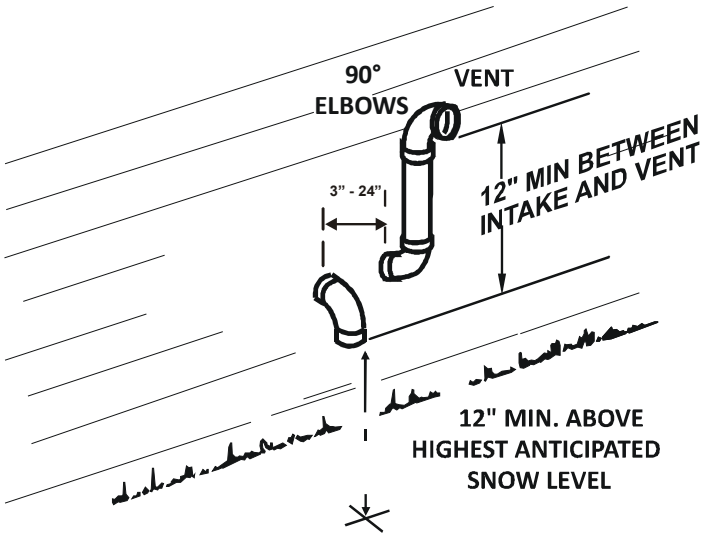

Alternate Horizontal Vent Termination (Dual Pipe)
Figure 18

Vent/Flue and Combustion Air Pipe Terminations

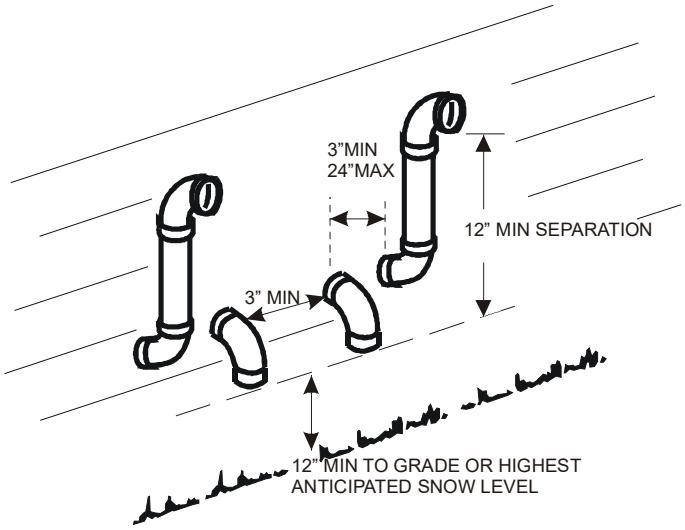

Termination of Multiple Direct Vent Furnaces
Figure 21

Vent/Intake Terminations For Installation of Multiple Direct Vent Furnaces

If more than one direct vent furnace is to be installed vertically through a common roof top, maintain the same minimum clearances between the exhaust vent and air intake terminations of adjacent units as with the exhaust vent and air intake terminations of a single unit.
If more than one direct vent furnace is to be installed horizontally through a common side wall, maintain the clearances as in the following figure. Always terminate all exhaust vent outlets at the same elevation and always terminate all air intakes at the same elevation.

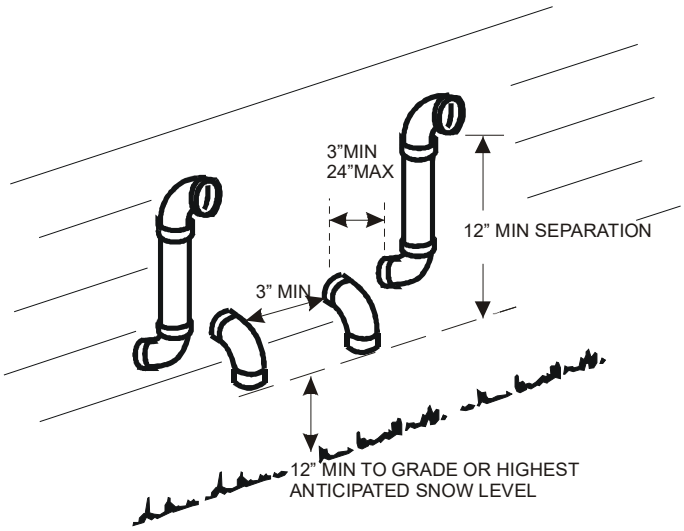

Termination of Multiple Direct Vent Furnaces
Figure 22

Concentric Vent Termination

Refer to the directions provided with the Concentric Vent Kit or IO-619 for installation specifications.

Side Wall Vent Kit

This kit is to be used with 2" or 3" direct vent systems. The vent kit must terminate outside the structure and may be installed with the intake and exhaust pipes located side-by-side or with one pipe above the other. These kits are **NOT** intended for use with single pipe (non-direct vent) installations.

Refer to the directions furnished with the Side Wall Vent Kit (p/n 0170K00000S or 0170K00001S) for installation specifications.

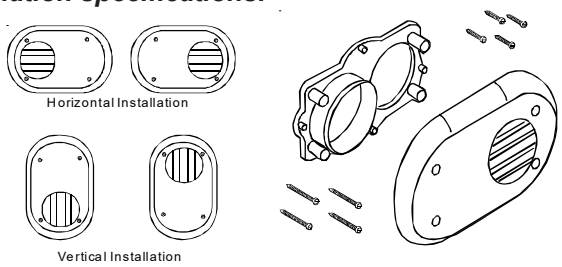

Side Wall Vent Kit
Figure 23

CONDENSATE DRAIN LINES & DRAIN TRAP

A condensing gas furnace achieves its high level of efficiency by extracting heat from the products of combustion to the point where condensation takes place. The condensate must be collected in the furnace drain trap and routed to an appropriate drain location in compliance with local and national codes.

Follow the bullets listed below when installing the drain system. Refer to the following sections for specific details concerning furnace drain trap installation and drain hose hook ups.

- The drain trap supplied with the furnace must be used.
- The drain trap must be primed at time of installation.
- The drain line between furnace and drain location must meet local and national codes.
- The drain line between furnace and drain location must maintain a ¼ inch per foot downward slope toward the drain.
- Do not trap the drain line in any other location than at the drain trap supplied with the furnace.
- If the drain line is routed through an area which may see temperatures near or below freezing, precautions must be taken to prevent condensate from freezing within the drain line.
- If an air conditioning coil is installed with the furnace, a common drain may be used. An open tee must be installed in the drain line, to relieve positive air pressure from the coil's plenum. This is necessary to prohibit any interference with the function of the furnace's drain trap.

General Drain Information

All furnace models come with a factory installed drain trap. For vertical installations, the trap will remain in the factory position. All furnace models installed horizontally require the trap to be relocated. Many drain hoses have a built–in grommet which will provide a cabinet seal when installed. See instructions below for your model and installation position.

NOTE: Both sides of the drain trap must be primed prior to initial furnace start up.

Field Supplied Drain

Drain the furnace and air conditioning coil if applicable, in compliance with code requirements. In horizontal installations, a field installed rubber coupling will allow the drain trap to be removed for cleaning. The drain trap must be primed before initial furnace start up. When an air conditioning coil drain is connected to the field supplied furnace drain, it must be vented with an open tee installed at a height no higher than the bottom of the furnace collector box to prevent air conditioning condensate from backing up into the furnace if the common drain became blocked.

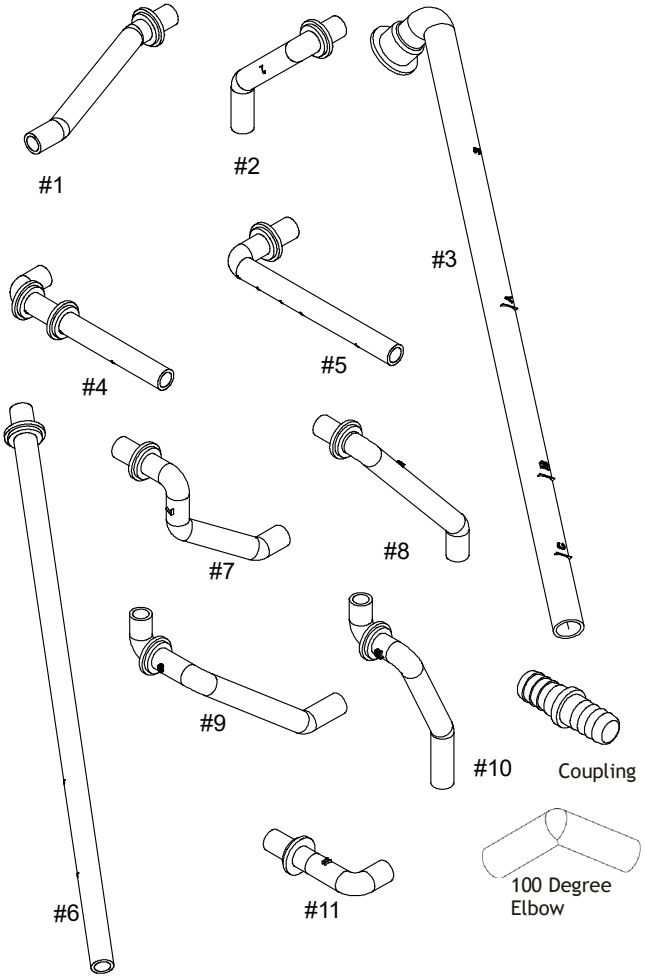

Figure 24

NOTE: Drain components shown for information purposes only. For horizontal installations, a Horizontal Drain Kit may be needed. Refer to the Specifications Sheet for kit part number.

WARNING

Edges of sheet metal holes may be sharp. Use gloves as a precaution when removing hole plugs.

WARNING

HIGH VOLTAGE

To avoid the risk of injury, electrical shock or death, the furnace must be electrically grounded in accordance with local codes or in their absence, with the latest edition of the National Electric Code.

WARNING

To avoid risk of injury, electrical shock or death, the furnace must be electrically grounded in accordance with local codes or, in their absence, with the latest edition of the National Electrical Code.

Upflow Model Installed Vertically

The trap and factory installed hoses remain as shipped. The furnace drain may exit either the right or left side of the furnace cabinet. Both sides of the cabinet have two .875" diameter holes which can be used interchangeably for drain and low voltage wiring purposes. If a higher drain exit is needed, a .875" diameter hole may be added in the area shown in Figure 25. Any unused cabinet opening must be sealed. Do not allow drain hose to sag or trap water.

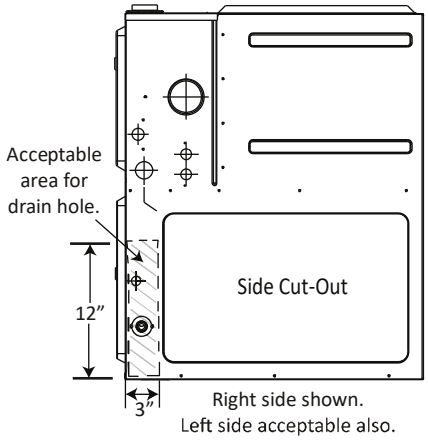

Figure 25

Drain Exiting Right Side

1. Locate and Install the 45º pipe / hose drain coupling from the outside of the cabinet (barbed end goes in the cabinet) through hole in the right side of the cabinet and secure with two field supplied #8 self-tapping screws (see Figure 26).
2. Locate the long drain hose #3 and cut at line "A".
3. Install large end of hose #3 to trap outlet and secure with 1.25" clamp.
4. Install smaller end of hose #3 on 45º elbow and secure with 1" clamp.
5. Refer to Field Supplied Drain section for instructions on field supplied / installed drain on outlet of furnace trap.

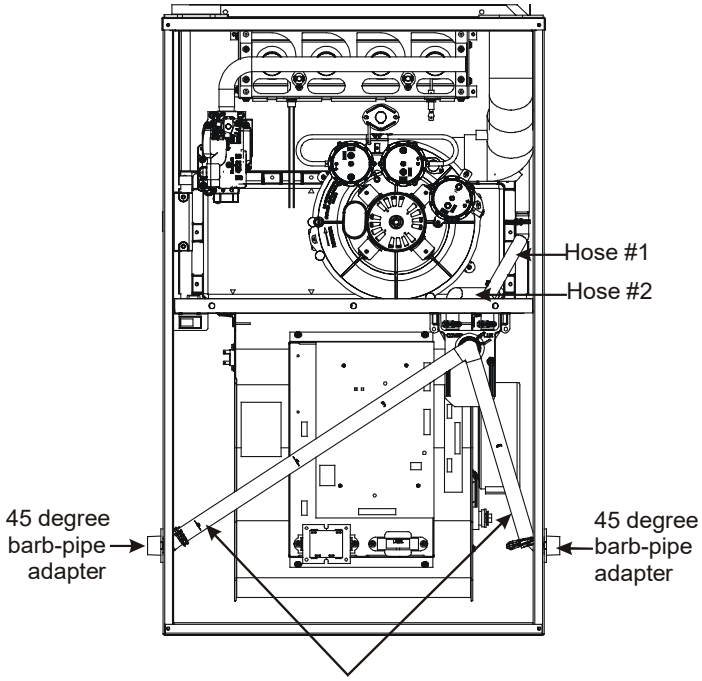

Figure 26

Drain Exiting Left Side

1. Install the 45 degree pipe / hose drain coupling from the outside of the cabinet (barbed end goes in the cabinet) through the hole in the left side of the cabinet and secure with two field supplied #8 self-tapping screws (see Figure 26).
2. Locate the long drain hose #3 and cut at “B” line for a 17.5” cabinet; cut at line “C” for a 21” cabinet; do not cut for a “D” width cabinet.
3. Install large end of hose #3 to trap outlet and secure with 1.25” clamp.
4. Install smaller end of hose #3 on 45º elbow and secure with 1” clamp.
5. Refer to Field Supplied Drain section for instructions on field supplied / installed drain on outlet of furnace trap.

Upflow Model Installed Horizontally with Right Side Down (See Figure 27)

Minimum 5 ½” clearance is required for the drain trap beneath the furnace.

1. Remove the clamps from both ends of the drain hoses.
2. Remove the two screws holding the drain trap to the blower deck.
3. Remove the trap and two hoses from the blower deck.
4. Remove the two plugs from the right side of the cabinet and install them in the blower deck.
5. (Draining the Vent Elbow) Locate hose #2 (factory installed) and cut 1” away from the 45 degree bend, discard the 45 degree section. Insert hose #2 from outside the cabinet through the cabinet drain hole nearest the top. Secure it to the barbed fitting in the elbow with a red clamp.
6. For models DM96VE0303AN, DM96VE0403AN and DM96VE0603AN; locate the hose #2 (factory installed) and cut 1.5” length from the end of the hose. Insert hose #2 from outside the cabinet through the cabinet drain’s hole nearest to the top. Secure it to the barbed fitting in the elbow with a red clamp.
7. (Draining the Collector Box) Install the non-grommet end of hose #11 from outside the cabinet in the bottom drain hole. Install on collector box and secure with a silver clamp.
8. Use two silver clamps and secure the hoses to drain trap. The trap outlet faces the front of the furnace. Secure the trap to the cabinet using two screws removed in step 2 by inserting the two screws through the large set of holes in the top mounting tabs of the trap into the two predrilled holes in the side of the cabinet.
9. Refer to Field Supplied Drain section for instructions on field supplied / installed drain on outlet of furnace trap.

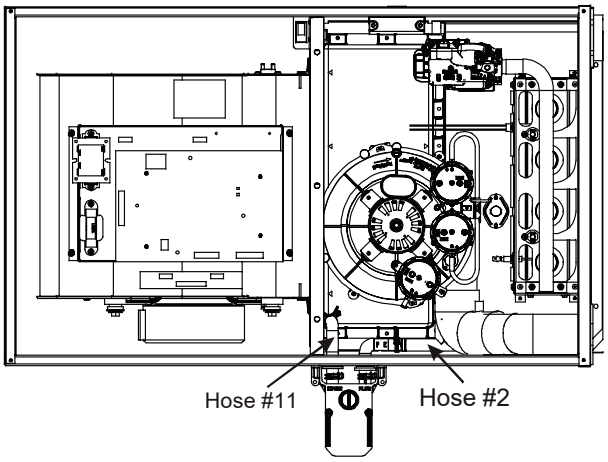

Figure 27

Upflow Model Installed Horizontally with Left Side Down (See Figure 28)

Minimum 5 ½” clearance is required for the drain trap beneath the furnace.

**Also see Front Cover Pressure Switch Tube Location on page 11.*

1. Remove the clamps from the two drain tubes on the trap.
2. Remove the two screws holding the drain trap to the blower deck.
3. Remove the trap and hoses from the blower deck.
4. Remove the two plugs from the left side of the cabinet and install them in the blower deck.
5. (Draining the Vent Elbow) Locate hose #6. Measuring from the non-grommet end; cut off and discard 1 ½” for a “D” width cabinet, 5” for a “C” width cabinet, 8 ½” for a “B” width cabinet.
6. Remove the rubber plug from vent – drain elbow side port. Place hose #6 on the vent – drain elbow side port and secure with a silver clamp.

7. ***Unused vent-drain elbow drip leg port must be sealed to prevent flue gases from escaping. Insert the rubber plug removed in Step 6 into the unused elbow drain port; Inserting a blunt tool such as a 3/16" Allen wrench into the center of the rubber plug will stretch the plug and allow complete insertion.***
8. Locate hose #5 and cut 3" from the non-grommet end. Discard the section without the grommet.
9. Insert the cut end of tube #5 through the lower cabinet drain hole.
10. Connect hose #6 & hose #5 using 100º elbow and secure with two red clamps.
11. (Draining the Collector Box) Remove cap from left side collector box drain port (bottom in horizontal left position) and install it on the right side (top) collector box drain port.
12. Install the non-grommet end of hose #11 from outside the cabinet in the upper drain hole. Install on collector box and secure with a silver clamp.
13. Use two silver clamps and secure the hoses to drain trap. The trap outlet faces the front of the furnace. Secure the trap to the cabinet using two screws removed in step 2 by inserting the two screws through the large set of holes in the top mounting tabs of the trap into the two predrilled holes in the side of the cabinet.
14. Refer to Field Supplied Drain section for instructions on field supplied / installed drain on outlet of furnace trap.

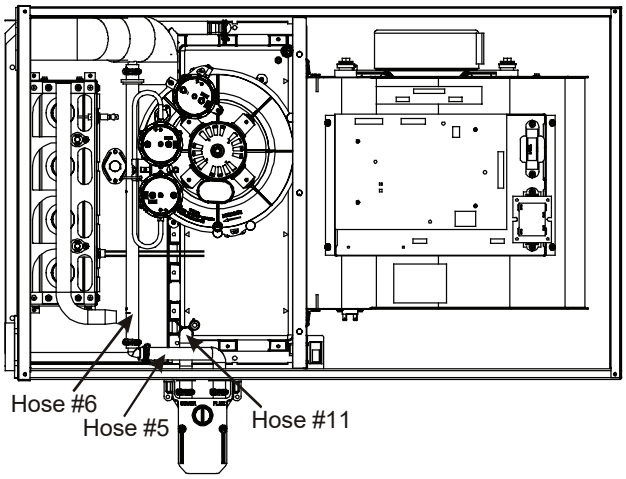

Figure 28

Upflow Model Installed Horizontally with Left Side Down - Alternate (See Figure 29)

**Also see Front Cover Pressure Switch Tube Location on page 11.*

1. (Draining the RF000142 Coupling) Locate hose #2 (factory installed). Cut off and discard the 45°radius end.
2. Install 90°radius end of hose #2 on RF000142 drain outlet and secure with a red clamp.
3. Insert coupling in hose #2 and secure with a red clamp.
4. Locate hose #5 and cut 3" from the non-grommet end. Discard the section without the grommet.
5. Insert the cut end of tube #5 through the lower cabinet drain hole.
6. Insert 100 degree elbow in the cut end of hose #5.
7. Locate hose #6. Using red clamps, connect between the coupling and 100 degree elbow, cutting off excess tubing.
8. (Draining the Collector Box) Remove cap from left side collector box drain port (bottom in horizontal left position) and install it on right side (top) collector box drain port.
9. Install the non-grommet end of hose #11 from outside the cabinet in the upper drain hole. Install on collector box and secure with a silver clamp.
10. Use two silver clamps and secure the hoses to drain trap. The trap outlet faces the front of the furnace. Secure the trap to the cabinet using two screws removed in step 2 by inserting the two screws through the large set of holes in the top mounting tabs of the trap into the two predrilled holes in the side of the cabinet.

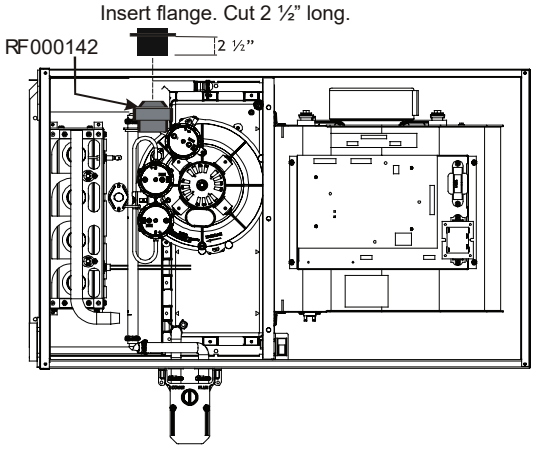

Figure 29

Counterflow Model Installed Vertically

The furnace drain may exit the right or left side of the furnace cabinet (left side preferred). Trap and factory installed hoses remain as shipped if the drain will exit the left side of the cabinet. Draining from the right side requires relocation of the trap to outside the cabinet.

Drain Exiting Left Side (See Figure 30)

1. Install a field supplied rubber coupling secured with a 1 ¼" clamp to enable removing the trap for future cleaning. Alternately, a PVC fitting may be glued on the trap outlet.
2. Install drain per local and National codes.

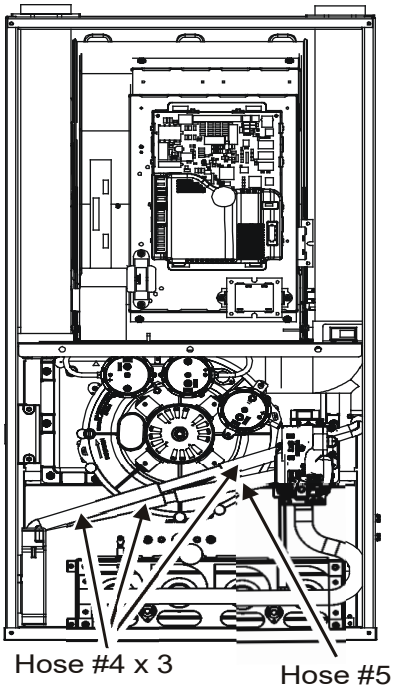

Figure 30

Drain Exiting Right Side (See Figure 31)

1. Remove hose clamps and hoses from trap.
2. Remove trap and factory installed drain tube assemblies.
3. (Draining the Vent Elbow) Insert the non-grommet end hose #10 into the cabinet back drain hole. Insert a coupling into the drip leg of the vent-drain elbow and secure with a silver clamp. Secure hose #10 on vent - drain elbow barb fitting with a silver clamp.
4. (Draining the Collector Box) Insert non-grommet end of hose #9 into the cabinet front drain hole and secure on collector box drain port with a silver clamp.
5. Mate the drain trap inlets to the hoses and secure with silver clamps.
6. Line up the trap mounting holes with the pre-drilled holes in the furnace and secure with 2 screws removed in step 2.
7. Refer to Field Supplied Drain section for instructions on field supplied / installed drain on outlet of furnace trap.

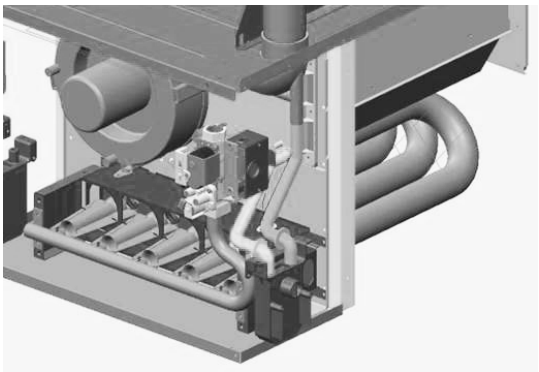

Figure 31

Counterflow Model Installed Horizontally with Right Side Down (See Figure 32)

Minimum 5 ½" clearance is required for the drain trap beneath the furnace.

NOTE: For horizontal installations, some of the required hoses are found in the factory-installed hose assemblies. Remove the hose clamps to obtain the respective hoses needed for installation, and install per the following directions.

1. Remove the drain trap and factory installed drain tube assemblies.
2. Remove two 1'' plugs from right side of cabinet.
3. (Draining the Collector Box) From outside the cabinet, insert the non-grommet end hose #7 into the back drain hole and secure to collector box drain port using a silver clamp.
4. (Draining the Vent Elbow) Insert the straight barbed coupling into the vent - drain elbow drip leg and secure with a red clamp.
5. From outside the cabinet, insert the non-grommet end of hose #8 into the front cabinet drain hole and secure on the vent - drain elbow barb fitting using a red clamp.
6. Place the drain hoses on the trap inlets and secure with silver clamps. The outlet of the trap must face the original bottom of furnace.
7. Using the two sheet metal screws provided in the cabinet, secure the trap to the furnace.
8. Refer to Field Supplied Drain section for instructions on field supplied/installed drain on outlet of furnace trap.

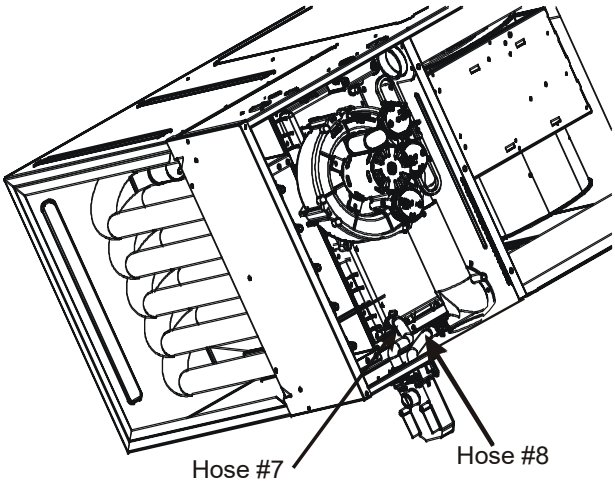

Figure 32

Counterflow Model Installed Horizontally with Left Side Down (See Figure 33)
**Also see Front Cover Pressure Switch Tube Location on page 11.*
Minimum 5 ½" clearance is required for the drain trap beneath the furnace.

NOTE: For horizontal installations, some of the required hoses are found in the factory-installed hose assemblies. Remove the hose clamps to obtain the respective hoses needed for installation, and install per the following directions.

1. Remove the factory installed drain trap and hose assemblies. Leave the 100° elbow inserted and clamped in the vent-drain elbow.
2. Remove two 1"plugs from left side of cabinet
3. (Draining the Collector Box) Remove the cap from the left side of the collector box drain port (bottom in horizontal left position) and install it on right side drain port.
4. Place radius end of hose #4 (factory installed) on the collector box drain port and secure with a silver clamp.
5. Insert hose #2 from outside the cabinet in the front drain hole.
6. Connect hose #4 & hose #2 together using a straight barbed coupling and two gold clamps (factory installed).
7. (Draining the Vent Elbow) Remove rubber plug from vent – drain elbow side port.
8. **The unused vent-drain elbow drip leg port must be plugged to prevent flue gases from escaping.** Insert rubber plug removed in step 7 into the 100°elbow. (Inserting a blunt tool such as a 3/16'' Allen wrench into the center of the rubber plug will stretch the plug and allow complete insertion)
9. Place radius end of hose #4 on the side port of vent – drain elbow and secure with a gold clamp.
10. Insert a ½" diameter PVC pipe (factory installed) into hose #4 and secure with a gold clamp.
11. Insert the non-grommet end of hose #5 (factory installed) from outside the cabinet in the back drain hole.
12. Insert 100º elbow in hose #5 and secure with a red clamp.
13. Locate hose #4 and cut a cut off a 4" straight section and discard the radius end.
14. Connect the 4" straight section of hose #4 to the 100º elbow and the PVC pipe and secure with red clamps.
15. Connect the hoses to the trap inlets and secure with silver clamps, drain trap outlet must point to the original bottom of the furnace.
16. Using the two sheet metal screws provided in the cabinet, secure the trap to the furnace.
17. Refer to Field Supplied Drain section for instructions on field supplied / installed drain on outlet of furnace trap.

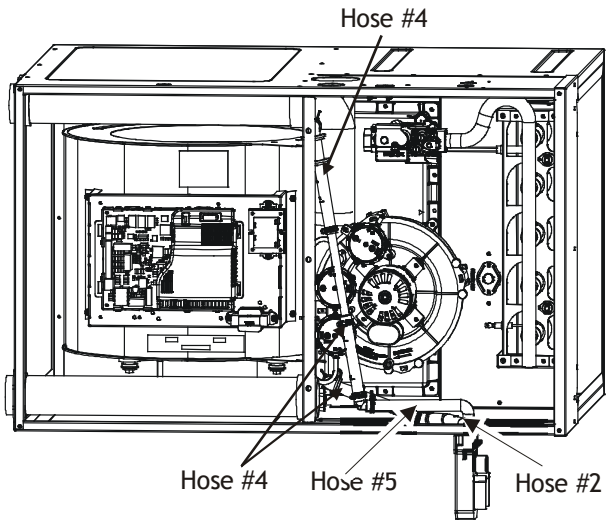

Figure 33

ELECTRICAL CONNECTIONS

Wiring Harness
The wiring harness is an integral part of this furnace. Wires are color coded for identification purposes. Refer to the wiring diagram for wire routings. If any of the original wire as supplied with the furnace must be replaced, it must be replaced with wiring material having a temperature rating of at least 105° C. Any replacement wiring must be a copper conductor.

WARNING

HIGH VOLTAGE
To avoid the risk of electrical shock, wiring the unit must be polarized and grounded.

WARNING

HIGH VOLTAGE
To avoid personal injury or death due to electrical shock, disconnect electrical power before servicing or changing any electrical wiring.

CAUTION

Label all wires prior to disconnection when servicing controls. Wiring errors can cause improper and dangerous operation. Verify proper operation after servicing.

115 Volt Line Connections

Before proceeding with electrical connections, ensure that the supply voltage, frequency, and phase correspond to that specified on the unit rating plate. Power supply to the furnace must be NEC Class 1, and must comply with all applicable codes. The furnace must be electrically grounded in accordance with local codes or, in their absence, with the latest edition of The National Electric Code, ANSI NFPA 70 and / or The Canadian Electric Code CSA C22.1.

Use a separate fused branch electrical circuit containing properly sized wire, and fuse or circuit breaker. The fuse or circuit breaker must be sized in accordance with the maximum overcurrent protection specified on the unit rating plate. An electrical disconnect must be provided at the furnace location.

Connect hot, neutral, and ground wires as shown in the wiring diagram located on the unit's blower door. Metal conduit is not considered a substitute for an actual ground wire to the unit. For direct vent applications, the cabinet opening to the junction box must be sealed air tight using either an UL approved bushing such as Heyco Liquid Tight or by applying non-reactive UL approved sealant to bushing.

Line polarity must be observed when making field connections. Line voltage connections can be made through either the right or left side panel. The furnace is shipped configured for a left side electrical connection with the junction box located inside the burner compartment. To make electrical connections through the opposite side of the furnace, the junction box must be relocated to the other side of the burner compartment prior to making electrical connections. To relocate the junction box, follow the steps shown below.

NOTE: Wire routing must not to interfere with circulator blower operation, filter removal, or routine maintenance.

Junction Box Relocation

WARNING

Edges of sheet metal holes may be sharp. Use gloves as a precaution when removing hole plugs.

WARNING

To prevent personal injury or death due to electrical shock, disconnect electrical power before installing or servicing this unit.

WARNING

HIGH VOLTAGE

To avoid the risk of injury, electrical shock or death, the furnace must be electrically grounded in accordance with local codes or in their absence, with the latest edition of the National Electric Code.

Line voltage connections can be made through either the right or left side panel. The furnace is shipped configured for a left side electrical connection. To make electrical connections through the opposite side of the furnace, the junction box must be relocated to the left side prior to making electrical connections. To relocate the junction box, perform the following steps.

1. Remove the burner compartment door.
2. Remove and save the two screws securing the junction box to the side panel.
3. Relocate junction box and associated plugs and grommets to opposite side panel. Secure with screws removed in step 2.

To ensure proper unit grounding, the ground wire should run from the furnace ground screw located inside the furnace junction box all the way back to the electrical panel.

NOTE: Do not use gas piping as an electrical ground. To confirm proper unit grounding, turn off the electrical power and perform the following check.

1. Measure resistance between the neutral (white) connection and one of the burners.
2. Resistance should measure 10 ohms or less.

This furnace is equipped with a blower door interlock switch which interrupts unit voltage when the blower door is opened for servicing. Do not defeat this switch.

24 Volt Thermostat Wiring

IMPORTANT NOTE: Wiring Routing must not interfere with circulator blower operation, filter removal or routine maintenance.

Low voltage connections can be made through either the right or left side panel. Thermostat wiring entrance holes are located in the blower compartment. The following figure shows connections for a "heat/cool system".

This furnace is equipped with a 40 VA transformer to facilitate use with most cooling equipment. Consult the wiring diagram, located on the blower compartment door, for further details of 115 Volt and 24 Volt wiring.

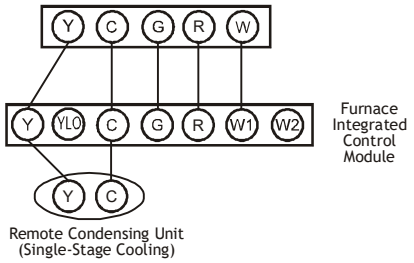

Thermostat - Single -Stage Heating with Single-Stage Cooling
NOTE: To apply a single-stage Heating Thermostat, the thermostat selector switch on the Integrated Control Module *must* be set on single-stage.
Figure 34

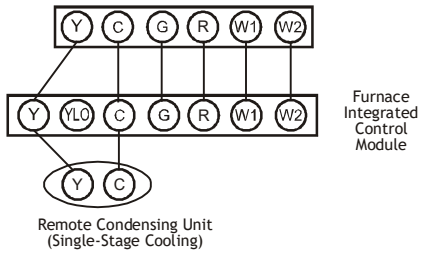

Thermostat - Two-Stage Heating with Single-Stage Cooling
Figure 35

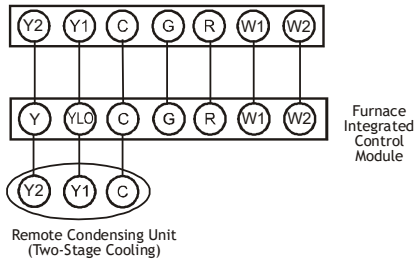

Thermostat - Two-Stage Heating with Two-Stage Cooling
Figure 36
Thermostat Wiring Diagrams

Single-Stage Heating Thermostat Application

A single-stage thermostat with only one heating stage may be used to control this furnace. The application of a single-stage thermostat offers a *timed* transition from low to high fire. The furnace will run on low stage for a fixed period of time before stepping up to high stage to satisfy the thermostat's call for heat. The delay period prior to stepping up can be set at either a fixed 10 or 20 minute time delay or a load based variable time between 1 and 12 minutes (AUTO mode). If the AUTO mode is selected, the control averages the cycle times of the previous three cycles and uses the average to determine the time to transition from low stage to high stage.

PCBBF139 CONTROL BOARD

PURPOSE	SWITCH GROUP	FUNCTION	DIP SWITCH			
			1	2	3	4
Thermostat Setup	S3	2 STAGE STAT	OFF	OFF		
		1 STG STAT 10 min delay	ON	OFF		
		1 STG STAT 20 min delay	ON	ON		
		AUTO	OFF*	ON*		
Heating Fan Off Delay	S3	90			OFF	OFF
		120			OFF	ON
		150			ON*	OFF*
		180			ON	ON

** Factory Setting*

Fossil Fuel Applications

This furnace can be used in conjunction with a heat pump in a fossil fuel application. A fossil fuel application refers to a combined gas furnace and heat pump installation which uses an outdoor temperature sensor to determine the most cost efficient means of heating (heat pump or gas furnace). A heat pump thermostat with *three stages of heat* is required to properly use a two-stage furnace in conjunction with a heat pump. Refer to the fossil fuel kit installation instructions for additional thermostat requirements. Strictly follow the wiring guidelines in the fossil fuel kit installation instructions. All furnace connections must be made to the furnace two-stage integrated control module and the "FURNACE" terminal strip on the fossil fuel control board.

Twinning

Using the "TWIN" terminals and proper wiring enables two *MEC96 furnaces of the same model and size to be twinned. Twinning allows simultaneous operation of two furnaces and forces the indoor blower motors of each furnace to operate synchronously into a common duct system. Using the twinning function will require only field installed wiring with no external kits or parts.

- The staging DIP switches and speed tap DIP switches must be set the same on both furnaces.
- **NOTE:** Each furnace must be connected to it's own 115 VAC power supply. The L1 connection to each furnace must be in phase (connected to circuit breakers on the same 115 VAC service panel phase leg). To verify that the furnaces are in phase, check from L1 to L1 on each furnace with a voltmeter. If the furnaces are in phase, the voltage between both furnaces will be ZERO.

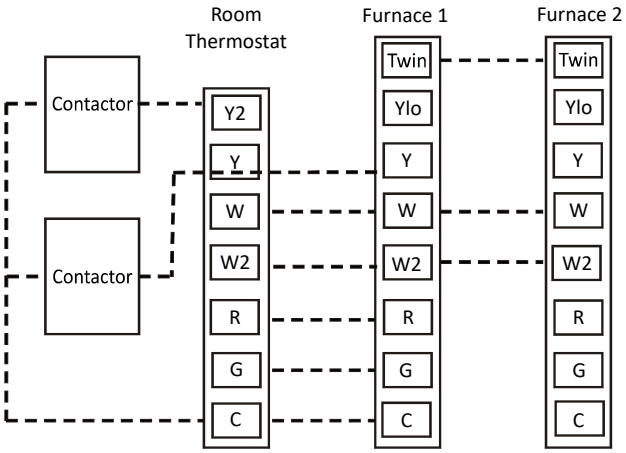

Figure 37

115 Volt Line Connection of Accessories (Humidifier and Electronic Air Cleaner)

The furnace integrated control module is equipped with line voltage accessory terminals for controlling power to an optional field-supplied humidifier and/or electronic air cleaner.

The accessory load specifications are noted in the chart below:

Humidifier	1.0 Amp maximum at 120 VAC
Electronic Air Cleaner	1.0 Amp maximum at 120 VAC

Turn OFF power to the furnace before installing any accessories. Follow the humidifier or air cleaner manufacturers' instructions for locating, mounting, grounding, and controlling these accessories. Accessory wiring connections are to be made through the ¼" quick connect terminals provided on the furnace integrated control module. The humidifier and electronic air cleaner hot terminals are identified as HUM and EAC. The humidifier and electronic air cleaner neutral terminals are identified as NEUTRAL. All field wiring must conform to applicable codes. Connections should be made as shown. If it is necessary for the installer to supply additional line voltage wiring to the inside of the furnace, the wiring must conform to all local codes, and have a minimum temperature rating of 105°C. All line voltage wire splices must be made inside the furnace junction box.

The integrated control module humidifier terminal (HUM) is energized with 115 volts whenever the induced draft blower is energized. The integrated control module electronic air cleaner terminal (EAC) is energized with 115 volts whenever the circulator blower is energized. This terminal can also be used to provide 115 volt power to a humidifier transformer. The remaining primary transformer wire would be connected to the Line N on the control board.

WARNING

HIGH VOLTAGE

To avoid personal injury or death due to electrical shock, disconnect electrical power before servicing or changing any electrical wiring.

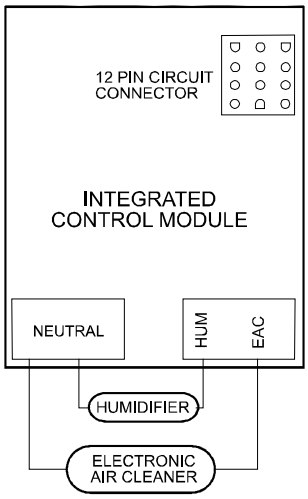

Accessories - Accessories Wiring
Figure 38

GAS SUPPLY AND PIPING

WARNING

To avoid possible unsatisfactory operation of equipment damage due to underfiring equipment, use the proper size of natural/propane gas piping needed when running pipe from the meter/tank to the furnace.

INLET GAS SUPPLY PRESSURE		
Natural Gas	Minimum: 4.5" w.c.	Maximum: 10.0" w.c.
Propane Gas	Minimum: 11.0" w.c.	Maximum: 13.0" w.c.

The furnace rating plate includes the approved furnace gas input rating and gas types. The furnace must be equipped to operate on the type of gas applied. This includes any conversion kits required for alternate fuels and/or high altitude.

Inlet gas supply pressures must be maintained within the ranges specified in the adjacent table. The supply pressure must be constant and available with all other household gas fired appliances operating. The minimum gas supply pressure must be maintained to prevent unreliable ignition. The maximum must not be exceeded to prevent unit overfiring.

High Altitude Derate

When this furnace is installed at high altitude, the appropriate High Altitude orifice kit must be applied. This is required due to the natural reduction in the density of both the gas fuel and combustion air as altitude increases. The kit will provide the proper design certified input rate within the specified altitude range.

High altitude kits are purchased according to the installation altitude and usage of either natural or propane gas. Consult the furnace Specification Sheet for appropriate kits.

Do **not** derate the furnace by adjusting the manifold pressure to a lower pressure than specified on the furnace rating plate. The combination of the lower air density and a lower manifold pressure will prohibit the burner orifice from drawing the proper amount of air into the burner. This may cause incomplete combustion, flashback, and possible yellow tipping.

In some areas the gas supplier may artificially derate the gas in an effort to compensate for the effects of altitude. If the gas is artificially derated, the appropriate orifice size must be determined based upon the BTU/ft^3 content of the derated gas and the altitude. Refer to the National Fuel Gas Code, NFPA 54/ANSI Z223.1, and information provided by the gas supplier to determine the proper orifice size.

A different pressure switch may be required at high altitude regardless of the BTU/ft^3 content of the fuel used. Consult the furnace Specification Sheet for pressure switch.

WARNING

Possible property damage, personal injury or death may occur if the correct conversion kits are not installed. The appropriate kits must be applied to ensure safe and proper furnace operation. All conversions must be performed by a qualified installer or service agency.

Propane Gas Conversion

This unit is configured for natural gas, but may be converted for use with L.P. gas. Refer to the section on PROPANE GAS HIGH ALTITUDE INSTALLATIONS for L.P. kit selection.

Consult the furnace Specification Sheet for a listing of appropriate kits. The indicated kits must be used to insure safe and proper furnace operation. All conversions must be performed by a qualified installer, or service agency.

CAUTION

To prevent unreliable operation or equipment damage, the inlet gas supply pressure must be as specified on the unit rating plate with all other household has fired appliances operating.

NOTE: If converting to LP gas, it is recommended that an LPLP0* kit also be installed. The use of this kit will prevent the furnace from firing when the LP gas supply pressure is too low to support proper combustion.

Gas Valve

This unit is equipped with a 24 volt gas valve controlled during furnace operation by the integrated control module. As shipped, the valve is configured for natural gas. The valve is field convertible for use with propane gas by replacing the regulator spring with a propane gas spring from an appropriate manufacturer's propane gas conversion kit. Taps for measuring the gas supply pressure and manifold pressure are provided on the valve.
The gas valve has a manual ON/OFF control located on the valve itself. This control may be set only to the "ON" or "OFF" position. Refer to the lighting instructions label or *Startup Procedure & Adjustment* for use of this control during start up and shut down periods.

Gas Piping Connections

The gas piping supplying the furnace must be properly sized based on the gas flow required, specific gravity of the gas, and length of the run. The gas line installation must comply with local codes, or in their absence, with the latest edition of the National Fuel Gas Code, NFPA 54/ANSI Z223.1.

Natural Gas Capacity of Pipe
In Cubic Feet of Gas Per Hour (CFH)

Length of Pipe in Feet	Nominal Black Pipe Size				
	1/2"	3/4"	1"	1 1/4"	1 1/2"
10	132	278	520	1050	1600
20	92	190	350	730	1100
30	73	152	285	590	980
40	63	130	245	500	760
50	56	115	215	440	670
60	50	105	195	400	610
70	46	96	180	370	560
80	43	90	170	350	530
90	40	84	160	320	490
100	38	79	150	305	460

(Pressure 0.5 psig or less and pressure drop of 0.3" W.C.; Based on 0.60 Specific Gravity Gas)

$$\text{CFH} = \frac{\text{BTUH Furnace Input}}{\text{Heating Value of Gas (BTU/Cubic Foot)}}$$

To connect the furnace to the building's gas piping, the installer must supply a ground joint union, drip leg, manual shutoff valve, and line and fittings to connect to gas valve. In some cases, the installer may also need to supply a transition piece from ½" pipe to a larger pipe size.
The following stipulations apply when connecting gas piping. Refer to *Gas Piping Connections* figure for typical gas line connections to the furnace.

- Gas piping must be supported external to the furnace cabinet so that the weight of the gas line does not distort the burner rack, manifold or gas valve.

- Use black iron or steel pipe and fittings for building piping. Where possible, use new pipe that is properly chamfered, reamed, and free of burrs and chips. If old pipe is used, be sure it is clean and free of rust, scale, burrs, chips, and old pipe joint compound.
- Use pipe joint compound on male threads ONLY. Always use pipe joint compound (pipe dope) that is APPROVED FOR ALL GASES. DO NOT apply compound to the first two threads.
- Use ground joint unions.
- Install a drip leg to trap dirt and moisture before it can enter the gas valve. The drip leg must be a minimum of three inches long.
- Install a ⅛" NPT pipe plug fitting, accessible for test gage connection, immediately upstream of the gas supply connection to the furnace.
- Always use a back-up wrench when making the connection to the gas valve to keep it from turning. The orientation of the gas valve on the manifold must be maintained as shipped from the factory. Maximum torque for the gas valve connection is 375 in-lbs; excessive over-tightening may damage the gas valve.
- Install a manual shutoff valve between the gas meter and unit within six feet of the unit. If a union is installed, the union must be downstream of the manual shutoff valve, between the shutoff valve and the furnace.
- Tighten all joints securely.
- Connect the furnace to the building piping by one of the following methods:
  - Rigid metallic pipe and fittings.
  - Semi-rigid metallic tubing and metallic fittings. Aluminum alloy tubing must not be used in exterior locations. In order to seal the grommet cabinet penetration, rigid pipe must be used to reach the outside of the cabinet. A semi-rigid connector to the gas piping may be used from there.
- Use listed gas appliance connectors in accordance with their instructions. Connectors must be fully in the same room as the furnace.
- Protect connectors and semirigid tubing against physical and thermal damage when installed. Ensure aluminum-alloy tubing and connectors are coated to protect against external corrosion when in contact with masonry, plaster, or insulation, or subjected to repeated wetting by liquids such as water (except rain water), detergents, or sewage.

The gas piping may enter the left or right side of the furnace cabinet. The installer must supply rigid pipe long enough to reach the outside of the cabinet to seal the grommet cabinet penetration. A semi-rigid connector to the gas piping can be used outside the cabinet per local codes. ½" NPT pipe and fittings are required. For models with an "L" shaped manifold, a 4 ½" long nipple is required. For models with a hook shaped manifold, a 2" long nipple is required.

A semi-rigid connector to the gas piping can be used outside the cabinet per local codes. From the elbow, the length of pipe and the fittings required will vary by the side chosen, location of union and cabinet width. The union may be placed inside or outside of the cabinet.

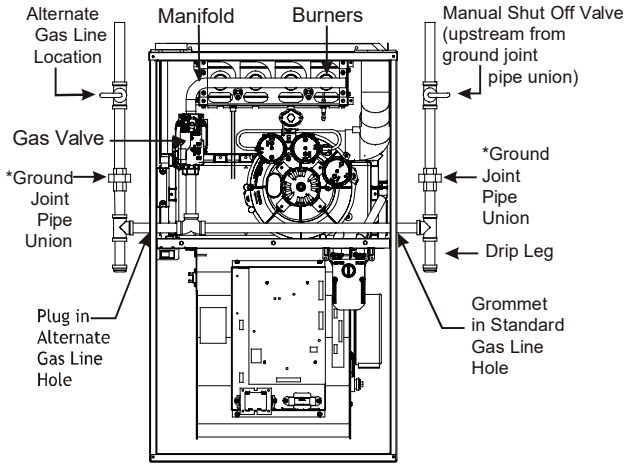

**NOTE: Union may be inside furnace cabinet where allowed by local codes.*

UPFLOW
Figure 39

Gas Connections

WARNING

To avoid the possibility of explosion or fire, never use a match or open flame to test for leaks.

Gas Piping Checks

Before placing unit in operation, leak test the unit and gas connections.

Check for leaks using an approved chloride-free soap and water solution, an electronic combustible gas detector, or other approved testing methods.

NOTE: Never exceed specified pressures for testing. Higher pressure may damage the gas valve and cause subsequent overfiring, resulting in heat exchanger failure.

Disconnect this unit and shutoff valve from the gas supply piping system before pressure testing the supply piping system with pressures in excess of ½ psig (3.48 kPa). Isolate this unit from the gas supply piping system by closing its external manual gas shutoff valve before pressure testing supply piping system with test pressures equal to or less than ½ psig (3.48 kPA).

Propane Gas Tanks and Piping

WARNING

If the gas furnace is installed in a basement, an excavated area or confined space, it is strongly recommended to contact a propane supplier to install a gas detecting warning device in case of a gas leak.

- **Since propane gas is heavier than air, any leaking gas can settle in any low areas or confined spaces.**
- **Propane gas odorant may fade, making the gas undetectable except with a warning device.**

A gas detecting warning system is the only reliable way to detect a propane gas leak. Rust can reduce the level of odorant in propane gas. Do not rely on your sense of smell. Contact a local propane gas supplier about installing a gas detecting warning system. If the presence of gas is suspected, follow the instructions listed in the *Safety Considerations* section of this manual.

All propane gas equipment must conform to the safety standards of the National Board of Fire Underwriters, NBFU Manual 58.

For satisfactory operation, propane gas pressure must be 10” WC at the furnace manifold with all gas appliances in operation. Maintaining proper gas pressure depends on three main factors:

1. Vaporization rate, depending on temperature of the liquid, and “wetted surface” area of the container or containers.
2. Proper pressure regulation (Two-stage regulation is recommended for both cost and efficiency).
3. Pressure drop in lines between regulators, and between second stage regulator and the appliance. Pipe size will depend on length of pipe run and total load of all appliances.

Complete information regarding tank sizing for vaporization, recommended regulator settings, and pipe sizing is available from most regulator manufacturers and propane gas suppliers.

Since propane gas will quickly dissolve white lead and most standard commercial compounds, special pipe dope must be used. Always use a pipe thread sealant approved for all gases.

Refer to the this illustration for typical propane gas installations and piping.

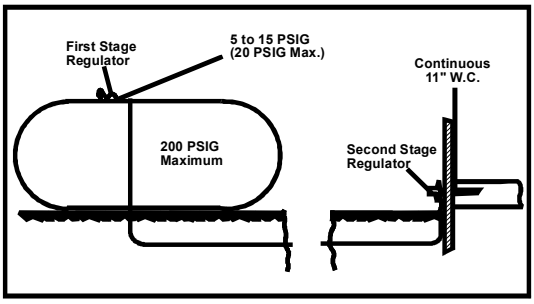

Propane Gas Installation (Typ.)
Figure 40

CIRCULATING AIR & FILTERS

Duct work - Air Flow

Duct systems and register sizes must be properly designed for the CFM and external static pressure rating of the furnace. Design the ductwork in accordance with the recommended methods of “Air Conditioning Contractors of America” Manual D.

Install the duct system in accordance with Standards of the National Board of Fire Underwriters for the Installation of Air Conditioning, Warm Air Heating and Ventilating Systems. Pamphlets No. 90A and 90B.

A closed return duct system must be used, with the return duct connected to the furnace. **NOTE:** Ductwork must never be attached to the back of the furnace. For upflow installations requiring 1800 CFM or more, use either two side returns or bottom return or a combination of side / bottom. Flexible joints may be used for supply and return connections to reduce noise transmission. To prevent the blower from interfering with combustion air or draft when a central return is used, a connecting duct must be installed between the unit and the utility room wall. Never use a room, closet, or alcove as a return air chamber.

Checking Duct Static

Refer to your furnace rating plate for the maximum ESP (external duct static) rating.

WARNING

Never allow the products of combustion, including carbon monoxide, to enter the return duct work or circulation air supply.

Total external static refers to everything external to the furnace cabinet. Cooling coils, filters, ducts, grilles, registers must all be considered when reading your total external static pressure. The supply duct pressure must be read between the furnace and the cooling coil.

This reading is usually taken by removing the “A” shaped block off plate from the end on the coil; drilling a test hole in it and reinstalling the block off plate. Take a duct static reading at the test hole. Tape up the test hole after your test is complete. The negative pressure must be read between the filter and the furnace blower.

Too much external static pressure will result in insufficient air that can cause excessive temperature rise. This can cause limit switch tripping and heat exchanger failure.

To determine total external duct static pressure, proceed as follows:

1. With clean filters in the furnace, use a manometer to measure the static pressure of the return duct at the inlet of the furnace. (Negative Pressure)

2. Measure the static pressure of the supply duct. (Positive Pressure)
3. The difference between the two numbers is .4” w.c.

EXAMPLE:
static reading from return duct = -.1” w.c.
static reading from supply duct = .3” w.c.
total external static pressure on this system = .4” w.c.

NOTE: BOTH READINGS MAY BE TAKEN SIMULTANEOUSLY AND READ DIRECTLY ON THE MANOMETER IF SO DESIRED. IF AN AIR CONDITIONER COIL OR ELECTRONIC AIR CLEANER IS USED IN CONJUNCTION WITH THE FURNACE, THE READINGS MUST ALSO INCLUDE THESES COMPONENTS, AS SHOWN IN THE FOLLOWING DRAWING.

4. Consult proper tables for the quantity of air.

If the total external static pressure exceeds the maximum listed on the furnace rating plate, check for closed dampers, registers, undersized and/or oversized poorly laid out duct work.

The temperature rise of the furnace must be within the temperature rise range listed on the furnace rating plate.

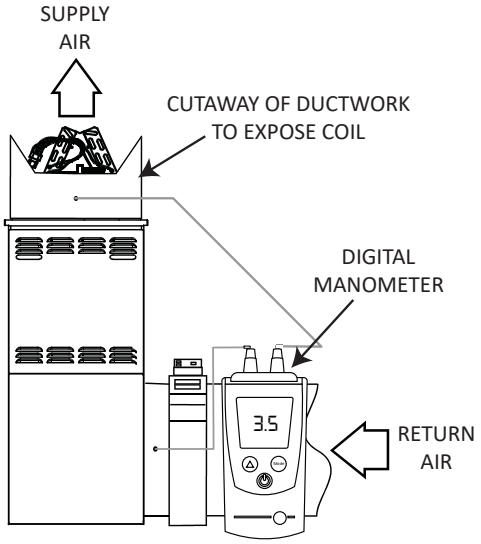

CHECKING STATIC PRESSURE
FIGURE 41

Air Cleaner Installation Location	Maximum Heating Airflow	Filter (Media) Dimensions	Part Number	Air Cleaner Family
Side or bottom return	1200 CFM	16 in X 20 in x 5¼"	AM11-1620-5	AM11-5
Side or bottom return	1600 CFM	16 in X 25 in x 5¼"	AM11-1625-5	
Side or bottom return	1600 CFM	20 in X 20 in x 5¼"	AM11-2020-5	
Side or bottom return	2000 CFM	20 in X 25 in x 5¼"	AM11-2025-5	
Side return (for 2 separate returns)	2 X 1600 CFM	2, 16 in X 25 in x 5¼"	AM11-3225-5	AM11-3225
Side return (Right angle)	2000 CFM	20 in X 25 in x 5¼"	AM11-2025-5RA	AM11-5RA
Bottom return (platform)	2000 CFM	20 in X 25 in x 5¼"	AM11-2832-5PP	AM11-5PP
Bottom return (platform)	2000 CFM	20 in X 25 in x 5¼"	AM11-2843-5PP	

AM11-5 Family	AM11-5RA Family	AM11-5PP Family
		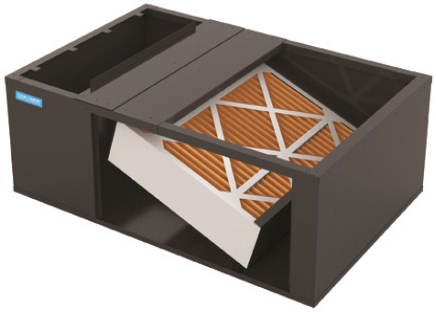

WARNING

Edges of sheet metal hole may be sharp. Use gloves as a precaution when removing sheet metal from return air openings.

Bottom Return Air Opening [Upflow Models]

The bottom return air opening on upflow models utilizes a “lance and cut” method to remove sheet metal from the duct opening in the base pan. To remove, simply press out the lanced sections by hand to expose the metal strips retaining the sheet metal over the duct opening. Using tin snips, cut the metal strips and remove the sheet metal covering the duct opening. In the corners of the opening, cut the sheet metal along the scribe lines to free the duct flanges. Using the scribe line along the duct flange as a guide, unfold the duct flanges around the perimeter of the opening using a pair of seamer pliers or seamer tongs.

NOTE: Airflow area will be reduced by approximately 18% if duct flanges are not unfolded. This could cause performance issues and noise issues.

When the furnace is used in connection with a cooling unit, the furnace should be installed in parallel with or on the upstream side of the cooling unit to avoid condensation in the heating element. With a parallel flow arrangement, the dampers or other means used to control the flow of air must be adequate to prevent chilled air from entering the furnace and, if manually operated, must be equipped with means to prevent operation of either unit unless the damper is in the full heat or cool position.

When the furnace is installed without a cooling coil, it is recommended that a removable access panel be provided in the outlet air duct. This opening shall be accessible when the furnace is installed and shall be of such a size that the heat exchanger can be viewed for visual light inspection or such that a sampling probe can be inserted into the airstream. The access panel must be made to prevent air leaks when the furnace is in operation.

When the furnace is heating, the temperature of the return air entering the furnace must be between 55°F and 100°F.

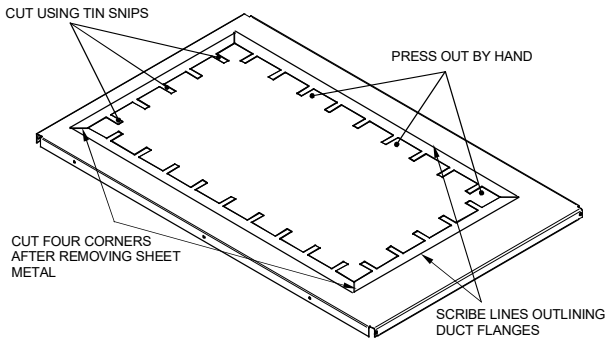

Duct Flange Cut Outs
Figure 42

Filters - Read This Section Before Installing The Return Air Duct work

Filters must be used with this furnace. Discuss filter maintenance with the building owner. Filters do not ship with this furnace, but must be provided, sized and installed externally by the installer. Filters must comply with UL900 or CAN/ULCS111 standards. Damage or repairs due to the installation of the furnace without filters is not covered under the warranty.

On upflow units, guide dimples locate the side return cutout locations. Use a straight edge to scribe lines connecting the dimples. Cut out the opening on these lines.

NOTE: An undersized opening will cause reduced airflow.

Refer to the following table to determine filter area requirements.

Model	Minimum Recommended Filter Size^
MEC960303AN	1 - 16 X 25 Side or 1- 14 X 25 Bottom
MEC960403AN	1 - 16 X 25 Side or 1- 14 X 25 Bottom
MEC960603AN	1 - 16 X 25 Side or 1- 14 X 25 Bottom
MEC960302BN	1 - 16 X 25 Side or Bottom
MEC960402BN	1 - 16 X 25 Side or Bottom
MEC960603BN	1 - 16 X 25 Side or Bottom
MEC960803BN	1 - 16 X 25 Side or Bottom
MEC960804CN	1 - 16 X 25 Side or Bottom
MEC961004CN	1 - 16 X 25 Side or Bottom
MEC961005CN	1 - 20 X 25 Bottom / 2 - 16 X 25 Side Return
MEC961205DN	1 - 20 X 25 Bottom / 2 - 16 X 25 Side Return
CEC960403BN	2 - 10 X 20 or 1 - 16 X 25 Top Return
CEC960603BN	2 - 10 X 20 or 1 - 16 X 25 Top Return
CEC960803BN	2 - 10 X 20 or 1 - 16 X 25 Top Return
CEC961005CN	2 - 14 X 20 or 1 - 20 X 25 Top Return

^ Larger filters may be used, filters may also be centrally located

Change filters before occupants take ownership of a new home!

Upright Installations

Depending on the installation and/or customer preference, differing filter arrangements can be applied. Filters can be installed in the central return register or a side panel external filter rack kit (upflows). As an alternative a media air filter or electronic air cleaner can be used as the requested filter. Consider installing an air cleaner with deep-pleated media filter at the time of furnace installation. A deep-pleated filter with a MERV rating of 8 (minimum) will often provide better filtration to protect equipment and the air distribution system than a standard 1” filter and often has lower static pressure loss than a 1” filter. Also a deep-pleated filter will typically require less frequent replacement intervals. Avoid using highly restrictive 1” filters which produce static pressure loss greater than .25”

W.C. In some installations the minimum filter size required will not lend itself to a filter installation on the side of the furnace. The installation of a centrally installed air cleaner cabinet or a return duct filter installation may offer more practicality.

Clean Comfort™ brand MERV 11 air cleaners have 5¼" media filters and are available in the following configurations. Consult your distributor for information on our complete line of IAQ Clean Comfort™ products. The figure below shows possible filter locations.

Horizontal Installations

Filters must be installed in either the central return register or in the return air duct work.

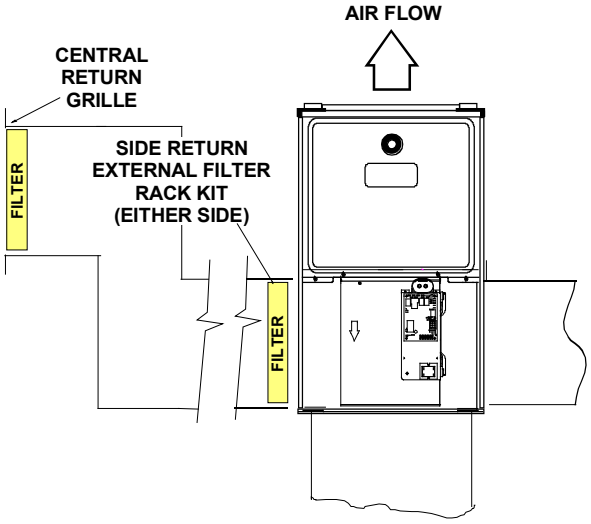

Figure 43

STARTUP PROCEDURE & ADJUSTMENT

Furnace must have a 115 VAC power supply properly connected and grounded. Proper polarity must be maintained for correct operation. In addition to the following start-up and adjustment items, refer to further information in *Operational Checks* section.

Furnace Cabinet

Check that all furnace cabinet sealing components are in place (plugs, grommets, gaskets).

NOTE: If the furnace bottom panel has not been removed for a return duct connection, all perforations must be sealed with duct sealant compound or other suitable method to prevent air leakage. For optimal performance verify that all door gaskets are properly in place and replace as needed to prevent air leakage.

Drain Trap Priming

The drain trap MUST be primed prior to furnace startup. To prime, fill both sides of the drain trap with water. This ensures proper furnace drainage upon startup and prohibits the possibility of flue gases escaping through the drain system.

Furnace Operation

Purge gas lines of air prior to startup. Be sure not purge lines into an enclosed burner compartment.

Check for leaks using an approved chloride-free soap and water solution, an electronic combustible gas detector, or other approved method. Verify that all required kits (propane gas, high altitude, etc.) have been appropriately installed.

Furnace Startup

1. Close the manual gas shutoff valve external to the furnace.
2. Turn off the electrical power to the furnace.
3. Set the room thermostat to the lowest possible setting.
4. Remove the burner compartment door.

NOTE: This furnace is equipped with an ignition device which automatically lights the burner. Do not try to light the burner by hand.

5. Move the furnace gas valve manual control to the OFF position.
6. Wait five minutes then smell for gas. Be sure check near the floor as some types of gas are heavier than air.
7. If you smell gas after five minutes, immediately follow the *Safety Considerations* on page 2 of this manual. If you do not smell gas after five minutes, move the furnace gas valve manual control to the ON position.
8. Replace the burner compartment door.
9. Open the manual gas shutoff valve external to the furnace.
10. Turn on the electrical power to the furnace.
11. Adjust the thermostat to a setting above room temperature.
12. After the burners are lit, set the thermostat to desired temperature.

Furnace Shutdown

1. Set the thermostat to the lowest setting. The integrated control will close the gas valve and extinguish flame. Following a 15 second delay, the induced draft blower will be de-energized. The circulator blower will shut off after the time delay expires (selectable 90, 120, 150, 180 seconds).
2. Remove the burner compartment door and move the furnace gas valve manual control to the OFF position.
3. Close the manual gas shutoff valve external to the furnace.
4. Replace the burner compartment door.

Gas Supply Pressure Measurement

Gas Pressure Test

The line pressure supplied to the gas valve must be within the range specified below. The supply pressure can be measured at the gas valve inlet pressure tap or at a hose

fitting installed in the gas piping drip leg. The supply pressure must be measured with the burners operating. To measure the gas supply pressure, use the following procedure.

1. Turn OFF gas to furnace at the manual gas shutoff valve external to the furnace.
2. Connect a calibrated manometer (or appropriate gas pressure gauge) at either the gas valve inlet pressure tap or the gas piping drip leg. See White-Rodgers 36J54 gas valve figure for location of inlet pressure tap.

NOTE: If measuring gas pressure at the drip leg, a field-supplied hose barb fitting must be installed prior to making the hose connection. If using the inlet pressure tap on the White-Rodgers 36J54 gas valve, then use the 36G/J Valve Pressure Check Kit, Part No. 0151K00000S.

3. Turn ON the gas supply and operate the furnace and all other gas consuming appliances on the same gas supply line.
4. Measure furnace gas supply pressure with burners firing. Supply pressure must be within the range specified in the *Inlet Gas Supply Pressure* table.

If supply pressure differs from table, make the necessary adjustments to pressure regulator, gas piping size, etc., and/or consult with local gas utility.

5. Turn OFF gas to furnace at the manual shutoff valve and disconnect manometer. Reinstall plug before turning on gas to furnace.
6. Turn OFF any unnecessary gas appliances stated in step 3.

Gas Manifold Pressure Measurement and Adjustment

CAUTION

To prevent unreliable operation or equipment damage, the gas manifold pressure must be as specified on the unit rating plate. Only minor adjustments should be made by adjusting the gas valve pressure regulator.

Only small variations in gas pressure should be made by adjusting the gas valve pressure regulator. The manifold pressure must be measured with the burners operating. To measure and adjust the manifold pressure, use the following procedure.

1. Turn OFF gas to furnace at the manual gas shutoff valve external to the furnace.
2. Turn off all electrical power to the system.
3. Outlet pressure tap connections: White-Rodgers 36J54 valve: Back outlet pressure test screw (inlet/outlet pressure tap) out one turn (counterclockwise, not more than one turn).
4. Attach a hose and manometer to the outlet pressure tap (White-Rodgers valve).
5. Turn ON the gas supply.
6. Turn on power and close thermostat “R” and “W1” contacts to provide a call for low stage heat.
7. Measure the gas manifold pressure with burners firing. Adjust manifold pressure using the *Manifold Gas Pressure* table shown below.

Manifold Gas Pressure			
Gas		Range	Nominal
Natural	Low Stage	1.6 - 2.2" w.c.	1.9" w.c.
	High Stage	3.2 - 3.8" w.c.	3.5" w.c.
Propane	Low Stage	5.7 - 6.3" w.c.	6.0" w.c.
	High Stage	9.7 - 10.3" w.c.	10.0" w.c.

8. Remove regulator cover screw from the low (LO) outlet pressure regulator adjust tower and turn screw clockwise to increase pressure or counterclockwise to decrease pressure. Replace regulator cover screw.
9. Close thermostat “R”, “W1” and “W2” contacts to provide a call for high stage heat.
10. Remove regulator cover screw from the high (HI) outlet pressure regulator adjust tower and turn screw clockwise to increase pressure or counterclockwise to decrease pressure. Replace regulator cover screw.
11. Turn off all electrical power and gas supply to the system.
12. Remove the manometer hose from the hose barb fitting or outlet pressure tap.
13. Replace outlet pressure tap: White-Rodgers 36J54 valve: Turn outlet pressure test screw in to seal pressure port (clockwise, 7 in-lb minimum).
14. Turn on electrical power and gas supply to the system.
15. Close thermostat contacts “R” and “W1/W2” to energize the valve.

Using a leak detection solution or soap suds, check for leaks at outlet pressure tap plug (Honeywell valve) or screw (White-Rodgers valve). Bubbles forming indicate a leak. SHUT OFF GAS AND REPAIR ALL LEAKS IMMEDIATELY!

16. **NOTE:** For gas to gas conversion, consult your dealer for appropriate conversion.

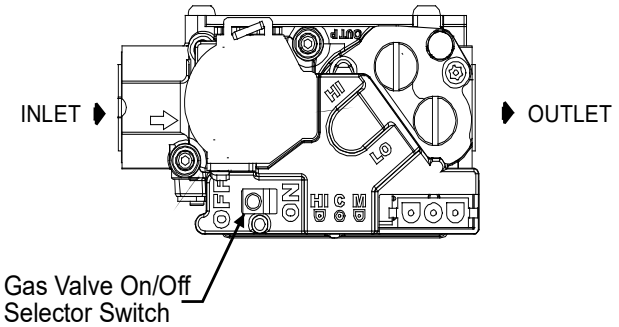

White-Rodgers Model 36J54 (Two-Stage)

Gas Input Rate Measurement (Natural Gas Only)

INLET GAS SUPPLY PRESSURE		
Natural Gas	Minimum: 4.5" w.c.	Maximum: 10.0" w.c.
Propane Gas	Minimum: 11.0" w.c	Maximum: 13.0" w.c.

The actual gas input rate to the furnace must never be greater than that specified on the unit rating plate. To measure natural gas input using the gas meter, use the following procedure.

1. Turn OFF the gas supply to all other gas-burning appliances except the furnace.
2. While the furnace is operating at high fire rate, time and record one complete revolution of the gas meter dial measuring the smallest quantity, usually the dial that indicates ½ cu. ft. per revolution. You will use this number to calculate the quantity of gas in cubic ft. if the furnace would consume if it ran steadily for one hour (3600 seconds).
3. If the ½ cu. ft. dial was used, multiply your number x 2. **EXAMPLE**: If it took 23 seconds to complete one revolution of the ½ ft. dial (23 x 2 = 46).

This tells us that at this rate, it would take 46 seconds to consume one cu. ft. of gas. 3600 / 46 = 78.

This tells us that in one hour, the furnace would consume 78 cu. ft. of gas.

The typical value range for 1 cu. ft. of natural gas is around 1000 BTU. Check with your gas utility, if possible. In this example, the furnace is consuming 78,000 BTUH.

NOTE: The final manifold pressure cannot vary by more than ± 0.3" w.c. for Natural and ± 0.5" for LP from the specified setting. Consult your local gas supplier if additional input rate adjustment is required.

4. Turn ON gas to and relight all other appliances turned off in step 1. Be certain that all appliances are functioning properly and that all pilot burners are operating.

Temperature Rise

Temperature rise must be within the range specified on the unit rating plate. An incorrect temperature rise may result in condensing in or overheating of the heat exchanger. An airflow and temperature rise table is provided in the Specification Sheet applicable to your model. Determine and adjust temperature rise as follows:

1. Operate furnace with burners firing for approximately ten minutes. Ensure all registers are open and all duct dampers are in their final (fully or partially open) position.
2. Place thermometers in the return and supply ducts as close to the furnace as possible. Thermometers must not be influenced by radiant heat by being able to "see" the heat exchanger.
3. Subtract the return air temperature from the supply air temperature to determine the air temperature rise. Allow adequate time for thermometer readings to stabilize.
4. Adjust temperature rise by adjusting the circulator blower speed. Increase blower speed to reduce temperature rise. Decrease blower speed to increase temperature rise. Refer to *Startup Procedure and Adjustment - Circulator Blower Speeds* for speed changing details.

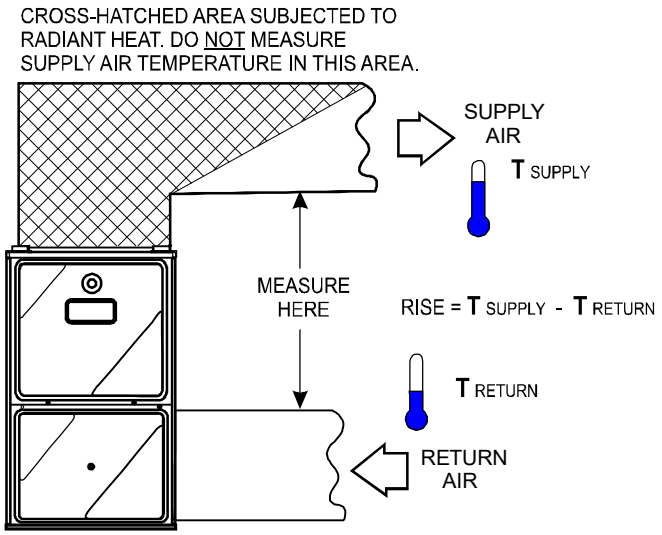

Temperature Rise Measurement
Figure 45

Circulator Blower Speeds

This furnace is equipped with a multi-speed ECM motor. The line voltage (115 VAC) power supply to the motor is constant and not switched by the control board. Motor operation is also dependent on a pulsing D.C. signal on one of the four speed taps on the motor. The airflow tables for heating and cooling speeds show the relationship between airflow (CFM) and external static pressure for each size furnace.

WARNING

To avoid personal injury or death due to electrical shock, turn OFF power to the furnace before changing speed taps.

Circulator Blower Speed Facts

1. Motor speed Tap wiring must remain in factory position on the control board and motor.
2. There are 4 speed Tap wires to the motor T1, T2, T3, T4.
3. There are 5 speeds available, depending on DIP switch settings and found in air flow table for each size furnace.
4. Heating input (W1/ W2) always has priority over all other thermostat input.
5. Cooling input (YLo/ Y) has priority over continuous fan input.

6. Continuous fan input (G) has lowest priority.
   a. Refer to the air flow table for your specific model furnace
   b. If a cooling or heat pump condensing unit is being used in conjunction with this furnace, DIP switches
7. S1-1, S1-2, S1-3 are used to select the proper cooling speeds to match the outdoor unit size. Typical CFM requirements are 400 CFM / Ton.
   c. Heating speeds are selected DIP switches S1-4 & S2-1.

1. Turn OFF power to the furnace.
2. Select the cooling blower speeds that match the installation requirements from the airflow table in this manual or the Service Manual, If factory cooling speeds do not match the installation requirements, the dip switch settings must be changed from factory position.
3. Turn ON power to furnace.
4. Verify proper temperature rise in heat mode and CFM in cooling mode.

Blower Heat Off Delay Timings

The integrated control module provides a selectable heat off delay function. The heat off delay period may be set to 90, 120, 150, 180 seconds using the DIP switches provided on the control module. The delay is factory shipped at 150 seconds but may be changed to suit the installation requirements and/or homeowner preference. Refer to the following figures for switch positions and corresponding delay times.

PCBBF139 CONTROL BOARD

PURPOSE	SWITCH GROUP	FUNCTION	DIP SWITCH			
			1	2	3	4
Heating Fan Off Delay	S3	90			OFF	OFF
		120			OFF	ON
		150			ON	OFF
		180			ON	ON

**Factory Setting*

DIP Switch Settings

PCBBF139 CONTROL BOARD DIP SWITCHES

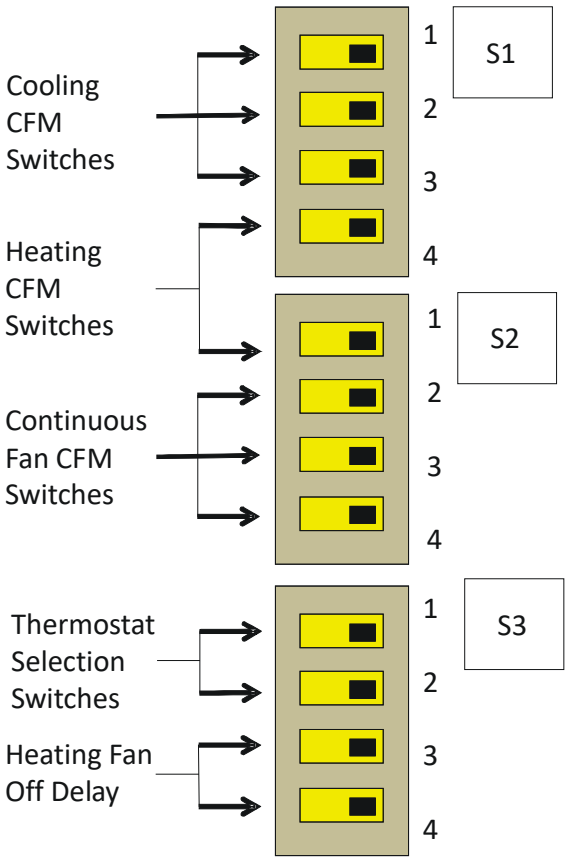

Purpose	Switch Group	Function	Dip Switch			
			1	2	3	4
Thermostat Setup	S3	2 Stage Stat	OFF	OFF		
		1 Stg Stat 10 min delay	ON	OFF		
		1 Stg Stat 20 min delay	ON	ON		
		Auto	OFF*	ON*		
Heating Fan Off Delay	S3	90			OFF	OFF
		120			OFF	ON
		150			ON*	OFF*
		180			ON	ON

* FACTORY SETTING

DIP SWITCH SETTINGS

PCBBF139	*CEC960403BN - COOLING								
DIP Switches	STATIC	0.1	0.2	0.3	0.4	0.5	0.6	0.7	0.8
S1-1 S1-2 S1-3	T STAT CALL	CFM	CFM	CFM	CFM	CFM	CFM	CFM	CFM
OFF OFF OFF*	Ylo	647	576	511	449	387	335	280	252
	Y	1229	1181	1150	1117	1078	1035	1002	964
ON OFF OFF	Ylo	1137	1096	1056	1018	981	940	897	859
	Y	647	576	511	449	387	335	280	252
ON ON OFF	Ylo	1137	1096	1056	1018	981	940	897	859
	Y	1229	1181	1150	1117	1078	1035	1002	964
OFF ON OFF^	Ylo	647	576	511	449	387	335	280	252
	Y	743	688	628	572	515	459	408	364
OFF OFF ON^	Ylo	647	576	511	449	387	335	280	252
	Y	939	894	846	806	759	706	661	614
OFF ON ON	Ylo	1137	1096	1056	1018	981	940	897	859
	Y	743	688	628	572	515	459	408	364
ON OFF ON	Ylo	939	894	846	806	759	706	661	614
	Y	1229	1181	1150	1117	1078	1035	1002	964
ON ON ON^	Ylo	939	894	846	806	759	706	661	614
	Y	1137	1096	1056	1018	981	940	897	859

PCBBF139	*CEC960403BN - CONTINOUS FAN								
DIP Switches	STATIC	0.1	0.2	0.3	0.4	0.5	0.6	0.7	0.8
S2-2 S2-3 S2-4	T STAT CALL	CFM	CFM	CFM	CFM	CFM	CFM	CFM	CFM
OFF OFF OFF	G	743	688	628	572	515	459	408	364
ON OFF OFF	G	939	894	846	806	759	706	661	614
ON ON OFF	G	1137	1096	1056	1018	981	940	897	859
OFF ON OFF	G	647	576	511	449	387	335	280	252
OFF OFF ON	G	1229	1181	1150	1117	1078	1035	1002	964
OFF ON ON	G	743	688	628	572	515	459	408	364
ON OFF ON	G	743	688	628	572	515	459	408	364
ON ON ON	G	743	688	628	572	515	459	408	364

PCBBF139	*CEC960403BN - HEATING													
DIP Switches	STATIC	0.1		0.2		0.3		0.4		0.5		0.6	0.7	0.8
S1-4 S2-1	T STAT CALL	CFM	RISE	CFM	RISE	CFM	RISE	CFM	RISE	CFM	RISE	CFM	CFM	CFM
OFF OFF*	W1	743	33	688	36	628	40	572	44	515	48	459	408	364
	W2	939	38	894	40	846	42	806	44	759	47	706	661	614
ON OFF**	W1	1137	N/A	1096	N/A	1056	N/A	1018	N/A	981	N/A	940	897	859
	W2	939	N/A	894	N/A	846	N/A	806	N/A	759	N/A	706	661	614
ON ON**	W1	1137	N/A	1096	N/A	1056	N/A	1018	N/A	981	N/A	940	897	859
	W2	647	N/A	576	N/A	511	N/A	449	N/A	387	N/A	335	280	252
OFF ON	W1	647	38	576	43	511	49	449	55	387	64	335	280	252
	W2	1229	29	1181	30	1150	31	1117	32	1078	33	1035	1002	964

*DEFAULT
**NOT RECOMMENDED
^SINGLE STAGE COOLING

DIP SWITCH SETTINGS

PCBBF139	*CEC960603BN - COOLING								
DIP Switches	STATIC	0.1	0.2	0.3	0.4	0.5	0.6	0.7	0.8
S1-1 S1-2 S1-3	T STAT CALL	CFM	CFM	CFM	CFM	CFM	CFM	CFM	CFM
OFF OFF OFF*	Ylo	1167	1122	1074	1029	984	935	885	840
	Y	1252	1206	1164	1118	1077	1034	991	945
ON OFF OFF	Ylo	752	609	534	460	396	345	N/A	N/A
	Y	1167	1122	1074	1029	984	935	885	840
ON ON OFF	Ylo	752	609	534	460	396	345	N/A	N/A
	Y	1252	1206	1164	1118	1077	1034	991	945
OFF ON OFF^	Ylo	1167	1122	1074	1029	984	935	885	840
	Y	899	845	788	729	671	607	558	504
OFF OFF ON	Ylo	1167	1122	1074	1029	984	935	885	840
	Y	1342	1304	1254	1219	1174	1127	1090	1045
OFF ON ON	Ylo	752	609	534	460	396	345	N/A	N/A
	Y	899	845	788	729	671	607	558	504
ON OFF ON^	Ylo	1342	1304	1254	1219	1174	1127	1090	1045
	Y	1252	1206	1164	1118	1077	1034	991	945
ON ON ON^	Ylo	1342	1304	1254	1219	1174	1127	1090	1045
	Y	752	609	534	460	396	345	N/A	N/A

PCBBF139	*CEC960603BN - CONTINOUS FAN								
DIP Switches	STATIC	0.1	0.2	0.3	0.4	0.5	0.6	0.7	0.8
S2-2 S2-3 S2-4	T STAT CALL	CFM	CFM	CFM	CFM	CFM	CFM	CFM	CFM
OFF OFF OFF	G	899	845	788	729	671	607	558	504
ON OFF OFF	G	1342	1304	1254	1219	1174	1127	1090	1045
ON ON OFF	G	752	609	534	460	396	345	N/A	N/A
OFF ON OFF	G	1167	1122	1074	1029	984	935	885	840
OFF OFF ON	G	1252	1206	1164	1118	1077	1034	991	945
OFF ON ON	G	899	845	788	729	671	607	558	504
ON OFF ON	G	899	845	788	729	671	607	558	504
ON ON ON	G	899	845	788	729	671	607	558	504

PCBBF139	*CEC960603BN - HEATING													
DIP Switches	STATIC	0.1		0.2		0.3		0.4		0.5		0.6	0.7	0.8
S1-4 S2-1	T STAT CALL	CFM	RISE	CFM	RISE	CFM	RISE	CFM	RISE	CFM	RISE	CFM	CFM	CFM
OFF OFF*	W1	899	42	845	44	788	47	729	51	671	56	607	558	504
	W2	1342	40	1304	41	1254	43	1219	44	1174	45	1127	1090	1045
ON OFF**	W1	752	N/A	609	N/A	534	N/A	460	N/A	396	N/A	345	N/A	N/A
	W2	1342	N/A	1304	N/A	1254	N/A	1219	N/A	1174	N/A	1127	1090	1045
ON ON**	W1	752	N/A	609	N/A	534	N/A	460	N/A	396	N/A	345	N/A	N/A
	W2	1167	N/A	1122	N/A	1074	N/A	1029	N/A	984	N/A	935	885	840
OFF ON	W1	1167	32	1122	33	1074	35	1029	36	984	38	935	885	840
	W2	1252	43	1206	44	1164	46	1118	48	1077	50	1034	991	945

*DEFAULT
**NOT RECOMMENDED
^SINGLE STAGE COOLING

DIP SWITCH SETTINGS

PCBBF139	*CEC960803BN - COOLING								
DIP Switches	STATIC	0.1	0.2	0.3	0.4	0.5	0.6	0.7	0.8
S1-1 S1-2 S1-3	T STAT CALL	CFM	CFM	CFM	CFM	CFM	CFM	CFM	CFM
OFF OFF OFF*	Ylo	920	868	813	760	713	653	602	561
	Y	1130	1085	1040	993	948	900	853	814
ON OFF OFF	Ylo	705	631	567	498	439	385	317	N/A
	Y	920	868	813	760	713	653	602	561
ON ON OFF	Ylo	705	631	567	498	439	385	317	N/A
	Y	1130	1085	1040	993	948	900	853	814
OFF ON OFF	Ylo	920	868	813	760	713	653	602	561
	Y	1221	1176	1136	1094	1050	1013	971	928
OFF OFF ON	Ylo	920	868	813	760	713	653	602	561
	Y	1323	1287	1253	1207	1168	1129	1087	1052
OFF ON ON	Ylo	705	631	567	498	439	385	317	N/A
	Y	1221	1176	1136	1094	1050	1013	971	928
ON OFF ON^	Ylo	1323	1287	1253	1207	1168	1129	1087	1052
	Y	1130	1085	1040	993	948	900	853	814
ON ON ON^	Ylo	1323	1287	1253	1207	1168	1129	1087	1052
	Y	705	631	567	498	439	385	317	N/A

PCBBF139	*CEC960803BN - CONTINOUS FAN								
DIP Switches	STATIC	0.1	0.2	0.3	0.4	0.5	0.6	0.7	0.8
S2-2 S2-3 S2-4	T STAT CALL	CFM	CFM	CFM	CFM	CFM	CFM	CFM	CFM
OFF OFF OFF	G	1221	1176	1136	1094	1050	1013	971	928
ON OFF OFF	G	1323	1287	1253	1207	1168	1129	1087	1052
ON ON OFF	G	705	631	567	498	439	385	317	N/A
OFF ON OFF	G	920	868	813	760	713	653	602	561
OFF OFF ON	G	1130	1085	1040	993	948	900	853	814
OFF ON ON	G	1221	1176	1136	1094	1050	1013	971	928
ON OFF ON	G	1221	1176	1136	1094	1050	1013	971	928
ON ON ON	G	1221	1176	1136	1094	1050	1013	971	928

PCBBF139	*CEC960803BN - HEATING													
DIP Switches	STATIC	0.1		0.2		0.3		0.4		0.5		0.6	0.7	0.8
S1-4 S2-1	T STAT CALL	CFM	RISE	CFM	RISE	CFM	RISE	CFM	RISE	CFM	RISE	CFM	CFM	CFM
OFF OFF*	W1	1221	41	1176	42	1136	44	1094	46	1050	47	1013	971	928
	W2	1323	54	1287	55	1253	57	1207	59	1168	61	1129	1087	1052
ON OFF**	W1	705	N/A	631	N/A	567	N/A	498	N/A	439	N/A	385	317	N/A
	W2	1323	N/A	1287	N/A	1253	N/A	1207	N/A	1168	N/A	1129	1087	1052
ON ON**	W1	705	N/A	631	N/A	567	N/A	498	N/A	439	N/A	385	317	N/A
	W2	920	N/A	868	N/A	813	N/A	760	N/A	713	N/A	653	602	561
OFF ON**	W1	920	N/A	868	N/A	813	N/A	760	N/A	713	N/A	653	602	561
	W2	1130	N/A	1085	N/A	1040	N/A	993	N/A	948	N/A	900	853	814

*DEFAULT
**NOT RECOMMENDED
^SINGLE STAGE COOLING

DIP SWITCH SETTINGS

PCBBF139	*CEC961005CN - COOLING								
DIP Switches	STATIC	0.1	0.2	0.3	0.4	0.5	0.6	0.7	0.8
S1-1 S1-2 S1-3	T STAT CALL	CFM	CFM	CFM	CFM	CFM	CFM	CFM	CFM
OFF OFF OFF*	Ylo	1637	1577	1528	1467	1410	1369	1307	1256
	Y	2069	2009	1978	1932	1923	1876	1834	1773
ON OFF OFF^	Ylo	1477	1422	1364	1301	1244	1190	1135	1078
	Y	1637	1577	1528	1467	1410	1369	1307	1256
ON ON OFF	Ylo	1477	1422	1364	1301	1244	1190	1135	1078
	Y	2069	2009	1978	1932	1923	1876	1834	1773
OFF ON OFF^	Ylo	1637	1577	1528	1467	1410	1369	1307	1256
	Y	1300	1234	1175	1109	1052	992	928	866
OFF OFF ON	Ylo	1637	1577	1528	1467	1410	1369	1307	1256
	Y	1866	1817	1774	1729	1684	1637	1593	1552
OFF ON ON^	Ylo	1477	1422	1364	1301	1244	1190	1135	1078
	Y	1300	1234	1175	1109	1052	992	928	866
ON OFF ON	Ylo	1866	1817	1774	1729	1684	1637	1593	1552
	Y	2069	2009	1978	1932	1923	1876	1834	1773
ON ON ON^	Ylo	1866	1817	1774	1729	1684	1637	1593	1552
	Y	1477	1422	1364	1301	1244	1190	1135	1078

PCBBF139	*CEC961005CN - CONTINOUS FAN								
DIP Switches	STATIC	0.1	0.2	0.3	0.4	0.5	0.6	0.7	0.8
S2-2 S2-3 S2-4	T STAT CALL	CFM	CFM	CFM	CFM	CFM	CFM	CFM	CFM
OFF OFF OFF	G	1300	1234	1175	1109	1052	992	928	866
ON OFF OFF	G	1866	1817	1774	1729	1684	1637	1593	1552
ON ON OFF	G	1477	1422	1364	1301	1244	1190	1135	1078
OFF ON OFF	G	1637	1577	1528	1467	1410	1369	1307	1256
OFF OFF ON	G	2069	2009	1978	1932	1923	1876	1834	1773
OFF ON ON	G	1300	1234	1175	1109	1052	992	928	866
ON OFF ON	G	1300	1234	1175	1109	1052	992	928	866
ON ON ON	G	1300	1234	1175	1109	1052	992	928	866

PCBBF139	*CEC961005CN - HEATING													
DIP Switches	STATIC	0.1		0.2		0.3		0.4		0.5		0.6	0.7	0.8
S1-4 S2-1	T STAT CALL	CFM	RISE	CFM	RISE	CFM	RISE	CFM	RISE	CFM	RISE	CFM	CFM	CFM
OFF OFF*	W1	1300	48	1234	50	1175	53	1109	56	1052	59	992	928	866
	W2	1866	48	1817	49	1774	50	1729	51	1684	53	1637	1593	1552
ON OFF	W1	1477	42	1422	44	1364	46	1301	48	1244	50	1190	1135	1078
	W2	1866	48	1817	49	1774	50	1729	51	1684	53	1637	1593	1552
ON ON	W1	1477	42	1422	44	1364	46	1301	48	1244	50	1190	1135	1078
	W2	1637	54	1577	56	1528	58	1467	61	1410	63	1369	1307	1256
OFF ON	W1	1637	38	1577	39	1528	41	1467	42	1410	44	1369	1307	1256
	W2	2069	43	2009	44	1978	45	1932	46	1923	46	1876	1834	1773

*DEFAULT
**NOT RECOMMENDED
^SINGLE STAGE COOLING

DIP SWITCH SETTINGS

PCBBF139	*MEC960303AN - COOLING								
DIP Switches	STATIC	0.1	0.2	0.3	0.4	0.5	0.6	0.7	0.8
S1-1 S1-2 S1-3	T STAT CALL	CFM	CFM	CFM	CFM	CFM	CFM	CFM	CFM
OFF OFF OFF*	Ylo	914	874	841	805	772	732	696	657
	Y	1070	1040	1005	975	942	915	883	849
ON OFF OFF	Ylo	653	597	552	507	460	410	366	326
	Y	914	874	841	805	772	732	696	657
ON ON OFF	Ylo	653	597	552	507	460	410	366	326
	Y	1070	1040	1005	975	942	915	883	849
OFF ON OFF^	Ylo	914	874	841	805	772	732	696	657
	Y	623	506	451	393	343	293	N/A	N/A
OFF OFF ON^	Ylo	914	874	841	805	772	732	696	657
	Y	755	710	672	627	582	534	491	447
OFF ON ON^	Ylo	653	597	552	507	460	410	366	326
	Y	623	506	451	393	343	293	N/A	N/A
ON OFF ON	Ylo	755	710	672	627	582	534	491	447
	Y	1070	1040	1005	975	942	915	883	849
ON ON ON^	Ylo	755	710	672	627	582	534	491	447
	Y	653	597	552	507	460	410	366	326

PCBBF139	*MEC960303AN - CONTINOUS FAN								
DIP Switches	STATIC	0.1	0.2	0.3	0.4	0.5	0.6	0.7	0.8
S2-2 S2-3 S2-4	T STAT CALL	CFM	CFM	CFM	CFM	CFM	CFM	CFM	CFM
OFF OFF OFF	G	623	506	451	393	343	293	N/A	N/A
ON OFF OFF	G	755	710	672	627	582	534	491	447
ON ON OFF	G	653	597	552	507	460	410	366	326
OFF ON OFF	G	914	874	841	805	772	732	696	657
OFF OFF ON	G	1070	1040	1005	975	942	915	883	849
OFF ON ON	G	623	506	451	393	343	293	N/A	N/A
ON OFF ON	G	623	506	451	393	343	293	N/A	N/A
ON ON ON	G	623	506	451	393	343	293	N/A	N/A

PCBBF139	*MEC960303AN - HEATING													
DIP Switches	STATIC	0.1		0.2		0.3		0.4		0.5		0.6	0.7	0.8
S1-4 S2-1	T STAT CALL	CFM	RISE	CFM	RISE	CFM	RISE	CFM	RISE	CFM	RISE	CFM	CFM	CFM
OFF OFF*	W1	623	30	506	37	451	41	393	47	343	N/A	293	N/A	N/A
	W2	755	35	710	38	672	40	627	43	582	46	534	491	447
ON OFF	W1	653	29	597	31	552	34	507	37	460	41	410	366	326
	W2	755	35	710	38	672	40	627	43	582	46	534	491	447
ON ON	W1	653	29	597	31	552	34	507	37	460	41	410	366	326
	W2	914	29	874	31	841	32	805	33	772	35	732	696	657
OFF ON	W1	914	20	874	21	841	22	805	23	772	24	732	696	657
	W2	1070	25	1040	26	1005	27	975	27	942	28	915	883	849

*DEFAULT
**NOT RECOMMENDED
^SINGLE STAGE COOLING

DIP SWITCH SETTINGS

PCBBF139	*MEC960403AN - COOLING								
DIP Switches	STATIC	0.1	0.2	0.3	0.4	0.5	0.6	0.7	0.8
S1-1 S1-2 S1-3	T STAT CALL	CFM	CFM	CFM	CFM	CFM	CFM	CFM	CFM
OFF OFF OFF*	Ylo	914	874	841	805	772	732	696	657
	Y	1191	1168	1135	1112	1081	1055	1024	998
ON OFF OFF	Ylo	653	597	552	507	460	410	366	326
	Y	914	874	841	805	772	732	696	657
ON ON OFF	Ylo	653	597	552	507	460	410	366	326
	Y	1191	1168	1135	1112	1081	1055	1024	998
OFF ON OFF^	Ylo	914	874	841	805	772	732	696	657
	Y	721	679	635	591	552	505	463	422
OFF OFF ON	Ylo	914	874	841	805	772	732	696	657
	Y	1070	1040	1005	975	942	915	883	849
OFF ON ON^	Ylo	653	597	552	507	460	410	366	326
	Y	721	679	635	591	552	505	463	422
ON OFF ON	Ylo	1070	1040	1005	975	942	915	883	849
	Y	1191	1168	1135	1112	1081	1055	1024	998
ON ON ON^	Ylo	1070	1040	1005	975	942	915	883	849
	Y	653	597	552	507	460	410	366	326

PCBBF139	*MEC960403AN - CONTINOUS FAN								
DIP Switches	STATIC	0.1	0.2	0.3	0.4	0.5	0.6	0.7	0.8
S2-2 S2-3 S2-4	T STAT CALL	CFM	CFM	CFM	CFM	CFM	CFM	CFM	CFM
OFF OFF OFF	G	721	679	635	591	552	505	463	422
ON OFF OFF	G	1070	1040	1005	975	942	915	883	849
ON ON OFF	G	653	597	552	507	460	410	366	326
OFF ON OFF	G	914	874	841	805	772	732	696	657
OFF OFF ON	G	1191	1168	1135	1112	1081	1055	1024	998
OFF ON ON	G	721	679	635	591	552	505	463	422
ON OFF ON	G	721	679	635	591	552	505	463	422
ON ON ON	G	721	679	635	591	552	505	463	422

PCBBF139	*MEC960403AN - HEATING													
DIP Switches	STATIC	0.1		0.2		0.3		0.4		0.5		0.6	0.7	0.8
S1-4 S2-1	T STAT CALL	CFM	RISE	CFM	RISE	CFM	RISE	CFM	RISE	CFM	RISE	CFM	CFM	CFM
OFF OFF*	W1	721	35	679	37	635	39	591	42	552	45	505	463	422
	W2	1070	33	1040	34	1005	35	975	36	942	38	915	883	849
ON OFF	W1	653	38	597	42	552	45	507	49	460	N/A	410	366	326
	W2	1070	33	1040	34	1005	35	975	36	942	38	915	883	849
ON ON	W1	653	38	597	42	552	45	507	49	460	N/A	410	366	326
	W2	914	39	874	41	841	42	805	44	772	46	732	696	657
OFF ON	W1	914	27	874	28	841	30	805	31	772	32	732	696	657
	W2	1191	30	1168	30	1135	31	1112	32	1081	33	1055	1024	998

*DEFAULT
**NOT RECOMMENDED
^SINGLE STAGE COOLING

DIP SWITCH SETTINGS

PCBBF139	*MEC960603AN - COOLING								
DIP Switches	STATIC	0.1	0.2	0.3	0.4	0.5	0.6	0.7	0.8
S1-1 S1-2 S1-3	T STAT CALL	CFM	CFM	CFM	CFM	CFM	CFM	CFM	CFM
OFF OFF OFF*	Ylo	880	838	794	763	722	689	644	606
	Y	1056	1026	991	961	929	894	864	829
ON OFF OFF	Ylo	697	654	600	557	508	460	419	371
	Y	880	838	794	763	722	689	644	606
ON ON OFF	Ylo	697	654	600	557	508	460	419	371
	Y	1056	1026	991	961	929	894	864	829
OFF ON OFF^	Ylo	880	838	794	763	722	689	644	606
	Y	1254	1230	1199	1171	1139	1115	1086	1053
OFF OFF ON	Ylo	880	838	794	763	722	689	644	606
	Y	1330	1301	1274	1244	1227	1191	1163	1132
OFF ON ON^	Ylo	697	654	600	557	508	460	419	371
	Y	1254	1230	1199	1171	1139	1115	1086	1053
ON OFF ON	Ylo	1330	1301	1274	1244	1227	1191	1163	1132
	Y	1056	1026	991	961	929	894	864	829
ON ON ON^	Ylo	1330	1301	1274	1244	1227	1191	1163	1132
	Y	697	654	600	557	508	460	419	371

PCBBF139	*MEC960603AN - CONTINOUS FAN								
DIP Switches	STATIC	0.1	0.2	0.3	0.4	0.5	0.6	0.7	0.8
S2-2 S2-3 S2-4	T STAT CALL	CFM	CFM	CFM	CFM	CFM	CFM	CFM	CFM
OFF OFF OFF	G	1254	1230	1199	1171	1139	1115	1086	1053
ON OFF OFF	G	1330	1301	1274	1244	1227	1191	1163	1132
ON ON OFF	G	697	654	600	557	508	460	419	371
OFF ON OFF	G	880	838	794	763	722	689	644	606
OFF OFF ON	G	1056	1026	991	961	929	894	864	829
OFF ON ON	G	1254	1230	1199	1171	1139	1115	1086	1053
ON OFF ON	G	1254	1230	1199	1171	1139	1115	1086	1053
ON ON ON	G	1254	1230	1199	1171	1139	1115	1086	1053

PCBBF139	*MEC960603AN - HEATING													
DIP Switches	STATIC	0.1		0.2		0.3		0.4		0.5		0.6	0.7	0.8
S1-4 S2-1	T STAT CALL	CFM	RISE	CFM	RISE	CFM	RISE	CFM	RISE	CFM	RISE	CFM	CFM	CFM
OFF OFF**	W1	1254	N/A	1230	N/A	1199	N/A	1171	N/A	1139	N/A	1115	1086	1053
	W2	1330	N/A	1301	N/A	1274	N/A	1244	N/A	1227	N/A	1191	1163	1132
ON OFF**	W1	697	N/A	654	N/A	600	N/A	557	N/A	508	N/A	460	419	371
	W2	1330	N/A	1301	N/A	1274	N/A	1244	N/A	1227	N/A	1191	1163	1132
ON ON**	W1	697	N/A	654	N/A	600	N/A	557	N/A	508	N/A	460	419	371
	W2	880	N/A	838	N/A	794	N/A	763	N/A	722	N/A	689	644	606
OFF ON	W1	880	42	838	45	794	47	763	49	722	50	689	644	606
	W2	1056	49	1026	51	991	52	961	54	929	56	894	864	829

*DEFAULT
**NOT RECOMMENDED
^SINGLE STAGE COOLING

DIP SWITCH SETTINGS

PCBBF139	*MEC960603BN - COOLING								
DIP Switches	STATIC	0.1	0.2	0.3	0.4	0.5	0.6	0.7	0.8
S1-1 S1-2 S1-3	T STAT CALL	CFM	CFM	CFM	CFM	CFM	CFM	CFM	CFM
OFF OFF OFF*	Ylo	1332	1291	1252	1218	1173	1134	1088	1049
	Y	1240	1194	1153	1104	1069	1019	971	929
ON OFF OFF	Ylo	781	628	547	470	396	333	N/A	N/A
	Y	1332	1291	1252	1218	1173	1134	1088	1049
ON ON OFF	Ylo	781	628	547	470	396	333	N/A	N/A
	Y	1240	1194	1153	1104	1069	1019	971	929
OFF ON OFF^	Ylo	1332	1291	1252	1218	1173	1134	1088	1049
	Y	936	888	832	778	723	657	603	549
OFF OFF ON	Ylo	1332	1291	1252	1218	1173	1134	1088	1049
	Y	1149	1101	1052	1006	967	916	866	821
OFF ON ON	Ylo	781	628	547	470	396	333	N/A	N/A
	Y	936	888	832	778	723	657	603	549
ON OFF ON^	Ylo	1149	1101	1052	1006	967	916	866	821
	Y	1240	1194	1153	1104	1069	1019	971	929
ON ON ON^	Ylo	1149	1101	1052	1006	967	916	866	821
	Y	781	628	547	470	396	333	N/A	N/A

PCBBF139	*MEC960603BN - CONTINOUS FAN								
DIP Switches	STATIC	0.1	0.2	0.3	0.4	0.5	0.6	0.7	0.8
S2-2 S2-3 S2-4	T STAT CALL	CFM	CFM	CFM	CFM	CFM	CFM	CFM	CFM
OFF OFF OFF	G	936	888	832	778	723	657	603	549
ON OFF OFF	G	1149	1101	1052	1006	967	916	866	821
ON ON OFF	G	781	628	547	470	396	333	N/A	N/A
OFF ON OFF	G	1332	1291	1252	1218	1173	1134	1088	1049
OFF OFF ON	G	1240	1194	1153	1104	1069	1019	971	929
OFF ON ON	G	936	888	832	778	723	657	603	549
ON OFF ON	G	936	888	832	778	723	657	603	549
ON ON ON	G	936	888	832	778	723	657	603	549

PCBBF139	*MEC960603BN - HEATING													
DIP Switches	STATIC	0.1		0.2		0.3		0.4		0.5		0.6	0.7	0.8
S1-4 S2-1	T STAT CALL	CFM	RISE	CFM	RISE	CFM	RISE	CFM	RISE	CFM	RISE	CFM	CFM	CFM
OFF OFF*	W1	936	40	888	42	832	45	778	48	723	52	657	603	549
	W2	1149	46	1101	48	1052	51	1006	53	967	55	916	866	821
ON OFF**	W1	781	N/A	628	N/A	547	N/A	470	N/A	396	N/A	333	N/A	N/A
	W2	1149	N/A	1101	N/A	1052	N/A	1006	N/A	967	N/A	916	866	821
ON ON**	W1	781	N/A	628	N/A	547	N/A	470	N/A	396	N/A	333	N/A	N/A
	W2	1332	N/A	1291	N/A	1252	N/A	1218	N/A	1173	N/A	1134	1088	1049
OFF ON**	W1	1332	N/A	1292	N/A	1252	N/A	1218	N/A	1173	N/A	1134	1088	1049
	W2	1240	N/A	1194	N/A	1153	N/A	1104	N/A	1069	N/A	1019	971	929

*DEFAULT
**NOT RECOMMENDED
^SINGLE STAGE COOLING

DIP SWITCH SETTINGS

PCBBF139	*MEC960803BN - COOLING								
DIP Switches	STATIC	0.1	0.2	0.3	0.4	0.5	0.6	0.7	0.8
S1-1 S1-2 S1-3	T STAT CALL	CFM	CFM	CFM	CFM	CFM	CFM	CFM	CFM
OFF OFF OFF*	Ylo	899	847	788	770	685	621	565	521
	Y	1226	1177	1133	1091	1052	1008	962	923
ON OFF OFF	Ylo	760	652	576	512	446	392	331	N/A
	Y	899	847	788	770	685	621	565	521
ON ON OFF	Ylo	760	652	576	512	446	392	331	N/A
	Y	1226	1177	1133	1091	1052	1008	962	923
OFF ON OFF	Ylo	899	847	788	770	685	621	565	521
	Y	1123	1078	1035	993	949	894	809	758
OFF OFF ON	Ylo	899	847	788	770	685	621	565	521
	Y	1318	1299	1254	1207	1175	1124	1089	1042
OFF ON ON	Ylo	760	652	576	512	446	392	331	N/A
	Y	1123	1078	1035	993	949	894	809	758
ON OFF ON^	Ylo	1318	1299	1254	1207	1175	1124	1089	1042
	Y	1226	1177	1133	1091	1052	1008	962	923
ON ON ON^	Ylo	1318	1299	1254	1207	1175	1124	1089	1042
	Y	760	652	576	512	446	392	331	N/A

PCBBF139	*MEC960803BN - CONTINOUS FAN								
DIP Switches	STATIC	0.1	0.2	0.3	0.4	0.5	0.6	0.7	0.8
S2-2 S2-3 S2-4	T STAT CALL	CFM	CFM	CFM	CFM	CFM	CFM	CFM	CFM
OFF OFF OFF	G	1123	1078	1035	993	949	894	809	758
ON OFF OFF	G	1318	1299	1254	1207	1175	1124	1089	1042
ON ON OFF	G	760	652	576	512	446	392	331	N/A
OFF ON OFF	G	899	847	788	770	685	621	565	521
OFF OFF ON	G	1226	1177	1133	1091	1052	1008	962	923
OFF ON ON	G	1123	1078	1035	993	949	894	809	758
ON OFF ON	G	1123	1078	1035	993	949	894	809	758
ON ON ON	G	1123	1078	1035	993	949	894	809	758

PCBBF139	*MEC960803BN - HEATING													
DIP Switches	STATIC	0.1		0.2		0.3		0.4		0.5		0.6	0.7	0.8
S1-4 S2-1	T STAT CALL	CFM	RISE	CFM	RISE	CFM	RISE	CFM	RISE	CFM	RISE	CFM	CFM	CFM
OFF OFF*	W1	1123	44	1078	46	1035	48	993	50	949	52	894	809	758
	W2	1318	54	1299	55	1254	57	1207	59	1175	61	1124	1089	1042
ON OFF**	W1	760	N/A	652	N/A	576	N/A	512	N/A	446	N/A	392	331	N/A
	W2	1318	N/A	1299	N/A	1254	N/A	1207	N/A	1175	N/A	1124	1089	1042
ON ON**	W1	760	N/A	652	N/A	576	N/A	512	N/A	446	N/A	392	331	N/A
	W2	899	N/A	847	N/A	788	N/A	770	N/A	685	N/A	621	565	521
OFF ON	W1	899	55	847	59	788	63	770	65	685	N/A	621	565	521
	W2	1226	58	1177	60	1133	63	1091	65	1052	N/A	1008	962	923

*DEFAULT
**NOT RECOMMENDED
^SINGLE STAGE COOLING

DIP SWITCH SETTINGS

PCBBF139	*MEC960804CN - COOLING								
DIP Switches	STATIC	0.1	0.2	0.3	0.4	0.5	0.6	0.7	0.8
S1-1 S1-2 S1-3	T STAT CALL	CFM	CFM	CFM	CFM	CFM	CFM	CFM	CFM
OFF OFF OFF*	Ylo	1185	1121	1058	992	933	868	808	750
	Y	1727	1691	1642	1600	1545	1504	1449	1410
ON OFF OFF^	Ylo	1408	1337	1279	1218	1167	1112	1062	999
	Y	1185	1121	1058	992	933	868	808	750
ON ON OFF	Ylo	1408	1337	1279	1218	1167	1112	1062	999
	Y	1727	1691	1642	1600	1545	1504	1449	1410
OFF ON OFF	Ylo	1185	1121	1058	992	933	868	808	750
	Y	1281	1220	1152	1096	1031	978	914	856
OFF OFF ON	Ylo	1185	1121	1058	992	933	868	808	750
	Y	1839	1790	1757	1699	1665	1615	1568	1527
OFF ON ON^	Ylo	1408	1337	1279	1218	1167	1112	1062	999
	Y	1281	1220	1152	1096	1031	978	914	856
ON OFF ON^	Ylo	1839	1790	1757	1699	1665	1615	1568	1527
	Y	1727	1691	1642	1600	1545	1504	1449	1410
ON ON ON^	Ylo	1839	1790	1757	1699	1665	1615	1568	1527
	Y	1408	1337	1279	1218	1167	1112	1062	999

PCBBF139	*MEC960804CN - CONTINOUS FAN								
DIP Switches	STATIC	0.1	0.2	0.3	0.4	0.5	0.6	0.7	0.8
S2-2 S2-3 S2-4	T STAT CALL	CFM	CFM	CFM	CFM	CFM	CFM	CFM	CFM
OFF OFF OFF	G	1281	1220	1152	1096	1031	978	914	856
ON OFF OFF	G	1839	1790	1757	1699	1665	1615	1568	1527
ON ON OFF	G	1408	1337	1279	1218	1167	1112	1062	999
OFF ON OFF	G	1185	1121	1058	992	933	868	808	750
OFF OFF ON	G	1727	1691	1642	1600	1545	1504	1449	1410
OFF ON ON	G	1281	1220	1152	1096	1031	978	914	856
ON OFF ON	G	1281	1220	1152	1096	1031	978	914	856
ON ON ON	G	1281	1220	1152	1096	1031	978	914	856

PCBBF139	*MEC960804CN - HEATING													
DIP Switches	STATIC	0.1		0.2		0.3		0.4		0.5		0.6	0.7	0.8
S1-4 S2-1	T STAT CALL	CFM	RISE	CFM	RISE	CFM	RISE	CFM	RISE	CFM	RISE	CFM	CFM	CFM
OFF OFF*	W1	1281	39	1220	41	1152	43	1096	45	1031	48	978	914	856
	W2	1839	39	1790	40	1757	40	1699	42	1665	43	1615	1568	1527
ON OFF**	W1	1408	N/A	1337	N/A	1279	N/A	1218	N/A	1167	N/A	1112	1062	999
	W2	1839	N/A	1790	N/A	1757	N/A	1699	N/A	1665	N/A	1615	1568	1527
ON ON**	W1	1408	N/A	1337	N/A	1279	N/A	1218	N/A	1167	N/A	1112	1062	999
	W2	1185	N/A	1121	N/A	1058	N/A	992	N/A	933	N/A	868	808	750
OFF ON	W1	1185	42	1121	44	1058	47	992	50	933	53	868	808	750
	W2	1727	41	1691	42	1642	43	1600	44	1545	46	1504	1449	1410

*DEFAULT
**NOT RECOMMENDED
^SINGLE STAGE COOLING

DIP SWITCH SETTINGS

PCBBF139	*MEC961004CN - COOLING								
DIP Switches	STATIC	0.1	0.2	0.3	0.4	0.5	0.6	0.7	0.8
S1-1 S1-2 S1-3	T STAT CALL	CFM	CFM	CFM	CFM	CFM	CFM	CFM	CFM
OFF OFF OFF*	Ylo	1312	1235	1170	1101	1037	962	880	820
	Y	1772	1713	1662	1609	1540	1498	1452	1399
ON OFF OFF^	Ylo	1004	890	805	710	620	553	474	406
	Y	1312	1235	1170	1101	1037	962	880	820
ON ON OFF	Ylo	1004	890	805	710	620	553	474	406
	Y	1772	1713	1662	1609	1540	1498	1452	1399
OFF ON OFF	Ylo	1312	1235	1170	1101	1037	962	880	820
	Y	1522	1464	1402	1338	1280	1230	1167	1101
OFF OFF ON	Ylo	1312	1235	1170	1101	1037	962	880	820
	Y	1861	1803	1749	1698	1653	1594	1549	1504
OFF ON ON^	Ylo	1004	890	805	710	620	553	474	406
	Y	1522	1464	1402	1338	1280	1230	1167	1101
ON OFF ON^	Ylo	1861	1803	1749	1698	1653	1594	1549	1504
	Y	1772	1713	1662	1609	1540	1498	1452	1399
ON ON ON^	Ylo	1861	1803	1749	1698	1653	1594	1549	1504
	Y	1004	890	805	710	620	553	474	406

PCBBF139	*MEC961004CN - CONTINOUS FAN								
DIP Switches	STATIC	0.1	0.2	0.3	0.4	0.5	0.6	0.7	0.8
S2-2 S2-3 S2-4	T STAT CALL	CFM	CFM	CFM	CFM	CFM	CFM	CFM	CFM
OFF OFF OFF	G	1522	1464	1402	1338	1280	1230	1167	1101
ON OFF OFF	G	1861	1803	1749	1698	1653	1594	1549	1504
ON ON OFF	G	1004	890	805	710	620	553	474	406
OFF ON OFF	G	1312	1235	1170	1101	1037	962	880	820
OFF OFF ON	G	1772	1713	1662	1609	1540	1498	1452	1399
OFF ON ON	G	1522	1464	1402	1338	1280	1230	1167	1101
ON OFF ON	G	1522	1464	1402	1338	1280	1230	1167	1101
ON ON ON	G	1522	1464	1402	1338	1280	1230	1167	1101

PCBBF139	*MEC961004CN - HEATING													
DIP Switches	STATIC	0.1		0.2		0.3		0.4		0.5		0.6	0.7	0.8
S1-4 S2-1	T STAT CALL	CFM	RISE	CFM	RISE	CFM	RISE	CFM	RISE	CFM	RISE	CFM	CFM	CFM
OFF OFF*	W1	1522	41	1464	43	1402	44	1338	47	1280	49	1230	1167	1101
	W2	1861	48	1803	49	1749	51	1698	52	1653	54	1594	1549	1504
ON OFF**	W1	1004	N/A	890	N/A	805	N/A	710	N/A	620	N/A	553	474	406
	W2	1861	N/A	1803	N/A	1749	N/A	1698	N/A	1653	N/A	1594	1549	1504
ON ON**	W1	1004	N/A	890	N/A	805	N/A	710	N/A	620	N/A	553	474	406
	W2	1312	N/A	1235	N/A	1170	N/A	1101	N/A	1037	N/A	962	880	820
OFF ON	W1	1312	47	1235	50	1170	53	1101	57	1037	60	962	880	820
	W2	1772	50	1713	52	1662	53	1609	55	1540	58	1498	1452	1399

*DEFAULT
**NOT RECOMMENDED
^SINGLE STAGE COOLING

DIP SWITCH SETTINGS

PCBBF139	*MEC961005CN - COOLING								
DIP Switches	STATIC	0.1	0.2	0.3	0.4	0.5	0.6	0.7	0.8
S1-1 S1-2 S1-3	T STAT CALL	CFM	CFM	CFM	CFM	CFM	CFM	CFM	CFM
OFF OFF OFF*	Ylo	1384	1324	1271	1204	1145	1088	1029	985
	Y	2008	1963	1944	1916	1876	1839	1801	1759
ON OFF OFF^	Ylo	1438	1366	1309	1254	1163	1133	1077	1013
	Y	1384	1324	1271	1204	1145	1088	1029	985
ON ON OFF	Ylo	1438	1366	1309	1254	1163	1133	1077	1013
	Y	2008	1963	1944	1916	1876	1839	1801	1759
OFF ON OFF^	Ylo	1384	1324	1271	1204	1145	1088	1029	985
	Y	1283	1219	1162	1109	1036	974	917	864
OFF OFF ON	Ylo	1384	1324	1271	1204	1145	1088	1029	985
	Y	1811	1772	1733	1690	1644	1590	1551	1492
OFF ON ON^	Ylo	1438	1366	1309	1254	1163	1133	1077	1013
	Y	1283	1219	1162	1109	1036	974	917	864
ON OFF ON	Ylo	1811	1772	1733	1690	1644	1590	1551	1492
	Y	2008	1963	1944	1916	1876	1839	1801	1759
ON ON ON^	Ylo	1811	1772	1733	1690	1644	1590	1551	1492
	Y	1438	1366	1309	1254	1163	1133	1077	1013

PCBBF139	*MEC961005CN - CONTINOUS FAN								
DIP Switches	STATIC	0.1	0.2	0.3	0.4	0.5	0.6	0.7	0.8
S2-2 S2-3 S2-4	T STAT CALL	CFM	CFM	CFM	CFM	CFM	CFM	CFM	CFM
OFF OFF OFF	G	1283	1219	1162	1109	1036	974	917	864
ON OFF OFF	G	1811	1772	1733	1690	1644	1590	1551	1492
ON ON OFF	G	1438	1366	1309	1254	1163	1133	1077	1013
OFF ON OFF	G	1384	1324	1271	1204	1145	1088	1029	985
OFF OFF ON	G	2008	1963	1944	1916	1876	1839	1801	1759
OFF ON ON	G	1283	1219	1162	1109	1036	974	917	864
ON OFF ON	G	1283	1219	1162	1109	1036	974	917	864
ON ON ON	G	1283	1219	1162	1109	1036	974	917	864

PCBBF139	*MEC961005CN - HEATING													
DIP Switches	STATIC	0.1		0.2		0.3		0.4		0.5		0.6	0.7	0.8
S1-4 S2-1	T STAT CALL	CFM	RISE	CFM	RISE	CFM	RISE	CFM	RISE	CFM	RISE	CFM	CFM	CFM
OFF OFF*	W1	1283	48	1219	51	1162	54	1109	56	1036	60	974	917	864
	W2	1811	49	1772	50	1733	51	1690	53	1644	54	1590	1551	1492
ON OFF**	W1	1438	N/A	1366	N/A	1309	N/A	1254	N/A	1163	N/A	1133	1077	1013
	W2	1811	N/A	1772	N/A	1733	N/A	1690	N/A	1644	N/A	1590	1551	1492
ON ON**	W1	1438	N/A	1366	N/A	1309	N/A	1254	N/A	1163	N/A	1133	1077	1013
	W2	1384	N/A	1324	N/A	1271	N/A	1204	N/A	1145	N/A	1088	1029	985
OFF ON	W1	1384	45	1324	47	1271	49	1204	52	1145	54	1088	1029	985
	W2	2008	44	1963	45	1944	46	1916	46	1876	47	1839	1801	1759

*DEFAULT
**NOT RECOMMENDED
^SINGLE STAGE COOLING

DIP SWITCH SETTINGS

PCBBF139	*MEC961205DN - COOLING								
DIP Switches	STATIC	0.1	0.2	0.3	0.4	0.5	0.6	0.7	0.8
S1-1 S1-2 S1-3	T STAT CALL	CFM	CFM	CFM	CFM	CFM	CFM	CFM	CFM
OFF OFF OFF*	Ylo	1399	1327	1259	1185	1119	1051	980	913
	Y	1683	1628	1565	1511	1445	1387	1340	1276
ON OFF OFF^	Ylo	1106	1017	946	855	764	681	605	550
	Y	1399	1327	1259	1185	1119	1051	980	913
ON ON OFF	Ylo	1106	1017	946	855	764	681	605	550
	Y	1683	1628	1565	1511	1445	1387	1340	1276
OFF ON OFF^	Ylo	1399	1327	1259	1185	1119	1051	980	913
	Y	1796	1753	1697	1645	1589	1536	1478	1425
OFF OFF ON	Ylo	1399	1327	1259	1185	1119	1051	980	913
	Y	2211	2163	2122	2076	2029	1986	1964	1942
OFF ON ON^	Ylo	1106	1017	946	855	764	681	605	550
	Y	1796	1753	1697	1645	1589	1536	1478	1425
ON OFF ON^	Ylo	2211	2163	2122	2076	2029	1986	1964	1942
	Y	1683	1628	1565	1511	1445	1387	1340	1276
ON ON ON^	Ylo	2211	2163	2122	2076	2029	1986	1964	1942
	Y	1106	1017	946	855	764	681	605	550

PCBBF139	*MEC961205DN - CONTINOUS FAN								
DIP Switches	STATIC	0.1	0.2	0.3	0.4	0.5	0.6	0.7	0.8
S2-2 S2-3 S2-4	T STAT CALL	CFM	CFM	CFM	CFM	CFM	CFM	CFM	CFM
OFF OFF OFF	G	1796	1753	1697	1645	1589	1536	1478	1425
ON OFF OFF	G	2211	2163	2122	2076	2029	1986	1964	1942
ON ON OFF	G	1106	1017	946	855	764	681	605	550
OFF ON OFF	G	1399	1327	1259	1185	1119	1051	980	913
OFF OFF ON	G	1683	1628	1565	1511	1445	1387	1340	1276
OFF ON ON	G	1796	1753	1697	1645	1589	1536	1478	1425
ON OFF ON	G	1796	1753	1697	1645	1589	1536	1478	1425
ON ON ON	G	1796	1753	1697	1645	1589	1536	1478	1425

PCBBF139	*MEC961205DN - HEATING													
DIP Switches	STATIC	0.1		0.2		0.3		0.4		0.5		0.6	0.7	0.8
S1-4 S2-1	T STAT CALL	CFM	RISE	CFM	RISE	CFM	RISE	CFM	RISE	CFM	RISE	CFM	CFM	CFM
OFF OFF*	W1	1796	42	1753	43	1697	44	1645	45	1589	47	1536	1478	1425
	W2	2211	48	2163	49	2122	50	2076	51	2029	53	1986	1964	1942
ON OFF**	W1	1106	N/A	1017	N/A	946	N/A	855	N/A	764	N/A	681	605	550
	W2	2211	N/A	2163	N/A	2122	N/A	2076	N/A	2029	N/A	1986	1964	1942
ON ON**	W1	1106	N/A	1017	N/A	946	N/A	855	N/A	764	N/A	681	605	550
	W2	1399	N/A	1327	N/A	1259	N/A	1185	N/A	1119	N/A	1051	980	913
OFF ON	W1	1399	53	1327	56	1259	59	1185	63	1119	N/A	1051	980	913
	W2	1683	63	1628	66	1565	N/A	1511	N/A	1445	N/A	1387	1340	1276

*DEFAULT
**NOT RECOMMENDED
^SINGLE STAGE COOLING

NORMAL SEQUENCE OF OPERATION

Power Up

- When power is supplied, the control will energize the Red LED, microcomputer runs its self-check routine.
- The control will check the status of the gas valve circuitry.
- Line polarity is checked.
- The control then enters standby waiting for a call for heat or cool.
- The Furnace status LED will display a slow green flash signaling standby mode.

Heating Mode

Call for 1st Stage Heat Only:

- On a call for first stage heat, the thermostat contacts close signaling the control module.
- The microcomputer runs its self-check routine.
- The Amber LED will display a slow flash signaling normal heat operation.
- The control module checks the high limit (and/or auxiliary limit) switch(es) for normally closed contacts.
- The control checks the low pressure switch for a shorted condition
- The gas valve relay status is checked for proper operation. Once the low pressure switch is detected open, the inducer blower is energized at high speed and the humidifier is enabled.
- The low pressure switch is checked for closure.
- Once the low pressure switch is closed, the pre-purge period begins. The inducer will be energized at high speed for the pre-purge period.
- Following the completion of pre-purge, the inducer switches to low speed and the igniter warm up period begins.
- After completion of the igniter warm up period:
  a. Trial for ignition begins.
  b. The first stage of the gas valve is energized.
- The igniter is de-energized when flame is sensed or at the conclusion of the ignition activation period (IAP), whichever comes first.
- When flame is sensed, the delay to heat on period begins timing.
- After the delay to heat on period, the circulator fan is energized at the low heat speed.
- The EAC contact is energized with the circulator.

Call for 2nd Stage After First Stage:

- The inducer motor goes to high speed.
- The pressure switches are checked for closure. Closure of the second stage pressure switch will energize the high fire stage of the gas valve.
- The high speed circulator output is energized.
- **NOTE:** A call for 2nd stage without a call for 1st stage will be ignored, and a three amber flash code will be displayed on the LED. This error code will only be stored in memory once during a single power cycle.

2nd Stage Satisfied, First Stage Still Calling:

- When the second stage of the thermostat is satisfied, the inducer blower is reduced to low speed which de-energizes the second stage of the gas valve.
- After the high heat off delay expires, the circulator is reduced to low heat speed.
- **NOTE:** A call for second stage without a call for first stage will be ignored.

Cooling Mode

Low stage cooling Mode sequence:

- On a call for lo cool, the YLO and G thermostat contacts close signaling the control module.
- The LED will display a “GREEN”1 flash
- The compressor and condenser fan are energized. The compressor is connected to the YLO terminal of the control module.
- The circulator fan is energized at lo cool speed after a cool on delay. The electronic air cleaner will also be energized.
- After the thermostat is satisfied, the compressor is de-energized and the 45 second fan off delay period begins.
- Following the 45 second cool mode fan off delay period, the cool circulator and air cleaner relay are de-energized.

Single cooling stage thermostat or 2nd stage cooling Mode sequence:

- On a call for cool, the Y and G thermostat contacts close signaling the control module.
- The LED will display a “GREEN”2 flash
- The compressor and condenser fan are energized. The circulator fan is energized at cool speed after a cool on delay. The electronic air cleaner will also be energized.
- After the thermostat is satisfied, the compressor is de-energized and the fan off delay period begins.
- Following the 45 second fan off delay period, the cool circulator and air cleaner relay are de-energized.

Note: If a call for both YLO and Y are present, Y will have priority.

Fan Only Mode

MANUAL FAN ON:

- Call for continuous fan (24 volts on the furnace “G” terminal.)
- The LED will display rapid “GREEN”.
- The circulator blower and the electronic air cleaner terminal are energized.

OPERATIONAL CHECKS

The burner flames should be inspected with the burner compartment door installed. Flames should be stable, quiet, soft, and blue (dust may cause orange tips but they must not be yellow). Flames should extend directly outward from the burners without curling, floating, or lifting off. Flames must not impinge on the sides of the heat exchanger firing tubes.

SAFETY CIRCUIT DESCRIPTION

WARNING

Do not bypass safety devices.

A number of safety circuits are employed to ensure safe and proper furnace operation. These circuits serve to control any potential safety hazards and serve as inputs in the monitoring and diagnosis of abnormal function. These circuits are continuously monitored during furnace operation by the integrated control module.

Integrated Control Module

The integrated control module is an electronic device which, if a potential safety concern is detected, will take the necessary precautions and provide diagnostic information through an LED.

Primary Limit

The primary limit control is located on the partition panel and monitors heat exchanger compartment temperatures. It is a normally-closed (electrically), automatic reset, temperature-activated sensor. The limit guards against overheating as a result of insufficient conditioned air passing over the heat exchanger.

Auxiliary Limit

The auxiliary limit controls are located on or near the circulator blower and monitors blower compartment temperatures. They are a normally-closed (electrically), manual-reset sensors. These limits guard against overheating as a result of insufficient conditioned air passing over the heat exchanger.

Rollout Limit

The rollout limit controls are mounted on the burner/manifold assembly and monitor the burner flame. They are normally-closed (electrically), manual-reset sensors. These limits guard against burner flames not being properly drawn into the heat exchanger.

Pressure Switches

The pressure switches are normally-open (closed during operation) negative air pressure-activated switches. They monitor the airflow (combustion air and flue products) through the heat exchanger via pressure taps located on the induced draft blower and the coil front cover. These switches guard against insufficient airflow (combustion air and flue products) through the heat exchanger and/or blocked condensate drain conditions.

Flame Sensor

The flame sensor is a probe mounted to the burner/manifold assembly which uses the principle of flame rectification to determine the presence or absence of flame.

TROUBLESHOOTING

Electrostatic Discharge (ESD) Precautions

NOTE: Discharge body's static electricity before touching unit. An electrostatic discharge can adversely affect electrical components.

Use the following precautions during furnace installation and servicing to protect the integrated control module from damage. By putting the furnace, the control, and the person at the same electrostatic potential, these steps will help avoid exposing the integrated control module to electrostatic discharge. This procedure is applicable to both installed and uninstalled (ungrounded) furnaces.

1. Disconnect all power to the furnace. Do not touch the integrated control module or any wire connected to the control prior to discharging your body's electrostatic charge to ground.
2. Firmly touch a clean, unpainted, metal surface of the furnace away from the control. Any tools held in a person's hand during grounding will be discharged.
3. Service integrated control module or connecting wiring following the discharge process in step 2. Use caution not to recharge your body with static electricity; (i.e., do not move or shuffle your feet, do not touch ungrounded objects, etc.). If you come in contact with an ungrounded object, repeat step 2 before touching control or wires.
4. Discharge your body to ground before removing a new control from its container. Follow steps 1 through 3 if installing the control on a furnace. Return any old or new controls to their containers before touching any ungrounded object.

Checking Flame Signal

Flame current can be measured in two ways:

1. Putting a D.C. microamp meter in series with the flame rod
2. Putting a D.C. volt meter across the two solder pads in the flame current section of the control board.
3. 1 D.C. volt = 1 microamp. See Figure 46.

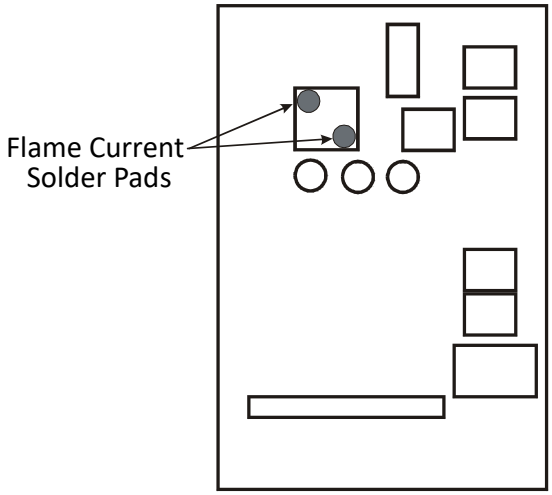

Figure 46

Limit Fault Codes

If the control detects the high limit circuit open, the RED LED will flash FOUR times and energize the inducer and indoor blower.

If the limit circuit opens five times within a single call for heat, the furnace will go into lockout for one hour. The RED LED will display a FOUR flash code during this time. The control board can be reset by cycling 115 volt power to the furnace.

If the limit circuit opens and does not close within five minutes, the control assumes the blower has failed the RED LED will flash ELEVEN times.

If the limit circuit opens and does not close within fifteen minutes, the control assumes the manual rollout or fuse has opened and the RED LED will flash FIVE times. The control will enter a one hour lockout and the inducer will run continuously.

In an open limit condition the red LED will flash as described above but the error code will not be stored in memory until the limit resets or until 15 minutes has elapsed. So if the limit resets in less than 5 minutes a four flash code will be stored. If the limit resets in more than 5 but less than 15 minutes, an eleven flash code will be stored. If the limit is still open after 15 minutes, a five flash code will be stored.

Diagnostic Chart

Refer to the *Troubleshooting Chart* in the back of this manual for assistance in determining the source of unit operational problems.

External Lockout

- A control lockout resulting from an external fault sensed by the control, such as an unsuccessful recycle or retry period, or a limit trip. Once in External Lockout, the control will shut down for a period of one hour before attempting another trial for ignition.

Internal Lockout

- A failure internal to the control board.

Fault Recall

Retrieving Fault Codes

To retrieve fault codes, push and release the “LAST ERROR” button for more than 1/ 5 second and less than 5 seconds (the LED will indicate this period by solid GREEN for 1/5 second to 5 seconds). The LED will flash up to five stored fault codes, beginning with the most recent. If there are no fault codes in memory, the LED will flash two green flashes. The control will flash the most recent error first and the oldest error last. If multiple faults exist there will be 2 seconds between codes. Solid LED error codes will not be displayed.

Fault Code Reset

To clear the fault code memory, push and hold the "LAST ERROR" button for more than 5 seconds and less than 10 seconds (the LED will indicate this period by RAPID GREEN FLASH for 5 seconds to 10 seconds). The LED will flash three green flashes when the memory has been cleared.

The ignition control is equipped with a momentary push button switch that can be used to display on the diagnostic LED the last five faults detected by the control. The control must be in Standby Mode (no thermostat inputs) to use the feature. Depress the push button switch for approximately 2 seconds. Release the switch when the LED is turned off. The diagnostic LED will then display the flash codes associated with the last five detected faults. The order of display is the most recent fault to the least recent fault.

Resetting From Lockout

Furnace lockout results when a furnace is unable to achieve ignition after three attempts during a single call for heat. It is characterized by a non-functioning furnace and a one flash diagnostic LED code. If the furnace is in "lockout", it can be reset in any of the following ways.

1. Automatic reset. The integrated control module will automatically reset itself and attempt to resume normal operations following a one hour lockout period.
2. Manual power interruption. Interrupt 115 volt power to the furnace for 1 - 20 seconds.
3. Manual thermostat cycle. Lower the thermostat so that there is no longer a call for heat then reset to previous setting. Interrupt thermostat signal to the furnace for 1 - 20 seconds.

NOTE: If the condition which originally caused the lockout still exists, the control will return to lockout. Refer to the *Troubleshooting Chart* for aid in determining the cause.

Green LED Flash	Amber LED Flash	Red LED Flash	Error/Condition
		1	Flame sensed when no flame should be present
		2	Pressure Switch Stuck Closed/ Inducer Error
		3	1st-stage Pressure Switch Stuck Open/ Inducer Error
		4	Open limit switch
		5	Open Rollout/Open Fuse Detect
		6	Pressure switch cycle lockout
		7	External lockout (retries)
		8	External lockout (recycles)
		9	Grounding or Reversed polarity
		10	Gas flow with no call for heat
		11	Limit switch open – blower failure
		12	Ignitor Relay Failure
		Solid	Internal, GV Error, Micro, and Frequency Check
		Rapid	Twinning error
		3 double	2nd-stage Pressure Switch Stuck Open/ Inducer Error
	1		Normal Operation with call for first stage heat (W1)
	2		Normal Operation with call for second stage heat (W2)
	3		W2 present with no W1
	4		Y present with no G call, Y1 present with no G call.
	Rapid		Low flame sense current
Solid			Standby
Rapid			Normal Operation with call for fan (G)
1			Normal Operation with call for Low stage cool (Ylo + G)
2			Normal Operation with call for High stage cool/or single stage cooling. (Y + G)

MAINTENANCE

WARNING

HIGH VOLTAGE
To avoid personal injury or death due to electrical shock, disconnect electrical power before performing any service or maintenance.

Annual Inspection

The furnace should be inspected by a qualified installer, or service agency at least once per year. This check should be performed at the beginning of the heating season. This will ensure that all furnace components are in proper working order and that the heating system functions appropriately. Pay particular attention to the following items. Repair or service as necessary.

- Flue pipe system. Check for blockage and/or leakage. Check the outside termination and the connections at and internal to the furnace.
- Heat exchanger. Check for corrosion and/or buildup within the heat exchanger passageways.
- Burners. Check for proper ignition, burner flame, and flame sense.
- Drainage system. Check for blockage and/or leakage. Check hose connections at and internal to furnace.
- Wiring. Check electrical connections for tightness and/or corrosion. Check wires for damage.
- Filters.

WARNING

To avoid electrical shock, injury or death, disconnect electrical power before performing any maintenance. If you must handle the igniter, handle with care. Touching the igniter element with bare fingers, rough handling or vibration could damage the igniter resulting in premature failure. Only a qualified servicer should ever handle the igniter.

FILTERS

Filter Maintenance

Improper filter maintenance is the most common cause of inadequate heating or cooling performance. Filters should be cleaned (permanent) or replaced (disposable) every two months or as required. When replacing a filter, it must be replaced with a filter of the same type and size.

CAUTION

To ensure proper unit performance, adhere to the filter sizes given in the recommended Minimum Filter Size Table or Specification Sheet applicable to your model.

Filter Removal

Depending on the installation, differing filter arrangements can be applied. Filters can be installed in either the central return register or a side panel external filter rack (upflow only). A media air filter or electronic air cleaner can be used as an alternate filter. Follow the filter sizes give n in the Recommended Minimum Filter size table to ensure proper unit performance.

To remove filters from an external filter rack in an upright upflow installation, follow the directions provided with external filter rack kit.

Horizontal Unit Filter Removal

Filters in horizontal installations are located in the central return register or the ductwork near the furnace.

To remove:

1. Turn OFF electrical power to furnace.
2. Remove filter(s) from the central return register or ductwork.
3. Replace filter(s) by reversing the procedure for removal.
4. Turn ON electrical power to furnace.

Media Air Filter or Electronic Air Cleaner Removal

Follow the manufacturer's directions for service.

WARNING

HIGH VOLTAGE
To avoid personal injury or death due to electrical shock, disconnect electrical power before performing any service or maintenance.

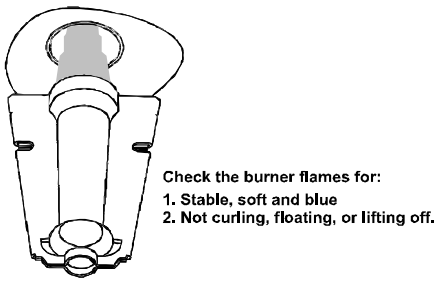

Burner Flame
Figure 47

Burners

Visually inspect the burner flames periodically during the heating season. Turn on the furnace at the thermostat and allow several minutes for flames to stabilize, since any dislodged dust will alter the flames normal appearance. Flames should be stable, quiet, soft, and blue (dust may cause orange tips but they must not be yellow). They should extend directly outward from the burners without curling, floating, or lifting off. Flames must not impinge on the sides of the heat exchanger firing tubes.

Induced Draft and Circulator Blowers

The bearings in the induced draft blower and circulator blower motors are permanently lubricated by the manufacturer. No further lubrication is required. Check motor windings for accumulation of dust which may cause overheating. Clean as necessary.

Condensate Trap and Drain System (Qualified Servicer Only)

Annually inspect the drain tubes, drain trap, and field-supplied drain line for proper condensate drainage. Check drain system for hose connection tightness, blockage, and leaks. Clean or repair as necessary.

WARNING

To avoid electrical shock, injury or death, disconnect electrical power before performing any maintenance. If you must handle the igniter, handle with care. Touching the igniter element with bare fingers, rough handling or vibration could damage the igniter resulting in premature failure. Only a qualified servicer should ever handle the igniter.

Flame Sensor (Qualified Servicer Only)

Under some conditions, the fuel or air supply can create a nearly invisible coating on the flame sensor. This coating acts as an insulator causing a drop in the flame sense signal. If the flame sense signal drops too low the furnace will not sense flame and will lock out. The flame sensor should be carefully cleaned by a qualified servicer using steel wool.

Flue Passages (Qualified Servicer Only)

The heat exchanger flue passageways should be inspected at the beginning of each heating season.

BEFORE LEAVING AN INSTALLATION

- Cycle the furnace with the thermostat at least three times. Verify cooling and fan only operation.
- Review the Owner's Manual with the homeowner and discuss proper furnace operation and maintenance.
- Leave literature packet near furnace.

REPAIR AND REPLACEMENT PARTS

- When ordering any of the listed functional parts, be sure to provide the furnace model, manufacturing, and serial numbers with the order.
- Although only functional parts are shown in the parts list, all sheet metal parts, doors, etc. may be ordered by description.
- Parts are available from your distributor.

Functional Parts List:

Auxiliary Limit Switch
Blower Cutoff
Blower Housing
Blower Motor
Blower Mounting Bracket
Blower Wheel
Coil Front Cover
Door Switch
Flame Sensor
Gas Manifold
Gas Valve
Heat Exchanger
Igniter
Induced Draft Blower
Integrated Control Module
Natural Gas Orifice
Pressure Switch
Primary Limit Switch
Propane Gas Orifice
Recuperator Coil
Rollout Limit Switch
Transformer

TROUBLESHOOTING CHART

Symptoms	Green LED Code	Amber LED Code	Red LED Code	Fault Description	Check	Cautions
•Furnace fails to operate •Control board LED is off	•None	•None	•None	•Defective disconnect switch •defective door switch • No 115 volt power •No 24 volt power	•Determine cause and restore proper high and low volt power supply	•Confirm electrically safe condition before proceeding with repairs
•Furnace is waiting for a call	•Solid ON	•None	•None	•Furnace is not receiving a call	•None Required	•Confirm electrically safe condition before proceeding with work
•Furnace fan only is running	•Rapid Flash	•None	•None	•Furnace is receiving a call for fan (24 volts on G terminal	•None Required	•Confirm electrically safe condition before proceeding with work
•Normal operation with low stage call for cooling (Ylo & G)	•One repeating flash	•None	•None	•Normal operation with low stage call for cooling (Ylo & G)	•None Required	•Confirm electrically safe condition before proceeding with work
•Normal operation with high or single stage call for cooling (Y & G)	•Two repeating flashes	•None	•None	•Normal operation with high or single stage call for cooling (Y & G)	•None Required	•Confirm electrically safe condition before proceeding with work
•Normal operation with low stage call for heat (W1)	•None	•One repeating flash	•None	•Normal operation with low stage call for heat (W1)	•None Required	•Confirm electrically safe condition before proceeding with work
•Normal operation with high or single stage call for heat	•None	•Two repeating flashes	•None	•Normal operation with high or single stage call for heat	•None Required	•Confirm electrically safe condition before proceeding with work
•Furnace does not operate, three Amber flashes on control board	•None	•Three repeating flashes	•None	•W2 call present without W1	•Faulty thermostat or thermostat wiring or improperly connected thermostat wires	•Confirm electrically safe condition before proceeding with repairs
•Furnace does not operate, four Amber flashes on control board	•None	•Four repeating flashes	•None	•Ylo or Y call present without G	•Faulty thermostat or thermostat wiring or improperly connected thermostat wires	•Confirm electrically safe condition before proceeding with repairs
•Furnace does not operate, rapid Amber flashes on control board	•None	•Rapid	•None	•Low flame sense current	•Dirty / coated flame rod, poor flame, improper gas pressure, poor flame sense wire or connections	•Clean flame rod with steel wool. Confirm electrically safe condition before proceeding with repairs
•Furnace does not operate, one Red flash on control board	•None	•None	•One repeating flash	•Flame sensed when no flame should be present	•Gas valve stuck open, improper wiring to gas valve, shorted flame rod or wire	•Confirm electrical and gas safe conditions before proceeding with repairs
•Furnace does not operate, two Red flashes on control board, possible inducer operation	•None	•None	•Two repeating flashes	•Pressure switch stuck closed	•Faulty pressure switch, pressure switch wires shorted, control board inducer relay stuck closed	•Confirm electrically safe condition before proceeding with repairs
•Furnace does not operate, three Red flashes on control board	•None	•None	•Three repeating flashes	•Low fire pressure switch stuck open	•Faulty pressure switch, pressure switch or tubing or wiring / connection, control board inducer relay failed, vent pipe restriction / excessive elbows or length	•Confirm electrically safe condition before proceeding with repairs

TROUBLESHOOTING CHART

Symptoms	Green LED Code	Amber LED Code	Red LED Code	Fault Description	Check	Cautions
•Furnace does not operate, four Red flashes on control board	•None	•None	•Four repeating flashes	•Open limit circuit, main limit, aux limit, or roll out switch	•Temperature rise, duct static, gas pressure, burner alignment, orifice plate position, wiring to all limits	•Confirm electrically safe condition before proceeding with repairs
•Furnace does not operate, five Red flashes on control board	•None	•None	•Five repeating flashes	•Limit & rollout circuit open for 15 minutes. Open control board fuse or rollout switch	•Control board fuse, Temperature rise, duct static, gas pressure, burner alignment, orifice plate position, wiring to all limits	•Confirm electrically safe condition before proceeding with repairs
•Furnace does not operate, six Red flashes on control board	•None	•None	•Six repeating flashes	•Pressure switch cycling lockout, pressure switch has opened 5 times in the same heating cycle	•Excessive venting restriction, leaking pressure switch tubing	•Confirm electrically safe condition before proceeding with repairs
•Furnace does not operate, seven Red flashes on control board	•None	•None	•Seven repeating flashes	•Lockout - excessive retries from flame not being proven during trial for ignition	•Gas pressure, gas valve, front cover pressure switch, flame rod	•Confirm electrical and gas safe conditions before proceeding with repairs
•Furnace does not operate, eight Red flashes on control board	•None	•None	•Eight repeating flashes	• Lockout - excessive recycles from flame proving being lost after being proven	•Gas pressure, gas valve, front cover pressure switch, flame rod	•Confirm electrical and gas safe conditions before proceeding with repairs
•Furnace does not operate, nine Red flashes on control board	•None	•None	•Nine repeating flashes	•Improper grounding or reverse polarity	•115 volt hot & neutral supply to furnace reversed, hot wire (door switch & L1 on control board) must read 115 volts to ground & neutral. Neutral wire should measure 0 volts to ground	•Confirm electrically safe condition before proceeding with repairs
•Furnace does not operate, ten Red flashes on control board	•None	•None	•Ten repeating flashes	•Gas valve current detected with no call for heat	•Verify gas valve is not receiving voltage from an electrical short. If valve wiring is correct replace control board	•Confirm electrical and gas safe conditions before proceeding with repairs
•Furnace does not operate, eleven Red flashes on control board, inducer running	•None	•None	•Eleven repeating flashes	•Open limit switch circuit for more than 5 minutes	•Re-set main power and check indoor blower operation	•Confirm electrically safe condition before proceeding with repairs
•Furnace does not operate, twelve Red flashes on control board	•None	•None	•Twelve repeating flashes	•Control board igniter relay not energizing igniter	•Replace control board	•Confirm electrically safe condition before proceeding with repairs
•Furnace does not operate, control board Red LED on solid	•None	•None	•Solid ON	•Control board internal fault	•Replace control board	•Confirm electrically safe condition before proceeding with repairs
•Furnace does not operate, control board Red LED rapid flash	•None	•None	•Rapid Flash	•Twinning error	•Correct twinning wiring	•Confirm electrically safe condition before proceeding with repairs
•Furnace does not operate, control board Red LED with three double flashes	•None	•None	•Three double flashes	•Second stage pressure switch stuck open	•Verify pressure switch function & tubing, verify inducer operating and pulling enough vacuum to engage switch	•Confirm electrically safe condition before proceeding with repairs

WIRING DIAGRAM

WARNING

HIGH VOLTAGE!
Disconnect ALL power before servicing or installing this unit. Multiple power sources may be present. Failure to do so may cause property damage, personal injury or death.

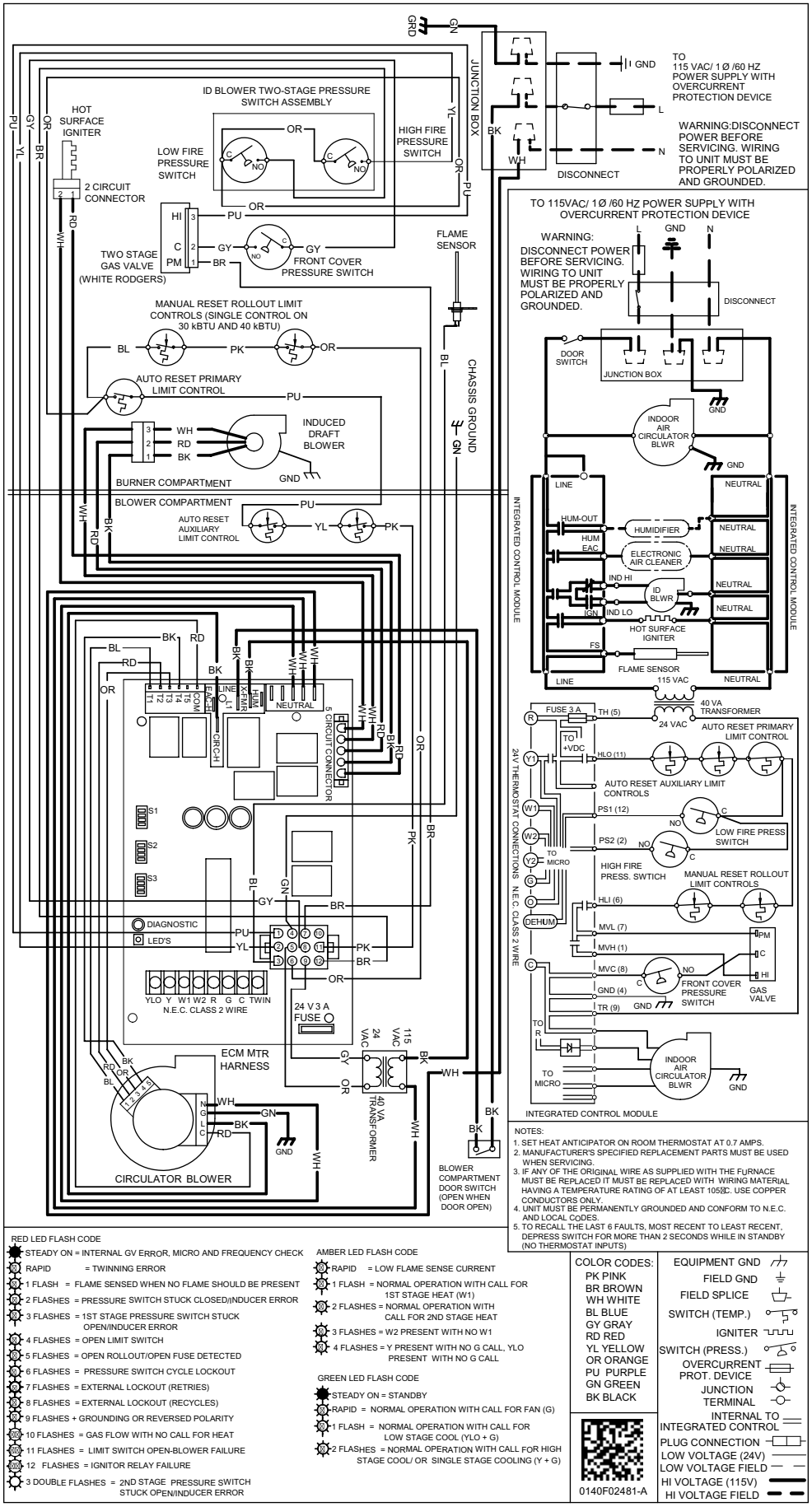

Wiring is subject to change. Always refer to the wiring diagram on the unit for the most up-to-date wiring.

Special Instructions for Products Installed in the State of Massachusetts

For all side wall horizontally vented gas fueled equipment installed in every dwelling, building or structure used in whole or in part for residential purposes, including those owned or operated by the Commonwealth and where the side wall exhaust vent termination is less than seven (7) feet above finished grade in the area of the venting, including but not limited to decks and porches, the following requirements shall be satisfied:

1. INSTALLATION OF CARBON MONOXIDE DETECTORS. At the time of installation of the side wall horizontal vented gas fueled equipment, the installing plumber or gasfitter shall observe that a hard wired carbon monoxide detector with an alarm and battery back-up is installed on the floor level where the gas equipment is to be installed. In addition, the installing plumber or gasfitter shall observe that a battery operated or hard wired carbon monoxide detector with an alarm is installed on each additional level of the dwelling, building or structure served by the side wall horizontal vented gas fueled equipment. It shall be the responsibility of the property owner to secure the services of qualified licensed professionals for the installation of hard wired carbon monoxide detectors
   a. In the event that the side wall horizontally vented gas fueled equipment is installed in a crawl space or an attic, the hard wired carbon monoxide detector with alarm and battery back-up may be installed on the next adjacent floor level.
   b. In the event that the requirements of this subdivision can not be met at the time of completion of installation, the owner shall have a period of thirty (30) days to comply with the above requirements; provided, however, that during said thirty (30) day period, a battery operated carbon monoxide detector with an alarm shall be installed.
2. APPROVED CARBON MONOXIDE DETECTORS. Each carbon monoxide detector as required in accordance with the above provisions shall comply with NFPA 720 and be ANSI/UL 2034 listed and IAS certified.
3. SIGNAGE. A metal or plastic identification plate shall be permanently mounted to the exterior of the building at a minimum height of eight (8) feet above grade directly in line with the exhaust vent terminal for the horizontally vented gas fueled heating appliance or equipment. The sign shall read, in print size no less than one-half (½) inch in size, **"GAS VENT DIRECTLY BELOW. KEEP CLEAR OF ALL OBSTRUCTIONS".**
4. INSPECTION. The state or local gas inspector of the side wall horizontally vented gas fueled equipment shall not approve the installation unless, upon inspection, the inspector observes carbon monoxide detectors and signage installed in accordance with the provisions of 248 CMR 5.08(2)(a)1 through 4.

EXEMPTIONS

The following equipment is exempt from 248 CMR 5.08(2)(a)1 through 4:

1. The equipment listed in Chapter 10 entitled "Equipment Not Required To Be Vented" in the most current edition of NFPA 54 as adopted by the Board; and
2. Product Approved side wall horizontally vented gas fueled equipment installed in a room or structure separate from the dwelling, building or structure used in whole or in part for residential purposes.

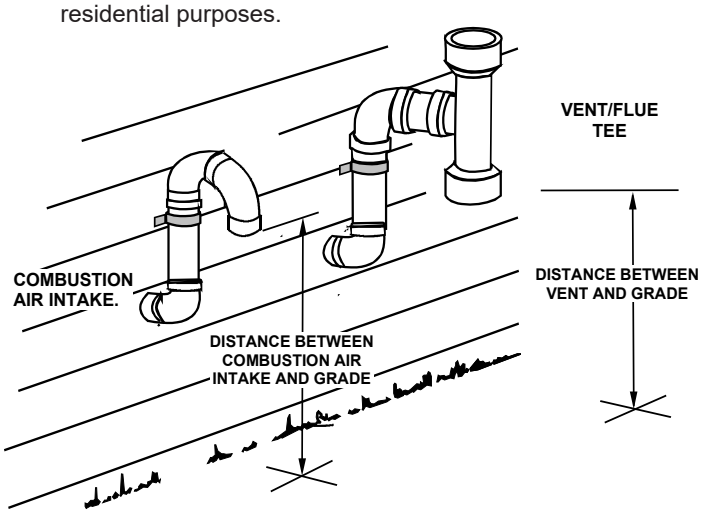

   c. MANUFACTURER REQUIREMENTS - GAS EQUIPMENT VENTING SYSTEM PROVIDED. When the manufacturer of Product Approved side wall horizontally vented gas equipment provides a venting system design or venting system components with the equipment, the instructions provided by the manufacturer for installation of the equipment and the venting system shall include:
3. Detailed instructions for the installation of the venting system design or the venting system components; and
4. A complete parts list for the venting system design or venting system.
   d. MANUFACTURER REQUIREMENTS - GAS EQUIPMENT VENTING SYSTEM NOT PROVIDED. When the manufacturer of a Product Approved side wall horizontally vented gas fueled equipment does not provide the parts for venting the flue gases, but identifies "special venting systems", the following requirements shall be satisfied by the manufacturer:
5. The referenced "special venting system" instructions shall be included with the appliance or equipment installation instructions; and
6. The "special venting systems" shall be Product Approved by the Board, and the instructions for that system shall include a parts list and detailed installation instructions.
   e. A copy of all installation instructions for all Product Approved side wall horizontally vented gas fueled equipment, all venting instructions, all parts lists for venting instructions, and/or all venting design instructions shall remain with the appliance or equipment at the completion of the installation.

START-UP CHECKLIST

Furnace				
	Model Number	_____		
	Serial Number	_____		
ELECTRICAL				
Line Voltage (Measure **L1 to N** and **N to Ground** Voltage)	L - N	_____		
	N - G	_____		
Secondary Voltage (Measure Transformer Output Voltage)	R - C	_____		
Blower Amps		_____		
BLOWER EXTERNAL STATIC PRESSURE				
Return Air Static Pressure		_____	IN. W.C.	
Supply Air Static Pressure		_____	IN. W.C.	
Total External Static Pressure (Ignoring +/- from the reading above, add total here)		_____	IN. W.C.	
TEMPERATURES				
Return Air Temperature (Dry bulb / Wet bulb)		_____	DB °F	_____ WB °F
Cooling Supply Air Temperature (Dry bulb / Wet bulb)		_____	DB °F	_____ WB °F
Heating Supply Air Temperature		_____	DB °F	
Temperature Rise		_____	DB °F	
Delta T (Difference between Supply and Return Temperatures)		_____	DB °F	
GAS PRESSURES				
Gas Inlet Pressure		_____	IN. W.C.	
Gas Manifold Pressure (Low Fire)		_____	IN. W.C.	
Gas Manifold Pressure (High Fire)		_____	IN. W.C.	
Gas Type (NG) = Natural Gas / (LP) = Liquid Propane		_____		
Additional Checks				
Check wire routings for any rubbing		_____		
Check for kinked pressure switch tubing.		_____		
Check flue elbow for alignment and clamp tightness.		_____		
Check screw tightness on blower wheel.		_____		
Check factory wiring and wire connections.		_____		
Check product for proper clearances as noted by installtion instructions		_____		
°F to °C formula: (°F - 32) divided by 1.8 = °C	**°C to °F formula: (°C multiplied by 1.8) + 32 = °F**			

THIS PAGE IS LEFT INTENTIONALLY BLANK.

CUSTOMER FEEDBACK

We are very interested in all product comments.
Please fill out the feedback form on one of the following links:
Goodman® Brand Products: (http://www.goodmanmfg.com/about/contact-us).
Amana® Brand Products: (http://www.amana-hac.com/about-us/contact-us).
You can also scan the QR code on the right for the product brand you purchased to be directed to the feedback page.

GOODMAN® BRAND

AMANA® BRAND

PRODUCT REGISTRATION

Thank you for your recent purchase. Though not required to get the protection of the standard warranty, registering your product is a relatively short process, and entitles you to additional warranty protection, except that failure by California and Quebec residents to register their product does not diminish their warranty rights.

For Product Registration, please register as follows:
Goodman® Brand products: (https://www.goodmanmfg.com/product-registration).
Amana® Brand products: (http://www.amana-hac.com/product-registration).
You can also scan the QR code on the right for the product brand you purchased to be directed to the Product Registration page.

GOODMAN® BRAND

AMANA® BRAND

19001 Kermier Rd. Waller, Tx 77484
www.goodmanmfg.com • www.amana-hac.com
© 2014 - 2022 Goodman Manufacturing Company, L.P.
Amana is a registered trademark of Maytag Corporation or its related companies and is used under license.
All rights reserved.