McDaniel Metals Economizer Installation with Honeywell Controller Instructions 3-12.5 Ton Light Commercial Rooftop Units

© 2025 Daikin Comfort Technologies Manufacturing, Inc.
19001 Kermier Rd., Waller, TX 77484
WWW.DAIKINCOMFORT.COM
P/N: IOD-7173A Date: May 2025

ATTENTION INSTALLING PERSONNEL

As a professional installer you have an obligation to know the product better than the customer. This includes all safety precautions and related items.

Prior to actual installation, thoroughly familiarize yourself with this instruction manual. Pay special attention to all safety warnings. Often during installation or repair it is possible to place yourself in a position which is more hazardous than when the unit is in operation.

Remember, it is your responsibility to install the product safely and to know it well enough to be able to instruct a customer in its safe use. Safety is a matter of common sense...a matter of thinking before acting. Most dealers have a list of specific good safety practices... follow them.

The precautions listed in this installation manual are intended as supplemental to existing practices. However, if there is a direct conflict between existing practices and the content of this manual, the precautions listed here take precedence.

This product is designed and manufactured to permit installation in accordance with national codes. It is the installer's responsibility to install this unit in accordance with national codes and prevailing local codes and regulations.

GENERAL INFORMATION

This installation and operating manual covers field installed downflow economizers for Daikin commercial package models. These economizers are available with dry bulb or enthalpy sensors and are offered on 3 - 12.5 ton models. Economizers can be ordered for low leak or ultra low leak applications. Except for DDC models, this economizer kit must be used with a two stage thermostat.

SAFETY CONSIDERATIONS

Installation and servicing of air conditioning equipment can be hazardous due to system pressure and electrical components. Only trained and qualified service personnel should install, repair, or service air conditioning equipment.

All operations should be performed by trained service personnel. When working on air conditioning equipment, observe precautions in the literature, tags and labels attached to the unit or accessory, and other safety precautions that may apply.

Follow all safety codes. Wear safety glasses and work gloves.

WARNING

ONLY PERSONNEL THAT HAVE BEEN TRAINED TO INSTALL, ADJUST, SERVICE, MAINTENANCE OR REPAIR (HEREINAFTER, "SERVICE") THE EQUIPMENT SPECIFIED IN THIS MANUAL SHOULD SERVICE THE EQUIPMENT.

THIS EQUIPMENT IS NOT INTENDED FOR USE BY PERSONS (INCLUDING CHILDREN) WITH REDUCED PHYSICAL, SENSORY OR MENTAL CAPABILITIES, OR LACK OF EXPERIENCE AND KNOWLEDGE, UNLESS THEY HAVE BEEN GIVEN SUPERVISION OR INSTRUCTION CONCERNING USE OF THE APPLIANCE BY A PERSON RESPONSIBLE FOR THEIR SAFETY.

CHILDREN SHOULD BE SUPERVISED TO ENSURE THAT THEY DO NOT PLAY WITH THE EQUIPMENT.

THE MANUFACTURER WILL NOT BE RESPONSIBLE FOR ANY INJURY OR PROPERTY DAMAGE ARISING FROM IMPROPER SUPERVISION, SERVICE OR SERVICE PROCEDURES. IF YOU SERVICE THIS UNIT, YOU ASSUME RESPONSIBILITY FOR ANY INJURY OR PROPERTY DAMAGE WHICH MAY RESULT. IN ADDITION, IN JURISDICTIONS THAT REQUIRE ONE OR MORE LICENSES TO SERVICE THE EQUIPMENT SPECIFIED IN THIS MANUAL, ONLY LICENSED PERSONNEL SHOULD SERVICE THE EQUIPMENT. IMPROPER SUPERVISION, INSTALLATION, ADJUSTMENT, SERVICING, MAINTENANCE OR REPAIR OF THE EQUIPMENT SPECIFIED IN THIS MANUAL, OR ATTEMPTING TO INSTALL, ADJUST, SERVICE OR REPAIR THE EQUIPMENT SPECIFIED IN THIS MANUAL WITHOUT PROPER SUPERVISION OR TRAINING MAY RESULT IN PROUCT DAMAGE, PROPERTY DAMAGE, PERSONAL INJURY OR DEATH.

WARNING

Do not bypass safety devices.

WARNING

High Voltage!
Disconnect all power before servicing or installing this unit. Lockout-tagout procedure should be followed. Multiple power sources may be present. Failure to do so may cause property damage, personal injury or death.

ECONOMIZER GENERAL INFORMATION

Economizers are used to let free-cooling into the building when the outdoor air is cool enough and therefore reducing the need to turn on your compressors for mechanical cooling. This is accomplished by the controller sending a command to the economizer to open the damper when the outside air is suitable to be used for free cooling. This offers an energy savings to the building owner. In the event that free-cooling alone cannot satisfy the cooling demand in the space, the controller will activate the 1st stage of mechanical cooling and both free-cooling and mechanical cooling will be used together.

If the outside air dampers are open and the air becomes too warm (or humid with enthalpy control) the dampers will be commanded to modulate to the minimum position (ventilation) set point. When doing so the compressors will provide mechanical cooling to the building. When the unit is in heating mode the economizer will be at minimum position.

Economizers are also able to open to a minimum position and offer fresh air (ventilation air) into the building to meet code requirements. The controller has the ability to set 2 separate minimum position settings for 2 speed units.

Economizers are provided with dampers, an actuator to control the damper movement, an outside air sensor (if required), a mixed air sensor (if required), a factory mounted controller (if required), all necessary economizer wiring, barometric relief dampers, and an economizer hood.

Part #	Sensor	Tonnage
0270L02633MC	Dry Bulb	3-6
0270L02634MC	Enthalpy	3-6
0270L02630MC	Dry Bulb	7.5-12.5
0270L02631MC	Enthalpy	7.5-12.5
0270L02635MC	DDC	3-6
0270L02632MC	DDC	7.5-12.5

Table 1 - Downflow Economizer Kit Part Numbers

Part #	Sensor	Tonnage
0270L02710MC	Dry Bulb	3-6
0270L02712MC	Enthalpy	3-6
0270L02714MC	Dry Bulb	7.5-12.5
0270L02713MC	Enthalpy	7.5-12.5
0270L02711MC	DDC	3-6
0270L02715MC	DDC	7.5-12.5

Table 2 - Horizontal Economizer Kit Part Numbers

LOCATION

The location for installation of downflow economizers is to be in the return air section. This installation will be common for all Commercial Rooftop Units.

DOWNFLOW ECONOMIZER INSTALLATION

1. Open carton and inspect contents for damaged or missing parts. Service Tech. Line: 281-987-8400 ext. 116
2. Take Filter Access Panel off of unit. Keep for installation back on to unit when economizer installation is complete. See Figure 1.

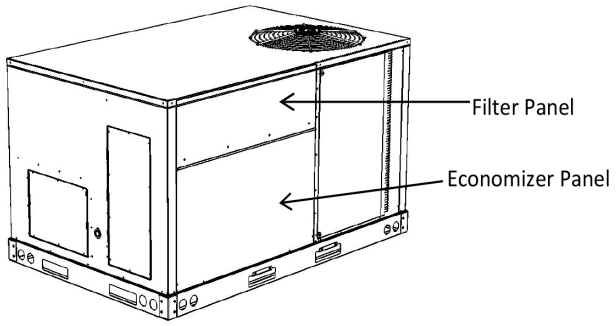

Figure 1 - Remove Panels

3. Remove lower panel from return air section of unit. See Figure 1. This panel can be discarded. Keep removed screws for use in later step.
4. Place economizer in return air section of the unit over the downflow duct opening.

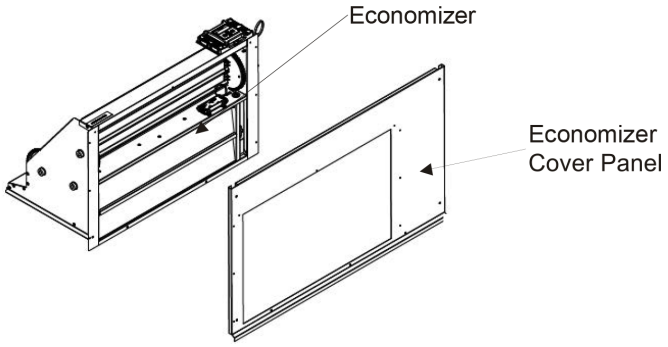

Figure 2 - Economizer and Cover Panel

5. Install the economizer cover panel using the screws removed from the lower panel in Step 3. The holes in the economizer should line up with the holes in the cover panel.

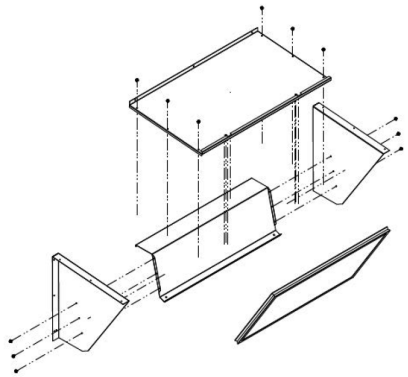

Figure 3 - Economizer Hood Assembly

6. Assemble the hood per the exploded view in Figure 3 using the screws provided. Insert the bottom of the aluminum mesh filter so it will rest on the hood divider, then snap the top of the filter into the clips at the top.

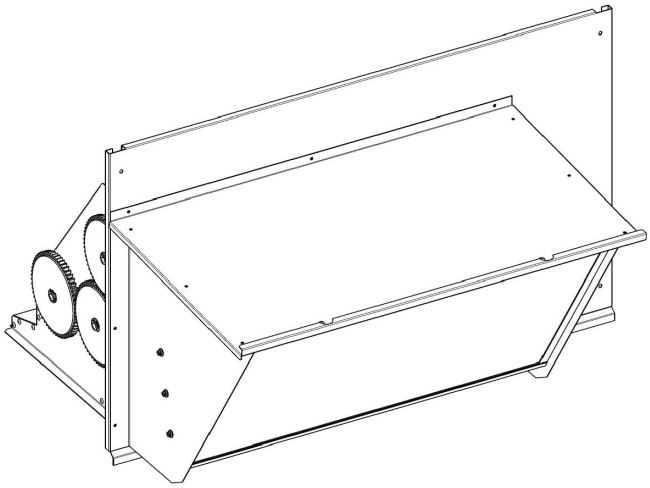

Figure 4 - Finished Hood

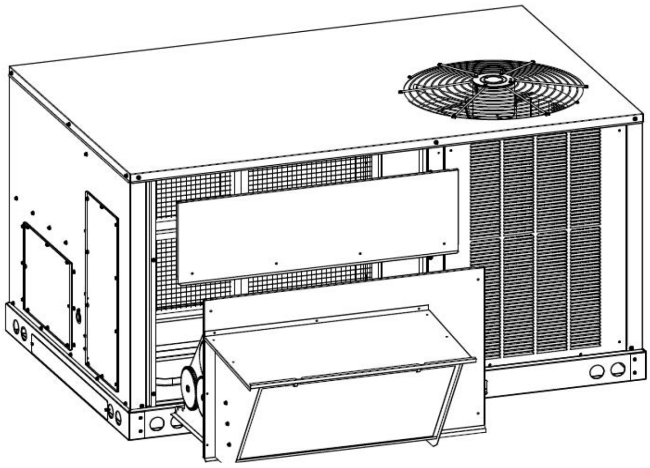

Figure 5 - Install Hood Filter

7. Mount assembled hood onto cover panel and economizer using remaining screws. Screws go through cover panel and engage economizer.

HORIZONTAL ECONOMIZER INSTALLATION

The 7.5 - 12.5 ton models have additional components mounted onto the horizontal return air panel and in the return air duct.

To install the 3 - 6 ton horizontal economizer, perform the following procedure:

The location for installation of horizontal economizers is in the return air section.

1. Open carton and inspect contents for damaged or missing parts.
2. Take Filter Access Panel off of unit. This panel can be discarded. (see Figure 6).

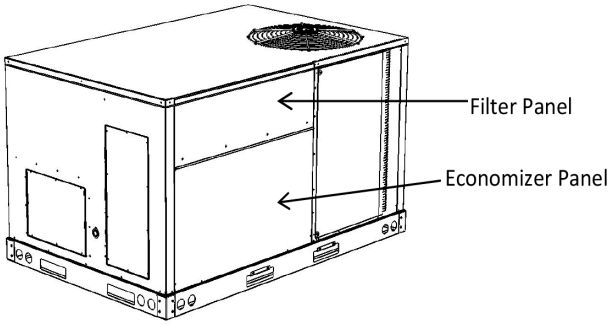

Figure 6 - Remove Panels

3. Remove economizer panel from return air section of unit (see Figure 6). This panel can be discarded. Keep removed screws for use in later step.
4. Remove the horizontal return air opening cover and secure it over the downflow return opening per unit installation instructions. (See horizontal duct clips).
5. Place economizer in return air section of unit aligned with the horizontal duct opening (see Figure 7).
6. Install the economizer cover panel using the screws removed in step 3. The holes in the economizer should line up with the holes in the cover panel (see Figure 7).

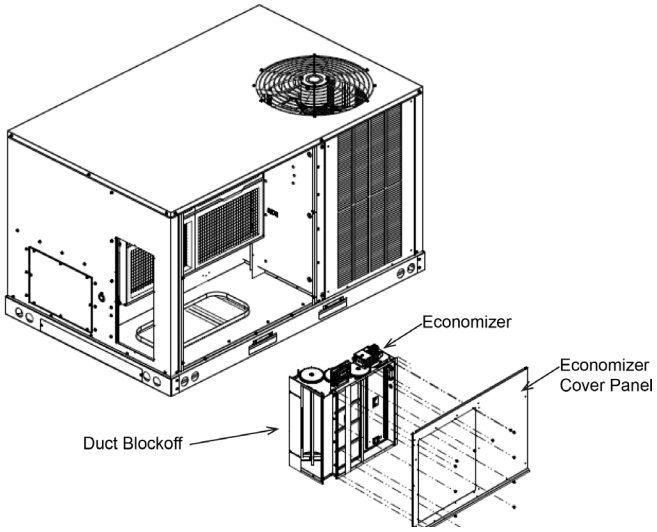

Figure 7 – Side Economizer Into Unit

7. Apply gasket from the hardware bag to the mating flanges of pre-assembled economizer hood. Then fasten the hood to the economizer cover panel using provided screws. (See Figure 8)

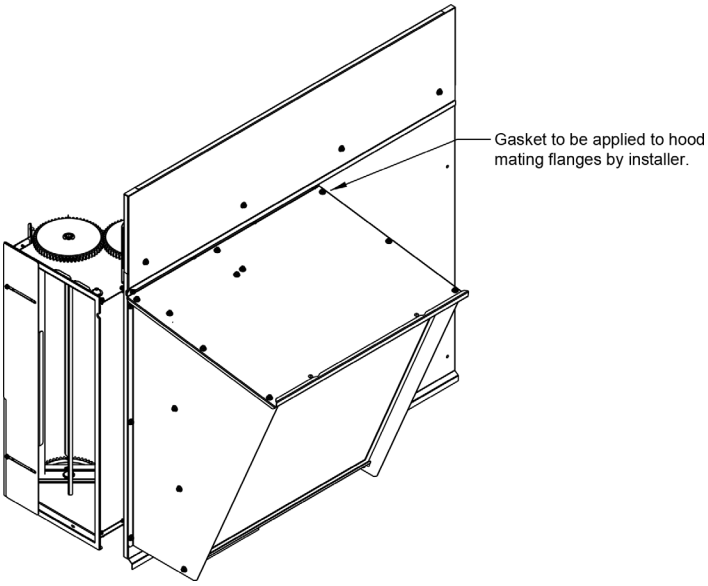

Figure 8 - Fully Assembled Hood

8. With economizer fully installed, loosen the duct blockoff and slide it toward the filter rack to minimize air by-pass (see Figure 9).

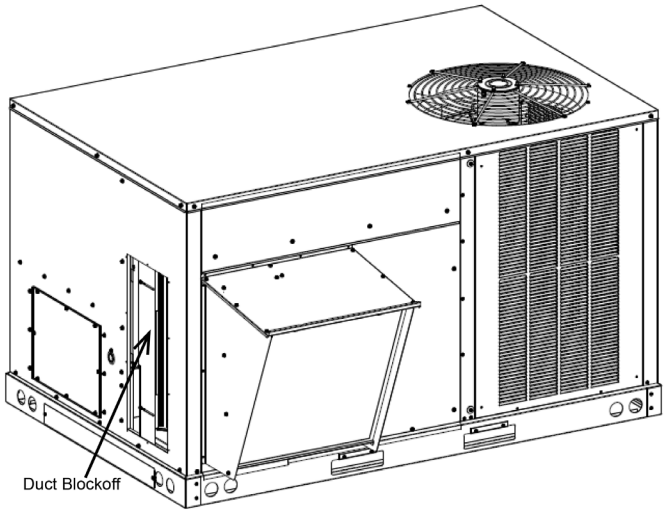

Figure 9 - Fully Assembled Economizer

9. Leave the kit supplied filter access panel above the hood off at this point to access the controller and actuator. Controller and actuator are mounted directly to economizer (see Figure 10).

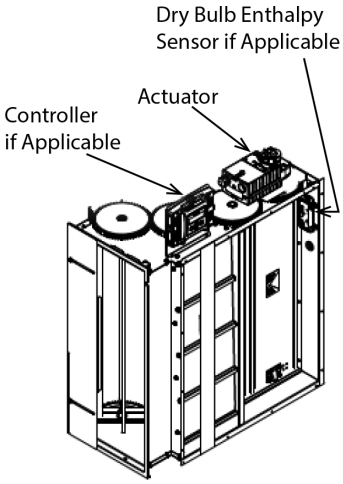

Figure 10 - Actuator and Controller Location

To install the 7.5 - 12.5 ton horizontal economizer, perform the following procedure:

1. Open carton and inspect contents for damaged or missing parts.
2. Take filter access panel off of unit. Keep for installation back on to unit when economizer installation is complete (see Figure 11).

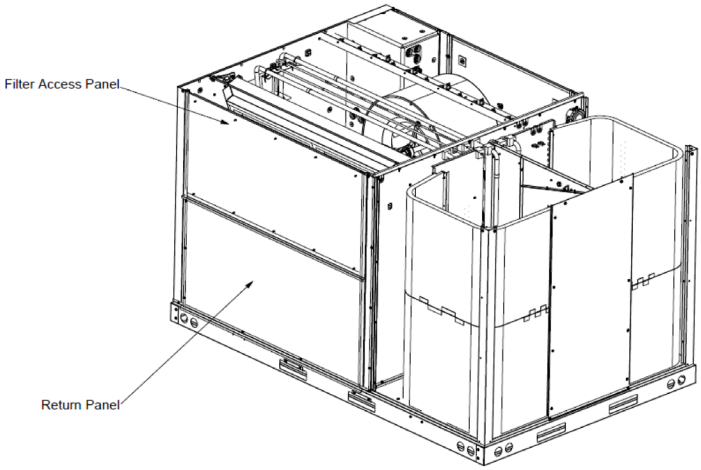

Figure 11 - Remove Panels

3. Remove return panel from return air section of unit (see Figure 11). This panel can be discarded. Keep removed screws for use in later step.
4. Remove the horizontal return air opening cover and secure it over the downflow return opening per unit installation instructions (See horizontal duct clips). Keep removed screws for use in later step.
5. Mount the return air damper assembly and the outside air damper assembly to the unit using screws removed in steps 3 and 4 (see Figure 12).

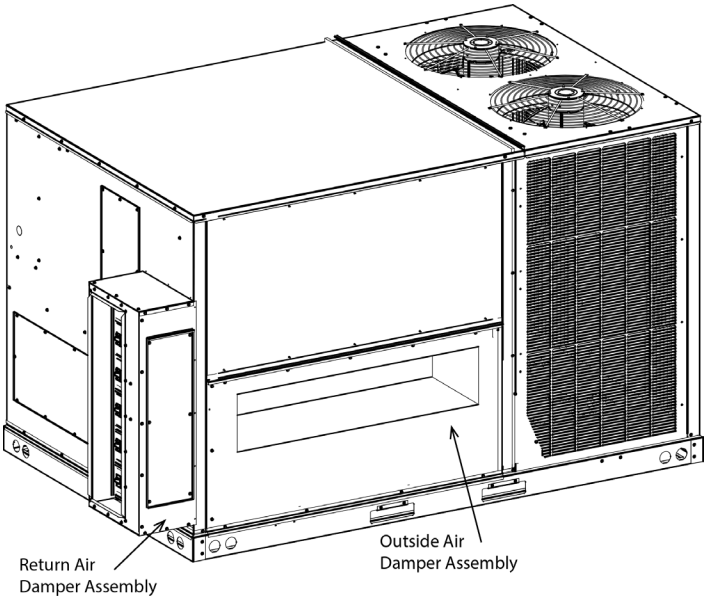

Figure 12 - Medium Damper Assemblies

6. Fasten the fully assembled outside air damper hood to outside air damper assembly using provided screws (see Figure 13).

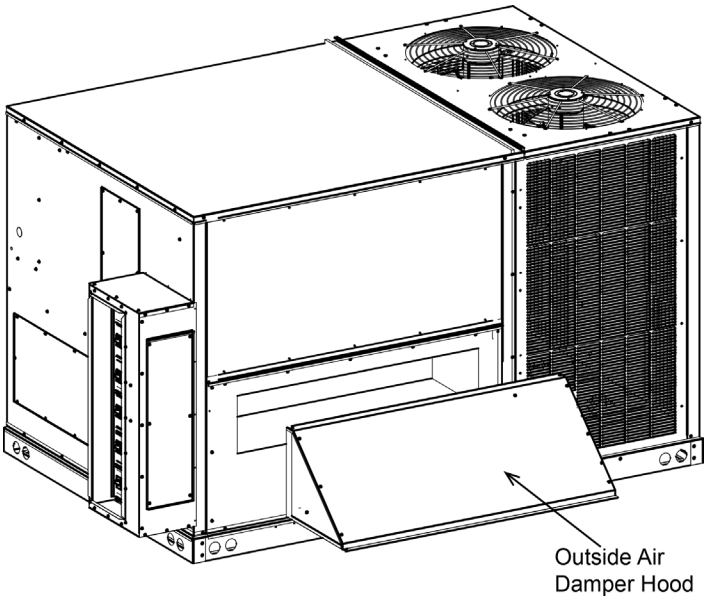

Figure 13 - Medium Damper Hood

7. Install the return duct onto the return air damper assembly.
8. Cut a 19” x 19” hole into the return side of the return duct at least 4” from the return air damper assembly.
9. Fasten the fully assembled barometric relief hood over the hole in the return duct using provided screws (see Figure 14).
10. Weatherproof the seam where the return air damper assembly meets the unit and where the return air duct meets the return air damper with silicone or other approved sealant.

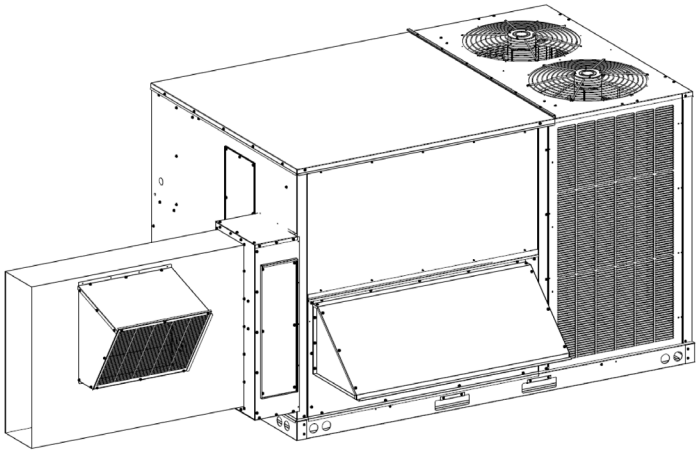

Figure 14 - Barometric Relief Hood

11. Leave the filter access panel above the outside air damper hood off at this point to access the controller and actuator. Controller and actuator are mounted directly to outside air damper assembly (see Figure 15).

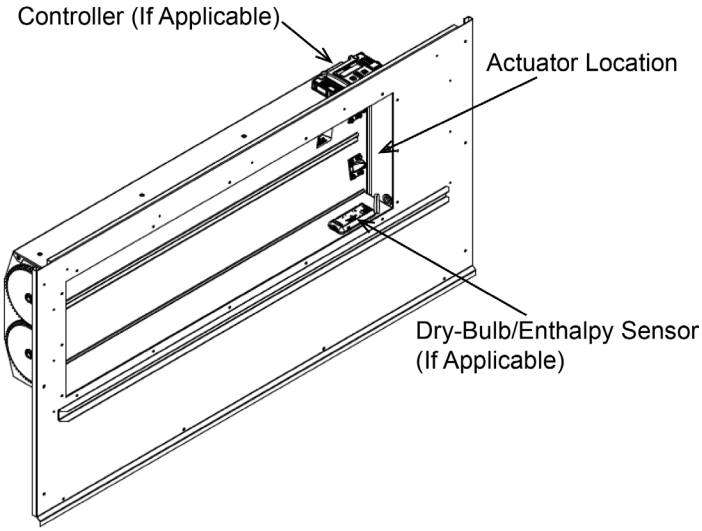

Figure 15 - Controller and Actuator

ECONOMIZER WIRING INSTRUCTIONS

1. Remove the jumper plug from the factory installed economizer wire harness. The jumper plug is located on the partition panel in the return air compartment (see Figure 16).
2. Place Jumper Plug in basepan, do not throw away.

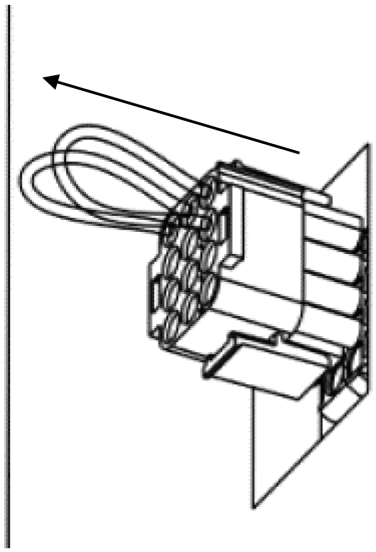

Figure 16 - Remove Jumper Plug

3. Plug in the wire harness provided with the economizer kit (see Figure 17).
   Note: Economizer kits with DDC controls do not include the mixed air temperature sensor. If your unit has the DDC controls option installed, confirm that the supply air temperature sensor has been installed and is functioning as specified in the *iLINQ* User Manual and skip to step 6.

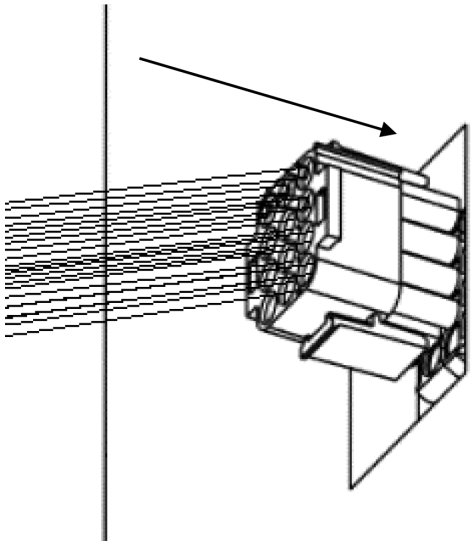

Figure 17 - Attach Economizer Harness

4. Remove the indoor fan compartment cover and locate the factory installed mixed air temperature harness. This harness consists of two black wires and a two pin connector. If your unit did not come with a factory installed economizer your unit will not have this harness. If your unit does not have this harness, skip to step 4. Economizer kits with DDC controls do not include the mixed air temperature sensor. If your unit has the DDC controls option installed, confirm that the supply air temperature sensor has been installed and is functioning as specified in the *iLINQ* User Manual and skip to step 6. Once the harness is located, install the mixed air temperature sensor provided with the kit on the side of the blower housing. Connect the mixed air temperature sensor to the factory harness using the adapter harness provided with the economizer kit (see Figure 18 or Figure 22). Reinstall the indoor fan compartment cover. Skip to step 5.

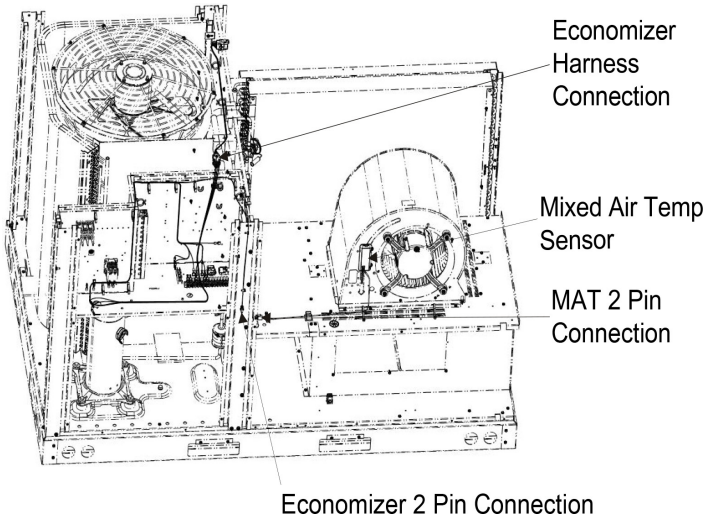

Figure 18
Indoor Fan Section/Mixed Air Sensor for 3-6 Ton

5. Some gas units may not have a factory installed mixed air temperature harness in the blower compartment. In this case, install the mixed air temperature sensor in the return air compartment (see Figure 19 for mounting location). Use the 2 cutting screws provided with the kit to mount the sensor. Disconnect the existing mixed air temperature sensor wire harness from the Climatex ECO control module. Locate the mixed air temperature wire harness packaged with the sensor and connect one end to the mixed air temperature sensor and the other end to the Climatex ECO module (see Figure 20). Secure the disconnected mixed air temperature harness so that it does not interfere with any moving parts.

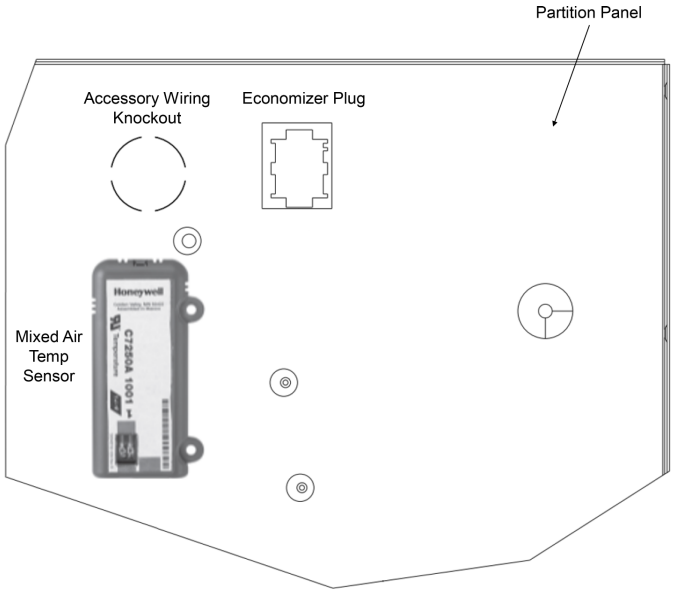

Figure 19
(for non-factory installed economizer units)

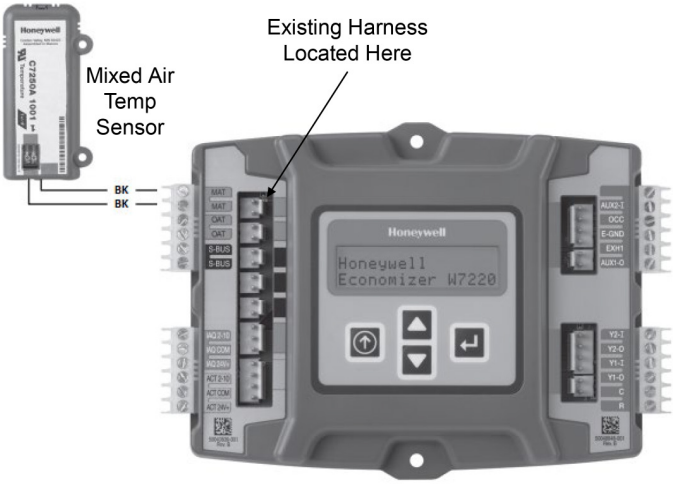

Figure 20

6. Program the Climatix ECO controller to the needs of your specific application. See included SIEMENS instructions for details of the Menu structure of the controller.
7. Reinstall the unit's filter access panel above economizer.

NOTE: For 7.5 to 12.5 Ton units, the factory installed economizer wire harness and jumper plug will be hanging from the evaporator coil blockoff (see Figure 21).

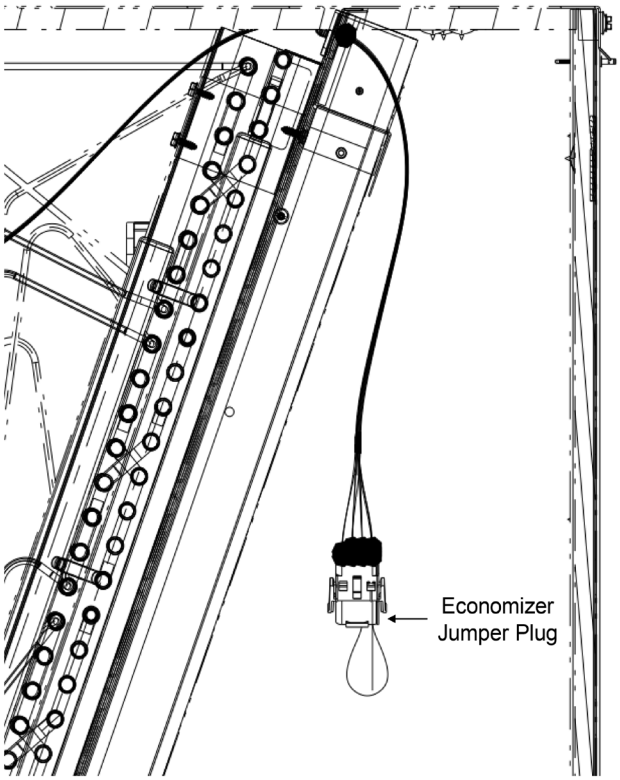

Figure 21

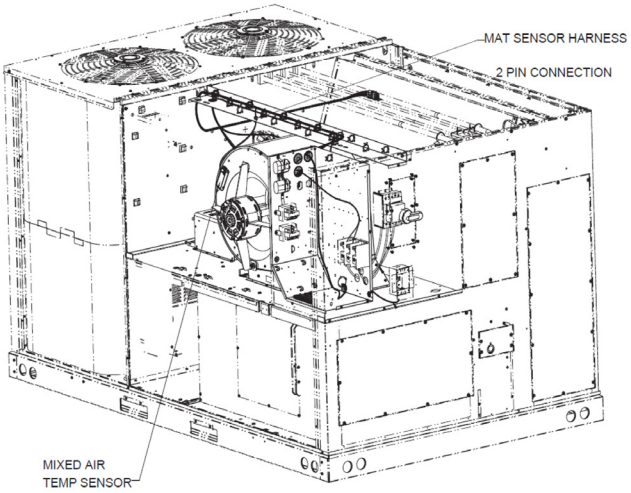

Figure 22 - Indoor Fan Section/Mixed Air Sensor 7.5-12.5 Ton

DOWNFLOW ECONOMIZER STATIC PRESSURE DROP VALUES:

See the tables below for static pressure drop values when the downflow economizer kit is installed.

3-6 Tons		
Cabinet	**CFM**	**Static Pressure Drop**
3 Ton	900	.03"
	1,200	.05"
	1,500	.08"
4 Ton	1,200	.06"
	1,600	.10"
	2,000	.14"
5 Ton	1,500	.08"
	2,000	.14"
	2,500	.22"
6 Ton	1,800	.13"
	2,400	.22"
	3,000	.33"

Table 3

7.5-12.5 Tons		
Cabinet	**CFM**	**Static Pressure Drop**
7.5 Ton	2,250	.04"
	3,000	.07"
	3,750	.11"
8.5 Ton	2,550	.06"
	3,400	.10"
	4,250	.16"
10 Ton	3,000	.08"
	4,000	.13"
	5,000	.22"
12.5 Ton	3,750	.14"
	5,000	.24"
	6,250	.36"

Table 4

HORIZONTAL ECONOMIZER STATIC PRESSURE DROP VALUES:

See the tables below for static pressure drop values when the horizontal economizer kit is installed.

Small Chassis Economizer Static Pressure Loss in. w.c.

3-6 Tons		
Horizontal Economizer Static Pressure Drop		
Cabinet	**CFM**	**Horizontal**
3 Ton	900	.06"
	1,200	.11"
	1,500	.16"
4 Ton	1,200	.11"
	1,600	.19"
	2,000	.29"
5 Ton	1,500	.18"
	2,000	.30"
	2,500	.45"
6 Ton	1,800	.24"
	2,400	.41"
	3,000	.61"

Table 5 - 3-6 Ton Static Pressure Drop

Medium Chassis Economizer Static Pressure Loss in. w.c.

7.5 - 12.5 Tons		
Horizontal Economizer Static Pressure Drop		
Cabinet	**CFM**	**Horizontal**
7.5 Ton	2,250	.05"
	3,000	.07"
	3,750	.13"
8.5 Ton	2,550	.07"
	3,400	.13"
	4,250	.18"
10 Ton	3,000	.07"
	4,000	.12"
	5,000	.19"
12.5 Ton	3,750	.09"
	5,000	.15"
	6,250	.24"

Table 6 - 7.5 - 12.5 Static Pressure Drop

JADE ECONOMIZER WIRING DIAGRAM

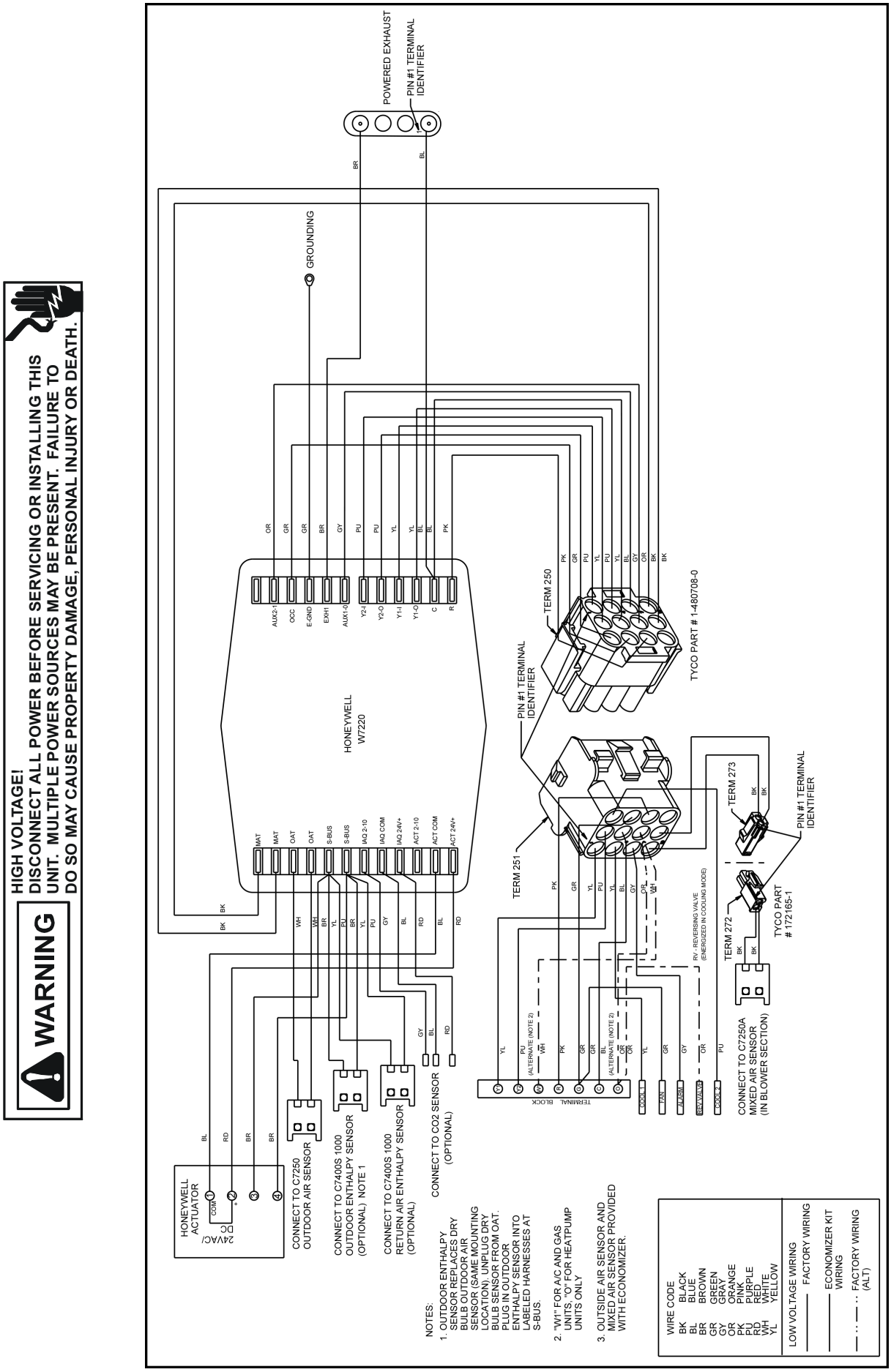

Wiring is subject to change. Always refer to the unit wiring diagram and accessory wiring diagram booklet for the most up-to-date wiring.

DDC Economizer Wiring Diagram

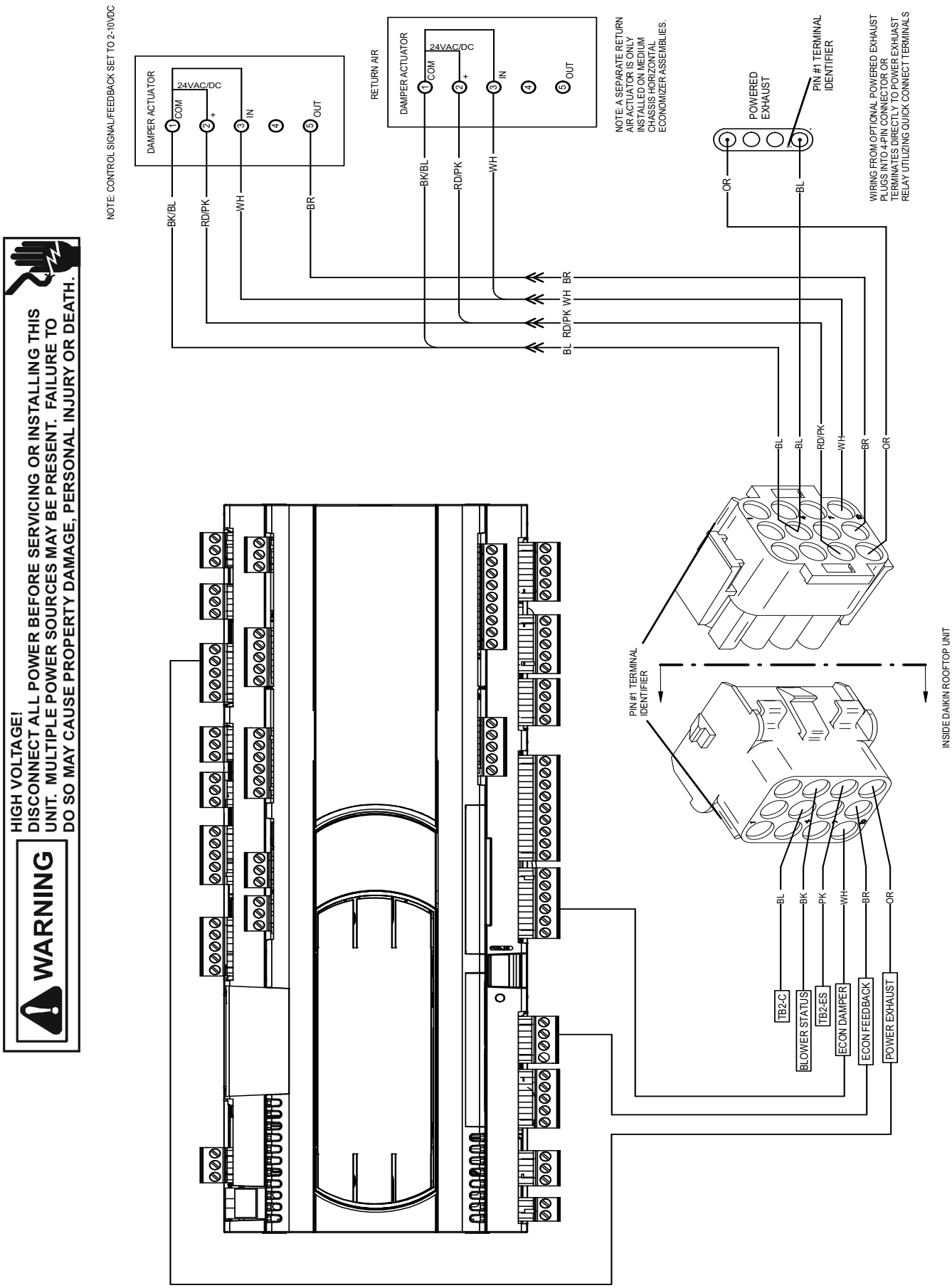

Wiring is subject to change. Always refer to the unit wiring diagram and accessory wiring diagram booklet for the most up-to-date wiring.

THIS PAGE IS INTENTIONALLY LEFT BLANK

CUSTOMER FEEDBACK
Daikin is very interested in all product comments.
Please fill out the feedback form on the following link:
https://daikincomfort.com/contact-us
You can also scan the QR code on the right to be directed to the feedback page.

NOTE: SPECIFICATIONS AND PERFORMANCE DATA LISTED HEREIN ARE SUBJECT TO CHANGE WITHOUT NOTICE.

© 2025 Daikin Comfort Technologies Manufacturing, Inc.
19001 Kermier Rd., Waller, TX 77484
www.daikincomfort.com