DVH Series Light Commercial Packaged Heating and Cooling Unit 7.5T to 10T Installation Instructions

COMMERCIAL GRADE

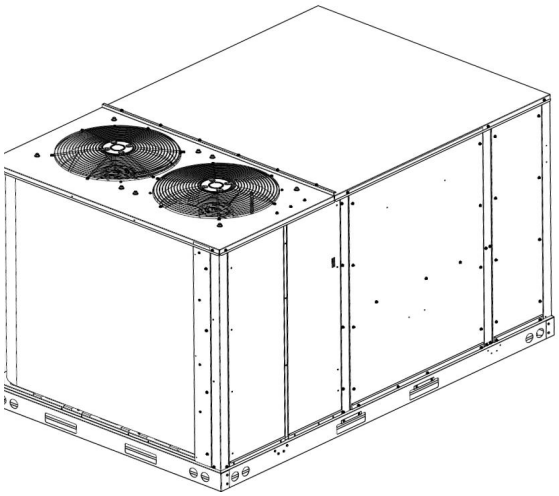

AHRI CERTIFIED® www.ahridirectory.org Unitary Large AC AHRI Standard 340/360 Certification applies only when the complete system is listed with AHRI.

AHRI CERTIFIED® www.ahridirectory.org Unitary Large HP AHRI Standard 340/360 Certification applies only when the complete system is listed with AHRI.

c ETL US Intertek

WARNING

ONLY PERSONNEL THAT HAVE BEEN TRAINED TO INSTALL, ADJUST, SERVICE, MAINTENANCE OR REPAIR (HEREINAFTER, "SERVICE") THE EQUIPMENT SPECIFIED IN THIS MANUAL SHOULD SERVICE THE EQUIPMENT.

THIS EQUIPMENT IS NOT INTENDED FOR USE BY PERSONS (INCLUDING CHILDREN) WITH REDUCED PHYSICAL, SENSORY OR MENTAL CAPABILITIES, OR LACK OF EXPERIENCE AND KNOWLEDGE, UNLESS THEY HAVE BEEN GIVEN SUPERVISION OR INSTRUCTION CONCERNING USE OF THE APPLIANCE BY A PERSON RESPONSIBLE FOR THEIR SAFETY.

CHILDREN SHOULD BE SUPERVISED TO ENSURE THAT THEY DO NOT PLAY WITH THE EQUIPMENT.

THE MANUFACTURER WILL NOT BE RESPONSIBLE FOR ANY INJURY OR PROPERTY DAMAGE ARISING FROM IMPROPER SUPERVISION, SERVICE OR SERVICE PROCEDURES. IF YOU SERVICE THIS UNIT, YOU ASSUME RESPONSIBILITY FOR ANY INJURY OR PROPERTY DAMAGE WHICH MAY RESULT. IN ADDITION, IN JURISDICTIONS THAT REQUIRE ONE OR MORE LICENSES TO SERVICE THE EQUIPMENT SPECIFIED IN THIS MANUAL, ONLY LICENSED PERSONNEL SHOULD SERVICE THE EQUIPMENT. IMPROPER SUPERVISION, INSTALLATION, ADJUSTMENT, SERVICING, MAINTENANCE OR REPAIR OF THE EQUIPMENT SPECIFIED IN THIS MANUAL, OR ATTEMPTING TO INSTALL, ADJUST, SERVICE OR REPAIR THE EQUIPMENT SPECIFIED IN THIS MANUAL WITHOUT PROPER SUPERVISION OR TRAINING MAY RESULT IN PRODUCT DAMAGE, PROPERTY DAMAGE, PERSONAL INJURY OR DEATH.

QUEBEC DISCLOSURE REGARDING AVAILABILITY OF REPLACEMENT PARTS, REPAIR SERVICES AND INFORMATION FOR MAINTENANCE AND REPAIR: Daikin Comfort Technologies Manufacturing, Inc. (Daikin) does not guarantee the availability of (1) replacement parts; (2) repair services; and (3) information necessary to maintain or repair products, within the meaning of section 39.1 of the Consumer Protection Act, CQLR, c P-40.1 and section 79.18 of the Regulation respecting the application of the Consumer Protection Act, CQLR, c P-40.1, r. 3.

AVIS POUR LE QUÉBEC CONCERNANT LA DISPONIBILITÉ DES PIÈCES DE RECHANGE, DES SERVICES DE RÉPARATION ET DES RENSEIGNEMENTS POUR L'ENTRETIEN ET LA RÉPARATION : Daikin Comfort Technologies Manufacturing, Inc. (Daikin) ne garantit pas la disponibilité (1) des pièces de rechange, (2) des services de réparation et (3) des renseignements pour l'entretien et la réparation, au sens de l'article 39.1 de la Loi sur la protection du consommateur, RLRQ c P-40.1 et de l'article 79.18 du Règlement d'application de la Loi sur la protection du consommateur, RLRQ c P-40.1, r 3.

WARNING

DO NOT BYPASS SAFETY DEVICES

WARNING

DO NOT CHANGE THE SETTING OF THE PROTECTION DEVICES. IF THE PRESSURE SWITCH, THERMAL SWITCH, OR OTHER PROTECTION DEVICE IS SHORTED AND OPERATED FORCIBLY, OR PARTS OTHER THAN THOSE SPECIFIED BY DAIKIN ARE USED, FIRE OR EXPLOSION MAY OCCUR.

Our continuing commitment to quality products may mean a change in specifications without notice.

©2026 Daikin Comfort Technologies Manufacturing, Inc.
19001 Kermier Rd., Waller, TX 77484
www.daikincomfort.com

IOD-4066
3/2026

INDEX

Safety Instructions 2
Replacement Parts 2
General Information 3
Clearances 7
Roof Curb Post-Installation Checks 7
Roof Top Duct Connections 7
Rigging Details 8
Weights And Center Of Gravity 9
Electrical Wiring 9
Circulating Air And Filters 12
Condensate Drain Connection 12
Startup, Adjustments, And Checks 13
Commissioning 14
Air Flow Adjustments 30
Operational Verification 31
Error Codes List 33
Unit Operation 36
Maintenance 38
Troubleshooting 40
Appendix A Blower Performance Data 43
Appendix B Electrical Data 50
Appendix C Unit Dimensions 53
Appendix D Min-Max Airflow 54
Appendix E Input / Output Specification 55
Wiring Diagram 56
Start-Up Checklist 58

SAFETY INSTRUCTIONS

RECOGNIZE THIS SYMBOL AS A SAFETY PRECAUTION.

These installation instructions cover the outdoor installation of single package inverter heating and cooling units. See the Light Commercial Accessory Guide applicable to your model for information regarding accessories.

***NOTE: Please contact your distributor or our website for the applicable Specification Sheet referred to in this manual.**

NOTE: this unit should be installed in a manner so that it is not accessible to the public.

REPLACEMENT PARTS

Ordering Parts

When reporting shortages or damages report this to https://www.goodmanmfg.com/logistics-feedback. When ordering repair parts give the complete unit model and serial numbers as stamped on the unit's nameplate.

Replacement parts for this appliance are available through your contractor or local distributor. Your nearest distributor can be located online at www.daikincomfort.com or by contacting:

EQUIPMENT SUPPORT
Daikin Comfort Technologies Manufacturing, Inc.
19001 Kermier Road
Waller, Texas 77484
855-770-5678

To The Installer

Before installing this unit, please read this manual to familiarize yourself on the specific items which must be adhered to, including maximum external static pressure to unit, air temperature rise, minimum or maximum CFM and motor speed settings.

Keep this literature in a safe place for future reference.

WARNING

To prevent the risk of property damage, personal injury, or death, do not store combustible materials or use gasoline or other flammable liquids or vapors in the vicinity of this appliance.

CAUTION

Sheet metal parts, screws, clips and similar items inherently have sharp edges, and it is necessary that the installer and service personnel exercise caution.

WARNING

Do not connect to or use any device that is not listed in the applicable product specifications as acceptable for use with this unit. Serious property damage, personal injury, reduced unit performance and/or hazardous conditions may result from the use of such non-approved devices.

WARNING

This unit must not be used as a "construction heater" during the finishing phases of construction on a new structure. This type of use may result in premature failure of the unit due to extremely low return air temperature and exposure to corrosive or very dirty atmospheres.

WARNING

DO NOT USE MEANS TO ACCELERATE DEFROSTING PROCESS OR TO CLEAN, OTHER THAN THOSE RECOMMENDED BY THE MANUFACTURER.

THE APPLIANCE SHALL BE STORED IN A ROOM WITHOUT CONTINUOUSLY OPERATING IGNITION SOURCES (FOR EXAMPLE: OPEN FLAMES, AN OPERATING GAS APPLIANCE OR AN OPERATING ELECTRIC HEATER.

DO NOT PIERCE OR BURN.

BE AWARE THAT REFRIGERANTS MAY NOT CONTAIN AN ODOR.

WARNING

ONLY AUXILIARY DEVICES APPROVED BY THE APPLIANCE MANUFACTURER OR DECLARED SUITABLE WITH THE REFRIGERANT SHALL BE INSTALLED IN CONNECTING DUCTWORK.

WARNING

AUXILIARY DEVICES WHICH MAY BE A POTENTIAL IGNITION SOURCE SHALL NOT BE INSTALLED IN THE DUCT WORK. EXAMPLES OF SUCH POTENTIAL IGNITION SOURCES ARE HOT SURFACES WITH A TEMPERATURE EXCEEDING 700°C AND ELECTRIC SWITCHING DEVICES.

WARNING

LEAK DETECTION SYSTEM INSTALLED. UNIT MUST BE POWERED EXCEPT FOR SERVICE.

WARNING

THIS UNIT IS EQUIPPED WITH ELECTRICALLY POWERED SAFETY MEASURES. TO BE EFFECTIVE, THE UNIT MUST BE ELECTRICALLY POWERED AT ALL TIMES AFTER INSTALLATION, OTHER THAN WHEN SERVICING.

WARNING

DO NOT OPERATE THE COMPRESSOR(S) WITHOUT THE TERMINAL PLUG FULLY ENGAGED OR THE TERMINAL COVER PROPERLY INSTALLED.

WARNING

A TRIPPED CIRCUIT BREAKER OR BLOWN FUSE MAY INDICATE THAT AN ELECTRICAL PROBLEM EXISTS. DO NOT RESET A CIRCUIT BREAKER OR REPLACE FUSES WITHOUT FIRST PERFORMING THOROUGH ELECTRICAL TROUBLESHOOTING AND TESTING PROCEDURES.

WARNING

HIGH VOLTAGE!
PRIOR TO SERVICING THE UNIT OR REMOVING THE COMPRESSOR TERMINAL PLUG OR TERMINAL COVER, DISCONNECT ALL ELECTRICAL POWER FROM THE UNIT. MULTIPLE POWER SOURCES MAY BE PRESENT.

WARNING

HIGH VOLTAGE!
DISCONNECT ALL POWER BEFORE SERVICING OR INSTALLING THIS UNIT. MULTIPLE POWER SOURCES MAY BE PRESENT. FAILURE TO DO SO MAY CAUSE PROPERTY DAMAGE, PERSONAL INJURY OR DEATH.

WARNING

HERMETIC COMPRESSOR ELECTRICAL TERMINAL VENTING CAN BE DANGEROUS. IN CERTAIN CIRCUMSTANCES, THE TERMINAL MAY BE EXPELLED, VENTING THE REFRIGERANT VAPOR AND COMPRESSOR OIL CONTAINED WITHIN THE COMPRESSOR HOUSING AND SYSTEM. BE ALERT FOR SOUNDS OF ARCING (SIZZLING, SPUTTERING, OR POPPING) INSIDE THE COMPRESSOR. IMMEDIATELY GET AWAY IF YOU HEAR THESE SOUNDS AND DISCONNECT ELECTRICAL POWER FROM THE UNIT.

GENERAL INFORMATION

WARNING

TO PREVENT PROPERTY DAMAGE, PERSONAL INJURY OR DEATH, DUE TO FIRE, EXPLOSIONS, SMOKE, SOOT, CONDENSATION, ELECTRIC SHOCK OR CARBON MONOXIDE, THIS UNIT MUST BE PROPERLY INSTALLED, REPAIRED, OPERATED, AND MAINTAINED.

This unit is approved for outdoor installation ONLY. Not accessible to the public. Rated performance is achieved after 20 hours of operation. Rated performance is delivered at the specified airflow. See outdoor unit specification sheet for split system models or product specification sheet for packaged and light commercial models. Specification sheets can be found at www.daikincomfort.com for Daikin brand products. Within the website, please select the residential or commercial products menu and then select the submenu for the type of product to be installed, such as air conditioners or heat pumps, to access a list of product pages that each contain links to that model's specification sheet.

Qualification of workers

Personnel must be certified to service, work, and/or repair units with FLAMMABLE REFRIGERANTS. A certificate should document the competence and qualifications achieved through training that included the substance of the following:

- Information about the explosion potential of FLAMMABLE REFRIGERANTS to show that flammables may be dangerous when handled without care.
- Information about POTENTIAL IGNITION SOURCES, especially those that are not obvious, such as lighters, light switches, vacuum cleaners, electric heaters.
- Information about the different safety concepts, including ventilated and unventilated areas.
- Information about refrigerant detectors, including function, operation, and service measures.
- Information about the concept of sealed components and sealed enclosures according to IEC 60079-15:2010.
- Information about the correct working procedures, including commissioning, maintenance, repair, decommissioning, and disposal procedures.

EPA Regulations

Important: The United States Environmental Protection Agency (EPA) has issued various regulations regarding the introduction and disposal of refrigerants in this unit. Failure to follow these regulations may harm the environment and can lead to the imposition of substantial fines. Because regulations may vary due to passage of new laws, we suggest a certified technician perform any work done on this unit. Should you have any questions please contact the local office of the EPA.

National Codes

This product is designed and manufactured to permit installation in accordance with National Codes. It is the installer's responsibility to install the product in accordance with National Codes and/or prevailing local codes and regulations.

The heating and cooling capacities of the unit should be greater than or equal to the design heating and cooling loads of the area to be conditioned. The loads should be calculated by an approved method or in accordance with ASHRAE Guide or Manual J - Load Calculations published by the Air Conditioning Contractors of America.

Obtain from:
American National Standards Institute
www.ansi.org

System design and installation should also, where applicable, follow information presented in accepted industry guides such as the ASHRAE Handbooks. The manufacturer assumes no responsibility for equipment installed in violation of any code or regulation. The mechanical installation of the packaged roof top units consists of making final connections between the unit and building services; supply and return duct connections; and drain connections (if required). The internal systems of the unit are completely factory-installed and tested prior to shipment.

Units are generally installed on a steel roof mounting curb assembly which has been shipped to the job site for installation on the roof structure prior to the arrival of the unit. The model number shown on the unit's identification plate identifies the various components of the unit such as refrigeration tonnage, heating input and voltage.

Carefully inspect the unit for damage including damage to the cabinetry. Any bolts or screws which may have loosened in transit must be re-tightened.
In the event of damage, the receiver should:

1. Make notation on delivery receipt of any visible damage to shipment or container.
2. Notify the carrier promptly and request an inspection.
3. In case of concealed damage, the carrier should be notified as soon as possible-preferably within 5 days.
4. File the claim with the following supporting documents:
   a. Original Bill of Lading, certified copy, or indemnity bond.
   b. Original paid freight bill or indemnity in lieu thereof.
   c. Original invoice or certified copy thereof, showing trade and other discounts or reductions.
   d. Copy of the inspection report issued by the carrier representative at the time damage is reported to the carrier. The carrier is responsible for making prompt inspection of damage and for a thorough investigation of each claim. The distributor or manufacturer will not accept claims from dealers for transportation damage.

NOTE: When inspecting the unit for transportation damage, remove all packaging materials. Recycle or dispose of the packaging material according to local codes.

Terminal Venting

Never operate the unit without the compressor terminal cover secured and properly in place or without the electrical plug fully seated and engaged to the terminal posts. If a terminal is damaged, electrically overloaded, or short circuits to ground, there is a remote possibility that the terminal can be suddenly expelled from the terminal housing thereby venting the refrigerant and compressor oil mixture to atmosphere. This discharge can be ignited from electrical arcing, or other open sources of ignition, and can cause potentially severe or fatal injury. This event is known as Terminal Venting. To reduce the possibility of external ignition, all open flames or other heat sources must be extinguished, and all electrical power must be turned off and made to comply with "lockout-tagout" procedure prior to opening the terminal cover or removing the electrical plug and servicing the system. Proper sealed system evacuation is required during equipment service to maintain adequate internal system cleanliness while eliminating contaminates. Be alert for sounds of arcing (sizzling, sputtering, or popping) inside the compressor. IMMEDIATELY GET AWAY from the unit if you hear these sounds and disconnect electrical power.

Pre-Installation Checks

Carefully read all instructions for the installation prior to installing unit. Ensure each step or procedure is understood and any special considerations are taken into account before starting installation. Assemble all tools, hardware and supplies needed to complete the installation. Some items may need to be purchased locally.

Wiring

Check that wiring will not be subject to wear, corrosion, excessive pressure, vibration, sharp edges or any other adverse environmental effects. The check shall also take into account the effects of aging or continual vibration from sources such as compressors or fans.

Detection of flammable refrigerants

Under no circumstances shall potential sources of ignition be used in the searching for or detection of refrigerant leaks. A halide torch (or any other detector using a naked flame) shall not be used.

The following leak detection methods are deemed acceptable for all refrigerant systems.

Electronic leak detectors may be used to detect refrigerant leaks but, in the case of FLAMMABLE REFRIGERANTS, the sensitivity may not be adequate, or may need re-calibration. (Detection equipment shall be calibrated in a refrigerant-free area.)

Ensure that the detector is not a potential source of ignition and is suitable for the refrigerant used. Leak detection equipment shall be set at a percentage of the LFL of the refrigerant and shall be calibrated to the refrigerant employed, and the appropriate percentage of gas (25 % maximum) is confirmed.

Leak detection fluids are also suitable for use with most refrigerants but the use of detergents containing chlorine shall be avoided as the chlorine may react with the refrigerant and corrode the copper pipe-work.

If a leak is suspected, all naked flames shall be removed/extinguished.

If a leakage of refrigerant is found which requires brazing, all of the refrigerant shall be recovered from the system.

WARNING

To prevent possible equipment damage, property damage, personal injury or death, the following bullet points must be observed when installing the unit.

IMPORTANT NOTE: Remove wood shipping rails prior to installation of the unit.

NOTE: Units may be installed in heavy snow climates. Ensure no snow obstructs or covers the unit, as it may affect performance. Regularly check for snow build up.

All Installations:
Important Note: ***Unit should be energized 6 hours prior to compressor start up to ensure crankcase heater has sufficiently warmed the compressors. Compressor damage may occur if this step is not followed.***

NOTE: Verify that the voltage listed on the unit's serial plate matches what is provided by the site.

WARNING

The appliance shall be installed, Operated and stored in a room with a floor area not less than the minimum room area.

≥ 28.2 m²
303.5 ft²

IMPORTANT: REFER TO THE ALTITUDE ADJUSTED ROOM AREA CALCULATION REFERENCED LATER IN THIS MANUAL.

Proper installation of the unit ensures trouble-free operation. Improper installation can result in problems ranging from noisy operation to property or equipment damages, dangerous conditions that could result in injury or personal property damage and that are not covered by the warranty. Give this booklet to the user and explain it's provisions. The user should retain these instructions for future reference.

- To avoid possible illness or death of the building occupants, do NOT locate outside air intake device (economizer, manual fresh air intake, motorized fresh air intake) too close to an exhaust outlet, gas vent termination, or plumbing vent outlet. For specific distances required, consult local codes.
- Allow minimum clearances from the enclosure for fire protection, proper operation, and service access (see unit clearances). These clearances must be permanently maintained.
- Please ensure that the Indoor Coil Entering Air Temperature and Outdoor Temperature comply with the specified Operation Range as described below.

Operation Range:

	Cooling	Heating
Outdoor temperature	23 to 125°FDB (–5 to 52°CDB)	–13 to 60°FWB (–25 to 16°CWB)
Indoor coil Entering temperature	57 to 77°FWB (14 to 25°CWB)	59 to 80°FDB (15 to 27°CDB)
Indoor humidity	80%	-

Ground Level Installations Only:

- When the unit is installed on the ground adjacent to the building, a level concrete (or equal) base is recommended. Prepare a base that is 3" larger than the package unit footprint and a minimum of 3" thick.
- The base should also be located where no runoff of water from higher ground can collect in the unit.

Roof top Installations Only:

- To avoid possible property damage or personal injury, the roof must have sufficient structural strength to carry the weight of the unit(s) and snow or water loads as required by local codes. Consult a structural engineer to determine the weight capabilities of the roof.
- The unit may be installed directly on wood floors or on Class A, Class B, or Class C roof covering material.
- To avoid possible personal injury, a safe, flat surface for service personnel should be provided.

Unit Precautions

- Do not stand or walk on the unit.
- Do not drill holes anywhere in panels or in the base frame of the unit except where indicated. Unit access panels provide structural support.
- Do not remove any access panels until unit has been installed on roof curb or field supplied structure.
- Do not roll unit across finished roof without prior approval of owner or architect.
- Do not skid or slide on any surface as this may damage unit base. The unit must be stored on a flat, level surface. Protect the condenser coil because it is easily damaged.

NOTE: The unit may cause electronic noise generated from radio-frequency energy. The equipment complies to specifications that are designed to provide reasonable protection against such interference. However, there is no guarantee that interference will not occur in a particular installation.
It is therefore recommended to install the equipment and electric wires keeping proper distances away from stereo equipment, personal computers, etc.
Take necessary measure to minimize harmonic interference as needed.

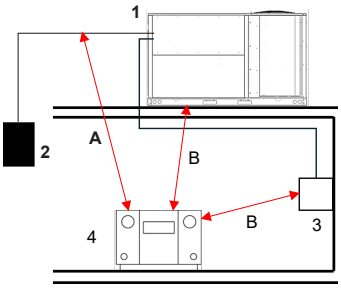

1. Roof top unit
2. Branch switch, overcurrent breaker
3. Remote controller
4. Personal computer or radio
   A. ≥ 60 in. (1500 mm)
   B. ≥40 in. (1000 mm)

An inverter unit may cause electronic noise generated from AM broadcasting. Examine where to install the main air conditioner and electric wires. Particularly for locations with weak reception, ensure there is a distance of at least 10 ft. (3 m) for remote controllers, place power wiring and transmission wiring in conduits, and ground the conduits.

Roof Curb Installations Only:

Curb installations must comply with local codes and should be done in accordance with the established guidelines of the National Roofing Contractors Association.

Proper unit installation requires that the roof curb be firmly and permanently attached to the roof structure. Check for adequate fastening method prior to setting the unit on the curb.

Full perimeter roof curbs are available from the factory and are shipped unassembled. Field assembly, squaring, leveling and mounting on the roof structure are the responsibility of the installing contractor. All required hardware necessary for the assembly of the sheet metal curb is included in the curb accessory.

WARNING

To prevent possible equipment damage, property damage, personal injury or death, the following bullet points must be observed when installing the unit.

- Sufficient structural support must be determined prior to locating and mounting the curb and package unit.
- Ductwork must be constructed using industry guidelines. The duct work must be placed into the roof curb before mounting the package unit. Our full perimeter curbs include duct connection frames to be assembled with the curb. Cantilevered type curbs are not available from the factory.
- Curb insulation, cant strips, flashing and general roofing material are furnished by the contractor.
- The curbs must be supported on parallel sides by roof members.
- The roof members must not penetrate supply and return duct opening areas as damage to the unit might occur.

NOTE: The unit and curb accessories are designed to allow vertical duct installation <u>before</u> unit placement. Duct installation <u>after</u> unit placement is not recommended.

CAUTION

All curbs look similar. To avoid incorrect curb positioning, check job plans carefully and verify markings on curb assembly. Instructions may vary in curb styles and supersedes information shown.

See the manual shipped with the roof curb for assembly and installation instructions.

CLEARANCES

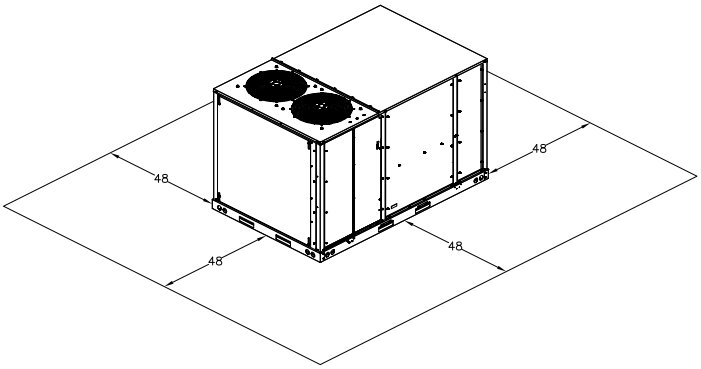

Unit Clearances
Figure 1

**In situations that have multiple units, a 48" minimum clearance is required between the condenser coils.*
Adequate clearance around the unit should be kept for safety, service, maintenance, and proper unit operation. A clearance of 48" is recommended on all sides of the unit to facilitate possible parts replacement, to allow service access and to insure proper ventilation and condenser airflow. The top of the unit should be completely unobstructed. If units are to be located under an overhang, there should be a minimum of 48" clearance and provisions made to deflect the warm discharge air out from the overhang. The unit should be installed remote from all building exhausts to inhibit ingestion of exhaust air into the unit fresh air intake.

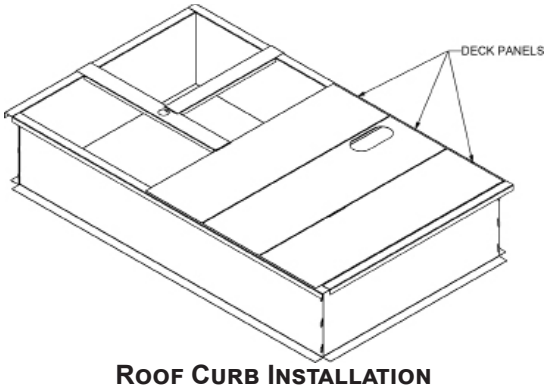

Roof Curb Installation
Figure 2

ROOF CURB POST-INSTALLATION CHECKS

After installation, check the top of the curb, duct connection frame and duct flanges to make sure gasket has been applied properly. Gasket should be firmly applied to the top of the curb perimeter, duct flanges and any exposed duct connection frame. If gasket is loose, re-apply using strong weather resistant adhesive.

Knocked Down Roof Curbs		
UNIT TONNAGE	DESCRIPTION	PART NUMBER
7.5 to 10	Curb 14" Tall	0270L01153
	Curb 24" Tall	0270L01154

Protrusion
Inspect curb to ensure that none of the utility services (electric) routed through the curb protrude above the curb.

Roof Curb Installation Check
Inspect the roof curb for correct installation. The unit and curb assembly should be level. Inspect the flashing of the roof mounting curb to the roof, especially at the corners, for good workmanship. Also check for leaks around gaskets. Note any deficiencies in a separate report and forward to the contractor.

NOTE: If fasteners are used to secure the duct to the curb, these should be installed horizontal into the duct curb flange.

CAUTION

If protrusions exist, do not attempt to set unit on curb.

ROOF TOP DUCT CONNECTIONS

Install all duct connections on the unit before placing the unit on rooftop.

Horizontal Discharge
Refer to IOD-7082 included in the literature pack for installing horizontal duct covers.

Flexible duct connectors between the unit and ducts are recommended. Insulate and weatherproof all external ductwork and joints as required and in accordance with local codes.

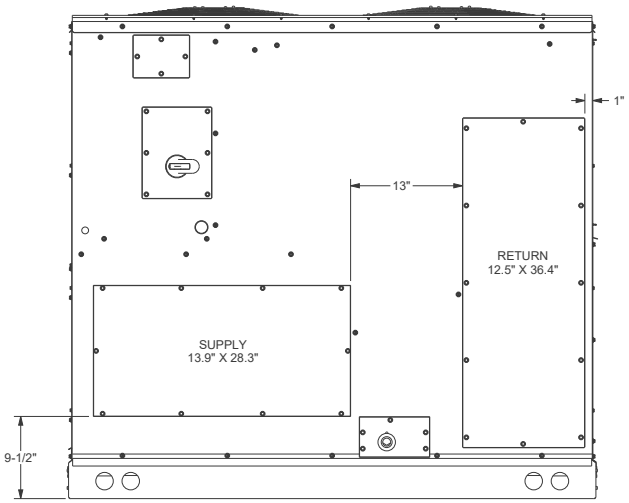

Horizontal Discharge Duct Connections
Figure 3

RIGGING DETAILS

WARNING

To prevent property damage, the unit should remain in an upright position during all rigging and moving operations. To facilitate lifting and moving when a crane is used, place the unit in an adequate cable sling.

CAUTION

Do not lift units two at a time. Provisions for forks have been included in the unit base frame. Minimum fork length is 72" to prevent damage to the unit.

Provisions for forks have been included in the unit base frame. No other fork locations are approved.

WARNING

To prevent possible equipment damage, property damage, personal injury or death, the following bullet points must be observed when installing the unit.

- Unit must be lifted by the four lifting holes located at the base frame corners.
- Lifting cables should be attached to the unit with shackles.
- The distance between the crane hook and the top of the unit must not be less than 60".
- Two spreader bars must span over the unit to prevent damage to the cabinet by the lift cables. Spreader bars must be of sufficient length so that cables do not come in contact with the unit during transport. The recommended length of the spreader bar(s) is approximately 10 inches wider than the product width. Adjust as necessary based on actual site conditions. Remove wood struts mounted beneath unit base frame before setting unit on roof curb. These struts are intended to protect unit base frame from fork lift damage. Removal is accomplished by extracting the sheet metal retainers and pulling the struts through the base of the unit. Refer to rigging label on the unit.
- Your unit may be equipped with a steel shipping brace located underneath the unit (under compressors). If installing on a roof curb, the brace **MUST** be removed. Follow the following instructions for removal.

CAUTION

When unit is suspended, boards and shipping brace will drop when screws are removed. To prevent personal injury, STAND CLEAR. Remove fork hole brackets, boards and shipping brace from bottom of unit before placing unit onto curb.

Before installing this unit on a roof curb:

1. Remove wooden struts per installation instructions. *These are the struts that are located in the fork holes and are used to protect the unit from damage while lifting with forks.*
2. Locate and remove the four (4) screws that attach the shipping brace to the side rails. There will be two (2) screws on each side of the unit. *See Figure 4*

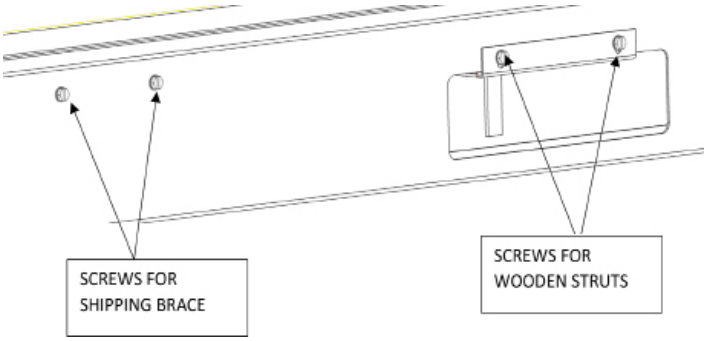

Shipping Brace Screw and Wooden Struts
Figure 4

3. Lift unit per the "Rigging Details" section of the installation instructions, observing all warnings and cautions. Lift the unit high enough off the ground to reach under and grasp the shipping brace.
4. Rotate the brace by tapping the ends until the brace falls free from the unit.
5. Dispose of the brace appropriately.

Important: If using bottom discharge with roof curb, ductwork should be attached to the curb prior to installing the unit. Ductwork dimensions are shown in Roof Curb Installation Instructions.

Refer to the Roof Curb Installation Instructions for proper curb installation. Curbing must be installed in compliance with the National Roofing Contractors Association Manual.

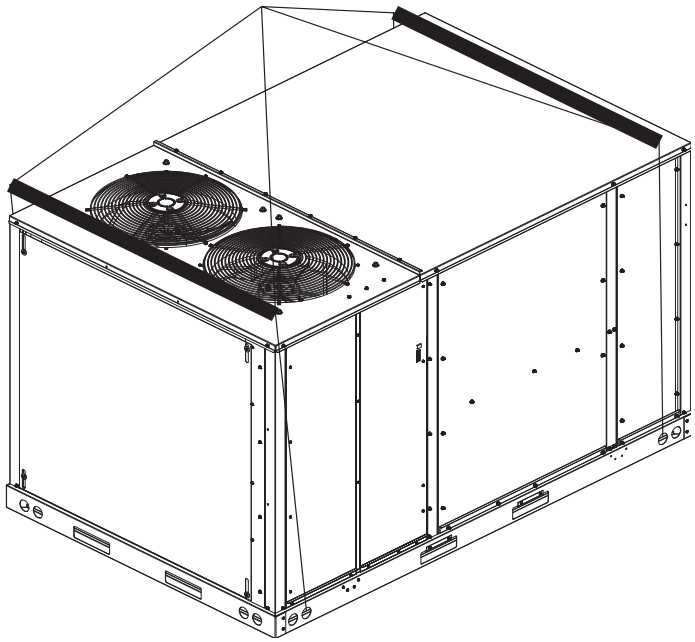

Unit Rigging
Figure 5

To assist in determining rigging requirements, unit weights and center of gravity are shown as follows:

WEIGHTS AND CENTER OF GRAVITY

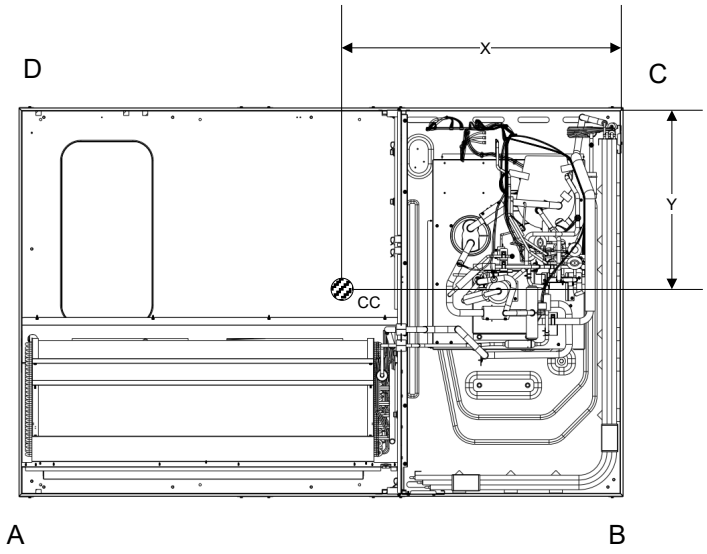

Corner and center of gravity locations
Figure 6

NOTE: Unit should be lifted at a point above center of gravity.

DVH WEIGHTS (lbs)	
Data	**7.5-10 T**
Corner weight- A	**329**
Corner weight- B	**269**
Corner weight- C	**442**
Corner weight- D	**254**
Unit operating weight	**1293**
Unit shipping weight	**1365**
X Center (inches)	**42.3**
Y Center (inches)	**27.9**

The numbers may slightly vary depending on installed options. These weights are without accessories installed.

CAUTION

To prevent severe damage to the bottom of the unit, do not fork lift unit after wood struts have been removed.

Bring condenser end of unit into alignment with the curb first. Lower unit carefully onto roof mounting curb. When a rectangular cantilever curb is used, care should be taken to center the unit. Check for proper alignment and orientation of supply and return openings with duct.

Rigging Removal

CAUTION

To prevent damage to the unit, do not allow crane hooks and spreader bars to rest on the roof of the unit.

Remove spreader bars, lifting cables and other rigging equipment.

ELECTRICAL WIRING

WARNING

HIGH VOLTAGE!
Disconnect all power before servicing or installing this unit. Multiple power sources may be present. Failure to do so may cause property damage, personal injury or death.

WARNING

HIGH VOLTAGE!
To avoid personal injury or death due to electrical shock, do not tamper with factory wiring. The internal power and control wiring of these units are factory-installed and have been thoroughly tested prior to shipment. Contact your local representative if assistance is required.

WARNING

RISK OF ELECTRIC SHOCK.
CAN CAUSE INJURY OR DEATH:
System contains oversize protective earthing (grounding) terminal which shall be properly connected.

CAUTION

To prevent damage to the wiring, protect wiring from sharp edges. Follow national electrical code and all local codes and ordinances. Do not route wires through removable access panels.

CAUTION

Conduit and fittings must be weather-tight to prevent water entry into the building.

For unit protection, use a fuse or HACR circuit breaker that is in excess of the circuit ampacity, but less than or equal to the maximum overcurrent protection device. DO NOT EXCEED THE MAXIMUM OVERCURRENT DEVICE SIZE SHOWN ON UNIT DATA PLATE.

When using residual current operated circuit breakers, be sure to use a high-speed type (0.1 seconds or less) 200 mA rated residual operating current.

This unit can be installed with a Ground-Fault Circuit Interrupter (GFCI). While this provides additional protection, a dedicated GFCI is not required with the grounding system in North America.

Do not install a phase-advancing capacitor. The unit has an inverter, and adding a phase-advancing capacitor can reduce the power factor improvement and may cause overheating due to high-frequency waves.

Ground the unit and keep it grounded. This reduces noise from the inverter and prevents leakage current from accumulating on the outer shell.

All line voltage connections must be made through weatherproof fittings. All exterior power supply and ground wiring must be in approved weatherproof conduit.

The main power supply wiring to the unit and low voltage wiring to accessory controls must be done in accordance with these instructions, Wiring Diagram, and the latest edition of the National Electrical Code (ANSI/NFPA 70), and all local codes and ordinances.

The main power supply shall be three-phase, three wire with a proper ground.

The unit is factory wired for the voltage shown on the unit's data plate.

NOTE: If supply voltage is 208V, lead on primary of transformer(s) must be moved from the 240V to the 208V tap. Refer to wiring diagram on unit for details.

Main power wiring should be sized for the minimum circuit ampacity shown on the unit's serial plate. Size wires in accordance with the ampacity tables in Article 310 of the National Electrical Code. If long wires are required, it may be necessary to increase the wire size to prevent excessive voltage drop. Wires should be sized for a maximum of 3% voltage drop.

CAUTION

To avoid risk of property damage, personal injury or fire, use only copper conductors.

CAUTION

To prevent improper and dangerous operation due to wiring errors, label all wires prior to disconnection when servicing controls. Verify proper operation after servicing.

NOTE: A weather-tight disconnect switch, properly sized for the unit total load, must be field or factory installed. An external field supplied disconnect may be mounted on the exterior panel.

Ensure the data plate is not covered by the field-supplied disconnect switch.

- Some disconnect switches are not fused. Protect the power leads at the point of distribution in accordance with the unit data plate.
- The unit must be electrically grounded in accordance with local codes or, in the absence of local codes, with the latest edition of the National Electrical Code ANSI/NFPA 70, and/or the Canadian Electrical Code, CSA C22.1, Part 1. A ground lug is provided for this purpose. Do not use the ground lug for connecting a neutral conductor.
- Connect power wiring to the electrical power block located within the indoor control box.

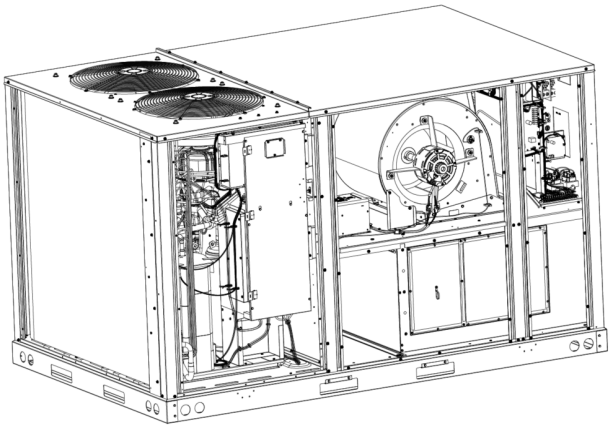

Figure 7A

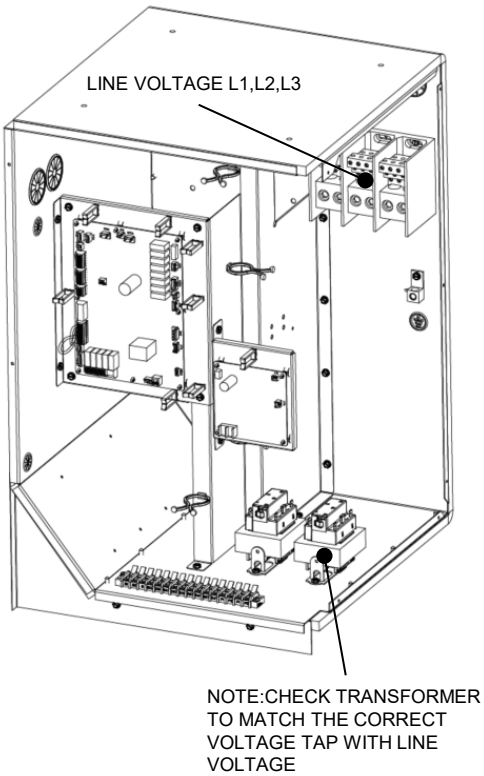

Indoor control box
Figure 7B

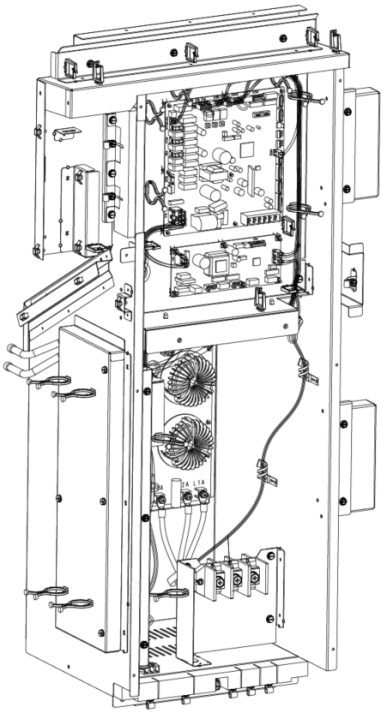

Outdoor Control Box
Figure 7C

NOTE: DEPENDING ON THE OPTIONS INSTALLED, THE LOCATION OF THE COMPONENTS MAY VARY IN SOME MODELS.

WARNING

Failure of unit due to operation on improper line voltage or with excessive phase unbalance constitutes product abuse and may cause severe damage to the unit electrical components.

Areas Without Convenience Outlet

It is recommended that an independent 115V power source be brought to the vicinity of the roof top unit for portable lights and tools used by the service mechanic.

NOTE: Refer to local codes for requirements. These outlets can also be factory installed.

Units installed on Roof Tops

Main power and low voltage wiring may enter the unit through the bottom of the outdoor control box next to the compressor or through the roof curb. Install conduit connectors through the designated base pan entrance location. External connectors must be weatherproof. All holes in the unit base must be sealed (including those around conduit nuts) to prevent water leakage into building. All required conduit and fittings are to be field supplied.

Supply voltage to roof top unit must not vary by more than 10% of the value indicated on the unit data plate. Phase voltage unbalance must not exceed 2%. Contact your local power company for correction of improper voltage or phase unbalance.

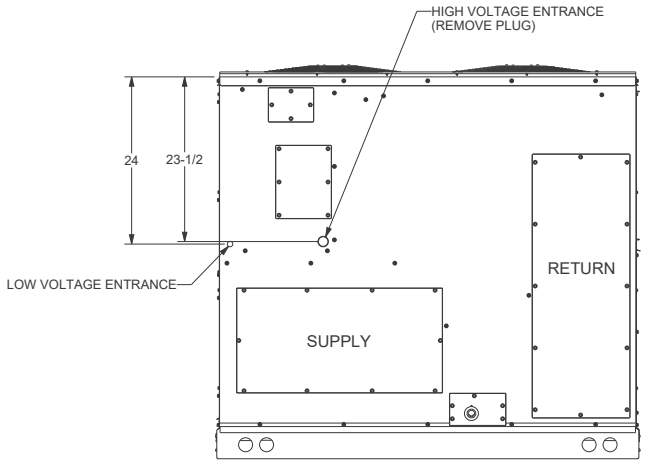

Figure 8A

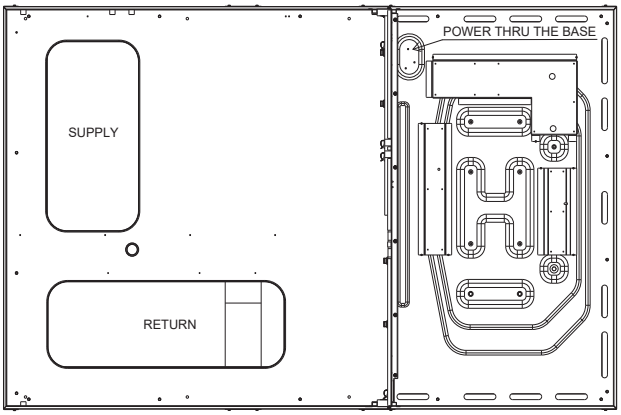

ELECTRICAL ENTRANCE AND THRU CURB
Figure 8B

"Through the Base Pan Kit" Part Numbers
TTBCKHE02
TTBCKHE02FI (Factory Kit)

Low Voltage Control Wiring

1. Remote Controller (e.g., BRC1NRV72 or higher) must be installed for unit operation.
2. Locate remote controller or remote sensor in the conditioned space where it will sense average temperature. Do not locate the device where it may be directly exposed to supply air, sunlight or other sources of heat. Follow installation instructions packaged with the remote controller.
3. Route remote controller wires from sub-base terminals to the unit. Control wiring should enter through the condenser panel opening or through curb indicated in “Electrical Entrance and Thru Curb” Figure 8B. Connect thermostat and any accessory wiring to low voltage terminal block P1/P2 in the indoor control box.

NOTE: Refer to unit wiring diagrams for remote controller or remote sensor connections.

NOTE: Recommended Remote Controller Wiring: 16/18 AWG - 2 Conductor - Stranded - Non-Shielded wire. Remote Controller wiring should not exceed 1640 ft.

CIRCULATING AIR AND FILTERS

Ductwork

The supply duct from the unit through a wall may be installed without clearance. However, minimum unit clearances must be maintained (see “Clearances" section). The supply duct should be provided with an access panel large enough to inspect the air chamber downstream of the heat exchanger. A cover should be tightly attached to prevent air leaks. False ceilings or drop ceilings may be used as a return air plenum.

NOTE: Adequate return grills have to be supplied for each room for proper return for that space.

Ductwork dimensions are shown in the roof curb installation manual.

If desired, supply and return duct connections to the unit may be made with flexible connections to reduce possible unit operating sound transmission.

CONDENSATE DRAIN CONNECTION

Condensate Drain Connection

A 3/4" female NPT drain connection is supplied on the end of the unit and bottom of the drain pan for condensate piping. An external trap must be installed for proper condensate drainage. Hand tighten drain fitting to the drain connection.

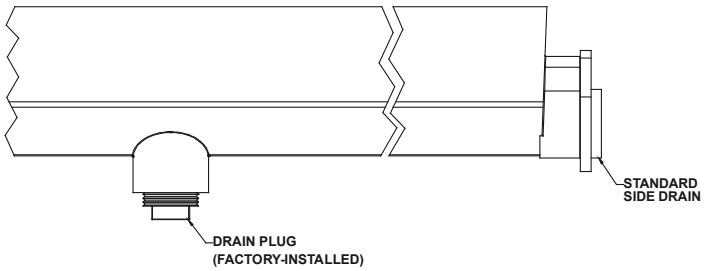

Drain Pan (Side View)
Figure 9

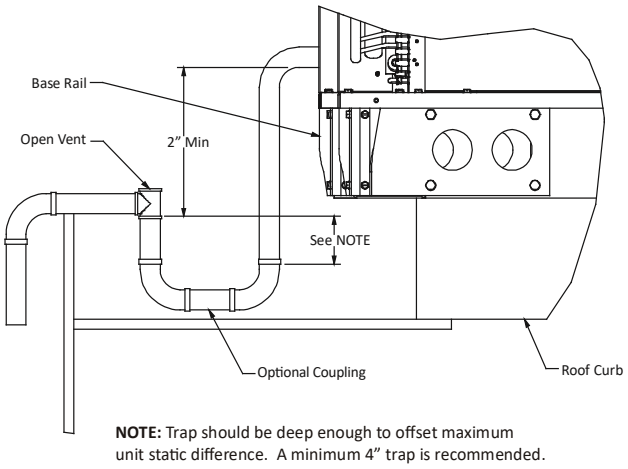

DRAIN CONNECTION
Figure 10

Install condensate drain trap as shown. Use 3/4" drain line and fittings or larger. Do not operate without trap.

Horizontal Drain

Drainage of condensate directly onto the roof may be acceptable; refer to local code. It is recommended that a small drip pad of either stone, mortar, wood or metal be provided to prevent any possible damage to the roof.

Vertical Drain

To use the bottom drain connection, remove the drain plug from the bottom connection and install it in the horizontal connection. Refer to local code for proper drain routing.

NOTE: All threaded connections use pipe sealer.

Cleaning

Due to the fact that the drain pans in any air conditioning unit will have some moisture in them, algae and fungus will grow due to airborne bacteria and spores. Periodic cleaning is necessary to prevent the build-up from plugging the drain.

To remove the drain pan for cleaning, remove the drain pan cover first (located on duct panel) then slide out the drain pan.

STARTUP, ADJUSTMENTS, AND CHECKS

Pre-Startup Instructions - General

Prior to the beginning of Startup, Adjustment, and Checks procedures, the following warnings, steps, and checks should be read and completed.

WARNING

HIGH VOLTAGE!
To avoid personal injury or death due to electrical shock, bond the frame of this unit to the building electrical ground by use of the grounding terminal provided or other acceptable means. Disconnect all power and lockout / tagout before servicing or installing this unit.

CAUTION

To prevent property damage or personal injury, do not start the unit until all necessary pre-checks and tests have been performed.

WARNING

MOVING MACHINERY HAZARD!
To prevent possible personal injury or death, disconnect power to the unit and padlock in the "OFF" position before servicing fans.

On new installations, or if a major component has been replaced, the operation of the unit must be checked.

Check unit operation as outlined in the following instructions. If any sparking, odors, or unusual sounds are encountered, shut off electrical power and recheck for wiring errors, or obstructions in or near the blower motors. **Duct covers must be removed before operating unit in horizontal duct applications. (This only applies to units that have horizontal duct attached.)**

The Startup, Adjustments, and Checks procedure provides a step-by-step sequence which, if followed, will assure the proper startup of the equipment in the minimum amount of time. Air balancing of duct system is not considered part of this procedure. However, it is an important phase of any air conditioning system startup and should be performed upon completion of the Startup, Adjustments, and Checks procedure. The Startup, Adjustments, and Checks procedure at outside ambients below 55°F should be limited to a readiness check of the refrigeration system with the required final check and calibration left to be completed when the outside ambient rises above 55°F.

Temporary Heating Or Cooling

If the unit is to be used for temporary heating or cooling, a "Startup, Adjustments, and Checks" must first be performed in accordance with this manual. Damage or repairs due to failure to comply with these requirements are not covered under the warranty. **After** the machines are used for temporary heating or cooling, inspect the coils, fans, and motors for unacceptable levels of construction dust and dirt and install new filters.

Contractor Responsibility

The installing contractor must be certain that:

- All supply and return air ductwork is in place, properly sealed, and corresponds with installation instructions.
- All remote controllers are mounted and wired in accordance with installation instructions.
- All electric power, and the condensate drain installation have been made to each unit on the job. These main supply lines must be functional and capable of operating all units simultaneously.
- Air filters are in place.

Installation Check

Check that the unit is properly installed, to avoid abnormal noises and vibrations when starting up the unit.

Obstructions, Fan Clearance and Wiring

Remove any extraneous construction and shipping materials that may be found during this procedure. Rotate all fans manually to check for proper clearances and that they rotate freely. Check for bolts and screws that may have jarred loose during shipment to the job site. Re-tighten if necessary. Re-tighten all electrical connections.

Field Duct Connections
Verify that all duct connections are tight and that there is no air bypass between supply and return.

Filter Section Check
Remove filter section access panels and check that filters are properly installed. Note airflow arrows on filter frames.

Pre-startup Precautions
It is important for your safety that the unit has been properly grounded during installation. Check ground lug connection in indoor control box for tightness prior to closing circuit breaker or disconnect switch. Verify that supply voltage on line side of disconnect agrees with voltage on unit identification plate and is within the utilization voltage range as indicated in Appendix B Electrical Data.

System Voltage - The nominal voltage value assigned to a circuit or system for the purpose of designating its voltage class.

Nameplate Voltage - The voltage assigned to a piece of equipment for the purpose of designating its voltage class and for the purpose of defining the minimum and maximum voltage at which the equipment will operate.

Verify Unit Phasing - 3 phase equipment must verify proper phasing to confirm compressors and motors are not rotating backwards.

Utilization Voltage - The voltage of the line terminals of the equipment at which the equipment must give fully satisfactory performance. Once it is established that supply voltage will be maintained within the utilization range under all system conditions, check and calculate if an unbalanced condition exists between phases. Calculate percent voltage unbalance as follows.

Three Phase Models Only

$$\text{3) PERCENT VOLTAGE UNBALANCE} = 100 \times \frac{\text{2) MAXIMUM VOLTAGE DEVIATIONS FROM AVERAGE VOLTAGE}}{\text{1) AVERAGE VOLTAGE}}$$

HOW TO USE THE FORMULA:
EXAMPLE: Line to Neutral Voltage of 220, 216, and 213
1) Average Voltage = 220+216+213=649 / 3 = 216
2) Maximum Voltage Deviations from Average Voltage = 220 - 216 = 4

$$\text{3) Percent Voltage Unbalance} = 100 \times \frac{4}{216} = \frac{400}{216} = 1.8\%$$

Percent voltage unbalance MUST NOT exceed 2%.

Field Wiring
Be sure that all field wiring has been carried out according to the instructions, Wiring Diagram, and the latest edition of the National Electrical Code (ANSI/NFPA 70), and all local codes and ordinances.

Ground Wiring
Be sure that the ground wires have been connected properly and that the ground terminals are tightened.

Insulation Test of the Main Power Circuit
Using an insulation resistance tester set for 500 V, check that the insulation resistance of 1 MΩ or more is attained by applying a voltage of 500 V DC between power terminals and ground. Never use this test on the transmission wiring.

Fuses, Circuit Breakers, or Protection Devices
Check that the fuses, circuit breakers, or the locally installed protection devices are suitable for the unit. Be sure that neither a fuse nor a protection device has been bypassed.

Internal Wiring
Visually check the control box and the inside of the unit for loose connections or damaged electrical components.

Damaged Equipment
Check inside of the unit for damaged components or squeezed pipes.

Refrigerant Leak
Check inside of the unit for refrigerant leakage. If there is a refrigerant leak, you need to repair or replace leaking component. If the repair is unsuccessful, call your local dealer. Wear proper PPE when repairing refrigerant leak and avoid any contact between bare skin and the refrigerant.

Oil Leak
Check the compressor for oil leakage. If there is an oil leak, you need to repair or replace leaking component. If the repairing is unsuccessful, call your local dealer.

Air Inlet / Outlet
Check that the air inlet and outlet of the unit is not obstructed by paper sheets, cardboard, or any other material.

COMMISSIONING

It is possible to confirm the unit status from segment display on the printed circuit board(PCB) in the outdoor control box.
Also, it is required to give some input to the PCB in the outdoor control box or remote controller. This chapter will describe how manual input is possible by operating the push buttons on the PCB and reading the feedback from the 7 segment displays.
For field setting instructions using the remote controller, refer to the manual of the remote controller.
Begin with power turned off at all disconnects and wait until the unit is ready for operation. Please refer to ‘Initialization’ later in this section on how to confirm the status.

Accessing the push buttons on the printed circuit board

It is not required to open the complete outdoor control box to access the push buttons on the PCB and read out the 7 segment display(s).

1. Open the panel in front of the Outdoor control box.
2. Open the inspection door.

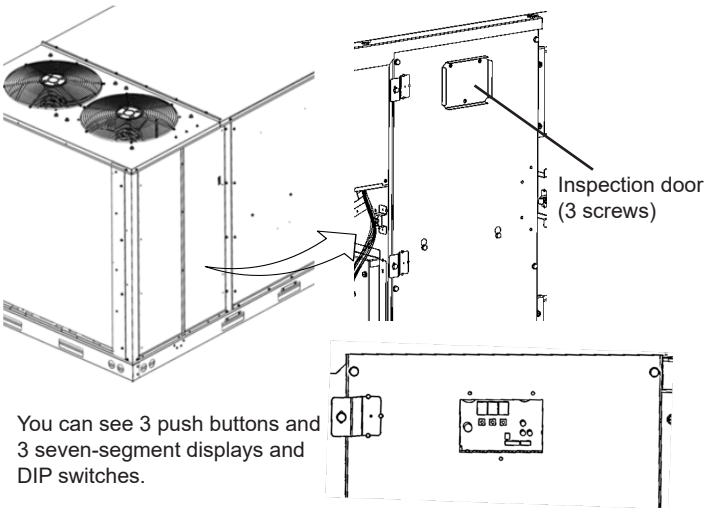

NOTE: Operate the switches and push buttons with an insulated stick (such as a closed ballpoint pen) to avoid touching of live parts.

Location of the 7 segment displays, buttons and DIP switches:

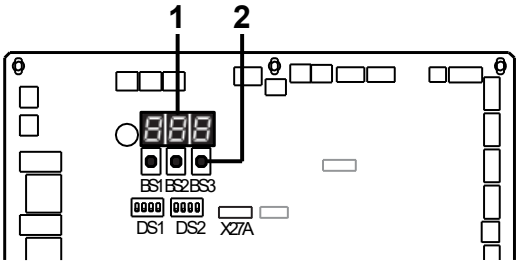

BS1	for changing setting mode
BS2, BS3	for charging field setting
DS1, DS2	DIP Switches
1	7 segment displays (3x)
2	Push buttons (3x)

Segment display indications:

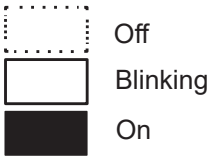

Operating the push buttons on the PCB.

By operating the push buttons, it is possible to:

- Perform special actions (recovery mode, etc).
- Perform field settings (demand operation, etc).

Below, the procedure explains how to operate the push buttons to reach the required mode in the menu, select the correct setting, and modify the value of the setting. This procedure can be used any time special settings and regular field setting are discussed in this manual.

- Setting definition: [A-B]=C; A=mode; B=setting; C=setting value.
- A, B and C are numerical values for field settings. Parameter C must be defined.
- It can be a chosen from a set (0, 1, 2, 3, 4, 5, …) or regarded as an ON/OFF (1 or 0) depending on the contents.

NOTE: During special operation (e.g., test run, etc.) or when a malfunction occurs, information will contain letters and numerical values.

Initialization: Default Situation

Turn on the power supply of the units. When the communication between PCBs is established and normal, the segment indication state will be as follows (default situation when shipped from factory):
When turning on the power supply, the display flashes on and off. First checks of the power supply are executed (1-2 minutes).

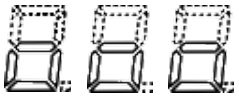

When no trouble occurs: lighted as indicated (8-10 minutes).

Ready for operation: blank display indication as indicated.

When the above situation cannot be confirmed after 12 minutes, the error code can be checked on user interface and 7 segment display. The communication wiring should be checked at first.

NOTE: Be sure to turn the power on at least 6 hours before operation in order to have power running to the crank case heater.

Accessing Modes

BS1 is used to change the mode you want to access.

- Access mode 1
  Push BS1 one time. Segment indication changes to:

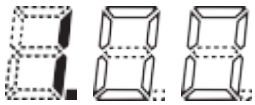

- Access mode 2
  Push BS1 for at least 5 seconds. Segment indication changes to:

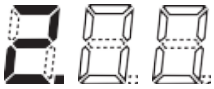

NOTE: If you get confused in the middle of the process, push BS1. Then it returns to idle situation (no indication on segment displays: blank.)

Mode 1

Mode 1 is used to monitor the status of the unit.

- Changing and access the setting in mode 1:
  - Once mode 1 is selected (push BS1 one time), you can select the desired setting. It is done by pushing BS2. Accessing the selected setting's value is done by pushing BS3 one time.
- To quit and return to the initial status, press BS1.

Example:

Checking parameter [1-50] to confirm the outdoor air temperature sensor value.
[A-B]=C in this case defined as: A=1; B=50; C=the value we want to know/monitor:

- Make sure the segment indication is displayed in operational default mode as shipped from the factory.
- Push BS1 one time; result segment display:

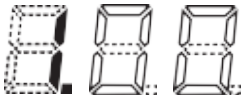

Result: mode 1 is accessed.

- Push BS2 50 times; result segment display:

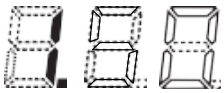

Result: mode 1 setting 50 is addressed.

- Push BS3 one time; the value which is returned (depending on the actual field situation) is the outdoor air temperature sensor value.

Result: mode 1 setting 50 is addressed and selected, return value is monitored information.

- To leave the monitoring function, push BS1 one time. You will return to the default situation when shipped from the factory.

Mode 1 List

[1-17]= shows the most recent error code.
[1-18]= shows the 2nd most recent error code.
[1-19]= shows the 3rd most recent error code

If the latest error codes are reset by accident on a user interface, they can be checked again through these monitoring settings. For the content or reason behind the error code, see Error code list, where most relevant error codes are explained. Detailed information about error codes can be found in the service manual of this unit.

[1-40]= shows the current cooling comfort setting. See Configuration method of the compressor operation for more details about this setting.
[1-41]= shows the current heating comfort setting. See Configuration method of the compressor operation for more details about this setting.
[1-42]= shows compressor discharge pressure [PSI]
[1-43]= shows compressor suction pressure [PSI]
[1-47]= shows compressor discharge pipe temperature [°F]
[1-49]= shows compressor casing temperature [°F]
[1-50]= ambient temperature sensor value [°F]
[1-51]= shows compressor suction pipe temperature [°F]

Mode 2

Mode 2 is used to set field settings of the unit.

- Changing and accessing the setting in mode 2:
  Once mode 2 is selected (push BS1 for more than 5 seconds), you can select the desired setting. This is done by pushing BS2. Accessing the selected setting's value is done by pushing BS3 one time.
- To quit and return to the initial status, press BS1.
- Changing the value of the selected setting in mode 2:
  - After accessing the selected setting's value, BS2 is used to select the required value of the selected setting.
  - When the required value is selected, you can define the change of value by pushing BS3 one time.
  - Press BS3 again to start operation according to the chosen value.

Example:

Checking the content of parameter [2-81] (to define the eco comfort setting under cooling operation).
[A-B]=C in this case defined as: A=2; B=81; C=the value we want to know/change
Make sure the segment indication is as during normal operation (default situation when shipped from factory).

- Push BS1 for over 5 seconds; result segment display:

- Push BS2 81 times

Result: mode 2 setting 81 is addressed.

- Push BS3 one time; the value which is returned (depending on the actual field situation), is the status of the setting. In the case of [2- 81], default value is 1, which means 'Mild'. Result: mode 2 setting 81 is addressed and selected, return value is the current setting situation.
- To change the value of the setting, push BS2 until the required value appears on the segment indication. When achieved, define the setting value by pushing BS3 one time. To start operation according to the chosen setting, confirm again by pushing BS3.
- To leave the field settings, push BS1 one time. You will return to the default situation when shipped from the factory.

Mode 4 and 6

Mode 4 and 6 are also used to set field settings of the unit. When in mode2, pressing BS1 for more than 5 seconds allows access to mode4.
When in mode4, pressing BS1 for more than 5 seconds allows access to mode6.
For selecting setting and changing value, refer to the description of mode2.

FIELD SETTING LIST AND THE UNIT CONFIGURATION PROCEDURE

Field settings can be configured via either the Outdoor Control Box PCB or a remote controller equipped with setting functions (e.g., BRC1NRV series). Ensure that the unit is in the "Ready for operation" state, as indicated on the segment display of the Outdoor Control Box, before proceeding with the configuration.(For further details, refer to the Initialization on this section.) The following section outlines the unit operation and provides detailed information on each configurable setting.

If the field settings are changed from a device other than the BRC, please reset the main power after completing the setting. If the main power is not reset, the changes may not be applied.

How to read the tables.

Setting address
PCB: Outdoor control box segment
RC: Remote controller

Setting content

Example)

PCB [2-6]	RC [4A-6]	Forced operation
0(Default)		OFF
1		ON

Setting Value

Field Settings for Special Operation

The following field settings are mainly used to start or stop special operations for service maintenance and installation.

Forced Operation

PCB [2-6]	RC [4A-6]	Forced Operation
0(Default)		OFF
1		ON

When [Forced Operation] set to "ON", the unit starts operation regardless of indoor temperature or Setpoint.

Refrigerant Recovery / Evacuation Mode

PCB [2-21]	RC [-]	Refrigerant Recovery/ Evacuation Mode
0(Default)		OFF
1		ON

To achieve a free pathway to recovering refrigerant out of the unit or to remove residual substances or to evacuate the system, it is necessary to apply a setting which will open required valves in the refrigerant circuit so the recovering of refrigerant or evacuation process can be done properly. To stop this mode, push BS3. If BS3 is not pushed, the system will remain in the mode. This setting cannot be changed from the controller but only from BS buttons on the outdoor control box PCB.

RDS Leak Operation Test Mode

PCB [4-95]	RC [25-15]	RDS Leak Operation Test Mode
1(Default)		OFF
2		ON

A leak operation test mode is available to simulate the operation when a refrigerant leak is detected. Setting the above setting to "ON" will initiate the test mode, while setting it to "OFF" will perform mitigation for 5 minutes before stopping the test mode. Use this mode to check the operation of zoning dampers and other components. If any other error is detected in the unit during the test mode, the corresponding operation will take priority.

Economizer Test Mode

To determine the minimum position of the economizer, a test operation mode is provided to check the damper position and ventilation volume on site.
By turning on the following [Economizer Test Mode] and setting the [Test Mode Position] to a desired value, the damper will open to the specified position when the unit is operated in Fan Mode.

PCB [6-30]	RC [41-14]	Economizer Test Mode	Test Mode Position
1(Default)		OFF	-
2		ON	5%
3			10%
4			15%
5			20%
6			25%
7			30%
8			35%
9			40%
10			45%
11			50%
12			55%
13			60%
14			65%
15			70%

CONFIGURATION METHOD OF SENSORS

The following field settings are used to change the sensor configuration which determine the unit operation.

Indoor Temperature Selection

PCB [4-2]	RC [20-2]	Indoor Temperature Selection
2		Space/Return temperature sensor
3 (Default)		Temperature sensor on remote controller
4		BACnet™[AV69]

The indoor temperature which is mainly used to determine unit operation can be selected. Depending on the setting, it is possible to switch between the sensor built into the remote controller or the sensor connected to the indoor control box.
When BACnet™ is selected, the value transmitted via BACnet™ is used. For details, refer to the Submittal Data Sheet of BACnet™ communication.

BACnet™ is a trademark of ASHRAE.

Indoor Humidity Selection

PCB [6-9]	RC [40-9]	Indoor Humidity Selection
1(Default)		Sensor connected to A8P
2		BACnet[AV70]

The indoor humidity is used when controlling dehumidification with the hot gas reheat system or economizer cooling based on air enthalpy. By default, the system is set to use the sensor connected to A8P inside the indoor control box. When BACnet™ is selected, the value transmitted via BACnet™ is used. For details, refer to the Submittal Data Sheet of BACnet™ communication.

Outdoor Temperature / Humidity Selection

PCB [6-8]	RC [40-8]	Outdoor Temperature	Outdoor Humidity
1 (Default)		Default ambient sensor	None
2		Default ambient sensor	BACnet™[AV72]
3		Economizer inlet temperature sensor	None
4		Economizer inlet temperature sensor	Economizer inlet humidity sensor
5		Economizer inlet temperature sensor	BACnet™[AV72]
6		BACnet™ [AV71]	None
7		BACnet™ [AV71]	BACnet™[AV72]

The default ambient sensor is installed near the outdoor control box. The economizer inlet sensor refers to the sensor mounted at the outdoor air intake section of the economizer damper.
If high-precision control based on the actual temperature of the incoming outdoor air is required, install the economizer inlet sensor and select it accordingly. When BACnet™ is selected, the value transmitted via BACnet™ is used. For details, refer to the Submittal Data Sheet of BACnet™ communication.

CO2 Sensor Selection

PCB [6-10]	RC [40-10]	Co2 Sensor Selection
1(Default)		None
2		Sensor connected to A8P
3		BACnet[AV73]

The space CO2 sensor is mainly used to control the economizer. When BACnet™ is selected, the value transmitted via BACnet™ is used. For details, refer to the Submittal Data Sheet of BACnet™ communication.

Supply Air Temperature Sensor

PCB [6-11]	RC [40-11]	Supply air temperature sensor
1(Default)		None
2		Sensor connected to A8P

The supply air temperature sensor is mainly used to control the multizone VAV with supply air temperature control. Set to ‘2’ when using supply air temperature sensor.

Sensor Offset

The sensor reading value can be adjusted on site.
If there is a discrepancy between the reading of a field-installed sensor and the sensor connected to the unit's PCB, please use the following offset setting to make adjustments. The value that defines the unit's operation is calculated as:

[Operation value] = [Sensor reading] + [Offset value]

For instructions on how to check the unit sensor readings, refer to the Installation Manual of the remote controller. Some controller models may not support this function

NOTE: Perform the offset adjustment only after confirming that the sensor readings have sufficiently stabilized.

Setting Item	Supply air temperature offset		Outdoor air temperature offset		Outdoor air humidity offset		Space/Return air temperature offset1(note		Space/Return air temperature offset2(note		Space/Return air humidity offset		Duct static pressure offset		CO2 sensor offset	
Setting address	PCB	RC	PCB	RC	PCB	RC	PCB	RC	PCB	RC	PCB	RC	PCB	RC	PCB	RC
	[6-0]	[40-0]	[6-1]	[40-1]	[6-2]	[40-2]	[6-3]	[40-3]	[6-4]	[40-4]	[6-5]	[40-5]	[6-6]	[40-6]	[6-7]	[40-7]
1	-7F		-7F		-7%		-7F		0(Default)		-7%		-0.14"		-140ppm	
2	-6F		-6F		-6%		-6F		+0.06F		-6%		-0.12"		-120ppm	
3	-5F		-5F		-5%		-5F		+0.11F		-5%		-0.10"		-100ppm	
4	-4F		-4F		-4%		-4F		+0.17F		-4%		-0.08"		-80ppm	
5	-3F		-3F		-3%		-3F		+0.22F		-3%		-0.06"		-60ppm	
6	-2F		-2F		-2%		-2F		+0.28F		-2%		-0.04"		-40ppm	
7	-1F		-1F		-1%		-1F				-1%		-0.02"		-20ppm	
8	±0F (Default)		±0F (Default)		±0% (Default)		±0F (Default)				±0% (Default)		+/-0.00" (Default)		+/-0ppm (Default)	
9	+1F		+1F		+1%		+1F				+1%		+0.02"		+20ppm	
10	+2F		+2F		+2%		+2F				+2%		+0.04"		+40ppm	
11	+3F		+3F		+3%		+3F				+3%		+0.06"		+60ppm	
12	+4F		+4F		+4%		+4F				+4%		+0.08"		+80ppm	
13	+5F		+5F		+5%		+5F				+5%		+0.10"		+100ppm	
14	+6F		+6F		+6%		+6F				+6%		+0.12"		+120ppm	
15	+7F		+7F		+7%		+7F				+7%		+0.14"		+140ppm	

NOTE: The space /return air temperature has two offset values: Offset1 for coarse adjustment and Offset2 for fine adjustment. The sum of these two values is used as the Offset value.

CONFIGURATION METHOD OF THE BLOWER OPERATION

The following field settings are used to change the blower operation.

Blower Speed Setting

Blower speed % for High tap can be set.
First, refer to BLOWER PERFORMANCE DATA and select the target blower speed %.
A percentage value can be set in the format XX.X% using the following three field setting parameters.

PCB [4-12]	RC [20-12]	Blower speed % Tens place value
1-9		1-9 (Default:1)

PCB [4-13]	RC [20-13]	Blower speed % Ones place value
1-10		0-9 (Default:1)

PCB [4-14]	RC [20-14]	Blower speed % First decimal place value
1-10		0-9 (Default:1)

Example:

If 20-12 = 5, 20-13 = 2, and 20-14 = 8, then the Blower speed % will be 52.8%.
If the above parameters are all set to '1', the value will not be 11.1%, but rather the factory default airflow setting.

Regarding the setting of the units place and the first decimal place, if the field setting is set to 10, the number will be recognized as 0.

If BRC1NRV72 or newer is used as the remote controller, blower speed % can be directly adjusted from the service setting menu.
Refer to Installation manual of the controller for the detail.

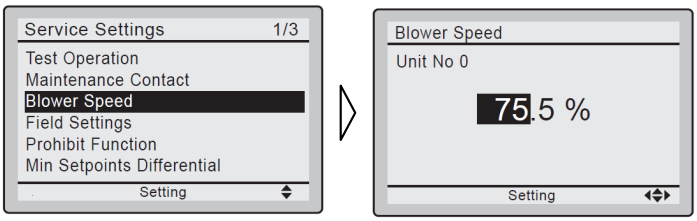

Blower Tap Setting During Defrost Operation

It is possible to select the blower tap during defrost operation. The higher the blower speed, the faster the defrost process is completed; however, since the unit operates in a cooling cycle during defrost, cold air may be supplied to the space, causing the room temperature to drop. As a feature of inverter models, defrosting can be carried out with the blower stopped, and this is the factory default setting. If the setting to operate the heater during defrost (described later) is enabled, the blower will operate at H tap regardless of this setting.

PCB [2-50]	RC [4A-50]	Blower Tap During Defrost
0(Default)		OFF
1		Minimum
2		Low tap
3		Medium tap
4		High tap
5		Setting tap

NOTE: When the outside temperature is extremely low (below 5°F), the blower may operate even if the above setting is set to "OFF". This occurs because the system uses indoor air heat to assist defrosting when outdoor capacity is insufficient. In such cases, cold air may blow during defrost. Installing an electric heater and setting the above option to "Setting tap" is recommended for use under these conditions.

Blower Tap Setting During Thermo-off

When the system is turned ON but compressor operation is not required due to no cooling or heating demand(e.g., the room temperature is lower than the setpoint during cooling mode), this state is referred to as Thermo-OFF. It is possible to select the blower tap during this state.

PCB [4-35]	RC [22-3]	Blower Tap At Heating Thermo-off
1 (Default)		Minimum (see note)
2		Setting tap on RC
3		OFF

PCB [4-38]	RC [22-6]	Blower Tap At Cooling Thermo-off
1		Minimum (see note)
2 (Default)		Setting tap on RC
3		OFF

NOTE: Blower tap is low when ventilation damper is installed.

On default setting, the blower operates at a selected tap even during cooling thermo-OFF, serving as a circulator to provide a sense of coolness. On the other hand, in heating mode, the default setting is to minimize the blower tap during Thermo-OFF to avoid cold draft.
It is also possible to set the blower airflow to OFF during Thermo-OFF; however, this setting is not recommended if the unit uses the return air temperature as the indoor temperature because turning off the blower may delay the detection of room temperature changes while thermo-off, potentially causing the unit to fail to respond appropriately to temperature variations. Caution is advised in such cases.
When the unit is used as a multizone VAV system, the blower is turned OFF while External ON/OFF Request Signal is off regardless of the above settings, in order to avoid blower operation while the zoning dampers are closed.

CONFIGURATION METHOD OF THE COMPRESSOR OPERATION

The following field settings are used to change the compressor operation.

Cooling and Heating Capacity Learning Control

Optimizes the operation of the cooling and heating system to maintain stable capacity.

NOTE: Enabling this setting may delay the system's response to sudden or significant changes in building load.

PCB [2-62]	RC [4a-62]	Capacity learning control
0(Default)		OFF
1		Cooling adjustment
2		Heating adjustment
3		Cooling and heating adjustment

Cooling and Heating Comfort Setting

The inverter compressor adjusts the unit's capacity according to the building load. Internally, it calculates the optimal refrigerant temperature—Te (evaporating temperature) during cooling and Tc (condensing temperature) during heating—based on the current load. The compressor frequency is then determined to meet the calculated target refrigerant temperature. This comfort setting allows adjustment of how quickly the space/return temperature approaches the setpoint by Te and Tc calculation.

PCB [2-81]	RC [4a-81]	Cooling comfort setting
0		Eco
1(Default)		Mild
2		Quick
3		Powerful

PCB [2-82]	RC [4a-82]	Heating comfort setting
0		Eco
1(Default)		Mild
2		Quick
3		Powerful

Powerful

Allows overshoot during heating or undershoot during cooling relative to the target refrigerant temperature, enabling rapid achievement of the desired room temperature. Overshoot is permitted immediately from system startup.

- During cooling operation, Te may temporarily drop to 37°F (3°C), depending on conditions.

- During heating operation, Tc may temporarily rise to 120°F (49°C), depending on conditions.

Quick

Allows overshoot during heating or undershoot during cooling relative to the target refrigerant temperature, supporting fast room temperature adjustment. Overshoot is permitted immediately from system startup.

- During cooling operation, the evaporating temperature may temporarily drop to 43°F (6°C), depending on conditions.
- During heating operation, the condensing temperature may temporarily rise to 115°F (46°C), depending on conditions.

Mild

Overshoot during heating or undershoot during cooling is allowed within limited conditions to achieve the target room temperature. However, overshoot is not permitted at system startup.

- During cooling operation, the evaporating temperature may temporarily drop to 43°F (6°C), depending on conditions.
- During heating operation, the condensing temperature may temporarily rise to 115°F (46°C), depending on conditions.

Eco

Operates to minimize overshoot during heating and undershoot during cooling, aiming to maintain a stable temperature around the setpoint. While this mode helps reduce power consumption to a minimum, it may result in slower response to sudden changes in building load.

Room temperature evolution: Cooling

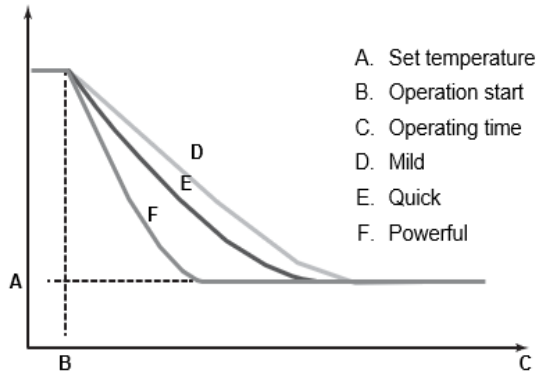

Room temperature evolution: Heating

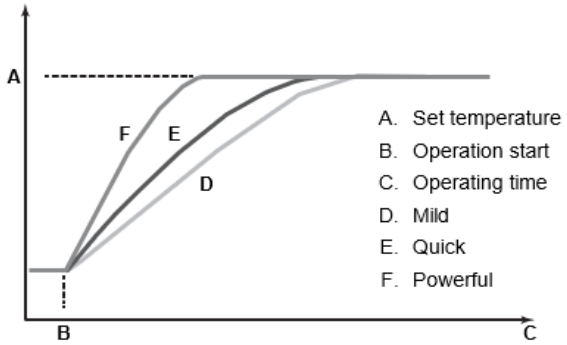

Please note that the diagram above is for reference only and does not guarantee actual system operation. The actual performance may vary depending on building load conditions and protective functions of the unit.

CONFIGURATION METHOD OF THE VARIOUS OPERATION

The following field settings are used to change the various operation.

Filter Cleaning Sign Setting

PCB [4-3]	RC [20-3]	Trigger of Filter Cleaning Sign
1(Default)		Timer
2		Dirty filter switch (If installed)
3		Either timer or switch
4		Function disabled

PCB [4-4]	RC [20-4]	Timer
1		500 hr
2		1000hr
3		1500hr
4(Default)		2000hr
5		2500hr
6		3000hr
7		3500hr
8		4000hr
9		4500hr
10		5000hr

To prevent performance issues or unit failure due to a dirty filter, a reminder for cleaning or replacement is displayed on the remote controller.
The trigger condition can be selected from timer, switch(if installed), or both.

- Timer: Sign appears when the indoor blower's accumulated operating time reaches the set value.
- Switch: Sign appears when the dirty filter switch is activated if it's installed.
- Both: Sign appears when either condition is met.

For response procedures, refer to the MAINTENANCE section.

Cooling / Heating Lockout Setpoint

Compressor and electric heater operation can be locked out when the outdoor temperature is too low during cooling or too high during heating.

PCB [2-40]	RC [4a-40]	Cooling Lockout Setpoint
0(Default)		Disabled
1 - 41		[Lockout Setpoint] = [Setting value] +19(°F) (20 - 60 °F)

PCB [2-39]	RC [4a-39]	Heating Lockout Setpoint
0 - 29 (Default:0)		[Lockout Setpoint] = 79 - [Setting value] (°F) (50 - 79 °F)

When the detected outdoor temperature falls below the setpoint during cooling or rises above the setpoint during heating, the system enters lockout and stops operation. Lockout is automatically released when the detected outdoor temperature rises 4°F above the setpoint during cooling or falls 4°F below the setpoint during heating.

During lockout, the blower operates according to the [Blower tap setting during thermo-off].In addition, the outdoor fan operates intermittently to ensure accurate outdoor temperature detection.

The [Lockout Setpoint] can also be configured via BACnet™.

[AW88] Cooling Lockout Setpoint
[AW90] Heating Lockout Setpoint

Between the field setting and the BACnet™ setting, the most recently updated value will be applied. For details, refer to the Submittal Data Sheet of BACnet™ Communication.

Optimum Start / Stop

This unit has Optimum start / stop function if BRC1NRV72 or newer is used as remote controller.

The optimum start function will start the unit operation prior to the scheduled occupancy time to ensure that the space/return temperature is close to the setpoint at the scheduled occupancy time. This is intended to reduce energy consumption by removing the need to set the time schedule to be occupied at a fixed time prior to actual expected occupancy. During optimum start operation, the unit operates to maintain the setpoint. The Economizer Damper will stay closed unless the Economizer cooling mode is active. The parameter [Maximum Optimum Start Time] should be set to a value equal to the typical fixed start-ahead time for the space (the time the system normally starts before occupancy).
The calculated start time considers the current Space Temperature, Setpoint, and the Outdoor Air Temperature.

The optimum stop function will stop Cooling, Heating and Dehumidification operation prior to the scheduled unoccupied time to reduce energy consumption.
The amount of time is calculated so that the Space Temperature remains in a [Comfortable range] until the scheduled unoccupied time. During this time, the blower operates according to the [Blower tap setting during thermo-off]. [Maximum Optimum Stop Time] is the earliest that the unit will be allowed to stop.
The calculated stop time considers the current Space Temperature, Setpoint, and the Outdoor Air Temperature.

Additionally, the unit improves the calculation by adjustment based on the evaluation of the difference between calculated start/stop time and actual time.

Refer to the operation manual of the remote controller for more detail. Below settings need to be input as field settings.

PCB [4-75]	RC [24-11]	Maximum optimum start time
1		15 minutes
2		30 minutes
3		45 minutes
4(Default)		60 minutes
5		75 minutes
6		90 minutes
7		105 minutes
8		120 minutes

PCB [4-77]	RC [24-13]	Maximum optimum stop time
1		5 minutes
2(Default)		10 minutes
3		15 minutes
4		20 minutes
5		25 minutes
6		30 minutes
7		35 minutes
8		40 minutes

PCB [4-78]	RC [24-14]	Comfortable range
1		1°F
2(Default)		2°F
3		3°F
4		4°F
5		5°F
6		6°F
7		7°F
8		8°F

[Comfortable range] is used to define the allowable space temperature during Optimum Stop. In cooling mode, the target temperature is set to Setpoint + [Comfortable range], and in heating mode, it is set to Setpoint - [Comfortable range]. The Optimum Stop time is calculated so that this target temperature is reached at the start of the scheduled unoccupied time. If the space temperature reaches this level during the Optimum Stop period, the unit will resume normal operation.

FIELD SETTINGS FOR VARIOUS ERROR / ALARMS

The following field settings are used to configure the alarm function.

CO2 Concentration Alarm Enable / Offset

When all the following conditions are met:

- [CO_2 Concentration Alarm Enable] is set to “Enable”
- [CO_2 Sensor Selection] is set to any option other than “None”
- No CO_2 Concentration Alarm (CH-07) is active and if the CO_2 concentration detected by the sensor remains higher than [CO_2 Setpoint] + [CO_2 Band] + [CO_2 Alarm Offset] for more than 10 minutes, a CO_2 concentration alarm will be triggered, and Alarm Code A0-21 will be displayed. This alarm will be cleared when the CO_2 concentration drops below the [CO_2 Setpoint].

PCB [6-27]	RC [41-11]	CO2 Concentration Alarm Enable	CO2 Concentration Alarm Offset
1(Default)		Disable	-
2		Enable	50ppm
3			100ppm
4			150ppm
5			200ppm
6			250ppm
7			300ppm
8			350ppm
9			400ppm
10			450ppm
11			500ppm
12			550ppm
13			600ppm
14			650ppm
15			700ppm

High SAT Alarm Setpoint / Operation / Release Differential

If the Supply Air Temperature Sensor detects a value above the [High SAT Alarm Setpoint] during heating, the unit operates based on the [High SAT Alarm Operation] setting:
"No Alarm": No action.
"Alarm + Thermo-off": Displays an alarm and enters Thermo-OFF. The alarm clears when the unit is turned off.
"Alarm + Continue Operation": Displays an alarm and continues operation. The alarm clears when the sensor reads below [High SAT Alarm Setpoint] − [High SAT Alarm Release Differential] for 30 consecutive seconds.
Alarm code is A0-22.

PCB [6-48]	RC [43-0]	High SAT Alarm Setpoint
1		140°F
2		145°F
3		150°F
4		155°F
5		160°F
6		165°F
7		170°F
8(Default)		175°F
9		180°F
10		185°F
11		190°F
12		195°F
13		200°F

PCB [6-49]	RC [43-1]	High SAT Alarm Operation	High SAT Alarm Release Differential
1(Default)		No Alarm	-
2		Alarm + Thermo-Off	-
3		Alarm + Continue Operation	5°F
4			10°F
5			15°F
6			20°F
7			25°F
8			30°F
9			35°F
10			40°F
11			45°F

Low SAT Alarm Setpoint / Operation / Release Differential

If the Supply Air Temperature Sensor detects a value below the [Low SAT Alarm Setpoint] during cooling, the unit operates based on the [Low SAT Alarm Operation] setting:
"No Alarm": No action.
"Alarm + Continue Operation": Displays an alarm and continues operation. The alarm clears when the sensor reads above [Low SAT Alarm Setpoint] + [Low SAT Alarm Release Differential] for 60 continuous seconds. Alarm code is A0-23.

PCB [6-50]	RC [43-2]	Low SAT Alarm Setpoint
1		40°F
2		36°F
3(Default)		32°F
4		28°F
5		24°F
6		20°F

PCB [6-51]	RC [43-3]	Low SAT Alarm Operation	Low SAT Alarm Release Differential
1(Default)		No Alarm	-
2		Alarm + Continue Operation	2°F
3			4°F
4			6°F
5			8°F
6			10°F
7			12°F
8			14°F
9			16°F
10			18°F

High Humidity Alarm Setpoint / Delay Timer / Release Differential

If the indoor humidity sensor detects a value above the [High Humidity Alarm Setpoint] for [High Humidity Alarm Delay Timer] continuous minutes (see the table below), High Humidity Alarm(A0-24) will be displayed. The alarm clears when the sensor reads below [High Humidity Alarm Setpoint] - [High Humidity Alarm Release Differential] for 30 continuous seconds.

PCB [6-52]	RC [43-4]	High Humidity Alarm Setpoint
1(Default)		100%
2		90%
3		85%
4		80%
5		75%
6		70%
7		65%
8		60%
9		55%

PCB [6-53]	RC [43-5]	High Humidity Alarm Delay Timer
1		10minutes
2		20minutes
3		30minutes
4		40minutes
5		50minutes
6(Default)		60minutes
7		70minutes
8		80minutes
9		90minutes

PCB [6-54]	RC [43-6]	High Humidity Alarm Release Differential
1		5%
2 (Default)		10%
3		15%
4		20%
5		25%

IAT Alarm Enable / Offset / Delay Timer

If the indoor temperature deviates from the setpoint on the remote controller for a certain period, the system triggers an Indoor Temperature Alarm and displays Error Code A0-25 unless [IAT Alarm Enable] is set to "Disable".

The alarm activates when the indoor temperature stays outside the following threshold range for a duration set by [IAT Alarm Delay Timer]:

- **Cooling Mode:** Above Setpoint + [IAT Alarm Offset] (°F)
- **Heating Mode:** Below Setpoint − [IAT Alarm Offset] (°F)

The alarm is cleared when the indoor temperature returns to within either of the following recovery conditions and remains stable for 1 minute:

- **Cooling Mode:** Below Setpoint + 2°F or Below Setpoint + [IAT Alarm Offset] − 4°F
- **Heating Mode:** Above Setpoint − 2°F or Above Setpoint − [IAT Alarm Offset] + 4°F

PCB [6-55]	RC [43-7]	IAT Alarm Enable	IAT Alarm Offset
1(Default)		Disable	-
2		Enable	4°F
3			6°F
4			8°F
5			10°F
6			12°F
7			14°F
8			16°F
9			18°F
10			20°F
11			22°F
12			24°F
13			26°F
14			28°F
15			30°F

PCB [6-56]	RC [43-8]	IAT Alarm Delay Timer
1		10minutes
2		20minutes
3		30minutes
4		40minutes
5		50minutes
6 (Default)		60minutes
7		70minutes
8		80minutes
9		90minutes

External ON/OFF Setting

PCB [4-33]	RC [22-1]	External ON/OFF Input
1(Default)		Forced OFF
2		ON/OFF Operation
3		System/Equipment Protection

When [Forced OFF] is selected, the unit will be forcibly stopped by connecting the EXTERNAL ON/OFF terminals (A8P-X5M). This forced stop takes the highest priority and will override any required Mitigation Action from the RDS.

When [ON/OFF Operation] is selected, connecting the EXTERNAL ON/OFF terminals (A8P-X5M) will turn the operation ON, and releasing the connection will turn it OFF. This ON/OFF operation is equivalent to the ON/OFF control from the remote controller. Whether the compressor operates depends on the setpoint and the status of the unit.

When [System/Equipment Protection] is selected, connecting the EXTERNAL ON/OFF terminals (A8P-X5M) enables the unit to be operable. If the terminals are released while the unit is ON, the unit will enter an error state and display Error Code A0-00. In this mode, Mitigation Actions from the RDS take priority.

CONFIGURATION METHOD OF THE ELECTRIC HEAT OPERATION

The following field settings are used to change the additional electric heat accessory operation.

Electric Heat Stage

PCB 4-22]	RC [21-6]	Electric Heat Stage
1 (Default)		None
4		1 stage
5		2 stage

Select the appropriate heater type in the above settings, as unit operation varies depending on the stage of the heater.

Heating Type / Heating Operation During Defrost

PCB [4-19]	RC [21-3]	Heating Type	Heat Operation During Defrost
1 (Default)		Backup	Prohibited
2		Auxiliary	Prohibited
3		Backup	Permitted
4		Auxiliary	Permitted

If the [Heating Type] is set to “Backup”, the electric heat will be energized only during Heat Pump Lockout, as described later. If “Auxiliary” is selected, the electric heat will be energized not only during Heat Pump Lockout, but also when the heat pump’s heating capacity is insufficient.
If the [Heat Operation During Defrost] setting is “Prohibited”, the electric heat will not be energized during defrost. If set to ‘Permitted’, the electric heat will be energized during defrost when the unit is thermo-ON.

Heat Pump Lockout

When [Heat pump Lockout] is “enable” and the outdoor temperature sensor, located next to the outdoor control box, detects a temperature below the Heat Pump Lockout Setpoint, the system enters Heat Pump Lockout mode. As previously described, during Heating Thermo-ON, only the electric heater operates in this mode.
Heat Pump Lockout will be cleared when the outdoor temperature rises above the Heat Pump Lockout Setpoint + Heat Pump Lockout Differential.

Electric Heat Lockout

When the outdoor temperature sensor, located next to the outdoor control box, detects a temperature above Electric Heat Lockout Setpoint + Electric Heat Lockout Differential, the system enters Electric Heat Lockout mode. Electric heat will not be energized in this mode. Electric Heat Lockout will be cleared when the outdoor temperature drops below the Electric Heat Lockout Setpoint.
Electric Heat Lockout Setpoint + Electric Heat Lockout Differential must be higher than Heat Pump Lockout Setpoint.

Heat Pump Lockout Enable

PCB [2-37]	RC [4a-37]	Heat Pump Lockout
0 (Default)		Disabled
1		Enabled

Heat Pump Lockout Setpoint / Heat Pump Lockout Differential

PCB [2-78]	RC [4a-78]	Heat Pump Lockout Temperature
0(Default) - 65		[Lockout Setpoint] = [Setting value] -15(°F) (-15 – 50 °F)
66		Forced Lockout

PCB [2-79]	RC [4a-79]	Heat Pump Lockout Differential
0		5°F
1 (Default)		10°F
2		15°F

The [Lockout Setpoint] can also be configured via BACnet™.
[AW89] Heat Pump Lockout Setpoint
Between the field setting and the BACnet™ setting, the most recently updated value will be applied. For details, refer to the Submittal Data Sheet of BACnet™ Communication.

Electric Heat Lockout Temperature / Electric Heat Lockout Differential

PCB [2-97]	RC [4a-97]	Electric Heat Lockout Setpoint
0		0°F
1		5°F
2		10°F
3		15°F
4		20°F
5		25°F
6		30°F
7(Default)		35°F
8		40°F
9		45°F
10		50°F
11		55°F
12		60°F
13		65°F
14		Forced Lockout
15		No Lockout

PCB [2-98]	RC [4a-98]	Electric Heat Lockout Differential
0		5°F
1 (Default)		10°F
2		15°F

Automatic Backup

When [Heat Pump lockout] is set to “Enable,” the auto backup function will automatically be set. This will allow the auxiliary or secondary heat source to be automatically energized in the event of a system failure.
Error codes capable of auto backup are listed in the table below. Please be aware that the error codes that are not listed do not auto backup in order to protect the unit.

Error contents	Error code (Auto backup possible)
Actuation of high pressure switch	E3
Actuation of low pressure sensor	E4
Inv. compressor motor lock	E5
Compressor damage alarm	E6
Outdoor fan motor abnormality	E7
Electronic expansion valve coil abnormality	E9
Harness abnormality (between outdoor unit main PCB and inverter PCB)	H3
Position signal abnormality of outdoor fan motor	H7
Outdoor air thermistor abnormality	H9
Discharge pipe temperature abnormality	F3
Flood back alarm	F4
Discharge pipe thermistor and compressor surface thermistor abnormality	J3
Suction pipe thermistor abnormality	J5
Outdoor coil deicer thermistor and outdoor coil gas pipe thermistor abnormality	J6
Liquid pipe thermistor and plate heat exchanger inlet pipe thermistor abnormality	J7
Outdoor coil liquid pipe thermistor abnormality	J8
Plate heat exchanger outlet pipe thermistor abnormality	J9
High pressure sensor abnormality	JA
Low pressure sensor abnormality	JC
Inverter PCB abnormality	L1
Reactor temperature rise abnormality	L3
Inverter radiation fin temperature rise abnormality	L4
Inv. compressor instantaneous overcurrent	L5
Inv. compressor overcurrent	L8
Inv. compressor startup abnormality	L9
Transmission error between inverter and control PCB	LC

CONFIGURATION METHOD OF THE VENTILATION DAMPER OPERATION

There are two main types of motorized ventilation dampers available as optional accessories for this unit: a 2-position motorized damper, which opens to a fixed position, and a variable economizer damper. By connecting the wiring connector to A8P-X20A and configuring the field settings as described below, the damper operation can be adjusted to suit the installation environment.

Damper presence / Damper type / Economizer Cooling Trigger Setting

When connecting a motorized damper, set [Damper presence] to YES. Select the appropriate [Damper type] according to the damper being used to ensure proper operation. Details regarding [Economizer cooling trigger] setting will be explained later.

PCB [6-16]	RC [41-0]	Damper presence	Damper type	Economizer cooling Trigger
1(Default)		NO	-	-
2		YES	2-Position motorized damper	-
3			Economizer damper	Always disabled
4				Fixed Dry bulb
5				Differential Dry bulb
6				Fixed Enthalpy
7				Differential Enthalpy

Damper will be energized to open when [Damper presence] = YES, indoor blower is running, and Ventilation Lockout = OFF.
For information about Ventilation Lockout, please refer to the later section of this manual.

Economizer Operation

When the [Damper type] is set to "Economizer" and the damper is open, the unit performs one of the following three main operations:

- Fixed Minimum Position
  Maintains the damper at the specified minimum open position.
- Demand Control Ventilation (DCV)
  Adjusts damper opening based on CO_2 concentration to prevent excessive ventilation.
- Economizer Cooling
  Increases the intake of outdoor air by opening the damper when the outdoor temperature or enthalpy is sufficiently low for cooling, thereby reducing compressor power consumption.

Details of each mode's operation and setting methods are described below.

Low/High Limit Position Setting

The damper position determined by the following three modes can be restricted using upper and lower limit values. If the calculated damper position exceeds the High limit position, it will be capped at the High limit position. If it falls below the Low limit position, it will be set to the Low limit position.

PCB [6-23]	RC [41-7]	High Limit Position
1(Default)		100%
2		90%
3		80%
4		70%
5		60%
6		50%
7		40%
8		30%
9		20%
10		10%

PCB [6-22]	RC [41-6]	Low Limit Position
1(Default)		0%
2		2%
3		4%
4		6%
5		8%
6		10%

Fixed Minimum Position Operation

The damper will open to the Minimum position under the following conditions:

- [Damper presence] is set to YES
- The indoor blower is operating
- Not in Ventilation lockout, DCV, Economizer cooling, or Optimum start mode

The Minimum position can be configured individually for each blower tap. For the Medium and Low blower taps, the Minimum position can be configured by selecting either:

- Automatic calculation, or
- Manual setting based on an offset from the Minimum position of a higher airflow tap.

This selection allows the system to be adapted to site-specific ventilation requirements. The automatic calculation estimates the required damper opening to maintain the same ventilation airflow as the High tap, by considering the relative airflow ratio. However, depending on the actual duct installation at the site, the calculated values may not result in the intended airflow. In such cases, please use a manual setting instead of automatic calculation.

Minimum Position Setting

PCB [6-19]	RC [41-3]	High Tap Minimum Position (HMP)
1		5%
2		10%
3		15%
4(Default)		20%
5		25%
6		30%
7		35%
8		40%
9		45%
10		50%
11		55%
12		60%
13		65%
14		70%
15		BACnet [AV42]

PCB [6-20]	RC [41-4]	Medium Tap Minimum Position (MMP)
1(Default)		Calculation
2		HMP+5%
3		HMP+10%
4		HMP+15%
5		HMP+20%
6		HMP+25%
7		HMP+30%
8		HMP+35%
9		HMP+40%
10		HMP+45%
11		HMP+50%
12		HMP+55%
13		HMP+60%
14		HMP+65%
15		BACnet [AV43]

PCB [6-21]	RC [41-5]	Low Tap Minimum Position (LMP)
1(Default)		Calculation
2		MMP+5%
3		MMP+10%
4		MMP+15%
5		MMP+20%
6		MMP+25%
7		MMP+30%
8		MMP+35%
9		MMP+40%
10		MMP+45%
11		MMP+50%
12		MMP+55%
13		MMP+60%
14		MMP+65%
15		BACnet [AV44]

When BACnet™ is selected, the value transmitted via BACnet™ is used. For details, refer to the Submittal Data Sheet of BACnet™ communication.

Demand Control Ventilation (DCV)

In DCV mode, when the CO_2 concentration is low, the damper position can be reduced below the Minimum position, thereby decreasing ventilation load.

DCV will be enabled under the following conditions:

- [Damper type] is set to 'Economizer'
- The indoor blower is operating
- [CO2 Sensor] is set to other than 'None'
- Not in Ventilation lockout, Economizer cooling, Optimum start mode or CO2 sensor error

The damper position control in DCV mode can be defined using the following three settings:

- DCV Ratio

Defines how much the damper can close relative to the Minimum position when DCV is active. The actual damper position (referred to as Minimum DCV) is calculated as: Minimum Position of the current blower tap × DCV Ratio

- CO_2 Setpoint
  When the CO_2 concentration is below this value, the damper position will be held at Minimum DCV.
- CO_2 Band
  When the CO_2 concentration exceeds CO_2 Setpoint + CO_2 Band, the damper position returns to the Minimum position. If the CO_2 concentration is between the CO_2 Setpoint and CO_2 Setpoint + CO_2 Band, the damper position is adjusted linearly between Minimum DCV and Minimum Position.

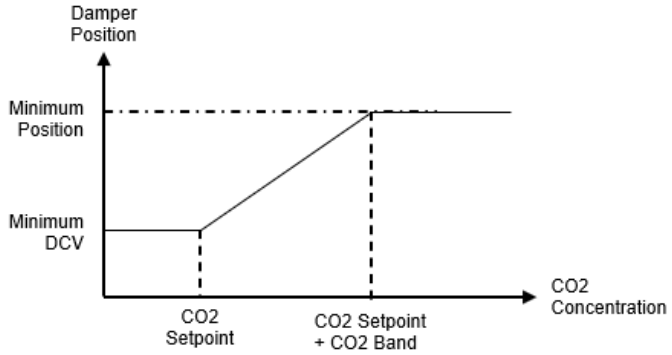

DCV Settings

PCB [6-24]	RC [41-8]	CO2 Setpoint (ppm)
1		300
2		400
3		500
4(Default)		600
5		700
6		800
7		900
8		1000
9		1100
10		1200
11		1300
12		1400
13		1500
14		1600
15		BACnet [AV34]

PCB [6-25]	RC [41-9]	CO2 Band (ppm)
1		50
2		100
3		150
4		200
5		250
6		300
7		350
8(Default)		400
9		450
10		500
11		550
12		600
13		650
14		700
15		BACnet [AV35]

PCB [6-26]	RC [41-10]	DCV ratio
1		0%
2		5%
3		10%
4		15%
5		20%
6(Default)		25%
7		30%
8		35%
9		40%
10		45%
11		50%
12		55%
13		60%
14		65%
15		70%

When BACnet™ is selected, the value transmitted via BACnet™ is used. For details, refer to the Submittal Data Sheet of BACnet™ communication.

Economizer Cooling Operation

Economizer cooling, which utilizes outdoor air as a cooling source, will be initiated when all the following conditions are met:

- [Damper type] is set to 'Economizer'
- [Economizer Cooling Trigger] is not 'Always disabled'
- Cooling Thermo-on
- Not in Ventilation lockout, Dehumidification mode or Outdoor air temperature sensor error
- Economizer Cooling Enable is TRUE.

When using economizer cooling, if the sensor located inside the return duct is used as the indoor temperature sensor, the actual indoor air temperature may not be accurately detected when the economizer damper is fully open. It is recommended to use either the space temperature sensor or the sensor built into the remote controller. For details on selecting the indoor temperature sensor, refer to the previous section INDOOR TEMPERATURE SELECTION.

The conditions for Economizer Cooling Enable to become TRUE depend on the selected Economizer Cooling Trigger, as described earlier in this manual.

When Economizer Cooling Trigger is 'Fixed Dry Bulb':

- Economizer Cooling Enable becomes TRUE when the outdoor air temperature is 1°F lower than the Fixed Dry Bulb Setpoint.
- It becomes FALSE when the outdoor air temperature is 1°F higher than the Fixed Dry Bulb Setpoint.

When Economizer Cooling Trigger is 'Differential Dry Bulb':

- Economizer Cooling Enable becomes TRUE when the outdoor air temperature is lower than the indoor air temperature by at least the Differential Dry Bulb Setpoint.
- It becomes FALSE when the outdoor air temperature is higher than the indoor air temperature.

When Economizer Cooling Trigger is 'Fixed Enthalpy':
Economizer Cooling Enable becomes TRUE when:

- The outdoor air temperature is 1°F lower than the Fixed Dry Bulb Setpoint, and
- The outdoor air enthalpy is 0.5 Btu/lb lower than the Fixed Enthalpy Setpoint.

It becomes FALSE when:

- The outdoor air temperature is 1°F higher than the Fixed Dry Bulb Setpoint, or
- The outdoor air enthalpy is 0.5 Btu/lb higher than the Fixed Enthalpy Setpoint.

Additionally, if there is an error with the outdoor humidity sensor used for enthalpy calculation, Economizer Cooling Enable will be set to FALSE.

When Economizer Cooling Trigger is 'Differential Enthalpy':
Economizer Cooling Enable becomes TRUE when:

- The outdoor air temperature is 1°F lower than the Fixed Dry Bulb Setpoint, and
- The outdoor air enthalpy is lower than the indoor enthalpy by at least the Differential Enthalpy Setpoint.

It becomes FALSE when:

- The outdoor air temperature is 1°F higher than the Fixed Dry Bulb Setpoint, or
- The outdoor air enthalpy is higher than the indoor enthalpy.

If there is an error with either the outdoor or indoor humidity sensor used for enthalpy calculation, Economizer Cooling Enable will also be set to FALSE.

Fixed /Differential Dry Bulb Setpoint

PCB [6-17]	RC [41-1]	*Fixed Dry Bulb Setpoint*	*Differential Dry Bulb Setpoint*
1		60F	2.0F
2		61F	2.5F
3		62F	3.0F
4		63F	3.5F
5(Default)		64F	4.0F
6		65F	4.5F
7		66F	5.0F
8		67F	5.5F
9		68F	6.0F
10		69F	6.5F
11		70F	7.0F
12		71F	7.5F
13		72F	8.0F
14		73F	8.5F
15		BACnet [AV38]	BACnet [AV39]

Fixed /Differential Enthalpy Setpoint

PCB [6-18]	RC [41-2]	*Fixed Enthalpy Setpoint*	*Differential Enthalpy Setpoint*
1		25.2Btu/lb	0.5Btu/lb
2		25.4Btu/lb	1.0Btu/lb
3		25.6Btu/lb	1.5Btu/lb
4		25.8Btu/lb	2.0Btu/lb
5		26.0Btu/lb	2.5Btu/lb
6		26.2Btu/lb	3.0Btu/lb
7		26.4Btu/lb	3.5Btu/lb
8(Default)		26.6Btu/lb	4.0Btu/lb
9		26.8Btu/lb	4.5Btu/lb
10		27.0Btu/lb	5.0Btu/lb
11		27.2Btu/lb	5.5Btu/lb
12		27.4Btu/lb	6.0Btu/lb
13		27.6Btu/lb	6.5Btu/lb
14		27.8Btu/lb	7.0Btu/lb
15		BACnet [AV40]	BACnet [AV41]

When BACnet™ is selected, the value transmitted via BACnet™ is used. For details, refer to the Submittal Data Sheet of BACnet™ communication.

Ventilation Lockout

A lockout function is provided to close the ventilation damper under outdoor temperature conditions that would significantly increase the ventilation load or cause operation outside the operation range—such as heating under low outdoor temperatures or cooling under high outdoor temperatures.
During cooling, the ventilation lockout becomes active when the outdoor air temperature rises above the Cooling Ventilation Lockout Setpoint. It is deactivated when the temperature drops to 4°F below the setpoint.
During heating, the ventilation lockout becomes active when the outdoor air temperature falls below the Heating Ventilation Lockout Setpoint. It is deactivated when the temperature rises to 4°F above the setpoint.

Ventilation Lockout Settings

PCB [6-28]	RC [41-12]	*Cooling Ventilation Lockout Setpoint*
1(Default)		Disabled
2		125
3		120
4		110
5		105
6		100
7		95
8		90
9		85
10		80
11		75
12		70

PCB [6-29]	RC [41-13]	*Heating Ventilation Lockout Setpoint*
1(Default)		Disabled
2		-10
3		-5
4		0
5		5
6		10
7		15
8		20
9		25
10		30
11		35
12		40
13		45
14		50
15		60

Power Exhaust Activate Condition

PCB [6-31]	RC [41-15]	Power Exhaust Activation Condition
1 (Default)		None
2		During Economizer Cooling
3		During Minimum Position or Higher
4		Always

Power Exhaust Operation

Power Exhaust prevents an increase in building static pressure caused by the intake of outdoor air during economizer operation by exhausting a portion of the return air to the outside.
The operating conditions of Power Exhaust can be configured using [Power Exhaust Activation Condition] setting.
'None': Power Exhaust does not operate.
'Economizer Cooling': It operates only during economizer cooling.
'Minimum Position': It operates when the damper position is at or above the minimum position.
'Always': Power Exhaust operates whenever the damper is open.

CONFIGURATION METHOD OF THE HOT GAS REHEAT OPERATION

When the unit is a hot gas reheat system, it can dehumidify the air without lowering the set temperature by reheating the cooled air as needed, based on the set humidity and set temperature. This reduces the sensible heat ratio.

The Dehumidification Mode is not selectable on the remote controller. Instead, when the unit is operating in Cool mode, the system automatically switches between Dehumidification Mode and regular Cooling Mode based on the temperature Setpoint and Humidity Setpoint. In Dehumidification Mode, the compressor frequency is adjusted based on the actual humidity and the humidity setpoint while the reheat capacity is controlled based on the actual room temperature and the temperature setpoint.

Operation Mode Schematic

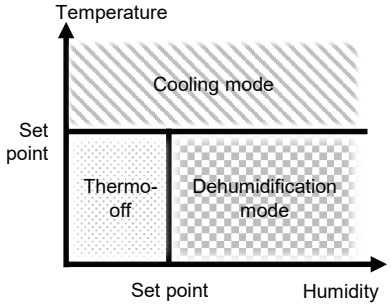

Humidity Setpoint

PCB [6-42]	RC [42-10]	Humidity Setpoint
1		40%
2		45%
3		50%
4		55%
5		60%
6		65%
7		70%
8		75%
9 (Default)		Remote controller
10		BACnet™ [AV33]

If the remote controller is equipped with a Humidity Setpoint function, use it to set the target humidity. If not, it can be set via the field setting described above. For detailed instructions on how to set from the remote controller, refer to the remote controller's operation manual. Also, Setpoint transmitted via BACnet™ can be used. For details, refer to the Submittal Data Sheet of BACnet™ communication.

Reheat Capacity Adjustment

The unit controls the reheat coil capacity based on the supply air temperature and the target value. When [SA Adjustment Setting] is set to '1', the unit automatically adjusts the supply air temperature with the SA Setpoint as the lower limit to maintain the room temperature at the indoor air temperature setpoint specified on the remote controller. When set to '2', the unit always uses the SA Setpoint as the target supply air temperature. However, when TEMPERATURE CONTROL OBJECT is set to "DAT" in the Multi Zone VAV Configuration described later, the value of SUPPLY AIR SETPOINT (COOLING) will be used as the SA Setpoint.

PCB [6-40]	RC [42-8]	SA Adjustment
1 (Default)		Auto
2		Fixed

PCB [6-43]	RC [42-11]	SA Setpoint
1		54°F
2		55°F
3		57°F
4		59°F
5		61°F
6		63°F
7		64°F
8		66°F
9 (Default)		68°F
10		70°F
11		72°F
12		73°F
13		75°F
14		77°F
15		79°F

CONFIGURATION METHOD OF MULTIZONE VAV

Units shipped as Multizone-VAV model supports blower control to maintain constant static pressure in the supply duct, provided that the required devices are installed and necessary settings are configured. This functionality enables support for multizone VAV systems.

System Requirements

Static Pressure Sensor (to be procured locally)

A duct static sensor is required to detect the static pressure in the supply duct. The blower speed is adjusted based on the sensor reading and the static pressure setpoint. Refer to the specifications below for recommended sensor characteristics. Prepare and install the sensor accordingly.

Recommended Static Pressure Sensor Spec

Supply voltage	24VAC(+/-10%)
Output signal	0-10VDC
Response time	4 seconds or faster
Output Update Rate	0.5sec intervals
Pressure range	2.5"
Bi/Uni Directional	Uni
Accuracy	+/- 0.5% FSO or better
Thermal Effect	+/- 0.067% FSO/°F or better

The recommended sensor is the A/DLP-2D5-W-U-N-A-0-C.

Refer to Appendix E and choose a sensor that meets the requirements of the Input/Output Specification.

High Duct Static Switch (to be procured locally)

A switch is required to stop the unit when the static pressure in the supply duct exceeds a certain threshold. Refer to the specifications below for required switch characteristics. Prepare and install the switch accordingly.

Recommended High Duct Static Switch Spec

Set Point	≥ +1.0" above set static pressure ≤ duct design pressure
Reset	Automatic Reset

Refer to Appendix E and choose a switch that meets the requirements of the Input/Output Specification.

VAV Box / Zoning Damper

This unit is not designed to control VAV boxes or zoning dampers. It is the responsibility of the system designer or installer to select and configure VAV boxes or zoning dampers such that the required airflow to each conditioned space is maintained when the duct static pressure reaches the setpoint configured on this unit.

NOTE: In the event that an A2L refrigerant leak is detected by the RDS, all zoning dampers must be fully opened based on the alarm output signal provided from terminal X4M on connector A8P, located within the indoor control box of this unit.

External ON/OFF Request Signal

In systems utilizing multizone VAV control, the unit does not follow usual thermo-ON/OFF control. Instead, unit operation is governed by an external on/off request signal. To initiate unit operation, the unit need to be commanded ON and an appropriate control signal must be input to terminal X6M on connector A8P, located within the indoor control box.

Restrictions

- When operating in a Multizone VAV system, the use of the accessory electric heater is not permitted. This is due to the potential inability to maintain the minimum airflow required for surface temperature protection of the heater.
- After the external ON/OFF request signal is turned OFF, the unit may perform a shutdown sequence for up to 30 minutes for unit protection purposes. **NOTE: During this period, do not close all zoning dampers. Operate the VAV boxes or zoning dampers accordingly to maintain the minimum system airflow, as specified later in this document.**
- Due to rapid changes in damper positions or similar system behavior, duct static pressure may temporarily rise up to 1” above the setpoint. Therefore, the High Duct Static pressure limit should be set to at least 1” higher than the Static Pressure Setpoint.

Minimum CFM

The total air flow volume must be higher than Minimum CFM shown below.

Tonnage	Model	Minimum CFM
10ton	DVH120	720
8.5ton	DVH102	620
7.5ton	DVH090	590

Indoor Blower Operation Sequence

When the unit is configured as Multizone-VAV, and the unit receives an ON command as well as External on/off request signal, the unit operates as a Multizone VAV system. Under this condition, the blower output is modulated to maintain duct static pressure at the configured Static Pressure Setpoint.

Static Pressure Setpoint

PCB [6-32]	RC [42-0]	Static Pressure Setpoint
2		0.8”
3		0.9”
4		1.0”
5		1.1”
6		1.2”
7		1.3”
8		1.4”
9		1.5”
10		1.6”
11		1.7”
12		1.8”
13		1.9”
14		2.0”
15		BACnet™[AV45]

When BACnet™ is selected, the value transmitted via BACnet™ is used. For details, refer to the Submittal Data Sheet of BACnet™ Communication. If below 0.2” is set via BACnet™, the unit will be suspended, and an error code will be displayed on the remote controller.

Compressor Operation Sequence

When “IAT” is selected as [Temperature Control Object], the unit is controlled so that the temperature selected in [Indoor Temperature Selection] becomes the set temperature on the remote controller.
When “SAT” is selected, the unit is controlled so that the supply air temperature sensor connected to A8P-X17A becomes Supply Air Setpoint. If Supply Air Setpoint is set to “Same as cooling,” the operation mode “Auto” can be selected on the remote controller, allowing the system to automatically switch between cooling and heating cycles according to the conditions.

NOTE: When SAT is selected, the setpoint displayed on the controller is not the Supply Air Setpoint. To view or change the Supply Air Setpoint, use the field settings described below.

Temperature Control Object

PCB [6-33]	RC [42-1]	Temperature Control Object (Multizone VAV)
1 (Default)		IAT
2		SAT

Supply Air Setpoint (Cooling / Heating)

PCB [6-34]	RC [42-2]	Supply Air Setpoint (Cooling)
1		50
2		51
3		52
4		53
5		54
6		55
7		56
8 (Default)		57
9		58
10		59
11		60
12		61
13		62
14		63
15		BACnet™[AV36]

PCB [6-35]	RC [42-3]	Supply Air Setpoint (Heating)
1 (Default)		Same as cooling
2		76
3		78
4		80
5		82
6		84
7		86
8		88
9		90
10		92
11		94
12		96
13		98
14		100
15		BACnet™[AV37]

When BACnet™ is selected, the value transmitted via BACnet™ is used. For details, refer to the Submittal Data Sheet of BACnet™ Communication.

AIR FLOW ADJUSTMENTS

When the final adjustments are complete, the current draw of the motor should be checked and compared to the full load current rating of the motor. The amperage must not exceed the service factor stamped on the motor nameplate. The total airflow must not be less than that required for operation of the electric heater. Refer to Appendix D.

If an economizer is installed, check the unit operating balance with the economizer at full outside air and at minimum outside air.

NOTE: Never run high tap CFM below 300 CFM per ton unless the unit is configured as VAV system, evaporator freezing or poor unit performance is possible.

Adjust the CFM for the unit by selecting blower speed % via BRC remote controller or field setting. Refer to Appendix A for blower performance at each blower speed %.

Setting via BRC remote controller

Refer Installation manual of BRC controller.

Setting via field setting

A percentage value can be set in the format XX.X% using the three field setting parameters. For input methods for field settings, refer to the previous section titled [Blower Speed Setting].

BLOWER TAP SELECTION

This unit has three blower tap selections, High, Medium and Low tap. The blower speed % selected above is the CFM at High tap, while the blower speed at medium and low tap is calculated automatically. Refer Operation manual of remote controller for three fan speed selection. However, when the electric heater is operating, Medium and Low taps cannot be selected.

When Blower speed is set to 'Auto', the system automatically selects the optimal blower tap based on the required capacity, reducing power consumption for energy-saving operation.

When operating as multizone VAV system, 'Auto' is the only selectable option for Blower speed.

Electrical Input Check

Make preliminary check of evaporator fan ampere draw and verify that motor nameplate amps are not exceeded. A final check of amp draw should be made upon completion of air balancing of the duct system (see Appendix B).

OPERATIONAL VERIFICATION

After installation and once the field settings are defined, the installer is obliged to verify correct operation. Therefore, a operational verification must be performed according to the procedures described below.

Precautions before starting the verification

During the operational verification, the units will start up:

- Make sure that the preparations are finished (duct work, electrical wiring, drain connection, etc.).

CAUTION

Do not insert fingers, rods or other objects into the air inlet or outlet. When the fan is rotating at high speed, it will cause injury.

CAUTION

Do not perform the operational verification while working on the preparation. When performing the operational verification, not only the units, but the connected equipment or accessories will operate as well. Working on equipment or accessories while performing a test operation is dangerous.

CAUTION

- **During tests never pressurize the unit with a pressure higher than the maximum allowable pressure (as indicated on the nameplate of the unit).**
- **If refrigerant gas leaks, ventilate the area immediately. Toxic gas may be produced if it comes into contact with fire.**
- **Never directly touch any accidental leaking refrigerant. This could result in severe wounds caused by frostbite.**

- Provide a logbook and machine card.

In accordance with the applicable code, it may be necessary to provide a logbook with the equipment containing at least: information on maintenance, repair work, results of tests, stand-by periods, etc.

NOTE: During the first running period of the unit (break in period for compressor), required power input may be higher. This phenomenon originates from the compressor that requires a 20 hour run elapse before reaching smooth operation and stable power consumption. Reason is that the scroll is made out of iron and that it takes some time to smooth the surfaces that make contact.

NOTE: To protect the compressor, be sure to turn on the power supply 6 hours before starting operation.

Start-Up Procedure

Turn on the electrical supply at the disconnect and wait until the unit is ready for operation. Please refer to 'COMMISSIONING' on how to confirm the status. Refer to Operation manual of remote controller for how to change On/Off status, operation mode, Setpoint and Fan speed.

Fan Mode

1. Set the operation mode to 'Fan' and start the operation. The blower should operate at selected fan speed.
2. Turn the unit off. The blower should stop immediately.

Cooling Mode

1. Set the operation mode to 'Cool', set the Setpoint lower than room temperature and start the operation. The blower, outdoor fan(s), and the compressor(s) should now be operating. Allow the unit to run 10 minutes, make sure cool air is being supplied by the unit. Check compressor rotation by verifying pressure difference between suction and discharge.
2. Turn the unit off. The indoor blower, the compressor(s) and outdoor fan(s) will continue to run for a maximum of 30 minutes to protect the unit.

Heating Mode

1. Set the operation mode to 'Heat', set the Setpoint higher than room temperature and start the operation. The outdoor fan(s) and the compressor(s) should now be running.
2. The blower starts operating after the hot start is completed to prevent cold air from being discharged during heating operation. During the hot start, "STANDBY" is displayed on the controller.
3. With the reversing valve in the de-energized (heating) position. After giving the unit time to settle out, make sure the unit is supplying heated air.
4. If the outdoor ambient is above Heating lock out Setpoint (79 °F for default), the unit will be suspended to prevent high pressure cut out when on heating. The compressor should stop. The heating cycle must be thoroughly checked, so postpone the test to another day when conditions are more suitable but DO NOT FAIL TO TEST.
5. If unit operates properly in the heating cycle, raise the temperature setting until the supplemental resistance heat comes on if installed. Make sure it operates properly.
6. If checking the unit in the wintertime, when the outdoor coil is cold enough to actuate the defrost control, observe at least one defrost cycle to make sure the unit defrosts completely.
7. Turn the unit off. The indoor blower, the compressor(s) and outdoor fan(s) will continue to run for a maximum of 30 minutes to protect the unit.

Turn the unit off and disconnect all power and lock out / tag out when servicing the unit.

WARNING

HIGH VOLTAGE!
Disconnect all power and lock out / tag out before servicing or installing this unit. Multiple power sources may be present. Failure to do so may cause property damage, personal injury or death.

Error Code Check

During operation, check the user interface or the outdoor control box segment display to confirm that no error codes are shown. In case an error code is displayed, perform correcting actions as explained in the error code table. Carry out the test operation again and confirm that the abnormality is properly corrected.

Error Code List

In case of a displayed error code, perform correcting actions as explained in the error code table.
After correcting the abnormality, press BS3 to reset the error code and retry operation.

The error code which is displayed on the outdoor control box will indicate a main error code and a sub code. The sub code indicates more detailed information about the error code. The error code will be displayed intermittent.

EXAMPLE:

Main Code — Sub Code

E3- 01

With an interval of 1 second, the display will switch between main code and sub code.

The error code is also displayed on the user interface, like BRC remote controller. For details on the verification method, refer to the remote controller manual. Below is an example display for a BRC controller.

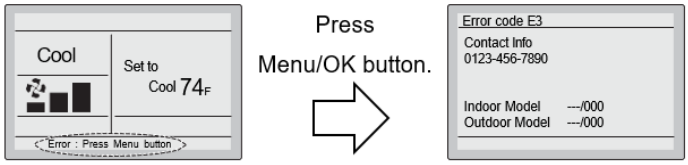

If an error occurs, either one of the following items will flash in the basic screen.

"Error: Press Menu button"
The operation lamp will flash.

"Warning: Press Menu button"
The operation lamp will not flash.

D-Checker Tool Part # 999482P3 is required to verify system operation and troubleshooting the refrigeration system.

ERROR CODES LIST

Error Code		Contents	Solutions
Main Code	Sub code Master/sub 1		
A0	00	Forced cut-off by external protection when in use (A8P – X5M)	If in use, check for the protection device, wiring and connection.
	01	Forced cut-off by smoke detector when in use (A8P – X5A)	If in use, check for fire; if none, inspect wiring and connection. If not in use, check the jumper pin.
	17	A2L refrigerant leakage is detected	Check refrigerant leak
	19	A2L refrigerant leakage is evaluated or under mitigation	No action is necessary. Monitor until the error code clears or a different error code is displayed.
	22	High supply air temperature. (Only with supply air temperature sensor and alarm enabled setting)	Check for blower airflow obstructions Check heater capacity Check alarm setpoint
CH	11	A2L refrigerant sensor malfunction (REF SENSOR)—A8P (X6A)	Check connection in indoor control box or actuator
A3	00	Drain pan overflow switch is activated (Only with drain pan overflow switch) (OFS) – A8P (X6M)	Check the connection of condensate drain pipe or wiring and connection of overflow switch.
A6	21	Blower proving switch is activated due to insufficient airflow (BPS) – A8P (X11A)	Check for blower airflow obstructions Check zoning damper open Check blower proving switch installation
A9	01	Electronic expansion valve malfunction (IEV)--A8P (X7A)	Check connection on printed circuit board or actuator.
C0	11	High static switch is activated (Only with High static switch) (HDS) – A8P (X6M)	Check zoning damper open Check high static switch specification and connection
	12	Duct static sensor malfunction(Only with multizone VAV) (DSP)-A8P(X8M)	Check connection on printed circuit board or actuator.
	13	No setting for duct static setpoint via BACnet™ (Only with multizone VAV and BACnet™ setpoint enabled setting)	Set the duct static setpoint via BACnet™ Adjust field settings if not using BACnet™ setpoint.
C5	00	Temperature sensor malfunction (IGT)-A8P(X13A)	Check connection on printed circuit board or actuator.
C9	00	Temperature sensor malfunction (Only with return air temperature sensor) (RAT)-A8P(X2M)	Check connection in indoor control box or actuator.
CA	01	Temperature sensor malfunction(Only with supply air temperature sensor) (SAT)-A8P(X17A)	Check connection in indoor control box or actuator.
CJ	00	Remote controller temperature sensor malfunction (Only with sensor mounted remote controller)	Check the remote controller
E3	01	High pressure switch is activated. (S1PH) -A1P (X2A) High pressure switch connectors are detached. -A1P (X2A)	• Check abnormalities in airflow over condenser coil. • Securely connect each connector. • Check for condenser air flow obstructions.
	02	Temporally stop due to excessive discharge pressure • Refrigerant overcharge. • Condenser airflow is poor	• Check refrigerant amount and recharge. • Check for condenser air flow obstructions.
E4	01	Low pressure malfunction: • Refrigerant shortage. • Evaporator airflow is poor	• Check refrigerant leakage and repair the piping • Check refrigerant amount and recharge. • Check for evaporator air flow obstructions.
E9	01	Electronic expansion valve malfunction (EVMG)-A1P (X21A) (Only with HGRH)	Check connection on printed circuit board or actuator.
	03	Electronic expansion valve malfunction (EVT)-A1P (X22A)	Check connection on printed circuit board or actuator.
	04	Electronic expansion valve malfunction (EVHG)-A1P (X25A) (Only with HGRH)	Check connection on printed circuit board or actuator.
	29	Electronic expansion valve malfunction (EVJ)-A6P(X8A)	Check connection on printed circuit board or actuator.
	31	Electronic expansion valve malfunction (EVM)-A6P(X10A)	Check connection on printed circuit board or actuator.

ERROR CODES LIST

Error Code		Contents	Solutions
Main Code	Sub code Master/sub 1		
F3	01	Discharge temperature too high (R21T): • Refrigerant shortage.	Check refrigerant leakage and repair the piping Check refrigerant amount and recharge.
	20	Compressor casing temperature too high (R14T): • Refrigerant shortage.	Check refrigerant leakage and repair the piping Check refrigerant amount and recharge.
F6	02	Refrigerant overcharge.	Check refrigerant amount and recharge.
H9	01	Temperature sensor malfunction (R1T)-A1P (X18A)	Check connection on printed circuit board or actuator.
J3	16 17	Temperature sensor malfunction (R21T)-A1P(X19A)	Check connection on printed circuit board or actuator.
	47 48	Temperature sensor malfunction (R14T)-A1P(X19A)	Check connection on printed circuit board or actuator.
J5	01	Temperature sensor malfunction (R12T)-A6P(X15A)	Check connection on printed circuit board or actuator.
	24	Temperature sensor malfunction (R22T) - A6P(X15A)	Check connection on printed circuit board or actuator.
J6	01	Temperature sensor malfunction (R11T)-A6P(X15A)	Check connection on printed circuit board or actuator.
	08	Temperature sensor malfunction (R8T)-A1P(X29A)	Check connection on printed circuit board or actuator.
J7	06	Temperature sensor malfunction (R7T)-A1P(X30A)	Check connection on printed circuit board or actuator.
	18	Temperature sensor malfunction (R16T)-A1P(X30A)	Check connection on printed circuit board or actuator.
J8	01	Temperature sensor malfunction (R4T)-A1P(X30A)	Check connection on printed circuit board or actuator.
J9	01	Temperature sensor malfunction (R6T)-A1P(X30A)	Check connection on printed circuit board or actuator.
JA	06	High pressure sensor malfunction: open circuit (HPTR)-A1P (X32A)	Check connection on printed circuit board or actuator.
	07	High pressure sensor malfunction: short circuit (HPTR)-A1P (X32A)	Check connection on printed circuit board or actuator.
JC	06	Low pressure sensor malfunction: open circuit (SPTR)-A1P (X31A)	Check connection on printed circuit board or actuator.
	07	Low pressure sensor malfunction: short circuit (SPTR)-A1P (X31A)	Check connection on printed circuit board or actuator.
LC	14	Transmission trouble. A3P(X63A)-A1P(X40A)	Check connection.
	19	Transmission trouble. A4P(X3A)-A3P(X41A)	Check connection.
	24	Transmission trouble. A5P(X3A)-A4P(X4A)	Check connection.
	33	Transmission trouble. A6P(X2A)-A1P(X20A)	Check connection.
P1	01 07	Unbalanced power supply voltage.	Check if power supply is within the range.
U2	01	Voltage power shortage or open power supply phase.	Check if power supply is within the range. Correct phase order.
	02	Reversed or open power supply phase.	Check if power supply is within the range. Correct phase order.
U4	01	Transmission trouble. A1P(X1M)-A8P(X90A)	Check if the unit is ready for operation (Refer 'Initialization' on '**STATUS MONITOR AND FIELD SETTINGS)** Check connection.
U5	01	Transmission trouble. A8P (X90A) – (P1P2 Terminal) - Remote controller	Check connection in indoor control box or remote controller.
UE	00	Transmission trouble. A1P (X1M)– (F1F2 Terminal) - Centralized controller A1P (X1M)– (F1F2 Terminal) – BACnet™ PCB(X7A) A8P(X35A) – BACnet™ PCB(X1A)	Check connection in indoor control box or centralized controller.

Alarm Code

The unit continues operation with the limited function during the following alarms are indicated.

Error Code		Contents	Solutions
Main Code	Sub code Master/sub 1		
A6	31	Economizer feedback missing (Only with economizer)	Check connection in indoor control box or economizer
A6	32	Economizer feedback position is different from target position (Only with economizer)	Check connection in indoor control box or economizer. Check for obstructions to economizer operation.
CH	07	CO2 sensor malfunction (Only with CO2 sensor) (CO2)-A8P(X7M)	Check connection in indoor control box or actuator.
A0	21	CO2 concentration is higher than setpoint (Only with CO2 sensor)	Check ventilation equipment Check CO2 sensor location
CC	01	Humidity sensor malfunction (Only with return air humidity sensor) (RH)-A8P(X2M)	Check connection in indoor control box or actuator.
H9	04	Temperature sensor malfunction(Only with outdoor air temperature sensor) (OAT)-A8P(X3M)	Check connection in indoor control box or actuator. note) In conditions where outdoor humidity falls below 10%, the alarm may be triggered even if the sensor is operating normally. To verify the validity of the alarm, confirm whether it also occurs when outdoor humidity exceeds 10%.
CC	02	Humidity sensor malfunction (Only with outdoor air humidity sensor) (OH)-A8P(X3M)	Check connection in indoor control box or actuator.
CA	02	Temperature sensor malfunction(Only with supply air temperature sensor) (SAT)-A8P(X17A)	Check connection in indoor control box or actuator.
CA	10	Temperature sensor malfunction(Only with HGRH) (LCT)-A8P(X14A)	Check connection in indoor control box or actuator.
UH	24	Transmission trouble. A8P(X35A)-BACnet™(X1A) or BACnet™ -BAS	Check connection in indoor control box.
A6	33	Big difference between supply air temperature and outdoor temperature in Economizer cooling. (Only with economizer and supply air temperature sensor)	Check connection in indoor control box or economizer Check for obstructions to economizer operation
A0	22	High supply air temperature. (Only with supply air temperature sensor and alarm enabled setting)	Check for blower airflow obstructions Check heater capacity Check alarm setpoint
A0	23	Low supply air temperature. (Only with supply air temperature sensor and alarm enabled setting)	Check for blower airflow obstructions Check alarm setpoint
A0	24	High return air humidity (Only with return air humidity sensor)	
A0	25	Large difference between room or return air temperature and setpoint. (Only with alarm enabled setting)	

External Signal Output

Specific unit statuses, such as alarms, can be output as ON/OFF signals from A8P-X4M.
The conditions under which signals are output and the corresponding terminals are listed below. Refer to the wiring diagram for connection details.

Terminal name	When to output the signal
ALARM	Any error occurs
MAINTENANCE ALARM	The filter cleaning sign is activated.
ECON ALARM	Any of economizer related error occurs when field setting 41-0=3,4,5,6,7 which mean the damper type is ‘economizer’.(C9-00, CJ-00, CA-01, CA-02, H9-4, CC-02, CC-01, A6-31, A6-32, A6-33, CH-07)
REF ALARM	Any of A2L refrigerant detection related error occurs.(A0-17, A0-19, CH-11)Use this output when the zoning damper needs to be opened via an electrical signal upon detection of a refrigerant leak by RDS.

Final System Checks

1. Check to see if all supply and return air grilles are adjusted and the air distribution system is balanced for the best compromise between heating and cooling.
2. Check for air leaks in the ductwork. See Sections on Air Flow Adjustments.
3. Make sure the unit is free of “rattles”, and the tubing in the unit is free from excessive vibration. Also make sure tubes or lines are not rubbing against each other or sheet metal surfaces or edges. If so, correct the trouble.
4. Set the thermostat at the appropriate setting for cooling and heating or automatic changeover for normal use.
5. Be sure the Owner is instructed on the unit operation, filter, servicing, correct thermostat operation, etc.

UNIT OPERATION

Cooling Mode

When the unit is in the cooling mode, it operates exactly as a Summer Air Conditioner unit. In this mode, all the charts and data for service that apply to summer air conditioning apply to the heat pump. Most apply on the heating cycle except that “condenser” becomes “evaporator”, “evaporator” becomes “condenser”, “cooling” becomes “heating”.

Dry Mode

Dry mode is selectable unless the unit is configured as the multizone VAV or HGRH. In this mode, the unit operates similarly to cooling mode but is designed to maintain the room temperature at the start of operation while ensuring dehumidification. To achieve this, the blower speed is limited to the low tap to minimize the sensible heat ratio.

Heating Mode

The heat pump operates in the heating cycle by redirecting refrigerant flow through the refrigerant circuit external to the compressor. This is accomplished with the reversing valve. Hot discharge vapor from the compressor is directed to the indoor coil (evaporator on the cooling cycle) where the heat is removed, and the vapor condenses to liquid. It then goes through the expansion device to the outdoor coil (condenser on the cooling cycle) where the liquid is evaporated, and the vapor goes to the compressor.

When the solenoid valve coil is operated either from heating to cooling or vice versa, the piston in the reversing valve to the low pressure (high pressure) reverse positions in the reversing valve.

Figures 11A and 11B show a schematic of a heat pump on the cooling cycle and the heating cycle. In addition to a reversing valve, a heat pump is equipped with an expansion device for the indoor coil, and similar equipment for the outdoor coil. It is also provided with a defrost control system.

COOLING

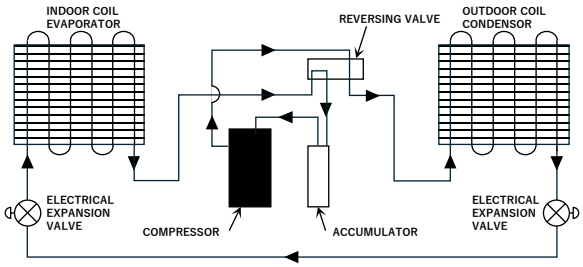

Figure 11A

HEATING

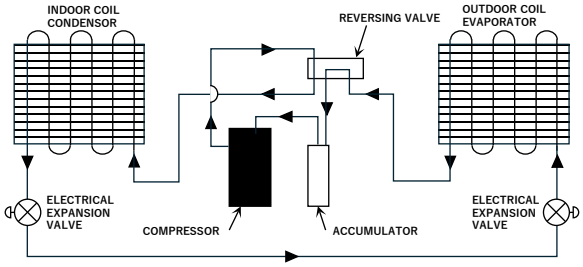

Unit Heating and Cooling Cycles
Figure 11B

When the heat pump is on the heating cycle, the outdoor coil is functioning as an evaporator. The temperature of the refrigerant in the outdoor coil must be below the temperature of the outdoor air in order to extract heat from the air. Thus, the heating capacity of the heat pump decreases as the outdoor temperature drops. This phenomenon is a characteristic of a heat pump. It is a good practice to provide supplementary heat for all heat pump installations in areas where the temperature drops below a level where the heating capacity is insufficient for the heating load. It is also a good practice to provide sufficient supplementary heat to handle the entire heating requirement should there be a component failure of the heat pump, such as a compressor, or refrigerant leak, etc.

Since the temperature of the refrigerant in the outdoor coil on the heating cycle is generally below freezing point, frost forms on the surfaces of the outdoor coil under certain weather conditions of temperature, relative humidity and precipitation. Therefore, it is necessary to reverse the flow of the refrigerant to provide hot gas in the outdoor coil to melt the frost accumulation. This is accomplished by reversing the heat pump to the cooling cycle. At the same time, the outdoor fan stops to hasten the temperature rise of the outdoor coil and lessen the time required for defrosting. Also, The operation of the indoor blower and supplementary heaters can be adjusted through field settings.

Inverter Compressor Operation

The inverter-driven compressor adjusts its speed based on the difference between the space or return air temperature and the setpoint, unless the unit is set to DAT control or HGRH. As the temperature nears the setpoint, the compressor slows down. If it drifts further from the setpoint in an uncomfortable direction, it speeds up.

For multizone VAV with DAT control, the compressor speed adjusts based on the difference between the supply air temperature and the setpoint. In cooling mode, the compressor speed increases when the temperature is above the setpoint and decreases as the temperature approaches the setpoint. The opposite applies in heating mode.

When the HGRH model is in dehumidification mode, the compressor speed is adjusted based on space or return humidity and the humidity setpoint. The higher the humidity, the higher the compressor speed.

When multizone VAV with DAT control and HGRH model in the dehumidification mode are used simultaneously, humidity is controlled by compressor speed, and the DAT is controlled by reheat coil capacity.

If a protection control activates, the behavior changes.

Oil Return Operation

The amount of oil in the compressor is crucial for ensuring the unit's reliable operation. However, the oil level drops during low compressor speed operation because oil leaving the compressor accumulates in the coil and piping.
When the unit detects oil accumulation outside the compressor, it initiates an oil return operation to recover the oil trapped in the circuit.
In this mode, the compressor runs at high speed, ignoring the setpoint, which can sometimes cause overcooling in cooling mode.

In heating mode, the defrost operation also functions as an oil return operation. As a result, defrosting may occur even when there is little frost on the outdoor coil.

Interval and duration of oil return operation change based on the situation.

Thermo-ON/OFF

The terms Thermo-ON and Thermo-OFF describe the internal operating state of the unit when the remote controller is ON.

- Thermo ON: The remote controller is ON, and the unit is actively delivering capacity. Components such as the compressor or heater are in operation to provide cooling or heating as needed.
- Thermo OFF: The remote controller is ON, but the unit is not currently delivering capacity because no heating or cooling is required. The compressor, heater, and other related components remain stopped.

These states are determined by the unit's internal control logic and are not indicated on the remote controller display.

RDS Function

The mitigation system is a stationary device that detects the presence of R-32 refrigerant above 25% LFL using refrigerant sensors and then initiates mitigation actions. The mitigation system's primary function is to reduce the concentration of leaked R-32 refrigerant to prevent serious safety hazards. The mitigation actions are accomplished by halting HVAC operation and continuing indoor blower operation to provide airflow. Once refrigerant concentration reaches below a safe threshold, the unit will remain in mitigation mode for five minutes to evacuate any remaining R-32 refrigerant within the unit. Upon completion, the unit will resume its normal operation. This function will be disabled in any of the following conditions, assuming a fire occurrence:

- The accessory smoke detector is activated.
- An emergency stop signal from the centralized controller is received.
- The EXTERNAL ON/OFF terminals (A8P-X5M) are short-circuited while [External ON/OFF Setting] is set to 'Forced OFF'.

RDS Operation

The mitigation system is controlled by a refrigerant sensor(s), which is secured to a designated location(s) for active monitoring. If a leak is detected, HVAC operation is disabled and the indoor blower fan is activated, providing airflow at or above minimum required airflow to evacuate excess concentration. If a Zone Control system is installed in the ductwork attached to this system, the Zone controller must be powered by signal from external output terminal on indoor control box PCB to ensure that the Zoning Dampers open during mitigation mode to provide ventilation throughout all ducting. When a leak is detected or a sensor failure occurs, an error code will be displayed on both the Daikin controller with an error code display function and the outdoor control box segment display. For details, please refer to the error code list. Once sensors read concentration levels below a safe threshold, a five-minute timer will initiate. Once the time is over, the unit will resume back to its normal operation. If the sensors detect another concentration excess, the unit will go back into mitigation mode and will repeat the same process.
A leak operation test mode is available to simulate the operation when a refrigerant leak is detected. For more details, refer to the earlier section on [RDS Leak Operation Test Mode].

MAINTENANCE

WARNING

ELECTRICAL SHOCK, FIRE OR EXPLOSION HAZARD
FAILURE TO FOLLOW SAFETY WARNINGS EXACTLY COULD RESULT IN DANGEROUS OPERATION, SERIOUS INJURY, DEATH OR PROPERTY DAMAGE.
IMPROPER SERVICING COULD RESULT IN DANGEROUS OPERATION, SERIOUS INJURY, DEATH OR PROPERTY DAMAGE.

- **BEFORE SERVICING, DISCONNECT ALL ELECTRICAL POWER TO UNIT AND LOCK OUT / TAG OUT.**
- **WHEN SERVICING CONTROLS, LABEL ALL WIRES PRIOR TO DISCONNECTING. RECONNECT WIRES CORRECTLY.**
- **VERIFY PROPER OPERATION AFTER SERVICING.**

WARNING

HIGH VOLTAGE!
DISCONNECT ALL POWER AND LOCK OUT / TAG OUT BEFORE SERVICING OR INSTALLING THIS UNIT. MULTIPLE POWER SOURCES MAY BE PRESENT. FAILURE TO DO SO MAY CAUSE PROPERTY DAMAGE, PERSONAL INJURY OR DEATH.

WARNING

TO PREVENT PERSONAL INJURY OR DEATH DUE TO IMPROPER INSTALLATION, ADJUSTMENT, ALTERATION, SERVICE, REPAIR OR MAINTENANCE, REFER TO THIS MANUAL. FOR ADDITIONAL ASSISTANCE OR INFORMATION, CONSULT A QUALIFIED INSTALLER OR SERVICER AGENCY.

CAUTION

SHEET METAL PARTS, SCREWS, CLIPS AND SIMILAR ITEMS INHERENTLY HAVE SHARP EDGES, AND IT IS NECESSARY THAT THE INSTALLER AND SERVICE PERSONNEL EXERCISE CAUTION.

Preventive maintenance is the best way to avoid unnecessary expense and inconvenience. Have this system inspected at regular intervals by qualified service personnel, at least twice a year. Routine maintenance should cover the following items:

1. Check and tighten all screws, and wire connections as needed.
2. Clean evaporator and condenser coils mechanically or with cold water, if necessary. Usually any fouling is only matted on the entering air face of the coil and can be removed by brushing.
3. Replace filters as needed (see Filters section).
4. Check for blockage of condensate drain.
5. Check power and control voltages.
6. Check running amperage.
7. Check operating temperatures and pressures.
8. Check and adjust damper linkages.
9. Check operation of all safety controls.
10. Check condenser fans and tighten set screws.

MAINTENANCE PRECAUTIONS

When performing service to inverter equipment:

1. Make sure to turn off the power supply and lock out / tag out before opening the outdoor control box cover.

- Do not open the outdoor control box cover for 10 minutes after the power supply is turned off.

How to open the outdoor control box cover:

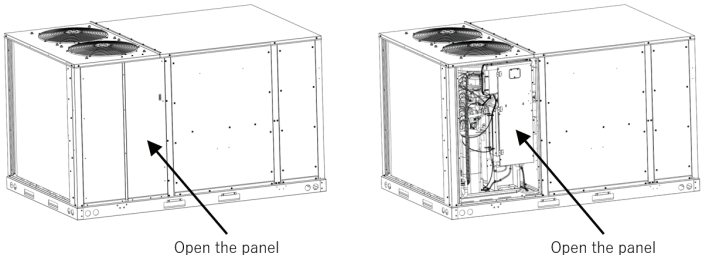

2. Measure the AC voltage between terminals on the terminal block for power supply with a tester and confirm that the power supply is turned off. In addition, measure points as shown in the figure below, with a tester and confirm that the voltage of the capacitor in the main circuit is less than 50 V DC.

OUTDOOR CONTROL BOX

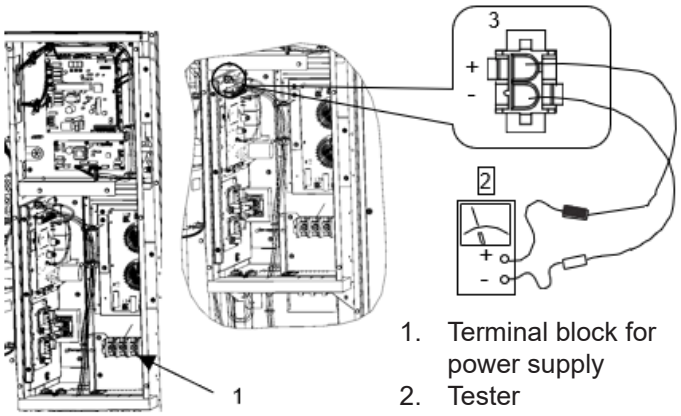

1. Terminal block for power supply
2. Tester
3. White connector

1. To prevent damaging the printed circuit board, touch a non-coated metal part to eliminate static electricity before pulling out or plugging in connectors.
2. Pull out junction connectors for the outdoor fan motors before starting service operation on the inverter equipment.

WARNING

BE CAREFUL NOT TO TOUCH THE LIVE PARTS. (IF A FAN ROTATES DUE TO STRONG WIND, IT MAY STORE ELECTRICITY IN THE CAPACITOR OR IN THE MAIN CIRCUIT AND CAUSE ELECTRIC SHOCK.)

3. After the service is finished, plug the junction connector back in. Otherwise, the error code E7 will be displayed on the user interface or on the outdoor unit segment display and normal operation will not be performed.

For details refer to the wiring diagram labeled on the back of the indoor control box panel.
Pay attention to the fan. It is dangerous to inspect the unit while the fan is running. Make sure to turn off the main switch and to remove the fuses from the control.

NOTE: PLAY IT SAFE. FOR PROTECTION OF THE PRINTED CIRCUIT BOARD, TOUCH THE CONTROL BOX CASING BY HAND IN ORDER TO ELIMINATE STATIC ELECTRICITY FROM YOUR BODY BEFORE PERFORMING SERVICE.

FILTERS

CAUTION

TO PREVENT PROPERTY DAMAGE DUE TO FIRE AND LOSS OF EQUIPMENT EFFICIENCY OR EQUIPMENT DAMAGE DUE TO DUST AND LINT BUILD UP ON INTERNAL PARTS, NEVER OPERATE UNIT WITHOUT AN AIR FILTER INSTALLED IN THE RETURN AIR SYSTEM.

Every application may require a different frequency of replacement of dirty filters. Filters must be replaced at least every three (3) months during operating seasons.

Dirty filters are the most common cause of inadequate heating or cooling performance. Filter inspection should be made at least every two months; more often, if necessary, because of local conditions and usage.
Dirty throwaway filters should be discarded and replaced with a new, clean filter.

Disposable return air filters are supplied with this unit. See the unit Specification Sheet or Technical Manual for the correct size and part number. To remove the filters, remove the filter access panel on return side of the unit.

The unit has a function to display a filter cleaning sign on the remote controller when either the indoor blower running time reaches the set duration or the dirty filter switch is triggered. The condition for displaying the sign can be changed through field settings (See **COMMISSIONING** for detail). If the sign appears, follow the steps below in case of BRC controller.

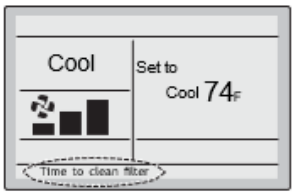

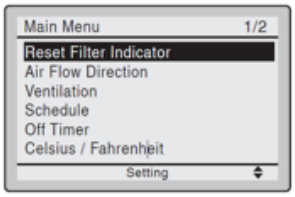

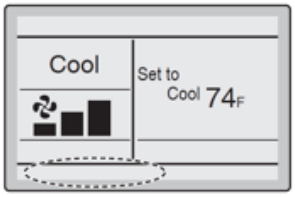

1. When it is time to clean or replace the filter, one of the following messages will appear on the bottom of the basic screen of remote controller.
   "Time to clean filter"
   "Time to clean filter & element"
   "Time to clean element"
2. Wash, clean, or replace the filter or element.
3. Reset the filter indicator when the filter or element is cleaned or replaced.
4. Press Menu/OK button. The main menu screen will appear.
5. Press ▼▲ buttons to select Reset Filter Indicator on the main menu screen and press Menu/OK button.
6. The message shown in illustration 1 will disappear from the basic screen when the filter sign is reset.

CABINET FINISH MAINTENANCE

Use a fine grade automotive wax on the cabinet finish to maintain the finish's original high luster. This is especially important in installations with extended periods of direct sunlight.

CLEAN OUTSIDE COIL (QUALIFIED SERVICER ONLY)

The coil with the outside air flowing over it should be inspected annually and cleaned as frequently as necessary to keep the finned areas free of lint, hair and debris. Clean coil from inside out.

CLEAN INDOOR COIL (QUALIFIED SERVICER ONLY)

Before cleaning the indoor coil, A2L sensor must be removed from the unit to avoid damage and contamination. Air filters should also be removed before performing maintenance. The coil with the filtered air flowing over it should be inspected and cleaned as frequently as necessary to keep the finned areas free of debris. Any air blowing or water rinsing should be performed from inside-out (opposite operating airflow direction) to prevent damage to the tube, fin coil and any other components.

RECOVERY

When removing refrigerant from a system, either for servicing or decommissioning, all refrigerants must be removed safely.

When transferring refrigerant into cylinders, ensure that only appropriate refrigerant recovery cylinders are employed. Ensure that the correct number of cylinders for holding the total system charge is available. All cylinders to be used are designated for the recovered refrigerant and labeled for that refrigerant (i.e. special cylinders for the recovery of refrigerant). Cylinders shall be complete with pressure-relief valve and associated shut-off valves in good working order. Empty recovery cylinders are evacuated and, if possible, cooled before recovery occurs.

Before starting recovery, the unit needs to be set for recovery operation mode to open all valves. Follow the below steps.

1. Turn the unit OFF and wait 30minutes to make sure the all components have stopped operating. Set the unit in [Refrigerant Recovery / Evacuation Mode] = 'ON'
2. When confirmed, all expansion valves will fully open. At that moment the segment display indication= 01 and the user interface indicate. "Test Operation" and CENTRAL CONTROL and the operation will be prohibited
3. Press BS3 to stop recovery mode.

If the power supply is turned off while in Recovery Operation Mode, the solenoid valve will close, potentially preventing the recovery of refrigerant from some parts of the piping. Therefore, keep the power supply on during the recovery process.

All recovery equipment must be suitable for the recovery of A2L refrigerant and in good working order. Ensure that you follow the manufacturer's instructions carefully. If in doubt, the manufacturer should be consulted. In addition, a set of calibrated weighing scales shall be available and in good working order. Hoses shall be complete with leak-free disconnect couplings and in good condition.

The recovered refrigerant shall be processed according to local legislation in the correct recovery cylinder, and the relevant waste transfer note arranged. Do not mix refrigerants in recovery units and especially not in cylinders.

If compressors or compressor oils are to be removed, ensure that they have been evacuated to an acceptable level to make certain that flammable refrigerant does not remain within the lubricant. The compressor body shall not be heated by an open flame or other ignition sources to accelerate this process. When oil is drained from a system, it shall be carried out safely.

Charging Procedures

In addition to conventional charging procedures, the following requirements shall be followed.

- Prior to charging, perform the evacuation according to the method described in the DEEP VACUUM METHOD referenced later in this manual.
- Ensure that contamination of different refrigerants does not occur when using charging equipment.
- Hoses or lines shall be as short as possible to minimize the amount of refrigerant contained in them.
- Cylinders shall be kept in an appropriate position according to the instructions.
- Ensure that the REFRIGERATING SYSTEM is grounded prior to charging the system with refrigerant.
- Label the system when charging is complete (if not already).
- Extreme care shall be taken not to overfill the REFRIGERATING SYSTEM.
- Charge the refrigerant type and quantity as indicated on the serial plate.

NOTE: Grounding is defined as achieving an earth ground by connecting the equipment supplied grounding lug to the earth. This should be verified by a certified Technician.

Prior to recharging the system, it shall be pressure-tested with the appropriate purging gas. The system shall be leak-tested on completion of charging but prior to commissioning. A follow up leak test shall be carried out prior to leaving the site

IMPORTANT: REFER TO THE STANDING PRESSURE TEST/LEAK DETECTION METHOD REFERENCED LATER IN THIS MANUAL

Lubrication

The fan shaft bearings, the supply fan motors, the condenser fan motors and compressors are permanently lubricated.

Functional Parts

Refer to the unit Parts Catalog for a list of functional parts. Parts are available from your distributor.

TROUBLESHOOTING

THE FOLLOWING INFORMATION IS FOR USE BY QUALIFIED SERVICE AGENCY ONLY: OTHERS SHOULD NOT ATTEMPT TO SERVICE THIS EQUIPMENT.

Common Causes of Unsatisfactory Operation of Heat Pump on the Heating Cycle.

Inadequate Air Volume Through Indoor Coil

When a heat pump is in the heating cycle, the indoor coil is functioning as a condenser. The return air filter must always be clean, and sufficient air volume must pass through the indoor coil to prevent excessive discharge pressure, and high pressure cut out.

Outside Air into Return Duct

Do not introduce cold outside air into the return duct of a heat pump installation. For units with 2-speed motors, do not allow air entering the indoor coil to drop below 65°F. Air below this temperature will cause low discharge pressure, thus low suction pressure, and excessive defrost cycling resulting in low heating output. It may also cause false defrosting.

Undercharge

An undercharged heat pump on the heating cycle will cause low discharge pressure resulting in low suction pressure and frost accumulation on the outdoor coil.

Poor "Defrost" Sensor contact

The unit's defrost condenser coil sensor must make good thermal contact with the correct location on the outdoor coil tubing. Poor contact may prevent the unit from starting defrost cycle at the proper time, resulting in excessive capacity loss and longer defrost times.

Malfunctioning Reversing Valve - This may be due to:

1. **Solenoid not energized** - In order to determine if the solenoid is energized, touch the nut that holds the solenoid cover in place with a screwdriver. If the nut magnetically holds the screwdriver, the solenoid is energized, and the unit is in the cooling cycle.
2. **No voltage at unit's solenoid** - Check unit voltage. If no voltage, check wiring circuit.
3. **Valve will not shift:**
   a. **Undercharged** - check for leaks;
   b. **Valve Body Damaged** - Replace valve;
   c. **Unit Properly Charged** - If it is on the heating cycle, raise the discharge pressure by restricting airflow through the indoor coil. If the valve does not shift, tap it lightly on both ends with a screwdriver handle. DO NOT TAP THE VALVE BODY. If the unit is on the cooling cycle, raise the discharge pressure by restricting airflow through the outdoor coil. If the valve does not shift after the above attempts, cut the unit off and wait until the discharge and suction pressure equalize, and repeat above steps. If the valve does not shift, replace it.

Servicing measures for the REFRIGERANT DETECTION SYSTEM:

Before servicing identify error code indicating on the remote controller or outdoor control box segment display. After identifying the error code, take recommended actions as specified in the solutions for error codes table.

REFRIGERANT SENSORS for REFRIGERANT DETECTION SYSTEMS shall only be replaced with sensors specified by the manufacturer. If the REFRIGERANT SENSOR requires replacement, please replace with Sensata R32 Sensor PN#RGD-00ML12 (Daikin PN#SER2A08012).

THE FOLLOWING INSTRUCTIONS ARE MANDATORY FOR A2L SYSTEMS AND SUPERSEDE OTHER INSTRUCTIONS

WARNING

ONLY BRAZING TECHNIQUES OR APPROVED MECHANICAL JOINTS SHOULD BE USED TO CONNECT REFRIGERANT TUBING CONNECTIONS. NON-APPROVED MECHANICAL CONNECTORS AND OTHER METHODS ARE NOT PERMITTED IN THIS SYSTEM CONTAINING A2L REFRIGERANT. APPROVED MECHANICAL JOINTS WILL BE DETAILED IN THE PRODUCT'S SPECIFICATION SHEETS.

STANDING PRESSURE TEST/LEAK DETECTION METHOD

Set the unit for evacuation mode to open all valves. Follow the same procedure as for recovery operation mode.

Using dry nitrogen or dry helium, pressurize the system to 450 PSIG. allow the pressure to stabilize and hold for 15 minutes (minimum). The system is considered leak-free if the pressure does not drop below 450 PSIG. If, after 15 minutes, the pressure drops below 450 PSIG, it implies a leak in the system. Proceed with identifying and sealing the leak and repeating the Standing Pressure Test. Leak test the system using dry nitrogen or dry helium and soapy water to identify leaks. **No refrigerant shall be used for pressure testing to detect leaks**. Proceed to system evacuation using the Deep Vacuum Method.

DEEP VACUUM METHOD

The Deep Vacuum Method requires a vacuum pump rated for 500 microns or less. This method effectively and efficiently ensures the system is free of non-condensable air and moisture. The Triple Evacuation Method is detailed in the Service Manual for this product model as an alternative. To expedite the evacuation procedure, it is recommended that the Schrader Cores be removed from the service valves using a core-removal tool.

1. Set the unit for evacuation mode to open all valves. Follow the same procedure as for recovery operation mode.
2. Connect the vacuum pump, micron gauge, and vacuum-rated hoses to both service valves. Evacuation must use both service valves to eliminate system mechanical seals.
3. Evacuate the system to less than 500 microns.
4. Isolate the pump from the system and hold the vacuum for 10 minutes (minimum). Typically, pressure will rise slowly during this period. If the pressure rises to less than 1000 microns and remains steady, the system is considered leak-free; proceed to system charging and startup.
5. If pressure rises above 1000 microns but holds steady below 2000 microns, non-condensable air or moisture may remain, or a small leak may be present. Return to step 2: If the same result is achieved, check for leaks and repair. Repeat the evacuation procedure.

6. If pressure rises above 2000 microns, a leak is present. Check for leaks and repair them. Then, repeat the evacuation procedure.

ACCESSORY INSTALLATION

WARNING

ALL ACCESSORIES THAT MAY BECOME A POTENTIAL IGNITION SOURCE IF INSTALLED. SUCH AS ELECTRONIC AIR CLEANERS, MUST ONLY BE POWERED THROUGH OUR ACCESSORY CONTROL BOARD KIT. IF AN ELECTRONIC AIR CLEANER IS ALREADY INSTALLED IN THE DUCT WORK AND NOT CONNECTED TO THE ACCESSORY CONTROL BOARD. IT WILL HAVE TO BE DISABLED OR REMOVED. ENSURE THAT ANY ADDITIONAL WIRING FROM THE INDOOR UNIT TO THE ACCESSORY CONTROL BOARD IS ROUTED AND PROTECTED FROM DAMAGE WEAR, AVOIDING THE FLUE PIPE AND ANY JOINTS THAT MAY NEED BRAZED OR DISCONNECTED FOR SERVICE. REFER TO THE PRODUCT SPECIFICATION SHEET FOR THE ACCESSORY CONTROL BOARD KIT PART NUMBER.

ALTITUDE ADJUSTMENT FACTOR TO CALCULATE MINIMUM ROOM AREA

The Indoor equipment mitigation requirements are calculated at sea level. For higher altitudes adjust the minimum room area specified on or near the Serial Plate by the corresponding altitude adjustment factor shown below. This table is provided as a reference.

Adjusted room area ($A_{min\ adj}$) is the product of the minimum room area specified in the serial plate and the adjustment factor AF, as shown in below formula
$A_{min\ adj} = A_{min}$ (serial plate) * AF

Height in meters	Height in feet	Altitude Adjustment Factor (AF)
At sea level	At sea level	1.00
1~200	1~660	1.02
200~400	660~1320	1.03
400~600	1320~1970	1.07
600~800	1970~2630	1.05
800~1000	2630~3290	1.09
1000~1200	3290~3940	1.11
1200~1400	3940~4600	1.13
1400~1600	4600~5250	1.15
1600~1800	5250~5910	1.17
1800~2000	5910~6570	1.19
2000~2200	6570~7220	1.21
2200~2400	7220~7880	1.26
2400~2600	7880~8540	1.24
2600~2800	8540~9190	1.29
2800~3000	9190~9850	1.31
3000~3200	9850~10500	1.34

APPENDIX A BLOWER PERFORMANCE DATA
7.5 TON HP

7.5TON
MODELS : DVH0903D, DVH0904D
STANDARD STATIC TO 3.5HP (0.2~1.4ESP)
DOWN FLOW

CFM	0.2			0.4			0.6			0.8			1.0		
	RPM	SPEED %	POWER INPUT	RPM	SPEED %	POWER INPUT	RPM	SPEED %	POWER INPUT	RPM	SPEED %	POWER INPUT	RPM	SPEED %	POWER INPUT
1400	445	21.8%	212	552	25.4%	310	651	28.5%	428	713	30.1%	489	796	33.1%	620
1600	459	23.9%	243	568	27.7%	355	669	30.9%	487	744	33.4%	592	821	36.2%	721
1800	473	26.1%	280	583	29.9%	403	685	33.3%	547	769	36.4%	688	842	39.1%	819
2000	489	28.4%	323	598	32.3%	455	700	35.6%	610	789	39.3%	777	860	41.9%	917
2200	505	30.9%	373	612	34.6%	512	714	38.0%	676	805	42.0%	863	876	44.8%	1015
2400	522	33.6%	430	627	37.1%	575	728	40.5%	747	819	44.6%	948	890	47.7%	1115
2600	541	36.4%	497	643	39.8%	646	741	43.2%	824	831	47.3%	1033	903	50.7%	1219
2800	561	39.5%	573	658	42.7%	725	753	46.0%	908	842	50.0%	1122	914	53.8%	1328
3000	582	42.8%	661	675	45.8%	815	766	49.1%	1002	851	52.9%	1217	924	57.1%	1443
3200	605	46.4%	760	692	49.2%	917	778	52.5%	1108	860	56.1%	1320	933	60.6%	1566
3400	629	50.2%	874	710	52.9%	1033	791	56.2%	1225	868	59.5%	1434	942	64.4%	1698
3600	655	54.4%	1001	729	57.0%	1164	803	60.2%	1358	876	63.4%	1561	950	68.5%	1840
CFM	1.2			1.4			1.6			1.8			2.0		
	RPM	SPEED %	POWER INPUT	RPM	SPEED %	POWER INPUT	RPM	SPEED %	POWER INPUT	RPM	SPEED %	POWER INPUT	RPM	SPEED %	POWER INPUT
1400	848	34.9%	707	886	35.8%	758	-	-	-	-	-	-	-	-	-
1600	869	37.9%	807	904	38.6%	853	-	-	-	-	-	-	-	-	-
1800	890	40.9%	913	923	41.6%	962	-	-	-	-	-	-	-	-	-
2000	909	44.0%	1024	944	44.8%	1084	-	-	-	-	-	-	-	-	-
2200	927	47.1%	1140	965	48.2%	1220	-	-	-	-	-	-	-	-	-
2400	945	50.3%	1262	988	51.8%	1369	-	-	-	-	-	-	-	-	-
2600	961	53.6%	1389	1011	55.5%	1529	-	-	-	-	-	-	-	-	-
2800	976	57.1%	1522	1033	59.4%	1698	-	-	-	-	-	-	-	-	-
3000	991	60.6%	1661	1054	63.5%	1874	-	-	-	-	-	-	-	-	-
3200	1003	64.4%	1805	1073	67.8%	2052	-	-	-	-	-	-	-	-	-
3400	1015	68.3%	1954	1088	72.2%	2230	-	-	-	-	-	-	-	-	-
3600	1024	72.5%	2105	1099	76.8%	2401	-	-	-	-	-	-	-	-	-

HORIZONTAL FLOW

CFM	0.2			0.4			0.6			0.8			1.0		
	RPM	SPEED %	POWER INPUT	RPM	SPEED %	POWER INPUT	RPM	SPEED %	POWER INPUT	RPM	SPEED %	POWER INPUT	RPM	SPEED %	POWER INPUT
1400	442	21.5%	194	551	25.1%	290	651	28.4%	406	693	28.9%	429	795	33.1%	595
1600	457	23.6%	226	568	27.4%	337	667	30.7%	461	729	32.4%	538	816	35.8%	684
1800	472	25.9%	263	585	29.8%	387	683	33.0%	519	759	35.7%	640	836	38.5%	776
2000	489	28.3%	307	601	32.2%	442	698	35.3%	581	782	38.7%	737	854	41.3%	870
2200	507	30.8%	358	617	34.7%	502	713	37.7%	648	802	41.6%	830	870	44.1%	969
2400	526	33.6%	418	634	37.3%	569	727	40.3%	720	818	44.5%	922	886	47.0%	1072
2600	547	36.5%	487	650	40.1%	643	742	43.0%	800	833	47.3%	1014	901	50.1%	1181
2800	569	39.7%	567	667	43.1%	726	756	46.0%	889	845	50.2%	1109	915	53.3%	1297
3000	592	43.1%	658	685	46.2%	818	770	49.1%	988	857	53.3%	1210	929	56.7%	1419
3200	616	46.8%	762	704	49.7%	923	785	52.6%	1098	867	56.5%	1319	941	60.4%	1549
3400	642	50.7%	879	723	53.4%	1041	800	56.4%	1221	877	60.1%	1438	952	64.2%	1687
3600	669	54.9%	1010	742	57.5%	1173	815	60.5%	1359	887	64.0%	1570	963	68.4%	1832
CFM	1.2			1.4			1.6			1.8			2.0		
	RPM	SPEED %	POWER INPUT	RPM	SPEED %	POWER INPUT	RPM	SPEED %	POWER INPUT	RPM	SPEED %	POWER INPUT	RPM	SPEED %	POWER INPUT
1400	844	34.5%	666	888	35.7%	735	-	-	-	-	-	-	-	-	-
1600	861	37.1%	750	903	38.3%	821	-	-	-	-	-	-	-	-	-
1800	879	39.8%	846	920	41.2%	923	-	-	-	-	-	-	-	-	-
2000	898	42.8%	952	939	44.3%	1041	-	-	-	-	-	-	-	-	-
2200	917	45.9%	1070	960	47.8%	1174	-	-	-	-	-	-	-	-	-
2400	936	49.3%	1198	982	51.4%	1321	-	-	-	-	-	-	-	-	-
2600	955	52.8%	1335	1004	55.3%	1480	-	-	-	-	-	-	-	-	-
2800	973	56.4%	1480	1026	59.4%	1649	-	-	-	-	-	-	-	-	-
3000	989	60.3%	1632	1048	63.6%	1825	-	-	-	-	-	-	-	-	-
3200	1005	64.3%	1788	1067	68.0%	2004	-	-	-	-	-	-	-	-	-
3400	1018	68.4%	1947	1083	72.5%	2182	-	-	-	-	-	-	-	-	-
3600	1030	72.6%	2104	1095	77.1%	2355	-	-	-	-	-	-	-	-	-

Shaded area indicates air flow below 2250 SCFM (300 SCFM/ton) that is not recommended for High blower tap.
Valid motor operating range for Blower speed % setting is 20 - 90.

RPM: Blower Rotation Speed [/min]
SPEED% : Blower speed % setting value. Refer to ‘COMMISSIONING’ section for more detail.
POWER INPUT : Blower motor power consumption [W]

APPENDIX A BLOWER PERFORMANCE DATA
7.5 TON HP

7.5 TON
MODELS: DVH0903W, DVH0904W
HIGH STATIC TO 3.5HP (0.2~2.0ESP)
DOWN FLOW

CFM	0.2			0.4			0.6			0.8			1.0		
	RPM	SPEED %	POWER INPUT	RPM	SPEED %	POWER INPUT	RPM	SPEED %	POWER INPUT	RPM	SPEED %	POWER INPUT	RPM	SPEED %	POWER INPUT
1800	473	26.1%	280	583	29.9%	403	685	33.3%	547	769	36.4%	688	842	39.1%	819
2000	489	28.4%	323	598	32.3%	455	700	35.6%	610	789	39.3%	777	860	41.9%	917
2200	505	30.9%	373	612	34.6%	512	714	38.0%	676	805	42.0%	863	876	44.8%	1015
2400	522	33.6%	430	627	37.1%	575	728	40.5%	747	819	44.6%	948	890	47.7%	1115
2600	541	36.4%	497	643	39.8%	646	741	43.2%	824	831	47.3%	1033	903	50.7%	1219
2800	561	39.5%	573	658	42.7%	725	753	46.0%	908	842	50.0%	1122	914	53.8%	1328
3000	582	42.8%	661	675	45.8%	815	766	49.1%	1002	851	52.9%	1217	924	57.1%	1443
3200	605	46.4%	760	692	49.2%	917	778	52.5%	1108	860	56.1%	1320	933	60.6%	1566
3400	629	50.2%	874	710	52.9%	1033	791	56.2%	1225	868	59.5%	1434	942	64.4%	1698
3600	655	54.4%	1001	729	57.0%	1164	803	60.2%	1358	876	63.4%	1561	950	68.5%	1840
3800	681	58.9%	1144	749	61.5%	1312	817	64.7%	1506	885	67.7%	1704	957	73.0%	1993
CFM	1.2			1.4			1.6			1.8			2.0		
	RPM	SPEED %	POWER INPUT	RPM	SPEED %	POWER INPUT	RPM	SPEED %	POWER INPUT	RPM	SPEED %	POWER INPUT	RPM	SPEED %	POWER INPUT
1800	890	40.9%	913	923	41.6%	962	975	44.1%	1088	1039	46.8%	1250	1070	48.0%	1349
2000	909	44.0%	1024	944	44.8%	1084	994	47.4%	1218	1056	50.0%	1384	1082	51.3%	1462
2200	927	47.1%	1140	965	48.2%	1220	1015	50.9%	1362	1073	53.5%	1530	1097	54.8%	1599
2400	945	50.3%	1262	988	51.8%	1369	1036	54.6%	1519	1091	57.2%	1689	1115	58.6%	1762
2600	961	53.6%	1389	1011	55.5%	1529	1058	58.5%	1691	1109	61.2%	1863	1135	62.7%	1950
2800	976	57.1%	1522	1033	59.4%	1698	1081	62.7%	1876	1127	65.5%	2052	1158	67.3%	2162
3000	991	60.6%	1661	1054	63.5%	1874	1103	67.1%	2071	1146	70.1%	2255	1183	72.2%	2393
3200	1003	64.4%	1805	1073	67.8%	2052	1124	71.8%	2274	1165	75.1%	2472	1207	77.5%	2637
3400	1015	68.3%	1954	1088	72.2%	2230	1142	76.8%	2481	1185	80.5%	2700	1228	83.3%	2878
3600	1024	72.5%	2105	1099	76.8%	2401	1157	82.2%	2684	1204	86.4%	2933	1242	89.6%	3097
3800	1031	76.9%	2257	1104	81.5%	2559	1165	87.8%	2876						

HORIZONTAL FLOW

CFM	0.2			0.4			0.6			0.8			1.0		
	RPM	SPEED %	POWER INPUT	RPM	SPEED %	POWER INPUT	RPM	SPEED %	POWER INPUT	RPM	SPEED %	POWER INPUT	RPM	SPEED %	POWER INPUT
1800	472.4	25.9%	263	584.9	29.8%	387	682.7	33.0%	519	758.6	35.7%	640	835.5	38.5%	776
2000	489.2	28.3%	307	601.2	32.2%	442	697.8	35.3%	581	782.2	38.7%	737	853.5	41.3%	870
2200	507.1	30.8%	358	617.4	34.7%	502	712.6	37.7%	648	801.8	41.6%	830	870.4	44.1%	969
2400	526.2	33.6%	418	633.7	37.3%	569	727.1	40.3%	720	818.3	44.5%	922	886.3	47.0%	1072
2600	546.7	36.5%	487	650.4	40.1%	643	741.5	43.0%	800	832.7	47.3%	1014	901.3	50.1%	1181
2800	568.6	39.7%	567	667.5	43.1%	726	756.0	46.0%	889	845.4	50.2%	1109	915.4	53.3%	1297
3000	591.8	43.1%	658	685.2	46.2%	818	770.4	49.1%	988	856.8	53.3%	1210	928.5	56.7%	1419
3200	616.3	46.8%	762	703.5	49.7%	923	785.0	52.6%	1098	867.3	56.5%	1319	940.8	60.4%	1549
3400	642.1	50.7%	879	722.6	53.4%	1041	799.8	56.4%	1221	877.1	60.1%	1438	952.2	64.2%	1687
3600	669.0	54.9%	1010	742.5	57.5%	1173	815.0	60.5%	1359	886.5	64.0%	1570	962.6	68.4%	1832
3800	696.7	59.4%	1157	763.2	61.9%	1321	830.7	65.1%	1511	896.1	68.3%	1716	972.1	72.8%	1986
CFM	1.2			1.4			1.6			1.8			2.0		
	RPM	SPEED %	POWER INPUT	RPM	SPEED %	POWER INPUT	RPM	SPEED %	POWER INPUT	RPM	SPEED %	POWER INPUT	RPM	SPEED %	POWER INPUT
1800	879.0	39.8%	846	920.2	41.2%	923	973.3	43.1%	1040	1026.6	45.7%	1180	1077.6	48.1%	1321
2000	897.7	42.8%	952	939.2	44.3%	1041	989.6	46.4%	1156	1041.2	48.8%	1301	1089.6	51.1%	1438
2200	916.8	45.9%	1070	959.8	47.8%	1174	1007.0	49.7%	1285	1056.1	52.0%	1428	1101.9	54.1%	1561
2400	935.8	49.3%	1198	981.7	51.4%	1321	1025.7	53.3%	1428	1071.9	55.3%	1568	1115.2	57.4%	1699
2600	954.5	52.8%	1335	1004.2	55.3%	1480	1045.6	57.1%	1588	1089.3	59.1%	1725	1130.4	61.1%	1859
2800	972.5	56.4%	1480	1026.5	59.4%	1649	1066.7	61.2%	1766	1108.6	63.2%	1906	1148.2	65.4%	2051
3000	989.5	60.3%	1632	1047.7	63.6%	1825	1088.7	65.7%	1962	1130.1	68.0%	2115	1169.3	70.7%	2281
3200	1004.9	64.3%	1788	1066.9	68.0%	2004	1111.0	70.6%	2174	1153.9	73.5%	2356	1194.4	76.9%	2555
3400	1018.4	68.4%	1947	1083.1	72.5%	2182	1132.6	76.0%	2401	1179.4	79.9%	2627	1224.1	84.4%	2872
3600	1029.6	72.6%	2104	1095.0	77.1%	2355	1151.9	81.8%	2634	1205.4	87.3%	2924			
3800	1037.8	77.0%	2258	1101.7	81.8%	2518	1166.6	88.2%	2864						

Shaded area indicates air flow below 2250 SCFM (300 SCFM/ton) that is not recommended for High blower tap.
Valid motor operating range for Blower speed % setting is 20 - 90.

RPM: Blower Rotation Speed [/min]
SPEED% : Blower speed % setting value. Refer to ‘COMMISSIONING’ section for more detail.
POWER INPUT : Blower motor power consumption [W]

APPENDIX A BLOWER PERFORMANCE DATA
8.5 TON HP

8.5TON
MODELS : DVH1023D, DVH1024D
STANDARD STATIC TO 3.5HP (0.2~1.4ESP)
DOWN FLOW

CFM	0.2			0.4			0.6			0.8			1.0		
	RPM	SPEED %	POWER INPUT	RPM	SPEED %	POWER INPUT	RPM	SPEED %	POWER INPUT	RPM	SPEED %	POWER INPUT	RPM	SPEED %	POWER INPUT
1600	459	23.9%	243	568	27.7%	355	669	30.9%	487	744	33.4%	592	821	36.2%	721
1800	473	26.1%	280	583	29.9%	403	685	33.3%	547	769	36.4%	688	842	39.1%	819
2000	489	28.4%	323	598	32.3%	455	700	35.6%	610	789	39.3%	777	860	41.9%	917
2200	505	30.9%	373	612	34.6%	512	714	38.0%	676	805	42.0%	863	876	44.8%	1015
2400	522	33.6%	430	627	37.1%	575	728	40.5%	747	819	44.6%	948	890	47.7%	1115
2600	541	36.4%	497	643	39.8%	646	741	43.2%	824	831	47.3%	1033	903	50.7%	1219
2800	561	39.5%	573	658	42.7%	725	753	46.0%	908	842	50.0%	1122	914	53.8%	1328
3000	582	42.8%	661	675	45.8%	815	766	49.1%	1002	851	52.9%	1217	924	57.1%	1443
3200	605	46.4%	760	692	49.2%	917	778	52.5%	1108	860	56.1%	1320	933	60.6%	1566
3400	629	50.2%	874	710	52.9%	1033	791	56.2%	1225	868	59.5%	1434	942	64.4%	1698
3600	655	54.4%	1001	729	57.0%	1164	803	60.2%	1358	876	63.4%	1561	950	68.5%	1840
3800	681	58.9%	1144	749	61.5%	1312	817	64.7%	1506	885	67.7%	1704	957	73.0%	1993
CFM	1.2			1.4			1.6			1.8			2.0		
	RPM	SPEED %	POWER INPUT	RPM	SPEED %	POWER INPUT	RPM	SPEED %	POWER INPUT	RPM	SPEED %	POWER INPUT	RPM	SPEED %	POWER INPUT
1600	869	37.9%	807	904	38.6%	853	-	-	-	-	-	-	-	-	-
1800	890	40.9%	913	923	41.6%	962	-	-	-	-	-	-	-	-	-
2000	909	44.0%	1024	944	44.8%	1084	-	-	-	-	-	-	-	-	-
2200	927	47.1%	1140	965	48.2%	1220	-	-	-	-	-	-	-	-	-
2400	945	50.3%	1262	988	51.8%	1369	-	-	-	-	-	-	-	-	-
2600	961	53.6%	1389	1011	55.5%	1529	-	-	-	-	-	-	-	-	-
2800	976	57.1%	1522	1033	59.4%	1698	-	-	-	-	-	-	-	-	-
3000	991	60.6%	1661	1054	63.5%	1874	-	-	-	-	-	-	-	-	-
3200	1003	64.4%	1805	1073	67.8%	2052	-	-	-	-	-	-	-	-	-
3400	1015	68.3%	1954	1088	72.2%	2230	-	-	-	-	-	-	-	-	-
3600	1024	72.5%	2105	1099	76.8%	2401	-	-	-	-	-	-	-	-	-
3800	1031	76.9%	2257	1104	81.5%	2559	-	-	-	-	-	-	-	-	-

HORIZONTAL FLOW

CFM	0.2			0.4			0.6			0.8			1.0		
	RPM	SPEED %	POWER INPUT	RPM	SPEED %	POWER INPUT	RPM	SPEED %	POWER INPUT	RPM	SPEED %	POWER INPUT	RPM	SPEED %	POWER INPUT
1600	457	23.6%	226	568	27.4%	337	667	30.7%	461	729	32.4%	538	816	35.8%	684
1800	472	25.9%	263	585	29.8%	387	683	33.0%	519	759	35.7%	640	836	38.5%	776
2000	489	28.3%	307	601	32.2%	442	698	35.3%	581	782	38.7%	737	854	41.3%	870
2200	507	30.8%	358	617	34.7%	502	713	37.7%	648	802	41.6%	830	870	44.1%	969
2400	526	33.6%	418	634	37.3%	569	727	40.3%	720	818	44.5%	922	886	47.0%	1072
2600	547	36.5%	487	650	40.1%	643	742	43.0%	800	833	47.3%	1014	901	50.1%	1181
2800	569	39.7%	567	667	43.1%	726	756	46.0%	889	845	50.2%	1109	915	53.3%	1297
3000	592	43.1%	658	685	46.2%	818	770	49.1%	988	857	53.3%	1210	929	56.7%	1419
3200	616	46.8%	762	704	49.7%	923	785	52.6%	1098	867	56.5%	1319	941	60.4%	1549
3400	642	50.7%	879	723	53.4%	1041	800	56.4%	1221	877	60.1%	1438	952	64.2%	1687
3600	669	54.9%	1010	742	57.5%	1173	815	60.5%	1359	887	64.0%	1570	963	68.4%	1832
3800	697	59.4%	1157	763	61.9%	1321	831	65.1%	1511	896	68.3%	1716	972	72.8%	1986
CFM	1.2			1.4			1.6			1.8			2.0		
	RPM	SPEED %	POWER INPUT	RPM	SPEED %	POWER INPUT	RPM	SPEED %	POWER INPUT	RPM	SPEED %	POWER INPUT	RPM	SPEED %	POWER INPUT
1600	861	37.1%	750	903	38.3%	821	-	-	-	-	-	-	-	-	-
1800	879	39.8%	846	920	41.2%	923	-	-	-	-	-	-	-	-	-
2000	898	42.8%	952	939	44.3%	1041	-	-	-	-	-	-	-	-	-
2200	917	45.9%	1070	960	47.8%	1174	-	-	-	-	-	-	-	-	-
2400	936	49.3%	1198	982	51.4%	1321	-	-	-	-	-	-	-	-	-
2600	955	52.8%	1335	1004	55.3%	1480	-	-	-	-	-	-	-	-	-
2800	973	56.4%	1480	1026	59.4%	1649	-	-	-	-	-	-	-	-	-
3000	989	60.3%	1632	1048	63.6%	1825	-	-	-	-	-	-	-	-	-
3200	1005	64.3%	1788	1067	68.0%	2004	-	-	-	-	-	-	-	-	-
3400	1018	68.4%	1947	1083	72.5%	2182	-	-	-	-	-	-	-	-	-
3600	1030	72.6%	2104	1095	77.1%	2355	-	-	-	-	-	-	-	-	-
3800	1038	77.0%	2258	1102	81.8%	2518	-	-	-	-	-	-	-	-	-

Shaded area indicates air flow below 2550 SCFM (300 SCFM/ton) that is not recommended for High blower tap.
Valid motor operating range for Blower speed % setting is 20 - 90.

RPM: Blower Rotation Speed [/min]
SPEED% : Blower speed % setting value. Refer to ‘COMMISSIONING’ section for more detail.
POWER INPUT : Blower motor power consumption [W]

APPENDIX A BLOWER PERFORMANCE DATA

8.5 TON HP

8.5 TON
MODELS: DVH1023W, DVH1024W
HIGH STATIC TO 5.0HP (0.2~2.0ESP)
DOWN FLOW

CFM	0.2			0.4			0.6			0.8			1.0		
	RPM	SPEED %	POWER INPUT	RPM	SPEED %	POWER INPUT	RPM	SPEED %	POWER INPUT	RPM	SPEED %	POWER INPUT	RPM	SPEED %	POWER INPUT
1800	480	21.9%	280	582	22.8%	352	704	24.5%	553	759	25.9%	647	805	27.2%	725
2000	498	23.3%	328	600	24.5%	425	718	26.7%	633	776	28.1%	743	830	29.7%	858
2200	516	24.7%	381	618	26.2%	503	731	28.7%	716	792	30.2%	841	852	32.1%	986
2400	536	26.2%	442	636	28.0%	584	743	30.7%	801	806	32.2%	939	871	34.2%	1111
2600	556	27.9%	510	654	29.8%	670	755	32.5%	889	820	34.1%	1040	888	36.3%	1234
2800	577	29.6%	588	672	31.7%	763	768	34.4%	980	834	36.0%	1144	903	38.2%	1356
3000	599	31.5%	676	690	33.6%	863	780	36.2%	1076	847	37.9%	1252	918	40.2%	1480
3200	622	33.5%	775	709	35.6%	971	793	38.1%	1179	861	39.8%	1368	932	42.1%	1608
3400	646	35.7%	887	728	37.7%	1090	806	40.0%	1291	875	41.8%	1492	946	44.2%	1743
3600	671	38.0%	1012	749	40.0%	1220	821	42.1%	1414	889	43.9%	1627	960	46.3%	1888
3800	697	40.5%	1153	770	42.4%	1363	836	44.3%	1552	904	46.2%	1777	974	48.5%	2046
4000	724	43.1%	1311	792	45.0%	1522	853	46.7%	1707	920	48.6%	1944	989	51.0%	2220
4200	751	45.9%	1487	815	47.7%	1698	871	49.3%	1882	937	51.3%	2131	1004	53.7%	2415
CFM	1.2			1.4			1.6			1.8			2.0		
	RPM	SPEED %	POWER INPUT	RPM	SPEED %	POWER INPUT	RPM	SPEED %	POWER INPUT	RPM	SPEED %	POWER INPUT	RPM	SPEED %	POWER INPUT
1800	863	29.4%	872	912	30.6%	979	983	32.5%	1164	1031	33.8%	1296	1064	34.7%	1382
2000	891	31.9%	1026	940	32.8%	1138	1001	34.5%	1301	1046	35.7%	1432	1079	36.6%	1526
2200	915	34.2%	1173	964	35.0%	1292	1019	36.5%	1445	1063	37.8%	1581	1096	38.8%	1687
2400	937	36.4%	1315	986	37.2%	1443	1037	38.6%	1595	1080	40.0%	1743	1115	41.2%	1865
2600	955	38.5%	1453	1005	39.3%	1593	1054	40.8%	1754	1097	42.3%	1918	1134	43.6%	2061
2800	972	40.5%	1590	1023	41.5%	1744	1071	43.1%	1920	1116	44.7%	2105	1155	46.3%	2272
3000	988	42.5%	1729	1039	43.6%	1897	1088	45.4%	2096	1134	47.3%	2305	1176	49.0%	2497
3200	1002	44.5%	1871	1053	45.9%	2054	1104	47.9%	2280	1153	50.0%	2516	1197	51.9%	2736
3400	1016	46.6%	2020	1067	48.2%	2218	1120	50.5%	2475	1171	52.8%	2738	1219	54.8%	2987
3600	1030	48.8%	2178	1080	50.6%	2391	1136	53.2%	2681	1189	55.7%	2970	1239	57.9%	3247
3800	1043	51.2%	2350	1092	53.1%	2574	1151	56.0%	2897	1206	58.7%	3211	1258	61.0%	3514
4000	1057	53.7%	2536	1103	55.8%	2770	1165	59.0%	3125	1221	61.8%	3459	1275	64.3%	3785
4200	1070	56.5%	2742	1115	58.7%	2981	1179	62.0%	3365	1236	64.9%	3714	1290	67.5%	4059

HORIZONTAL FLOW

CFM	0.2			0.4			0.6			0.8			1.0		
	RPM	SPEED %	POWER INPUT	RPM	SPEED %	POWER INPUT	RPM	SPEED %	POWER INPUT	RPM	SPEED %	POWER INPUT	RPM	SPEED %	POWER INPUT
1800	483	21.9%	275	586	22.7%	345	708	24.5%	543	763	25.9%	635	809	27.2%	712
2000	501	23.3%	322	604	24.5%	418	722	26.7%	622	780	28.1%	730	834	29.7%	842
2200	519	24.7%	374	622	26.2%	493	735	28.7%	703	796	30.2%	825	856	32.0%	968
2400	538	26.2%	434	639	28.0%	573	747	30.7%	787	811	32.2%	922	875	34.2%	1091
2600	559	27.9%	501	657	29.8%	658	760	32.5%	873	825	34.1%	1021	893	36.3%	1211
2800	580	29.6%	577	675	31.6%	749	772	34.3%	962	839	36.0%	1123	908	38.2%	1331
3000	602	31.5%	663	694	33.6%	847	784	36.2%	1056	852	37.9%	1229	923	40.2%	1453
3200	625	33.5%	760	713	35.6%	953	797	38.0%	1157	866	39.8%	1342	938	42.1%	1579
3400	650	35.7%	870	732	37.7%	1069	811	40.0%	1267	880	41.8%	1464	952	44.1%	1711
3600	675	38.0%	993	753	39.9%	1197	825	42.0%	1388	894	43.9%	1597	966	46.3%	1853
3800	701	40.4%	1131	774	42.3%	1338	841	44.2%	1523	909	46.1%	1744	980	48.5%	2008
4000	728	43.1%	1286	796	44.9%	1493	857	46.6%	1675	925	48.6%	1908	994	51.0%	2179
4200	755	45.9%	1458	819	47.7%	1665	876	49.2%	1847	942	51.2%	2091	1010	53.7%	2370
CFM	1.2			1.4			1.6			1.8			2.0		
	RPM	SPEED %	POWER INPUT	RPM	SPEED %	POWER INPUT	RPM	SPEED %	POWER INPUT	RPM	SPEED %	POWER INPUT	RPM	SPEED %	POWER INPUT
1800	867	29.4%	856	917	30.6%	961	988	32.5%	1143	1037	33.8%	1273	1070	34.6%	1357
2000	896	31.9%	1007	945	32.8%	1117	1006	34.5%	1277	1052	35.7%	1406	1085	36.6%	1498
2200	920	34.2%	1151	970	35.0%	1269	1025	36.5%	1418	1069	37.8%	1552	1102	38.8%	1656
2400	942	36.4%	1291	991	37.2%	1417	1042	38.6%	1566	1086	39.9%	1711	1121	41.1%	1831
2600	961	38.5%	1427	1011	39.3%	1564	1060	40.8%	1722	1103	42.3%	1883	1141	43.6%	2023
2800	978	40.5%	1561	1028	41.4%	1712	1077	43.0%	1885	1122	44.7%	2067	1161	46.2%	2230
3000	993	42.5%	1697	1044	43.6%	1862	1094	45.4%	2057	1140	47.3%	2262	1183	49.0%	2451
3200	1008	44.5%	1837	1059	45.8%	2017	1110	47.9%	2239	1159	50.0%	2470	1204	51.8%	2686
3400	1022	46.6%	1983	1073	48.1%	2178	1126	50.5%	2430	1177	52.8%	2688	1225	54.8%	2932
3600	1036	48.8%	2138	1086	50.5%	2347	1142	53.2%	2631	1195	55.6%	2915	1246	57.9%	3187
3800	1049	51.1%	2306	1098	53.1%	2526	1157	56.0%	2844	1212	58.6%	3152	1265	61.0%	3449
4000	1062	53.7%	2490	1109	55.8%	2719	1171	58.9%	3067	1228	61.7%	3396	1282	64.2%	3716
4200	1076	56.4%	2691	1121	58.7%	2926	1185	62.0%	3303	1242	64.9%	3646	1297	67.5%	3984

Shaded area indicates air flow below 2550 SCFM (300 SCFM/ton) that is not recommended for High blower tap.
Valid motor operating range for Blower speed % setting is 20 - 90.

RPM: Blower Rotation Speed [/min]
SPEED% : Blower speed % setting value. Refer to ‘COMMISSIONING’ section for more detail.
POWER INPUT : Blower motor power consumption [W]

APPENDIX A BLOWER PERFORMANCE DATA

10 TON HP

10TON MODELS : DVH1203D, DVH1204D STANDARD STATIC TO 3.5HP (0.2~1.4ESP)

DOWN FLOW

CFM	0.2			0.4			0.6			0.8			1.0		
	RPM	SPEED %	POWER INPUT	RPM	SPEED %	POWER INPUT	RPM	SPEED %	POWER INPUT	RPM	SPEED %	POWER INPUT	RPM	SPEED %	POWER INPUT
1800	473	26.1%	280	583	29.9%	403	685	33.3%	547	769	36.4%	688	842	39.1%	819
2000	489	28.4%	323	598	32.3%	455	700	35.6%	610	789	39.3%	777	860	41.9%	917
2200	505	30.9%	373	612	34.6%	512	714	38.0%	676	805	42.0%	863	876	44.8%	1015
2400	522	33.6%	430	627	37.1%	575	728	40.5%	747	819	44.6%	948	890	47.7%	1115
2600	541	36.4%	497	643	39.8%	646	741	43.2%	824	831	47.3%	1033	903	50.7%	1219
2800	561	39.5%	573	658	42.7%	725	753	46.0%	908	842	50.0%	1122	914	53.8%	1328
3000	582	42.8%	661	675	45.8%	815	766	49.1%	1002	851	52.9%	1217	924	57.1%	1443
3200	605	46.4%	760	692	49.2%	917	778	52.5%	1108	860	56.1%	1320	933	60.6%	1566
3400	629	50.2%	874	710	52.9%	1033	791	56.2%	1225	868	59.5%	1434	942	64.4%	1698
3600	655	54.4%	1001	729	57.0%	1164	803	60.2%	1358	876	63.4%	1561	950	68.5%	1840
3800	681	58.9%	1144	749	61.5%	1312	817	64.7%	1506	885	67.7%	1704	957	73.0%	1993
4000	708	63.7%	1301	770	66.4%	1477	831	69.6%	1671	894	72.5%	1866	966	77.9%	2157
4200	736	68.9%	1474	793	71.8%	1660	849	75.1%	1854	908	77.9%	2048	976	83.2%	2331
4400	763	74.5%	1659	818	77.8%	1859	871	81.0%	2056	928	84.0%	2254	990	89.1%	2514
4600	789	80.6%	1856	845	84.3%	2072	901	87.6%	2275						
4800	813	87.0%	2060												
CFM	1.2			1.4			1.6			1.8			2.0		
	RPM	SPEED %	POWER INPUT	RPM	SPEED %	POWER INPUT	RPM	SPEED %	POWER INPUT	RPM	SPEED %	POWER INPUT	RPM	SPEED %	POWER INPUT
1800	890	40.9%	913	923	41.6%	962	-	-	-	-	-	-	-	-	-
2000	909	44.0%	1024	944	44.8%	1084	-	-	-	-	-	-	-	-	-
2200	927	47.1%	1140	965	48.2%	1220	-	-	-	-	-	-	-	-	-
2400	945	50.3%	1262	988	51.8%	1369	-	-	-	-	-	-	-	-	-
2600	961	53.6%	1389	1011	55.5%	1529	-	-	-	-	-	-	-	-	-
2800	976	57.1%	1522	1033	59.4%	1698	-	-	-	-	-	-	-	-	-
3000	991	60.6%	1661	1054	63.5%	1874	-	-	-	-	-	-	-	-	-
3200	1003	64.4%	1805	1073	67.8%	2052	-	-	-	-	-	-	-	-	-
3400	1015	68.3%	1954	1088	72.2%	2230	-	-	-	-	-	-	-	-	-
3600	1024	72.5%	2105	1099	76.8%	2401	-	-	-	-	-	-	-	-	-
3800	1031	76.9%	2257	1104	81.5%	2559	-	-	-	-	-	-	-	-	-
4000	1036	81.6%	2408	1101	86.4%	2699	-	-	-	-	-	-	-	-	-
4200	1038	86.5%	2552				-	-	-	-	-	-	-	-	-

HORIZONTAL FLOW

CFM	0.2			0.4			0.6			0.8			1.0		
	RPM	SPEED %	POWER INPUT	RPM	SPEED %	POWER INPUT	RPM	SPEED %	POWER INPUT	RPM	SPEED %	POWER INPUT	RPM	SPEED %	POWER INPUT
1800	472	25.9%	263	585	29.8%	387	683	33.0%	519	759	35.7%	640	836	38.5%	776
2000	489	28.3%	307	601	32.2%	442	698	35.3%	581	782	38.7%	737	854	41.3%	870
2200	507	30.8%	358	617	34.7%	502	713	37.7%	648	802	41.6%	830	870	44.1%	969
2400	526	33.6%	418	634	37.3%	569	727	40.3%	720	818	44.5%	922	886	47.0%	1072
2600	547	36.5%	487	650	40.1%	643	742	43.0%	800	833	47.3%	1014	901	50.1%	1181
2800	569	39.7%	567	667	43.1%	726	756	46.0%	889	845	50.2%	1109	915	53.3%	1297
3000	592	43.1%	658	685	46.2%	818	770	49.1%	988	857	53.3%	1210	929	56.7%	1419
3200	616	46.8%	762	704	49.7%	923	785	52.6%	1098	867	56.5%	1319	941	60.4%	1549
3400	642	50.7%	879	723	53.4%	1041	800	56.4%	1221	877	60.1%	1438	952	64.2%	1687
3600	669	54.9%	1010	742	57.5%	1173	815	60.5%	1359	887	64.0%	1570	963	68.4%	1832
3800	697	59.4%	1157	763	61.9%	1321	831	65.1%	1511	896	68.3%	1716	972	72.8%	1986
4000	725	64.3%	1317	785	66.7%	1485	847	70.0%	1680	907	73.2%	1880	981	77.6%	2146
4200	753	69.5%	1492	808	72.0%	1665	866	75.4%	1866	921	78.6%	2064	989	82.7%	2311
4400	780	75.1%	1680	832	77.8%	1860	887	81.4%	2067	941	84.7%	2268	997	88.2%	2479
4600	805	81.0%	1878	857	84.0%	2069	913	87.8%	2283						
4800	828	87.3%	2082												
CFM	1.2			1.4			1.6			1.8			2.0		
	RPM	SPEED %	POWER INPUT	RPM	SPEED %	POWER INPUT	RPM	SPEED %	POWER INPUT	RPM	SPEED %	POWER INPUT	RPM	SPEED %	POWER INPUT
1800	879	39.8%	846	920	41.2%	923	-	-	-	-	-	-	-	-	-
2000	898	42.8%	952	939	44.3%	1041	-	-	-	-	-	-	-	-	-
2200	917	45.9%	1070	960	47.8%	1174	-	-	-	-	-	-	-	-	-
2400	936	49.3%	1198	982	51.4%	1321	-	-	-	-	-	-	-	-	-
2600	955	52.8%	1335	1004	55.3%	1480	-	-	-	-	-	-	-	-	-
2800	973	56.4%	1480	1026	59.4%	1649	-	-	-	-	-	-	-	-	-
3000	989	60.3%	1632	1048	63.6%	1825	-	-	-	-	-	-	-	-	-
3200	1005	64.3%	1788	1067	68.0%	2004	-	-	-	-	-	-	-	-	-
3400	1018	68.4%	1947	1083	72.5%	2182	-	-	-	-	-	-	-	-	-
3600	1030	72.6%	2104	1095	77.1%	2355	-	-	-	-	-	-	-	-	-
3800	1038	77.0%	2258	1102	81.8%	2518	-	-	-	-	-	-	-	-	-
4000	1043	81.5%	2405	1102	86.5%	2666	-	-	-	-	-	-	-	-	-
4200	1044	86.1%	2540				-	-	-	-	-	-	-	-	-

Shaded area indicates air flow below 3000 SCFM (300 SCFM/ton) that is not recommended for High blower tap.

Valid motor operating range for Blower speed % setting is 20 - 90.

RPM: Blower Rotation Speed [/min]

SPEED% : Blower speed % setting value. Refer to ‘COMMISSIONING’ section for more detail.

POWER INPUT : Blower motor power consumption [W]

APPENDIX A BLOWER PERFORMANCE DATA
10 TON HP

10 TON MODELS: DVH1203W, DVH1204W HIGH STATIC TO 5.0HP (0.2~2.0ESP)
DOWN FLOW

CFM	0.2			0.4			0.6			0.8			1.0		
	RPM	SPEED %	POWER INPUT	RPM	SPEED %	POWER INPUT	RPM	SPEED %	POWER INPUT	RPM	SPEED %	POWER INPUT	RPM	SPEED %	POWER INPUT
1800	480	21.9%	280	582	22.8%	352	704	24.5%	553	759	25.9%	647	805	27.2%	725
2000	498	23.3%	328	600	24.5%	425	718	26.7%	633	776	28.1%	743	830	29.7%	858
2200	516	24.7%	381	618	26.2%	503	731	28.7%	716	792	30.2%	841	852	32.1%	986
2400	536	26.2%	442	636	28.0%	584	743	30.7%	801	806	32.2%	939	871	34.2%	1111
2600	556	27.9%	510	654	29.8%	670	755	32.5%	889	820	34.1%	1040	888	36.3%	1234
2800	577	29.6%	588	672	31.7%	763	768	34.4%	980	834	36.0%	1144	903	38.2%	1356
3000	599	31.5%	676	690	33.6%	863	780	36.2%	1076	847	37.9%	1252	918	40.2%	1480
3200	622	33.5%	775	709	35.6%	971	793	38.1%	1179	861	39.8%	1368	932	42.1%	1608
3400	646	35.7%	887	728	37.7%	1090	806	40.0%	1291	875	41.8%	1492	946	44.2%	1743
3600	671	38.0%	1012	749	40.0%	1220	821	42.1%	1414	889	43.9%	1627	960	46.3%	1888
3800	697	40.5%	1153	770	42.4%	1363	836	44.3%	1552	904	46.2%	1777	974	48.5%	2046
4000	724	43.1%	1311	792	45.0%	1522	853	46.7%	1707	920	48.6%	1944	989	51.0%	2220
4200	751	45.9%	1487	815	47.7%	1698	871	49.3%	1882	937	51.3%	2131	1004	53.7%	2415
4400	779	49.0%	1682	838	50.7%	1892	891	52.2%	2082	955	54.2%	2340	1020	56.7%	2632
4600	808	52.2%	1898	863	53.9%	2107	913	55.4%	2309	974	57.4%	2575	1036	60.0%	2876
4800	837	55.6%	2135	889	57.3%	2345	937	58.9%	2565	995	61.0%	2838	1053	63.7%	3149
5000	866	59.3%	2395	915	61.0%	2608	963	62.8%	2854	1016	64.9%	3129	1071	67.7%	3453
CFM	1.2			1.4			1.6			1.8			2.0		
	RPM	SPEED %	POWER INPUT	RPM	SPEED %	POWER INPUT	RPM	SPEED %	POWER INPUT	RPM	SPEED %	POWER INPUT	RPM	SPEED %	POWER INPUT
1800	863	29.4%	872	912	30.6%	979	983	32.5%	1164	1031	33.8%	1296	1064	34.7%	1382
2000	891	31.9%	1026	940	32.8%	1138	1001	34.5%	1301	1046	35.7%	1432	1079	36.6%	1526
2200	915	34.2%	1173	964	35.0%	1292	1019	36.5%	1445	1063	37.8%	1581	1096	38.8%	1687
2400	937	36.4%	1315	986	37.2%	1443	1037	38.6%	1595	1080	40.0%	1743	1115	41.2%	1865
2600	955	38.5%	1453	1005	39.3%	1593	1054	40.8%	1754	1097	42.3%	1918	1134	43.6%	2061
2800	972	40.5%	1590	1023	41.5%	1744	1071	43.1%	1920	1116	44.7%	2105	1155	46.3%	2272
3000	988	42.5%	1729	1039	43.6%	1897	1088	45.4%	2096	1134	47.3%	2305	1176	49.0%	2497
3200	1002	44.5%	1871	1053	45.9%	2054	1104	47.9%	2280	1153	50.0%	2516	1197	51.9%	2736
3400	1016	46.6%	2020	1067	48.2%	2218	1120	50.5%	2475	1171	52.8%	2738	1219	54.8%	2987
3600	1030	48.8%	2178	1080	50.6%	2391	1136	53.2%	2681	1189	55.7%	2970	1239	57.9%	3247
3800	1043	51.2%	2350	1092	53.1%	2574	1151	56.0%	2897	1206	58.7%	3211	1258	61.0%	3514
4000	1057	53.7%	2536	1103	55.8%	2770	1165	59.0%	3125	1221	61.8%	3459	1275	64.3%	3785
4200	1070	56.5%	2742	1115	58.7%	2981	1179	62.0%	3365	1236	64.9%	3714	1290	67.5%	4059
4400	1083	59.5%	2969	1126	61.8%	3210	1192	65.3%	3618	1248	68.2%	3974			
4600	1097	62.9%	3220	1137	65.1%	3460	1204	68.7%	3883	1258	71.5%	4237			
4800	1110	66.6%	3497	1150	68.7%	3734	1215	72.2%	4160						
5000	1124	70.7%	3801	1165	72.6%	4035									

Shaded area indicates air flow below 3000 SCFM (300 SCFM/ton) that is not recommended for High blower tap.
Valid motor operating range for Blower speed % setting is 20 - 90.
RPM: Blower Rotation Speed [/min]
SPEED% : Blower speed % setting value. Refer to 'COMMISSIONING' section for more detail.
POWER INPUT : Blower motor power consumption [W]

APPENDIX A BLOWER PERFORMANCE DATA
10 TON HP

HORIZONTAL FLOW

CFM	0.2			0.4			0.6			0.8			1.0		
	RPM	SPEED %	POWER INPUT	RPM	SPEED %	POWER INPUT	RPM	SPEED %	POWER INPUT	RPM	SPEED %	POWER INPUT	RPM	SPEED %	POWER INPUT
1800	483	21.9%	275	586	22.7%	345	708	24.5%	543	763	25.9%	635	809	27.2%	712
2000	501	23.3%	322	604	24.5%	418	722	26.7%	622	780	28.1%	730	834	29.7%	842
2200	519	24.7%	374	622	26.2%	493	735	28.7%	703	796	30.2%	825	856	32.0%	968
2400	538	26.2%	434	639	28.0%	573	747	30.7%	787	811	32.2%	922	875	34.2%	1091
2600	559	27.9%	501	657	29.8%	658	760	32.5%	873	825	34.1%	1021	893	36.3%	1211
2800	580	29.6%	577	675	31.6%	749	772	34.3%	962	839	36.0%	1123	908	38.2%	1331
3000	602	31.5%	663	694	33.6%	847	784	36.2%	1056	852	37.9%	1229	923	40.2%	1453
3200	625	33.5%	760	713	35.6%	953	797	38.0%	1157	866	39.8%	1342	938	42.1%	1579
3400	650	35.7%	870	732	37.7%	1069	811	40.0%	1267	880	41.8%	1464	952	44.1%	1711
3600	675	38.0%	993	753	39.9%	1197	825	42.0%	1388	894	43.9%	1597	966	46.3%	1853
3800	701	40.4%	1131	774	42.3%	1338	841	44.2%	1523	909	46.1%	1744	980	48.5%	2008
4000	728	43.1%	1286	796	44.9%	1493	857	46.6%	1675	925	48.6%	1908	994	51.0%	2179
4200	755	45.9%	1458	819	47.7%	1665	876	49.2%	1847	942	51.2%	2091	1010	53.7%	2370
4400	783	48.9%	1650	843	50.6%	1856	896	52.1%	2043	960	54.2%	2296	1025	56.6%	2583
4600	812	52.1%	1862	868	53.8%	2067	918	55.3%	2265	980	57.4%	2526	1042	59.9%	2822
4800	841	55.6%	2094	893	57.2%	2300	942	58.8%	2516	1000	60.9%	2784	1059	63.6%	3090
5000	870	59.2%	2348	919	60.9%	2558	968	62.7%	2799	1022	64.8%	3069	1077	67.7%	3388
CFM	1.2			1.4			1.6			1.8			2.0		
	RPM	SPEED %	POWER INPUT	RPM	SPEED %	POWER INPUT	RPM	SPEED %	POWER INPUT	RPM	SPEED %	POWER INPUT	RPM	SPEED %	POWER INPUT
1800	867	29.4%	856	917	30.6%	961	988	32.5%	1143	1037	33.8%	1273	1070	34.6%	1357
2000	896	31.9%	1007	945	32.8%	1117	1006	34.5%	1277	1052	35.7%	1406	1085	36.6%	1498
2200	920	34.2%	1151	970	35.0%	1269	1025	36.5%	1418	1069	37.8%	1552	1102	38.8%	1656
2400	942	36.4%	1291	991	37.2%	1417	1042	38.6%	1566	1086	39.9%	1711	1121	41.1%	1831
2600	961	38.5%	1427	1011	39.3%	1564	1060	40.8%	1722	1103	42.3%	1883	1141	43.6%	2023
2800	978	40.5%	1561	1028	41.4%	1712	1077	43.0%	1885	1122	44.7%	2067	1161	46.2%	2230
3000	993	42.5%	1697	1044	43.6%	1862	1094	45.4%	2057	1140	47.3%	2262	1183	49.0%	2451
3200	1008	44.5%	1837	1059	45.8%	2017	1110	47.9%	2239	1159	50.0%	2470	1204	51.8%	2686
3400	1022	46.6%	1983	1073	48.1%	2178	1126	50.5%	2430	1177	52.8%	2688	1225	54.8%	2932
3600	1036	48.8%	2138	1086	50.5%	2347	1142	53.2%	2631	1195	55.6%	2915	1246	57.9%	3187
3800	1049	51.1%	2306	1098	53.1%	2526	1157	56.0%	2844	1212	58.6%	3152	1265	61.0%	3449
4000	1062	53.7%	2490	1109	55.8%	2719	1171	58.9%	3067	1228	61.7%	3396	1282	64.2%	3716
4200	1076	56.4%	2691	1121	58.7%	2926	1185	62.0%	3303	1242	64.9%	3646	1297	67.5%	3984
4400	1089	59.5%	2914	1132	61.8%	3150	1198	65.2%	3551	1255	68.1%	3901	1308	70.8%	4251
4600	1103	62.8%	3160	1144	65.1%	3395	1210	68.6%	3811	1265	71.5%	4159			
4800	1116	66.6%	3432	1156	68.6%	3664	1222	72.2%	4083						
5000	1130	70.7%	3730	1171	72.5%	3959									

Shaded area indicates air flow below 3000 SCFM (300 SCFM/ton) that is not recommended for High blower tap.
Valid motor operating range for Blower speed % setting is 20 - 90.
RPM: Blower Rotation Speed [/min]
SPEED% : Blower speed % setting value. Refer to 'COMMISSIONING' section for more detail.
POWER INPUT : Blower motor power consumption [W]

APPENDIX B ELECTRICAL DATA

ELECTRICAL DATA

Model Number	Electrical Rating	Compressor & Outdoor Fan Motor			Indoor Fan Motor			Optional Electric Heat			Optional Powered Convienience Outlet	Optional Power Exhaust (*NOTE)	Power Supply	
		Qty (Comp)	Qty (Fan Motor)	Input Current	Qty	HP	MOC	Part #	KW*	FLA	FLA	FLA	MCA	MOP
DVH0903D	208/230/3/60	1	2	27.30/24.70	1	3.5	11.7	-	-	-	-	-	49.9/49.9	60/60
								-	-	-	9.6/8.7	-	59.5/58.6	70/70
								-	-	-	-	3.3/3.0 (2.4)	54.0/53.6	60/60
								-	-	-	9.6/8.7	3.3/3.0 (2.4)	63.6/62.3	70/70
								EH*D-3M15	11.3/15.0	31.3/36.1	-	-	88.9/95.0	100/100
											9.6/8.7	-	98.5/104	110/110
											-	3.3/3.0 (2.4)	93.1/98.7	100/100
											9.6/8.7	3.3/3.0 (2.4)	103/107	110/110
								EH*D-3M30	21.6/28.8	60.0/69.3	-	-	125/136	125/150
											9.6/8.7	-	135/145	150/150
											-	3.3/3.0 (2.4)	129/140	150/150
											9.6/8.7	3.3/3.0 (2.4)	139/149	150/150
								EH*D-3M45	33.8/45.0	93.8/108	-	-	167/185	175/200
											9.6/8.7	-	177/194	200/200
											-	3.3/3.0 (2.4)	171/189	175/200
											9.6/8.7	3.3/3.0 (2.4)	181/198	200/200
DVH0903W	208/230/3/60	1	2	27.30/24.70	1	3.5	11.7	-	-	-	-	-	49.9/49.9	60/60
								-	-	-	9.6/8.7	-	59.5/58.6	70/70
								-	-	-	-	3.3/3.0 (2.4)	54.0/53.6	60/60
								-	-	-	9.6/8.7	3.3/3.0 (2.4)	63.6/62.3	70/70
								EH*D-3M15	11.3/15.0	31.3/36.1	-	-	88.9/95.0	100/100
											9.6/8.7	-	98.5/104	110/110
											-	3.3/3.0 (2.4)	93.1/98.7	100/100
											9.6/8.7	3.3/3.0 (2.4)	103/107	110/110
								EH*D-3M30	21.6/28.8	60.0/69.3	-	-	125/136	125/150
											9.6/8.7	-	135/145	150/150
											-	3.3/3.0 (2.4)	129/140	150/150
											9.6/8.7	3.3/3.0 (2.4)	139/149	150/150
								EH*D-3M45	33.8/45.0	93.8/108	-	-	167/185	175/200
											9.6/8.7	-	177/194	200/200
											-	3.3/3.0 (2.4)	171/189	175/200
											9.6/8.7	3.3/3.0 (2.4)	181/198	200/200
DVH0904D	460/3/60	1	2	12	1	3.5	7.2	-	-	-	-	-	24.8	30
								-	-	-	4.3	-	29.1	35
								-	-	-	-	1.2 (1.0)	26.3	30
								-	-	-	4.3	1.2 (1.0)	30.6	35
								EH*D-4M15	15	18	-	-	47.3	50
											4.3	-	51.6	60
											-	1.2 (1.0)	48.8	50
											4.3	1.2 (1.0)	53.1	60
								EH*D-4M30	28.8	34.6	-	-	68.1	70
											4.3	-	72.4	80
											-	1.2 (1.0)	69.6	70
											4.3	1.2 (1.0)	73.9	80
								EH*D-4M45	45	54.1	-	-	92.4	100
											4.3	-	96.7	100
											-	1.2 (1.0)	93.9	100
											4.3	1.2 (1.0)	98.2	100
DVH0904W	460/3/60	1	2	12	1	3.5	7.2	-	-	-	-	-	24.8	30
								-	-	-	4.3	-	29.1	35
								-	-	-	-	1.2 (1.0)	26.3	30
								-	-	-	4.3	1.2 (1.0)	30.6	35
								EH*D-4M15	15	18	-	-	47.3	50
											4.3	-	51.6	60
											-	1.2 (1.0)	48.8	50
											4.3	1.2 (1.0)	53.1	60
								EH*D-4M30	28.8	34.6	-	-	68.1	70
											4.3	-	72.4	80
											-	1.2 (1.0)	69.6	70
											4.3	1.2 (1.0)	73.9	80
								EH*D-4M45	45	54.1	-	-	92.4	100
											4.3	-	96.7	100
											-	1.2 (1.0)	93.9	100
											4.3	1.2 (1.0)	98.2	100

***NOTE: Use higher value for calculation of MCA. Use lower value for calculation of MOP**

APPENDIX B ELECTRICAL DATA

ELECTRICAL DATA

Model Number	Electrical Rating	Compressor & Outdoor Fan Motor			Indoor Fan Motor			Optional Electric Heat			Optional Powered Convienience Outlet	Optional Power Exhaust (*NOTE)	Power Supply	
		Qty (Comp)	Qty (Fan Motor)	Input Current	Qty	HP	MOC	Part #	KW*	FLA	FLA	FLA	MCA	MOP
DVH1023D	208/230/3/60	1	2	32.10/29.20	1	3.5	11.7	-	-	-	-	-	52.7/52.7	60/60
								-	-	-	9.6/8.7	-	62.3/61.4	70/70
								-	-	-	-	3.3/3.0 (2.4)	56.9/56.5	70/70
								-	-	-	9.6/8.7	3.3/3.0 (2.4)	66.5/65.2	80/80
								EH*D-3M15	11.3/15.0	31.3/36.1	-	-	91.8/97.8	100/110
											9.6/8.7	-	101/107	110/110
											-	3.3/3.0 (2.4)	96.0/102	100/110
											9.6/8.7	3.3/3.0 (2.4)	106/110	110/125
								EH*D-3M30	21.6/28.8	60.0/69.3	-	-	128/139	150/150
											9.6/8.7	-	137/148	150/150
											-	3.3/3.0 (2.4)	132/143	150/150
											9.6/8.7	3.3/3.0 (2.4)	142/152	150/175
								EH*D-3M45	33.8/45.0	93.8/108	-	-	170/188	175/200
											9.6/8.7	-	180/197	200/200
											-	3.3/3.0 (2.4)	174/192	175/200
											9.6/8.7	3.3/3.0 (2.4)	184/200	200/225
DVH1023W	208/230/3/60	1	2	32.10/29.20	1	5	15.1	-	-	-	-	-	56.5/56.5	70/70
								-	-	-	9.6/8.7	-	66.1/65.2	80/80
								-	-	-	-	3.3/3.0 (2.4)	60.6/60.2	70/70
								-	-	-	9.6/8.7	3.3/3.0 (2.4)	70.2/68.9	80/80
								EH*D-3M15	11.3/15.0	31.3/36.1	-	-	95.5/102	100/110
											9.6/8.7	-	105/110	125/125
											-	3.3/3.0 (2.4)	99.7/105	110/110
											9.6/8.7	3.3/3.0 (2.4)	109/114	125/125
								EH*D-3M30	21.6/28.8	60.0/69.3	-	-	132/143	150/150
											9.6/8.7	-	141/152	150/175
											-	3.3/3.0 (2.4)	136/147	150/150
											9.6/8.7	3.3/3.0 (2.4)	145/156	150/175
								EH*D-3M45	33.8/45.0	93.8/108	-	-	174/192	175/200
											9.6/8.7	-	183/200	200/225
											-	3.3/3.0 (2.4)	178/196	200/200
											9.6/8.7	3.3/3.0 (2.4)	187/204	200/225
DVH1024D	460/3/60	1	2	14.2	1	3.5	7.2	-	-	-	-	-	26.0	30
								-	-	-	4.3	-	30.3	35
								-	-	-	-	1.2 (1.0)	27.5	35
								-	-	-	4.3	1.2 (1.0)	31.8	35
								EH*D-4M15	15	18	-	-	48.5	50
											4.3	-	52.8	60
											-	1.2 (1.0)	50.0	60
											4.3	1.2 (1.0)	54.3	60
								EH*D-4M30	28.8	34.6	-	-	69.3	70
											4.3	-	73.6	80
											-	1.2 (1.0)	70.8	80
											4.3	1.2 (1.0)	75.1	80
								EH*D-4M45	45	54.1	-	-	93.6	100
											4.3	-	97.9	100
											-	1.2 (1.0)	95.1	100
											4.3	1.2 (1.0)	99.4	100
DVH1024W	460/3/60	1	2	14.2	1	5	10.6	-	-	-	-	-	29.7	35
								-	-	-	4.3	-	34.0	40
								-	-	-	-	1.2 (1.0)	31.2	35
								-	-	-	4.3	1.2 (1.0)	35.5	40
								EH*D-4M15	15	18	-	-	52.3	60
											4.3	-	56.6	60
											-	1.2 (1.0)	53.8	60
											4.3	1.2 (1.0)	58.1	60
								EH*D-4M30	28.8	34.6	-	-	73.0	80
											4.3	-	77.3	80
											-	1.2 (1.0)	74.5	80
											4.3	1.2 (1.0)	78.8	80
								EH*D-4M45	45	54.1	-	-	97.4	100
											4.3	-	102	110
											-	1.2 (1.0)	98.9	100
											4.3	1.2 (1.0)	103	110

***NOTE: Use higher value for calculation of MCA. Use lower value for calculation of MOP**

APPENDIX B ELECTRICAL DATA

ELECTRICAL DATA

Model Number	Electrical Rating	Compressor & Outdoor Fan Motor			Indoor Fan Motor			Optional Electric Heat			Optional Powered Convienience Outlet	Optional Power Exhaust (*NOTE)	Power Supply	
		Qty (Comp)	Qty (Fan Motor)	Input Current	Qty	HP	MOC	Part #	KW*	FLA	FLA	FLA	MCA	MOP
DVH1203D	208/230/3/60	1	2	32.70/29.60	1	3.5	11.7	-	-	-	-	-	54.0/54.0	70/70
								-	-	-	9.6/8.7	-	63.6/62.7	80/70
								-	-	-	-	3.3/3.0 (2.4)	58.2/57.8	70/70
								-	-	-	9.6/8.7	3.3/3.0 (2.4)	67.8/66.5	80/80
								EH*D-3M15	11.3/15.0	31.3/36.1	-	-	93.1/99.1	100/110
											9.6/8.7	-	103/108	110/110
											-	3.3/3.0 (2.4)	97.3/103	110/110
											9.6/8.7	3.3/3.0 (2.4)	107/112	110/125
								EH*D-3M30	21.6/28.8	60.0/69.3	-	-	129/141	150/150
											9.6/8.7	-	139/149	150/150
											-	3.3/3.0 (2.4)	133/144	150/150
											9.6/8.7	3.3/3.0 (2.4)	143/153	150/175
								EH*D-3M45	33.8/45.0	93.8/108	-	-	171/189	175/200
											9.6/8.7	-	181/198	200/200
											-	3.3/3.0 (2.4)	175/193	200/200
											9.6/8.7	3.3/3.0 (2.4)	185/202	200/225
DVH1203W	208/230/3/60	1	2	32.70/29.60	1	5	15.1	-	-	-	-	-	57.8/57.8	70/70
								-	-	-	9.6/8.7	-	67.4/66.5	80/80
								-	-	-	-	3.3/3.0 (2.4)	61.9/61.5	70/70
								-	-	-	9.6/8.7	3.3/3.0 (2.4)	71.5/70.2	80/80
								EH*D-3M15	11.3/15.0	31.3/36.1	-	-	96.9/103	110/110
											9.6/8.7	-	106/112	125/125
											-	3.3/3.0 (2.4)	101/107	110/110
											9.6/8.7	3.3/3.0 (2.4)	111/115	125/125
								EH*D-3M30	21.6/28.8	60.0/69.3	-	-	133/144	150/150
											9.6/8.7	-	142/153	150/175
											-	3.3/3.0 (2.4)	137/148	150/150
											9.6/8.7	3.3/3.0 (2.4)	147/157	150/175
								EH*D-3M45	33.8/45.0	93.8/108	-	-	175/193	200/200
											9.6/8.7	-	185/202	200/225
											-	3.3/3.0 (2.4)	179/197	200/200
											9.6/8.7	3.3/3.0 (2.4)	189/206	200/225
DVH1204D	460/3/60	1	2	14.5	1	3.5	7.2	-	-	-	-	-	26.5	35
								-	-	-	4.3	-	30.8	35
								-	-	-	-	1.2 (1.0)	28.0	35
								-	-	-	4.3	1.2 (1.0)	32.3	40
								EH*D-4M15	15	18	-	-	49.1	50
											4.3	-	53.4	60
											-	1.2 (1.0)	50.6	60
											4.3	1.2 (1.0)	54.9	60
								EH*D-4M30	28.8	34.6	-	-	69.8	70
											4.3	-	74.1	80
											-	1.2 (1.0)	71.3	80
											4.3	1.2 (1.0)	75.6	80
								EH*D-4M45	45	54.1	-	-	94.2	100
											4.3	-	98.5	100
											-	1.2 (1.0)	95.7	100
											4.3	1.2 (1.0)	100.0	100
DVH1204W	460/3/60	1	2	14.5	1	5	10.6	-	-	-	-	-	30.3	35
								-	-	-	4.3	-	34.6	40
								-	-	-	-	1.2 (1.0)	31.8	40
								-	-	-	4.3	1.2 (1.0)	36.1	40
								EH*D-4M15	15	18	-	-	52.8	60
											4.3	-	57.1	60
											-	1.2 (1.0)	54.3	60
											4.3	1.2 (1.0)	58.6	60
								EH*D-4M30	28.8	34.6	-	-	73.6	80
											4.3	-	77.9	80
											-	1.2 (1.0)	75.1	80
											4.3	1.2 (1.0)	79.4	80
								EH*D-4M45	45	54.1	-	-	97.9	100
											4.3	-	102	110
											-	1.2 (1.0)	99.4	100
											4.3	1.2 (1.0)	104	110

***NOTE: Use higher value for calculation of MCA. Use lower value for calculation of MOP**

APPENDIX C UNIT DIMENSIONS

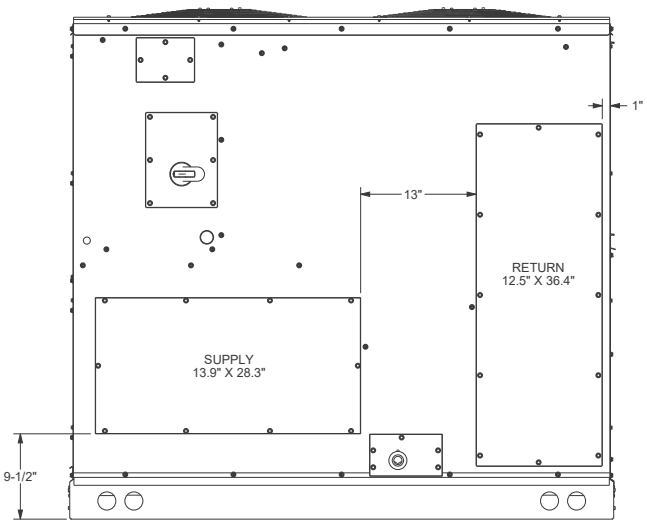

Horizontal Discharge
Figure 13

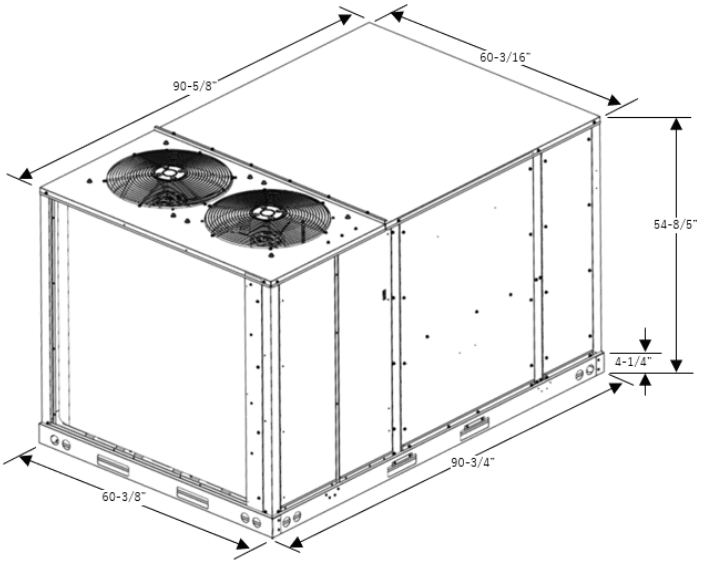

Figure 14

NOTE

For horizontal discharge, remove supply and return duct cover panels from the end of the unit. Save all washered screws. According to the model size, remove (6 or 8) factory supplied panel clips that are secured to the base pan, behind the filter access panel. With the insulated side of the panel facing up, attach the clips. Place the provided gasket material completely around the perimeter of the clip side on both panels. Place the assembled panels over the supply and return duct openings in the base pan and push down to snap panels into place. Ensure the panel is evenly seated on the flanges around the duct openings and the gasket is creating a good seal.

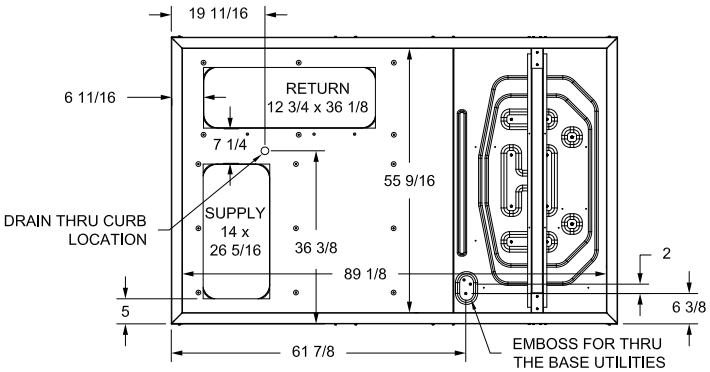

Vertical Discharge (Bottom of Unit)
Figure 15

NOTE: Refer to IOD-7082 included in the literature pack for installing horizontal duct covers.

APPENDIX D MIN-MAX AIRFLOW

AIR FLOW FOR ELECTRIC HEAT				
UNIT	HEATER KIT MODEL NUMBER	Kw	MINIMUM CFM	MAXIMUM CFM
7.5 ton	EH*D-*M15	15	2500	4225
	EH*D-*M30	30		
	EH*D-*M45	45		
8.5 ton	EH*D-*M15	15	2750	4425
	EH*D-*M30	30		
	EH*D-*M45	45		
10 ton	EH*D-*M15	15	3200	5275
	EH*D-*M30	30		
	EH*D-*M45	45		

HEATER KIT MODEL NUMBER NOMENCLATURE

EH	X	D	-	3	M	15
1	2	3		4	5	6, 7

Electric

Heater

- **X** Staged
- **S** SCR (modulating)

Drive System

- **B** Belt Drive
- **D** Direct Drive

Voltage

- **1** 208-230/1/60 Single phase 60 Hz
- **3** 208-230/3/60 Three phase 60 Hz
- **4** 460/3/60 Three phase 60 Hz
- **7** 575/3/60 Three phase 60 Hz

Chassis

- **S** Small
- **M** Medium
- **L** Large

Kilowatt

- **10** 10 KW
- **15** 15 KW
- **20** 20 KW
- **30** 30 KW
- **45** 45 KW
- **60** 60 KW

NOTE: ELECTRIC HEAT KIT INSTALLATIONS WHERE LINE VOLTAGE IS GREATER THAN 106% OF NOMINAL MAY REQUIRE ADDITIONAL AIRFLOW TO AVOID NUISANCE TRIPPING OF THE PRIMARY THERMAL LIMITS

MODELS	COOLING MINIMUM SCFM	COOLING MAXIMUM SCFM
DVH090	2500	4225
DVH102	2750	4425
DVH120	3200	5275

APPENDIX E INPUT/OUTPUT SPECIFICATION FOR FIELD WIRING

PLACE	WIRE SIZE (AWG)	PIN	FEATURES	ELECTRICAL SPECIFICATIONS	LOGIC
ES	–	–	EMERGENCY SHUTDOWN	Dry input(Unit provides 24VAC,the switch must be dry contacts). Units provides output at least 15mA.	Normally closed, Abnormally opened.
TB-S1 or S2 TB-CO2 TB-C	–	S1 or S2:24VAC CO2:0-10V C :COM	CARBON DIOXIDE SENSOR	Input impedance is 100kΩ or more.	DC 0-10V = 0…2000ppm from sensor.
TB-S1 or S2 TB-OAH TB-C	–	S1 or S2:24VAC OAH:0-10V C :COM	OUTDOOR AIR HUMIDITY	Input impedance is 100kΩ or more.	DC 0-10V = 0…100%RH from sensor.
TB-OAT	–	–	OUTDOOR AIR TEMPERATURE	TYPE III Thermistor	
TB-S1 or S2 TB-RAH TB-C	–	S1 or S2:24VAC RAH:0-10V C :COM	RETURN AIR HUMDITY	Input impedance is 100kΩ or more.	DC 0-10V = 0…100%RH from sensor.
TB-RAT	–	–	RETURN AIR TEMPERATURE	TYPE III Thermistor	
TB-SAT	–	–	SUPPLY AIR TEMPERATURE	TYPE III Thermistor	
TB-F1,F2	–	–	D3 NET WORK	–(Use the recommended controller)	
TB-P1,P2	–	–	REMOTE CONTROLLER	–(Use the recommended controller(BRC))	
A8P-X8M	16-24	1:24V 2:0-10V 3;GND	DUCT STATIC PRESSURE SENSOR	Input impedance is 100kΩ or more.	DC 0-10V = 0…2.5“ from sensor.
A8P-X6M	16-24	1,2	DIRTY FILTER SWITCH	Dry input(Unit provides 24VAC,the switch must be dry contacts). Units provides output at least 15mA.	Normally opened, abnormally closed.
		3,4	OVERFLOW SWITCH		Normally closed, Abnormally opened.
		5,6	OCCUPANCY SWITCH		On request closed, Off request opened.
		7,8	HIGH DUCT STATIC SWITCH		Normally closed, Abnormally opened.
A8P-X5M	16-24	1,2	T1T2 INPUT	Unit provides 16VDC, Switch must be dry contacts. Units provides output at least 10mA.	See ″External ON/OFF Setting″
A8P-X4M	16-24	1,2	ALARM	Dry contacts output. Allowable AC Voltage: 30V or lower. Allowable DC Voltage: 30V or lower. Allowable current is 10mA to 100mA. COM line of the signal must be grounded.	Normally opened, Alarm closed.
		3,4	MAINTENANCE ALARM		Normally opened, Alarm closed.
		5,6	ECON ALARM		Normally opened, Alarm closed.
		7,8	REF ALARM		Normally opened, Alarm closed.
A8P-X801A	–	–	DG CONNECT	–(Use the recommended DG connect)	
BACNET-X2M	–	–	BACNET	See “Submittal Data Sheet of BACnet Communication″	

WIRING DIAGRAM

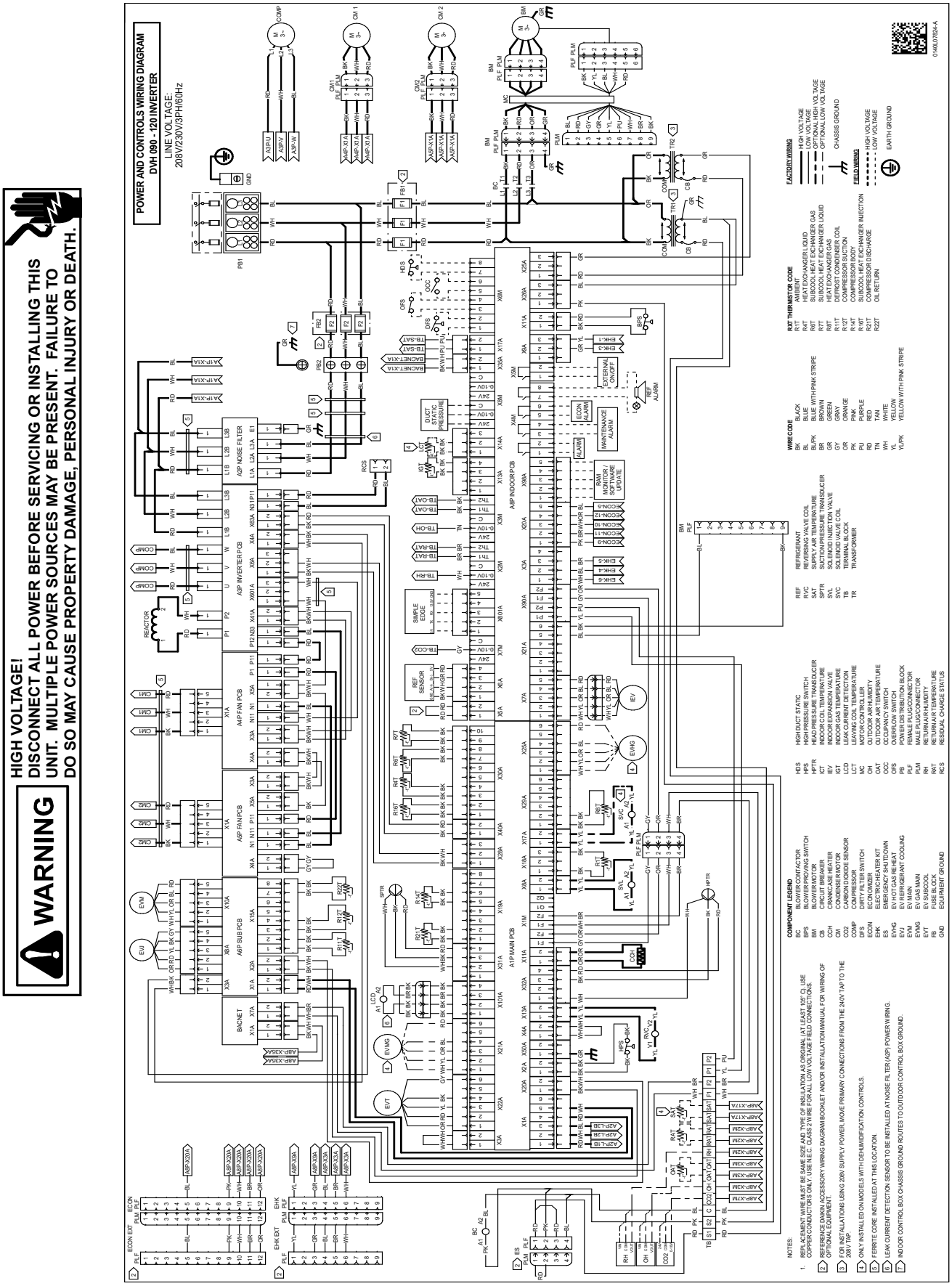
WARNING
HIGH VOLTAGE!
DISCONNECT ALL POWER BEFORE SERVICING OR INSTALLING THIS UNIT. MULTIPLE POWER SOURCES MAY BE PRESENT. FAILURE TO DO SO MAY CAUSE PROPERTY DAMAGE, PERSONAL INJURY OR DEATH.
POWER AND CONTROLS WIRING DIAGRAM
DVH 090 - 120 INVERTER
LINE VOLTAGE:
208V/230V/3PH/60Hz
COMPONENT LEGEND
NOTES:
1. REPLACEMENT WIRE MUST BE SAME SIZE AND TYPE OF INSULATION AS ORIGINAL (AT LEAST 105° C). USE COPPER CONDUCTORS ONLY. USE N.E.C. CLASS 2 WIRE FOR ALL LOW VOLTAGE FIELD CONNECTIONS.
2. REFERENCE DAIKIN ACCESSORY WIRING DIAGRAM BOOKLET AND/OR INSTALLATION MANUAL FOR WIRING OF OPTIONAL EQUIPMENT.
3. FOR INSTALLATIONS USING 208V SUPPLY POWER, MOVE PRIMARY CONNECTIONS FROM THE 240V TAP TO THE 208V TAP.
4. ONLY INSTALLED ON MODELS WITH DEHUMIDIFICATION CONTROLS.
5. FERRITE CORE INSTALLED AT THIS LOCATION.
6. LEAK CURRENT DETECTION SENSOR TO BE INSTALLED AT NOISE FILTER (A2P) POWER WIRING.
7. INDOOR CONTROL BOX CHASSIS GROUND ROUTES TO OUTDOOR CONTROL BOX GROUND.
FACTORY WIRING
FIELD WIRING
HIGH VOLTAGE
LOW VOLTAGE
OPTIONAL HIGH VOLTAGE
OPTIONAL LOW VOLTAGE
CHASSIS GROUND
HIGH VOLTAGE
LOW VOLTAGE
EARTH GROUND
R/T THERMISTOR CODE
WIRE CODE
BACNET
A3P SUB PCB
A4P FAN PCB
A5P FAN PCB
A1P MAIN PCB
A3P INVERTER PCB
A6P NOISE FILTER
A8P INDOOR PCB
SIMPLE EDGE
REF SENSOR
DUCT STATIC PRESSURE
MAINTENANCE ALARM
ECON ALARM
EXTERNAL ON/OFF
REF ALARM
RAM MONITOR / SOFTWARE UPDATE
REACTOR
COMP
CM 1
CM 2
BM
PLF PLM
PLM
PB1
FB1
FB2
TR1
TR2
CB
GND
EVM
EVU
EVT
EVHG
EVMG
LCD
HPS
LPS
IPS
OFS
HDS
OCS
CCH
RCS
ECON EXT
EHK EXT
TB
S1
S2
C
CO2
OH
OAT
OAT
RH
RAT
RAT
SAT
SAT
F1
F2
P1
P2
RH
OH
CO2
ES
ECON
EHK
PLF
PLM
BC
MC
A1
A2
A3
A4
A5
A6
A7
A8
A9
A10
A11
A12
A13
A14
A15
A16
A17
A18
A19
A20
A21
A22
A23
A24
A25
A26
A27
A28
A29
A30
A31
A32
A33
A34
A35
A36
A37
A38
A39
A40

WIRING DIAGRAM

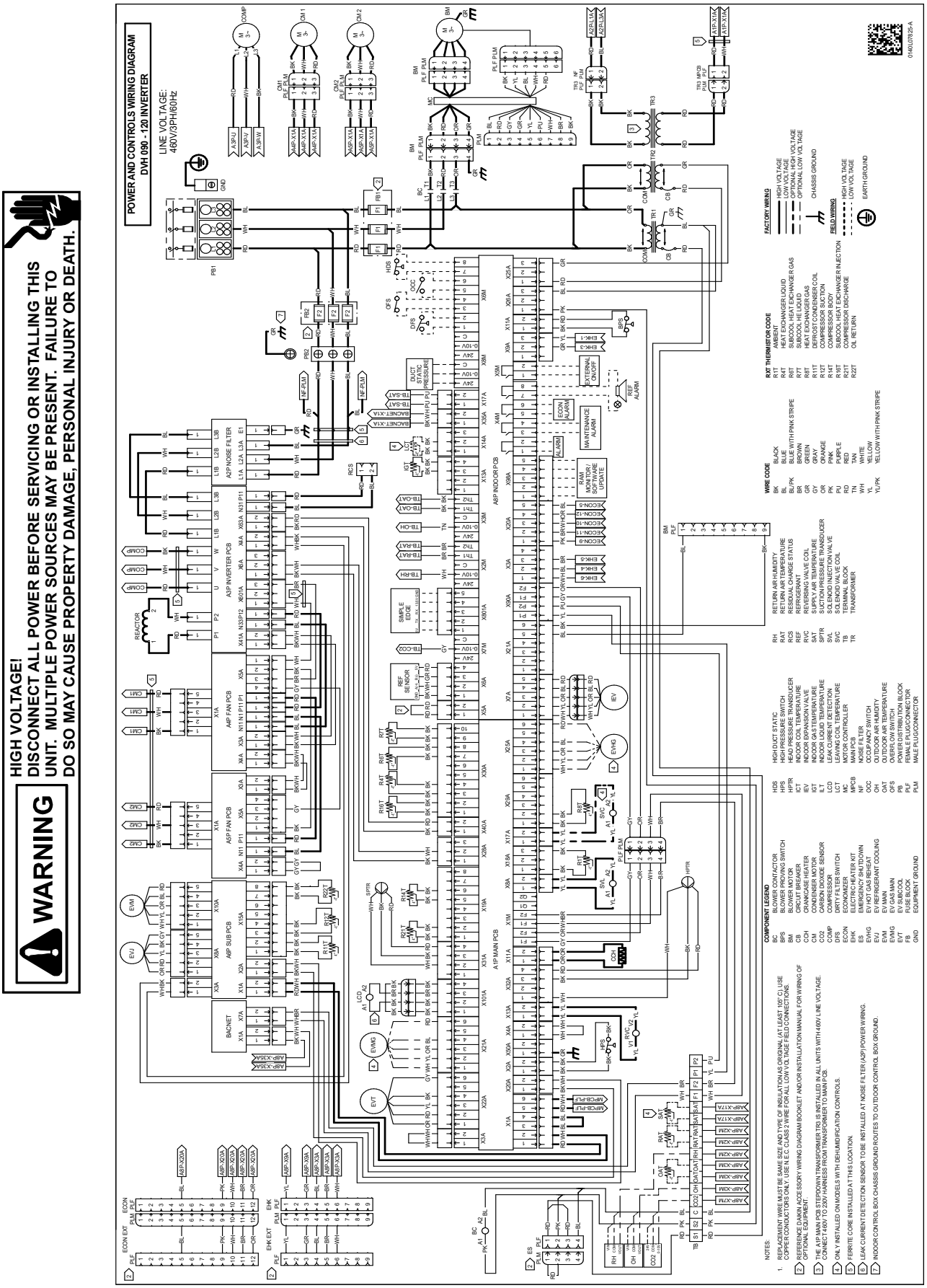

Wiring is subject to change. Always refer to the wiring diagram on the unit for the most up-to-date wiring.

DAIKIN

Start-up Checklist

*Store in job file

Date: _____ Location: _____

Model Number: _____ _____

Serial Number: _____ _____

Technician: _____ Unit#: _____

Pre Start-Up

(Check each item as completed)

- ❑ Verify all packaging material has been removed.
- ❑ Remove all shipping brackets per installation instructions.
- ❑ Verify the job site voltage agrees with the unit serial plate.
- ❑ Verify condensate connection is installed per installation instructions.
- ❑ Verify proper clearance around the unit for safety, service, maintenance and proper unit operation.
- ❑ Verify proper weather proofing of all ductwork, roof curbs and electrical connections.
- ❑ Check refrigerant piping for rubbing and leaks. Repair if necessary.
- ❑ Check unit wiring to ensure it is not in contact with refrigerant piping or sharp metal edges.
- ❑ Check all electrical connections and terminals. Tighten as needed.
- ❑ Verify that the crankcase heaters have been energized for 6 hours.
- ❑ Verify the scroll compressor(s) are rotating in the right direction.
- ❑ Verify all accessories are installed and operating correctly.
- ❑ Check filters and replace if necessary.
- ❑ Verify the installation of the remote controller. A Daikin approved remote controller is the only approved for inverter unit.

9/2014

Start-Up

(Insert the values as each item is completed)

ELECTRICAL

Supply Voltage L1 - L2 _____ L2 - L3 _____ L3 -L1 _____

BLOWER EXTERNAL STATIC PRESSURE

Return Air Static Pressure _____ IN. W.C.

Supply Air Static Pressure _____ IN. W.C.

Total External Static Pressure _____ IN. W.C.

Blower Wheel RPM _____ RPM

TEMPERATURES

Outdoor Air Temperature _____ DB _____ WB

Return Air Temperature _____ DB _____ WB

Cooling Supply Air Temperature _____ DB _____ WB

Heating Supply Air Temperature _____ DB _____ WB

PRESSURES

Suction Circuit 1 _____ PSIG _____ °F

Superheat _____ °F

Suction Circuit 2 _____ PSIG _____ °F

Superheat _____ °F

Discharge Circuit 1 _____ PSIG _____ °F

Subcooling _____ °F

Discharge Circuit 2 _____ PSIG _____ °F

Subcooling _____ °F

CUSTOMER FEEDBACK
Daikin is very interested in all product comments.
Please fill out the feedback form on the following link:
https://daikincomfort.com/contact-us
You can also scan the QR code on the right to be directed to the feedback page.

Our continuing commitment to quality products may mean a change in specifications without notice.

©2026 Daikin Comfort Technologies Manufacturing, Inc.
19001 Kermier Rd., Waller, TX 77484
www.daikincomfort.com