CMXV**AVJU* (MULTI-SPLIT AIR HANDLERS)

WARNING

ONLY PERSONNEL THAT HAVE BEEN TRAINED TO INSTALL, ADJUST, SERVICE, MAINTENANCE OR REPAIR (HEREINAFTER, "SERVICE") THE EQUIPMENT SPECIFIED IN THIS MANUAL SHOULD SERVICE THE EQUIPMENT.
THIS EQUIPMENT IS NOT INTENDED FOR USE BY PERSONS (INCLUDING CHILDREN) WITH REDUCED PHYSICAL, SENSORY OR MENTAL CAPACITIES, OR LACK OF EXPERIENCE AND KNOWLEDGE, UNLESS THEY HAVE BEEN GIVEN SUPERVISION OR INSTRUCTION CONCERNING USE OF THE APPLIANCE BY A PERSON RESPONSIBLE FOR THEIR SAFETY. CHILDREN SHOULD BE SUPERVISED TO ENSURE THAT THEY DO NOT PLAY WITH THE EQUIPMENT.
THE MANUFACTURER WILL NOT BE RESPONSIBLE FOR ANY INJURY OR PROPERTY DAMAGE ARISING FROM IMPROPER SUPERVISION, SERVICE OR SERVICE PROCEDURES. IF YOU SERVICE THIS UNIT, YOU ASSUME RESPONSIBILITY FOR ANY INJURY OR PROPERTY DAMAGE WHICH MAY RESULT. IN ADDITION, IN JURISDICTIONS THAT REQUIRE ONE OR MORE LICENSES TO SERVICE THE EQUIPMENT SPECIFIED IN THIS MANUAL, ONLY LICENSED PERSONNEL SHOULD SERVICE THE EQUIPMENT. IMPROPER SUPERVISION, INSTALLATION, ADJUSTMENT, SERVICING, MAINTENANCE OR REPAIR OF THE EQUIPMENT SPECIFIED IN THIS MANUAL, OR ATTEMPTING TO INSTALL, ADJUST, SERVICE OR REPAIR THE EQUIPMENT SPECIFIED IN THIS MANUAL WITHOUT PROPER SUPERVISION OR TRAINING MAY RESULT IN PRODUCT DAMAGE, PROPERTY DAMAGE, PERSONAL INJURY OR DEATH.

WARNING

DO NOT BYPASS SAFETY DEVICES.

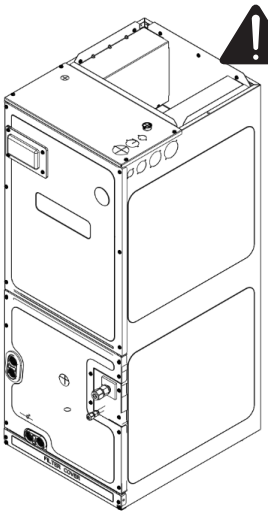

RECOGNIZE THIS SYMBOL AS A SAFETY PRECAUTION.

NOTE

Specifications and performance data listed herein are subject to change without notice.
This equipment is only approved for use with R-32 Refrigerant.

NOTE

The installer must refer to section "refrigerant detection system (RDS)" for the minimum air conditioned room area and total system refrigerant charge which must be recorded on the serial plate.

QUEBEC DISCLOSURE REGARDING AVAILABILITY OF REPLACEMENT PARTS, REPAIR SERVICES AND INFORMATION FOR MAINTENANCE AND REPAIR: Daikin Comfort Technologies Manufacturing, Inc. (Daikin) does not guarantee the availability of (1) replacement parts; (2) repair services; and (3) information necessary to maintain or repair products, within the meaning of section 39.1 of the Consumer Protection Act, CQLR, c P-40.1 and section 79.18 of the Regulation respecting the application of the Consumer Protection Act, CQLR, c P-40.1, r. 3.

AVIS POUR LE QUÉBEC CONCERNANT LA DISPONIBILITÉ DES PIÈCES DE RECHANGE, DES SERVICES DE RÉPARATION ET DES RENSEIGNEMENTS POUR L'ENTRETIEN ET LA RÉPARATION : Daikin Comfort Technologies Manufacturing, Inc. (Daikin) ne garantit pas la disponibilité (1) des pièces de rechange, (2) des services de réparation et (3) des renseignements pour l'entretien et la réparation, au sens de l'article 39.1 de la Loi sur la protection du consommateur, RLRQ c P-40.1 et de l'article 79.18 du Règlement d'application de la Loi sur la protection du consommateur, RLRQ c P-40.1, r 3.

1 Important Safety Instructions ***2***
2 Shipping Inspection ***3***
2.1 Parts *3*
2.2 Handling *3*
3 Codes & Regulations ***3***
4 Replacement Parts ***4***
5 Pre-Installation Considerations ***4***
5.1 Preparation *4*
5.2 System Matches *4*
5.3 Interconnecting Tubing *4*
5.4 Clearances *4*
5.5 Horizontal Applications *4*
6 Installation Location ***4***
6.1 Upflow Installation *5*
6.2 Horizontal Left Installation *5*
6.2.1 Instructions To Relocate A2L Sensor Bracket Assembly From Upflow to Horizontal Left *5*
6.3 Downflow/Horizontal Right Installation *5*
6.3.1 Instructions to Relocate A2L Sensor Bracket Assembly From Downflow to Horizontal Right *9*
7 Refrigerant Lines ***10***
7.1 Tubing Size *10*
7.2 Tubing Preparation *10*
7.3 Tubing Connections *10*
7.3.1 Flaring the Pipe End *10*
7.3.2 Refrigerant Piping *10*
7.4 Selection of Copper and Heat Insulation Materials *11*
7.5 Other Pipework Considerations *11*

IOD-4065C
08/2026

Our continuing commitment to quality products may mean a change in specifications without notice.
© 2025-2026 Daikin Comfort Technologies Manufacturing, Inc.
19001 Kermier Rd., Waller, TX 77484
www.daikincomfort.com

7.6 Standing Pressure Test of Field Connections *11*
7.7 Procedure for Breaking into Refrigerant Circuit *11*
8 Condensate Drain Lines ***12***
9 Ductwork ***12***
9.1 Return Ductwork *13*
10 Return Air Filters ***13***
11 Electric Heat ***13***
12 Electrical and Control Wiring ***14***
12.1 Building Electrical Service Inspection *14*
12.2 Wire Sizing *14*
12.3 Maximum Overcurrent Protection (MOP) *14*
12.4 Electrical Connections – Supply Voltage *14*
12.4.1 Air Handler Only (Non-Heat Kit Models) *14*
12.4.2 Air Handler - Non-Circuit Breaker Heat Kits *15*
12.4.3 Air Handler With Circuit Breaker Heat Kit *16*
12.5 General Instructions *15*
12.6 Wiring Example *15*
12.6.1 Specification for Field Wire *17*
12.6.2 Wiring Connection Method *17*
12.7 Low Voltage Connections *17*
12.8 Leak Detection Output (Relay K6R) *17*
12.8.1 Refrigerant Leak Test *17*
12.8.2 Refrigerant Leak Test through Indoor PCB *18*
12.9 Wiring for Daikin One Thermostat *18*
13 Achieving 1.4% & 2% Low Leakage Rate ***18***
14 Refrigeration Detection System (RDS) ***18***
14.1 Altitude Adjustment Factor *20*
15 Miscellaneous Start-Up Checklist ***20***
15.1 Auxiliary Alarm Switch *21*
15.2 Accessory Contacts (Humidifier Relay) *21*
16 Setting ***22***
16.1 Heater Kit Selection *22*
16.2 Accessory Contacts *22*
16.3 Error Priority Setting *22*
17 Troubleshooting ***22***
17.1 Electrostatic Discharge (ESD) Precautions *22*
17.2 Diagnostic Chart *22*
Troubleshooting ***23***
Diagnostic Codes ***26***
Wiring Diagram ***27***
Routine Maintenance ***28***
Start-Up Checklist ***30***

1 IMPORTANT SAFETY INSTRUCTIONS

The following symbols and labels are used throughout this manual to indicate immediate or potential safety hazards. It is the owner's and installer's responsibility to read and comply with all safety information and instructions accompanying these symbols. Failure to heed safety information increases the risk of personal injury, property damage, and/or product damage.

NOTICE: THIS PRODUCT CONTAINS ELECTRONIC COMPONENTS WHICH REQUIRE A DEFINITE GROUND. PROVISIONS ARE MADE FOR CONNECTION OF THE GROUND. A DEDICATED GROUND FROM THE MAIN POWER SUPPLY OR AN EARTH GROUND MUST BE PROVIDED.

WARNING

HIGH VOLTAGE
Disconnect all power before servicing or installing this unit. Multiple power source may be present. Failure to do so may cause property damage, personal injury or death.

WARNING

To prevent the risk of property damage, personal injury, or death, do not store combustible materials or use gasoline or other flammable liquids or vapors in the vicinity of this unit.

WARNING

To avoid property damage, personal injury or death due to electrical shock, this unit MUST have an uninterrupted, unbroken electrical ground. The electrical ground circuit may consist of an appropriately sized electrical wire connecting the ground lug in the unit control box to the building electrical service panel.
Other methods of grounding are permitted if performed in accordance with the National Electric Code (NEC)/American National Standards Institute (ANSI)/National Fire Protection Association (NFPA) 70 and local/state codes. In Canada, electrical grounding is to be in accordance with the Canadian Electric Code (CSA) C22.1.

CAUTION

When installing or servicing this equipment, safety clothing, including hand and eye protection, is strongly recommended. If installing in an area that has special safety requirements (hard hats, etc.), observe these requirements.

WARNING

This product is factory-shipped for use with 208V/230V/1PH/60Hz electrical power supply. DO NOT reconfigure this CMXV air handler to operate with any other power supply.

WARNING

A refrigerant leak detection system is installed. The unit must be powered on all times except for service.

WARNING

Do not connect to or use any device that is not listed in the applicable product specifications as acceptable for use with this unit. Serious property damage, personal injury, reduced unit performance and/or hazardous conditions may result from the use of such non-approved devices.

WARNING

Failure to properly reconnect sensor wires may result in Error codes and the unit not operating.

DANGER
PELIGRO

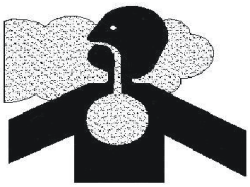

CARBON MONOXIDE POISONING HAZARD

Special Warning for Installation of Furnace or Air Handling Units in Enclosed Areas such as Garages, Utility Rooms or Parking Areas

Carbon monoxide producing devices (such as an automobile, space heater, gas water heater, etc.) should not be operated in enclosed areas such as unventilated garages, utility rooms or parking areas because of the danger of carbon monoxide (CO) poisoning resulting from the exhaust emissions. If a furnace or air handler is installed in an enclosed area such as a garage, utility room or parking area and a carbon monoxide producing device is operated therein, there must be adequate, direct outside ventilation.

This ventilation is necessary to avoid the danger of CO poisoning which can occur if a carbon monoxide producing device continues to operate in the enclosed area. Carbon monoxide emissions can be (re)circulated throughout the structure if the furnace or air handler is operating in any mode.

CO can cause serious illness including permanent brain damage or death. B10259-216

RIESGO DE INTOXICACIÓN POR MONÓXIDO DE CARBONO

Advertencia especial para la instalación de calentadores ó manejadoras de aire en áreas cerradas como estacionamientos ó cuartos de servicio.

Los equipos ó aparatos que producen monóxido de carbono (tal como automóvil, calentador de gas, calentador de agua por medio de gas, etc) no deben ser operados en áreas cerradas debido al riesgo de envenenamiento por monóxido de carbono (CO) que resulta de las emisiones de gases de combustión. Si el equipo ó aparato se opera en dichas áreas, debe existir una adecuada ventilación directa al exterior.

Esta ventilación es necesaria para evitar el peligro de envenenamiento por CO, que puede ocurrir si un dispositivo que produce monóxido de carbono sigue operando en el lugar cerrado.

Las emisiones de monóxido de carbono pueden circular a través del aparato cuando se opera en cualquier modo.

El monóxido de carbono puede causar enfermedades severas como daño cerebral permanente ó muerte. B10259-216

RISQUE D'EMPOISONNEMENT AU MONOXYDE DE CARBONE

Avertissement special au sujet de l'installation d'appareils de chauffage ou de traitement d'air dans des endroits clos, tets les garages, les locaux d'entretien et les stationnements.

Evitez de mettre en marche les appareils produisant du monoxyde de carbone (tels que les automobile, les appareils de chauffage autonome,etc.) dans des endroits non ventilés tels que les d'empoisonnement au monoxyde de carbone. Si vous devez faire fonctionner ces appareils dans un endroit clos, assures-vous qu'il y ait une ventilation directe provenant de l'exterier.

Cette ventilation est nécessaire pour éviter le danger d'intoxication au CO pouvant survenir si un appareil produisant du monoxyde de carbone continue de fonctionner au sein de la zone confinée.

Les émissions de monoxyde de carbone peuvent etre recircules dans les endroits clos, si l'appareil de chauffage ou de traitement d'air sont en marche.

Le monoxyde de carbone peut causer des maladies graves telles que des dommages permanents au cerveau et meme la mort. B10259-216

2 SHIPPING INSPECTION

Always transport the unit upright; laying the unit on its side or top during transit may cause equipment damage. The installer should inspect the product upon receipt for shipping damage and subsequent investigation is the responsibility of the carrier. The installer must verify the model number, specifications, electrical characteristics, and accessories are correct prior to installation. The distributor or manufacturer will not accept claims from dealers for transportation damage or installation of incorrectly shipped units.

2.1 Parts

Inspect the unit to verify all required components are present and intact. Report any missing components immediately to Daikin or to the distributor. Use only factory authorized replacement parts (see Section 4). Make sure to include the full product model number and serial number when reporting and/or obtaining service parts.

2.2 Handling

Use caution when transporting/carrying the unit. Do not move unit using shipping straps. Do not carry unit with hooks or sharp objects. The preferred method of carrying the unit after arrival at the job site is to carry via a two-wheel hand truck from the back or sides or via hand by carrying at the cabinet corners. If carrying by hand, carry at the cabinet corners with two people. Avoid holding the unit by piping or mechanical joints.

WARNING

IF ANY HOT WORK IS TO BE CONDUCTED ON THE REFRIGERATING EQUIPMENT OR ANY ASSOCIATED PARTS, APPROPRIATE FIRE EXTINGUISHING EQUIPMENT SHALL BE AVAILABLE ON HAND. HAVE A DRY POWDER OR CO2 FIRE EXTINGUISHER ADJACENT TO THE HOT WORK AREA.

ENSURE THAT THE AREA IS IN THE OPEN OR THAT IT IS ADEQUATELY VENTILATED BEFORE BREAKING INTO THE SYSTEM OR CONDUCTING ANY HOT WORK. A DEGREE OF VENTILATION SHALL CONTINUE DURING THE PERIOD THAT THE WORK IS CARRIED OUT. THE VENTILATION SHOULD SAFELY DISPERSE ANY RELEASED REFRIGERANT AND PREFERABLE EXPEL IT EXTERNALLY INTO THE ATMOSPHERE.

3 CODES & REGULATIONS

This product is designed and manufactured to comply with national codes such as UL60335 2-40, ASHRAE 15, ASHRAE 15.2, IAPMO Uniform Mechanical Code, ICC International Mechanical Code or CSA B52. Installation in accordance with such codes and/or prevailing local codes/regulations is the responsibility of the installer. The manufacturer assumes no responsibility for equipment installed in violation of any codes or regulations.

The United States Environmental Protection Agency (EPA) has issued various regulations regarding the introduction and disposal of refrigerants. Failure to follow these regulations may harm the environment and can lead to the imposition of substantial fines. Should you have any questions please contact the local office of the EPA and/or refer to EPA's website www.epa.gov.

4 REPLACEMENT PARTS

When reporting shortages or damages, or ordering repair parts, give the complete product model and serial numbers as stamped on the product. Replacement parts for this product are available through your contractor or local distributor.

5 PRE-INSTALLATION CONSIDERATIONS

5.1 Preparation

Keep this document with the unit. Carefully read all instructions for the installation prior to installing product. Make sure each step or procedure is understood and any special considerations are taken into account before starting installation. Assemble all tools, hardware and supplies needed to complete the installation. Some items may need to be purchased locally. Make sure everything needed to install the product is on hand before starting.

5.2 System Matches

WARNING

PARTIAL UNITS SHALL ONLY BE CONNECTED TO AN APPLIANCE SUITABLE FOR THE SAME REFRIGERANT. THIS UNIT IS A PARTIAL UNIT AIR CONDITIONER, COMPLYING WITH PARTIAL UNIT REQUIREMENTS OF THIS INTERNATIONAL STANDARD, AND MUST ONLY BE CONNECTED TO OTHER UNITS THAT HAVE BEEN CONFIRMED AS COMPLYING TO CORRESPONDING PARTIAL UNIT REQUIREMENTS OF THIS INTERNATIONAL STANDARD.

The entire system (combination of indoor and outdoor sections) must be manufacturer approved and Air-Conditioning, Heating, and Refrigeration Institute (AHRI) listed.

NOTE: Installation of unmatched systems is not permitted. Damage or repairs due to installation of unmatched systems is not covered under the warranty.

5.3 Interconnecting Tubing

Give special consideration to minimize the length of refrigerant tubing when installing CMXV air handlers. Refer to outdoor Multi-split Type Air Conditioners for line set configuration guidelines. If possible, allow adequate length of tubing such that the coil may be removed (for inspection or cleaning services) from the cabinet without disconnecting the tubing.

5.4 Clearances

WARNING

WHEN INSTALLED IN A ROOM WITH AN AREA LESS THAN THAT OUTLINED IN TABLE 12, THAT ROOM SHALL BE WITHOUT CONTINUOUSLY OPERATING OPEN FLAMES (FOR EXAMPLE AN OPERATING GAS APPLIANCE) OR OTHER POTENTIAL IGNITION SOURCES (FOR EXAMPLE AN OPERATING ELECTRIC HEATER, HOT SURFACES).

WARNING

AUXILIARY DEVICES WHICH MAY BE A POTENTIAL IGNITION SOURCE ARE NOT TO BE INSTALLED IN THE DUCT WORK. SUCH POTENTIAL-IGNITION SOURCES INCLUDE HOT SURFACES WITH A TEMPERATURE EXCEEDING 650°C AND ELECTRIC SWITCHING DEVICES. FOR EXAMPLE ELECTRONIC AIR FILTERS ARE A POTENTIAL IGNITION SOURCE.

The unit clearance from a combustible surface may be 0”. However, service clearance must take precedence. A minimum of 24” in front of the unit for service clearance is required. Additional clearance on one side or top will be required for electrical wiring connections. Consult all appropriate regulatory codes prior to determining final clearances. When installing this unit in an area that may become wet (such as crawl spaces), elevate the unit with a sturdy, non-porous material. In installations that may lead to physical damage (i.e. a garage) it is advised to install a protective barrier to prevent such damage. Always install units such that a positive slope in condensate line (1/4” per foot) is allowed.
Further, any joints made in the installation between parts of the refrigerating system must be accessible for maintenance purposes.

5.5 Horizontal Applications

If installed above a finished living space a secondary drain pan with float switch, as required by many building codes, must be installed under the entire unit and its condensate drain line must be routed to a location such that the user will see the condensate discharge.

6 INSTALLATION LOCATION

NOTE: These air handlers are designed for indoor installation only at a max altitude of 10,500 feet above sea level or a min altitude of -184 feet below sea level
If the unit is located in an unconditioned area with high ambient temperature and/or high humidity, the CMXV air handler may be subject to nuisance sweating of the casing. On these installations, a wrap of 2” fiberglass insulation with a vapor barrier is recommended. Do not cover warning labels or serial plate.

Maximum operating pressure is considered when connecting to any condenser unit or evaporator unit.

The CMXV* Series Air Handler product line may be installed in one of the upflow, downflow, horizontal left or horizontal right orientations as shown in Figures 2, 3, 5 and 6. The unit may be installed in upflow or horizontal left orientation as shipped (refer to specific sections for more information).

Minor field modifications are necessary to convert to downflow or horizontal right as indicated in below sections.
For CMXV* installations in areas where the return air environment sees humidity levels above 65% relative humidity, a High Humidity Kit (HHK) must be used. See Table 2 for Model and Kit assignment.

Before disconnecting the tubing panel from the unit, the insulation seals around the liquid and suction tubes need to be removed. When reattaching tubing panel, ensure that the seal, both liquid and gas piping, is replaced by the insulation provided in the literature kit to maintain system performance and prevent condensation.

6.1 Upflow Installation

No field modifications are mandatory however to obtain maximum efficiency, the horizontal drip shield and, side drain pan, can be removed.

6.2 Horizontal Left Installation

No field modifications are permissible for this application.

Drain port labeled (B) in Figure 4 is the primary drain for this application and condensate drain line must be attached to this drain port. Drain port (b) is for the secondary drain line (if used).

In applications where the CMXV air handler is installed in the horizontal left or right position, and the return air environment see humidity levels above 65% relative humidity coupled with total external static levels above 0.5" e.s.p., a Condensate Management Kit (CMK) is available for field application. Kit nomenclature can be found in the Table 2.

DRAIN PORT PLUG		
Kit Number	**Description**	**Application**
DPK1	Side Drain Port Plug	All Models

Table 1

6.2.1 Instructions To Relocate A2L Sensor Bracket Assembly From Upflow To Horizontal Left

1. Take off the coil access panel
2. Take off the drain port gaskets from Figure 4, drain port labeled (A) and (B) on main drain pan and side drain pan
3. Take off the A2L sensor bracket assembly as shown in Figure 4
4. Put A2L sensor bracket assembly to the side drain port correctly as shown in the Figure 5. The "FRONT 0121A*****" print on sensor bracket should be in the front
5. Place gaskets back to the drain ports correctly. The "FRONT" print on the gaskets should be in the front.
6. Sensor wiring should be routed as shown in Figure 5.
7. Reassemble the blower access panel to the unit.

6.3 Downflow/Horizontal Right Installation

IMPORTANT NOTE: In the downflow application, to prevent coil pan "sweating", the mandatory downflow kit (DFK) is available through your local Daikin distributor. The DFK is not supplied with the CMXV air handler and is required to minimize pan sweating on all downflow installations. See Table 2 for the correct DFK and follow the instructions provided for installation.

NOTE: For CMXV* only: If installing a filter, an external filter must be used when installing the unit in Horizontal Right (Figure 6), or if the side drain pan is not removed for downflow application. A filter will not fit on the internal filter rails in these applications.

Refer to Figure 7 and 8 for the location of the components referenced in the following steps.

1. Before flipping the CMXV air handler, remove blower access panel and coil access panel. The coil access panel and tubing panel may remain screwed together during this procedure. Remove and retain the seven (7) screws securing the coil access panel to the cabinet and the six (6) screws securing the blower access panel to the cabinet.
2. Before removing the coil, Cut Wire Tie 1, 2 shown in Figure 3 and disconnect sensor wires (Thermistor Wire Harness, A2L Sensor Wire Harness, and Pressure sensor Wire Harness) from wire harnesses connectors connected to PCB and secure. Unbundled the wires by cutting Wire Tie.
   NOTE: Do not use manifolds, copper lines or the flowrator to pull the coil assembly out. Failure to do so may result in braze joint damage and leaks.
3. Remove tubing panel assy from the unit. Slide the coil assembly out using the bottom drain pan to pull the assembly from the cabinet.
4. Using the bottom drain pan to hold the coil assembly, slide the coil assembly back into the cabinet on the downflow brackets as shown in Figure 12.
5. Reroute the wire harnesses shown in Figure 3 (Downflow) and Figure 6 (Horizontal Right), secure with wire tie 1 and 2 shown in Figure 3, connect sensor wires (Thermistor Wire Harness, A2L Sensor Wire Harness, and Pressure sensor Wire Harness) with wire harnesses connectors connected to PCB and secure bundled wires after the installation with a Wire Tie according to the requirement of the wire lengths.
6. Re-install the access panels removed in Step 1 as shown in Figure 14. When reattaching tubing panel, ensure that the seal, both liquid and gas piping, is replaced by the insulation provided in the literature kit to maintain system performance and prevent condensation.
7. As shown in Figure 11, two drain ports located at the bottom drain pan (horizontally oriented) are to be used for upflow and downflow applications and the two on the side drain pan (vertically oriented) are to be used when the unit is in horizontal right or left configuration. When the unit is in upflow or downflow configuration, the drain ports located on bottom drain pan must be plugged and vice versa. Drain ports located at lower elevation (closer to the ground) in either configuration must be connected to the main drain line and the higher is for the secondary drain line.

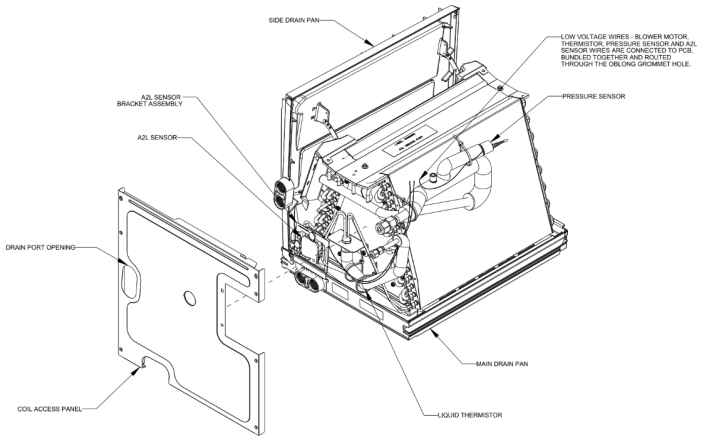

Figure 1

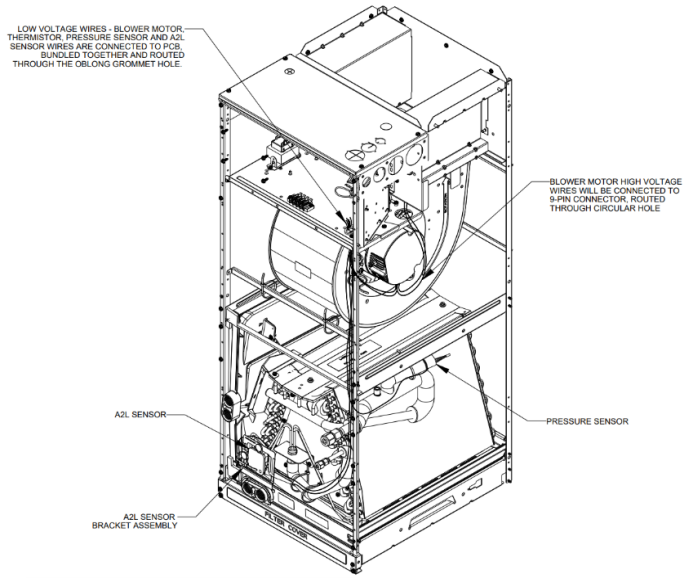

Figure 2

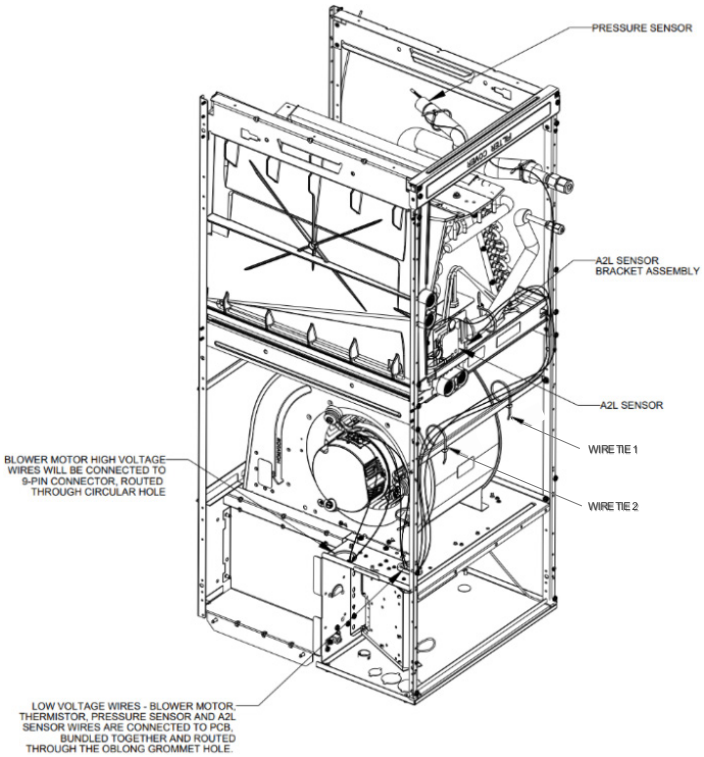

Figure 3

	High Humidity Kit	Condensate Kit	Downflow Kit
CMXV12AVJUA	HHK0001	CMK0015	DFKE-02
CMXV18AVJUA	HHK0001	CMK0015	DFKE-02
CMXV24AVJUA	HHK0001	CMK0015	DFKE-02

Table 2 - Condensate Management Kits

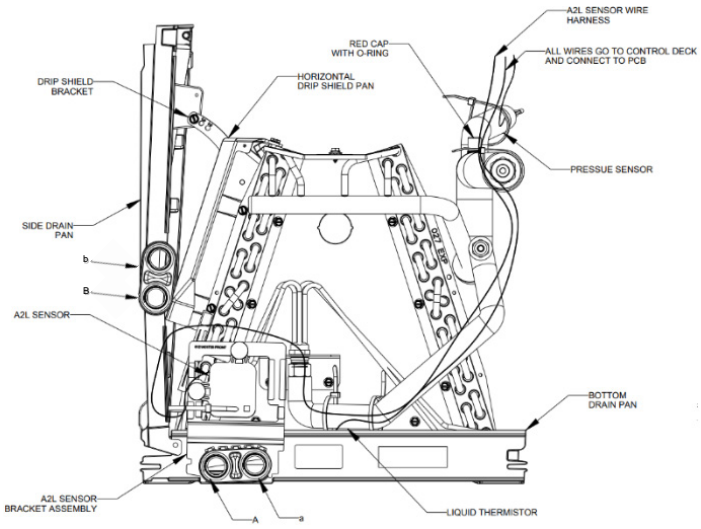

Figure 4

NOTE: If removing only the coil access panel from the unit, the filter access panel must be removed first. Failure to do so may result in panel damage.

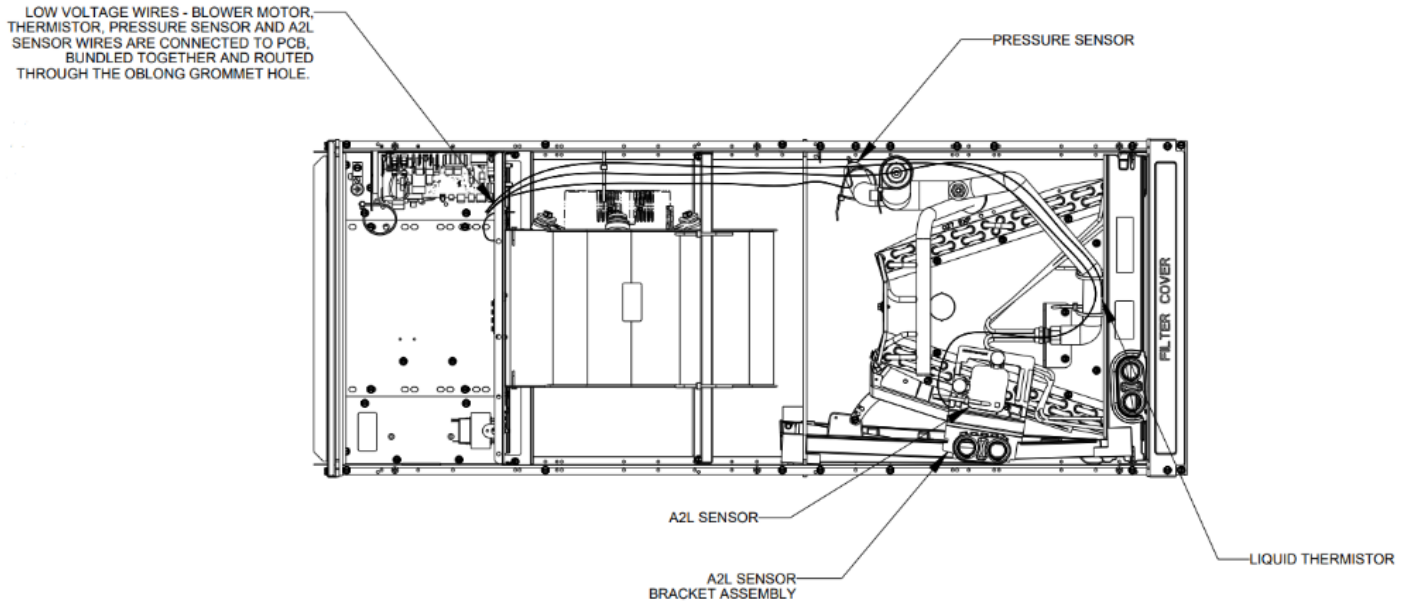

Figure 5

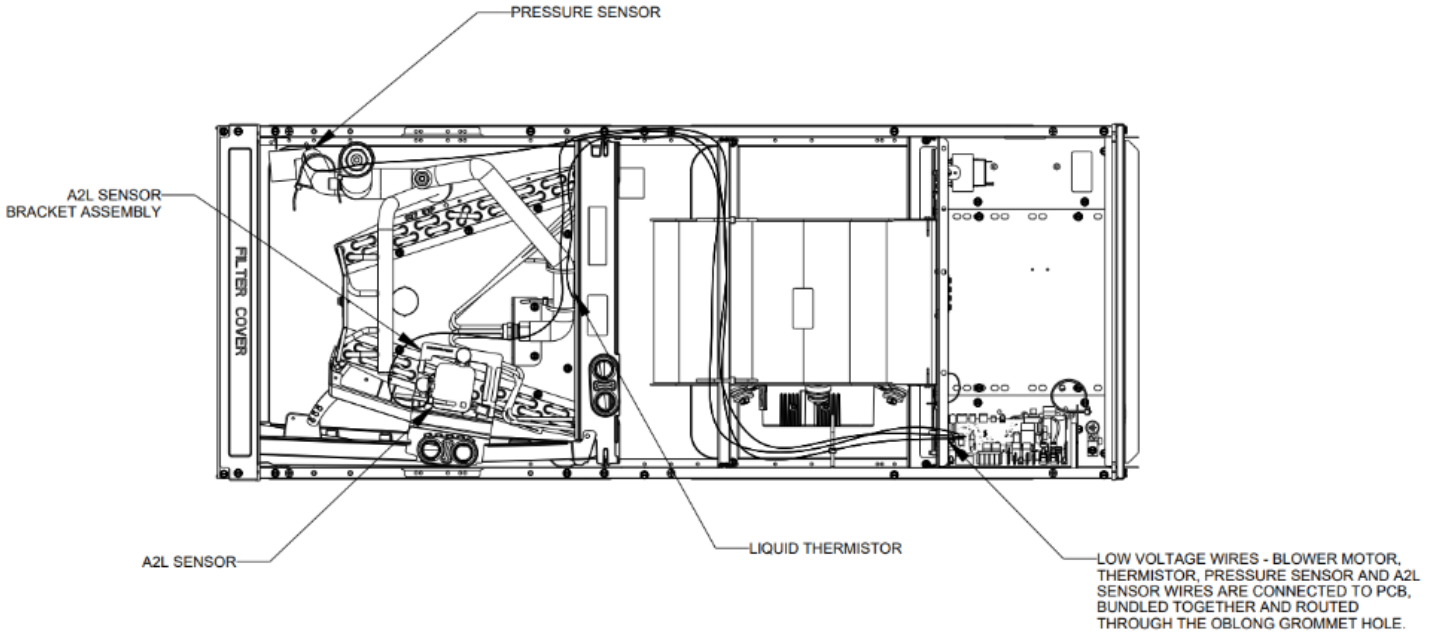

Figure 6

NOTE: If removing only the coil access panel from the unit, the filter access panel must be removed first. Failure to do so may result in panel damage.

NOTE: When installing the CMXV air handler in the horizontal right position in high temperature/high humidity conditions it is recommended to relocate the PCB 90 degrees and attach to blower deck or top plate if heat kit is installed. See instructions below to relocate the PCB.

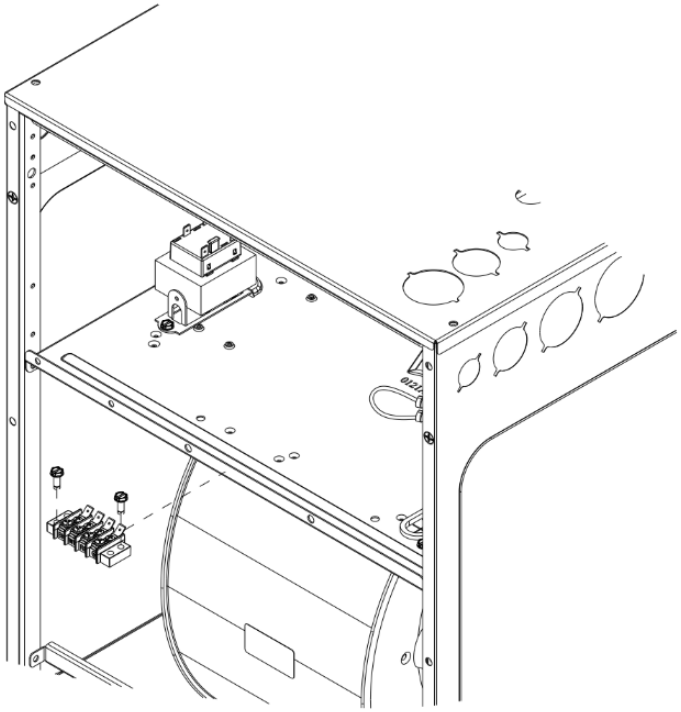

Figure 7

1. Remove the mounting screws on the side of the PCB and the screw on the bottom side attaching bracket to the blower deck. **NOTE:** Remove top plate for easier access to screw behind board.

Figure 8

2. Cut the wire tie to allow excess wire to rotate the PCB.

Figure 9

3. Rotate 90 degrees and attach to blower deck. Using two self-tapping screws.

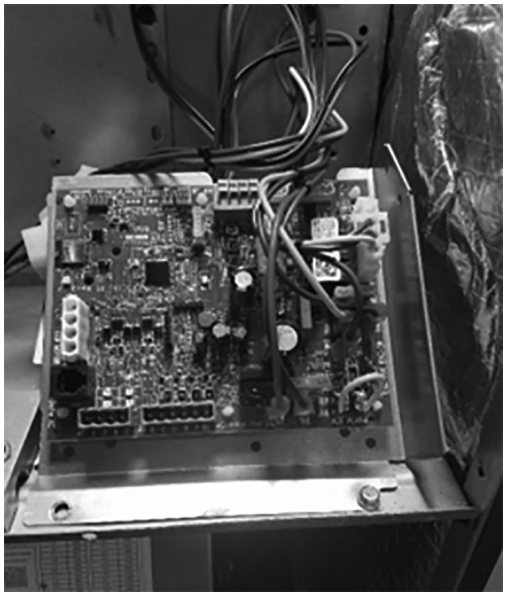

Figure 10

4. Bundle excess wire using wire tie.
5. Make sure to check all wiring connections are secure and tight.

NOTE: Figures 8, 9 and 10 are from a representative model and not CMXV.

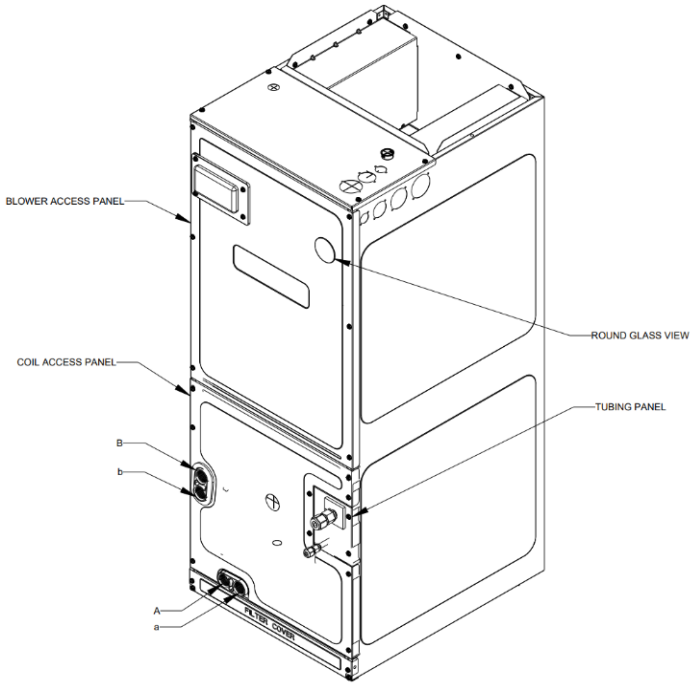

Figure 11

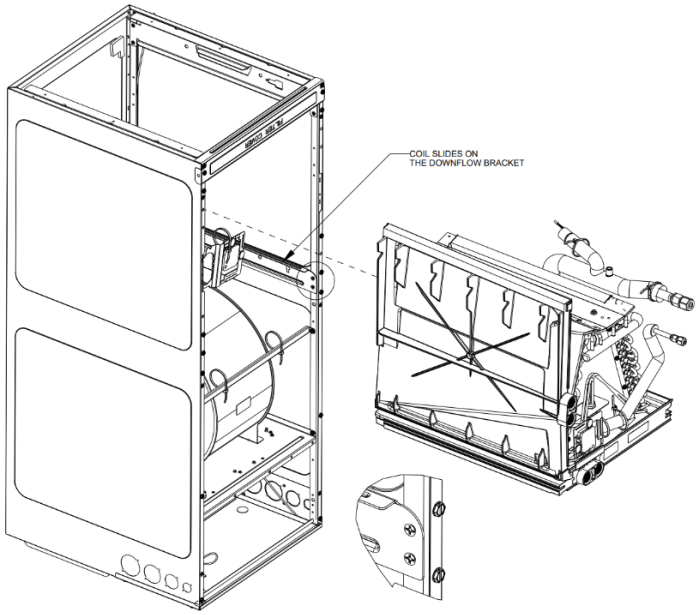

Figure 12

If the unit is in the upflow position, there is no need to rotate the motor. If the unit is in the downflow position, loosen motor mount and rotate motor as shown in the *Motor Orientation,* Figure 13. Be sure motor is oriented with the female connections on the casing down. If the motor is not oriented with the connections down, water could collect in the motor and may cause premature failure.

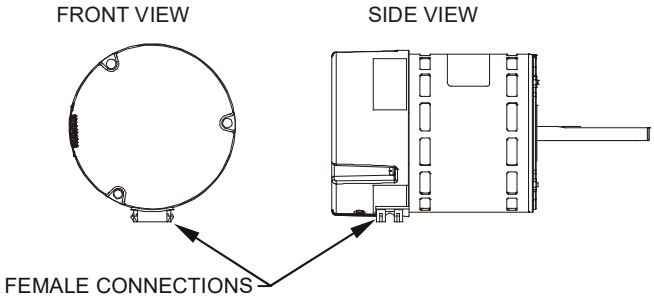

Motor Orientation
Figure 13

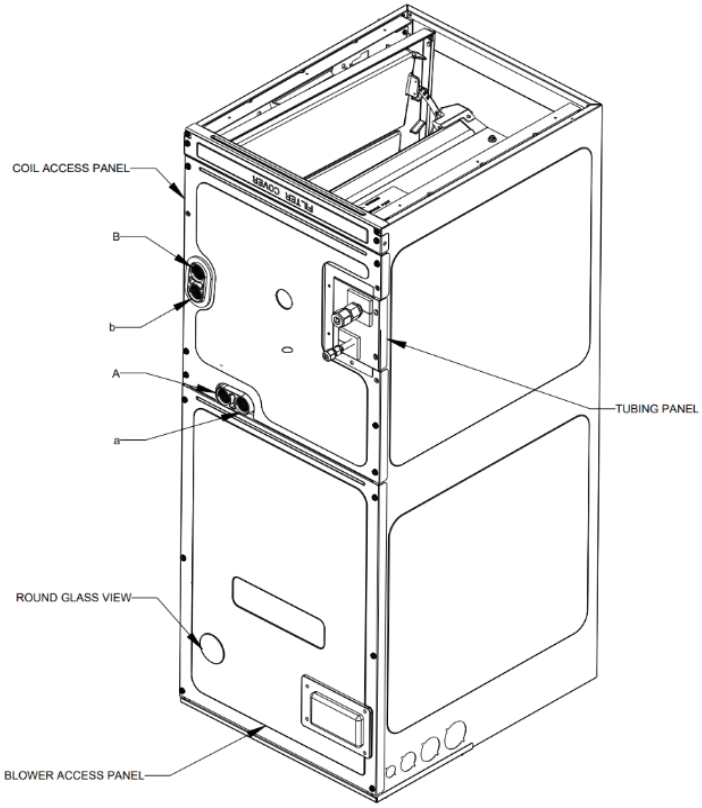

Figure 14

6.3.1 Instruction To Relocate A2L Sensor Bracket Assembly From Downflow To Horizontal Right

1. Take off the coil access panel
2. Take off the drain port gaskets from Figure 4, drain port labeled (A) and (B) on main drain pan and side drain pan
3. Take off the A2L sensor bracket assembly as shown in Figure 4
4. Put A2L sensor bracket assembly to the side drain port correctly as shown in the figure 6. The “FRONT 0121A*****” print on sensor bracket should be in the front
5. Place gaskets back to the drain ports correctly. The “FRONT” print on the gaskets should be in the front.
6. Sensor wiring should be rerouted as shown in Figure 6.
7. Reassemble the blower access panel to the unit.

7 REFRIGERANT LINES

NOTE: Care should be taken to route refrigerant tubing in a way which allows adequate access for servicing and maintenance of the air handling unit.

WARNING

DO NOT USE MEANS TO ACCELERATE THE DEFROSTING PROCESS OR TO CLEAN, OTHER THAN THOSE RECOMMENDED BY THE MANUFACTURER.

THE APPLIANCE SHALL BE STORED IN A ROOM WITHOUT CONTINUOUSLY OPERATING IGNITION SOURCES (FOR EXAMPLE: OPEN FLAMES, AN OPERATING GAS APPLIANCE OR AN OPERATING ELECTRIC HEATER.) DO NO PIERCE OR BURN. BE AWARE THAT REFRIGERANTS MAY NOT CONTAIN AN ODOR.

WARNING

THIS PRODUCT IS FACTORY-SHIPPED WITH DRY NITROGEN MIXTURE GAS UNDER PRESSURE. USE APPROPRIATE SERVICE TOOLS AND FOLLOW THESE INSTRUCTIONS TO PREVENT INJURY.

7.1 Tubing Size

For the correct tubing size, refer to the outdoor Multi-split type air conditioners.

Consult outdoor spec sheet for maximum length lineset per unit and ensure that the absolute length lineset across all indoor units is not exceeded.

7.2 Tubing Preparation

This unit is equipped with mechanical connection points at the Liquid and Suction tubes for splicing with the lineset.

NOTE: To prevent possible damage to the tubing joints, do not handle coil assembly with manifold or flowrator tubes. Always use clean gloves when handling coil assemblies.

7.3 Tubing Connections

Refrigerant modulation for CMXV* models occurs at the EEV of the outdoor unit. Ensure that any inert gas left in the product is purged, and that the outdoor valve is closed before attempting to connect any tubing. Ensure that the flared joins are accessible for maintenance purposes.

WARNING

DO NOT APPLY MINERAL OIL ON FLARED PART. PREVENT MINERAL OIL FROM GETTING INTO THE SYSTEM AS THIS WOULD REDUCE THE SERVICE LIFE OF THE UNITS. NEVER USE PIPING WHICH HAS BEEN USED FOR PREVIOUS INSTALLATIONS. ONLY USE PARTS WHICH ARE DELIVERED WITH THE UNIT. NEVER INSTALL A DRYER TO THIS R-32 UNIT IN ORDER TO GUARANTEE ITS SERVICE LIFE. THE FRYING MATERIAL MAY DISSOLVE AND DAMAGE THE SYSTEM. INCOMPLETE FLARING MAY RESULT IN REFRIGERANT GAS LEAKAGE.

Before refrigerant piping work, check which type of refrigerant is used. Proper operation is not possible if the types of refrigerant are not the same.

7.3.1 FLARING THE PIPE END

1. Cut the pipe with a pipe cutter.
2. Remove burrs with the cut surface facing downward, so that the fillings do not enter the pipe.

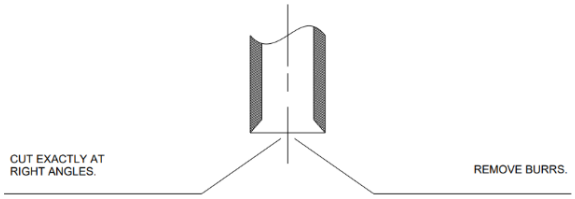

3. Put the flare nut on the pipe.
4. Flare the pipe.
5. Check that the flaring has been done correctly.

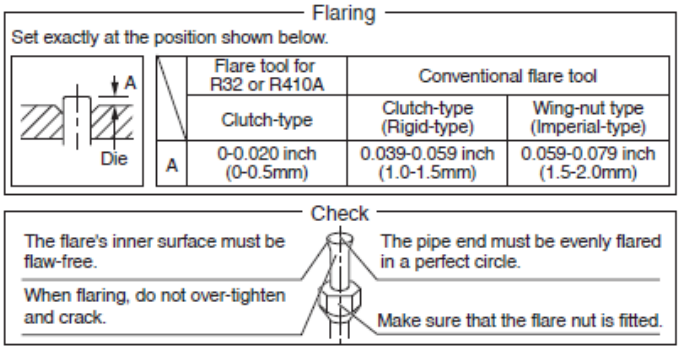

	Flare tool for R32 or R410A	Conventional flare tool	
	Clutch-type	Clutch-type (Rigid-type)	Wing-nut type (Imperial-type)
A	0-0.020 inch (0-0.5mm)	0.039-0.059 inch (1.0-1.5mm)	0.059-0.079 inch (1.5-2.0mm)

7.3.2 Refrigerant Piping

CAUTION

USE THE FLARE NUT FIXED TO THE MAIN UNIT. (THIS IS TO PREVENT THE FLARE NUT FROM CRACKING AS A RESULT OF DETERIORATION OVER TIME.) TO PREVENT GAS LEAKAGE, APPLY REFRIGERATION OIL ONLY TO THE INNER SURFACE OF THE FLARE. (USE REFRIGERATION OIL FOR R-32.) USE A TORQUE WRENCH WHEN TIGHTENING THE FLARE NUTS TO PREVENT DAMAGE TO THE FLARE NUTS AND GAS LEAKAGE. DO NOT HAVE OIL ADHERE TO THE SCREW FIXING PART OF RESIN PARTS. IF OIL ADHERES, IT MAY WEAKEN THE STRENGTH OF SCREWED PART.

- Align the centers of both flares and tighten the flare nuts 3 or 4 turns by hand, then tighten them fully with a spanner and a torque wrench.

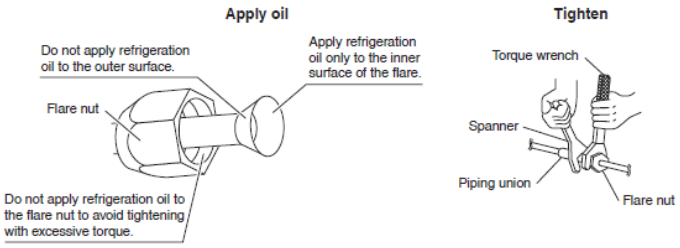

NOTE: Use the same refrigerant oil type as specified for the outdoor unit compressor when connecting the refrigerant pipes. Refer to the outdoor unit specifications for details

	Piping Size	Flare nut tightening torque
Gas Side	O.D. 3/8 inch (9.5mm)	24-1/8 - 29-1/2 lbf•ft (32.8-39.9 N•m)
	O.D. 1/2 inch (12.7mm)	36-1/2 - 44-1/2 lbf•ft (49.5-60.3 N•m)
	O.D. 5/8 inch (15.9mm)	45-5/8 - 55-5/8 lbf•ft (61.8-75.4 N•m)
Liquid Side	O.D. 1/4 inch (6.4mm)	10-1/2 - 12-3/4 lbf•ft (14.2-17.2 N•m)

Table 4 - Flare Nut Torque

7.4 Selection of copper and heat insulation materials

When using commercial copper pipes and fittings, observe the following:

- Insulation material: Polyethylene foam Heat transfer rate: 0.041 to 0.052W/mK (0.024 to 0.030Btu/fth°F (0.035 to 0.045kcal/mh°C)) Be sure to use insulation that is designed for use with HVAC Systems.
- Air conditioning and refrigeration (ACR) Copper pipe only.

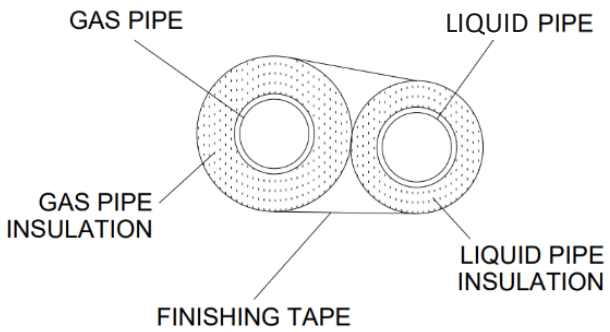

Figure 15

Execute thermal insulation work completely on both sides of the gas and the liquid piping. Otherwise, a water leakage can result sometimes.
For gas piping, use insulation material of which heat resistant temperate is not less than 230° F (110° C).
Also, in cases where the temperature and humidity of the refrigerant piping sections might exceed 86° F (30° C) or RH80%, reinforce the refrigerant insulation. (13/16 inch (20mm) or thicker) Condensation may form on the surface of the insulating material.

7.5 Other Pipework Considerations

Installation of pipe-work must be kept to a minimum. Pipe-work including piping material, pipe routing and installation must be protected from physical damage and shall not be installed in an unventilated space. Equipment piping in any occupied space shall be installed in such a way to protect against accidental damage in operation and service. Precautions must be taken to avoid excessive vibration or pulsation to refrigeration piping. Protection devices, piping and fittings shall be protected as far as possible against adverse environmental effects, for example, the danger of water collecting and freezing in relief pipes or the accumulation of dirt and debris.

Follow standards related to ASHRAE 15, ASHRAE 15.2, IAPMO Uniform Mechanical Code, ICC International Mechanical Code or CSA B52 during any installation. Piping must be accessible for inspection prior to being covered or enclosed in compliance with national and local codes.

Flexible pipe elements must be protected against mechanical damage, excessive stress by torsion, or other forces. They should be checked for mechanical damage annually. The indoor equipment and pipes must be securely mounted and guarded such that accidental rupture of equipment cannot occur from such events as moving furniture or reconstruction activities. Field-made refrigerant joints indoors shall be tightness tested.

7.6 Standing Pressure Test of Field Connections

Field pipework must be pressure tested with an inert gas and then vacuum tested prior to refrigerant charging according to the following requirements:

Pressurize the system to the maximum allowable pressure listed in the serial plate using dry nitrogen or dry helium. Allow the pressure to stabilize and hold for at least 15 minutes. The system is considered leak-free if the pressure does not drop below the selected maximum allowable pressure. If, after 15 minutes, the pressure drops, it implies a leak in the system. Proceed with identifying and sealing the leak and repeating the Standing Pressure Test. Proceed to system evacuation using the Deep Vacuum Method. Leak test the system using dry nitrogen or dry helium and soapy water to identify leaks. NO REFRIGERANT SHALL BE USED FOR PRESSURE TESTING TO DETECT LEAKS. Proceed to system evacuation using the Deep Vacuum Method.

Field-made refrigerant joints indoors shall be tightness tested. The test method shall have a sensitivity of 5 grams (0.176 oz) per year of refrigerant or better under a pressure of at least 0.25 times the maximum allowable pressure. No leak shall be detected.

7.7 Procedure for Breaking into Refrigerant Circuit

Before breaking into the refrigerant circuit to make repairs – or for any other purpose – conventional procedures shall be used. Additionally, the following procedure shall be adhered to:

1. Remove refrigerant;
2. Purge the circuit with inert gas
3. Evacuate
4. Purge with inert gas
5. Continuously flush or purge with inert gas
6. Open the circuit by removing the flare nuts
7. The flare on the line set must be remade before reconnecting to the system

8 CONDENSATE DRAIN LINES

The coil drain pan has a primary and a secondary drain with ¾" NPT female connections. The connectors required are ¾" NPT male, either PVC or metal pipe, and should be hand tightened to a torque of no more than 37 in-lbs. to prevent damage to the drain pan connection. An insertion depth of approximately ⅜" to ½" (3-5 turns) should be expected at this torque.

1. Ensure drain pan hole is not obstructed.
2. To prevent potential sweating and dripping on to finished space, it may be necessary to insulate the condensate drain line located inside the building. Use Armaflex® or similar material.

A secondary condensate drain connection has been provided for areas where the building codes require it. Pitch all drain lines a minimum of ¼" per foot to provide free drainage. Provide required support to the drain line to prevent bowing. If the secondary drain line is required, run the line separately from the primary drain and end it where condensate discharge can be easily seen.

NOTE: Water coming from secondary line means the coil primary drain is plugged and needs immediate attention.

Insulate drain lines located inside the building or above a finished living space to prevent sweating. Install a condensate trap to ensure proper drainage.

NOTE: When units are installed above ceilings, or in other locations where damage from condensate overflow may occur, it is **MANDATORY** to install a field fabricated or supplied auxiliary drain pan under the coil cabinet enclosure.

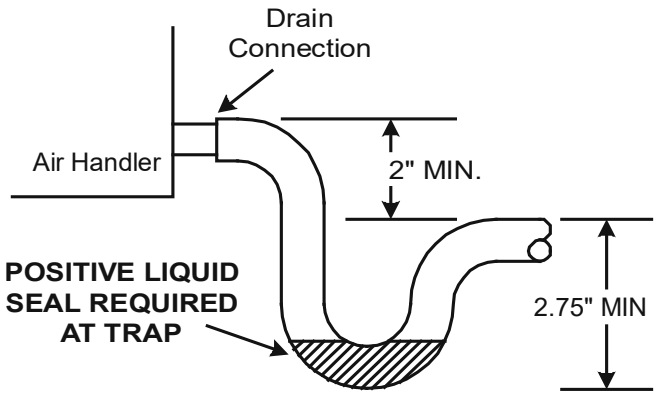

Figure 16

The installation must include a "P" style trap that is located as close as is practical to the indoor unit coil. See Figure 16 for details of a typical condensate line "P" trap.

NOTE: Units operating in high static pressure applications may require a deeper field constructed "P" style trap than is shown in Figure 16 to allow proper drainage and prevent condensate overflow.

NOTE: Trapped lines are required by many local codes. In the absence of any prevailing local codes, please refer to the requirements listed in the Uniform Mechanical Building Code.

A drain trap in a **draw-through** application prevents air from being drawn back through the drain line during fan operation thus preventing condensate from draining, and if connected to a sewer line to prevent sewer gases from being drawn into the airstream during blower operation.

Use of a condensate removal pump is permitted when necessary. This condensate pump should have provisions for shutting off the control voltage should a blocked drain occur. See Auxiliary Alarm Switch section for more details. A trap must be installed between the unit and the condensate pump.

IMPORTANT NOTE: The evaporator coil is fabricated with oils that may dissolve styrofoam and certain types of plastics. Therefore, a removal pump or float switch must not contain any of these materials.

NOTE: Do not take outdoor air directly into the unit. It could cause condensation. Unless a fresh air intake is mandated by local codes and regulation.

9 DUCTWORK

CAUTION

DO NOT OPERATE THIS PRODUCT WITHOUT ALL THE DUCTWORK ATTACHED.

This CMXV air handler is designed for a complete supply and return ductwork system.

This unit is rated and certified as a mid-static blower-coil system under AHRI Standard 210/240.
The rated operating range is based on the cooling configuration only, with a specified full-load airflow not exceeding 400 scfm per ton and an external static pressure between 0.21 and 0.6 in H_2O.

When installed with an optional electric heater kit, the system may require higher airflow and external static pressure to maintain acceptable heater element temperature limits. Operation under those conditions is outside the scope of the AHRI performance rating.
The base system classification and AHRI rating apply only to cooling and heat pump operation without the heater energized. Refer to ACCA Manual D, Manual S and Manual RS for information on duct sizing and application. Flame retardant ductwork is to be used and sealed to the unit in a manner that will prevent leakage.

NOTE: A downflow application with electric heat must have an L-shaped sheet metal supply duct without any outlets or registers located directly below the heater.

9.1 Return Ductwork

For appliances using R-32 REFRIGERANTS, connected via an air duct system to one or more rooms, the supply and return air shall be directly ducted to the space. Open areas such as false ceilings shall not be used as a return air duct.

For mechanical ventilation the lower edge of the air extraction opening where air is exhausted from the room shall not be more than 100 mm above the floor. The location where the mechanical ventilation air extracted from the space is discharged shall be separated by a sufficient distance, but not less than 3 m, from the mechanical ventilation air intake openings, to prevent re-circulation to the space.

DO NOT LOCATE THE RETURN DUCTWORK IN AN AREA THAT CAN INTRODUCE TOXIC, OR OBJECTIONABLE FUMES/ODORS INTO THE DUCTWORK. The return ductwork is to be connected to the CMXV air handler bottom (upflow configuration).

10 RETURN AIR FILTERS

Each installation must include a return air filter. This filtering may be performed at the CMXV air handler using the factory filter rails or externally such as a return air filter grille measured with a nominal 16x20x1”. Washable versions are available through your local Daikin distributor.

NOTE: If installing a filter, an external filter must be used when installing the unit in Horizontal Right (Figure 6), or if the side drain pan is not removed for Down Flow application. A filter will not fit on the internal filter rails in these applications.

IMPORTANT NOTE: If appliance is equipped with UVC coil and air purifier, turn off the appliance before opening filter access door panel to change and install filter.

11 ELECTRIC HEAT

Refer to the installation manual provided with the electric heat kit for the correct installation procedure. All electric heat must be field installed. If installing this option, the ONLY heat kits that are permitted to be used are the Daikin produced HKTS series. Refer to the CMXV*unit’s Serial and Rating plate or the HKTS specification sheets to determine the heat kits compatible with a given CMXV air handler. No other accessory heat kit besides the HKTS series may be installed in these air handlers. Refer to Table 7 for absolute minimum allowable airflow for CMXV air handler and heat kit combination.

Before installing the Heat Kit, disconnect the harness from S101 connector on PCB (refer to wiring diagram). Accommodate the wires on the bottom of the blower deck assy. Disconnect the 12 pin harness (PL3 and PL4 as shown on wiring diagram) to facilitate access. Follow the instructions on the Heat Kit installation manual. Once Heat kit is installed reconnect all the harnesses that were disconnected previously.

The heating mode temperature rise is dependent upon the system airflow, the supply voltage, and the heat kit size (kW) selected. Use data provided in Tables 5 and 6 to determine the temperature rise (°F).

For installations not indicated above the following formula is to be used:

TR = (kW x 3412) x (Voltage Correction) / (1.08 x CFM)

Where:	TR	=	Temperature Rise
	kW	=	Heater Kit Actual kW
	3412	=	Btu per kW
	VC*	=	1.0 (240 Supply Volts)
		=	.92 (230 Supply Volts)
		=	.84 (220 Supply Volts)
		=	.77 (210 Supply Volts)
		=	.75 (208 Supply Volts)
	1.08	=	Constant
	CFM	=	Measured Airflow

**VC (Voltage Correction)*

***For heater kit selection see section 17.**

CFM	HEAT KIT NOMINAL KW				
	3	5	6	8	10
400	23	38	45	-	-
600	15	25	30	40	-
800	11	19	23	30	38
1000	9	15	18	24	30
1200	8	13	15	20	25
1400	6	11	13	17	22

Table 5 - 230/1/60 SUPPLY VOLTAGE - TEMP. RISE ºF

CFM	HEAT KIT NOMINAL KW				
	3	5	6	8	10
400	21	34	41	-	-
600	14	23	27	37	46
800	10	17	21	27	34
1000	8	14	16	22	27
1200	7	11	14	18	23
1400	6	10	12	16	20

Table 6 - 208/1/60 SUPPLY VOLTAGE - TEMP. RISE ºF

ELECTRIC HEAT AIRFLOW TABLE			
HTR KW	CMXV12AVJUA	CMXV18AVJUA	CMXV24AVJUA
3	400	600	NR
5	450	650	800
8	NR	700	800
10	NR	NR	850

Table 7 - Electric Heat Airflow Table

NOTE: The Temperature Rise Tables can also be used to estimate the CMXV air handler airflow delivery. When using these tables for this purpose set the room thermostat to maximum heat and allow the system to reach steady state conditions. Insert two thermometers, one in the return air and one in the supply air. The temperature rise is the supply air temperature minus the return air temperature. Using the temperature rise calculated, CFM can be estimated from the TR formula above.

12 ELECTRICAL AND CONTROL WIRING

IMPORTANT: All routing of electrical wiring must be made through provided electrical knockouts. When removing the electrical knockouts, take care not to damage the PCB. Do not cut, puncture or alter the cabinet for electrical wiring.

12.1 Building Electrical Inspection

This unit is designed for single-phase electrical supply only. DO NOT OPERATE CMXV AIR HANDLER ON A THREE-PHASE POWER SUPPLY. Measure the power supply to the unit. The supply voltage **must** be measured and be in agreement with the unit nameplate power requirements and within the range shown. Refer to Table 8.

Nominal input	Minimum Voltage	Maximum Voltage
208/230 VAC	197	253

ELECTRICAL VOLTAGE
Table 8

12.2 Wire Sizing

Wire size is important to the operation of your equipment. Use the following check list when selecting the appropriate wire size for your unit.

- **Wire used must be sized to carry the Minimum Circuit Ampacity (MCA) listed on the equipment's Serial and Rating Plate.**
- Refer to the NEC (USA) or CSA (Canada) for wire sizing. The unit MCA for the CMXV air handler and the optional electric heat kit can be found on the unit Serial and Rating Plate.
- **Wire must be sized to allow no more than a 2% voltage drop from the building breaker/fuse panel to the unit.**
- Wires with different insulation temperature rating have varying ampacities - be sure to check the temperature rating used.
- Refer to the latest edition of the National Electric Code or in Canada the Canadian Electric Code when determining the correct wire size.

12.3 Maximum Overcurrent Protection (MOP)

Every installation must include an NEC (USA) or CEC (Canada) approved overcurrent protection device. Also, check with local or state codes for any special regional requirements. Protection can be in the form of fusing or HACR style circuit breakers. The Serial and Rating Plate provides the maximum overcurrent device permissible.

NOTE: Fuses or circuit breakers are to be sized larger than the equipment MCA but not to exceed the MOP.

NOTE: Some transformers are equipped with an overcurrent protection switch. If the unit experienced a surge, check that the switch on the transformer is closed.

12.4 Electrical Connections – Supply Voltage

IMPORTANT NOTE: USE COPPER CONDUCTORS ONLY.

Knockouts are provided on the CMXV air handler top panel and sides of the cabinet to allow for the entry of the supply voltage conductors, as shown in Figure 17. Separate knock-outs must be used for two circuit Heat-kits. If the knockouts on the cabinet sides are used for electrical conduit, an adapter ring must be used in order to meet UL 60335-2-40 safety requirements. An NEC or CEC approved strain relief is to be used at this entry point. Some codes/municipalities require the supply wire to be enclosed in conduit. Consult your local codes.

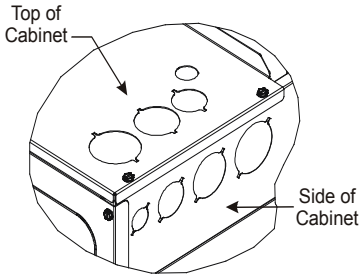

KNOCK-OUT FOR ELECTRICAL CONNECTIONS
Figure 17

Primary power is supplied from the outdoor unit. Use 14AWG wire and route wires from the terminal block on the outdoor unit and connect to the terminal block of the indoor unit, as shown on section 12.6.

12.4.1 **CMXV** *Air Handler Only (Non-Heat Kit Models)*

IMPORTANT: Installation of CMXV Air Handler must follow any local codes/regulations. For installations with two or more CMXV air handlers, where the power supply is connected to the stripped black and red wires contained in the CMXV air handler electrical compartment, a field supplied disconnect switch or breaker must be installed in the electrical circuit that will allow power to be shut-off for service or maintenance.

The selected terminal block on the Outdoor unit must be connected to the terminal block contained in the CMXV air handler electrical compartment. Attach the supply wires to the CMXV air handler conductors as shown in the unit wiring diagram using appropriately sized solderless connectors or other NEC or CEC approved means.

One CMXV* unit can be powered directly by the OD. If the installation requires multiple CMXV**AVJUA units to be connected to one OD then an alternative wiring method must be used. The following instructions must be followed for the alternative method:

1. Familiarize yourself with the CMXV air handler wire diagram.
2. Unplug the harness connector PL-5 from the X28A port on the PCB.
3. Connect PL-5 to PL-6. Refer to wiring diagram detail 1 and note 11 for further details.
4. The power supply connects to the stripped black and red wires contained in the CMXV air handler electrical compartment. Attach the supply wires

to the air handler conductors as shown in the unit wiring diagram using appropriately sized solderless connectors or other NEC or CEC approved means.

5. A ground lug is also provided in the electrical compartment. The ground wire from the power supply must be connected to this ground lug.

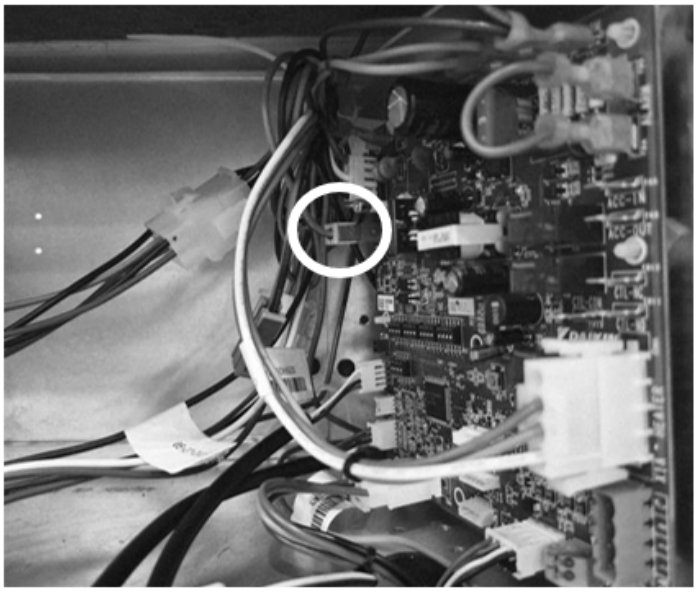

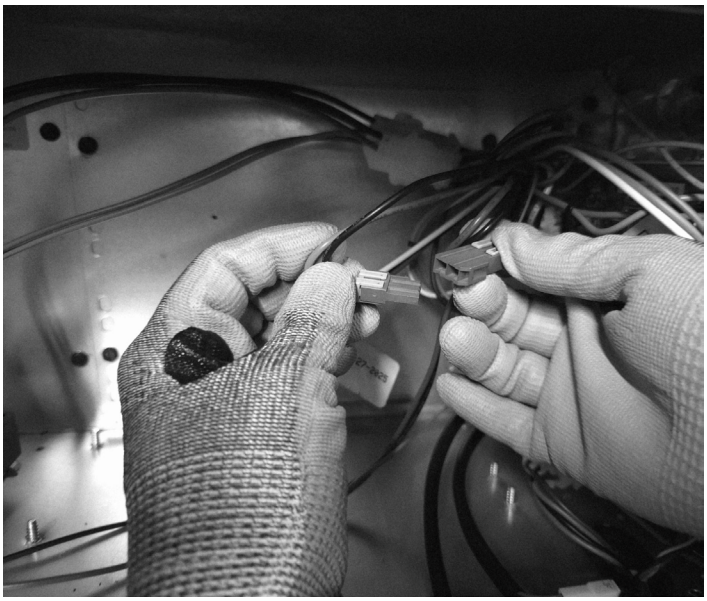

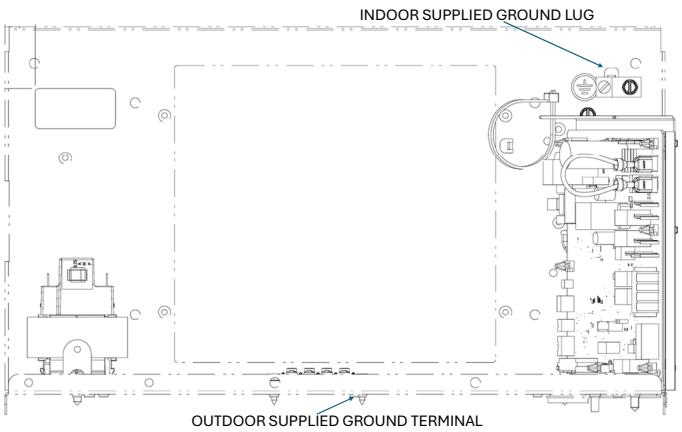

Schematic 1

Heater kits can be installed on either connection method (OD unit only or OD unit only + additional power supply). Follow the instruction from section 12.4.2 or 12.4.3 depending on the heater kit being installed.

CAUTION

FIRE HAZARD! To avoid the risk of property damage, personal injury or fire, use only copper conductors.

WARNING

HIGH VOLTAGE
Disconnect all power before servicing or installing this unit. Multiple power source may be present. Failure to do so may cause property damage, personal injury or death.

WARNING

High Voltage!
To avoid property damage, personal injury or death due to electrical shock, this unit MUST have an uninterrupted, unbroken electrical ground. The electrical ground circuit may consist of an appropriately sized electrical wire connecting the ground lug in the unit control box to the building electrical service panel.
Other methods of grounding are permitted if performed in accordance with the National Electric Code (NEC)/American National Standards Institute (ANSI)/National Fire Protection Association (NFPA) 70 and local/state codes. In Canada, electrical grounding is to be in accordance with the Canadian Electric Code (CSA) C22.1.

12.4.2 CMXV Air Handler - Non-Circuit Breaker Heat Kits

A terminal block is provided with the HKTS kit to attach the power supply and CMXV air handler connections. Follow the HKTS Installation Manual and wiring diagram for complete wiring details.

12.4.3 CMXV Air Handler With Circuit Breaker Heat Kit

The CMXV air handler has a soft plastic cover on the upper access panel and can be removed to allow the heater kit circuit breaker to be installed. The circuit breakers have lugs for power supply connection. See the HKTS Installation Instructions for further details.

12.5 General Instructions

- Make certain that all electric wiring work is carried out by qualified personnel according to the applicable legislation and this installation manual, using a separate dedicated circuit. Insufficient capacity of the power supply circuit or improper electrical construction may lead to electric shock or a fire.
- Make sure to install a ground fault circuit interrupter. Failure to do so may cause electric shock and a fire.
- Do not turn on the power supply (branch switch, branch overcurrent circuit breaker) until all the works are finished.
- Multiple number of indoor units are connected to one outdoor unit. Name each indoor unit as A-unit, B-unit ….. and the like. When these indoor units are wired to the outdoor unit, always wire the indoor unit to the terminal indicated with the same symbol on the terminal block. If the wiring and the piping are connected to the different indoor units and operated, it will result in malfunction.
- Make sure to ground the indoor unit. Grounding resistance should be according to applicable legislation.
- Do not connect the ground wiring to gas or water pipings, lightning conductor or telephone ground wiring.
- Ignition or explosion may occur if the gas leaks.
- Hard vinyl tubes are not effective grounds. (i.e drain pipes).
- For electric wiring work, refer to also the “WIRING DIAGRAM” attached to the blower access panel.
- Carry out wiring between the outdoor units, indoor units and the thermostat according to the wiring diagram.
- Carry out installation and wiring of the thermostat as per the thermostat installation manual.

WARNING

Do not use tapped wires, extension cords, or starburst connections, as they may cause overheating, electric shock, or fire. Do not use locally purchased electrical parts inside the product. (Do not branch the power for the drain pump, etc., from the terminal block.) Doing so may cause electric shock or fire only connect od power to the terminal block, or id power to the heater kit harness provided with the unit, failure to do so may cause electric shock or fire.

CAUTION

When clamping wiring, use the included clamping material to prevent outside pressure being exerted on the wiring connections and clamp firmly. When installing the wiring, make sure the wiring is neat and does not cause the electrical wiring box cover to stick up, then close the cover firmly. Outside the unit, separate the low voltage wiring (remote controller wiring) and high voltage wiring (wiring between units, ground, and other power wiring) at least 2 in. so that they do not pass through the same place together. Proximity may cause electrical interference, malfunctions, and breakage.

12.6 Wiring Example

For the wiring of outdoor units, refer to the installation manual attached to the outdoor units.

Confirm the system type.

- Multi system: 2 through 6 (The number of connectable units will vary according to model) indoor units connect to 1 outdoor unit. The indoor unit is controlled by remote controller connected to each indoor unit.

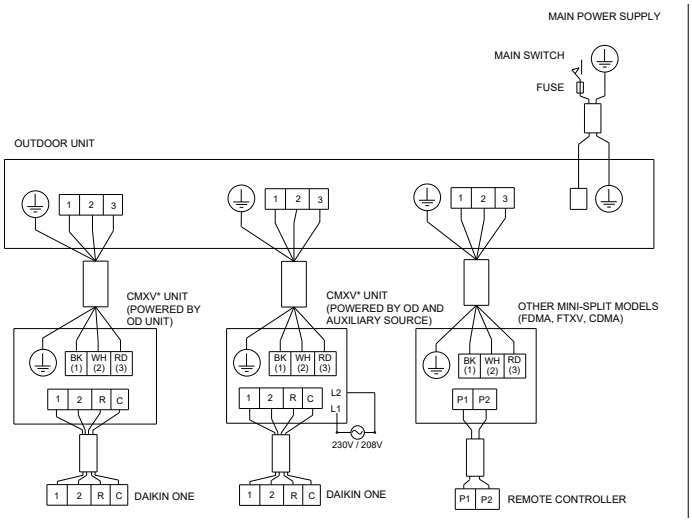

Figure 18 - CMXV Wiring Example

NOTE:

1. All transmission wiring except for the remote controller wires is polarized and must match the terminal symbol.
2. If a shielding wire is to be used, ensure the shielded portion is connected to the remote controller terminal block.
3. Refer to section 12.9 for thermostat wiring.

12.6.1 Specification for Field Wire

	Wire	Size	Length
Wiring between units	Recommend standard and shielded. local code supersedes recommendation.	AWG 14	Max 98ft (30m)
Thermostat wiring	Sheathed (4 wires)	AWG 18 - 16	Max. 125ft (38m)*
Wiring to ground terminal	Recommended stranded and shielded. Local code supersedes recommendation.	-----	-----

Table 9

*this will be the total extended length in the system when doing group control.

12.6.2 Wiring Connection Method

CAUTION

Recommend stranded cable for interunit wiring. Local code always supersedes recommendation.

- **For stranded wires, make sure to use the round crimp-style terminal for connection to the power supply terminal block. Place the round crimpstyle terminals on the wires up to the covered part and secure in place.**
- **If solid core wire must be used, be sure to curl the end of the lead. Improper work may cause heat and fire.**

Tightening torque for the terminal blocks

- Use the correct screwdriver for tightening the terminal screws. If the blade of screwdriver is too small, the head of the screw might be damaged, and the screw will not be properly tightened.
- If the terminal screws are tightened too hard, screws might be damaged.
- Ensure terminal block screws are tightened to between 0.92 - 1.0 lbf * ft (1.24 - 1.35 N * m)

12.7 Low Voltage Connections

Use N.E.C Class 2 Wire. The 24V-control voltage connects the CMXV air handler to the room thermostat 24V only for Daikin *One* thermostat. Typical 18 AWG thermostat wire may be used to wire the system components. Ninety eight (98) feet is the maximum length of wire between indoor unit and outdoor unit, and one hundred twenty five (125) feet between indoor unit and thermostat. Low voltage wiring must be copper conductors. Low voltage wiring must be connected through the top of the cabinet or either side. See the “Daikin *One* Thermostat Wiring” section of this manual for typical low voltage wiring connections.

12.8 Leak Detection Output (Relay K6R)

The control board [A2P] is equipped with three Refrigerant Leak Detection terminals, labeled TB11, TB12 and TB13 that are used for the control of optional kits (UV light, ventilator) when a refrigerant leak is detected, the error codes being A0-19, A0-17 or CH-11. Between TB12 and TB13 are normally closed, TB11 and TB13 are normally opened. When the A0-19, A0-17 or CH-11 error is issued, TB12-TB13 is open, and TB11-TB13 is closed. See the table 10 for the conditions of relay K6R when the error code is issued. This output can be used to turn off UV lights, or activate ventilation if an A0-19, A0-17, or CH-11 error code is issued. Once these error codes are cleared, these outputs will return to their normal state after 5 minutes.

See the Table 10 for the specification for relay K6R and Figure 19 for the wiring diagram and the terminal’s location.

Items	When A0-19, A0-17 CH-11 not issued	When A0-19, A0-17 CH-11 issued	Maximum Load (Type / Voltage / Current)
TB12-TB13 (NC)	CLOSE	OPEN	PILOT/24 VAC/1.1 A
TB11-TB13 (NO)	OPEN	CLOSE	PILOT/24 VAC/1.1 A

Relay K6R when A0/A1/AF is issued

Table 10

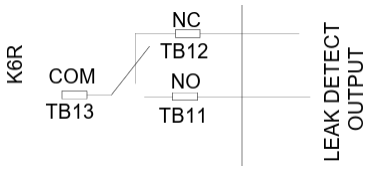

Figure 19

12.8.1 Refrigerant Leak Test

Refrigerant Leak Test allows manual activation of Relay K6R to verify that the optional kits connected to the relay operate properly. When the relay is closed, and the UV light should turn off. Perform the test using one of the following procedures.

1. Via Dip Switches on Indoor Unit PCB
   Refer to the following table to configure the dip switch [DS5] to start the Refrigerant Leak Test. The test will automatically end after the time specified in the table has elapsed, regardless of the DIP switch setting. To restart the test, set both switches 3 and 4 to OFF, then reconfigure the switches as needed.

DIPSW	Switches		Refrigerant Leak Test
	3	4	
DS5	OFF*	OFF*	OFF*
	OFF	ON	ON (60 mins)
	ON	OFF	ON (120 mins)
	ON	ON	ON (180 mins)

2. Via Daikin *One* Thermostat
   From the commissioning menu of Daikin *One* Thermostat, navigate to “3. Equipment”, then select “indoor unit”, and open “field setting”. Select “Field Setting 13” and refer to the table below to adjust the setting and initiate the Refrigerant Leak Test. The test will automatically end once the time specified in the table has elapsed.

Field Setting Number	Selection	Refrigerant Leak Test
13	0*	OFF*
	1	ON (60 mins)
	2	ON (120 mins)
	3	ON (180 mins)

CAUTION

Do not change any other dip switches other than DS5-3 and DS5-4. Incorrect settings may cause any error. For default setting, see Figure 22a.

12.9 Wiring for Daikin One Thermostat

NOTE: Refer to section Electrical Connections for 208/230 volt line connections to the CMXV air handler.

NOTE: It is **STRONGLY** recommended that no more than two wires be connected in a single terminal. If two wires are used in a terminal, it is recommended the same type of wire be used (i.e. Both stranded or solid for secure connection). Failure to do so may result in intermittent operation.

Typical 18 AWG thermostat wire may be used to wire the system components. One hundred twenty five (125) feet between indoor unit and thermostat.

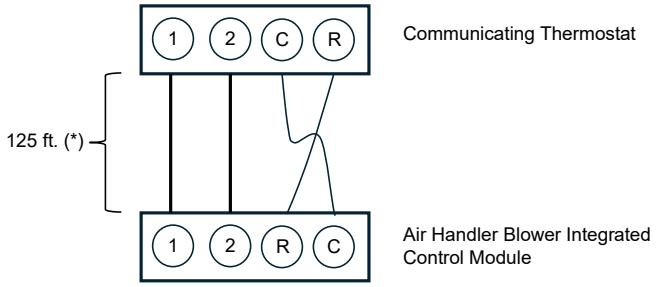

(*) Allowable Maximum Length

SYSTEM WIRING
Figure 20

NOTE: For a detailed procedure of thermostat commissioning process, please visit the Daikin *One+* website at http://www.daikinone.com.

13 ACHIEVING 1.4% AND 2.0% AIRFLOW LOW LEAKAGE RATE

Ensure all the gaskets remain intact on all surfaces as shipped with the unit. These surfaces are areas between the upper tie plate and coil access panel, blower access and coil access panels, and between the coil access and filter access panels. Ensure upon installation, that the plastic breaker cover is sitting flush on the blower access panel and all access panels are flush with each other and the cabinet. With these requirements satisfied, the unit achieves less than 1.4% airflow leakage @ 0.5 inch wc static pressure and less than 2% airflow leakage @1inch wc static pressure when tested in accordance with ASHRAE Standard 193.

IMPORTANT: After installing the heater kits, it is very important to seal the gap between the circuit breaker and the cover. Putty paste or gasket can be used to seal the gap so that air leakage can be minimized. Ensure both liquid and gas piping is sealed.

14 REFRIGERATION DETECTION SYSTEM (RDS)

Function: Refrigerant Detection System (RDS) is installed in this equipment to detect any R32 leakage in the coil and take action to mitigate any risk of ignition/ fire.

Operation: When there is a leak detected, the RDS shall send signals for the unit to perform these actions:

1. Turn on the blower to circulate air with Mitigation CFM
2. Switch off electric heater
3. Error code A0 issued
4. Fully open damper (*1)
5. Switch off UV light (*1)

Serial Plate Information: The installer must write the maximum possible refrigerant charge and the minimum room area on serial plate. Use table 12 to determine the maximum possible refrigerant charge and minimum room area based

on the total system refrigerant charge. If the installation is not at sea level, consult section 14.1 to determine how to adjust the minimum air conditioned room area. Write the minimum air conditioned room area on the serial plate under the minimum room area field. Use a durable marking instrument to write the values on the serial plate.
The installers are responsible for verifying that actuation of mitigation procedures are operational with the minimum required airflow for mitigation.

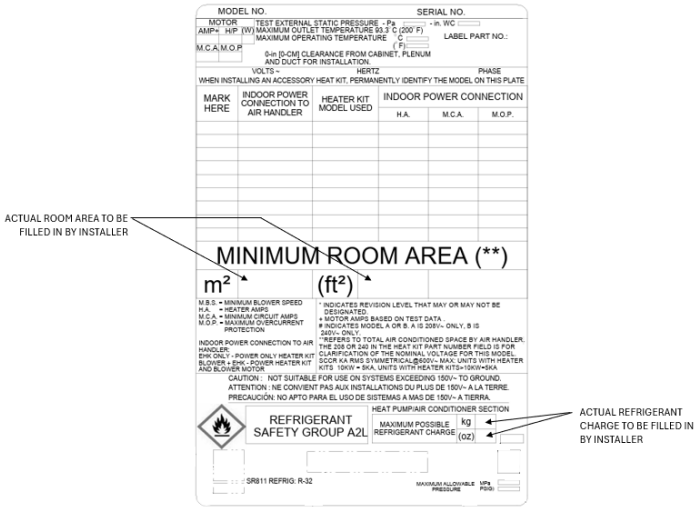

Figure 21

(*1) If UV lamp is installed in the field, be sure to use the "15.5 Leak detection output" function and construct the wiring so that they will activate as mentioned above when a leak is detected.

Servicing: Before servicing identify the Mode of operation of the system by reading the error listed on the thermostat. After identifying the mode of operation take recommended actions as specified in Table DIAGNOSTIC CODES.

Instruction to replace PCB: Take off the blower access panel, disconnect the PCB harness and A2L sensor wire connected to the PCB, detach the defective PCB from all of the plastic standoffs, install new PCB with new plastic standoff which is installed on metal bracket, re-connect the PCB harness and A2L sensor wire to the new PCB per wiring instruction as attached to the equipment, reassemble the blower access panel to the unit.

Instruction to replace A2L sensor: Take off the blower access panel and coil access panel, take off the drain port gasket on the drain pan in front of the sensor bracket, disconnect the A2L sensor wire from the PCB, take off sensor bracket assembly from the drain pan, remove plastic push pins and non-function A2L sensor off the sensor bracket, install new A2L sensor and plastic push pins to sensor bracket, re-install A2L sensor bracket assembly to the drain port correctly as shown in the figures 2, 3, 5 and 6. The "FRONT 0121A*****" print on sensor bracket should be facing away from the equipment, place gaskets back to the drain ports correctly. The "FRONT" print on the gaskets should be in the front facing away from the equipment, reassemble the blower access panel and coil access panel to the unit. Refrigerant sensors for refrigerant detection systems shall only be replaced with sensors specified by the appliance manufacture.

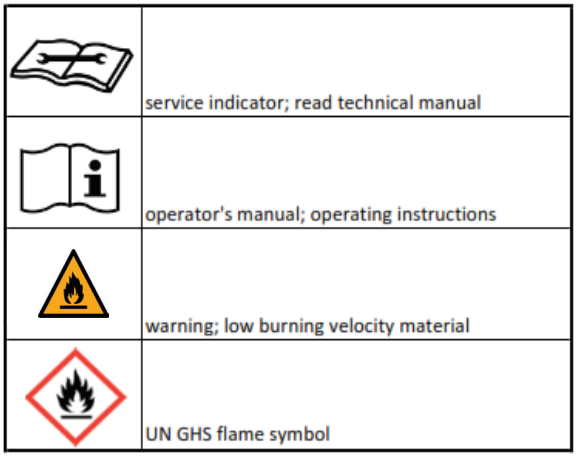

Marking Symbol Table

Mitigation CFM: When one of the error codes A0-17/A0-19/CH-11 that is related to refrigerant leak detection system is issued, the blower is activated with the mitigation CFM above the Qmin shown in Table 12 (around 300 CFM).

Total System Refrigerant Charge (oz)	Maximum Possible Refrigerant Charge (oz)	Maximum Possible Refrigerant Charge (kg)	Minimum Air Conditioned Room Area (ft2)	Minimum Air Conditioned Room Area (m2)	Minimum Required Mitigation Airflow (CFM)	Minimum Required Mitigation Airflow (m3/hr)
31~50	50	1.42	46	4.22	83	140
51~100	100	2.84	91	8.44	165	279
101~150	150	4.26	137	12.66	247	418
151~200	200	5.67	182	16.85	328	556
201~250	250	7.09	227	21.07	410	696
251~300	300	8.51	273	25.29	492	835
301~350	350	9.93	318	29.51	574	974
351~400	400	11.34	363	33.69	655	1112
401~450	450	12.76	409	37.91	737	1251
451~500	500	14.18	454	42.13	819	1391
501~550	550	15.60	499	46.35	901	1530
551~600	600	17.01	545	50.54	982	1668

Table 12 - A2L Mitigation Table

14.1 Altitude Adjustment Factor

For altitudes other than at sea level, adjust the minimum room area specified on the Serial Plate by the corresponding altitude adjustment factor shown below. This table is provided as a reference. Adjusted room area (Amin adj) is the product of the minimum room area specified in the serial plate and the adjustment factor AF, as shown in below formula.

Amin adj = Amin (as per table 12) * AF

Height in Meters	Height in Feet	Altitude Adjustment Factor (AF)
At sea level	At sea level	1
1~200	1~660	1.02
200~400	660~1320	1.03
400~600	1320~1970	1.05
600~800	1970~2630	1.07
800~1000	2630~3290	1.09
1000~1200	3290~3940	1.11
1200~1400	3940~4600	1.13
1400~1600	4600~5250	1.15
1600~1800	5250~5910	1.17
1800~2000	5910~6570	1.19
2000~2200	6570~7220	1.21
2200~2400	7220~7880	1.24
2400~2600	7880~8540	1.26
2600~2800	8540~9190	1.29
2800~3000	9190~9850	1.31
3000~3200	9850~10500	1.34

Table 13 - Altitude adjustment factor

NOTE: The altitude adjustment factor (AF) for any altitudes below sea level will be 1.00.

15 MISCELLANEOUS START-UP CHECKLIST

- Prior to start-up, ensure that all electrical wires are properly sized and all connections are properly tightened.
- All panels must be in place and secured. For Air Tight application, gasket must be positioned at prescribed locations to achieve 2% leakage. When reattaching tubing panel, ensure that the seal, both liquid and gas piping, is replaced by the insulation provided in the literature kit to maintain system performance and prevent condensation.
- Tubing must be leak free.
- Condensate line must be trapped and pitched to allow for drainage.
- Auxiliary drain is installed when necessary and pitched to allow for drainage.
- Low voltage wiring is properly connected.
- Unit is protected from vehicular or other physical damage.
- Return air is not obtained from, nor are there any return air duct joints that are unsealed in, areas where there may be objectionable odors, flammable vapors or products of combustion such as carbon monoxide (CO), which may cause serious personal injury or death.
- Ensure the Flare Nuts are torqued to specification.
- Ensure that Mitigation mode is operational before commissioning the unit.

IMPORTANT NOTE: If thumb screws are used to access the filter, ensure the washer installed on the screw behind the access panel remains in place after re-installation.

NOTE: A removable plug connector is provided with the control to make thermostat wire connections. This plug may be removed, wire connections made to the plug, and replaced. It is STRONGLY recommended that you do not

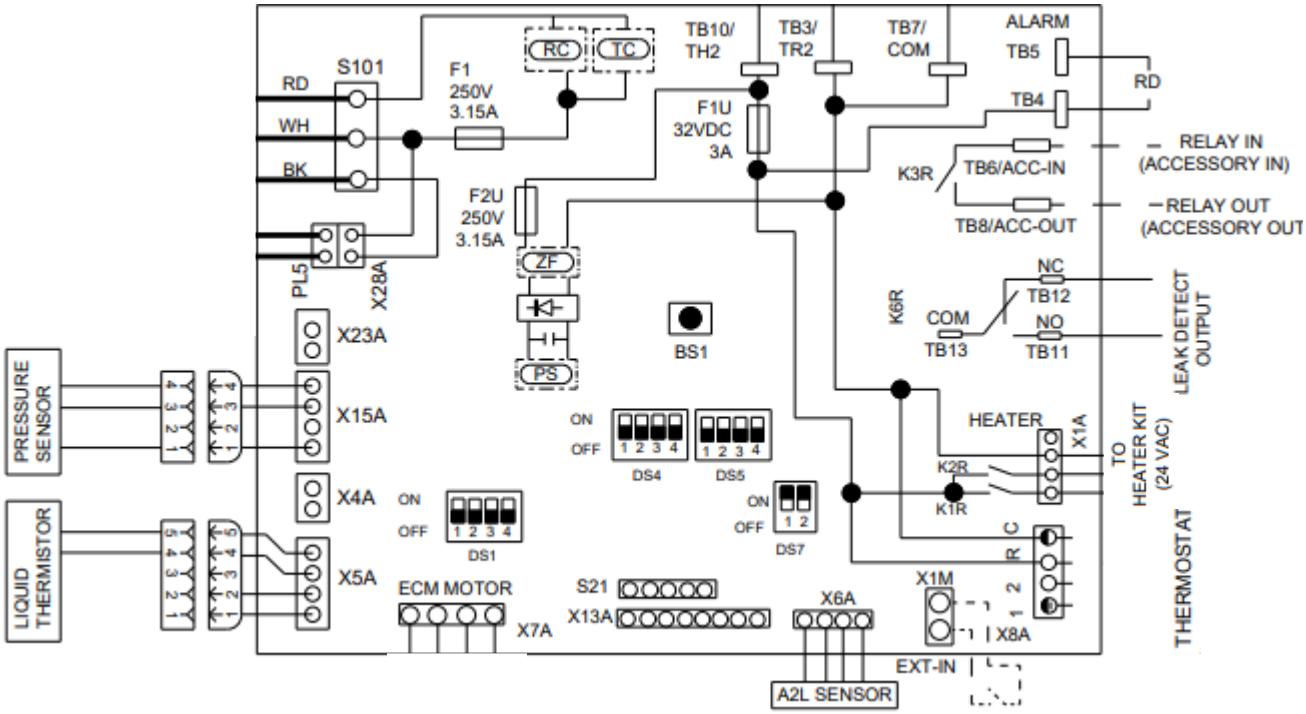

Indoor Unit Communicating Board (PCB)

Figure 22a

connect multiple wires into a single terminal. Wire nuts are recommended to ensure one wire is used for each terminal. Failure to do so may result in intermittent operation.

15.1 Auxiliary Alarm Switch

The control is equipped with two Auxiliary Alarm terminals, labeled TB4 and TB5 which are typically utilized in series with a condensate switch but could also be used with compatible CO_2 sensors or fire alarms.

The auxiliary alarm switch must be normally closed and open when the alarm occurs. For example, a normally closed condensate switch will open when the base pan's water level reaches a particular level. The control will respond by turning off the blower motor and outdoor unit and displaying the proper fault codes. If the switch is later detected closed for 30 seconds, normal operation resumes and the error message is removed. (The switch is closed as part of the default factory setting.) The error will be maintained in the equipment's fault history. See Figures 22a and 22b for the connection location.

IMPORTANT NOTE: If any refrigerant leak detection-related error codes (A0-17, A0-19, or CH-11) are detected simultaneously, the system will prioritize the actions associated with the leak detection error—specifically, turning on the fan and energizing Relay K6R. The field setting is available to prioritize the actions of auxiliary alarm. Refer to [16.3 Error Priority Setting] for details.

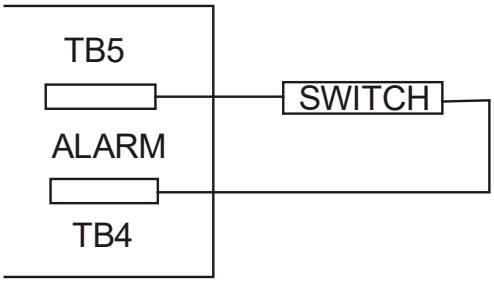

Figure 22B

15.2 Accessory Contacts (Humidifier Relay)

A closed relay indicates continuity between the two terminals. The control does not provide power to these contacts.
Connect humidistat to the x1m connector on pcb so that the air handler receives the input from humidistat.

Wire Specification	Sheathed Vinyl Cord or Cable (2 wires)
Gauge	AWG 18-16
Length	Max. 328 ft
External Terminal	Contact that can ensure the minimum applicable load of 16V DC, 1mA.

Table 14

The accessory relay terminals support four operational modes below for humidification. Refer to [17 field setting] in the thermostat to choose the setting for accessory contacts.

1: Heat on
The relay closes when both heating is on and air handler receives an input from x1m.
2: Independent
The relay closes when air handler receives an input from x1m.
3: Fan
The relay closes when the indoor unit's fan is operating.
4: None (factory setting)
The relay remains open; it never closes.

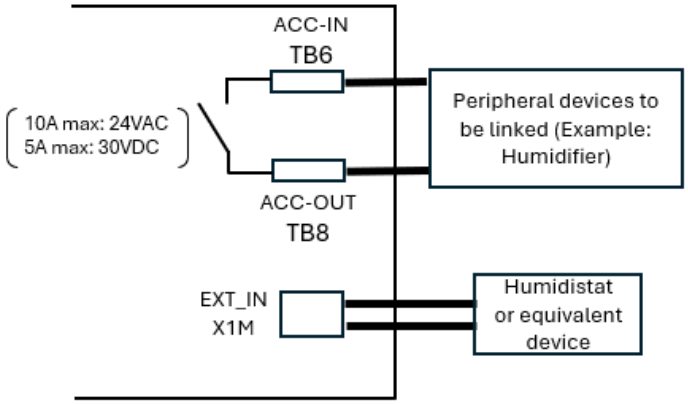

Figure 23 - Accessory Contacts

NOTE: The Accessory Relay is not forced to open when a refrigerant leak is detected or when a malfunction occurs in the A2L sensor (i.e., when error codes A0-17, A0-19 or CH-11 are issued). If it is necessary to enable the Accessory Relay to open while the above error codes are issued, the following wiring connection between the Accessory Relay and Leak Detection Output (relay K6R) can be implemented. The wire harness between ACC-OUT (TB8) and COM (TB12) must be prepared separately at the field.

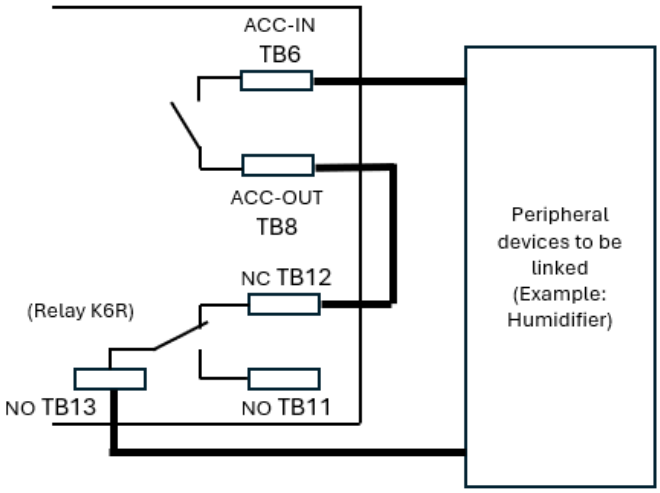

Figure 24 - Accessory Contacts

16 SETTING

After turning on the power supply, adjust the field settings according to the installation conditions. To access the field setting menu, from the commissioning menu of Daikin *One* Thermostat, navigate to “3. Equipment”, then select “indoor unit”, and open “field setting”.

- The settings marked with an asterisk (*) in the following tables are the factory default settings.
- Do not change any settings other than those listed in the table.

16.1 Heater Kit Selection

Refer to the table below to set the Heater Kit Selection from the Daikin *One* Thermostat according to the capacity of the installed heater kit.

Field Setting Number	Selection	Heater Kit Wattage (kW)		
		CMXV12	CMXV18	CMXV24
5	0*	NO HEATER*		
	1	3	3	5
	2	5	5	8
	3	-	8	10

Table 15

16.2 Accessory Contacts

Refer to the table below to choose the accessory contacts setting from the Daikin *One* Thermostat. The details for each setting is described in [15.2 Accessory Contacts (Humidifier Relay)].

Field Setting Number	Selection	Accessory Contacts Setting
9	0	Heat ON
	1	Independent
	2	Fan
	3*	NONE*

Table 16

16.3 Error Priority Setting

This setting is used to stop the indoor unit’s fan operation when both a refrigerant leak is detected and a fire alarm (or similar devices) connected to auxiliary alarm terminals is triggered.

By default, leak detection errors (A0-17/A0-19/CH-11) take priority over the auxiliary alarm error (A0-01). When the fire alarm is connected to the auxiliary alarm terminals and both leak detection error and auxiliary alarm error occur simultaneously, the indoor unit’s fan continue operating to mitigate the refrigerant leak. This airflow could potentially spread the fire. If a fire alarm is installed and connected to the auxiliary alarm terminals, it is recommended to adjust the setting to prioritize the auxiliary alarm error over the leak detection error, to ensure that the indoor unit’s fan does not operate in the event of a fire.

Field Setting Number	Selection	Error Priority Setting
11	0*	Refrigerant Leak Detection Error Priority*
	1	Auxiliary Alarm Error Priority

Table 17

17 TROUBLESHOOTING

17.1 Electrostatic Discharge (ESD) Precautions

NOTE: Discharge body’s static electricity before touching unit. An electrostatic discharge can adversely affect electrical components.

Use the following precautions during CMXV air handler installation and servicing to protect the integrated control module from damage. By putting the CMXV air handler, the control, and the person at the same electrostatic potential, these steps will help avoid exposing the integrated control module to electrostatic discharge. This procedure is applicable to both installed and uninstalled (ungrounded) blowers.

1. Disconnect all power to the blower. Do not touch the integrated control module or any wire connected to the control prior to discharging your body’s electrostatic charge to ground.
2. Firmly touch a clean, unpainted, metal surface of the CMXV air handler blower near the control. Any tools held in a person’s hand during grounding will be discharged.
3. Service integrated control module or connecting wiring following the discharge process in step 2. Use caution not to recharge your body with static electricity; (i.e., do not move or shuffle your feet, do not touch ungrounded objects, etc.). If you come in contact with an ungrounded object, repeat step 2 before touching control or wires.
4. Discharge your body to ground before removing a new control from its container. Follow steps 1 through 3 if installing the control on a blower. Return any old or new controls to their containers before touching any ungrounded object.

17.2 Diagnostic Chart

Refer to the Troubleshooting table at the end of this manual for assistance in determining the source of unit operational problems. The Daikin One Thermostat will provide any active fault codes.

TROUBLESHOOTING

Error Code	Description	Possible Causes	Corrective Actions
A0-17	Refrigerant Leak Error (Confirmed)	· Refrigerant leak · A2L sensor failure	· Ventilate the room before conducting any actions · Check coil leakage · Remove refrigerant from system and replace coil
CH-14	A2L Sensor Communication Error	· A2L sensor is not connected · Incorrect wiring of A2L sensor	· Check the connection of A2L sensor · Replace A2L sensor
CH-11	A2L Sensor Internal Error	· A2L sensor failure	· Replace A2L sensor · Replace control board
A0-19	Refrigerant Leak Error (Monitoring)	· Refrigerant leak · A2L sensor failure	· If the leak has subsided, the error will disappear after 5 minutes · Ventilate the room before conducting any actions · Check coil leakage · Remove refrigerant from system and replace coil
A0-01	AUX Alarm Error	· High water level in the evaporation coil · The connected alarm device is activated · Auxiliary Alarm terminals (TB4, TB5) are open	· Check water level in drain pan · Check alarm device · Close Auxiliary terminals TB4 and TB5 if not used. After recovering the system, AUXILIARY CONTACTS OPEN will still be displayed on the thermostat for up to 45 seconds. It will be cleared automatically.
A1-00	EEPROM Error	· No EEPROM in control board · Incorrect EEPROM in control board	· Replace control board
AJ-00	Capacity Setting Error	· No capacity setting in control board · Invalid DIPSW settings for DS1	· Check the DIPSW setting of DS1
C1-07	Blower Motor Communication Error	· Incorrect / loose wiring · Power interruption (low voltage)	· Check wiring or tighten wiring connections if needed · Verify the input voltage at the motor · Replace circuit board or motor
C6-01	Blower Motor ID and HP Mismatch Error	· Incorrect size motor · Invalid shared data	· Correct motor installation · Populate shared data set using memory card
A6-00	Blower Motor Not Running	· Fan Motor Obstruction · Power Interruption (low voltage) · Incorrect / loose wiring	· Check for obstruction on the fan/motor · Verify the input voltage at the motor · Check wiring or tighten wiring connections if needed · Replace circuit board or motor

TROUBLESHOOTING

Error Code	Description	Possible Causes	Corrective Actions
U5-00	Remote Controller Communication Error	· Incorrect wiring between ID unit and thermostat. · Thermostat failure · Power interruption (low voltage)	· Check for thermostat and indoor unit wiring · Verify the input voltage at the ID unit and thermostat After restoring the system with power supply, TSTAT ID NO COM will continue to be displayed on the thermostat within 2 minutes. The error code will be cleared automatically. · Replace control board or thermostat
UA-02	IDU/ODU Connection Unsupported Error	· Incorrect combination of IDU and ODU	· Check the combination of IDU and ODU
UA-03	Brand Mismatch Error	· The IDU and ODU brands don't match	· Check the combination of IDU and ODU
U4-00	IDU/ODU Transmission Error	· Incorrect wiring between IDU and ODU	· Check wiring or tighten wiring connections if needed.
C4-02	Liquid Thermistor Error (Short)	· Short circuit of the thermistor or pressure sensor · Thermistor reading incorrect or values outside of normal range	· Check the connection to the thermistor (PCB and junction connector) · Check the resistance value of the thermistor (refer service manual) · Replace thermistor · Replace the control board
C4-03	Liquid Thermistor Error (Open)	· Open circuit of the thermistor or pressure sensor · Thermistor reading incorrect or values outside of normal range	· Check the connection to the thermistor (PCB and junction connector) · Check the resistance value of the thermistor (refer service manual) · Replace thermistor · Replace the control board
C5-02	Coil Thermistor/Pressure Sensor Error (Short)	· Short circuit of the thermistor or pressure sensor · Thermistor reading incorrect or values outside of normal range	· Check the connection to the thermistor (PCB and junction connector) · Check the resistance value of the thermistor (refer service manual) · Replace thermistor · Replace the control board
C5-03	Coil Thermistor/Pressure Sensor Error (Open)	· Open circuit of the thermistor or pressure sensor · Thermistor reading incorrect or values outside of normal range	· Check the connection to the thermistor (PCB and junction connector) · Check the resistance value of the thermistor (refer service manual) · Replace thermistor · Replace the control board

TROUBLESHOOTING

Error Code	Description	Possible Causes	Corrective Actions
A6-21	Inadequate Airflow	· Fan/motor obstruction or blocked filters · Restrictive ductwork or ductwork undersized · Wiring disconnected · Wrong outdoor/indoor combination · ID motor failure	· Check for obstruction on the fan/motor · Check ductwork/filter for blockage, clean filters · Remove obstruction. Verify all registers are fully open · Check the connections and the rotation of the motor · Verify the input voltage at the motor · Verify ductwork is appropriately sized for system. Resize/replace ductwork if needed · Replace motor
A6-20	Fan Motor Status Error	· Fan/motor obstruction or blocked filters · Power interruption (low voltage) · Incorrect wiring · Blockage in the airflow (ductwork) or ductwork undersized	· Check for obstruction on the fan/motor/ductwork, clean filters · Verify the input voltage at the motor · Check wiring · Replace motor
E-8	Input Overcurrent Protection	· Outdoor temperature is out of operation range · Compressor failure., power module or outdoor unit PCB · Short circuit in system · Excessive ducting static · Too many CMXV Air Handlers connected to outdoor power	· Check for obstructions to airflow to compressor at the outdoor unit, move unit in to the shade · Replace failed parts · Check for continuity and damage to the electronics due to a short circuit · Check for obstruction on the fan/motor/ductwork, clean filters · Follow instructions in section 12.4.1 and re-wire one of the CMXVs with indoor supplied power

DIAGNOSTIC CODES

Error Code	Detail Code	Details
A0	17	Refrigerant Leak Error (Confirmed)
CH	14	A2L Sensor Communication Error
CH	11	A2L Sensor Internal Error
A0	19	Refrigerant Leak Error (Monitoring)
A0	1	AUX Alarm Error
A1	0	EEPROM Error
AJ	0	Capacity Setting Error
C1	7	Blower Motor Communication Error
C6	1	Blower Motor ID and HP Mismatch Error
A8	0	Blower Motor Voltage Error
C6	2	Incomplete Parameters Sent to Motor
A6	0	Blower Motor Not Running
U5	0	Remote Controller Communication Error
UA	2	IDU/ODU Connection Unsupported Error
UA	3	Brand Mismatch Error
U4	0	IDU/ODU Transmission Error
C4	2	Liquid Thermistor Error (Short)
C4	3	Liquid Thermistor Error (Open)
C5	2	Coil Thermistor/Pressure Sensor Error (Short)
C5	3	Coil Thermistor/Pressure Sensor Error (Open)
A6	21	Inadequate Airflow
A6	20	Fan Motor Status Error

PCB LED STATE

LED	Component Description	Approximate location	Color	State			Description
				Blinking	Solid ON	OFF	
LED 1	CPU MONITOR (HAP)	Near microcontroller, lower left quadrant of PCB.	Green	X			Only one blinking pattern available. This means the ID PCB is operating properly.
						X	PCB is defective or not powered.
LED 2	COMN STATUS (H2P)	Near microcontroller, lower left quadrant of PCB.	Red		X		Communication between the ID and OD units has not been established.
						X	Communication has been established between the ID and OD units.
LED 3	H3P	Near button, lower right quadrant of PCB.	Green	X			Communication has been established between the ID unit and Thermostat.
						X	The thermostat is not connected or has failed to establish communication with the ID unit.

Each LED operates independently from each other.
When the PCB enters “Test Mode,” LED1 and LED2 will be OFF, and LED3 will switch ON.

WIRING DIAGRAM

NOTE: THESE INSTRUCTIONS ARE SPECIFICALLY FOR CMXV* MODELS. DO NOT ATTEMPT TO APPLY THESE DIAGRAMS FOR ANY OTHER MODELS.

WARNING

HIGH VOLTAGE! DISCONNECT ALL POWER BEFORE SERVICING. MULTIPLE POWER SOURCES MAY BE PRESENT. FAILURE TO DO SO MAY CAUSE PROPERTY DAMAGE, PERSONAL INJURY OR DEATH.

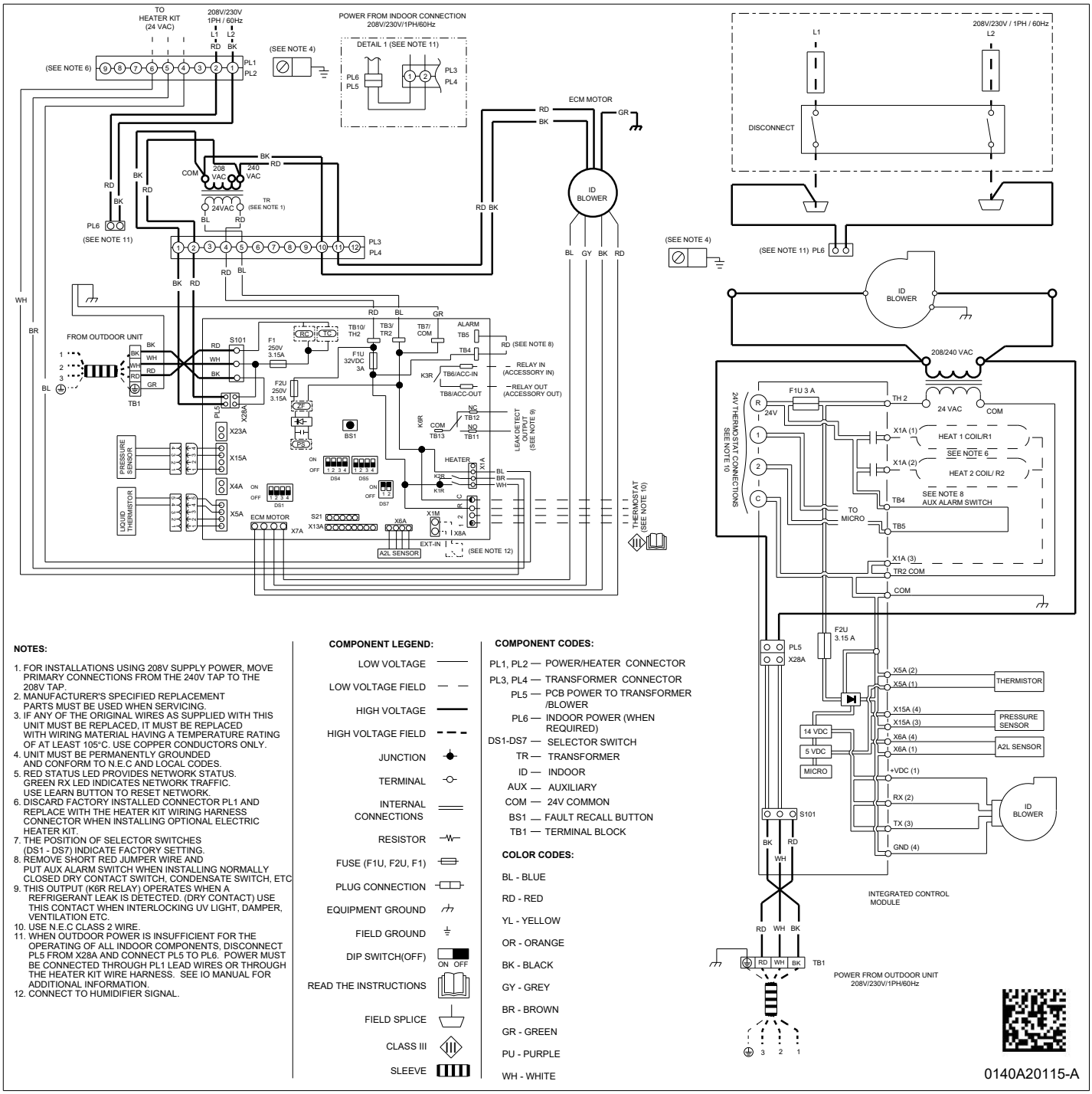

NOTES:

1. FOR INSTALLATIONS USING 208V SUPPLY POWER, MOVE PRIMARY CONNECTIONS FROM THE 240V TAP TO THE 208V TAP.
2. MANUFACTURER'S SPECIFIED REPLACEMENT PARTS MUST BE USED WHEN SERVICING.
3. IF ANY OF THE ORIGINAL WIRES AS SUPPLIED WITH THIS UNIT MUST BE REPLACED, IT MUST BE REPLACED WITH WIRING MATERIAL HAVING A TEMPERATURE RATING OF AT LEAST 105°C. USE COPPER CONDUCTORS ONLY.
4. UNIT MUST BE PERMANENTLY GROUNDED AND CONFORM TO N.E.C AND LOCAL CODES.
5. RED STATUS LED PROVIDES NETWORK STATUS. GREEN RX LED INDICATES NETWORK TRAFFIC. USE LEARN BUTTON TO RESET NETWORK.
6. DISCARD FACTORY INSTALLED CONNECTOR PL1 AND REPLACE WITH THE HEATER KIT WIRING HARNESS CONNECTOR WHEN INSTALLING OPTIONAL ELECTRIC HEATER KIT.
7. THE POSITION OF SELECTOR SWITCHES (DS1 - DS7) INDICATE FACTORY SETTING.
8. REMOVE SHORT RED JUMPER WIRE AND PUT AUX ALARM SWITCH WHEN INSTALLING NORMALLY CLOSED DRY CONTACT SWITCH, CONDENSATE SWITCH, ETC
9. THIS OUTPUT (K6R RELAY) OPERATES WHEN A REFRIGERANT LEAK IS DETECTED. (DRY CONTACT) USE THIS CONTACT WHEN INTERLOCKING UV LIGHT, DAMPER, VENTILATION ETC..
10. USE N.E.C CLASS 2 WIRE.
11. WHEN OUTDOOR POWER IS INSUFFICIENT FOR THE OPERATING OF ALL INDOOR COMPONENTS, DISCONNECT PL5 FROM X28A AND CONNECT PL5 TO PL6. POWER MUST BE CONNECTED THROUGH PL1 LEAD WIRES OR THROUGH THE HEATER KIT WIRE HARNESS. SEE IO MANUAL FOR ADDITIONAL INFORMATION.
12. CONNECT TO HUMIDIFIER SIGNAL.

COMPONENT LEGEND:

- LOW VOLTAGE
- LOW VOLTAGE FIELD
- HIGH VOLTAGE
- HIGH VOLTAGE FIELD
- JUNCTION
- TERMINAL
- INTERNAL CONNECTIONS
- RESISTOR
- FUSE (F1U, F2U, F1)
- PLUG CONNECTION
- EQUIPMENT GROUND
- FIELD GROUND
- DIP SWITCH(OFF) (ON OFF)
- READ THE INSTRUCTIONS
- FIELD SPLICE
- CLASS III
- SLEEVE

COMPONENT CODES:

PL1, PL2 — POWER/HEATER CONNECTOR
PL3, PL4 — TRANSFORMER CONNECTOR
PL5 — PCB POWER TO TRANSFORMER /BLOWER
PL6 — INDOOR POWER (WHEN REQUIRED)
DS1-DS7 — SELECTOR SWITCH
TR — TRANSFORMER
ID — INDOOR
AUX — AUXILIARY
COM — 24V COMMON
BS1 — FAULT RECALL BUTTON
TB1 — TERMINAL BLOCK

COLOR CODES:

BL - BLUE
RD - RED
YL - YELLOW
OR - ORANGE
BK - BLACK
GY - GREY
BR - BROWN
GR - GREEN
PU - PURPLE
WH - WHITE

Wiring is subject to change. Always refer to the wiring diagram on the unit for the most up-to-date wiring.

CMXV AIR HANDLER

CMXV AIR HANDLER HOMEOWNER'S ROUTINE MAINTENANCE RECOMMENDATIONS

*We strongly recommend a bi-annual maintenance checkup be performed before the heating and cooling seasons begin by a **qualified servicer**.*

REPLACE OR CLEAN FILTER

IMPORTANT NOTE: Never operate unit without a filter installed as dust and lint will build up on internal parts resulting in loss of efficiency, equipment damage and possible fire.

An indoor air filter must be used with your comfort system. A properly maintained filter will keep the indoor coil of your comfort system clean. A dirty coil could cause poor operation and/or severe equipment damage.

Your air filter or filters could be located in your furnace, in a blower unit, or in "filter grilles" in your ceiling or walls. The installer of your air conditioner or heat pump can tell you where your filter(s) are, and how to clean or replace them.

Check your filter(s) at least once a month. When they are dirty, replace or clean as required. Disposable type filters should be replaced. Reusable type filters may be cleaned.

You may want to ask your dealer about high efficiency filters. High efficiency filters are available in both electronic and non-electronic types. These filters can do a better job of catching small airborne particles.

MOTORS

Indoor and outdoor fan motors are permanently lubricated and do not require additional oiling.

WARNING

HIGH VOLTAGE
Disconnect all power before servicing or installing this unit. Multiple power sources may be present. Failure to do so may cause property damage, personal injury or death.

ALUMINUM INDOOR COIL CLEANING (QUALIFIED SERVICER ONLY)

This unit is equipped with an aluminum tube evaporator coil. The safest way to clean the evaporator coil is to simply flush the coil with water. This cleaning practice remains as the recommended cleaning method for both copper tube and aluminum tube residential evaporator coils.

It has been determined that many coil cleaners and drain pan tablets contain corrosive chemicals that can be harmful to aluminum tube and fin evaporator coils. Even a one-time application of these corrosive chemicals can cause premature aluminum evaporator coil failure. Any cleaners that contain corrosive chemicals including, but not limited to, chlorine and hydroxides, should not be used.

An alternate cleaning method is to use one of the products listed in TP-109* to clean the coils. The cleaners listed are the only agents deemed safe and approved for use to clean round tube aluminum coils. TP-109 is also available on the web site in Partner Link > Service Toolkit.

NOTE: Ensure coils are rinsed well after use of any chemical cleaners.

BEFORE YOU CALL YOUR SERVICER

CAUTION

To avoid the risk of equipment damage or fire, install the same amperage breaker or fuse as you are replacing. If the circuit breaker or fuse should open again within thirty days, contact a qualified servicer to correct the problem.
If you repeatedly reset the breaker or replace the fuse without having the problem corrected, you run the risk of severe equipment damage.

- Check the thermostat to confirm that it is properly set.
- Wait 15 minutes. Some devices in the outdoor unit or in programmable thermostats will prevent compressor operation for awhile, and then reset automatically. Also, some power companies will install devices which shut off air conditioners for several minutes on hot days. If you wait several minutes, the unit may begin operation on its own.
- Check the electrical panel for tripped circuit breakers or open fuses. Reset the circuit breakers or replace fuses as necessary.
- Check the disconnect switch near the indoor unit.
- Check for obstructions on the outdoor unit . Confirm that it has not been covered on the sides or the top. Remove any obstruction that can be safely removed. If the unit is covered with dirt or debris, call a qualified servicer to clean it.
- Check for blockage of the indoor air inlets and outlets. Confirm that they are open and have not been blocked by objects (rugs, curtains or furniture).
- Check the filter. If it is dirty, clean or replace it.

- Listen for any unusual noise(s), other than normal operating noise, that might be coming from the outdoor unit. If you hear unusual noise(s) coming from the unit, call a qualified servicer.

UV COIL AND AIR PURIFIERS

Clean Comfort brand UV coil purifiers also can be purchased from distributor. Maximum UV lamp diameter to be used is 1.375” to reduce the possibility of air leak.

The power source must be installed external of the unit. Ensure that the wiring is routed though the access panel knockout with the grommet included. A magnetic door switch must be installed to avoid an accidental ultraviolet exposure during service. UV-C radiation hazard label must be placed on any door or access panel.

Refer to UV coil purifiers product specification and installation manual for additional details. see table 18 for model and kit assignment.

UV-C PART NUMBERS	
MODELS	LAMP
UC18S15-24	UCP-16013
UC18S15-24B	UCP-16012

Table 18

UVc light conversion kit is required to install with the UVc light, for installation refer to the UVC drain pan kit installation manual IO -7023. see table 19 for model and kit assignment.

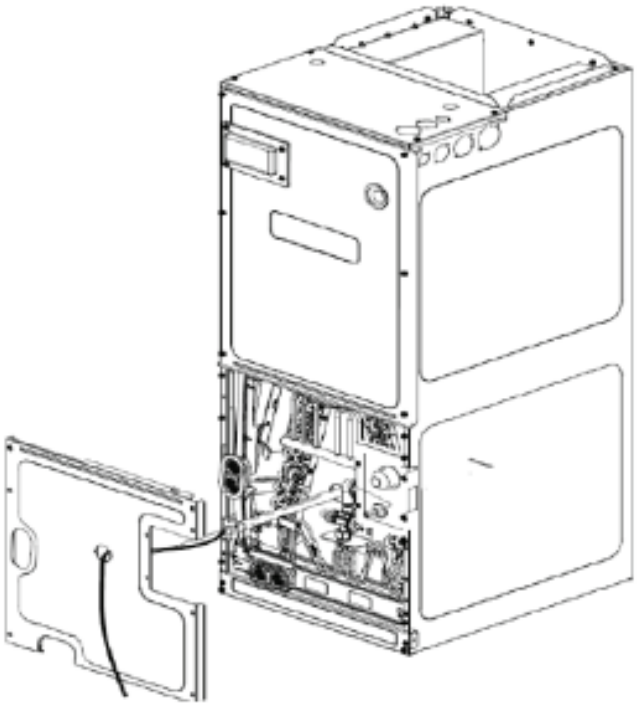

Figure 25

KIT #	DRIAN PAN MAIN SEQ	DRIAN PAN SIDE SEQ	DRIAN PAN EXT SEQ	CONDENSATE COLLECTOR, FRONT	CONDENSATE COLLECTOR, BACK	CONDENSATE COLLECTOR, MIDDLE
UVPK08	0010	0020	0050	0030	0040	NA

Table 19

START-UP CHECKLIST

CMXV Air Handler / Coil				
	Model Number	_____		
	Serial Number	_____		
ELECTRICAL				
Line Voltage (Measure L1 and L2 Voltage)	L1 - L2	_____		
Secondary Voltage (Measure Transformer Output Voltage)	R - C	_____		
Blower Amps		_____		
Heat Strip 1 - Amps		_____		
Heat Strip 2 - Amps		_____		
BLOWER EXTERNAL STATIC PRESSURE				
Return Air Static Pressure		_____	IN. W.C.	
Supply Air Static Pressure		_____	IN. W.C.	
Total External Static Pressure (Ignoring +/- from the reading above, add total here)		_____	IN. W.C.	
TEMPERATURES				
Return Air Temperature (Dry bulb / Wet bulb)		_____	DB °F	_____ WB °F
Cooling Supply Air Temperature (Dry bulb / Wet bulb)		_____	DB °F	_____ WB °F
Heating Supply Air Temperature		_____	DB °F	
Temperature Rise		_____	DB °F	
Delta T (Difference between Supply and Return Temperatures)		_____	DB	

Additional Checks	
Check wire routings for any rubbing	_____
Check product for proper draining	_____
Check screw tightness on blower wheel	_____
Check factory wiring and wire connections	_____
Check product for proper clearances as noted by installation instructions	_____

°F to °C formula: (°F - 32) divided by 1.8 = °C **°C to °F formula: (°C multiplied by 1.8) + 32 = °F**

THIS PAGE IS LEFT INTENTIONALLY BLANK.

CUSTOMER FEEDBACK
Daikin Comfort Technologies is very interested in all product comments.
Please fill out the feedback form on the following link:
https://daikincomfort.com/contact-us
You can also scan the QR code on the right to be directed to the feedback page.

Our continuing commitment to quality products may mean a change in specifications without notice.
© 2025 - 2026 Daikin Comfort Technologies Manufacturing, Inc.
19001 Kermier Rd., Waller, TX 77484
www.daikincomfort.com