DAIKIN

INSTALLATION MANUAL

VRV SYSTEM INVERTER AIR CONDITIONERS

MODELS
Air Handling Unit

English

Français

Español

FXTA09AAVJUA	**FXTA09AAVJUD**
FXTA12AAVJUA	**FXTA12AAVJUD**
FXTA18AAVJUA	**FXTA18AAVJUD**
FXTA24AAVJUA	**FXTA24AAVJUD**
FXTA30AAVJUA	**FXTA30AAVJUD**
FXTA36AAVJUA	**FXTA36AAVJUD**
FXTA42AAVJUA	**FXTA42AAVJUD**
FXTA48AAVJUA	**FXTA48AAVJUD**
FXTA54AAVJUA	**FXTA54AAVJUD**
FXTA60AAVJUA	**FXTA60AAVJUD**

Read these instructions carefully before installation. Keep this manual in a handy place for future reference. This manual should be left with the equipment owner.

Lire soigneusement ces instructions avant l'installation. Conserver ce manuel à portée de main pour référence ultérieure. Ce manuel doit être donné au propriétaire de l'équipement.

Lea cuidadosamente estas instrucciones antes de instalar. Guarde este manual en un lugar a mano para leer en caso de tener alguna duda. Este manual debe permanecer con el propietario del equipo.

WARNING

DO NOT BYPASS SAFETY DEVICES.

WARNING

THIS UNIT SHOULD BE INSTALLED IN A MANNER SO THAT IT IS NOT ACCESSIBLE TO THE PUBLIC.

NOTE: SPECIFICATIONS AND PERFORMANCE DATA LISTED HEREIN ARE SUBJECT TO CHANGE WITHOUT NOTICE. THIS EQUIPMENT IS ONLY APPROVED FOR USE WITH R-32 REFRIGERANT.

WARNING

ONLY PERSONNEL THAT HAVE BEEN TRAINED TO INSTALL, ADJUST, SERVICE, MAINTENANCE OR REPAIR (HEREINAFTER, "SERVICE") THE EQUIPMENT SPECIFIED IN THIS MANUAL SHOULD SERVICE THE EQUIPMENT.

THIS EQUIPMENT IS NOT INTENDED FOR USE BY PERSONS (INCLUDING CHILDREN) WITH REDUCED PHYSICAL, SENSORY OR MENTAL CAPACITIES, OR LACK OF EXPERIENCE AND KNOWLEDGE, UNLESS THEY HAVE BEEN GIVEN SUPERVISION OR INSTRUCTION CONCERNING USE OF THE APPLIANCE BY A PERSON RESPONSIBLE FOR THEIR SAFETY.

CHILDREN SHOULD BE SUPERVISED TO ENSURE THAT THEY DO NOT PLAY WITH THE EQUIPMENT.

THE MANUFACTURER WILL NOT BE RESPONSIBLE FOR ANY INJURY OR PROPERTY DAMAGE ARISING FROM IMPROPER SUPERVISION, SERVICE OR SERVICE PROCEDURES. IF YOU SERVICE THIS UNIT, YOU ASSUME RESPONSIBILITY FOR ANY INJURY OR PROPERTY DAMAGE WHICH MAY RESULT. IN ADDITION, IN JURISDICTIONS THAT REQUIRE ONE OR MORE LICENSES TO SERVICE THE EQUIPMENT SPECIFIED IN THIS MANUAL, ONLY LICENSED PERSONNEL SHOULD SERVICE THE EQUIPMENT. IMPROPER SUPERVISION, INSTALLATION, ADJUSTMENT, SERVICING, MAINTENANCE OR REPAIR OF THE EQUIPMENT SPECIFIED IN THIS MANUAL, OR ATTEMPTING TO INSTALL, ADJUST, SERVICE OR REPAIR THE EQUIPMENT SPECIFIED IN THIS MANUAL WITHOUT PROPER SUPERVISION OR TRAINING MAY RESULT IN PRODUCT DAMAGE, PROPERTY DAMAGE, PERSONAL INJURY OR DEATH.

Our continuing commitment to quality products may mean a change in specifications without notice.

© 2025 ***DAIKIN COMFORT TECHNOLOGIES MANUFACTURING, L.P.***
19001 Kermier Rd., Waller, TX 77484
www.daikincomfort.com

IOD-4057
01/2025

	service indicator; read technical manual
	operator's manual; operating instructions
	warning; low burning velocity material
	UN GHS flame symbol

Marking Symbol Table

TABLE OF CONTENTS

1. Safety Instructions....2
2. Before Installation....5
3. Installation Location....6
4. Refrigerant Piping Work....14
5. Drain Piping Work....17
6. Duct Work....18
7. Electrical Wiring Work....18
8. Field Setting....24
9. Accessories....28
10. Test Run....29

Air Handler Homeowner's Routine Maintenance Recommendations....32

Wiring Diagram....33

1. SAFETY INSTRUCTIONS

Read these "SAFETY INSTRUCTIONS for Installation" carefully before installing an air conditioner or heat pump. After completing the installation, make sure that the unit operates properly during the startup operation.

Instruct the customer on how to operate and maintain the unit. Inform customers that they should store this Installation Manual with the Operation Manual for future reference.

Always use a licensed installer or contractor to install this product. Improper installation can result in water or refrigerant leakage, electrical shock, fire, or explosion.

Rated performance is achieved after 20 hours of operation. Rated performance is delivered at the specified airflow. See product specification sheet for light commercial models. Specifications sheets can be found at www.daikincomfort.com for Daikin brand products. Within the website, please select the commercial products menu and then select the submenu for the type of product to be installed, such as air conditioners or heat pumps, to access a list of product pages that each contain links to that model's specification sheet.

Meanings of **DANGER, WARNING, CAUTION** and **NOTE** Symbols:

DANGER...Indicates an imminently hazardous situation which, if not avoided, will result in death or serious injury.

⚠**WARNING**...Indicates a potentially hazardous situation which, if not avoided, could result in death or serious injury.

⚠ **CAUTION**...Indicates a potentially hazardous situation which, if not avoided, may result in minor or moderate injury. It may also be used to alert against unsafe practices.

NOTE...Indicates situations that may result in equipment or property-damage accidents only.

DANGER: Refrigerant gas is heavier than air and replaces oxygen. A massive leak can lead to oxygen depletion, especially in basements, and an asphyxiation hazard could occur leading to serious injury or death.

DANGER: Do not ground units to water pipes, gas pipes, telephone wires, or lightning rods as incomplete grounding can cause a severe shock hazard resulting in severe injury or death. Additionally, grounding to gas pipes could cause a gas leak and potential explosion causing severe injury or death.

DANGER: If refrigerant gas leaks during installation, ventilate the area immediately. Refrigerant gas may produce toxic gas if it comes in contact with fire. Exposure to this gas could cause severe injury or death.

DANGER: After completing the installation work, check that the refrigerant gas does not leak throughout the system.
Do not install unit in an area where flammable materials are present due to risk of explosions that can cause serious injury or death.

DANGER: Safely dispose all packing and transportation materials in accordance with federal/state/local laws or ordinances. Packing materials such as nails and other metal or wood parts, including plastic packing materials used for transportation may cause injuries or death by suffocation.

⚠ WARNING

All phases of the field-installation, including, but not limited to, electrical, piping, safety, etc. must be in accordance with manufacturer's instructions and must comply with national, state, provincial and local codes.

WARNING

Only qualified personnel must carry out the installation work. Installation must be done in accordance with this installation manual. Improper installation may result in water leakage, electric shock, or fire.

WARNING

When installing the unit in a small room, take measures to keep the refrigerant concentration from exceeding allowable safety limits. Excessive refrigerant leaks, in the event of an accident in a closed ambient space, can lead to oxygen deficiency.

WARNING

Use only specified accessories and parts for installation work. Failure to use specified parts may result in water leakage, electric shocks, fire, or the unit failing.

WARNING

Install the air conditioner or heat pump on a foundation strong enough that it can withstand the weight of the unit. A foundation of insufficient strength may result in the unit falling and causing injuries.

WARNING

Take into account strong winds, typhoons, or earthquakes when installing. Improper installation may result in the unit falling and causing accidents.

WARNING

Make sure that a separate power supply circuit is provided for this unit and that all electrical work is carried out by qualified personnel according to local, state, and national regulations. An insufficient power supply capacity or improper electrical construction may lead to electric shocks or fire.

WARNING

Make sure that all wiring is secured, that specified wires are used, and that no external forces act on the terminal connections or wires. Improper connections or installation may result in fire.

WARNING

When wiring, position the wires so that the access panel can be securely fastened. Improper positioning of the access panel may result in electric shocks, fire, or the terminals overheating.

WARNING

Before touching electrical parts, turn off the unit.

WARNING

This equipment can be installed with a Ground-Fault Circuit Breaker (GFCI). Although this is a recognized measure for additional protection, with the grounding system in North America, a dedicated GFCI is not required.

WARNING

Securely fasten the outside unit terminal cover (panel). If the terminal cover/panel is not installed properly, dust or water may enter the outside unit causing fire or electric shock.

WARNING

When installing or relocating the system, keep the refrigerant circuit free from substances other than the specified refrigerant (R-32) such as air. Any presence of air or other foreign substance in the refrigerant circuit can cause an abnormal pressure rise or rupture, resulting in injury.

WARNING

Do not change the setting of the protection devices. If the pressure switch, thermal switch, or other protection device is shorted and operated forcibly, or parts other than those specified by Daikin are used, fire or explosion may occur.

WARNING

Do not use means to accelerate the defrosting process or to clean, other than those recommended by the manufacturer.

WARNING

Heat exchanger fins are sharp enough to cut. To avoid injury wear gloves or cover the fins when working around them.

WARNING

The appliance shall be stored in a room without continuously operating ignition sources (for example: open flames, an operating gas appliance or an operating electric heater). Do not pierce or burn. Be aware that refrigerants may not contain an odor.

WARNING

When installed in a room with an area less than that outlined in by the "General Safety Considerations" that is supplied along with the outdoor unit for finding out the minimum room area for conditioned space, that room shall be without continuously operating open flames (for example an operating gas appliance) or other potential ignition sources (for example an operating electric heater, hot surfaces).

WARNING

Auxiliary devices which may be a potential ignition source are not to be installed in the duct work. Such potential ignition sources include hot surfaces with a temperature exceeding 700°C and electric switching devices.

WARNING

Only auxiliary devices approved by the appliance manufacturer or declared suitable with the refrigerant shall be installed in connecting ductwork.

CAUTION

Do not touch the switch with wet fingers. Touching switch with wet fingers can cause electric shock.

CAUTION

The appliance incorporates a grounding connection for functional purposes only.

CAUTION

Do not allow children to play on or around the unit to prevent injury.

WARNING

A refrigerant leak detection system is installed. The unit must be powered on all times except for service.

CAUTION

Do not touch the refrigerant pipes during and immediately after operation as the refrigerant pipes may be hot or cold, depending on the condition of the refrigerant flowing through the refrigerant piping, compressor, and other refrigerant cycle parts. Your hands may suffer burns or frostbite if you touch the refrigerant pipes. To avoid injury, give the pipes time to return to normal temperature or, if you must touch them, be sure to wear proper gloves.

CAUTION

Install drain piping to proper drainage. Improper drain piping may result in water leakage and property damage.

CAUTION

Insulate piping to prevent condensation.

CAUTION

Be careful when transporting the product.

CAUTION

Do not use a charging cylinder. Using a charging cylinder may cause the refrigerant to deteriorate.

CAUTION

Refrigerant R-32 in the system must be kept clean, dry, and tight.

A. Clean and Dry — Foreign materials (including mineral oils such as SUNISO oil or moisture) should be prevented from getting into the system.
B. Tight — R-32 does not contain any chlorine, does not destroy the ozone layer, and does not reduce the earth's protection again harmful ultraviolet radiation. R-32 can contribute to the greenhouse effect if it is released. Therefore take proper measures to check for the tightness of the refrigerant piping installation. Read the chapter Refrigerant Piping and follow the procedures.

CAUTION

Indoor units are for indoor installation only. Outdoor units can be installed either outdoors or indoors. This unit is for indoor use.

CAUTION

Take adequate measures to prevent the outside unit from being used as a shelter by small animals. Small animals making contact with electrical parts can cause malfunctions, smoke, or fire. Instruct the customer to keep the area around the unit clean.

CAUTION

Do not install the air conditioner or heat pump in the following locations:

A. Where a mineral oil mist or oil spray or vapor is produced, for example, in a kitchen.
   Plastic parts may deteriorate and fall off or result in water leakage.
B. Where corrosive gas, such as sulfurous acid gas, is produced. Corroding copper pipes or soldered parts may result in refrigerant leakage.
C. Near machinery emitting electromagnetic waves. Electromagnetic waves may disturb the operation of the control system and cause the unit to malfunction.
D. Where flammable gas may leak, where there is carbon fiber, or ignitable dust suspension in the air, or where volatile flammables such as thinner or gasoline are handled. Operating the unit in such conditions can cause a fire.

NOTE: Install the power supply and control wires for the indoor and outdoor units at least 3.5 feet away from televisions or radios to prevent interference or noise. Depending on the radio waves, a distance of 3.5 feet may not be sufficient to eliminate the noise.

NOTE: Dismantling the unit, treatment of the refrigerant, oil and additional parts must be done in accordance with the relevant local, state, and national regulations.

NOTE: Do not use the following tools that are used with conventional refrigerants: gauge manifold, charge hose, gas leak detector, reverse flow check valve, refrigerant charge base, vacuum gauge, or refrigerant recovery equipment.

NOTE: For retrofit applications ensure that the existing refrigerant lines are the correct size and are free of leaks, acid and oil.

NOTE: This air conditioner or heat pump is an appliance that should not be accessible to the general public.

Minimum Room Area of the Total Conditioned Space
Please refer to the "General Safety Considerations" that is supplied along with the outdoor unit for finding out the minimum room area for conditioned space. For the installations other than the sea level, Altitude Adjustment Factor (AF) need to be considered as explained "General Safety Considerations" section and installer have to write down the A adj (adjusted room area) value and the maximum refrigerant charge on the indoor serial and rating plate using permanent marker.

NOTE: As maximum allowable pressure is 580 PSI (4.0MPa), the wall thickness of field-installed pipes should be selected in accordance with the relevant local, state, and national regulations.

2. BEFORE INSTALLATION

WARNING

Entrust installation to the place of purchase or a qualified serviceman. Improper installation could lead to leaks and, in worse cases, electric shock or fire.
Use of unspecified parts could lead to the unit failing, leaks and, in worse cases, electric shock or fire.

NOTE: Be sure to read this manual before installing the indoor unit.

NOTE: Be sure to mount an air filter (part to be procured in the field) in the suction air passage in order to prevent water leaking, etc.

NOTE: This unit is a partial unit air conditioner, complying with partial unit requirements of this international standard, and must be only connected to other units that have been confirmed as complying to corresponding partial unit requirements of this international standard.

The accessories needed for installation must be retained in your custody until the installation work is completed. Do not discard them.

1. Decide upon a line of transport.
2. Leave the unit inside its packaging while moving, until reaching the installation site. Where unpacking is unavoidable, use a sling of soft material or protective plates together with a rope when lifting, to avoid damage or scratches to the unit.

Be sure to check the type of R-32 refrigerant to be used before installing the unit.

(Using an incorrect refrigerant will prevent normal operation of the unit.)

For the installation of an outdoor unit, refer to the installation manual attached to the outdoor unit.

2.1 Precautions

- Be sure to instruct customers how to properly operate the unit (operating different functions, and adjusting the temperature) by having them carry out operations themselves while looking at the operation manual.
- Do not install in locations where the air contains high levels of salt such as that near the ocean and where voltage fluctuates greatly such as that in factories, or in vehicles or vessels.

FOR THE FOLLOWING ITEMS, TAKE SPECIAL CARE DURING CONSTRUCTION AND CHECK AFTER INSTALLATION IS FINISHED.

Items to be checked AFTER COMPLETION OF WORK

Items to be checked	If not properly done, what is likely to occur	Check
Are the indoor and outdoor units fixed firmly?	Units may drop, vibrate or make noise	
Is the refrigerant leak test finished?	It may result in insufficient cooling.	
Is the unit fully insulated?	Condensate may drip.	
Does the drainage flow smoothly?	Condensate may drip.	
Does the power supply voltage correspond to that shown on the name plate?	The unit may malfunction or the components burn out.	
Are the wiring and piping correct?	The unit may malfunction or the components burn out.	
Is the unit safely grounded?	Incomplete grounding may result in electric shocks.	
Is wiring size according to specifications?	The unit may malfunction or the components burn out.	
Is something blocking the air outlet or inlet of either the indoor or outdoor units?	It may result In insufficient cooling.	
Are the refrigerant piping length and additional refrigerant charge noted down?	The refrigerant charge in the system is not clear.	
Is the minimum room area write down on the indoor unit's serial plate?	It is unclear whether the product is installed in an appropriate space.	

Also review the SAFETY CONSIDERATIONS.

Items to be checked AT TIME OF DELIVERY

Items to be checked	Check
Did you hand the operation manual and warranty over to your customer?	
Did you explain about operations while showing the operation manual to your customer?	
Did you explain to your customer how to maintain and clean local procurements such as the air filter, suction grille, and air outlet grille?	
Did you hand manuals of local procurements (in case equipped) over to your customer?	

2.2 Selecting Installation Site

CAUTION

In cases where the unit is installed in a space where the humidity might exceed 86°F and RH80%, reinforce the insulation on the unit body.

CAUTION

Use glass wool or polyethylene foam as insulation so that the thickness is more than 2" and fits inside the installation space opening.

Select an installation site where the following conditions are fulfilled and meets with your customer's approval.

- Where optimum air distribution can be ensured.
- Where nothing blocks air passage.
- Where condensate can be properly drained.
- Where the supports are strong enough to bear the indoor unit weight.
- Where the false ceiling is not noticeably on an incline.
- Where piping between indoor and outdoor units is possible within the allowable limit. (Refer to the installation manual for the outdoor unit.)
- If a return-air duct is not installed, carefully select the place and method of product installation so that air flow into the product will not be blocked.
- The unit clearance from a combustible surface may be 0". However, service clearance must take precedence. A minimum of 24" in front of the unit for service clearance is required. Additional clearance on one side or top will be required for electrical wiring connections. Consult all appropriate regulatory codes prior to determining final clearances. When installing this unit in an area that may become wet (such as crawl spaces), elevate the unit with a sturdy, non-porous material. In installations that may lead to physical damage (i.e. a garage) it is advised to install a protective barrier to prevent such damage. Always install units such that a positive slope in condensate line (¼" per foot) is allowed.

2.3 Horizontal Applications

If installed above a finished living space, a secondary drain pan (as required by many building codes), must be installed under the entire unit and its condensate drain line must be routed to a location such that the user will see the condensate discharge.

3 INSTALLATION LOCATION

This product is designed and manufactured to comply with applicable national codes such as ASHRAE 15, ASHRAE 15.2, IAPMO Uniform Mechanical Code, ICC International Mechanical Code, or CSA B52. Installation in accordance with such codes and/or prevailing local codes/regulations is the responsibility of the installer. The manufacturer assumes no responsibility for equipment installed in violation of any codes or regulations.

The United States Environmental Protection Agency (EPA) has issued various regulations regarding the introduction and disposal of refrigerants. Failure to follow these regulations may harm the environment and can lead to the imposition of substantial fines. Should you have any questions please contact the local office of the EPA and/or refer to EPA's website www.epa.gov.

NOTE: These air handlers are designed for indoor installation only at a max altitude of 10,500 feet above sea level or a min altitude of -184 feet below sea level.

If the unit is located in an unconditioned area with high ambient temperature and/or high humidity, and/or total external static levels above 0.5 the air handler may be subject to nuisance sweating of the casing. On these installations, a wrap of 2" fiberglass insulation with a vapor barrier is recommended. Do not cover warning labels or serial plate. A secondary drain pan below the unit is also recommended to protect the installation site.

This product line may be installed in one of the upflow, downflow, horizontal left or horizontal right orientations as shown in Figures 7, 8, 9, and 10. The unit may be installed in upflow and horizontal left orientation as shipped (refer to specific sections for more information).

NOTE: Condensation may form on the product during COOL operation. It is recommended to install secondary drain pan (field supplied).

3.1 Upflow Installation (Figure 7)

No field modifications are mandatory however to obtain maximum efficiency, the horizontal drip shield, side drain pan and drain pan extension, can be removed.

Side Drain Pan and Extension Removal Instructions

Refer to Figure 2, remove the two (2) screws that secure the drip shield support brackets to the condensate collectors (front and back). Unsnap the side drain pan from the bottom drain pan using a screwdriver or any small lever. The side drain pan, drip shield brackets and the drain pan extension may now be removed. From Figure 2, drain port labeled (A) is the primary drain for this application and condensate drain line must be attached to this drain port.

Drain port (a) is for the secondary drain line (if used). When the side drain pan is removed, the drain port opening in the access panel must be covered by the accessory drain port plug (DPK1) as shown in Figures 1 and 2.

DRAIN PORT PLUG		
Kit Number	**Description**	**Application**
DPK1	Side Drain Port Plug	All Models

Drain Port Plug Kit

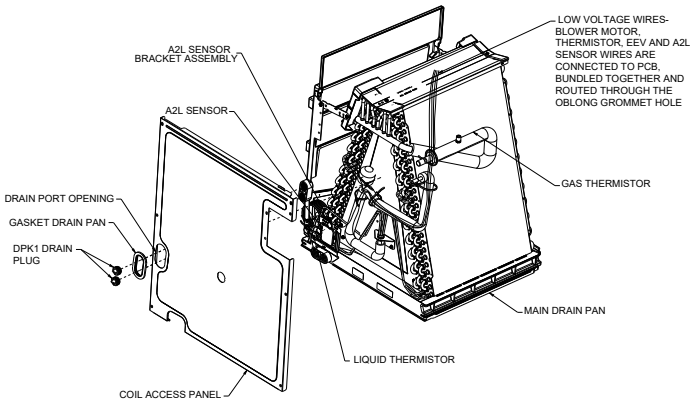

Drain Pan
Figure 1

NOTE: Refer to Spec-sheet for field installed accessory kit.

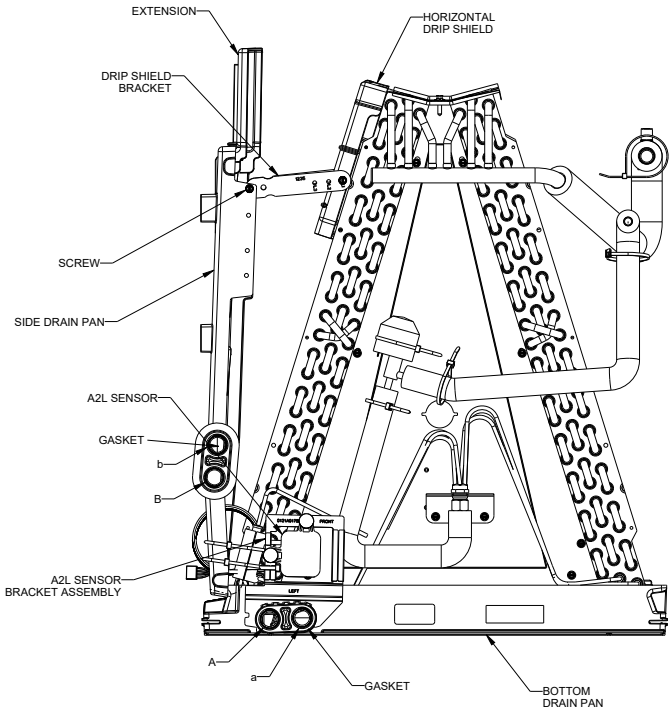

Side Drain Pan Removal
Figure 2

3.2 Horizontal Left Installation (Figure 9)

No field modifications are permissible for this application. Install unit as shown in Figure 9.

Drain port labeled (B) in Figure 2 is the primary drain for this application and condensate drain line must be attached to this drain port. Drain port (b) is for the secondary drain line (if used).

Remove red plugs from side drain pan before connecting condensate drain pipes. Use removed plug to close drain ports on vertical drain pan.

3.3 Downflow / Horizontal Right Installation (Figure 8, 10)

IMPORTANT NOTE: In the downflow application, to prevent coil pan "sweating", a downflow kit (DFK) is available through your local Daikin distributor. The DFK is not supplied with the air handler and is required to minimize pan sweating on all downflow installations. See Table 1 for the correct DFK and follow the instructions provided for installation.

1. Before inverting the air handler, remove blower access panel and coil access panel. The coil access panel and tubing panel may remain screwed together during this procedure. Remove and retain the seven (7) screws securing the coil access panel to the cabinet and the six (6) screws securing the blower access panel to the cabinet (See Figure 2A).

2. Before removing the coil, Cut Wire Tie 1, 2, and 3 shown in Figures 3 and 4 and disconnect sensor wires (Thermistor Wire Harness, A2L Sensor Wire Harness and EEV Wire Harness) from wire harnesses connectors connected to Printed circuit board as shown in Figure 6 and secure. Unbundled the wires by cutting Wire Tie.
3. Slide the coil assembly out from the cabinet. Use the drain pan to pull the assembly from the cabinet (See Figure 2B).

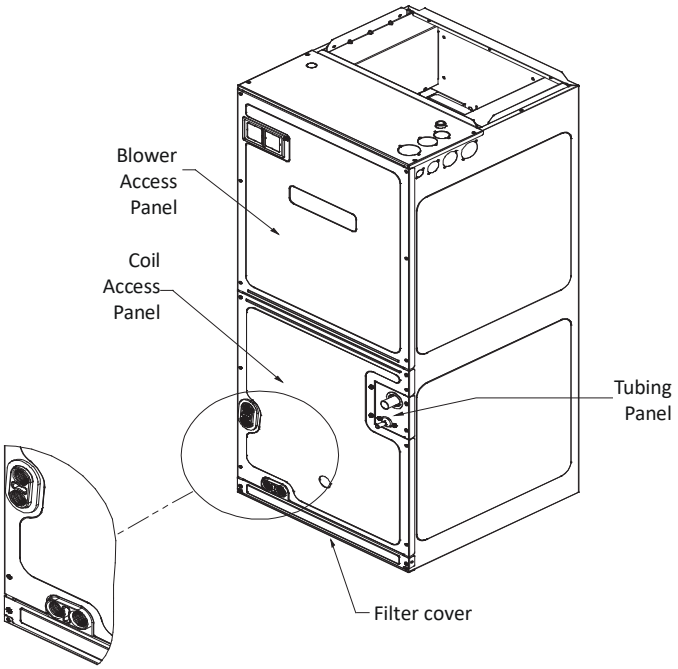

Figure 2A

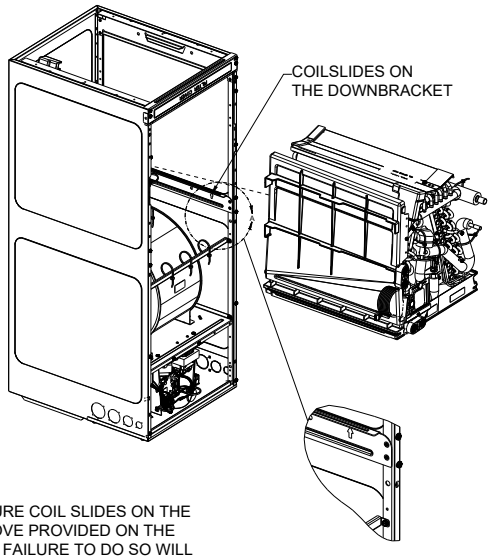

IMPORTANT NOTE: ENSURE COIL SLIDES ON THE RAILS ALONG THE GROOVE PROVIDED ON THE DRAIN PAN SIDE WALLS. FAILURE TO DO SO WILL RESULT IN IMPROPER CONDENSATE DRAINAGE.

Coil Installation for Downflow and Horizontal Right
Figure 2B

NOTE: Do not use manifolds, copper lines, or the flowrator to pull the coil assembly out. Failure to do so may result in braze joint damage and leaks.

4. Removal of the center support is required on units with 21” wide cabinet. Remove and retain the two (2) screws that secure the center support to the cabinet. Remove the center support (Figure 8,10).
5. Position the unit in the downflow position (Figure 2B).
6. Remove side drain pan extension if present (Figure 2).
7. Using the drain pan to hold the coil assembly, slide the coil assembly back into the cabinet on the downflow brackets as shown in Figure 2B.
8. Reinstall the center support (if removed) using the two (2) screws removed in Step 5 (Figure 8,10).
9. Reroute the wire harnesses shown in Figure 8 (Downflow) and Figure 10 (Horizontal Right), secure with Wire Ties as shown in Figure 4, connect sensor wires (Thermistor Wire Harness, A2L Sensor Wire Harness and EEV Wire Harness) with wire harnesses connectors connected to Printed circuit board as shown in Figure 6 and secure. Bundle wires after the installation with a Wire Tie according to the requirement of the wire lengths.
10. Reinstall the coil access panels and reinstall blower access panel removed in Step 1 as shown in Figure 2A.
11. Drain Connections for Horizontal Right Installation:
    a. Drain port labeled (B) in Figure 2 is the primary drain for this application and condensate drain line must be attached to this drain port. Drain port (b) is for the secondary drain line (if used).
    b. Remove red plugs from side drain pan before connecting condensate drain pipes. Use removed plug to close drain ports on vertical drain pan.

3.3.1 Instruction To Relocate A2L Sensor Bracket

Assembly From Downflow To Horizontal Right:

1. Take off the coil access panel (Figure 1).
2. Take off the drain port gaskets from Figure 2, drain port labeled (A) and (B) on main drain pan and side drain pan.
3. Take off the A2L sensor bracket assembly as shown in Figure 2.
4. Put A2L sensor bracket assembly to the side drain port correctly as shown in the Figure 10. The “FRONT 0121A*****” print on sensor bracket should be in the front.
5. Place gaskets back to the drain ports correctly. The “FRONT” print on the gaskets should be in the front. (See Figure 2).
6. Sensor wiring should be rerouted as shown in Figure 10.
7. Reassemble the blower access panel to the unit. (See Figure 2).

DFK-B Downflow Kit	DFK-C Downflow Kit	DFK-D Downflow Kit
FXTA09AAVJUA	FXTA42AAVJUA	FXTA54AAVJUA
FXTA09AAVJUD	FXTA42AAVJUD	FXTA54AAVJUD
FXTA12AAVJUA	FXTA48AAVJUA	FXTA60AAVJUA
FXTA12AAVJUD	FXTA48AAVJUD	FXTA60AAVJUD
FXTA18AAVJUA		
FXTA18AAVJUD		
FXTA24AAVJUA		
FXTA24AAVJUD		
FXTA30AAVJUA		
FXTA30AAVJUD		
FXTA36AAVJUA		
FXTA36AAVJUD		

Downflow Kit
Table 1

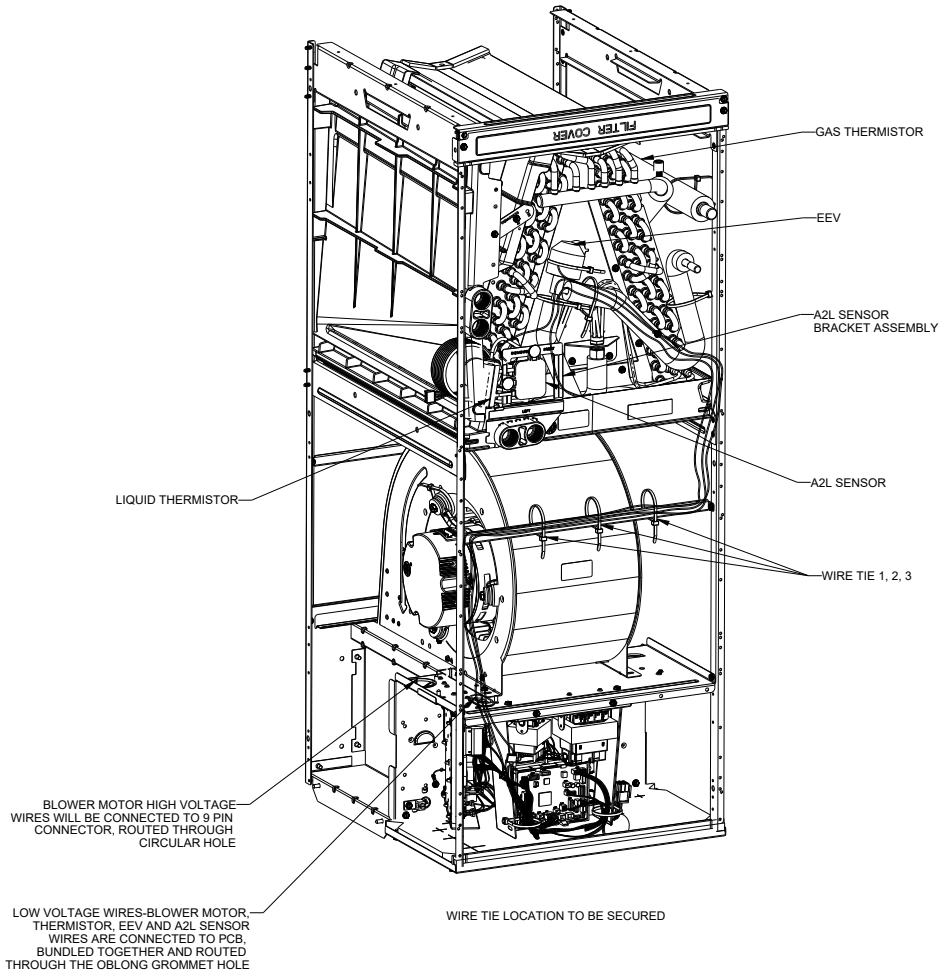

FIGURE 3

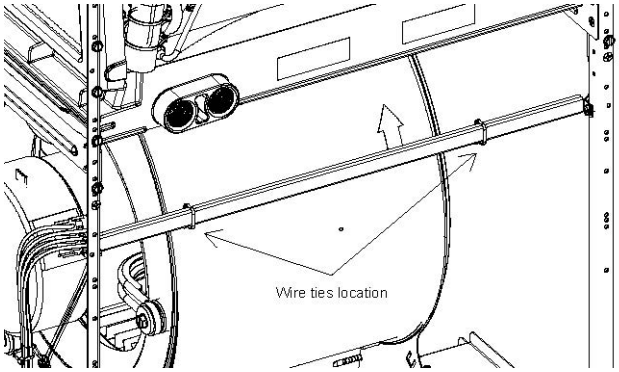

WIRE TIE LOCATION TO BE SECURED
FIGURE 4

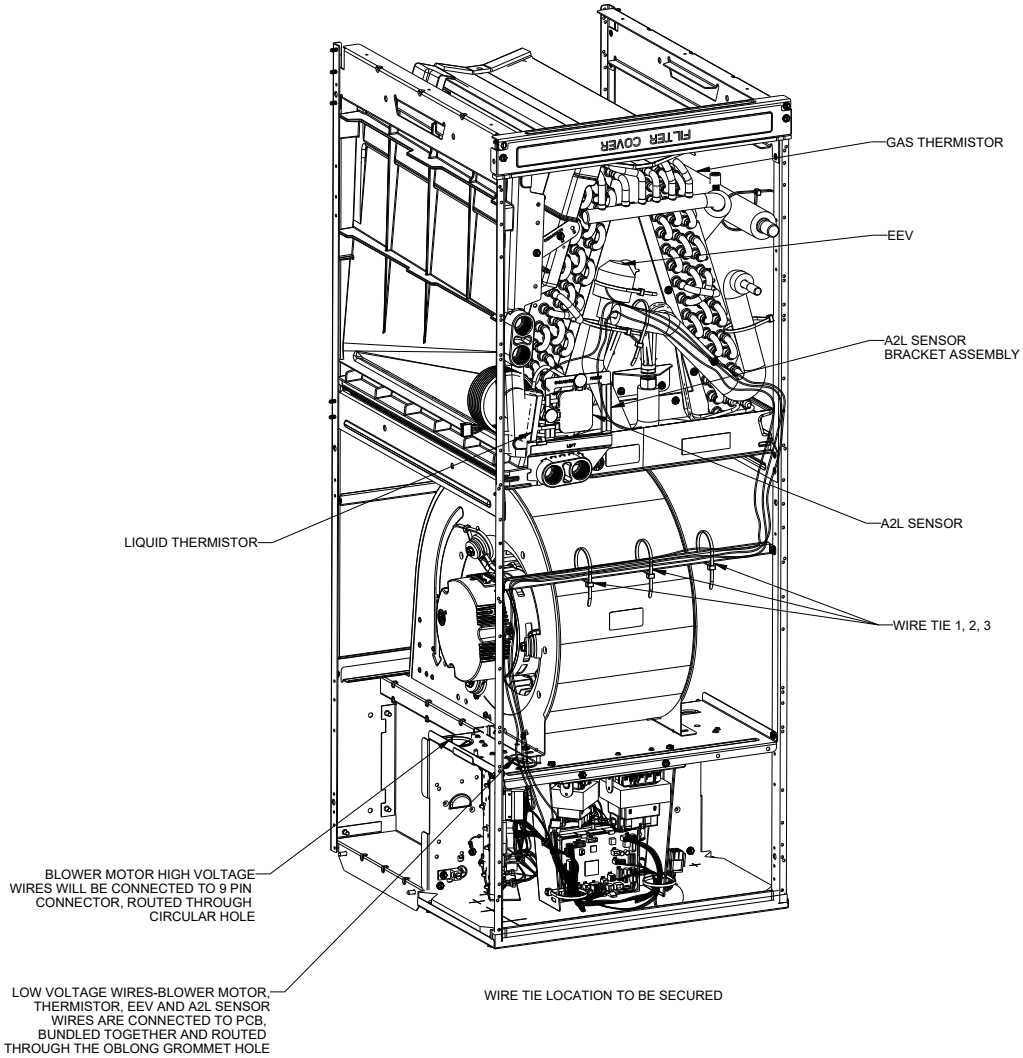

FIGURE 5

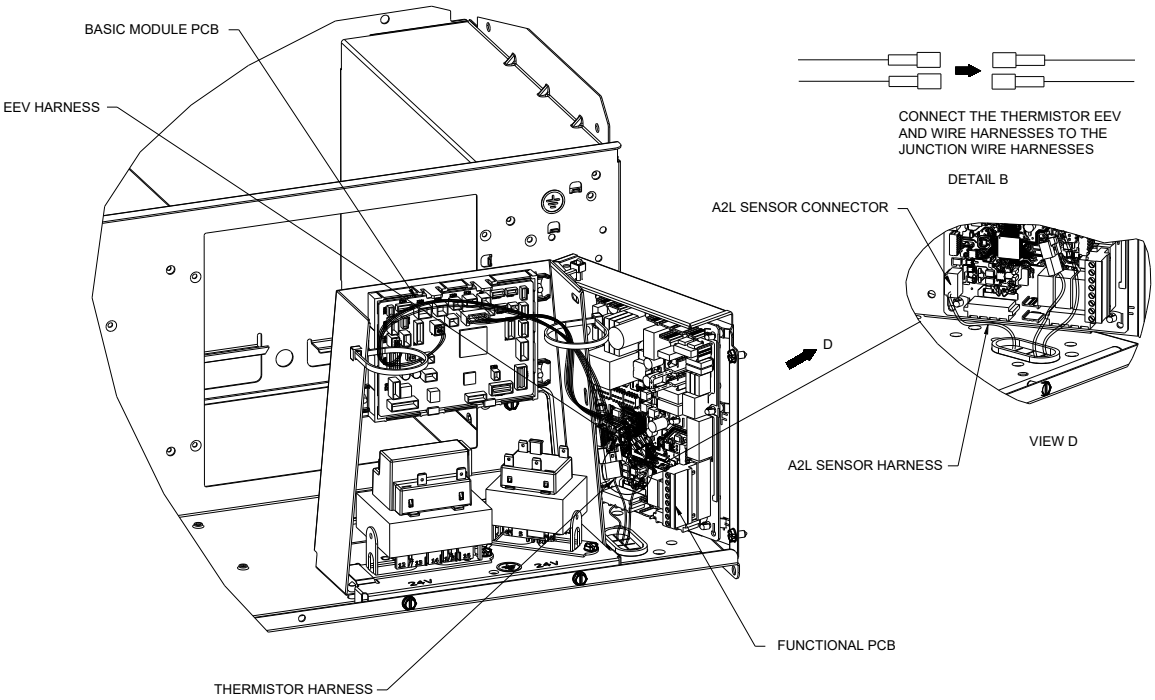

FIGURE 6

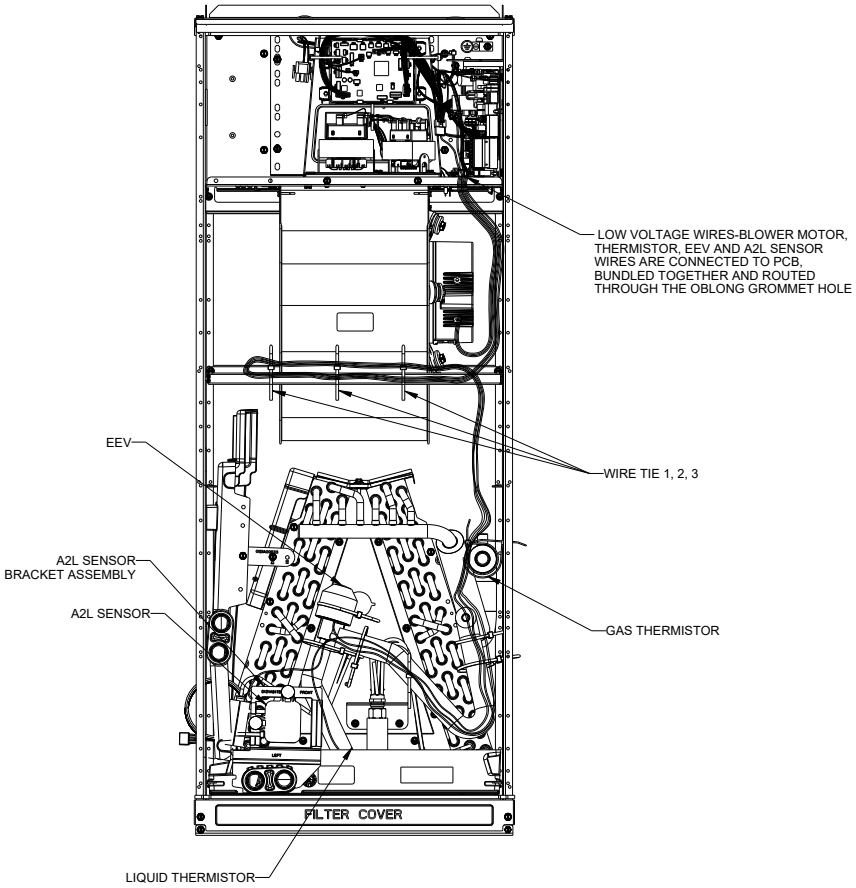

UPFLOW
FIGURE 7

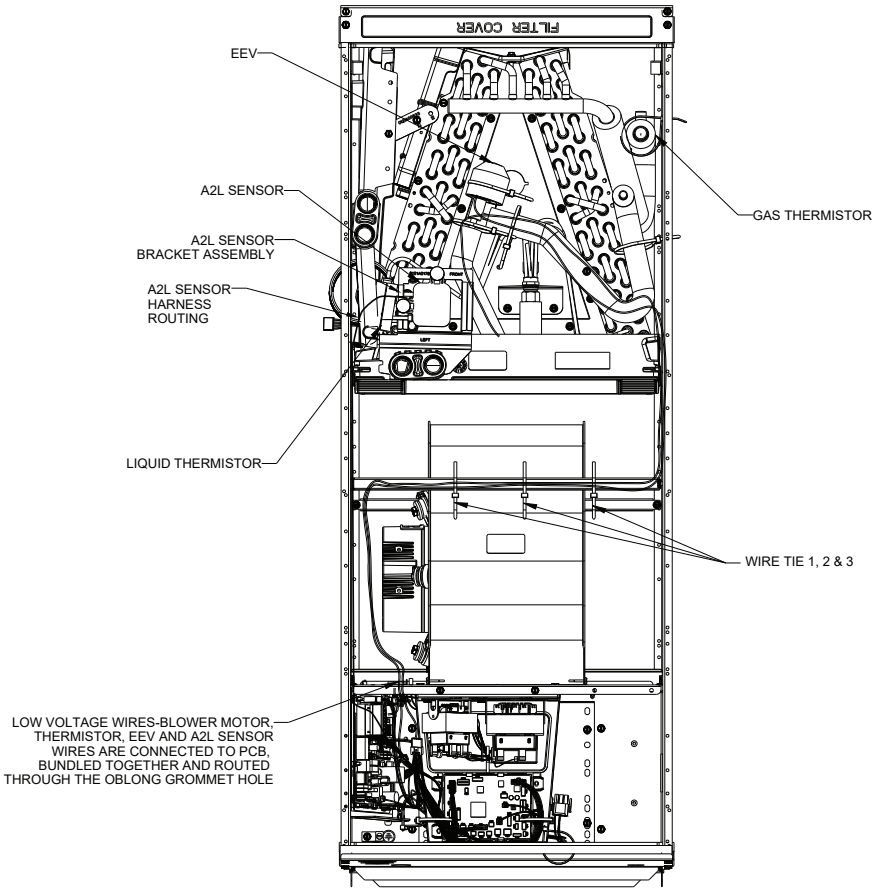

DOWNFLOW
FIGURE 8

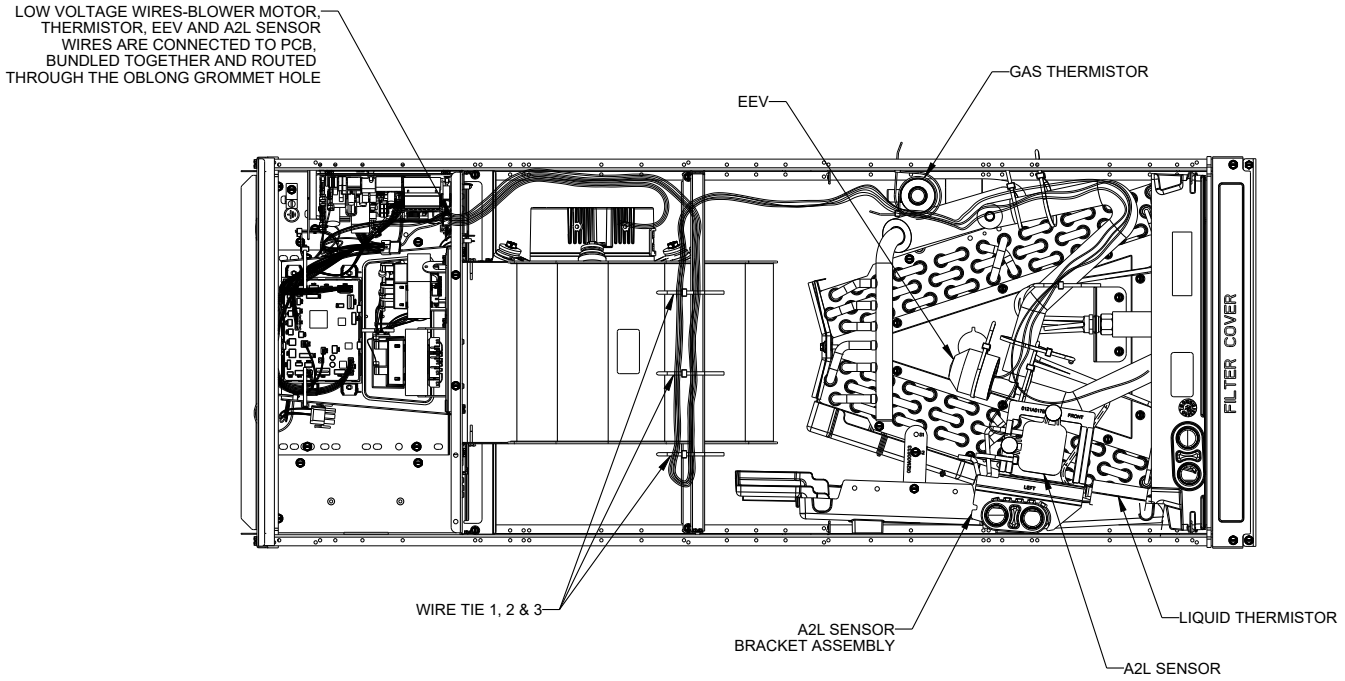

Horizontal Left
Figure 9

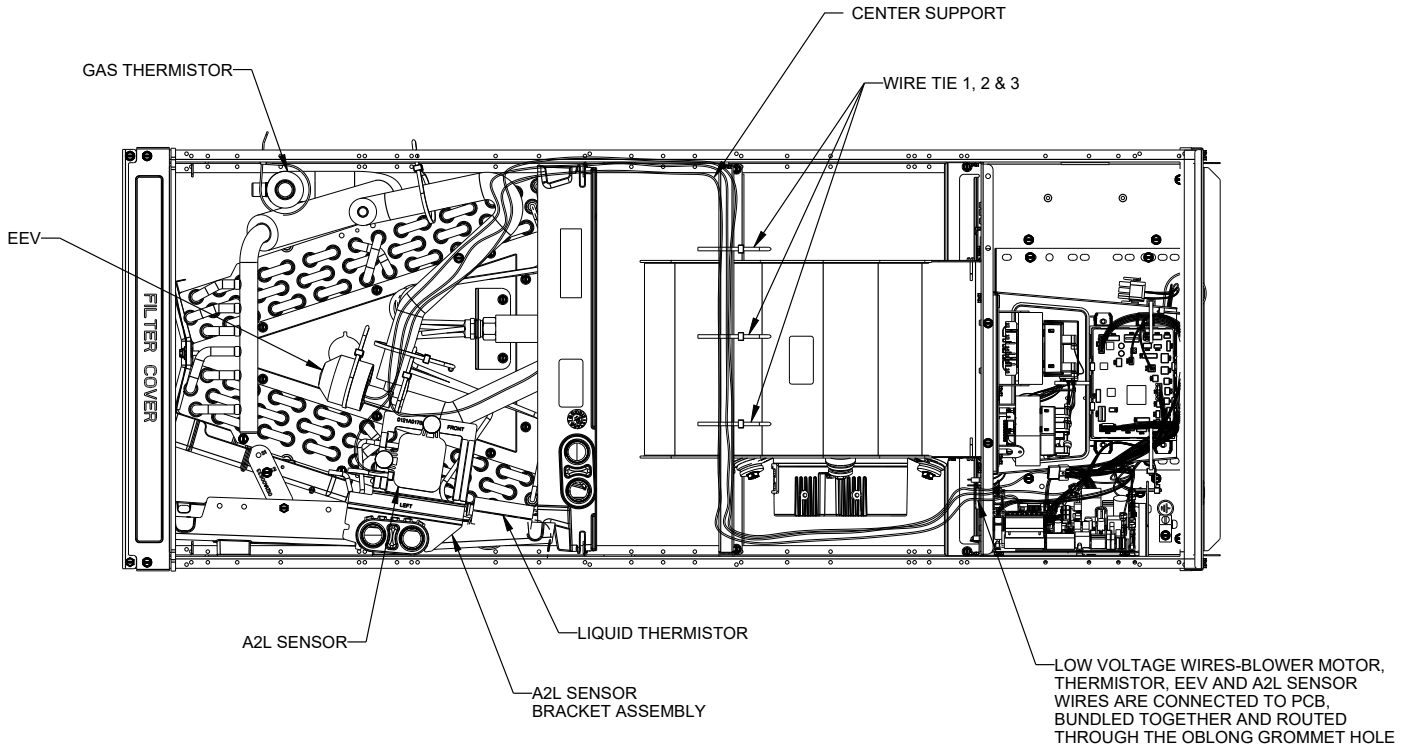

Horizontal Right
Figure 10

4. REFRIGERANT PIPING WORK

Refer to Figure 11A and 11B for the location of the components referenced in the following steps.

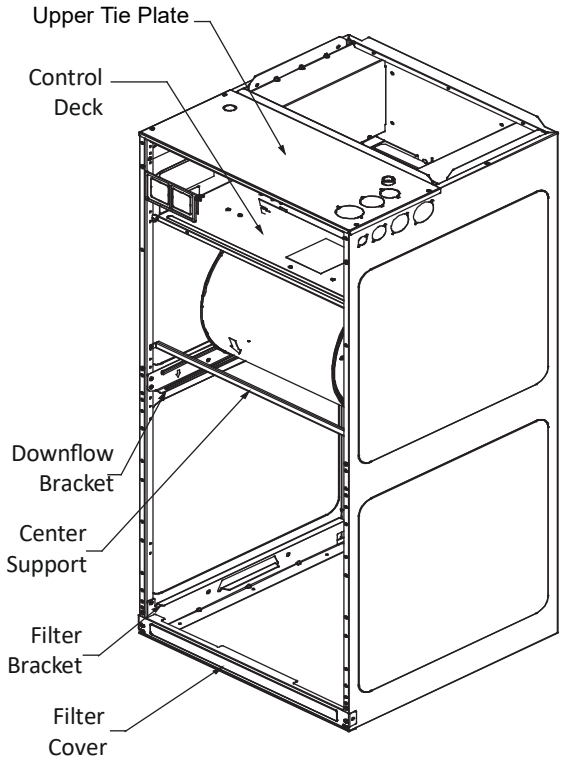

FIGURE 11A

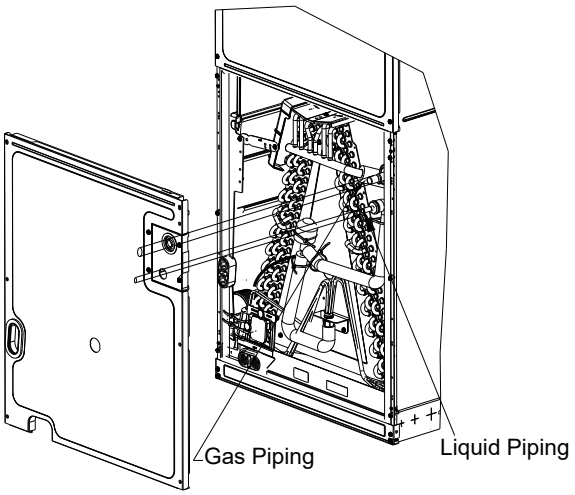

FIGURE 11B

NOTE: IF REMOVING ONLY THE COIL ACCESS PANEL FROM THE UNIT, THE FILTER COVER MUST BE REMOVED FIRST. FAILURE TO DO SO MAY RESULT IN PANEL DAMAGE.

Observe the requirements listed below for refrigerant tubing sizes.

Model	Tubing Size	
	Liquid	Gas
FXTA09/12/18	1/4”	1/2”
FXTA24/30/36/42/48/54/60	3/8”	5/8”

Execute heat insulation work completely on both sides of the gas piping and the liquid piping or else a water leakage might result.

Failing to insulate the pipes may cause leaking or burns. Be sure to use the insulation which can withstand such temperatures of 250°F (120°C) or more. Reinforce the insulation on the refrigerant piping according to the installation environment. If the temperature or humidity in the product installation location might reach 86°F or 80%, respectively. Condensation may form on the surface of the insulation.

CAUTION

FOLLOW THE POINTS BELOW:

- **USE A TUBE CUTTER AND FLARING BLOCK SUITABLE FOR THE TYPE OR REFRIGERANT.**
- **TO PREVENT DUST, MOISTURE OR OTHER FOREIGN MATTER FROM INFILTRATING THE PIPING, EITHER PINCH THE END OR COVER IT WITH TAPE.**
- **DO NOT ALLOW ANYTHING OTHER THAN THE DESIGNATED REFRIGERANT TO GET MIXED INTO THE REFRIGERANT CIRCUIT, SUCH AS AIR. IF ANY REFRIGERANT GAS LEAKS WHILE WORKING ON THE UNIT IMMEDIATELY VENTILATE THE ROOM.**

1. Cut off the spin closure.
   - The outdoor unit is charged with refrigerant.
   - This coil contains gas under 150 P.S.I.G.

Release pressure from the gas piping pressure-release device before initiating piping work. No pressure indicates possible leak.

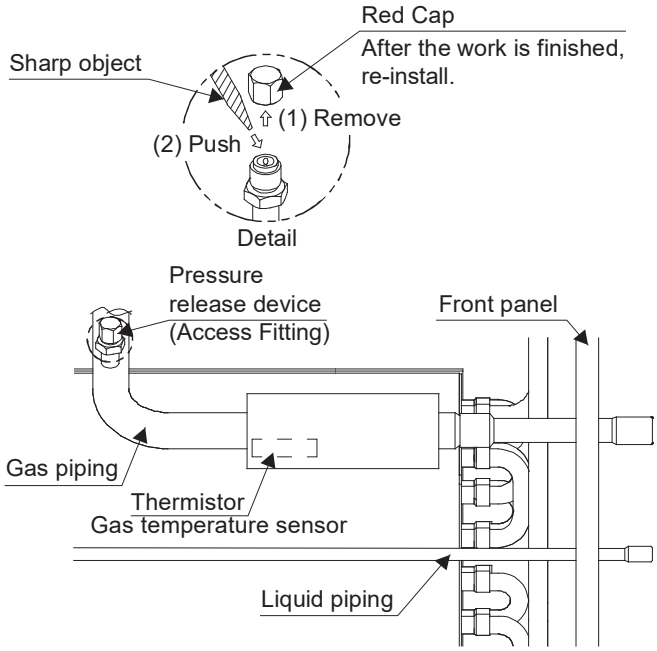

Figure 12

- Cut off the pipe end with a tube cutter (Both liquid line and gas line). All cut ends are to be round, burr free, and clean. Failure to follow this practice increases the chances for refrigerant leaks. The suction line is spun closed and requires tubing cutters to remove the closed end (See Figure 13).

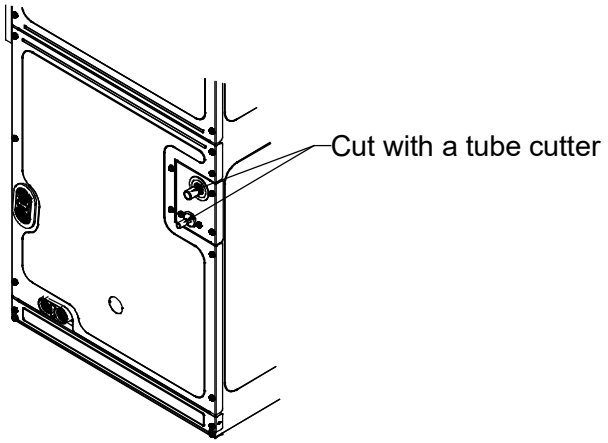

Figure 13

2. Connect the piping.
   - Remove the upper and lower front panels.
   - Slide the front panel (lower) along the field piping until it is far enough away that it will not be affected by heat from the brazing, as shown in Figure 14.
   - Braze up to the field piping fitting port while cooling the sensor and the thermal insulation.
   - Close the upper and lower front panels once heat from the brazed areas has dissipated.
   - Ensure to replace and hand tighten the red cap on access fitting.

NOTE: Braze joints should be made only with the connections provided external to the cabinet. Do not alter the cabinet nor braze inside the cabinet. To avoid overheating after brazing, quench all brazed joints with water or a wet rag.

NOTE: When brazing the field piping, cover the pipe insulation and the thermal sensor inside the insulation with a damp cloth to prevent any damage to the sensor or the insulation. Otherwise, the sensor may be damaged by heat of brazing, which leads to a failure of normal operation.

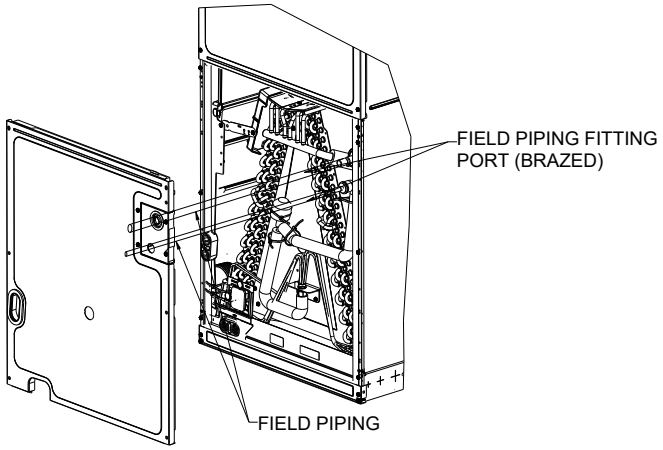

Figure 14

Installation of pipe-work must be kept to a minimum. Pipework including piping material, pipe routing and installation must be protected from physical damage and shall not be installed in an unventilated space. Equipment piping in any occupied space shall be installed in such a way to protect against accidental damage in operation and service. Precautions must be taken to avoid excessive vibration or pulsation to refrigeration piping. Protection devices, piping and fittings shall be protected as far as possible against adverse environmental effects, for example, the danger of water collecting and freezing in relief pipes or the accumulation of dirt and debris.

Follow standards related to ASHRAE 15, ASHRAE 15.2, IAPMO Uniform Mechanical Code, ICC International Mechanical Code or CSA B52 during any installation. Piping must be accessible for inspection prior to being covered or enclosed in compliance with national and local codes.

Flexible pipe elements must be protected against mechanical damage, excessive stress by torsion, or other forces. They should be checked for mechanical damage annually. The indoor equipment and pipes must be securely mounted and guarded such that accidental rupture of equipment cannot occur from such events as moving furniture or reconstruction activities. Field-made refrigerant joints indoors shall be tightness tested.

3. Field pipework must be pressure tested with an inert gas and then vacuum tested prior to refrigerant charging according to the following requirements: The minimum test pressure for the low side of the system

shall be the low side maximum allowable pressure and the minimum test pressure for the high side of the system shall be the high side maximum allowable pressure. If the high side of the system cannot be isolated from the low side of the system, the entire system shall be pressure tested to the low side maximum allowable pressure. Maximum Allowable Pressure is mentioned on the Serial Plate. No refrigerant shall be used for pressure testing (Refer Outdoor Unit Installation Manual for more details on pressure testing, evacuation and system start up).

4. Field-made refrigerant joints indoors shall be tightness tested. The test method shall have a sensitivity of 5 grams (0.176 oz) per year of refrigerant or better under a pressure of at least 0.25 times the maximum allowable pressure. No leak shall be detected (Should be leak tight) (For more information refer pressure test instruction in the outdoor unit's installation manual).
5. After checking for gas leaks, be sure to insulate the piping connections referring to Figure 15.

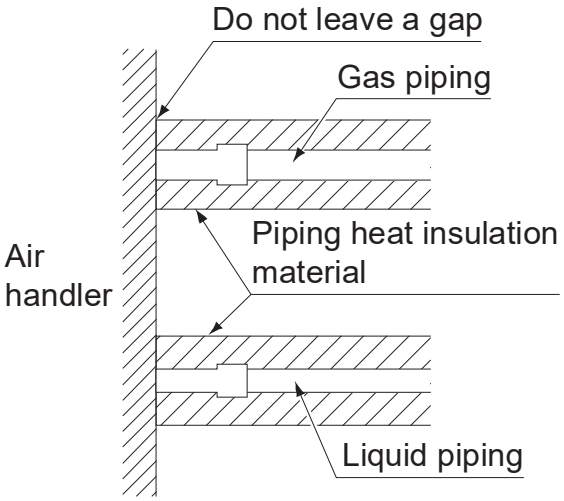

Figure 15

CAUTION

Be sure to insulate any field piping all the way to the piping connection inside the unit. Any exposed piping may cause condensation or burns if touched.

CAUTION

When brazing the refrigerant piping, perform nitrogen replacement first or perform the brazing while feeding nitrogen into the refrigerant piping. (Refer to Figure 16.)

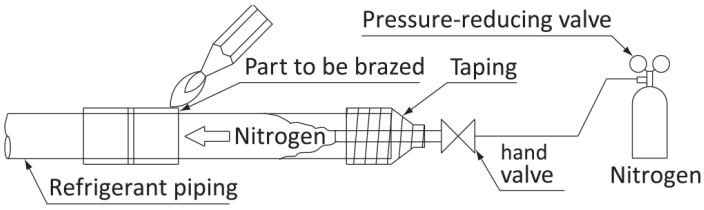

Figure 16

CAUTION

When brazing pipes while feeding nitrogen inside the piping, make sure to set the nitrogen pressure to 2.9 PSI or less using the pressure reducing valve.
(This pressure is such that a breeze is blown to your cheek.)

DANGER: Use of oxygen could result in an explosion resulting in serious injury or death. Only use dry nitrogen gas.

DANGER: Refrigerant gas may produce toxic gas if it comes in contact with fire such as from a heater, stove or cooking device.

CAUTION

The use of a heat shield is strongly recommended when brazing to avoid burning the serial plate or the finish of the unit. Heat trap or wet rags must be used to protect heat sensitive components such as service valves, electronic expansion valve (EEV), thermistors and A2L sensor.

DANGER: Exposure to this gas could cause severe injury or death.

NOTE: Do not use flux when brazing refrigerant piping. Therefore, use the phosphor copper brazing filler metal (BCuP) which does not require flux.

NOTE: Flux has an extremely negative effect on refrigerant piping systems. For instance, if chlorine based flux is used, it will cause piping corrosion. Flux containing fluorine will damage refrigerant oil.

4.1 Additional Refrigerant Charge (Applicable only for VRV-S configuration)

In addition to the refrigerant fill volume listed in the installation manual for the outdoor unit, additional refrigerant fill is required for the FXTA. Please add refrigerant according to the table below.

Additional Refrigerant charging amount according to the outdoor unit installation manual (lb)	+	[A] Additional refrigerant charging amount required for FXTA (lb)	=	Total additional refrigerant charging amount (lb)

Indoor Unit Type	[A] Additional refrigerant charging amount (lb)
FXTA09	0.04
FXTA12	0.46
FXTA18	0.46
FXTA24	0.08
FXTA30	0.34
FXTA36	0.34
FXTA42	0.89
FXTA48	0.89
FXTA54	1.25
FXTA60	1.25

5. DRAIN PIPING WORK

The coil drain pan has a primary and a secondary drain with 3/4" NPT female connections. The connectors required are 3/4" NPT male, either PVC or metal pipe, and should be hand tightened to a torque of no more than 37 in-lbs. to prevent damage to the drain pan connection. An insertion depth of approximately 3/8" to 1/2" (3-5 turns) should be expected at this torque.

1. Ensure drain pan hole is not obstructed.
2. To prevent potential sweating and dripping on to finished space, it may be necessary to insulate the condensate drain line located inside the building. Use Armaflex® or similar material.

Drain port labeled (B) in Figure 2 is the primary drain for this application and condensate drain line must be attached to this drain port. Drain port (b) is for the secondary drain line (if used). In applications where the air handler is installed in the horizontal left position, and the return air environment see humidity levels above 65% relative humidity coupled with total external static levels above 0.5" e.s.p., installation may require a field fabricated or field supplied secondary drain pan under the coil cabinet enclosure.

A secondary condensate drain connection has been provided for areas where the building codes require it. Pitch all drain lines a minimum of 1/4" per foot to provide free drainage, or as required by local code. Provide required support to the drain line to prevent bowing. If the secondary drain line is required, run the line separately from the primary drain and end it where condensate discharge can be easily seen.

NOTE: Water coming from secondary line means the coil primary drain is plugged and needs immediate attention.

NOTE: Insulate drain lines located inside the building or above a finished living space to prevent sweating. Install a condensate trap to ensure proper drainage.

NOTE: Some installation may require a field fabricated or field supplied secondary drain pan under the coil cabinet enclosure. The installation must include a "P" style trap that is located as close as is practical to the evaporator coil See Figure 17 for details of a typical condensate line "P" trap.

NOTE: Trapped lines are required by many local codes. In the absence of any prevailing local codes, please refer to the requirements listed in the uniform mechanical building code. A drain trap in a draw-through application prevents air from being drawn back through the drain line during fan operation thus preventing condensate from draining, and if connected to a sewer line to prevent sewer gases from being drawn into the airstream during blower operation.

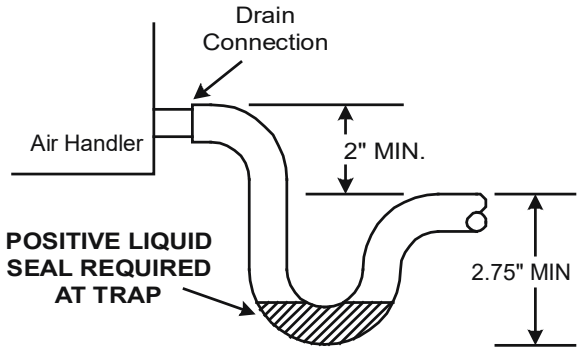

Figure 17

Observe the following guidelines when installing concentrated drain piping. Select the thickness of the concentrated drain piping to reflect the capacity of the machine to which it will be connected. (Install a drain trap for each indoor unit.) See Figure 18.

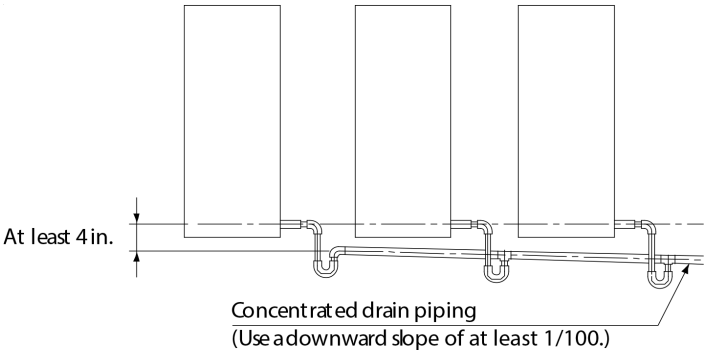

Figure 18

CAUTION

If secondary drain is not installed, the secondary access must be plugged.

Condensate drain traps with an open vertical Tee between the air handler and the condensate drain trap can improve

condensate drainage in some applications, but may cause excessive air discharge out of the open Tee. Daikin does not prohibit this type of drain but we also do not recommend it due to the resulting air leakage. Regardless of the condensate drain design used, it is the installer's responsibility to ensure the condensate drain system is of sufficient design to ensure proper condensate removal from the coil drain pan. Use of a condensate removal pump is permitted when necessary. This condensate pump should have provisions for shutting off the control voltage should a blocked drain occur. See Auxiliary Alarm Switch section for more details. A trap must be installed between the unit and the condensate pump.

Drain piping connection

Do not connect drain piping directly to sewage pipes where ammonia odor may be present. Ammonia in the sewage pipes may enter the indoor unit body through the drain piping and corrode the heat exchanger.

NOTE: After piping work is finished, check drainage flows smoothly.

NOTE: Gradually insert approximately 1 quart of water into the drain pan to check drainage.

IMPORTANT NOTE: The evaporator coil is fabricated with oils that may dissolve styrofoam and certain types of plastics. Therefore, a removal pump or float switch must not contain any of these materials.

6. DUCT WORK

CAUTION

Do not operate this product without all the ductwork attached.

This air handler is designed for a complete supply and return ductwork system. To ensure correct system performance, the ductwork is to be sized to accommodate 350-450 CFM per ton of cooling with the static pressure not to exceed 0.9" in w.c. Refer to ACCA Manual D, Manual S and Manual RS for information on duct sizing and application. Flame retardant ductwork is to be used and sealed to the unit in a manner that will prevent leakage.

NOTE: A downflow application with electric heat must have an L-shaped sheet metal supply duct without any outlets or registers located directly below the heater

6.1 Return Ductwork

Do not locate the return ductwork in an area that can introduce toxic or objectionable fumes/odors into the ductwork. The return ductwork is to be connected to the air handler bottom (upflow configuration).

CAUTION

Construct wiring to external zoning dampers and/ or mechanical ventilation, if required to ensure that upon detection of a leak, the zoning dampers are driven fully open and additional mechanical ventilation is activated.
For appliances using R-32 REFRIGERANTS, connected via an air duct system to one or more rooms, the supply and return air shall be directly ducted to the space.

For mechanical ventilation the air extraction opening from the room shall be located equal or below the refrigerant release point. For floor mounted units, it shall be as low as practicable. The air extraction openings shall be located a sufficient distance from the air intake openings to prevent re-circulation to the space.

7. ELECTRICAL WIRING WORK

IMPORTANT: All routing of electrical wiring must be made through provided electrical knockouts. When removing the electrical knockouts, take care not to damage the Printed circuit board. Do not cut, puncture or alter the cabinet for electrical wiring.

IMPORTANT: Installation of Air Handler must follow any local codes/regulations. The manufacture recommends that when a heater kit is not installed, a field supplied disconnect switch or breaker should be installed in the electrical circuit that will allow power to be shut-off for service or maintenance.

7.1 General Instructions

- Shut off the power before doing any work.
- All field supplied parts and materials, electric works must conform to local codes.
- Use copper wire only.
- See also the "Wiring Diagram Label" located inside the unit's fan housing.
- For details on hooking up the remote controller, refer to the "Remote Controller Installation Manual".
- All wiring must be performed by an authorized electrician.
- This system consists of multiple indoor units. Mark each indoor unit as unit A, unit B . . . , and be sure the terminal board wiring to the outdoor unit and Branch Selector unit are properly matched. If wiring and piping between the outdoor unit and an indoor unit are mismatched, the system may cause a malfunction.
- Install a wiring interrupter or ground-fault circuit interrupter for the power wiring.
- To avoid short circuiting the power supply wire, be sure to use insulated terminals.
- Do not turn on the power supply (wiring interrupter or ground-fault circuit interrupter) until all other work is done.

DANGER: Do not ground units to water piping, telephone wires or lightning rods because incomplete grounding could cause a severe shock hazard resulting in severe injury or death, not to gas piping because a gas leak could result in an explosion which could lead to severe injury or death.

7.2 Wire Sizing

Wire size is important to the operation of your equipment. Use the following check list when selecting the appropriate wire size for your unit.

- Wire used must be sized to carry the Minimum Circuit Ampacity (MCA) listed on the equipment's Rating Plate.
- Refer to the NEC (USA) or CSA (Canada) for wire sizing. The unit MCA for the air handler and the optional electric heat kit can be found on the unit Serial and Rating Plate.
- Wire must be sized to allow no more than a 2% voltage drop from the building breaker/fuse panel to the unit.
- Wires with different insulation temperature rating have varying ampacities - be sure to check the temperature rating used.

Model	Power supply wiring		Remote controller wiring Transmission wiring	
	MOP	Size	Wiring	Size
FXTA09AAVJUA	15A	Wiring size and length must comply with local codes.	2-conductor, stranded nonshielded copper cable PVC/vinyl jacket (NOTE 2)	AWG18-16 (0.75-1.25 mm^2)
FXTA12AAVJUA				
FXTA18AAVJUA				
FXTA24AAVJUA				
FXTA30AAVJUA				
FXTA36AAVJUA				
FXTA42AAVJUA				
FXTA48AAVJUA				
FXTA54AAVJUA				
FXTA60AAVJUA				
FXTA09AAVJUD				
FXTA12AAVJUD				
FXTA18AAVJUD				
FXTA24AAVJUD				
FXTA30AAVJUD				
FXTA36AAVJUD				
FXTA42AAVJUD				
FXTA48AAVJUD				
FXTA54AAVJUD				
FXTA60AAVJUD				

The lengths of remote controller wiring and transmission wiring are as follows:

1. Remote controller wiring
   - Length between indoor unit and remote controller - Max. 1,640 ft. (500 m)
2. Transmission wiring
   - Total length Max. 6,560 ft. (2,000 m)"
   - Length between units Max. 656 ft. (200 m)
   - Farthest length*1 (10 systems*2 or less) Max. 3,280 ft. (1,000 m)
   - Farthest length*1 (more than 10 systems*2) Max. 2,296 ft. (700 m)

*1 Length from outdoor unit to farthest unit
*2 System : A set of units connected in the same refrigerant circuit.

NOTE: Vinyl cord with sheath or cable (Insulated thickness: 1/16 in. (1 mm) or more).

7.3 Safety Device

Every installation must include an NEC (USA) or CEC (Canada) approved overcurrent protection device. Also, check with local or state codes for any special regional requirements.

Protection can be in the form of fusing or HACR style circuit breakers. The Serial and Rating Plate provides the maximum overcurrent device permissible.

When using residual current operated circuit breakers, be sure to use a high-speed type (0.1 second or less) 30mA rated residual operating current.

NOTE: Fuses or circuit breakers are to be sized larger than the equipment MCA but not to exceed the MOP.

7.4 Electrical Connections

IMPORTANT NOTE: USE COPPER CONDUCTORS ONLY.

Knockouts are provided on the air handler top panel and sides of the cabinet to allow for the entry of the supply voltage conductors, as shown in Figure 19. If the knockouts on the cabinet sides are used for electrical conduit, an adapter ring must be used in order to meet UL 60335-2-40 safety requirements. An NEC or CEC approved strain relief is to be used at this entry point. Some codes/municipalities require the supply wire to be enclosed in conduit. Consult your local codes.

IMPORTANT: Installation of Air Handler must follow any local codes/regulations. The manufacture recommends that when a heater kit is not installed, a field supplied disconnect switch or breaker must be installed in the electrical circuit that will allow power to be shut-off for service or maintenance.

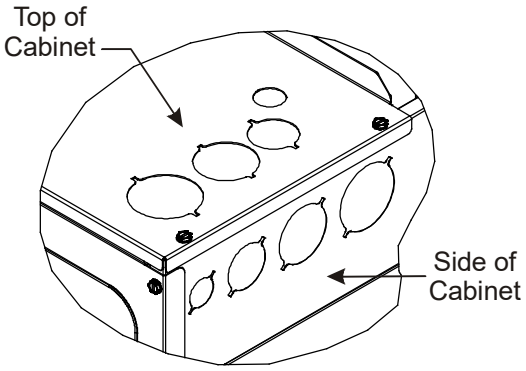

Figure 19

CAUTION

Outside the air conditioner, do not route the remote controller wiring and transmission wiring together with other electrical wiring. Keep the remote controller wiring and transmission wiring at least 2 in. (50mm) away from the power wiring and other electrical wiring. Effects of electrical interference (external noise) may result in malfunction and breakdown.
If the power supply voltage is 208V, change the transformer wire connection from the 240V terminal to the 208V terminal on both transformers (Refer the wiring diagram for connection points).

7.4.1 Air Handler Only (Non-Heat Kit Models)

The power supply connects to the stripped black and red wires contained in the air handler electrical compartment. Attach the supply wires to the air handler conductors as shown in the unit wiring diagram using appropriately sized solderless connectors or other NEC or CEC approved means. A ground lug is also provided in the electrical compartment. The ground wire from the power supply must be connected to this ground lug.

NOTE: AIR HANDLER WITH DISCONNECT SWITCH - Attach the supply wires to the disconnect switch terminals as shown in the unit wiring diagram using appropriately sized solderless connectors or other NEC or CEC approved means. A ground lug is also provided on the disconnect switch mount bracket (Figure 20) in the electrical compartment. The ground wire from the power supply must be connected to this ground lug.

7.4.2 Air Handler / Non-Circuit Breaker Heat Kits

A terminal block is provided with the HKTS kit to attach the power supply and air handler connections. Follow the HKTS Installation Manual and wiring diagram for complete wiring details.

NOTE: AIR HANDLER WITH DISCONNECT SWITCH - Do not use disconnect switch assembly inside the unit while installing Heat kit. Refer Figure 20 to know how to remove disconnect switch assembly from unit.

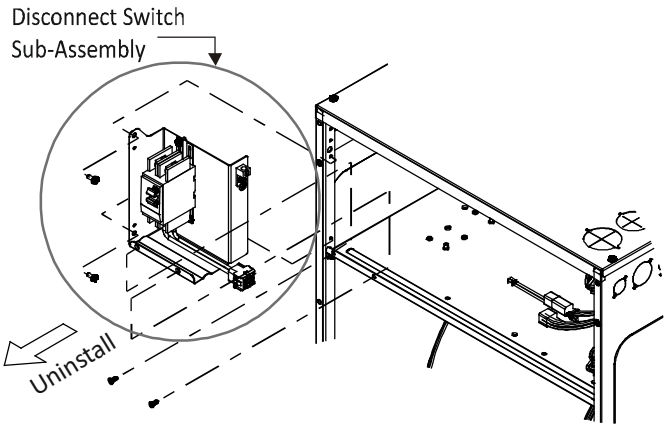

Figure 20

NOTE: TRANSFORMER SUB-ASSEMBLY –
Before installing the Heat Kit, uninstall the transformer and Printed circuit board sub-assembly (Figure 21). Make sure to unplug 12 pin connector before uninstalling the transformer and Printed circuit board sub-assembly. Also unplug the five wire harnesses as shown on Figure 22 from the Basic Module Printed circuit board, and Cut the wire tie to mounted onto the Transformer sheet metal bracket, to all.

Follow the Heat Kit Installation Manual to install the Heat Kit. Install transformer sub-assembly back to the unit (Figure 21), and connect all five wire harnesses onto Basic Module Printed circuit board, as well as attach wire tie (Figure 22 and wiring diagram). Plug in 12-Pin connectors and secure screws while installing transformer sub-assembly back to the unit after heater kit installation.

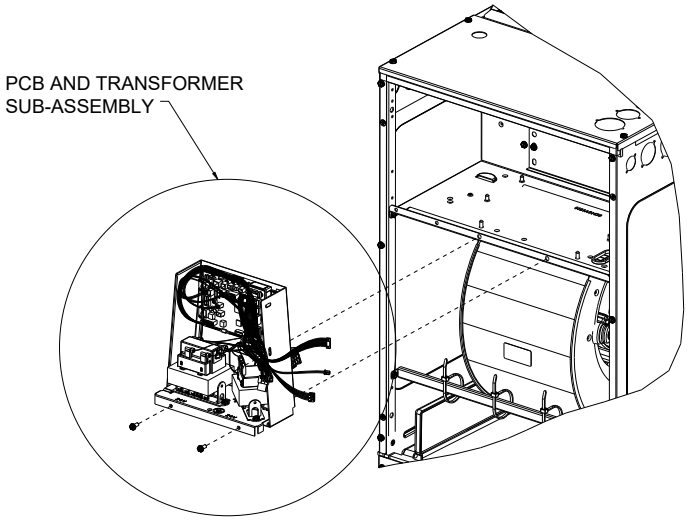

Figure 21

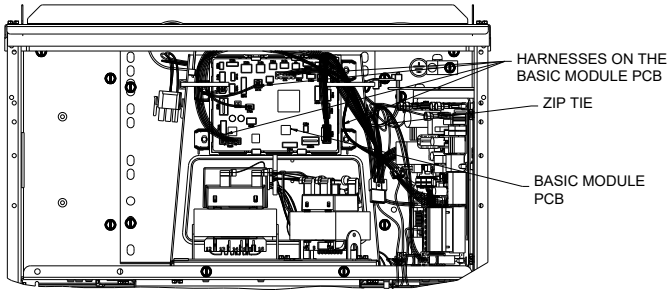

FIGURE 22

7.4.3 Air Handler with Circuit Breaker Heat Kit

The circuit breakers have lugs for power supply connection. See the HKTS Installation Instructions for further details.

WARNING

USE ONLY SPECIFIED WIRE AND CONNECT TO TERMINALS TIGHTLY. BE CAREFUL THAT WIRES DO NOT PLACE EXTERNAL STRESS ON TERMINALS. KEEP WIRE IN NEAT ORDER; NOT TO OBSTRUCT OTHER EQUIPMENT. MAKE SURE THAT THE ACCESS PANEL CLOSES TIGHTLY. INCOMPLETE CONNECTIONS COULD RESULT IN OVERHEATING, AND IN WORSE CASES, ELECTRIC SHOCK OR FIRE.

NOTE: NEVER CONNECT POWER SUPPLY WIRING TO THE TERMINAL BLOCK FOR REMOTE CONTROLLER WIRING AS THIS COULD DAMAGE THE ENTIRE SYSTEM.

WARNING

WHEN DOING THE WIRING, MAKE SURE THE WIRING IS NEAT AND DOES NOT CAUSE THE ACCESS PANEL TO STICK UP, AND THEN CLOSE THE COVER FIRMLY. WHEN ATTACHING THE ELECTRIC COMPONENT BOX COVER, MAKE SURE YOU DO NOT PINCH ANY WIRES.

PRECAUTIONS

- Refer to the “REMOTE CONTROLLER INSTALLATION MANUAL” on how to install and route the wiring for the remote controller.
- See also the “Wiring Diagram Label” located inside the unit’s fan housing.
- Connect the remote controller and transmission wiring to their respective terminal blocks.

WIRING EXAMPLE

NO. 1 SYSTEM:

When using 1 remote controller for 1 Indoor Unit.

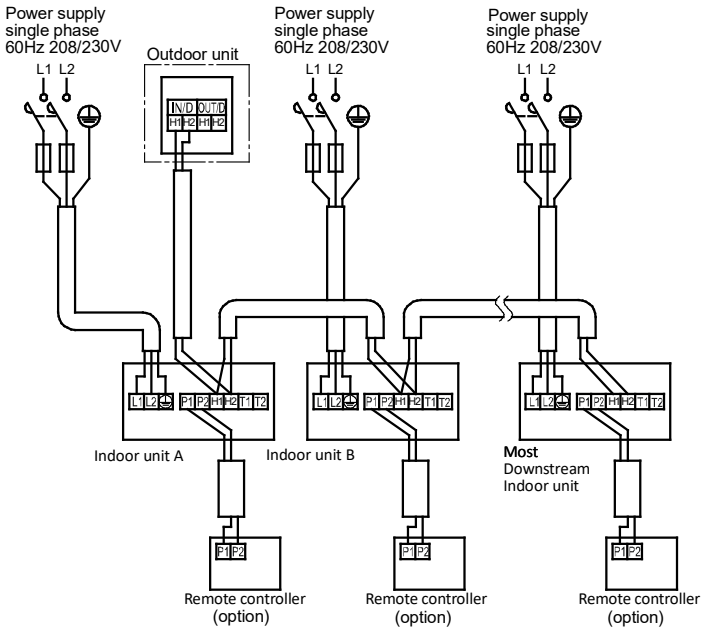

FIGURE 23

NO. 2 SYSTEM:

For group control or use with 2 remote controllers.

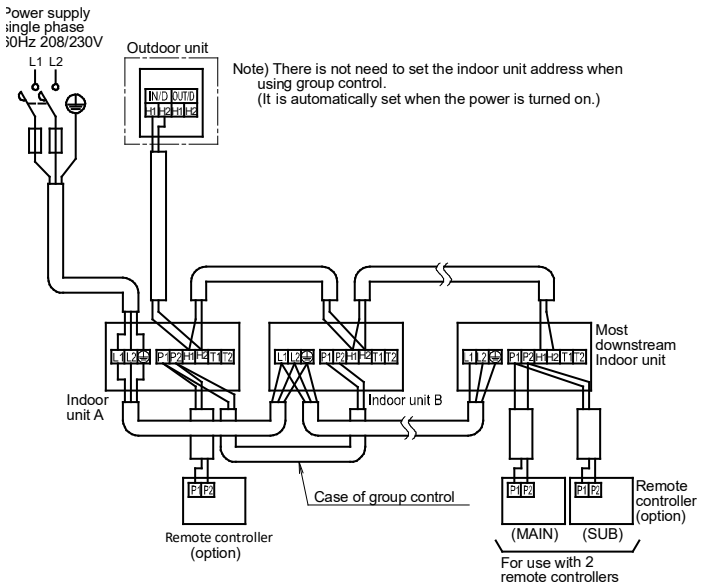

FIGURE 24

When one remote controller is used with multiple indoor units which are different models from each other (for example FXTA and FXFA), some field setting menu may not display on remote controller. Follow steps below for such case.

1. Set up indoor unit A with appropriate field settings.

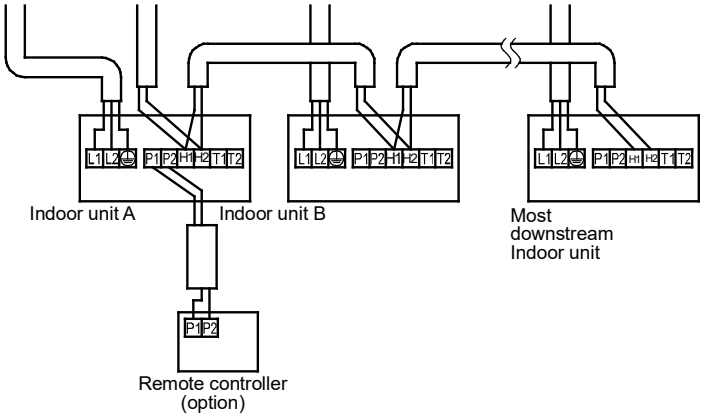

FIGURE 25

2. Turn power OFF.
3. Move the remote controller from indoor unit A to indoor unit B.

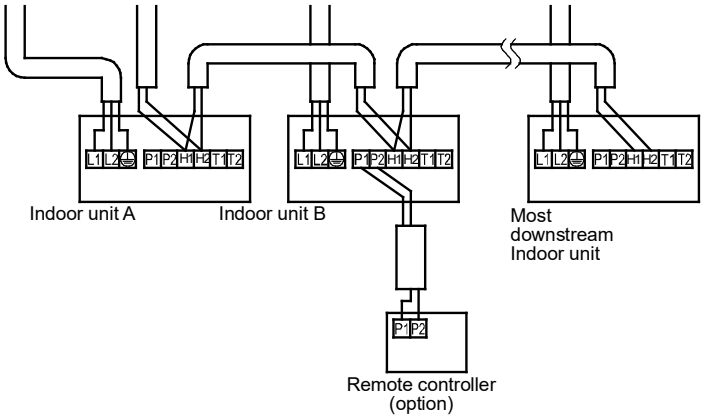

FIGURE 26

4. Turn power ON, set indoor unit B with appropriate settings.
5. Repeat Step 2 to Step 4 for the rest of the indoor units.
6. Complete the connections after all of the indoor unit settings are finished.

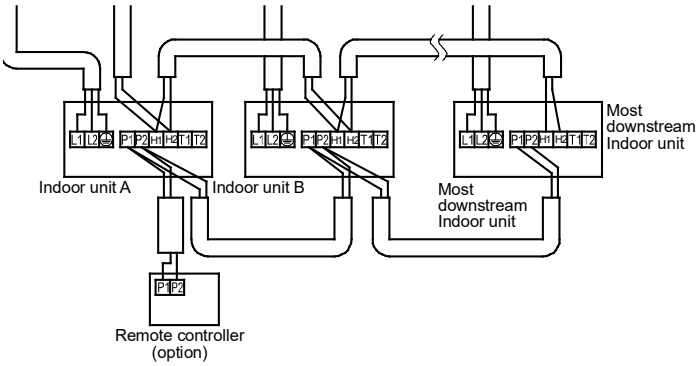

FIGURE 27

NO. 3 SYSTEM:
When including BS unit or safety shutoff valve.

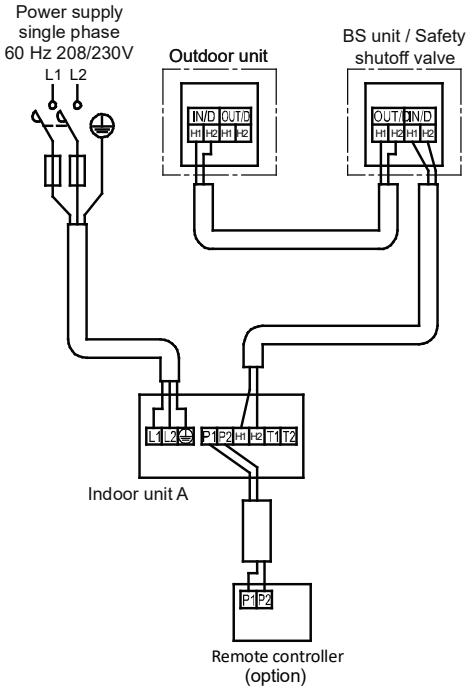

FIGURE 28

7.5 CONTROL BY 2 REMOTE CONTROLLERS

Controlling 1 indoor unit by 2 remote controllers

When using 2 remote controllers, one must be set to “MAIN” and the other to “SUB”.

Refer to the installation manual of the controller for setting the “MAIN” and “SUB” controller.

PRECAUTIONS

- Daisy chain wiring is needed when using group control and 2 remote controllers at the same time.
- Connect the indoor unit at the end of the crossover wire (P1, P2) to remote controller 2 (SUB).

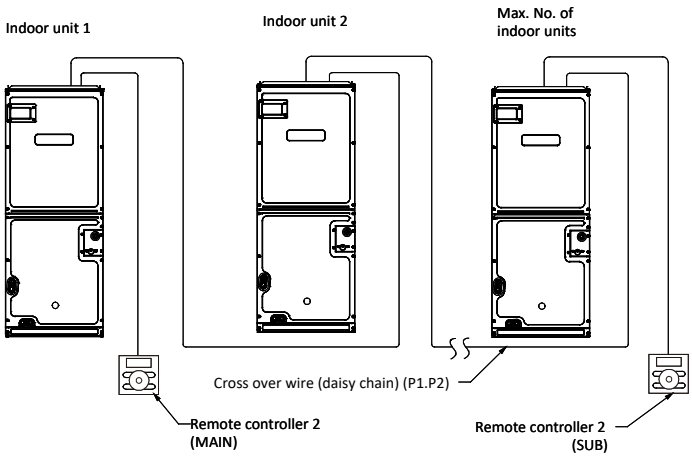

FIGURE 29

7.6 External ON/OFF Input (Forced OFF and ON/OFF Operation)

The control is equipped with two External ON/OFF Input terminals, labeled T1 and T2 which are typically utilized in series. The External ON/OFF Input switch has different ON/OFF behavior depending on the field setting of this function by the remote controller.

For example, when set to Forced OFF mode [12(22)-1-01], a normally opened fire alarm (Input A) switch will close when the alarm is triggered. Then T1-T2 is closed, the control will stop the indoor unit from operating.

- Connect input lines from the outside to the T1 and T2 of terminal block X1M (8P) on the printed circuit board.

(The switch is opened as part of the default factory setting.) See picture (Figure 30) for the connection location.

See “8.2 External ON/OFF Input (T1, T2)” for field settings.

- See the **“8.2 External ON/OFF Input (T1, T2)”** for details on operation.

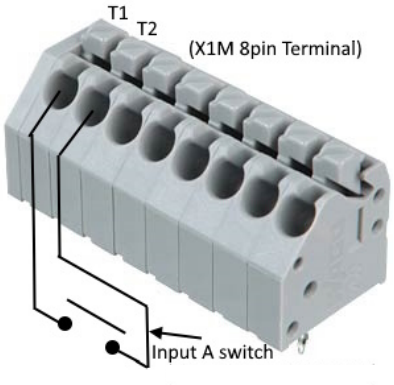

Figure 30

Wire Specification	Sheathed Vinyl Cord or Cable (2 wires)
Gauge	AWG18-16
Length	Max. 328 ft.
External Terminal	Contact that can ensure the minimum applicable load of 16V DC, 1mA.

IMPORTANT NOTE: If any of the refrigerant leak detection related error codes (A0-19, A0-17 and CH-11) are detected at the same time, the leak detection error (fan ON and relay K6R energized) takes priority. But the final action to be taken will differ depending on the field settings as follows. See “8.2 External ON/OFF Input (T1,T2)” for field settings”.

Table: Operation for each setting when “Unit stopped due to T1-T2 input signal” and “Refrigerant leak is detected or refrigerant leak detection sensor has failed”.

External ON/OFF Input setting	Forced Off(*)	ON/OFF Operation	System/ Equipment Protection
Fan action	Forced off (stop) takes priority. (Fan mitigation action is not performed)	Mitigation action takes priority. (Fan operated)	
Refrigerant leak detection output [TB13-TB12(NC), TB13-TB11(NO), TB6-TB8(NO) and Option Ventilation and Alarm Adaptor (BRP9A71 or BRP9A72) [X40A](NO)]	When the leak is detected, the leak detection output turn on. [Turn on state] TB13-TB12: open, TB-13-TB11: close and Option Ventilation and Alarm Adaptor: close		

*Factory Set

7.7 Auxiliary Alarm Switch

The control is equipped with two Auxiliary Alarm terminals, labeled TB4 and TB5 (2VA or less) which are typically utilized in series with a condensate switch.

The auxiliary alarm switch must be normally closed and open when the alarm occurs. For example, a normally closed condensate switch will open when the base pan’s water level reaches a particular level. The control will respond by turning off the blower motor and displaying the proper fault codes.

If the switch is later detected closed, normal operation resumes and the error message is removed. (The switch is closed as part of the default factory setting.) The error (A0-01) will be maintained in the equipment’s fault history. See Figure 31.

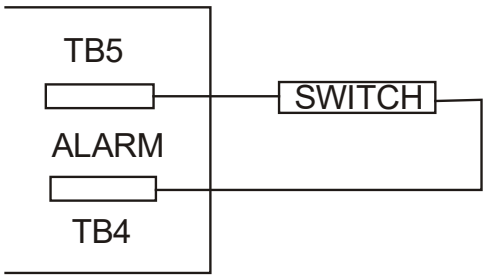

Figure 31

7.8 Centralized Control

For centralized control, it is necessary to designate the group No. For details, refer to the manual of each optional controller for centralized control.

7.9 Leak Detection Output (Relay K6R)

The control board is equipped with three Refrigerant Leak Detection terminals, labeled TB11, TB12 and TB13 that are used for the control of optional kits (zoning damper, UV light, ventilator) when a refrigerant leak is detected, the error codes being A0-19, A0-17 or CH-11. Between TB12 and TB13 are normally closed, TB11 and TB13 are normally opened. When the A0-19, A0-17 or CH-11 error is issued, TB12-TB13 is open, and TB11-TB13 is closed. See the table 2 for the conditions of relay K6R when the error code is issued. This output can be used to fully open zoning dampers, turn off UV lights, or activate ventilation if an A0-19, A0-17, or CH-11 error code is issued. Once these error codes are cleared, these outputs will return to their normal state after 5 minutes.

See the Table 2 for the specification for relay K6R and fasten and wiring diagram for the terminals' location.

Items	When A0-19, A0-17 CH-11 not issued	When A0-19, A0-17 CH-11 issued	Maximum Load (Type / Voltage / Current)
TB12-TB13 (NC)	CLOSE	OPEN	PILOT/24 VAC/1.1 A
TB11-TB13 (NO)	OPEN	CLOSE	PILOT/24 VAC/1.1 A

Relay K6R when A0/A1/AF is issued

Table 2

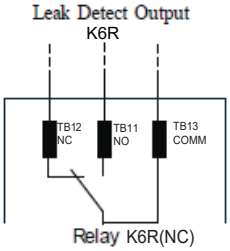

8. FIELD SETTING

Field settings may have to be performed using the remote controller, depending on the type of installation.

1. Make sure the electric component box covers are closed on the indoor and outdoor units.
2. Depending on the type of installation, make the field settings from the remote controller after the power is turned on, following the "Field Settings" manual which came with the remote controller.

- The settings can select "Mode No.", "FIRST CODE NO." and "SECOND CODE NO.".
- Field settings are normally applied to the entire remote control group, however if individual indoor units in the remote control group require specific settings or for confirmation that settings have been established, utilize the "Mode No." in parenthesis.
- The "Field Settings" included with the remote controller lists the order of the settings and method of operation.
- Make sure the customer keeps the "Field Settings" manual, along with the operating manual, in a safe place.

8.1 Settings When Using the Optional Remote Sensor

This product does not include an air inlet thermistor. It uses a remote controller thermistor for control purposes. For this reason, it is necessary to install an optional remote sensor in the following cases:

- When the remote controller will be installed at a location where it cannot accurately measure the indoor temperature.
- When using a remote controller without a built-in thermistor (simple remote controller, wireless remote controller, no remote controller).

When using an optional remote sensor, change the settings as described Table 3.

Room Temperature Sensor Selection	Mode No.	First Code No.	Second Code No.
To use only the remote sensor	10(20)	2	02
To use only the remote controller thermistor			03*

*Factory Set

Table 3

Indoor units settings must be changed to Available as per Table 4 when group remote control is used.

Indoor units not using group remote control may remain on factory settings.

Remote Controller Thermistor (Group Control Only)	Mode No.	First Code No.	Second Code No.
Not available	10 (20)	6	01*
Available			02

*Factory Set

Table 4

8.2 External ON/OFF Input (T1, T2)

Forced off and ON/OFF operation should be selected by selecting the SECOND CODE NO. as shown in Table 5.

External ON/OFF Input	Mode No.	First Code No.	Second Code No.
Forced Off	12/(22)	1	01*
ON/OFF Operation			02
System/Equipment Protection			03

*Factory Set

Table 5

Input A of forced off and ON/OFF operation work as shown in Table 6.

Forced Off	ON/OFF Operation	System/ Equipment Protection
Input A “on” to force a stop (remote controller reception prohibited)	Unit operated by changing input A from “off” to “on”	Input A “on” to operate
Input A “off” to allow remote controller	Unit stopped by changing input A from “on” to “off”	Input A “off” to stop system, Target unit will display error code A0-0. Other indoor units will display error code U9.

Table 6

If between T1 and T2 is ON (closed) when a refrigerant leak is detected, the operation differs depending on the following settings. Please see also “7.6 External ON/OFF Input”.

- When set to “01”: The fan will be stopped (leak mitigation operation will start).
- When set to “02” or “03”: The fan will be turned ON (leak mitigation operation will start).

8.3 Setting The Filter Life Sign Display

- Explain the following to the customer if the filter life sign settings have been changed.
- The filter life sign display time is set to 2500 hours (equivalent to 1 year’s use) when shipped.
- The settings can be changed to not display.
- When installing the unit in a dusty place, set the filter life time to shorter intervals (1,250 hours).
- Explain to the customer that the filter needs to be cleaned regularly to prevent clogging and also the time that is set.

Function				Filter life time	
	Mode No.-First Code No.			10(20)-0	
		Second Code No.		01*	02
				(Standard)	(Short)
Filter life type	10(20)-1	01*	(Standard)	**2500 hr**	**1250 hr**
		02	(Long)	**10000hr**	**5000hr**
Filter life sign display	10(20)-3	01*	(ON)	**Display ON**	
		02	(OFF)	**Display OFF**	

*Factory Set

8.4 Return Air Filter

Installation NOTE: If installing a filter, an external filter must be used when installing the unit in Horizontal Right, or if the side drain pan is not removed for Down Flow application. A filter will not fit on the internal filter rails in these applications.

Each installation must include a return air filter. This filtering may be performed at the air handler using the factory filter rails or externally such as a return air filter grille. When using the factory filter rails, a nominal 16x20x1”, 20x20x1” or 24x20x1” (actual dimension must be less than 23-½”x20”) filter can be installed. Washable versions are available through your local Daikin distributor.

IMPORTANT NOTE: If appliance is equipped with UVC coil and air purifier, turn off the appliance before opening filter access door panel to change and install filter.

CAUTION

Do not operate this product without all the ductwork attached.

8.5 Electric Heat

Refer to the installation manual provided with the electric heat kit for the correct installation procedure. All electric heat must be field installed. If installing this option, the ONLY heat kits that are permitted to be used are the Daikin produced HKTS series. Refer to the air handler unit’s Serial and Rating plate or the HKTS specification sheets to determine the heat kits compatible with a given air handler. No other accessory heat kit besides the HKTS series may be installed in these air handlers. The heating mode temperature rise is dependent upon the system airflow, the supply voltage, and the heat kit size (kW) selected.

TR = (kW x 3412) x (Voltage Correction)/(1.08 x CFM)

Where:

TR = Temperature Rise
kW = Heater Kit Actual kW
3412 = Btu per kW
VC* = .96 (230 Supply Volts)
= .92 (220 Supply Volts)
= .87 (208 Supply Volts)
1.08 = Constant
CFM = Measured Airflow
*VC (Voltage Correction)

NOTE: The Temperature Rise Calculations can also be used to estimate the air handler airflow delivery. When using these tables for this purpose set the room thermostat to maximum heat and allow the system to reach steady state conditions. Insert two thermometers, one in the return air and one in the supply air. The temperature rise is the supply air temperature minus the return air temperature. Using the temperature rise calculated, CFM can be estimated from the TR formula above. See Specification Sheet and/or Service Manual for more information.

Electric Heater Kit Selection Setting 39(49)-1-XX

Model	Mode No.	First Code No.	HEATER (kW)									
			No Heat Kit*	Single Phase								
				3	5	6	8	10	15	19	20	25
			Second Code No.									
			01*	02	03	04	05	06	07	08	09	10
FXTA09*	39(49)	1	x	x	x							
FXTA12*			x	x	x	x						
FXTA18*			x	x	x	x	x	x				
FXTA24*			x	x	x	x	x	x				
FXTA30*			x	x	x	x	x	x				
FXTA36*			x	x	x	x	x	x				
FXTA42*			x		x	x	x	x	x	x		
FXTA48*			x		x	x	x	x	x	x		
FXTA54*			x		x	x	x	x	x		x	x
FXTA60*			x		x	x	x	x	x		x	x

*	Factory Set
X	Available
	Not Available

Electric Heater Function Setting 39(49)-0-XX

Heater Operation Mode	xx			
	01(*)	02	07	08
Heat Pump Heat with Electric Heater	Not allowed	Allowed	Not allowed	Allowed
Defrost/Oil return with Electric Heater	Not allowed	Not allowed	Allowed (Note1, 2)	Allowed (Note1, 2)
Heat Pump Lockout with Electric Heater	Allowed	Allowed	Allowed	Allowed

*Factory Set

NOTE 1: Electric heater does not turn on during defrost unless in a heat pump lockout state.

NOTE 2: If the remote controller has a lockout function and it is enabled, the electric heater does not turn on even if this lockout occurs during defrost or oil return.

Electric Heater Setting
Mode No. 39(49)
First Code No. 0
Second Code No. XX

8.5.1 Electric Heater ON/OFF Temperature Setting

When an auxiliary heater is installed and controlled by the indoor unit, the heater ON/OFF temperatures, Ton and Toff, can be selected individually by switching the 1st code and 2nd code according to the following table.

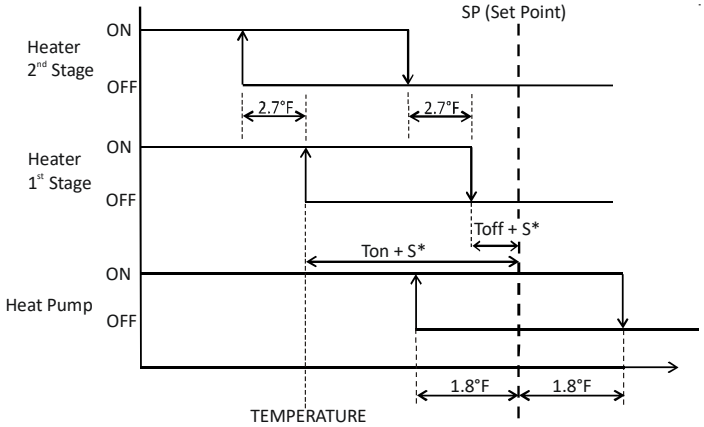

*"S" Value varies automatically based on the room temperature trend

Electric Heater & Heat Pump Operation Mode
Figure 32

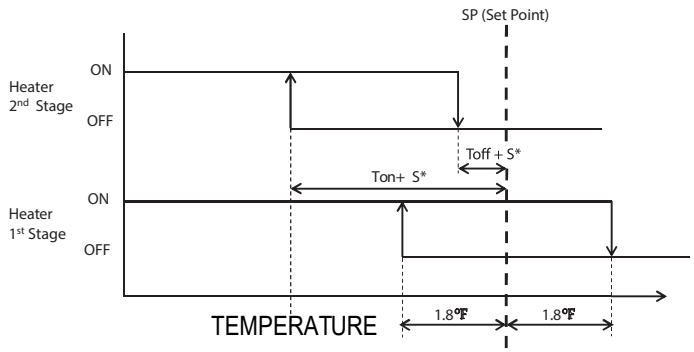

"S" Value varies automatically based on the room temperature trend

Electric Heater Operation Mode
Figure 33

Perform on-site setting using the remote controller.

Temperature difference must be 3.6ºF or more between "Ton" and "Toff" to activate setting(s).

°F (°C)

SYMBOL	MODE NO.	FIRST CODE	SECONE CODE NO.					
			01*	02	03	04	05	06
Ton	11(21)	1	-7.2 (-4.0)	-6.3 (-3.5)	-5.4 (-3.0)	-4.5 (-2.5)	-3.6 (-2.0)	-2.7 (-1.5)
Toff		2	-3.6 (-2.0)	-2.7 (-1.5)	-1.8 (-1.0)	-0.9 (-0.5)	0 (0)	0.9 (0.5)

*Factory Set

8.6 Dry Mode 2.0

11(21)-12-XX
Choose dry mode settings as per following table:

XX	01 (*)	02
DRY mode	Set Point = Room Temperature	Set Point became same as cooling mode set point

Mode No. 11(21)
First Code No. 12
Second Code No. XX

8.7 Accessory Contacts

Depending on the following field settings of the remote controller, the following outputs can be obtained at the accessory contacts (TB6-TB8) on the PCB of the indoor unit.

Function	MODE NO.	FIRST CODE	SECOND CODE NO.	
			01(*)	02
Accessory Contacts	39(49)	6	Refrigerant leak detection and Refrigerant leak detection sensor failure linkage (The contact closes when the leak is detected)	Fan operation linkage (The contact closes when the fan is operated)

*Factory Set

8.8 Refrigeration Detection System (RDS)

Function: Refrigerant Detection System (RDS) is installed in this equipment to detect any R32 leakage in the coil and take action to mitigate any risk of ignition/ fire.

Operation: When there is a leak detected, or refrigerant leak detection sensor failure the RDS shall send signals for the unit to perform these actions:

1. Turn on the blower to circulate air with Mitigation CFM
2. Switch off electric heater
3. Error code A0-19, A0-17 or CH-11 issued
4. Fully open damper (*1)
5. Switch off UV light (*1)

Mitigation CFM: When the one of the error codes A0-19, A0-17, CH-11 that is related to refrigerant leak detection system is issued, the blower is activated with the mitigation.

(*1) If the damper and/or UV lamp are installed in the field, be sure to use the "7.9 Leak detection output" function and construct the wiring so that they will activate as mentioned above when a leak is detected.

Servicing: Before servicing identify the Mode of operation of the system by reading the error code on the remote controller. After identifying the mode of operation take recommended actions as specified in Table DIAGNOSTIC CODES.

Instruction to replace Printed circuit board: Take off the blower access panel, disconnect the Printed circuit board harness and A2L sensor wire connected to the Printed circuit board, detach the Printed circuit board. Install new Printed circuit board, re-connect the Printed circuit board harness and A2L sensor wire to the new Printed circuit board per wiring instruction as attached to the equipment, reassemble the blower access panel to the unit.

Instruction to replace A2L sensor: Take off the blower access panel and coil access panel, take off the drain port gasket on the drain pan in front of the sensor bracket, disconnect the A2L sensor wire from the Printed circuit board, take off sensor bracket assembly from the drain pan, remove plastic push pins and A2L sensor off the sensor bracket, install new A2L sensor and plastic push pins to sensor bracket, re-install A2L sensor bracket assembly to the drain port correctly as shown in the figures 7, 8, 9 and 10. The "FRONT 0121A*****" print on sensor bracket should be facing away from the equipment, place gaskets back to the drain ports correctly. The "FRONT" print on the gaskets should be in the front facing away from the equipment, reassemble the blower access panel and coil access panel to the unit.

8.9 Refrigerant Leak Test

Conduct Refrigerant Leak Test to check that the refrigerant leak detection system works when a damper and/or UV light are installed.

To start the operation test when refrigerant is detected, switch the following field setting of the remote controller to ON.

Function	MODE NO.	FIRST CODE	SECOND CODE NO.			
			01(*)	02	03	04
Refrigerant Leak Test (Test Duration)	39(49)	4	OFF	ON (60min)	ON (120min)	ON (180min)

*Factory Set

When switched ON, the following inspection operations are performed.

- The relay contact (K6R) switches to the state when a leak is detected (See “7.9 Leak Detection Output (Relay K6R)”).
- When “8.7 Accessory Contact” is set to “01”, TB6-TB8 will be ON (closed).
- When the optional “Ventilation and Alarm Adaptor (BRP9A71 or BRP9A72)” is installed, the contact switches to the state when a leak is detected.
- Operations other than those mentioned above follow the operating state of the remote controller.

To end the refrigerant leak test, switch the following field setting of the remote controller to OFF. (Or it will automatically switch to the OFF setting after the set time has elapsed.)

9. ACCESSORIES

1. Installation of the humidifier, and economizer.

   Humidifier, and economizer (11.5VA each terminal) are sold separately. For the method of installation, refer to the manual provided with each optional product.

WARNING

IF THE UNIT IS INSTALLED WITH AN ELECTRIC HEATER, INSTALL THE OPTIONAL PRODUCT AT A LOCATION WHERE IT IS NOT EXPOSED DIRECTLY TO THE HEAT FROM THE ELECTRIC HEATER. DIRECT EXPOSURE TO HEAT CAN RESULT IN AN EQUIPMENT MALFUNCTION OR FIRE.

2. Connect the wires.
   - Run the wires through knockout hole.
   - Connect the wires to the terminal block of the product. Refer to wiring diagram inside the unit for wire connections.
3. On-site setting of air purifier/humidifier.

Terminal Name	Input/output signal
CONTROL ON/OFF	Outputs: indoor unit ON (AC 24V) 11.5VA or less
ECONOMIZER 2	Output: indoor unit cooling THERMO ON (AC 24V) 11.5VA or less
ECONOMIZER 1	Receives input: Economizer operation ON (Dry contact)
HUMIDIFIER	Receives input: Humidifier operation ON (Dry contact)
AIR CLEANER	Receives input: Air purifier operation ON (Dry contact)

39(49)-5-XX

XX	01	02	03	04	05
Humidifier Fan speed	Refer to controller	High	Refer to controller	High	Refer to controller
Economizer setting for Mech standby duration (min)	10	10	20	20	30

XX	06	07	08	09	10
Humidifier Fan speed	High	Refer to controller	High	Refer to controller	High
Economizer setting for Mech standby duration (min)	30	40	40	50	50

XX	11	12	13	14 (*)
Humidifier Fan speed	Refer to controller	High	Refer to controller	High
Economizer setting for Mech standby duration (min)	60	60	Free cooling only	Free cooling only

(*) Factory Set

HUMIDIFIER + ECONOMIZER OPTIONAL KIT SETTING
MODE NO. 39(49)
FIRST CODE NO. 5
SECOND CODE NO. XX

9.1 SETTING FOR SEPARATELY SOLD ACCESSORIES

- See the instruction manuals included with optional accessories for the necessary settings.

9.2 UV COIL AND AIR PURIFIERS

Clean Comfort brand UV coil purifiers also can be purchased from distributor. Maximum UV lamp diameter to be used is 1.375” to reduce the possibility of air leak.

The power source must be installed external of the unit. Ensure that the wiring is routed though the access panel knockout with the grommet included. A magnetic door switch must be installed to avoid an accidental ultraviolet exposure during service. UV-C radiation hazard label must be placed on any door or access panel.

Refer to UV coil purifiers product specification and installation manual for additional details.

NOTE: FOR MODEL SPECIFIC UVC KIT DETAILS PLEASE REFER ENGINEERING DATA BOOK.

UVC light conversion kit is required to install with the UVC light, for installation refer to the UVC drain pan kit installation manual IO-7023 for additional details.

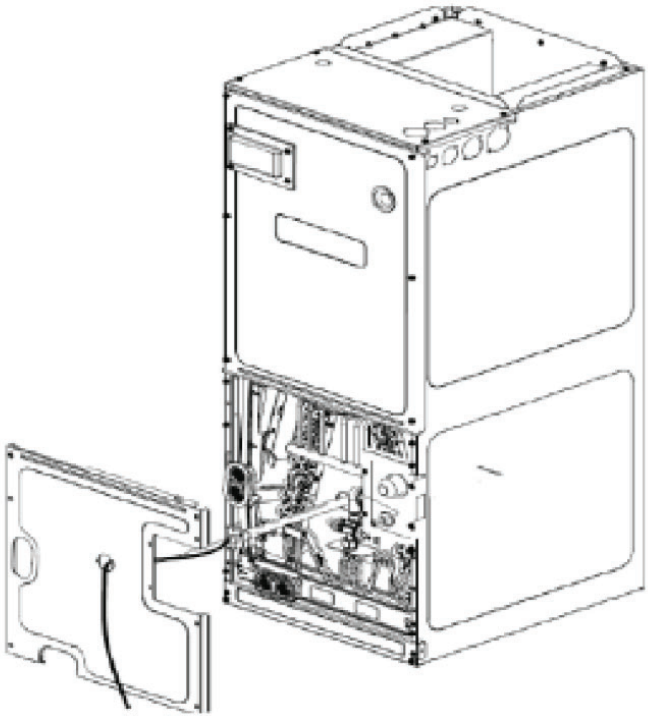

Figure 34

10. TEST RUN

- Perform a test run according to the outdoor unit's installation manual.
- The operation lamp of the remote controller will flash when a malfunction occurs. Check the malfunction code on the liquid crystal display to identify the point of trouble. An explanation of malfunction codes and the corresponding trouble is provided in "CAUTION FOR SERVICING" of the outdoor unit.

  If the display shows any of the following, there is a possibility that the wiring was done incorrectly or that the power is not on, so check again.

Remote control display	Content
" CENTRAL CONTROL " display	There is a short circuit at the FORCED OFF terminals (T1 T2).
"U3" display	The test-run has not been performed.
"U4" display "UH" display	The power on the indoor unit is off. The outdoor unit has not been wired for power supply. Wiring is incorrect for the transmission wiring and/or FORCED OFF wiring. The transmission wiring is cut.
"UF" display	Reversed transmission wiring
No display	The power on the indoor unit is off. The indoor unit has not been wired for power supply. Wiring is incorrect for the remote controller wiring, transmission wiring and/or FORCED OFF wiring. The transmission wiring is cut.

CAUTION

Always stop the test run using the remote controller to stop operation.

THE FOLLOWING INSTRUCTIONS ARE MANDATORY FOR A2LSYSTEMS AND SUPERSEDE OTHER INSTRUCTIONS

WARNING

Only brazing techniques or approved mechanical joints should be used to connect refrigerant tubing connections. Non-approved mechanical connectors and other methods are not permitted in this system containing A2L refrigerant. Approved mechanical joints will be detailed in the product's specification sheets.

Accessory Installation

WARNING

All accessories that may be a source of ignition must be shut down and have their dampers fully open if a refrigerant leak is detected. Please wire the accessories using the signal from the Leak Detection Output (Relay K6R) or Ventilation and Alarm Adaptor (option).

A2L System Servicing

This system is charged with R32 refrigerant. R32 is classified as A2L (Mildly flammable) as per ASHRAE 34. This product shall be maintained, serviced, decommissioned with the prevailing local/federal codes for A2L refrigerant.

Guidelines

When breaking into the refrigerant circuit to make repairs - or for any other purpose - conventional procedures shall be used. However, the flammability classification for any refrigerant must be considered. The following procedure shall be adhered to:

1. Safely remove refrigerant following local and national regulations;
2. Evacuate;
3. Purge the circuit with inert gas;
4. Evacuate;
5. Continuously flush or purge with inert gas when using flame to open circuit; and
6. Open the circuit.

The minimum test pressure for the low side of the system shall be low side Maximum Allowable Pressure and the minimum test pressure for the high side of the system shall be high side Maximum Allowable Pressure, unless the high side of the system cannot be isolated from the low side of the system in which case the entire system shall be pressure tested to the low side Maximum Allowable Pressure. Max Allowable Pressure is mentioned on the serial and rating plate. Use dry nitrogen for pressure testing. No refrigerant shall be used for pressure testing to detect leaks.

Field brazed joints indoors shall be tightness tested. The test method shall have a sensitivity of 5 grams per year of refrigerant or better under a pressure of at least 0.25 times the maximum allowable pressure. No leak shall be detected (Should be leak tight).

Under no circumstances shall potential sources of ignition be used in the searching for or detection of refrigerant leaks.

A halide torch (or any other detector using a naked flame) shall not be used. If a leak is suspected, all naked flames shall be removed/extinguished. If a leakage of refrigerant is found which requires brazing, all of the refrigerant shall be recovered from the system, or isolated (by means of shut off **valves) in a part of the system remote from the leak.**

The following leak detection methods have been deemed acceptable, provided proper care is taken in their implementation:

1. Electronic leak detectors rated for use with R32 refrigerant. Ensure the detection equipment is calibrated in a refrigerant-free area and that the leak detector itself is not a potential source of ignition. Leak detection equipment shall be set at a value of no more then 0.075 kg/m3.
2. Leak detection fluids - such as the bubble method or fluorescent method. Ensure that the use of detergents containing chlorine are avoided as they chlorine may react with the refrigerant and corrode the pipe-work.

For appliances containing flammable refrigerants, refrigerants purging shall be achieved by breaking the vacuum in the system with oxygen-free nitrogen and continuing to fill until the working pressure is achieved, then venting to atmosphere, and finally pulling down to a vacuum. This process shall be repeated until no refrigerant is within the system. When the final oxygen-free nitrogen charge is used, the system shall be vented down to atmospheric pressure to enable work to take place.

The outlet for the vacuum pump shall not be close to any potential ignition sources, and ventilation shall be available.

Refrigerant Recovery

When removing refrigerant from a system, either for servicing or decommissioning, all refrigerants must be removed safely. When transferring refrigerant into cylinders, ensure that only appropriate refrigerant recovery cylinders are employed. Ensure that the correct number of cylinders for holding the **total system charge** are available. All cylinders to be used are designated for the recovered refrigerant and labeled for that refrigerant (i.e. special cylinders for the recovery of refrigerant). Cylinders shall be complete with pressure-relief valve and associated shut-off valves in good working order. Empty recovery cylinders are evacuated and, if possible, cooled before recovery occurs.

All recovery equipment must be suitable for the recovery of A2L refrigerant and in good working order. Ensure that you follow the manufacturer’s instructions carefully. If in doubt, the manufacturer should be consulted. In addition, a set of calibrated weighing scales shall be available and in good working order. Hoses shall be complete with leak-free disconnect couplings and in good condition. The recovered refrigerant shall be processed according to local legislation in the correct recovery cylinder, and the relevant waste transfer note arranged. Do not mix refrigerants in recovery units and especially not in cylinders.

AIR HANDLER

AIR HANDLER HOMEOWNER'S ROUTINE MAINTENANCE RECOMMENDATIONS

*We strongly recommend a bi-annual maintenance checkup be performed before the heating and cooling seasons begin by a **qualified servicer.***

Replace or Clean Air Filter

IMPORTANT NOTE: Never operate unit without a filter installed as dust and lint will build up on internal parts resulting in loss of efficiency, equipment damage and possible fire.

An indoor air filter must be used with your comfort system. A properly maintained filter will keep the indoor coil of your comfort system clean. A dirty coil could cause poor operation and/or severe equipment damage.

Your air filter or filters could be located in your furnace, in a blower unit, or in "filter grilles" in your ceiling or walls. The installer of your air conditioner or heat pump can tell you where your filter(s) are, and how to clean or replace them.

Check your filter(s) at least once a month. When they are dirty, replace or clean as required. Disposable type filters should be replaced. Reusable type filters may be cleaned.

You may want to ask your dealer about high efficiency filters. High efficiency filters are available in both electronic and non-electronic types. These filters can do a better job of catching small airborne particles.

Motors

Indoor and outdoor fan motors are permanently lubricated and do not require additional oiling.

WARNING

HIGH VOLTAGE
Disconnect all power before servicing or installing this unit. Multiple power sources may be present. Failure to do so may cause property damage, personal injury or death.

Aluminum Indoor Coil Cleaning (Qualified Servicer Only)

This unit is equipped with an aluminum tube evaporator coil. The safest way to clean the evaporator coil is to simply flush the coil with water. This cleaning practice remains as the recommended cleaning method for both copper tube and aluminum tube residential evaporator coils.

It has been determined that many coil cleaners and drain pan tablets contain corrosive chemicals that can be harmful to aluminum tube and fin evaporator coils. Even a one-time application of these corrosive chemicals can cause premature aluminum evaporator coil failure. Any cleaners that contain corrosive chemicals including, but not limited to, chlorine and hydroxides, should not be used.

An alternate cleaning method is to use one of the products listed in TP-109* to clean the coils. The cleaners listed are the only agents deemed safe and approved for use to clean round tube aluminum coils. TP-109 is also available on the web site in Partner Link > Service Toolkit.

NOTE: Ensure coils are rinsed well after use of any chemical cleaners.

CAUTION

To avoid risk of equipment damage or fire, install the same amperage breaker or fuse as you are replacing. If the circuit breaker or fuse should open again within thirty days, contact a qualified servicer to correct the problem. If you repeatedly reset the breaker or replace the fuse without having the problem corrected, you run the risk of severe equipment damage.

Before you Call your Servicer

- Check the controller to confirm that it is properly set.
- Wait 15 minutes. Some devices in the outdoor unit or in programmable controllers will prevent compressor operation for awhile, and then reset automatically. Also, some power companies will install devices which shut off air conditioners for several minutes on hot days. If you wait several minutes, the unit may begin operation on its own.
- Check the electrical panel for tripped circuit breakers or open fuses. Reset the circuit breakers or replace fuses as necessary.
- Check the disconnect switch near the indoor furnace or blower to confirm that it is closed.
- Check for obstructions on the outdoor unit. Confirm that it has not been covered on the sides or the top. Remove any obstruction that can be safely removed. If the unit is covered with dirt or debris, call a qualified servicer to clean it.
- Check for blockage of the indoor air inlets and outlets. Confirm that they are open and have not been blocked by objects (rugs, curtains or furniture).
- Check the filter. If it is dirty, clean or replace it.
- Listen for any unusual noise(s), other than normal operating noise, that might be coming from the outdoor unit. If you hear unusual noise(s) coming from the unit, call a qualified servicer.

WIRING DIAGRAM

WARNING

HIGH VOLTAGE!
DISCONNECT ALL POWER BEFORE SERVICING OR INSTALLING THIS UNIT. MULTIPLE POWER SOURCES MAY BE PRESENT. FAILURE TO DO SO MAY CAUSE PROPERTY DAMAGE, PERSONAL INJURY OR DEATH.

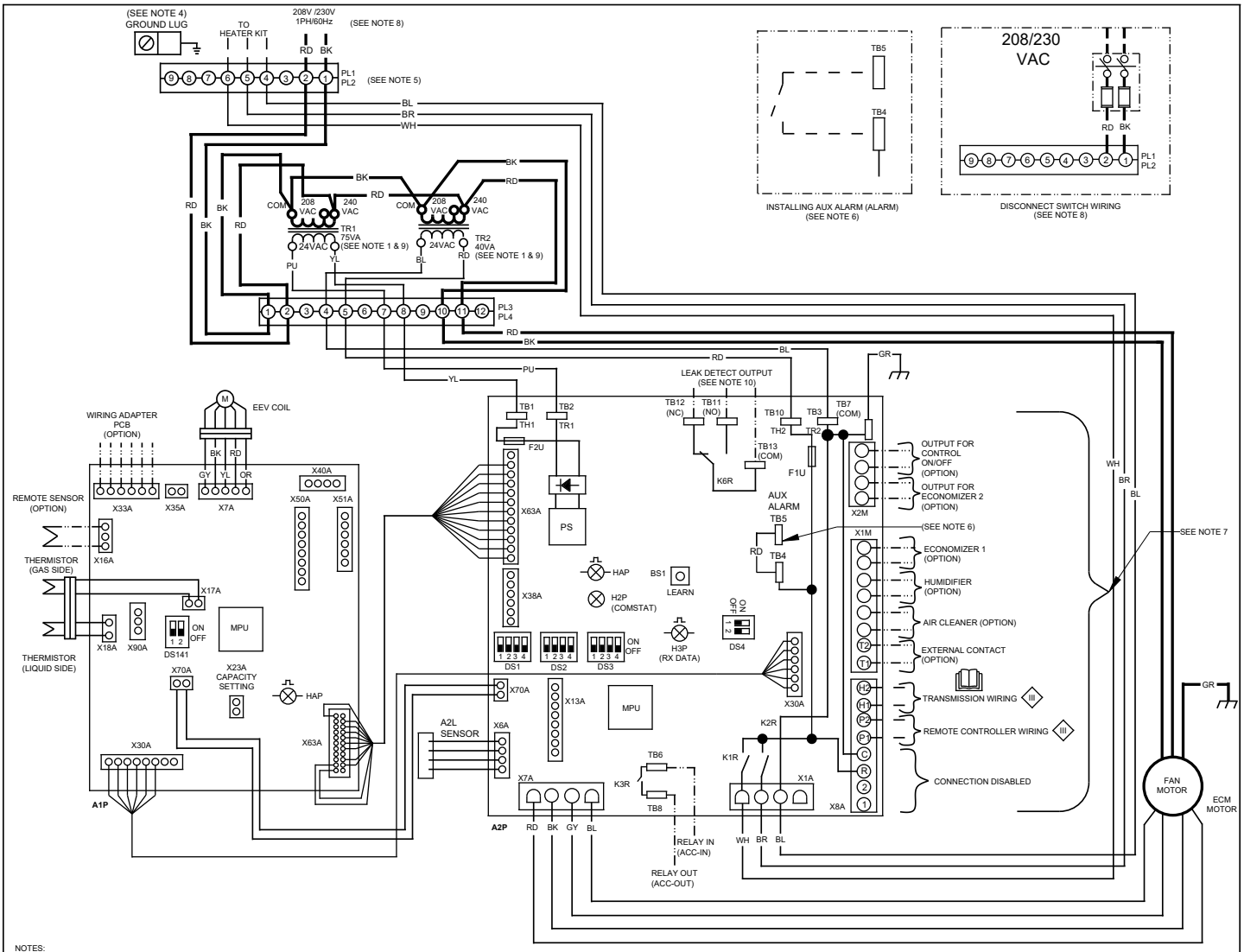

NOTES:

1. FOR 208V OPERATION, RELOCATE RED WIRE TERMINAL ON TRANSFORMERS (TR1) AND (TR2) FROM 240V TO 208V.
2. THE MANUFACTURER'S SPECIFIED REPLACEMENT PARTS MUST BE USED WHEN SERVICING.
3. IF ANY OF THE ORIGINAL WIRES AS SUPPLIED WITH THIS UNIT MUST BE REPLACED, IT MUST BE REPLACED WITH WIRING MATERIAL HAVING A TEMPERATURE RATING OF AT LEAST 105°C. USE COPPER CONDUCTORS ONLY.
4. THE UNIT MUST BE PERMANENTLY GROUNDED AND CONFORM TO N.E.C AND LOCAL CODES.
5. DISCARD CONNECTOR PL1 WHEN INSTALLING OPTIONAL HEAT KIT.
6. REMOVE RED JUMPER ON INDOOR UNIT PCB BOARD (TB4 AND TB5) AND REPLACE WITH AUX ALARM SWITCH FROM THE KIT.
7. USE N.E.C CLASS 2 WIRE.
8. TO INSTALL THE DISCONNECT SWITCH, CONNECT RED AND BLACK WIRES TO THE LOAD SIDE OF THE DISCONNECT.
9. LOW VOLTAGE TRANSFORMER RATED 24VAC OUTPUT 40VA @ AMP 1.67A. AND 75VA @ AMP 3.125A.
10. THIS OUTPUT OPERATES WHEN A REFRIGERANT LEAKS IS DETECTED. (DRY CONTACT) USE THIS CONTACT WHEN INTERLOCKING UV LIGHT, DAMPER, VENTILATION, ETC.

INTEGRATED CONTROL:

- LOW VOLTAGE
- LOW VOLTAGE FIELD
- OPTIONAL LOW VOLTAGE
- HIGH VOLTAGE
- HIGH VOLTAGE FIELD
- OPTIONAL HIGH VOLTAGE
- JUNCTION
- TERMINAL
- PLUG CONNECTION
- EQUIPMENT GROUND
- FIELD GROUND

COLOR CODES:

- BL - BLUE
- RD - RED
- YL - YELLOW
- OR - ORANGE
- BK - BLACK
- GY - GREY
- BR - BROWN
- GR - GREEN
- WH - WHITE
- PU - PURPLE

COMPONENT CODES:

- PL1, PL2 — POWER/HEATER KIT/ DISCONNECT SWITCH CONNECTOR
- TR1, TR2 — TRANSFORMER
- F1U, F2U — FUSE LINK
- PL3, PL4 — TRANSFORMER CONNECTOR
- MPU — MICROPROCESSOR
- PS — POWER SUPPLY
- BS1 — BUTTON SWITCH
- READ THE INSTRUCTIONS
- CLASS III
- DISCONNECT SWITCH
- ON OFF — DIP SWITCH(OFF)
- FLASHING LED
- LED

0140A20066-A

Wiring is subject to change. Always refer to the wiring diagram on the unit for the most up-to-date wiring.

START-UP CHECKLIST

Air Handler / Coil				
	Model Number	_____		
	Serial Number	_____		
ELECTRICAL				
Line Voltage (Measure L1 and L2 Voltage)	L1 - L2	_____		
Secondary Voltage (Measure Transformer Output Voltage)	R - C	_____		
Blower Amps		_____		
Heat Strip 1 - Amps		_____		
Heat Strip 2 - Amps		_____		
BLOWER EXTERNAL STATIC PRESSURE				
Return Air Static Pressure		_____	IN. W.C.	
Supply Air Static Pressure		_____	IN. W.C.	
Total External Static Pressure (Ignoring +/- from the reading above, add total here)		_____	IN. W.C.	
TEMPERATURES				
Return Air Temperature (Dry bulb / Wet bulb)		_____	DB °F	_____ WB °F
Cooling Supply Air Temperature (Dry bulb / Wet bulb)		_____	DB °F	_____ WB °F
Heating Supply Air Temperature		_____	DB °F	
Delta T (Difference between Supply and Return Temperatures)		_____	DB °F	

Air Handler / Coil - (Inverter Matched)	
INVERTER AH / COIL ONLY	
Check EEV and EEV wiring is secure (no adjustment required)	_____

Additional Checks	
Check wire routings for any rubbing	_____
Check product for proper draining	_____
Check screw tightness on blower wheel	_____
Check factory wiring and wire connections	_____
Check product for proper clearances as noted by installation instructions	_____

°F to °C formula: (°F - 32) divided by 1.8 = °C **°C to °F formula: (°C multiplied by 1.8) + 32 = °F**

THIS PAGE IS LEFT INTENTIONALLY BLANK.

CUSTOMER FEEDBACK
Daikin Comfort Technologies is very interested in all product comments.
Please fill out the feedback form on the following link:
https://daikincomfort.com/contact-us
You can also scan the QR code on the right to be directed to the feedback page.

Our continuing commitment to quality products may mean a change in specifications without notice.

© 2025 ***DAIKIN COMFORT TECHNOLOGIES MANUFACTURING, L.P.***
19001 Kermier Rd, Waller, TX 77484
www.daikincomfort.com