DAIKIN

INSTALLATION INSTRUCTIONS

DV**PTC*14 SERIES AIR HANDLERS

WARNING

ONLY PERSONNEL THAT HAVE BEEN TRAINED TO INSTALL, ADJUST, SERVICE, MAINTENANCE OR REPAIR (HEREINAFTER, "SERVICE") THE EQUIPMENT SPECIFIED IN THIS MANUAL SHOULD SERVICE THE EQUIPMENT.

THIS EQUIPMENT IS NOT INTENDED FOR USE BY PERSONS (INCLUDING CHILDREN) WITH REDUCED PHYSICAL, SENSORY OR MENTAL CAPABILITIES, OR LACK OF EXPERIENCE AND KNOWLEDGE, UNLESS THEY HAVE BEEN GIVEN SUPERVISION OR INSTRUCTION CONCERNING USE OF THE APPLIANCE BY A PERSON RESPONSIBLE FOR THEIR SAFETY.

CHILDREN SHOULD BE SUPERVISED TO ENSURE THAT THEY DO NOT PLAY WITH THE EQUIPMENT.

THE MANUFACTURER WILL NOT BE RESPONSIBLE FOR ANY INJURY OR PROPERTY DAMAGE ARISING FROM IMPROPER SUPERVISION, SERVICE OR SERVICE PROCEDURES. IF YOU SERVICE THIS UNIT, YOU ASSUME RESPONSIBILITY FOR ANY INJURY OR PROPERTY DAMAGE WHICH MAY RESULT. IN ADDITION, IN JURISDICTIONS THAT REQUIRE ONE OR MORE LICENSES TO SERVICE THE EQUIPMENT SPECIFIED IN THIS MANUAL, ONLY LICENSED PERSONNEL SHOULD SERVICE THE EQUIPMENT. IMPROPER SUPERVISION, INSTALLATION, ADJUSTMENT, SERVICING, MAINTENANCE OR REPAIR OF THE EQUIPMENT SPECIFIED IN THIS MANUAL, OR ATTEMPTING TO INSTALL, ADJUST, SERVICE OR REPAIR THE EQUIPMENT SPECIFIED IN THIS MANUAL WITHOUT PROPER SUPERVISION OR TRAINING MAY RESULT IN PRODUCT DAMAGE, PROPERTY DAMAGE, PERSONAL INJURY OR DEATH.

WARNING

DO NOT BYPASS SAFETY DEVICES

Index

1 Important Safety Instructions 2
2 Shipping Inspection 3
2.1 Parts 3
2.2 Handling 3
3 Codes & Regulations 3
4 Replacement Parts 3
5 Pre-Installation Considerations 3
5.1 Preparation 3
5.2 System Matches 3
5.3 Interconnecting Tubing 4
5.4 Clearances 4
5.5 Horizontal Applications 4
5.6 Access 4
6 Installation Location 4
6.1 Upflow and Downflow Installation 5
6.2 Horizontal Left Installation 6
6.3 Horizontal Right Installation 6
7 Refrigerant Lines 8
7.1 Tubing Size 8
7.2 Tubing Preparation 8
7.3 Tubing Connections for TXV Models 9
7.4 Thermal Expansion Valve System Adjustment 9
8 Condensate Drain Lines 10
9 Ductwork 11

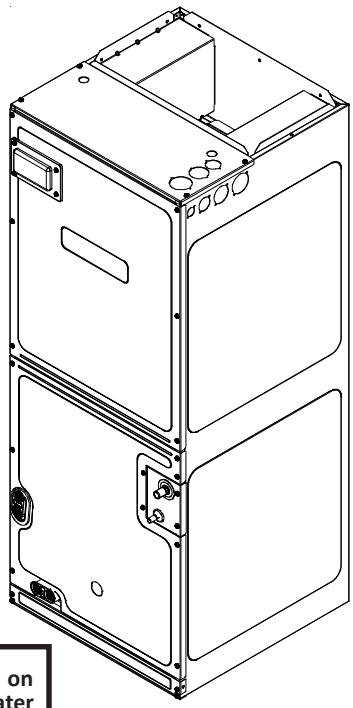

NOTICE

If an "Ec" error is encountered on startup, verify that the electric heater DIP switches have been set to the appropriate heater size. See pages 14-17 for the heater kit airflow delivery and DIP switch settings.

Our continuing commitment to quality products may mean a change in specifications without notice.

© 2014 - 2021, 2023 ***DAIKIN COMFORT TECHNOLOGIES MANUFACTURING, L.P.***

19001 Kermier Road Waller, TX 77484

www.daikincomfort.com

IOD-4021M

06/2023

9.1 Thermal Expansion Valve System Adjustment 11
10 Return Air Filters 11
11 Electric Heat 11
12 Electrical and Control Wiring 12
12.1 Building Electrical Service Inspection 12
12.2 Wire Sizing 12
12.3 Maximum Overcurrent Protection (MOP) 13
12.4 Electrical Connections – Supply Voltage 13
12.4.1 Air Handler Only (Non-Heat Kit Models) 13
12.4.2 Air Handler - Non-Circuit Breaker Heat Kits 13
12.4.3 Air Handler With Circuit Breaker Heat Kit 13
12.5 Low Voltage Connections 13
13 Achieving 1.4% and 2.0% Airflow Low Leakage Rate 13
14 Start-Up Procedure 14
15 Regular Maintenance 14
16 Circulator Blower 16
17 Troubleshooting 19
Index Continued
18 Fully Communicating Daikin System 20
18.1 Overview 20
18.2 Airflow Consideration 20
18.3 Control Wiring 21
18.4 Fully Communicating Daikin System Advanced Features 21
18.5 Diagnostics 21
18.5.1 Network Troubleshooting 21
18.5.2 System Troubleshooting 21
19 Start-Up Procedure 22
20 Regular Maintenance 22
21 Communications Troubleshooting Chart 23
22 Air Handlers Advanced Features Menu 24
22 Diagnostic Codes 25
23 Wiring Diagrams 26

1 Important Safety Instructions

The following symbols and labels are used throughout this manual to indicate immediate or potential safety hazards. It is the owner's and installer's responsibility to read and comply with all safety information and instructions accompanying these symbols. Failure to heed safety information increases the risk of personal injury, property damage, and/or product damage.

ATTENTION
INSTALLING PERSONNEL:

Prior to installation, thoroughly familiarize yourself with this Installation Manual. Observe all safety warnings. During installation or repair, caution is to be observed. It is your responsibility to install the product safely and to educate the customer on its safe use.

WARNING

HIGH VOLTAGE!
Disconnect ALL power before servicing or installing this unit. Multiple power sources may be present. Failure to do so may cause property damage, personal injury or death.

WARNING

This product is factory-shipped for use with 208/240/1/60 electrical power supply. DO NOT reconfigure this air handler to operate with any other power supply.

WARNING

To avoid property damage, personal injury or death due to electrical shock, this unit MUST have an uninterrupted, unbroken electrical ground. The electrical ground circuit may consist of an appropriately sized electrical wire connecting the ground lug in the unit control box to the building electrical service panel.
Other methods of grounding are permitted if performed in accordance with the National Electric Code (NEC)/American National Standards Institute (ANSI)/National Fire Protection Association (NFPA) 70 and local/state codes. In Canada, electrical grounding is to be in accordance with the Canadian Electric Code (CSA) C22.1.

CAUTION

When installing or servicing this equipment, safety clothing, including hand and eye protection, is strongly recommended. If installing in an area that has special safety requirements (hard hats, etc.), observe these requirements.

WARNING

To prevent the risk of property damage, personal injury, or death, do not store combustible materials or use gasoline or other flammable liquids or vapors in the vicinity of this unit.

DANGER
PELIGRO

CARBON MONOXIDE POISONING HAZARD

Special Warning for Installation of Furnace or Air Handling Units in Enclosed Areas such as Garages, Utility Rooms or Parking Areas

Carbon monoxide producing devices (such as an automobile, space heater, gas water heater, etc.) should not be operated in enclosed areas such as unventilated garages, utility rooms or parking areas because of the danger of carbon monoxide (CO) poisoning resulting from the exhaust emissions. If a furnace or air handler is installed in an enclosed area such as a garage, utility room or parking area and a carbon monoxide producing device is operated therein, there must be adequate, direct outside ventilation.

This ventilation is necessary to avoid the danger of CO poisoning which can occur if a carbon monoxide producing device continues to operate in the enclosed area. Carbon monoxide emissions can be (re)circulated throughout the structure if the furnace or air handler is operating in any mode.

CO can cause serious illness including permanent brain damage or death. B10259-216

RIESGO DE INTOXICACIÓN POR MONÓXIDO DE CARBONO

Advertencia especial para la instalación de calentadores ó manejadoras de aire en áreas cerradas como estacionamientos ó cuartos de servicio.

Los equipos ó aparatos que producen monóxido de carbono (tal como automóvil, calentador de gas, calentador de agua por medio de gas, etc) no deben ser operados en áreas cerradas debido al riesgo de envenenamiento por monóxido de carbono (CO) que resulta de las emisiones de gases de combustión. Si el equipo ó aparato se opera en dichas áreas, debe existir una adecuada ventilación directa al exterior.

Esta ventilación es necesaria para evitar el peligro de envenenamiento por CO, que puede ocurrir si un dispositivo que produce monóxido de carbono sigue operando en el lugar cerrado.

Las emisiones de monóxido de carbono pueden circular a través del aparato cuando se opera en cualquier modo.

El monóxido de carbono puede causar enfermedades severas como daño cerebral permanente ó muerte. B10259-216

RISQUE D'EMPOISONNEMENT AU MONOXYDE DE CARBONE

Avertissement special au sujet de l'installation d'appareils de chauffage ou de traitement d'air dans des endroits clos, tets les garages, les locaux d'entretien et les stationnements.

Evitez de mettre en marche les appareils produisant du monoxyde de carbone (tels que les automobile, les appareils de chauffage autonome,etc.) dans des endroits non ventilés tels que les d'empoisonnement au monoxyde de carbone. Si vous devez faire fonctionner ces appareils dans un endroit clos, assures-vous qu'il y ait une ventilation directe provenant de l'exterier.

Cette ventilation est nécessaire pour éviter le danger d'intoxication au CO pouvant survenir si un appareil produisant du monoxyde de carbone continue de fonctionner au sein de la zone confinée.

Les émissions de monoxyde de carbone peuvent etre recircules dans les endroits clos, si l'appareil de chauffage ou de traitement d'air sont en marche.

Le monoxyde de carbone peut causer des maladies graves telles que des dommages permanents au cerveau et meme la mort. B10259-216

2 Shipping Inspection

Always transport the unit upright; laying the unit on its side or top during transit may cause equipment damage. The installer should inspect the product upon receipt for shipping damage and subsequent investigation is the responsibility of the carrier. The installer must verify the model number, specifications, electrical characteristics, and accessories are correct prior to installation. The distributor or manufacturer will not accept claims from dealers for transportation damage or installation of incorrectly shipped units.

2.1 Parts

Also inspect the unit to verify all required components are present and intact. Report any missing components immediately to Daikin or to the distributor. Use only factory authorized replacement parts (see Section 5). Make sure to include the full product model number and serial number when reporting and/or obtaining service parts.

2.2 Handling

Use caution when transporting/carrying the unit. Do not move unit using shipping straps. Do not carry unit with hooks or sharp objects. The preferred method of carrying the unit after arrival at the job site is to carry via a two-wheel hand truck from the back or sides or via hand by carrying at the cabinet corners.

3 Codes & Regulations

This product is designed and manufactured to comply with applicable national codes. Installation in accordance with such codes and/or prevailing local codes/regulations is the responsibility of the installer. The manufacturer assumes no responsibility for equipment installed in violation of any codes or regulations.

The United States Environmental Protection Agency (EPA) has issued various regulations regarding the introduction and disposal of refrigerants. Failure to follow these regulations may harm the environment and can lead to the imposition of substantial fines. Should you have any questions please contact the local office of the EPA and/or refer to EPA's website www.epa.gov.

4 Replacement Parts

When reporting shortages or damages, or ordering repair parts, give the complete product model and serial numbers as stamped on the product. Replacement parts for this product are available through your contractor or local distributor. For the location of your nearest distributor consult the white business pages, the yellow page section of the local telephone book or contact:

HOMEOWNER SUPPORT
DAIKIN NORTH AMERICA LLC
19001 KERMIER ROAD • WALLER, TEXAS 77484
855-770-5678

5 Pre-Installation Considerations

5.1 Preparation

Keep this document with the unit. Carefully read all instructions for the installation prior to installing product. Make sure each step or procedure is understood and any special considerations are taken into account before starting installation. Assemble all tools, hardware and supplies needed to complete the installation. Some items may need to be purchased locally. Make sure everything needed to install the product is on hand before starting.

5.2 System Matches

The entire system (combination of indoor and outdoor sections) must be manufacturer approved and Air-Conditioning, Heating, and Refrigeration Institute (AHRI) listed. NOTE: Installation of unmatched systems is not permitted. Damage or repairs due to installation of unmatched systems is not covered under the warranty.

5.3 Interconnecting Tubing

Give special consideration to minimize the length of refrigerant tubing when installing air handlers. Refer to Remote Cooling/ Heat Pump Service Manual RS6200006, and TP-107 Long Line Set Application R-410A for tubing guidelines. If possible, allow adequate length of tubing such that the coil may be removed (for inspection or cleaning services) from the cabinet without disconnecting the tubing.

5.4 Clearances

The unit clearance from a combustible surface may be 0”. However, service clearance must take precedence. A minimum of 24” in front of the unit for service clearance is required. Additional clearance on one side or top will be required for electrical wiring connections. Consult all appropriate regulatory codes prior to determining final clearances. When installing this unit in an area that may become wet (such as crawl spaces), elevate the unit with a sturdy, non-porous material. In installations that may lead to physical damage (i.e. a garage) it is advised to install a protective barrier to prevent such damage. Always install units such that a positive slope in condensate line (1/4” per foot) is allowed.

5.5 Horizontal Applications

If installed above a finished living space, a secondary drain pan (as required by many building codes), must be installed under the entire unit and its condensate drain line must be routed to a location such that the user will see the condensate discharge.

5.6 Access

This unit should be installed in a manner so that it is **NOT** accessible to the public.

6 Installation Location

NOTE: These air handlers are designed for indoor installation only at a max altitude of 10,500 feet above sea level or a min altitude of -184 feet below sea level.

If the unit is located in an unconditioned area with high ambient temperature and/or high humidity, the air handler may be subject to nuisance sweating of the casing. On these installations, a wrap of 2” fiberglass insulation with a vapor barrier is recommended. A secondary drain pan below the unit is also recommended to protect the installation site.

This product line may be installed in one of the upflow, downflow, horizontal left or horizontal right orientations as shown in Figures 2, 3, 4 and 5. The unit may be installed in horizontal left orientation as shipped (refer to specific sections for more information).

NOTE: When installing the air handler in the horizontal right position in high temperature/high humidity conditions it is recommended to relocate the PCB 90 degrees and attach to blower deck or top plate if heat kit is installed. See instructions below to relocate the PCB.

1. Remove the mounting screws on the side of the PCB and the screw on the bottom side attaching bracket to the blower deck. (Figure 1.) NOTE: Remove top plate for easier access to screw behind board.

Figure 1.

2. Cut the wire tie to allow excess wire to rotate the PCB. (Figure 2.)

Figure 2.

3. Rotate 90 degrees and attach to blower deck. Using two self-tapping screws. (Figure 3.)

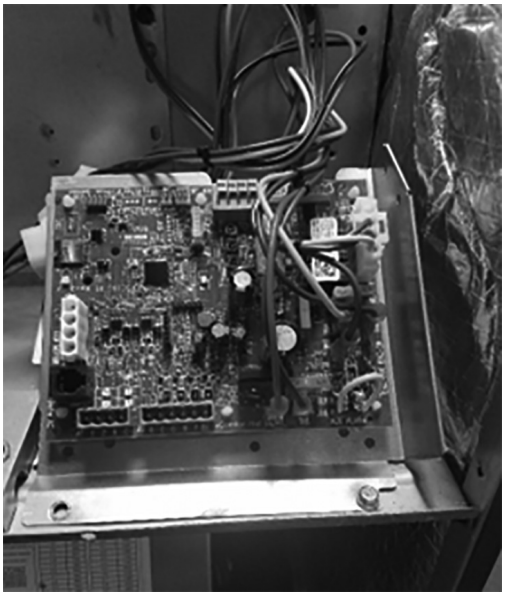

Figure 3.

4. Bundle excess wire using wire tie.
5. Make sure to check all wing connections are secure and tight.

AVPTC with heat kit installed or AVPEC air handler.

1. Follow steps 1 and 2 above.
2. Rotate 90 degrees up and attach to top plate. Using two self-tapping screws.

Figure 4.

3. Bundle excess wire using wire tie.
4. Make sure to check all wing connections are secure and tight.

6.1 Upflow and Downflow Installation (Figure 2 & 3)

1. Remove blower access panel and coil access panel. The coil access panel and tubing panel may remain screwed together during this procedure. Remove and retain the seven (7) screws securing the coil access panel to the cabinet and the six (6) screws securing the blower access panel to the cabinet.
2. Slide the coil assembly out from the cabinet. Use the drain pan to pull the assembly from the cabinet.

IMPORTANT: Do not use manifolds, copper lines, or the flowrator to pull the coil assembly out. Failure to do so may result in braze joint damage and leaks.

3. Removal of the center support is required on units with 21” wide cabinet. Remove and retain the two (2) screws that secure the center support to the cabinet. Remove the center support.
4. The horizontal drip shield, side drain pan, and drain pan extension must be removed. Follow the “Side Drain Pan and Extension Removal Instructions“.
5. **For Upflow Installation:**

   a. Using the drain pan to hold the coil assembly, slide the coil assembly back into the cabinet.

   b. Reinstall the center support (if removed) using the two (2) screws removed in Step 3.

   c. Reinstall the coil access panels and reinstall blower access panel removed in Step 1 as shown in Figure 8.

6. **For Downflow Installation:**

   a. Position the unit in the downflow position.

   b. Using the drain pan to hold the coil assembly, slide the coil assembly back into the cabinet on the downflow brackets as shown in Figure 12.

   c. Reinstall the center support (if removed) using the two (2) screws removed in Step 3.

   d. Reinstall the coil access panels and reinstall blower access panel removed in Step 1 as shown in Figure 13.

Side Drain Pan and Extension Removal Instuctions

Refer to Figure 1, remove the two (2) screws that secure the drip shield support brackets to the condensate collectors (front and back). Unsnap the side drain pan from the bottom drain pan using a screwdriver or any small lever. The side drain pan, drip shield brackets and the drain pan extension may now be removed. From Figure 1, drain port labeled (A) is the primary drain for this application and condensate drain line must be attached to this drain port. Drain port (a) is for the secondary drain line (if used). When the side drain pan is removed, the drain port opening in the access panel must be covered by the accessory drain port plug (DPK1) as shown in Figure 1-1.

DRAIN PORT PLUG		
Kit Number	**Description**	**Application**
DPK1	Side Drain Port Plug	All Models

DRAIN PORT PLUG KIT

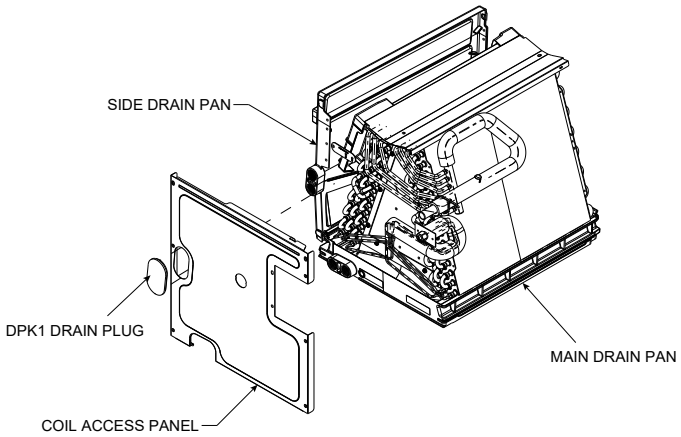

DRAIN PAN

Figure 5.1

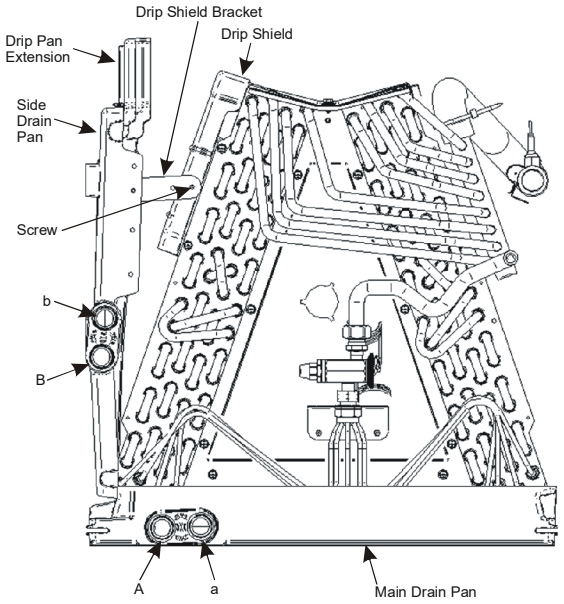

SIDE DRAIN PAN REMOVAL

Figure 5

6.2 Horizontal Left Installation (Figure 8)

No field modifications are permissible for this application. Install unit as shown in Figure 8.

Drain port labeled (B) in Figure 1 is the primary drain for this application and condensate drain line must be attached to this drain port. Drain port (b) is for the secondary drain line (if used).

Remove red plugs from side drain pan before connecting condensate drain pipes. Use removed plug to close drain ports on vertical drain pan.

CMK0008 Condensate Kit	CMK0009 Condensate Kit	CMK0010 Condensate Kit	CMK0012 Condensate Kit	CMK0013 Condensate Kit
DV25PTCB14	DV29PTCB14	DV31PTCC14	DV49PTCD14	DV33PTCC14
	DV37PTCB14	DV37PTCC14	DV61PTCD14	DV39PTCC14
		DV37PTCD14		
		DV49PTCC14		
		DV59PTCC14		
		DV59PTCD14		

Condensate Kit

Table 1

6.3 Horizontal Right Installation (Figure 9)

1. Before inverting the air handler, remove blower access panel and coil access panel. The coil access panel and tubing panel may remain screwed together during this procedure. Remove and retain the seven (7) screws securing the coil access panel to the cabinet and the six (6) screws securing the blower access panel to the cabinet.
2. Slide the coil assembly out from the cabinet. Use the drain pan to pull the assembly from the cabinet.

NOTE: Do not use manifolds, copper lines, or the flowrator to pull the coil assembly out. Failure to do so may result in braze joint damage and leaks.

3. Removal of the center support is required on units with 21” wide cabinet. Remove and retain the two (2) screws that secure the center support to the cabinet. Remove the center support.

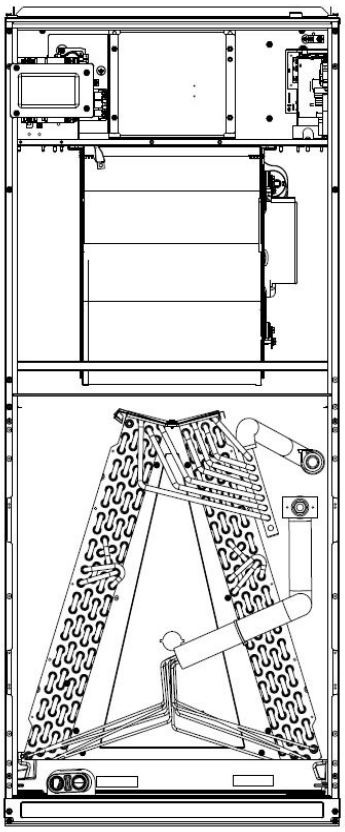

UPFLOW
Figure 6

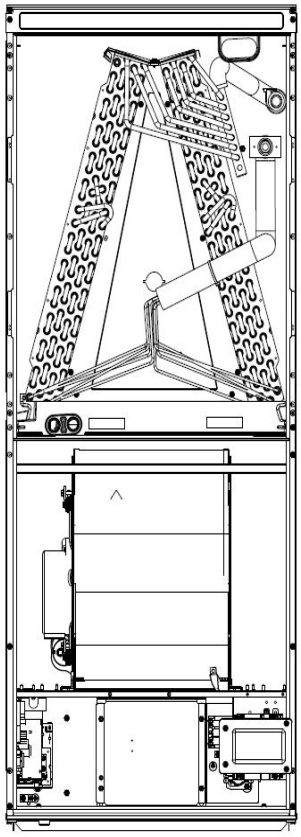

DOWNFLOW
Figure 7

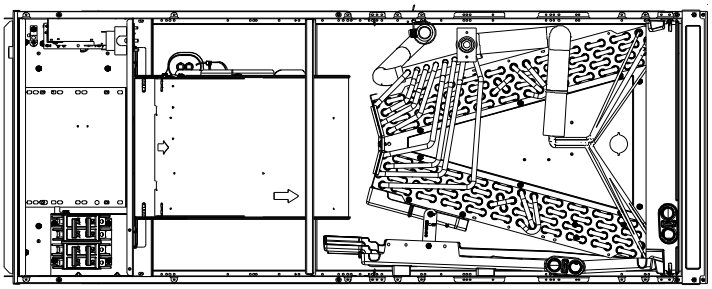

HORIZONTAL LEFT
Figure 8

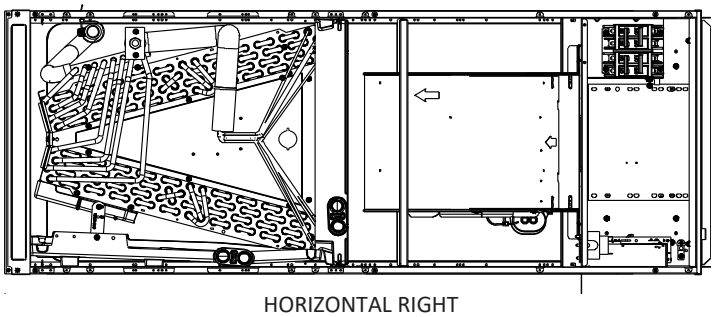

HORIZONTAL RIGHT
Figure 9

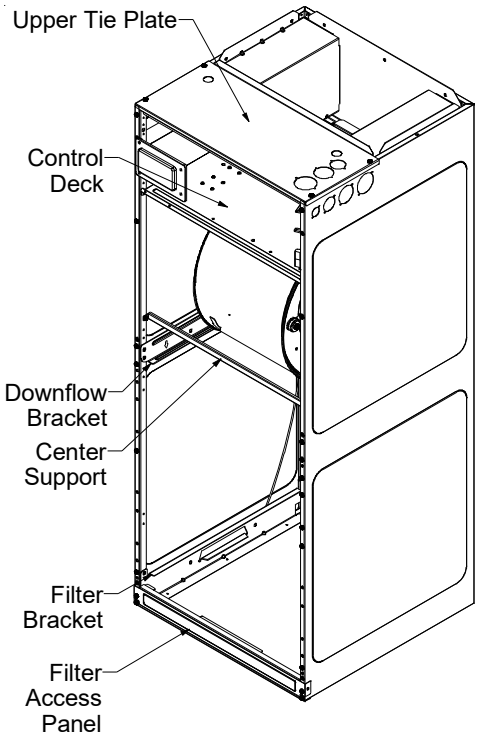

INTERNAL PART TERMINOLOGY
Figure 10

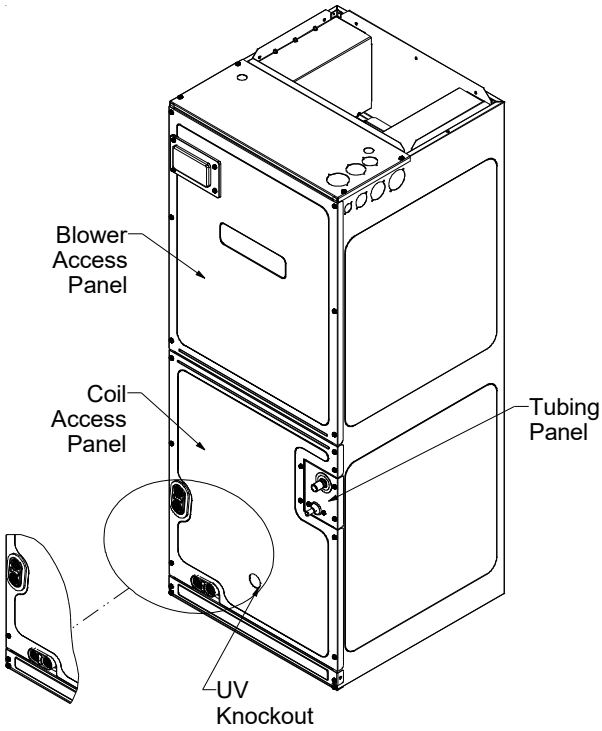

EXTERNAL PART TERMINOLOGY
Figure 11

NOTE: If removing only the coil access panel from the unit, the filter access panel must be removed first. Failure to do so may result in panel damage.

4. Position the unit in the downflow position.

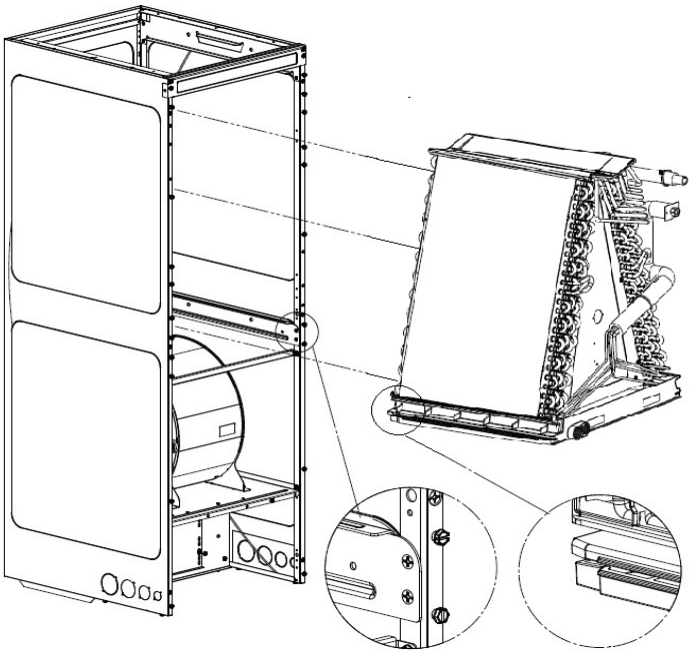

COIL INSTALLATION FOR DOWNFLOW

Figure 12

5. Remove side drain pan extension if present.
6. Using the drain pan to hold the coil assembly, slide the coil assembly back into the cabinet on the downflow brackets as shown in Figure 11.

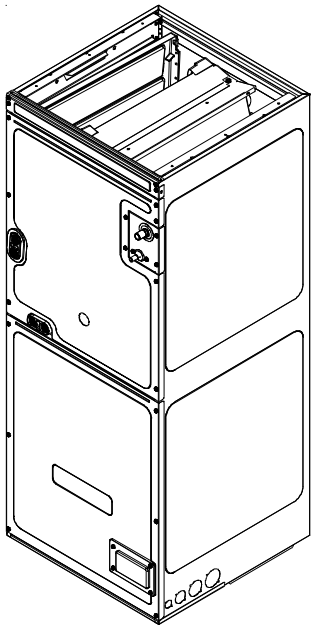

ACCESS PANEL CONFIGURATION FOR DOWNFLOW OR HORIZONTAL RIGHT

Figure 13

7. Reinstall the center support (if removed) using the two (2) screws removed in Step 5.
8. Reinstall the coil access panels and reinstall blower access panel removed in Step 1.
9. Drain Connections for Horizontal Right Installation

   a. Drain port labeled (B) in Figure 1 is the primary drain for this application and condensate drain line must be attached to this drain port. Drain port (b) is for the secondary drain line (if used).

   b. Remove red plugs from side drain pan before connecting condensate drain pipes. Use removed plug to close drain ports on vertical drain pan.

MODEL LIST FOR DOWNFLOW KITS

DFK-B Downflow Kit	DFK-C Downflow Kit	DFK-D Downflow Kit
DV25PTCB14**	DV31PTCC14**	DV37PTCD14**
DV29PTCB14**	DV37PTCC14**	DV49PTCD14**
DV35PTCB14**	DV59PTCC14**	DV59PTCD14**
DV37PTCB14**	DV33PTCC14**	DV61PTCD14**
	DV39PTCC14**	
	DV49PTCC14**	

Downflow Kit

Table 2

7 Refrigerant Lines

WARNING

This product is factory-shipped with R410A and dry nitrogen mixture gas under pressure. Use appropriate service tools and follow these instructions to prevent injury.

WARNING

A quenching cloth is strongly recommended to prevent scorching or marring of the equipment finish when brazing close to the painted surfaces. Use brazing alloy of 5% minimum silver content.

CAUTION

Applying too much heat to any tube can melt the tube. Torch heat required to braze tubes of various sizes must be proportional to the size of the tube. Service personnel must use the appropriate heat level for the size of the tube being brazed.

NOTE: Refrigerant tubing must be routed to allow adequate access for servicing and maintenance of the unit.

Do not install the air handler in a location that violates the instructions provided with the condenser. If the unit is located in an unconditioned area with high ambient temperature and/or high humidity, the air handler may be subject to nuisance sweating of the casing. On these installations, a wrap of 2” fiberglass insulation with a vapor barrier is recommended.

7.1 Tubing Size

For the correct tubing size, follow the specification for the condenser/heat pump.

7.2 Tubing Preparation

All cut ends are to be round, burr free, and clean. Failure to follow this practice increases the chances for refrigerant leaks. The suction line is spun closed and requires tubing cutters to remove the closed end.

NOTE: To prevent possible damage to the tubing joints, do not handle coil assembly with manifold or flowrator tubes. Always use clean gloves when handling coil assemblies.

NOTE: The use of a heat shield is strongly recommended when brazing to avoid burning the serial plate or the finish of the unit. Heat trap or wet rags must be used to protect heat sensitive components such as service valves and TXV valves sensing bulb.

7.3 Tubing Connections for TXV Models

TXV models come with factory installed TXV with the bulb pre-installed on the vapor tube.

1. Remove refrigerant tubing panel or coil (lower) access panel.
2. Remove access valve fitting cap and depress the valve stem in access fitting to release pressure. No pressure indicates possible leak.
3. Replace the refrigerant tubing panel.
4. Remove the spin closure on both the liquid and suction tubes using a tubing cutter.
5. Insert liquid line set into liquid tube expansion and slide grommet about 18” away from braze joint.
6. Insert suction line set into suction tube expansion and slide insulation and grommet about 18” away from braze joint.
7. Braze joints. Quench all brazed joints with water or a wet rag upon completion of brazing.

NOTE: The sensing bulb must be permanently located. A heat shield, heat trap, or wet rag must be used during brazing to prevent damage to the TXV valve.

8. Replace access panels, suction line grommet, insulation and all screws.

7.4 Thermal Expansion Valve System Adjustment

The following information for the indoor unit should be verified before attempting to charge system or adjust TXV if necessary.

1. Total static pressure is .5” WC or less.
2. Airflow is correct for installed unit.
3. Airflow tables are in the installation manual and Spec Sheet for Indoor Unit.
4. Complete airflow tables and charging information are in Service Manual RS6200006
5. The outdoor temperature must be 60°F or higher.
6. Set the room thermostat to COOL, fan switch to AUTO
7. Set the temperature control well below room temperature.

Superheat adjustments should not be made until indoor ambient conditions have stabilized. This could take up to 24 hours depending on indoor temperature and humidity. Before checking superheat run the unit in cooling for 10 minutes or until refrigerant pressures stabilize. Use the following guidelines and methods to check unit operation and ensure that the refrigerant charge is within limits. NOTE: Charge two stage units on low stage.

1. Purge gauge lines. Connect service gauge manifold to base-valve service ports.
2. Temporarily install a thermometer on the liquid line at the liquid line service valve and 4-6” from the compressor on the suction line. Ensure the thermometer makes adequate contact and is insulated for best possible readings. Use liquid line temperature to determine subcooling and vapor temperature to determine superheat.
3. Check subcooling and superheat. The system should have a subcooling of 8°F +/- 1°F and two-stage compressor systems should have a Subcooling of 6°F +/- 1°F. and superheat of 8°F +/- 1°F. If subcooling and superheat are low, adjust TXV to 8°F +/- 1°F superheat, then check subcooling.

   a. If subcooling is low and superheat is high, add charge to raise subcooling to 8°F +/- 1°F. Two-stage compressor systems should have a Subcooling of 6°F +/- 1°F then check superheat.
   b. If subcooling and superheat are high, adjust TXV valve to 8°F +/- 1°F superheat, then check subcooling.

Superheat Adjustments (Only if necessary)

1. Attach a pipe clamp thermometer near the suction line service valve at the outdoor unit.

a. Ensure the thermometer makes adequate contact for the best possible readings.

2. TXV-based systems should have a Superheat value of 8°F +/- 1°F.
3. Adjust Superheat by turning the TXV valve stem clockwise to increase and counterclockwise to decrease. Adjustments should be made opening or closing the valve by no more than ¼ turn at a time. Allow the system to stabilize 15 to 20 minutes before making additional adjustments if necessary.
4. After adjustments are complete replace cap on adjustment stem and tighten 1/6 turn.
5. Remove gauges and check the Schrader ports for leaks and tighten valve cores if necessary. Install caps finger tight.

NOTE: In situations where the TXV must be removed and replaced or re-installed into the system, the TXV should be hand tightened first and then apply a half turn to fully set the TXV. No more than 20 ft-lb torque should be applied to the joints of the TXV.

SATURATED SUCTION PRESSURE TEMPERATURE CHART	
SUCTION PRESSURE	SATURATED SUCTION
PSIG	R-410A
50	1
52	3
54	4
56	6
58	7
60	8
62	10
64	11
66	13
68	14
70	15
72	16
74	17
76	19
78	20
80	21
85	24
90	26
95	29
100	31
110	36
120	41
130	45
140	49
150	53
160	56
170	60

Table 5

SUBCOOL FORMULA =
SAT. LIQUID LINE TEMP. - LIQUID LINE TEMP.
SUPERHEAT FORMULA =
SUCT. LINE TEMP. - SAT. SUCT. TEMP.

SATURATED LIQUID PRESSURE TEMPERATURE CHART	
LIQUID PRESSURE	SATURATED LIQUID TEMPERATURE °F
PSIG	R-410A
200	70
210	73
220	76
225	78
235	80
245	83
255	85
265	88
275	90
285	92
295	95
305	97
325	101
355	108
375	112
405	118
415	119
425	121
435	123
445	125
475	130
500	134
525	138
550	142
575	145
600	149
625	152

Table 6

8 Condensate Drain Lines

The coil drain pan has a primary and a secondary drain with 3/4” NPT female connections. The connectors required are 3/4” NPT male, either PVC or metal pipe, and should be hand tightened to a torque of no more than 37 in-lbs. to prevent damage to the drain pan connection. An insertion depth of approximately 3/8” to 1/2” (3-5 turns) should be expected at this torque.

1. Ensure drain pan hole is not obstructed.
2. To prevent potential sweating and dripping on to finished space, it may be necessary to insulate the condensate drain line located inside the building. Use Armaflex® or similar material.

A secondary condensate drain connection has been provided for areas where the building codes require it. Pitch all drain lines a minimum of 1/4” per foot to provide free drainage. Provide required support to the drain line to prevent bowing. If the secondary drain line is required, run the line separately from the primary drain and end it where condensate discharge can be easily seen.

NOTE: Water coming from secondary line means the coil primary drain is plugged and needs immediate attention.

CAUTION

If secondary drain is not installed, the secondary access must be plugged.

Insulate drain lines located inside the building or above a finished living space to prevent sweating. Install a condensate trap to ensure proper drainage.

NOTE: When units are installed above ceilings, or in other locations where damage from condensate overflow may occur, it is MANDATORY to install a field fabricated auxiliary drain pan under the coil cabinet enclosure.

The installation must include a “P” style trap that is located as close as is practical to the evaporator coil. See Figure 12 for details of a typical condensate line “P” trap.

NOTE: Units operating in high static pressure applications may require a deeper field constructed “P” style trap than is shown in Figure 10 to allow proper drainage and prevent condensate overflow.

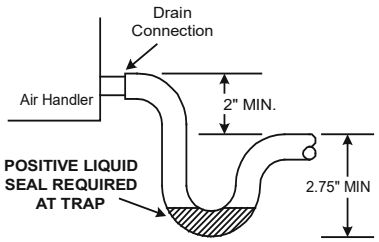

Figure 14

NOTE: Trapped lines are required by many local codes. In the absence of any prevailing local codes, please refer to the requirements listed in the Uniform Mechanical Building Code.

A drain trap in a draw-through application prevents air from being drawn back through the drain line during fan operation thus preventing condensate from draining, and if connected to a sewer line to prevent sewer gases from being drawn into the airstream during blower operation.

Use of a condensate removal pump is permitted when necessary. This condensate pump should have provisions for shutting off the control voltage should a blocked drain occur. A trap must be installed between the unit and the condensate pump.

IMPORTANT NOTE: The evaporator coil is fabricated with oils that may dissolve styrofoam and certain types of plastics. Therefore, a removal pump or float switch must not contain any of these materials.

9 Ductwork

This air handler is designed for a complete supply and return ductwork system.

To ensure correct system performance, the ductwork is to be sized to accommodate 350-450 CFM per ton of cooling with the static pressure not to exceed 0.5” in w.c. Refer to ACCA Manual D, Manual S and Manual RS for information on duct sizing and application. Flame retardant ductwork is to be used and sealed to the unit in a manner that will prevent leakage.

NOTE: A downflow application with electric heat must have an L-shaped sheet metal supply duct without any outlets or registers located directly below the heater.

9.1 Return Ductwork

DO NOT LOCATE THE RETURN DUCTWORK IN AN AREA THAT CAN INTRODUCE TOXIC, OR OBJECTIONABLE FUMES/ODORS INTO THE DUCTWORK. The return ductwork is to be connected to the air handler bottom (upflow configuration).

10 Return Air Filters

CAUTION

Do not operate this product without all the ductwork attached.

Each installation must include a return air filter. This filtering may be performed at the air handler using the factory filter rails or externally such as a return air filter grille. When using the factory filter rails, a nominal 16x20x1”, 20x20x1” or 24x20x1” (actual dimension must be less than 23-½”x20”) filter can be installed on a B, C and D cabinet respectively (the cabinet size is the seventh letter of the model number).

11 Electric Heat

Refer to the installation manual provided with the electric heat kit for the correct installation procedure. All electric heat must be field installed. If installing this option, the ONLY heat kits that are permitted to be used are the HKS series. Refer to the air handler unit’s Serial and Rating plate or the HKS specification sheets to determine the heat kits compatible with a given air handler. No other accessory heat kit besides the HKS series may be installed in these air handlers.

The heating mode temperature rise is dependent upon the system airflow, the supply voltage, and the heat kit size (kW) selected. Use data provided in Tables 4, 5 and 6 to determine the temperature rise (°F).

NOTE: For installations not indicated above the following formula is to be used:

TR = (kW x 3412) x (Voltage Correction) / (1.08 x CFM)

Where:	TR	=	Temperature Rise
	kW	=	Heater Kit Actual kW
	kW	=	Heater Kit Actual kW
	3412	=	Btu per kW
	VC*	=	.96 (230 Supply Volts)
		=	.92 (220 Supply Volts)
		=	.87 (208 Supply Volts)
	1.08	=	Constant
	CFM	=	Measured Airflow

*VC (Voltage Correction)

NOTE: The Temperature Rise Tables can also be used to estimate the air handler airflow delivery. When using these tables for this purpose set the room thermostat to maximum heat and allow the system to reach steady state conditions. Insert two thermometers, one in the return air and one in the supply air. The temperature rise is the supply air temperature minus the return air temperature. Using the temperature rise calculated, CFM can be estimated from the TR formula above. See Technical Manual and/or Service Manual for more information.

CFM	HEAT KIT NOMINAL kW							
	3	5	6	8	10	15	19/20	25
800	12	19	23	31	37	56		
1000	9	15	19	25	30	44		
1200	8	12	15	21	25	37	49	62
1400	7	11	13	18	21	32	42	53
1600	6	9	12	15	19	28	37	46
1800	5	8	10	14	16	25	33	41
2000	5	7	9	12	15	22	30	37

230/1/60 SUPPLY VOLTAGE - TEMP. RISE °F

Table 3

CFM	HEAT KIT NOMINAL kW							
	3	5	6	8	10	15	19/20	25
800	11	18	22	30	35	54		
1000	9	14	18	24	28	42		
1200	7	12	15	20	24	35	47	59
1400	6	10	13	17	20	30	40	51
1600	6	9	11	15	18	27	35	44
1800	5	8	10	13	16	24	31	39
2000	4	7	9	12	14	21	28	35

220/1/60 SUPPLY VOLTAGE - TEMP. RISE °F

Table 4

CFM	HEAT KIT NOMINAL kW							
	3	5	6	8	10	15	19/20	25
800	10	17	21	28	33	52		
1000	8	13	17	22	27	40		
1200	7	11	14	19	22	33	45	56
1400	6	10	12	16	19	29	38	48
1600	5	8	10	14	17	25	33	42
1800	5	7	9	12	15	22	30	37
2000	4	7	8	11	13	20	27	33

208/1/60 SUPPLY VOLTAGE - TEMP. RISE °F

Table 5

Model	Heater (kW)								
	3	5	6	8	10	15	19	20	25
DV25PTCB14	550	650	700	800	850	875			
DV29PTCB14	550	650	700	800	875	875			
DV35PTCB14	550	650	700	800	875	1050			
DV37PTCB14	550	650	700	800	875	1050			
DV33PTCC14	600	700	750	850	920	950			
DV39PTCC14		700	770	880	970	1090	1280		
DV49PTCC14		800	800	950	1090	1290	1345		
DV31PTCC14	600	700	770	880	970	1090	1280		
DV37PTCC14		700	770	880	970	1090	1280		
DV59PTCC14		800	800	950	1090	1290	1345		
DV37PTCD14		870	970	1060	1120	1220		1250	
DV59PTCD14		990	1110	1200	1240	1520		1520	
DV49PTCD14		950	1060	1150	1220	1520			
DV61PTCD14		1030	1150	1250	1320	1650		1690	1750

MINIMUM CFM REQUIRED FOR HEATER KITS

Please refer to page 16 for specific heater kit application guidelines.

MINIMUM CFM REQUIRED FOR HEATER KITS

Table 6

*Please refer to page 16 for specific heater kit application guidelines.

12 Electrical and Control Wiring

IMPORTANT: All routing of electrical wiring must be made through provided electrical knockouts. Do not cut, puncture or alter the cabinet for electrical wiring.

12.1 Building Electrical Service Inspection

This unit is designed for single-phase electrical supply only. DO NOT OPERATE ON A THREE-PHASE POWER SUPPLY. Measure the power supply to the unit. The supply voltage must be measured and be in agreement with the unit nameplate power requirements and within the range shown.

Nominal Input	Minimum Voltage	Maximum Voltage
208 - 240	197	253

ELECTRICAL VOLTAGE

Table 7

12.2 Wire Sizing

Wire size is important to the operation of your equipment. Use the following check list when selecting the appropriate wire size for your unit.

CAUTION

FIRE HAZARD!
To avoid the risk of property damage, personal injury or fire, use only copper conductors.

WARNING

HIGH VOLTAGE!
Disconnect ALL power before servicing.
Multiple power sources may be present.
Failure to do so may cause property damage, personal injury or death.

WARNING

HIGH VOLTAGE!
To avoid property damage, personal injury or death due to electrical shock, this unit MUST have an uninterrupted, unbroken electrical ground. The electrical ground circuit may consist of an appropriately sized electrical wire connecting the ground lug in the unit control box to the building electrical service panel.
Other methods of grounding are permitted if performed in accordance with the National Electric Code (NEC)/American National Standards Institute (ANSI)/National Fire Protection Association (NFPA) 70 and local/state codes. In Canada, electrical grounding is to be in accordance with the Canadian Electric Code (CSA) C22.1.

- Wire used must carry the Minimum Circuit Ampacity (MCA) listed on the unit's Series and Rating Plate.
- Refer to the NEC (USA) or CSA (Canada) for wire sizing. The unit MCA for the air handler and the optional electric heat kit can be found on the unit Series and Rating Plate.
- Wire must be sized to allow no more than a 2% voltage drop from the building breaker/fuse panel to the unit.
- Wires with different insulation temperature rating have varying ampacities - be sure to check the temperature rating used.

  Refer to the latest edition of the National Electric Code or in Canada the Canadian Electric Code when determining the correct wire size.

12.3 Maximum Overcurrent Protection (MOP)

Every installation must include an NEC (USA) or CEC (Canada) approved overcurrent protection device. Also, check with local or state codes for any special regional requirements.

Protection can be in the form of fusing or HACR style circuit breakers. The Series and Rating Plate provides the maximum overcurrent device permissible.

NOTE: Fuses or circuit breakers are to be sized larger than the equipment MCA but not to exceed the MOP.

12.4 Electrical Connections – Supply Voltage

IMPORTANT NOTE: USE COPPER CONDUCTORS ONLY.

Knockouts are provided on the air handler top panel and sides of the cabinet to allow for the entry of the supply voltage conductors, as shown in Figure 11. If the knockouts on the cabinet sides are used for electrical conduit, an adapter ring must be used in order to meet UL1995 safety requirements. An NEC or CEC approved strain relief is to be used at this entry point. Some codes/municipalities require the supply wire to be enclosed in conduit. Consult your local codes.

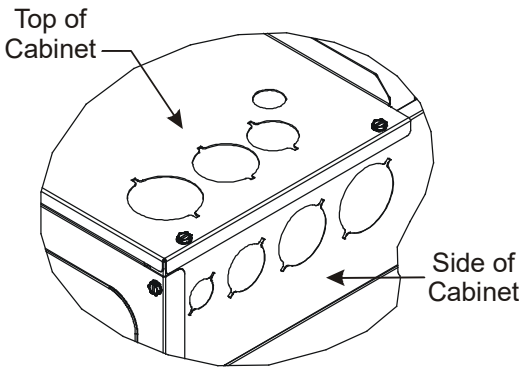

KNOCK-OUT FOR ELECTRICAL CONNECTIONS

Figure 15

12.4.1 Air Handler Only (Non-Heat Kit Models)

The power supply connects to the stripped black and red wires contained in the air handler electrical compartment. Attach the supply wires to the air handler conductors as shown in the unit wiring diagram using appropriately sized solderless connectors or other NEC or CEC approved means. A ground lug is also provided in the electrical compartment. The ground wire from the power supply must be connected to this ground lug.

12.4.2 Air Handler - Non-Circuit Breaker Heat Kits

A terminal block is provided with the HKS kit to attach the power supply and air handler connections. Follow the HKS Installation Manual and wiring diagram for complete wiring details.

12.4.3 Air Handler With Circuit Breaker Heat Kit

The air handler has a soft plastic cover on the upper access panel and can be removed to allow the heater kit circuit breaker to be installed. The circuit breakers have lugs for power supply connection. See the HKS Installation Instructions for further details.

12.5 Low Voltage Connections

Several combinations of low voltage schemes are possible, depending on the presence of a heat kit and whether the heat kit is single-stage or multi-stage, whether the outdoor section is an air conditioner or heat pump, and whether the system is setup with a communicating or traditional thermostat. The 24V-control voltage connects the air handler to the room thermostat and condenser. Low voltage wiring must be copper conductors. A minimum of 18 AWG wire must be used in installations up to 100'. Low voltage wiring must be connected through the top of the cabinet or either side. See the "Thermostat Wiring" section of this manual for typical low voltage wiring connections.

13 Achieving 1.4% and 2.0% Airflow Low Leakage Rate

Ensure all the gaskets remain intact on all surfaces as shipped with the unit. These surfaces are areas between the upper tie plate and coil access panel, blower access and coil access panels, and between the coil access and filter access panels. Ensure upon installation, that the plastic breaker cover is sitting flush on the blower access panel and all access panels are flush with each other and the cabinet. With these requirements satisfied, the unit achieves less than 1.4% airflow leakage at 0.5 inch wc static pressure and less than 2% airflow leakage a 1inch wc static pressure when tested in accordance with ASHRAE Standard 193.

14 Start-Up Procedure

WARNING

HIGH VOLTAGE!
Disconnect ALL power before servicing or installing this unit. Multiple power sources may be present. Failure to do so may cause property damage, personal injury or death.

- Prior to start-up, ensure that all electrical wires are properly sized and all connections are properly tightened.
- All panels must be in place and secured. For Air Tight application, gasket must be positioned at prescribed locations to achieve low airflow as stated in section 13.
- Tubing must be leak free.
- Condensate line must be trapped and pitched to allow for drainage.
- Low voltage wiring is properly connected.
- Auxiliary drain is installed when necessary and pitched to allow for drainage.
- Unit is protected from vehicular or other physical damage.
- Return air is not obtained from, nor are there any return air duct joints that are unsealed in, areas where there may be objectionable odors, flammable vapors or products of combustion such as carbon monoxide (CO), which may cause serious personal injury or death.

15 Regular Maintenance

The only item required to be maintained on a regular basis by the user is the circulating air filter(s). Filter should be cleaned or replaced regularly, typically once per month. A certified service technician must perform all other services.

WARNING

HIGH VOLTAGE!
Disconnect ALL power before servicing or installing this unit. Multiple power sources may be present. Failure to do so may cause property damage, personal injury or death.

IMPORTANT NOTE: If thumb screws are used to access the filter, ensure the washer installed on the screw behind the access panel remains in place after re-installation.

24 Volt Thermostat Wiring - Non-Communicating Thermostat Connections

NOTE: Wire routing must not interfere with the circulator blower operation or routine maintenance.

The air handler's integrated control module provides terminals for "Y1" and "Y2" and "W1" and "W2" thermostat connections. This allows the air handler to support the systems shown in the following table. Refer to the following figures for typical connections to the integrated control module. Thermostat wiring entrance holes are located in the top of the blower. Wire routing must not interfere with circulator blower operation or routine maintenance.

NOTE: A removable plug connector is provided with the control to make thermostat wire connections. This plug may be removed, wire connections made to the plug, and replaced. It is strongly recommended that you do not connect multiple wires into a single terminal. Wire nuts are recommended to ensure one wire is used for each terminal. Failure to do so may result in intermittent operation.

COOLING	HEAT PUMP HEATING	ELECTRIC HEATING
1-STAGE	------	1- or 2-STAGE
2-STAGE	------	1- or 2-STAGE
1-STAGE	1-STAGE	------
2-STAGE	2-STAGE	------
1-STAGE	1-STAGE	1- or 2-STAGE
2-STAGE	2-STAGE	1- or 2-STAGE

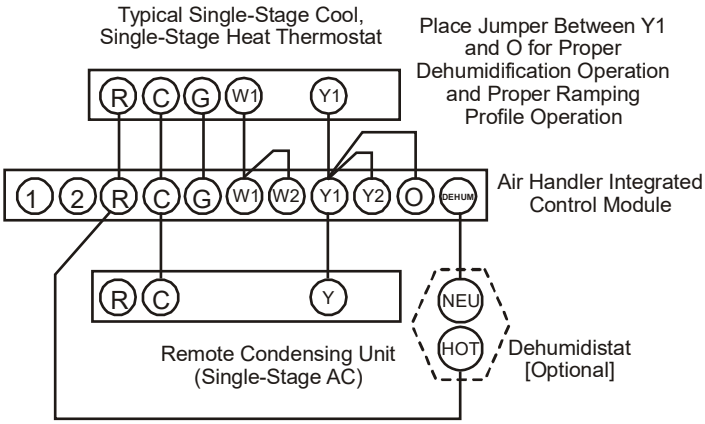

Typical Single-Stage Cooling with Single-Stage Heating

Figure 16

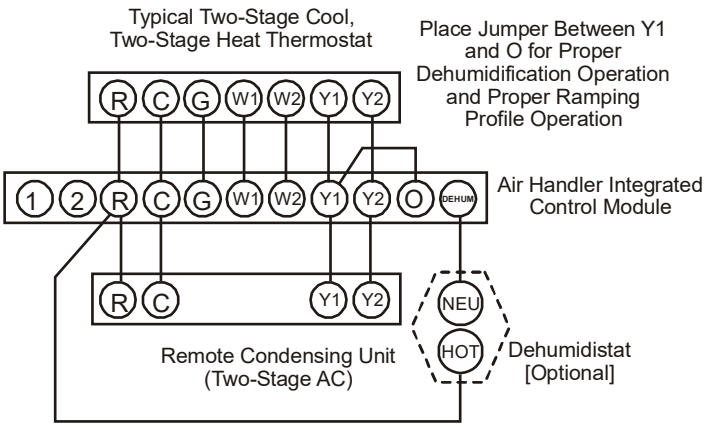

TYPICAL TW0-STAGE COOLING WITH TWO-STAGE HEATING

Figure 17

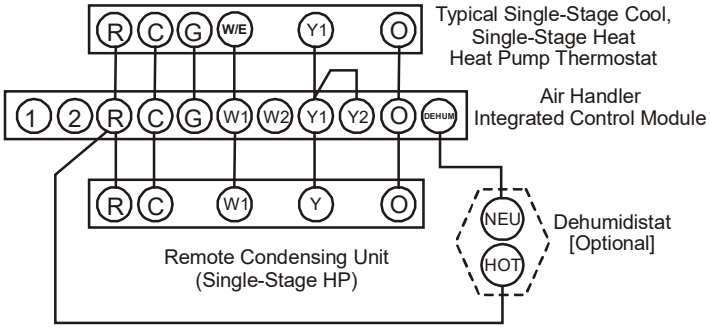

Typical Single-Stage Heat Pump with Auxiliary/Emergency Heating

Figure 18

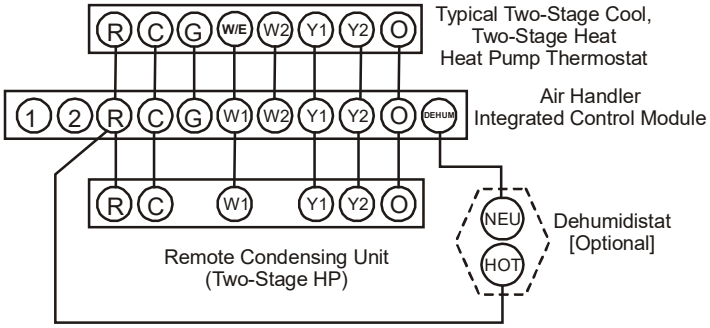

Typical Two Stage Heat Pump heating and Auxiliary/Emergency Heating

Figure 19

The optional usage of a dehumidistat allows the air handler's circulator blower to operate at a slightly lower speed during a combined thermostat call for cooling and dehumidistat call for dehumidification. This lower blower speed enhances dehumidification of the conditioned air as it passes through the AC coil. For proper function, a dehumidistat applied to this air handler must operate on 24 VAC and utilize a switch which opens on humidity rise.

To install/connect a dehumidistat:

1. Turn OFF power to air handler.
2. Secure the dehumidistat neutral wire (typically the white lead) to the screw terminal marked "DEHUM" on the air handler's integrated control module.
3. Secure the dehumidistat hot wire (typically the black lead) to the screw terminal marked "R" on the air handler's integrated control module.
4. Secure the dehumidistat ground wire (typically the green lead) to the ground screw on the air handler. NOTE: Ground wire may not be present on all dehumidistats.
5. To enable the dehumidification function, move the dehumidification dip switch (S7) from OFF to ON. See following figure.

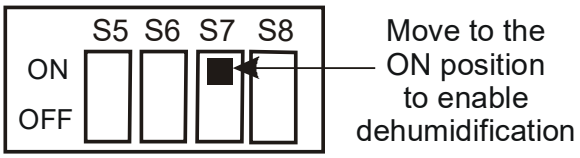

Dip Switches - Dehumidificaiton Enable

Figure 20

6. Turn ON power to air handler.

Auxiliary Alarm Switch

The control is equipped with two Auxiliary Alarm terminals labeled CAS which can be utilized with communicating mode setups (typically used for condensate switch wiring).

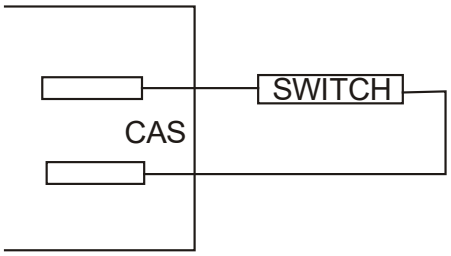

Figure 21

Legacy mode use

In a legacy system (Non-communicating), this feature is not operational. Any auxiliary alarm switch must be used to interrupt the Y1 signal either to the indoor or outdoor unit.

Communication mode use

This feature can be activated or deactivated through the thermostat user menus. An auxiliary alarm switch must be normally closed and open when the base pan's water level in the evaporator coil reaches a particular level. The control will respond by turning off the outdoor compressor and display the proper fault codes. If the switch is detected closed for 30 seconds, normal operation resumes and the error message will be removed.

DVPTC Motor Orientation**

If the unit is in the upflow position, there is no need to rotate the motor. If the unit is in the downflow position, loosen motor mount and rotate motor as shown in the DV**PTC Motor Orientation figure below. Be sure motor is oriented with the female connections on the casing down. If the motor is not oriented with the connections down, water could collect in the motor and may cause premature failure.

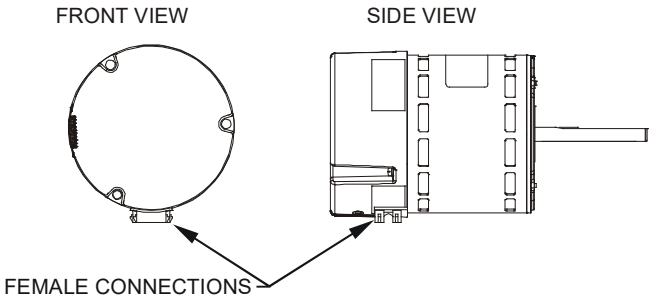

DVPTC Motor Orientation**

Figure 22

16 Circulator Blower

This air handler is equipped with a multi-speed circulator blower. This blower provides ease in adjusting blower speeds. The Specification Sheet applicable to your model provides an airflow table, showing the relationship between airflow (CFM) and external static pressure (E.S.P.), for the proper selection of heating and cooling speeds. The heating blower speed is shipped set at 21kW or 25kW, and the cooling blower speed is set at “D”. These blower speeds should be adjusted by the installer to match the installation requirements so as to provide the correct electric heating CFM and correct cooling CFM.

Use the CFM LED (green) to obtain an approximate airflow quantity. The green CFM LED blinks once for each 100 CFM of airflow.

1. Determine the tonnage of the cooling system installed with the air handler. If the cooling capacity is in BTU/hr divide it by 12,000 to convert capacity to TONs.

   Example: Cooling Capacity of 30,000 BTU/hr.

   30,000/12,000 = 2.5 Tons

2. Determine the proper airflow for the cooling system. Most cooling systems are designed to work with airflows between 350 and 450 CFM per ton. Most manufacturers recommend an airflow of about 400 CFM per ton.

   Example: 2.5 tons X 400 CFM per ton = 1000 CFM

The cooling system manufacturer’s instructions must be checked for required airflow. Any electronic air cleaners or other devices may require a specific airflow; consult installation instructions of those devices for requirements.

3. Knowing the air handler model, locate the high stage cooling airflow charts in the Specification Sheet applicable to your model. Look up the cooling airflow determined in step 2 and find the required cooling speed and adjustment setting.

   Example: A DV31PTCC14 air handler installed with a 2.5 ton air conditioning system. The airflow needed is 1000 CFM. Looking at the cooling speed chart for DV31PTCC14, find the airflow closest to 1000 CFM. A cooling airflow of 1000 CFM can be attained by setting the cooling speed to “C” and the adjustment to “0” (no adjustment).

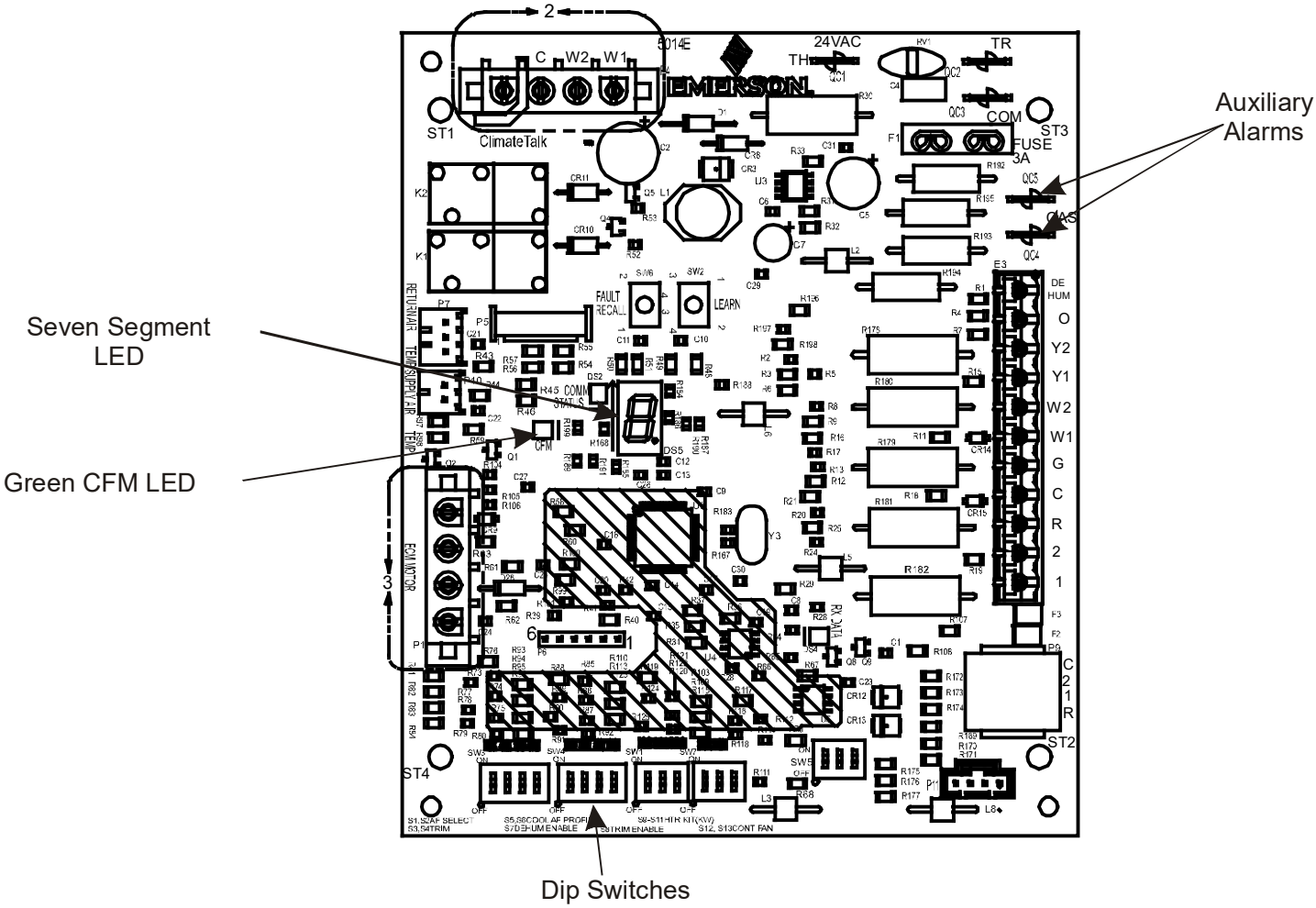

Communication Board

Figure 23

SPEED SELECTION DIP SWITCHES								
	COOL SELECTION SWITCHES		ADJUST SELECTION SWITCHES		PROFILE SELECTION SWITCHES		CONTINUOUS FAN SPEED	
TAP	S1	S2	S3	S4	S5	S6	S12	S13
A	OFF	OFF	OFF	OFF	OFF	OFF	OFF	OFF
B	ON	OFF	ON	OFF	ON	OFF	ON	OFF
C	OFF	ON	OFF	ON	OFF	ON	OFF	ON
D	ON	ON	ON	ON	ON	ON	ON	ON

PROFILES	PRE-RUN	SHORT-RUN	OFF DELAY
A	----	----	60 SEC. / 100%
B	----	30 SEC. / 50%	60 SEC. / 100%
C	----	7.5 MIN. / 82%	60 SEC. / 100%
D	----	7.5 MIN. / 82%	30 SEC. / 50%

TO SET AIRFLOW: (1) Select model and desired HIGH STAGE COOLING AIRFLOW. Determine the corresponding TAP (A, B, C, D). Set DIP switches S1 and S2 to the appropriate ON/OFF positions.

(2) Select model and installed electric heater size. Set DIP switches S9, S10 and S11 to the appropriate ON/OFF positions.

(3) If airflow adjustment is required, set TRIM ENABLE SWITCH S8 to ON (OFF-0% Trim) and set S3 and S4 to appropriate ON/OFF positions. TAP A is +5%, TAP B is -5%, TAP C is +10%, TAP D is -10%.

TO SET COMFORT MODE: Select desired Comfort Mode Profile (see profiles above). Set DIP switches S5 and S6 to appropriate ON/OFF positions.

DEHUMIDIFICATION: To enable, set DIP switch S7 to ON. Cooling airflow will be reduced to 85% of nominal value during cool call when DEHUM command is present. To disable, set S7 to OFF.

CONTINUOUS FAN SPEED: Use DIP switches S12 and S13 to select one of the 4 continuous fan speeds, TAP A is 25%, TAP B is 50%, TAP C is 75%, TAP D is 100%.

NOTES:

1. Airflow data shown applies to legacy mode operation only. For a fully communicating system, please see the outdoor unit's installation instructions for cooling and heat pump airflow data. See *Fully Communicating Daikin System-Airflow Consideration* section for details.

2. Airflow blink codes are approximations of actual airflow.

COOLING / HEAT PUMP AIRFLOW TABLE			
MODEL	Tap	Low Stage	High Stage
DV25PTCB14 DV35PTCB14	A	410	610
	B	565	840
	C	650	970
	D	685	1020
DV29PTCB14 DV37PTCB14	A	375	610
	B	545	795
	C	630	930
	D	740	1085
DV33PTCC14	A	475	690
	B	565	785
	C	690	980
	D	760	1110
DV39PTCC14	A	665	990
	B	770	1150
	C	815	1095
	D	910	1225
DV49PTCC14	A	710	955
	B	745	1005
	C	880	1180
	D	975	1310
DV31PTCC14 DV37PTCC14	A	590	880
	B	705	1055
	C	845	1265
	D	910	1360
DV59PTCC14	A	610	875
	B	810	1225
	C	940	1410
	D	1070	1595
DV37PTCD14	A	605	900
	B	725	1080
	C	820	1225
	D	940	1405
DV59PTCD14	A	1040	1445
	B	1260	1790
	C	1330	1890
	D	1395	1990
DV49PTCD14	A	820	1195
	B	895	1320
	C	995	1460
	D	1056	1530
DV61PTCD14	A	1080	1630
	B	1210	1820
	C	1280	1925
	D	1350	2025

NOTE: Airflow blink codes are approximations of actual airflow. Airflows provided are at 0.3 static.

HTR (kW)	S9	S10	S11	DV25PTCB14	DV29PTCB14	DV35PTCB14 DV37PTCB14	DV33PTCC14	DV39PTCC14	DV49PTCC14	DV37PTCC14	DV59PTCC14	DV37PTCD14	DV59PTCD14	DV49PTCD14	DV61PTCD14	DV31PTCC14
3	ON	ON	ON	550	550	550	600	NR	NR	NR	NR	NR	NR	NR	NR	600
5	ON	ON	OFF	650	650	650	700	700	800	700	800	870	990	950	1030	700
6	ON	OFF	ON	700	700	700	750	770	800	770	800	970	1110	1060	1150	770
8	ON	OFF	OFF	800	800	800	850	880	950	880	950	1060	1200	1150	1250	880
10	OFF	ON	ON	850	875	875	920	970	1090	970	1090	1120	1240	1220	1320	970
15	OFF	ON	OFF	875	875	1050	950	1090	1290	1090	1290	1220	1520	1520	1650	1090
19*	OFF	OFF	ON	NR	NR	NR	NR	1280	1345	1280	1345	NR	NR	NR	NR	1280
20	OFF	OFF	ON	NR	NR	NR	NR	NR	NR	NR	NR	1250	1520	NR	1690	NR
21	OFF	OFF	OFF	NR	NR	NR	NR	NR	NR	NR	NR	NR	NR	NR	1750	NR
25*	OFF	OFF	OFF	NR	NR	NR	NR	NR	NR	NR	NR	NR	NR	NR	1750	NR

Note : Airflow data shown applies to the electric heat only in either legacy mode or communicating mode operation

* Within thermostat user menu will display 20KW for OFF-OFF-ON dip switch selection, 21kW for OFF-OFF-OFF dip switch selection.

21kW for OFF -OFF-OFF dip switch selection.

NR - Not Rated

†† For match up with a 3 ton outdoor unit:

Airflow for 5kW up to 15kW heater kits shall be set to 1300 cfm speed tap of ON-OFF-ON.

††† For match up with a 3.5 ton outdoor unit: Heater kit application shall not exceed 20 kW.

Airflow for 5 kW up to 20 kW heater kits shall be set to 1620 cfm speed tap of ON-OFF-ON.

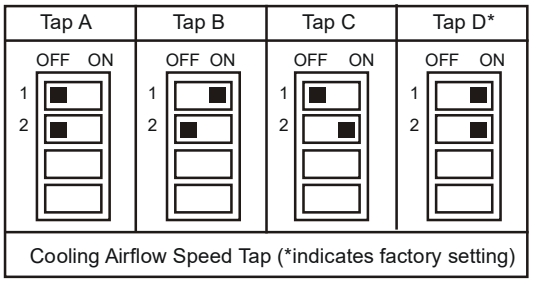

Figure 24

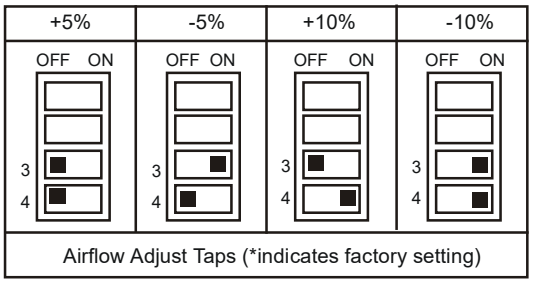

Figure 25

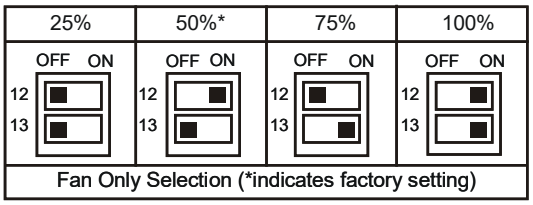

Figure 26

Dip Switches - Cooling Airflow and Airflow Adjust Taps

4. Locate the blower speed selection DIP switches on the integrated control module. Select the desired “cooling” speed tap by positioning switches 1 and 2 appropriately. If airflow adjustment is required, set dip switch S8 (trim enable) to ON (trim enable default is off). Then select the desired “adjust” tap by positioning switches S3 and S4 appropriately. Refer to the following Airflow Adjust Taps figure for switch positions and their corresponding taps. Verify CFM by counting the number of times the green CFM LED blinks.
5. Continuous fan speeds that provide 25, 50, 75, and 100% of the air handler’s maximum airflow capability are selectable via dip switches S12 and S13.

   If the air handler’s maximum airflow capability is 2000 CFM and 25% continuous fan speed is selected, the continuous fan speed will be 0.25 x 2000 CFM = 500 CFM.
6. The multi-speed circulator blower also offers several custom ON/OFF ramping profiles. These profiles may be used to enhance cooling performance and increase comfort level. The ramping profiles are selected using DIP switches 5 and 6. Refer to the following Dip Switches - Cooling Airflow Ramping Profiles figure for switch positions and their corresponding taps. Refer to the bullet points below for a description of each ramping profile. Verify profile selection by counting the green CFM LED blinks and timing each step of the ramping profile.

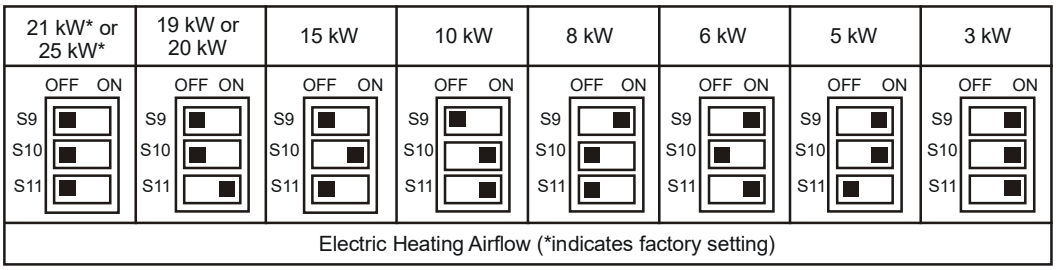

Figure 27

NOTE: Upon start up in communicating mode the circuit board may display an “Ec” error. This is an indication that the dip switches on the control board need to be configured in accordance with the Electric Heating Airflow Table. Configuring the dip switches and resetting power to the unit will clear the error code.

Within the thermostat user menu, will display 20 kW for OFF-OFF-ON dip switch selection and 21 kW for OFF-OFF-OFF dip switch selection.

- Profile A provides only an OFF delay of one (1) minute at 100% of the cooling demand airflow.

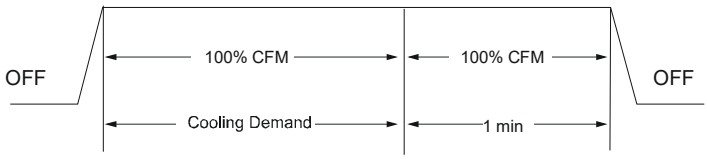

Figure 28

- Profile B ramps up to full cooling demand airflow by first stepping up to 50% of the full demand for 30 seconds. The motor then ramps to 100% of the required airflow. A one (1) minute OFF delay at 100% of the cooling airflow.

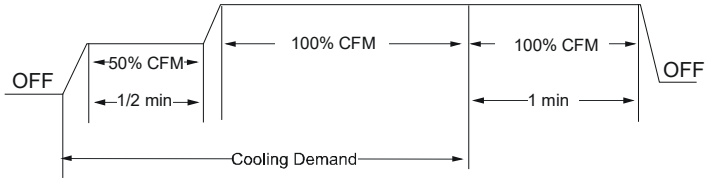

Figure 29

- Profile C ramps up to 82% of the full cooling demand airflow and operates there for approximately 7 1/2 minutes. The motor then steps up to the full demand airflow. Profile C also has a one (1) minute 100% OFF delay.

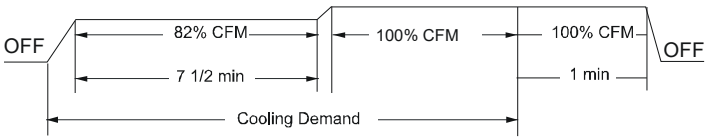

Figure 30

- Profile D ramps up to 50% of the demand for 1/2 minute, then ramps to 82% of the full cooling demand airflow and operates there for approximately 7 1/2 minutes. The motor then steps up to the full demand airflow. Profile D has a 1/2 minute at 50% airflow OFF delay.

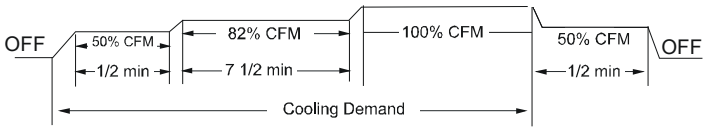

Figure 31

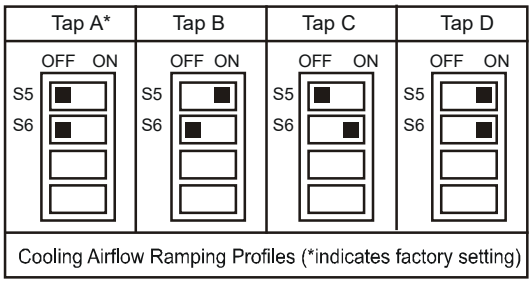

Dip Switches - Cooling Airflow Ramping Profiles

Figure 32

7. If an electric heater kit has been installed, determine the heater kilowatt (kW) rating. Using the Electric Heat Airflow table on page 16, set dip switches 9, 10, and 11 for the installed heater. The adjust setting (already established by the cooling speed selection) also applies to the electric heater kit airflow meaning electric heater airflow is adjusted by the same amount. This does not apply to systems setup with a communicating thermostat. Verify selected CFM by counting the green CFM LED blinks.

   If an electric heater kit has not been installed, set dip switches 9, 10, and 11 to any valid heater kit setting (see airflow table for valid settings). This will prevent an Ec Error code from being displayed.

NOTE: For installations not indicated in the preceding Temperature Rise Tables, the following formula is to be used:

TR = (kW x 3412) x (Voltage Correction) / (1.08 x CFM)

Where: TR = Temperature Rise

kW= Heater Kit Actual kW

3412 = Btu per kW

Voltage Correction =.96 (230 Supply Volts)

=.92 (220 Supply Volts)

=.87 (208 Supply Volts)

1.08 = Constant

CFM = Measured Airflow

NOTE: The Temperature Rise Tables can also be used to determine the air handler airflow delivery. When using these tables for this purpose set the room thermostat to maximum heat and allow the system to reach steady state conditions. Insert two thermometers, one in the return air and one in the supply air. The temperature rise is the supply air temperature minus the room air temperature.

Use HKR specification sheets to determine the HKR available for a given air handler.

Heat Kit Selection

For heat kit selection, see the Specification Sheet for each specific Air Handler.

17 Troubleshooting

17.1 Electrostatic Discharge (ESD) Precautions

NOTE: Discharge body's static electricity before touching unit. An electrostatic discharge can adversely affect electrical components.

Use the following precautions during air handler installation and servicing to protect the integrated control module from damage. By putting the air handler, the control, and the person at the same electrostatic potential, these steps will help avoid exposing the integrated control module to electrostatic discharge. This procedure is applicable to both installed and uninstalled (ungrounded) blowers.

1. Disconnect all power to the blower. Do not touch the integrated control module or any wire connected to the control prior to discharging your body's electrostatic charge to ground.
2. Firmly touch a clean, unpainted, metal surface of the air handler blower near the control. Any tools held in a person's hand during grounding will be discharged.
3. Service integrated control module or connecting wiring following the discharge process in step 2. Use caution not to recharge your body with static electricity; (i.e., do not move or shuffle your feet, do not touch ungrounded objects,

etc.). If you come in contact with an ungrounded object, repeat step 2 before touching control or wires.

4. Discharge your body to ground before removing a new control from its container. Follow steps 1 through 3 if installing the control on a blower. Return any old or new controls to their containers before touching any ungrounded object.

17.2 Diagnostic Chart

Refer to the Troubleshooting Chart at the end of this manual for assistance in determining the source of unit operational problems. The 7 segment LED display will provide any active fault codes. An arrow printed next to the display indicates proper orientation (arrow points to top of display). See Figure 29.

WARNING

HIGH VOLTAGE!
TO AVOID PERSONAL INJURY OR DEATH DUE TO ELECTRIC SHOCK, DISCONNECT ELECTRICAL POWER BEFORE PERFORMING ANY SERVICE OR MAINTENANCE.

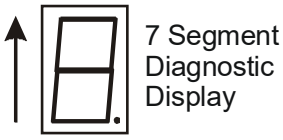

Figure 33

17.3 Fault Recall

The integrated control module is equipped with a momentary push-button switch that can be used to display the last six faults on the 7 segment LED display. The control must be in Standby Mode (no thermostat inputs) to use the feature. Depress the push-button for approximately two seconds and less than five seconds. The LED display will then display the six most recent faults beginning with the most recent fault and decrementing to the least recent fault. The faults may be cleared by depressing the button for greater than five seconds.

NOTE: Consecutively repeated faults are displayed a maximum of three times. Example: A clogged return air filter causes the air handler's motor to repeatedly enter a limiting condition. The control will only store this fault the first three consecutive times the fault occurs.

18 Fully Communicating Daikin System

18.1 Overview

NOTE: For a detailed procedure of thermostat commissioning process, please visit the Daikin *One+* website at http://daikinone.com

The Communicating system is a system that includes a Communicating compatible air handler and air conditioner or heat pump with a Daikin Communicating thermostat. Any other system configurations are considered invalid Communicating systems and must be connected as a traditional (or non-communicating) system (see the 24 Volt Thermostat Wiring - Non-Communicating Thermostat Connections section for details).

A Communicating heating/air conditioning system differs from a non-communicating/traditional system in the manner in which the indoor unit, outdoor unit and thermostat interact with one another. In a traditional system, the thermostat sends commands to the indoor and outdoor units via analog 24 VAC signals. It is a one-way communication path in that the indoor and outdoor units typically do not return information to the thermostat.

On the other hand, the indoor unit, outdoor unit, and thermostat comprising a Communicating system "communicate" digitally with one another. It is now a two-way communications path. The thermostat still sends commands to the indoor and outdoor units. However, the thermostat may also request and receive information from both the indoor and outdoor units. This information may be displayed on the Communicating thermostat. The indoor and outdoor units also interact with one another. The outdoor unit may send commands to or request information from the indoor unit. This two-way digital communications between the thermostat and subsystems (indoor/outdoor unit) and between subsystems is the key to unlocking the benefits and features of the Communicating system.

Two-way digital communications is accomplished using only two wires. The thermostat and subsystem controls are powered with 24 VAC Thus, a maximum of 4 wires between the equipment and thermostat is all that is required to operate the system.

18.2 Airflow Consideration

Airflow demands are managed differently in a fully communicating system than they are in a non-communicating wired system. The system operating mode (as determined by the thermostat) determines which unit calculates the system airflow demand. If the indoor unit is responsible for determining the airflow demand, it calculates the demand and sends it to the ECM motor. If the outdoor unit or thermostat is responsible for determining the demand, it calculates the demand and transmits the demand along with a fan request to the indoor unit. The indoor unit then sends the demand to the ECM motor. The following table lists the various Communicating systems, the operating mode, and airflow demand source.

For example, assume the system is a heat pump matched with an air handler. With a call for low stage cooling, the heat pump will calculate the system's low stage cooling airflow demand. The heat pump will then send a fan request along with the low stage cooling airflow demand to the air handler. Once received, the air handler will send the low stage cooling airflow demand to the ECM motor. The ECM motor then delivers the low stage cooling airflow. See the applicable Communicating air conditioner or heat pump installation manual for the airflow delivered during cooling or heat pump heating.

In continuous fan mode, the thermostat provides the airflow demand. Depending on which thermostat has been installed three or four continuous fan speeds may be available. If the thermostat provides three speeds (low, medium, high) they correspond to 25%, 50% and 75%, respectively, of the air handlers' maximum airflow capability. If the thermostat provides four continuous fan speeds then a 100% airflow option is added. During continuous fan operation, the thermostat sends a fan request along with the continuous fan demand to the air handler. The air handler, in turn, sends the demand to the ECM motor. The ECM motor delivers the requested continuous fan airflow.

System	System Operating Mode	Airflow Demand Source
Air Conditioner + Air Handler	Cooling	Air Conditioner
	Heating	Air Handler
	Continuous Fan	Thermostat
Heat Pump + Air Handler	Cooling	Heat Pump
	Heat Pump Heating Only	Heat Pump
	HP + Electric Heat Strips	> of Heat Pump or Air Handler Demand
	Electric Heat Strips Only	Air Handler
	Continuous Fan	Thermostat

Figure 34

18.3 Control Wiring

NOTE: Refer to section Electrical Connections for 208/230 volt line connections to the air handler.

NOTE: A plug connector is provided with the control to make thermostat wire connections. Wire nuts are recommended to ensure one wire is used for each terminal. Failure to do so may result in intermittent operation.

Typical 18 AWG thermostat wire may be used to wire the system components. One hundred and fifty (150) feet is the maximum length of wirerecommended between indoor unit and outdoor unit, or between indoor unit and thermostat.

Only the data lines 1 and 2 are requiried between the indoor and outdoor units. A 40VA, 208/230 VAC to 24 VAC transformer in the outdoor unit to provide 24 VAC power to the outdoor unit's electronic control.

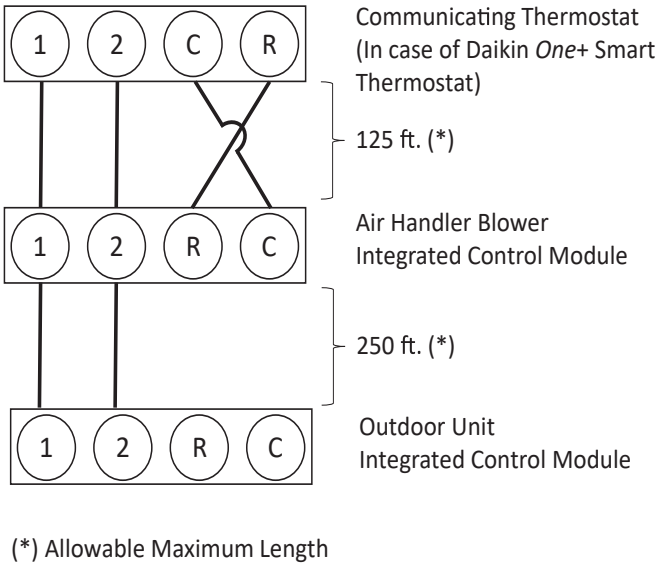

Figure 35

ATTENTION INSTALLER - IMPORTANT NOTICE

Please read carefully before installing this unit.

- **Power line terminal #C from Indoor unit must connect to terminal #C on thermostat and power line terminal #R from indoor unit must connect to terminal #R on thermostat. Verify wires are not reversed. (Note: The order of the terminals of the indoor unit and the Daikin *ONE+* thermostat may be different.)**
- **Do not attach any wires to the R&C Terminals on the AC/HP, as they are not needed for inverter unit.**
- **Data Line Terminal #1 from AC/HO must connect to terminal #1 on indoor unit and thermostat and data line terminal #2 from AC/HP must connect to terminal #2 on indoor unit and thermostat. Verify wires are not reversed.**

18.4 Fully Communicating Daikin System Advanced Features

The Communicating system permits access to additional system information, advanced set-up features, and advanced diagnostic/troubleshooting features. These advanced features are organized into a menu structure. If you are using a Daikin *One*+ Smart Thermostat, please visit website at https://www.daikinone.com for instructions.

18.5 Diagnostics

Accessing the air handler's diagnostics menu provides ready access to the last six faults detected by the air handler. Faults are stored most recent to least recent. Any consecutively repeated fault is stored a maximum of three times. Example: A clogged return air filter causes the air handler's motor to repeatedly enter a limiting condition. The control will only store this fault the first three consecutive times the fault occurs.

NOTE: It is highly recommended that the fault history be cleared after performing maintenance or servicing the air handler.

18.5.1 Network Troubleshooting

The Communicating system is a fully communicating system, and thus, constitutes a network. Occasionally the need to troubleshoot the network may arise. The integrated air handler control has some on-board tools that may be used to troubleshoot the network. These tools are: red communications LED, green receive (Rx) LED, and learn button. Refer to the Communications Troubleshooting Chart at the end of this manual for error codes, possible causes and corrective actions.

- Red communications LED – Indicates the status of the network. The table below indicates the LED status and the corresponding potential problem.
- Green receive LED – Indicates network traffic. The table below indicates the LED status and the corresponding potential problem.
- Learn button – Used to reset the network. Depress the button for approximately 2 seconds to reset the network.

18.5.2 System Troubleshooting

NOTE: Refer to the instructions accompanying the Communicating compatible outdoor AC/HP unit for troubleshooting information.

Refer to the Troubleshooting Chart at the end of this manual for a listing of possible air handler error codes, possible causes and corrective actions.

WARNING

HIGH VOLTAGE!
Disconnect ALL power before servicing or installing this unit. Multiple power sources may be present. Failure to do so may cause property damage, personal injury or death.

19 Start-Up Procedure

- Prior to start-up, ensure that all electrical connections are properly sized and tightened.
- All panels must be in place and secured. For Air Tight application, neoprene gasket must be positioned at prescribed locations to achieve low airflow as stated in section 13.
- Tubing must be leak free.
- Unit should be elevated, trapped and pitched to allow for drainage.
- Low voltage wiring is connected.
- Auxiliary drain is installed when necessary and pitched to allow for drainage.
- Drain pan and drain tubing has been leak checked.
- Return and supply ducts are sealed.
- Unit is elevated when installed in a garage or where flammable vapors may be present.
- Unit is protected from vehicular or other physical damage.
- Return air is not obtained from any areas where there may be objectionable odors, flammable vapors or products of combustion such as carbon monoxide (CO), which may cause serious personal injury or death.

20 Regular Maintenance

The only item to be maintained on a regular basis by the user is the circulating air filter(s). Filter should be cleaned or replaced regularly. A certified service technician must perform all other services.

NOTE: THESE INSTRUCTIONS ARE SPECIFICALLY FOR DV**PTC MODELS. DO NOT USE THESE DIAGRAMS FOR ANY OTHER MODELS. SEE SEPARATE INSTALLATION AND OPERATING INSTRUCTIONS FOR ATUF, ARUF, ARPT, ADPF, AND ASPF MODELS.

NOTICE: THIS PRODUCT CONTAINS ELECTRONIC COMPONENTS WHICH REQUIRE A DEFINITE GROUND. PROVISIONS ARE MADE FOR CONNECTION OF THE GROUND. A DEDICATED GROUND FROM THE MAIN POWER SUPPLY OR AN EARTH GROUND MUST BE PROVIDED.

COMMUNICATIONS TROUBLESHOOTING CHART

LED	LED Status	Indication	Possible Causes	Corrective Action(s)	Notes & Cautions
Red Communications LED	Off	• Normal condition	• None	• None	• None
	1 Flash	• Communications Failure	• Communications Failure	• Depress Learn Button • Verify that bus BIAS and TERM dipswitches are in the ON position	• Depress once quickly for a power-up reset • Depress and hold for 2 seconds for an out-of-box reset
	2 Flashes	• Out-of-box reset	• Control power up • Learn button depressed	• None	• None
Green Receive LED	Off	• No Power • Communications error	• No power to air handler • Open fuse • Communications error	• Check fuses and circuit breakers; replace/reset • Replace blown fuse • Check for shorts in low voltage wiring in air handler/system • Reset network by depressing learn button • Check data 1/ data 2 voltages	• Turn power OFF prior to repair
	1 Steady Flash	• No network found	• Broken/ disconnected data wire(s) • Air handler is installed as a noncommunicating/ traditional system	• Check communications wiring (data 1/ data 2 wires) • Check wire connections at terminal block • Verify air handler installation type (noncommunicating/ traditional or communicating) • Check data 1/ data 2 voltages	• Turn power OFF prior to repair • Verify wires at terminal blocks are securely twisted together prior to inserting into terminal block • Verify data1 and data voltages as described above
	Rapid Flashing	• Normal network traffic	• Control is “talking” on network as expected	• None	• None
	On Solid	• Data 1/ Data 2 miss-wire	• Data 1 and data 2 wires reversed at air handler, thermostat, or Communicating compatible outdoor AC/HP • Short between data 1 and data 2 wires • Short between data 1 or data 2 wires and R (24VAC) or C (24VAC common)	• Check communications wiring (data 1/ data 2 wires) • Check wire connections at terminal block • Check data 1/ data 2 voltages	• Turn power OFF prior to repair • Verify wires at terminal blocks are securely twisted together prior to inserting into terminal block • Verify data1 and data voltages as described above

Air Handlers Advanced Features Menu

CONFIGURATION	
Submenu Item	**Indication (for Display Only; not User Modifiable)**
Electric Heat Size (HTR KW)	Displays the size in kW of the selected electric heaters.
Motor HP (1/2, 3/4, or 1 MTR HP)	Displays the air handler indoor blower motor horsepower.
Heat ON Delay (HT ON)	Displays the electric heat indoor blower ON delay.
Heat OFF Delay (HT OFF)	Displays the electric heat indoor blower OFF delay.

DIAGNOSTICS		
Submenu Item	**Indication/User Modifiable Options**	**Comments**
Fault 1 (FAULT #1)	Most recent modular fault	For display only
Fault 2 (FAULT #2)	Next most recent modular fault	For display only
Fault 3 (FAULT #3)	Next most recent modular fault	For display only
Fault 4 (FAULT #4)	Next most recent modular fault	For display only
Fault 5 (FAULT #5)	Next most recent modular fault	For display only
Fault 6 (FAULT #6)	Least recent modular fault	For display only
Clear Fault History (CLEAR)	NO or YES	Selecting “YES” clears the fault history

NOTE: Consecutively repeated faults are shown a maximum of 3 times

IDENTIFICATION	
Submenu Item	**Indication (for Display Only; not User Modifiable)**
Model Number (MOD NUM)	Displays the modular blower model number
Serial Number (SER NUM)	Displays the modular blower serial number (Optional)
Software (SOFTWARE)	Displays the application software revision

SET-UP		
Submenu Item	**User Modifiable Options**	**Comments**
Heat Airflow Trim (HT TRM)	-10% to +10% in 2% increments, default is 0%	Trims the heating airflow by the selected amount.

STATUS	
Submenu Item	**Indication (for Display Only; not User Modifiable)**
Mode (MODE)	Displays the current air handler operating mode
CFM (CFM)	Displays the airflow for the current operating mode

22 Diagnostic Codes

7 SEGMENT LED (characters will alternate)	DESCRIPTION OF CONDITION
(no display)	INTERNAL CONTROL FAULT / NO POWER
On	STANDBY, WAITING FOR INPUTS
Ed	HEATER KIT DIP SWITCHES NOT SET PROPERLY
Eb	NO HTR KIT INSTALLED - SYSTEM CALLING FOR AUXILIARY HEAT
E5	FUSE OPEN
EF	AUXILIARY SWITCH OPEN
d0	DATA NOT ON NETWORK
d1	INVALID DATA ON NETWORK
d4	INVALID MEMORY CARD DATA
b0	BLOWER MOTOR NOT RUNNING
b1	BLOWER MOTOR COMMUNICATION ERROR
b2	BLOWER MOTOR HP MISMATCH
b3	BLOWER MOTOR OPERATING IN POWER, TEMP., OR SPEED LIMIT
b4	BLOWER MOTOR CURRENT TRIP OR LOST ROTOR
b5	BLOWER MOTOR ROTOR LOCKED
b6	OVER/UNDER VOLTAGE TRIP OR OVER TEMPERATURE TRIP
b7	INCOMPLETE PARAMETER SENT TO MOTOR
b9	LOW INDOOR AIRFLOW
C1	LOW STAGE COOL - LEGACY MODE ONLY
C2	HIGH STAGE COOL - LEGACY MODE ONLY
P1	LOW STAGE HEAT PUMP HEAT - LEGACY MODE ONLY
P2	HIGH STAGE HEAT PUMP HEAT - LEGACY MODE ONLY
h1	EMERGENCY HEAT LOW - COMMUNICATING MODE ONLY
h2	EMERGENCY HEAT HIGH - COMMUNICATING MODE ONLY
FC	FAN COOL - COMMUNICATING MODE ONLY
FH	FAN HEAT - COMMUNICATING MODE ONLY
F	FAN ONLY
H1	ELECTRIC HEAT LOW
H2	ELECTRIC HEAT HIGH
dF	DEFROST - COMMUNICATING MODE ONLY (note: defrost is displayed as H1 in a legacy setup)
GREEN CFM LED - EACH FLASH REPRESENTS 100CFM (USE FOR AIRFLOW APPROXIMATION ONLY) - EXAMPLE: 8 FLASHES = 800CFM	
	0140A00079-A

23 Wiring Diagrams

WARNING **HIGH VOLTAGE! DISCONNECT ALL POWER BEFORE SERVICING. MULTIPLE POWER SOURCES MAY BE PRESENT. FAILURE TO DO SO MAY CAUSE PROPERTY DAMAGE, PERSONAL INJURY OR DEATH.**

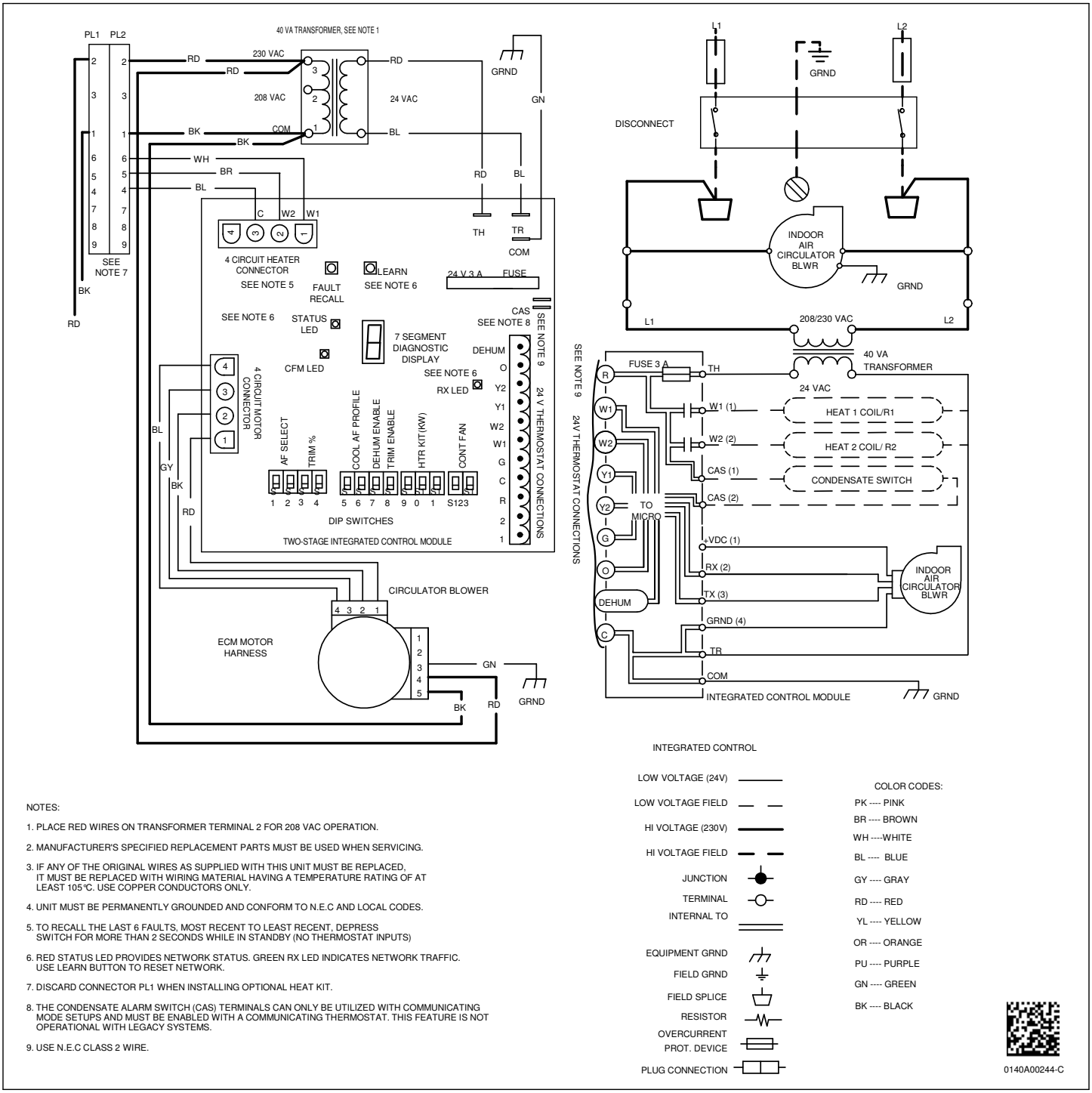

NOTES:

1. PLACE RED WIRES ON TRANSFORMER TERMINAL 2 FOR 208 VAC OPERATION.
2. MANUFACTURER'S SPECIFIED REPLACEMENT PARTS MUST BE USED WHEN SERVICING.
3. IF ANY OF THE ORIGINAL WIRES AS SUPPLIED WITH THIS UNIT MUST BE REPLACED, IT MUST BE REPLACED WITH WIRING MATERIAL HAVING A TEMPERATURE RATING OF AT LEAST 105°C. USE COPPER CONDUCTORS ONLY.
4. UNIT MUST BE PERMANENTLY GROUNDED AND CONFORM TO N.E.C AND LOCAL CODES.
5. TO RECALL THE LAST 6 FAULTS, MOST RECENT TO LEAST RECENT, DEPRESS SWITCH FOR MORE THAN 2 SECONDS WHILE IN STANDBY (NO THERMOSTAT INPUTS)
6. RED STATUS LED PROVIDES NETWORK STATUS. GREEN RX LED INDICATES NETWORK TRAFFIC. USE LEARN BUTTON TO RESET NETWORK.
7. DISCARD CONNECTOR PL1 WHEN INSTALLING OPTIONAL HEAT KIT.
8. THE CONDENSATE ALARM SWITCH (CAS) TERMINALS CAN ONLY BE UTILIZED WITH COMMUNICATING MODE SETUPS AND MUST BE ENABLED WITH A COMMUNICATING THERMOSTAT. THIS FEATURE IS NOT OPERATIONAL WITH LEGACY SYSTEMS.
9. USE N.E.C CLASS 2 WIRE.

Wiring is subject to change. Always refer to the wiring diagram on the unit for the most up-to-date wiring.

WARNING **HIGH VOLTAGE! DISCONNECT ALL POWER BEFORE SERVICING. MULTIPLE POWER SOURCES MAY BE PRESENT. FAILURE TO DO SO MAY CAUSE PROPERTY DAMAGE, PERSONAL INJURY OR DEATH.**

3-Phase Heat Kit

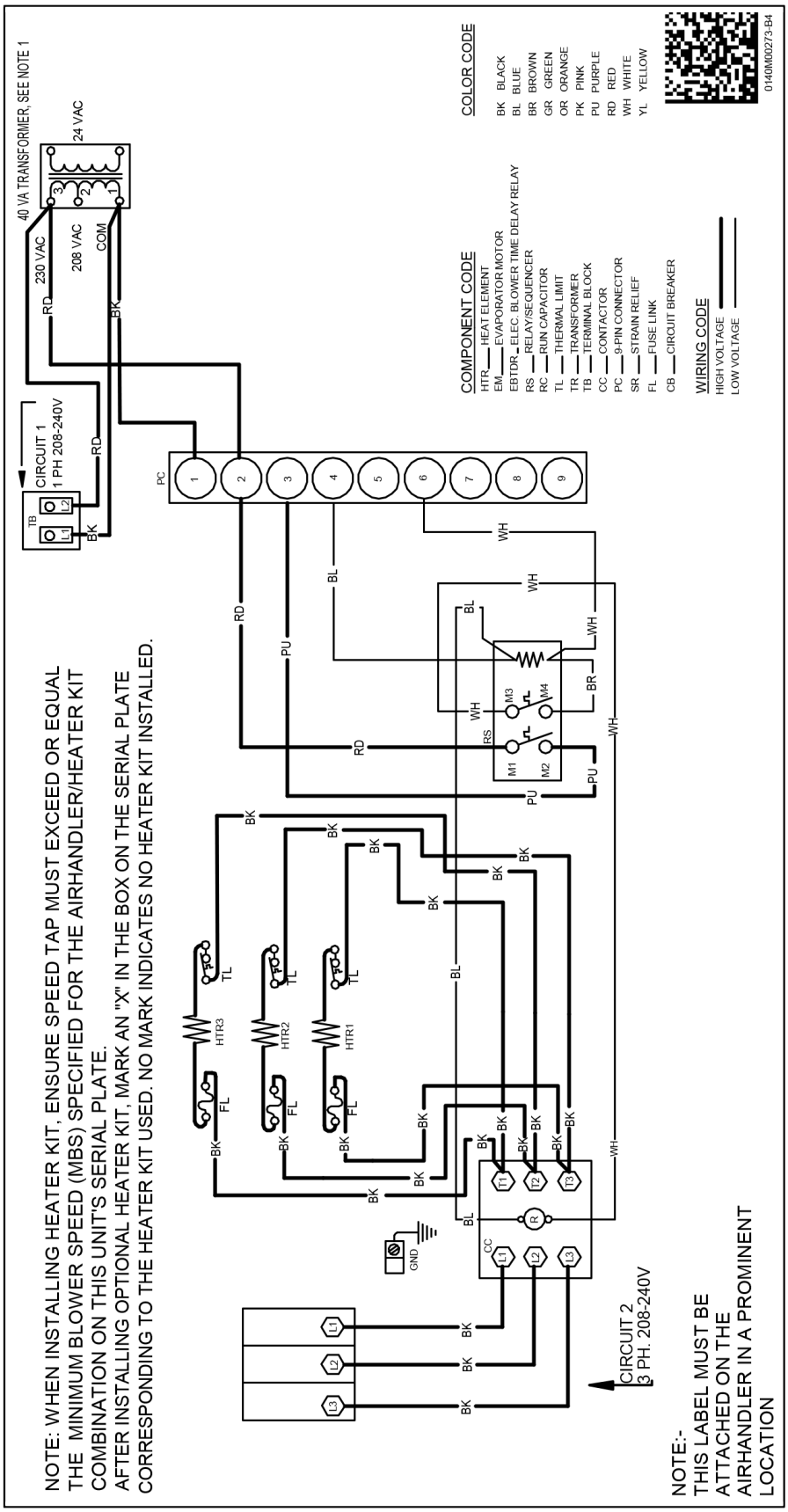

Wiring is subject to change. Always refer to the wiring diagram on the unit for the most up-to-date wiring.

AIR HANDLER

AIR HANDLER homeowner's Routine Maintenance Recommendations

*We strongly recommend a bi-annual maintenance checkup be performed before the heating and cooling seasons begin by a **qualified servicer.***

REPLACE OR CLEAN FILTER

IMPORTANT NOTE: Never operate unit without a filter installed as dust and lint will build up on internal parts resulting in loss of efficiency, equipment damage and possible fire.

An indoor air filter must be used with your comfort system. A properly maintained filter will keep the indoor coil of your comfort system clean. A dirty coil could cause poor operation and/or severe equipment damage.

Your air filter or filters could be located in your furnace, in a blower unit, or in "filter grilles" in your ceiling or walls. The installer of your air conditioner or heat pump can tell you where your filter(s) are, and how to clean or replace them.

Check your filter(s) at least once a month. When they are dirty, replace or clean as required. Disposable type filters should be replaced.

Reusable type filters may be cleaned.

You may want to ask your dealer about high efficiency filters. High efficiency filters are available in both electronic and non-electronic types. These filters can do a better job of catching small airborne particles.

MOTORS

Indoor and outdoor fan motors are permanently lubricated and do not require additional oiling.

WARNING

HIGH VOLTAGE!
DISCONNECT ALL POWER BEFORE SERVICING OR INSTALLING THIS UNIT. MULTIPLE POWER SOURCES MAY BE PRESENT. FAILURE TO DO SO MAY CAUSE PROPERTY DAMAGE, PERSONAL INJURY OR DEATH.

ALUMINUM INDOOR COIL CLEANING

(QUALIFIED SERVICER ONLY)

This unit is equipped with an aluminum tube evaporator coil. The safest way to clean the evaporator coil is to simply flush the coil with water. This cleaning practice remains as the recommended cleaning method for both copper tube and aluminum tube residential evaporator coils.

It has been determined that many coil cleaners and drain pan tablets contain corrosive chemicals that can be harmful to aluminum tube and fin evaporator coils. Even a one-time application of these corrosive chemicals can cause premature aluminum evaporator coil failure. Any cleaners that contain corrosive chemicals including, but not limited to, chlorine and hydroxides, should not be used.

An alternate cleaning method is to use one of the products listed in TP-109* to clean the coils. The cleaners listed are the only agents deemed safe and approved for use to clean round tube aluminum coils. TP-109 is also available on the web site in Partner Link > Service

Toolkit.

NOTE: Ensure coils are rinsed well after use of any chemical cleaners.

BEFORE YOU CALL YOUR SERVICER

- Check the thermostat to confirm that it is properly set.
- Wait 15 minutes. Some devices in the outdoor unit or in programmable thermostats will prevent compressor operation for awhile, and then reset automatically. Also, some power companies will install devices which shut off air conditioners for several minutes on hot days. If you wait several minutes, the unit may begin operation on its own.

CAUTION

TO AVOID THE RISK OF EQUIPMENT DAMAGE OR FIRE, INSTALL THE SAME AMPERAGE BREAKER OR FUSE AS YOU ARE REPLACING. IF THE CIRCUIT BREAKER OR FUSE SHOULD OPEN AGAIN WITHIN THIRTY DAYS, CONTACT A QUALIFIED SERVICER TO CORRECT THE PROBLEM.
IF YOU REPEATEDLY RESET THE BREAKER OR REPLACE THE FUSE WITHOUT HAVING THE PROBLEM CORRECTED, YOU RUN THE RISK OF SEVERE EQUIPMENT DAMAGE.

- Check the electrical panel for tripped circuit breakers or failed fuses. Reset the circuit breakers or replace fuses as necessary.
- Check the disconnect switch near the indoor furnace or blower to confirm that it is closed.
- Check for obstructions on the outdoor unit. Confirm that it has not been covered on the sides or the top. Remove any obstruction that can be safely removed. If the unit is covered with dirt or debris, call a qualified servicer to clean it.
- Check for blockage of the indoor air inlets and outlets. Confirm that they are open and have not been blocked by objects (rugs, curtains or furniture).
- Check the filter. If it is dirty, clean or replace it.
- Listen for any unusual noise(s), other than normal operating noise, that might be coming from the outdoor unit. If you hear unusual noise(s) coming from the unit, call a qualified servicer.

Air Handler / Coil				
	Model Number	_____		
	Serial Number	_____		
ELECTRICAL				
Line Voltage (Measure L1 and L2 Voltage)	L1 - L2	_____		
Secondary Voltage (Measure Transformer Output Voltage)	R - C	_____		
Blower Amps		_____		
Heat Strip 1 - Amps		_____		
Heat Strip 2 - Amps		_____		
BLOWER EXTERNAL STATIC PRESSURE				
Return Air Static Pressure		_____	IN. W.C.	
Supply Air Static Pressure		_____	IN. W.C.	
Total External Static Pressure (Ignoring +/- from the reading above, add total here)		_____	IN. W.C.	
TEMPERATURES				
Return Air Temperature (Dry bulb / Wet bulb)		_____	DB °F	_____ WB °F
Cooling Supply Air Temperature (Dry bulb / Wet bulb)		_____	DB °F	_____ WB °F
Heating Supply Air Temperature		_____	DB °F	
Temperature Rise		_____	DB °F	
Delta T (Difference between Supply and Return Temperatures)		_____	DB °F	

Air Handler / Coil - (Inverter Matched)	
INVERTER AH / COIL ONLY	
Check EEV and EEV wiring is secure (no adjustment required)	_____

Additional Checks	
Check wire routings for any rubbing	_____
Check product for proper draining	_____
Check screw tightness on blower wheel	_____
Check factory wiring and wire connections	_____
Check product for proper clearances as noted by installtion instructions	_____

°F to °C formula: (°F - 32) divided by 1.8 = °C **°C to °F formula: (°C multiplied by 1.8) + 32 = °F**

THIS PAGE INTENTIONALLY LEFT BLANK

THIS PAGE INTENTIONALLY LEFT BLANK

CUSTOMER FEEDBACK

Daikin Comfort Technologies is very interested in all product comments.

Please fill out the feedback form on the following link:

https://daikincomfort.com/contact-us

You can also scan the QR code on the right to be directed to the feedback page.

PRODUCT REGISTRATION

Thank you for your recent purchase. Though not required to get the protection of the standard warranty, registering your product is a relatively short process, and entitles you to additional warranty protection, except that failure by California and Quebec residents to register their product does not diminish their warranty rights. The duration of warranty coverages in Texas differs in some cases.

For Product Registration, please register by following this link:

https://daikincomfort.com/owner-support/product-registration

You can also scan the QR code on the right to be directed to the Product Registration page.

Our continuing commitment to quality products may mean a change in specifications without notice.

© 2014-2021, 2023 ***DAIKIN COMFORT TECHNOLOGIES MANUFACTURING, L.P.***

19001 Kermier Road Waller, TX 77484

www.daikincomfort.com