DAIKIN

INSTALLATION INSTRUCTIONS

DV**PEC / DV**FEC (EEV SERIES AIR HANDLERS)

1 Important Safety Instructions 2
2 Shipping Inspection 3
2.1 Parts 3
2.2 Handling 3
3 Codes & Regulations 3
4 Replacement Parts 3
5 Pre-Installation Considerations 3
5.1 Preparation 3
5.2 System Matches 3
5.3 Interconnecting Tubing 3
5.4 Clearances 3
5.5 Horizontal Applications 3
5.6 Access 3
6 Installation Location 4
6.1 Upflow Installation 4
6.2 Horizontal Left Installation 4
6.3 Downflow/Horizontal Right Installation 4
7 Refrigerant Lines 7
7.1 Tubing Size 7
7.2 Tubing Preparation 7
7.3 Tubing Connections 8
8 Condensate Drain Lines 8
9 Ductwork 9
9.1 Return Ductwork 9
10 Return Air Filters 9
11 Electric Heat 9
12 Electrical and Control Wiring 11
12.1 Building Electrical Service Inspection 11
12.2 Wire Sizing 11
12.3 Maximum Overcurrent Protection (MOP) 11
12.4 Electrical Connections – Supply Voltage 11
12.4.1 Air Handler Only (Non-Heat Kit Models) 11
12.4.2 Air Handler - Non-Circuit Breaker Heat Kits 11
12.4.3 Air Handler With Circuit Breaker Heat Kit 11
13 Achieving 1.4% & 2% Low Leakage Rate 12
14 Airflow Trim 12
15 Miscellaneous Start-Up Checklist 12
15.1 Auxiliary Alarm Switch 13
15.2 Circulator Blower 14
15.3 Motor Orientation 14
15.4 Accessory Contacts 14
16 Troubleshooting 15
16.1 Electrostatic Discharge (ESD) Precautions 15
16.2 Diagnostic Chart 15
16.3 Fault Recall 15
17 Fully Communicating Daikin System 16
17.1 Overview 16
17.2 Airflow Consideration 16
17.3 Thermostat Wiring 16
17.3.1 Two-Wire Outdoor and Four-Wire Indoor Wiring 16
17.4 Network Troubleshooting 16
17.5 System Troubleshooting 17
Troubleshooting 18
Diagnostic Codes 21
Setting the mode display 22
Wiring Diagram 24
Routine Maintenance 25
Start-Up Checklist 26

WARNING

ONLY PERSONNEL THAT HAVE BEEN TRAINED TO INSTALL, ADJUST, SERVICE, MAINTENANCE OR REPAIR (HEREINAFTER, "SERVICE") THE EQUIPMENT SPECIFIED IN THIS MANUAL SHOULD SERVICE THE EQUIPMENT.

THIS EQUIPMENT IS NOT INTENDED FOR USE BY PERSONS (INCLUDING CHILDREN) WITH REDUCED PHYSICAL, SENSORY OR MENTAL CAPABILITIES, OR LACK OF EXPERIENCE AND KNOWLEDGE, UNLESS THEY HAVE BEEN GIVEN SUPERVISION OR INSTRUCTION CONCERNING USE OF THE APPLIANCE BY A PERSON RESPONSIBLE FOR THEIR SAFETY.

CHILDREN SHOULD BE SUPERVISED TO ENSURE THAT THEY DO NOT PLAY WITH THE EQUIPMENT.

THE MANUFACTURER WILL NOT BE RESPONSIBLE FOR ANY INJURY OR PROPERTY DAMAGE ARISING FROM IMPROPER SUPERVISION, SERVICE OR SERVICE PROCEDURES. IF YOU SERVICE THIS UNIT, YOU ASSUME RESPONSIBILITY FOR ANY INJURY OR PROPERTY DAMAGE WHICH MAY RESULT. IN ADDITION, IN JURISDICTIONS THAT REQUIRE ONE OR MORE LICENSES TO SERVICE THE EQUIPMENT SPECIFIED IN THIS MANUAL, ONLY LICENSED PERSONNEL SHOULD SERVICE THE EQUIPMENT. IMPROPER SUPERVISION, INSTALLATION, ADJUSTMENT, SERVICING, MAINTENANCE OR REPAIR OF THE EQUIPMENT SPECIFIED IN THIS MANUAL, OR ATTEMPTING TO INSTALL, ADJUST, SERVICE OR REPAIR THE EQUIPMENT SPECIFIED IN THIS MANUAL WITHOUT PROPER SUPERVISION OR TRAINING MAY RESULT IN PRODUCT DAMAGE, PROPERTY DAMAGE, PERSONAL INJURY OR DEATH.

WARNING

DO NOT BYPASS SAFETY DEVICES

NOTICE

If an "Ed" error is encountered on startup, verify that the electric heater DIP switches have been set to the appropriate heater size. See Tables 9 and 10 for the heater kit airflow delivery and DIP switch settings.

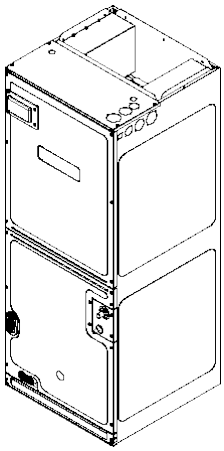

IOD-4018N
04/2023

Our continuing commitment to quality products may mean a change in specifications without notice.

© 2015-2019, 2021-2023 ***DAIKIN COMFORT TECHNOLOGIES MANUFACTURING, L.P.***

19001 Kermier Rd., Waller, TX 77484

www.daikincomfort.com

1 IMPORTANT SAFETY INSTRUCTIONS

The following symbols and labels are used throughout this manual to indicate immediate or potential safety hazards. It is the owner's and installer's responsibility to read and comply with all safety information and instructions accompanying these symbols. Failure to heed safety information increases the risk of personal injury, property damage, and/or product damage.

NOTICE: THIS PRODUCT CONTAINS ELECTRONIC COMPONENTS WHICH REQUIRE A DEFINITE GROUND. PROVISIONS ARE MADE FOR CONNECTION OF THE GROUND. A DEDICATED GROUND FROM THE MAIN POWER SUPPLY OR AN EARTH GROUND MUST BE PROVIDED

WARNING

HIGH VOLTAGE

DISCONNECT ALL POWER BEFORE SERVICING OR INSTALLING THIS UNIT. MULTIPLE POWER SOURCES MAY BE PRESENT. FAILURE TO DO SO MAY CAUSE PROPERTY DAMAGE, PERSONAL INJURY OR DEATH.

CAUTION

TO PREVENT THE RISK OF PROPERTY DAMAGE, PERSONAL INJURY, OR DEATH, DO NOT STORE COMBUSTIBLE MATERIALS OR USE GASOLINE OR OTHER FLAMMABLE LIQUIDS OR VAPORS IN THE VICINITY OF THIS UNIT.

WARNING

TO AVOID PROPERTY DAMAGE, PERSONAL INJURY OR DEATH DUE TO ELECTRICAL SHOCK, THIS UNIT MUST HAVE AN UNINTERRUPTED, UNBROKEN ELECTRICAL GROUND. THE ELECTRICAL GROUND CIRCUIT MAY CONSIST OF AN APPROPRIATELY SIZED ELECTRICAL WIRE CONNECTING THE GROUND LUG IN THE UNIT CONTROL BOX TO THE BUILDING ELECTRICAL SERVICE PANEL.
OTHER METHODS OF GROUNDING ARE PERMITTED IF PERFORMED IN ACCORDANCE WITH THE NATIONAL ELECTRIC CODE (NEC)/ AMERICAN NATIONAL STANDARDS INSTITUTE (ANSI)/NATIONAL FIRE PROTECTION ASSOCIATION (NFPA) 70 AND LOCAL/STATE CODES. IN CANADA, ELECTRICAL GROUNDING IS TO BE IN ACCORDANCE WITH THE CANADIAN ELECTRIC CODE (CSA) C22.1.

CAUTION

WHEN INSTALLING OR SERVICING THIS EQUIPMENT, SAFETY CLOTHING, INCLUDING HAND AND EYE PROTECTION, IS STRONGLY RECOMMENDED. IF INSTALLING IN AN AREA THAT HAS SPECIAL SAFETY REQUIREMENTS (HARD HATS, ETC.), OBSERVE THESE REQUIREMENTS.

WARNING

This product is factory-shipped for use with 208/240/1/60 electrical power supply. DO NOT reconfigure this air handler to operate with any other power supply.

WARNING

Do not connect to or use any device that is not design certified by the manufacturer for use with this unit. Serious property damage, personal injury, reduced unit performance and/or hazardous conditions may result from the use of such non-approved devices.

DANGER
PELIGRO

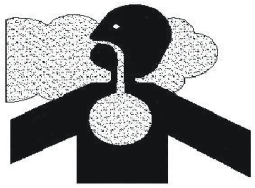

CARBON MONOXIDE POISONING HAZARD

Special Warning for Installation of Furnace or Air Handling Units in Enclosed Areas such as Garages, Utility Rooms or Parking Areas

Carbon monoxide producing devices (such as an automobile, space heater, gas water heater, etc.) should not be operated in enclosed areas such as unventilated garages, utility rooms or parking areas because of the danger of carbon monoxide (CO) poisoning resulting from the exhaust emissions. If a furnace or air handler is installed in an enclosed area such as a garage, utility room or parking area and a carbon monoxide producing device is operated therein, there must be adequate, direct outside ventilation.

This ventilation is necessary to avoid the danger of CO poisoning which can occur if a carbon monoxide producing device continues to operate in the enclosed area. Carbon monoxide emissions can be (re)circulated throughout the structure if the furnace or air handler is operating in any mode.

CO can cause serious illness including permanent brain damage or death. B10259-216

RIESGO DE INTOXICACIÓN POR MONÓXIDO DE CARBONO

Advertencia especial para la instalación de calentadores ó manejadoras de aire en áreas cerradas como estacionamientos ó cuartos de servicio.

Los equipos ó aparatos que producen monóxido de carbono (tal como automóvil, calentador de gas, calentador de agua por medio de gas, etc) no deben ser operados en áreas cerradas debido al riesgo de envenenamiento por monóxido de carbono (CO) que resulta de las emisiones de gases de combustión. Si el equipo ó aparato se opera en dichas áreas, debe existir una adecuada ventilación directa al exterior.

Esta ventilación es necesaria para evitar el peligro de envenenamiento por CO, que puede ocurrir si un dispositivo que produce monóxido de carbono sigue operando en el lugar cerrado.

Las emisiones de monóxido de carbono pueden circular a través del aparato cuando se opera en cualquier modo.

El monóxido de carbono puede causar enfermedades severas como daño cerebral permanente ó muerte. B10259-216

RISQUE D'EMPOISONNEMENT AU MONOXYDE DE CARBONE

Avertissement special au sujet de l'installation d'appareils de chauffage ou de traitement d'air dans des endroits clos, tets les garages, les locaux d'entretien et les stationnements.

Evitez de mettre en marche les appareils produisant du monoxyde de carbone (tels que les automobile, les appareils de chauffage autonome,etc.) dans des endroits non ventilés tels que les d'empoisonnement au monoxyde de carbone. Si vous devez faire fonctionner ces appareils dans un endroit clos, assures-vous qu'il y ait une ventilation directe provenant de l'exterier.

Cette ventilation est nécessaire pour éviter le danger d'intoxication au CO pouvant survenir si un appareil produisant du monoxyde de carbone continue de fonctionner au sein de la zone confinée.

Les émissions de monoxyde de carbone peuvent etre recircules dans les endroits clos, si l'appareil de chauffage ou de traitement d'air sont en marche.

Le monoxyde de carbone peut causer des maladies graves telles que des dommages permanents au cerveau et meme la mort. B10259-216

WARNING

Failure to properly reconnect sensor wires may result in Error codes and the unit not operating.

2 SHIPPING INSPECTION

Always transport the unit upright; laying the unit on its side or top during transit may cause equipment damage. The installer should inspect the product upon receipt for shipping damage and subsequent investigation is the responsibility of the carrier. The installer must verify the model number, specifications, electrical characteristics, and accessories are correct prior to installation. The distributor or manufacturer will not accept claims from dealers for transportation damage or installation of incorrectly shipped units.

2.1 Parts

Also inspect the unit to verify all required components are present and intact. Report any missing components immediately to Daikin or to the distributor. Use only factory authorized replacement parts (see Section 4). Make sure to include the full product model number and serial number when reporting and/or obtaining service parts.

2.2 Handling

Use caution when transporting/carrying the unit. Do not move unit using shipping straps. Do not carry unit with hooks or sharp objects. The preferred method of carrying the unit after arrival at the job site is to carry via a two-wheel hand truck from the back or sides or via hand by carrying at the cabinet corners.

3 CODES & REGULATIONS

This product is designed and manufactured to comply with applicable national codes. Installation in accordance with such codes and/or prevailing local codes/regulations is the responsibility of the installer. The manufacturer assumes no responsibility for equipment installed in violation of any codes or regulations.

The United States Environmental Protection Agency (EPA) has issued various regulations regarding the introduction and disposal of refrigerants. Failure to follow these regulations may harm the environment and can lead to the imposition of substantial fines. Should you have any questions please contact the local office of the EPA and/or refer to EPA's website www.epa.gov.

4 REPLACEMENT PARTS

When reporting shortages or damages, or ordering repair parts, give the complete product model and serial numbers as stamped on the product. Replacement parts for this product are available through your contractor or local distributor. For the location of your nearest distributor consult the white business pages, the yellow page section of the local telephone book or contact:

HOMEOWNER SUPPORT
DAIKIN NORTH AMERICA LLC
190001 KERMIER ROAD
WALLER, TEXAS 77484
855-770-5678

5 PRE-INSTALLATION CONSIDERATIONS

5.1 Preparation

Keep this document with the unit. Carefully read all instructions for the installation prior to installing product. Make sure each step or procedure is understood and any special considerations are taken into account before starting installation. Assemble all tools, hardware and supplies needed to complete the installation. Some items may need to be purchased locally. Make sure everything needed to install the product is on hand before starting.

5.2 System Matches

The entire system (combination of indoor and outdoor sections) must be manufacturer approved and Air-Conditioning, Heating, and Refrigeration Institute (AHRI) listed. **NOTE:** Installation of unmatched systems is not permitted. Damage or repairs due to installation of unmatched systems is not covered under the warranty.

5.3 Interconnecting Tubing

Give special consideration to minimize the length of refrigerant tubing when installing air handlers. Refer to outdoor AIR CONDITIONING OR HEAT PUMP INSTALLATION & SERVICE REFERENCE for line set configuration guidelines. If possible, allow adequate length of tubing such that the coil may be removed (for inspection or cleaning services) from the cabinet without disconnecting the tubing.

5.4 Clearances

The unit clearance from a combustible surface may be 0". However, service clearance must take precedence. A minimum of 24" in front of the unit for service clearance is required. Additional clearance on one side or top will be required for electrical wiring connections. Consult all appropriate regulatory codes prior to determining final clearances. When installing this unit in an area that may become wet (such as crawl spaces), elevate the unit with a sturdy, non-porous material. In installations that may lead to physical damage (i.e. a garage) it is advised to install a protective barrier to prevent such damage. Always install units such that a positive slope in condensate line (1/4" per foot) is allowed.

5.5 Horizontal Applications

If installed above a finished living space, a secondary drain pan (as required by many building codes), must be installed under the entire unit and its condensate drain line must be routed to a location such that the user will see the condensate discharge.

5.6 Access

This unit should be installed in a manner so that it is **NOT** accessible to the public.

6 INSTALLATION LOCATION

NOTE: These air handlers are designed for indoor installation only at a max altitude of 10,500 feet above sea level or a min altitude of -184 feet below sea level.

If the unit is located in an unconditioned area with high ambient temperature and/or high humidity, the air handler may be subject to nuisance sweating of the casing. On these installations, a wrap of 2" fiberglass insulation with a vapor barrier is recommended. A secondary drain pan below the unit is also recommended to protect the installation site.

This product line may be installed in one of the upflow, downflow, horizontal left or horizontal right orientations as shown in Figures 3, 4, 5 and 6. The unit may be installed in horizontal left orientation as shipped (refer to specific sections for more information).

6.1 Upflow and Downflow Installation (Figure 3 & 4)

1. Remove blower access panel and coil access panel. The coil access panel and tubing panel may remain screwed together during this procedure. Remove and retain the seven (7) screws securing the coil access panel to the cabinet and the six (6) screws securing the blower access panel to the cabinet.
2. Before removing the coil remove the wire ties holding the sensor wire harness to the center support. Remove the insulation covering the wire connectors and disconnect the wires. Do not cut or damage the insulation covering the junction connectors since it will be required to secure the wires once the change is complete. See Figures 201 and 2-2 for wire tie location.
3. Slide the coil assembly out from the cabinet. Use the drain pan to pull the assembly from the cabinet.

IMPORTANT: Do not use manifolds, copper lines, or the flowrator to pull the coil assembly out. Failure to do so may result in braze joint damage and leaks.

4. Removal of the center support is required on units with 21" wide cabinet. Remove and retain the two (2) screws that secure the center support to the cabinet. Remove the center support.
5. **The horizontal drip shield, side drain pan, and drain pan extension must be removed. Follow the "Side Drain Pan and Extension Removal Instructions".**
6. **For Upflow Installation:**
   a. Using the drain pan to hold the coil assembly, slide the coil assembly back into the cabinet.
   b. Reinstall the center support (if removed) using the two (2) screws removed in Step 3.
   c. Reconnect the sensor wires and replace the insulation securing it with wire ties on both sides as shown in Figure 2-2. Then secure the wire harness to the corner post using the screw mount wire ties provided.
   d. Reinstall the coil access panels and reinstall blower access panel removed in Step 1 as shown in Figure 9.
7. **For Downflow Installation:**
   a. Position the unit in the downflow position.
   b. Using the drain pan to hold the coil assembly, slide the coil assembly back into the cabinet on the downflow brackets as shown in Figure 9.
   c. Reinstall the center support (if removed) using the two (2) screws removed in Step 3.
   d. Reconnect the sensor wires and replace the insulation securing it with wire ties on both sides as shown in Figure 2-2. Then secure the wire harness to the corner post using the screw mount wire ties provided.
   e. Reinstall the coil access panels and reinstall blower access panel removed in Step 1 as shown in Figure 10.

Side Drain Pan and Extension Removal Instructions

Refer to Figure 1, remove the two (2) screws that secure the drip shield support brackets to the condensate collectors (front and back). Unsnap the side drain pan from the bottom drain pan using a screwdriver or any small lever. The side drain pan, drip shield brackets and the drain pan extension may now be removed. From Figure 1, drain port labeled (A) is the primary drain for this application and condensate drain line must be attached to this drain port. Drain port (a) is for the secondary drain line (if used). When the side drain pan is removed, the drain port opening in the access panel must be covered by the accessory drain port plug (DPK1) as shown in Figure 1-1.

DRAIN PORT PLUG		
Kit Number	**Description**	**Application**
DPK1	Side Drain Port Plug	All Models

DRAIN PORT PLUG KIT
Table 1

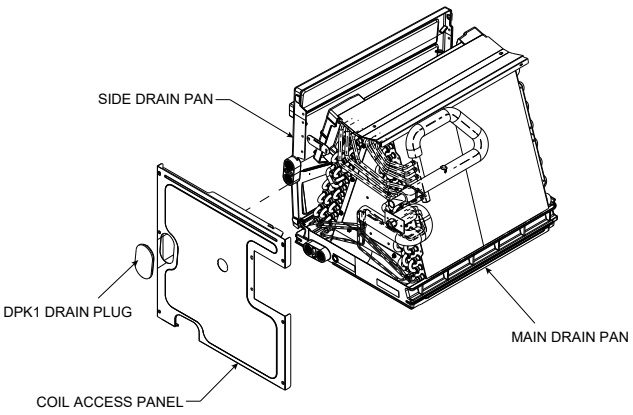

DRAIN PAN
Figure 1-1

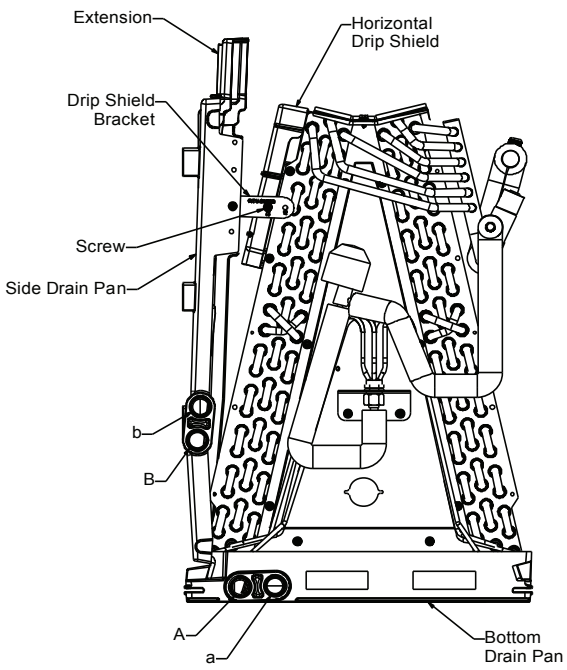

SIDE DRAIN PAN REMOVAL
Figure 1

6.2 Horizontal Left Installation (Figure 5)

No field modifications are permissible for this application. Install unit as shown in Figure 5.

Drain port labeled (B) in Figure 1 is the primary drain for this application and condensate drain line must be attached to this drain port. Drain port (b) is for the secondary drain line (if used).

Remove red plugs from side drain pan before connecting condensate drain pipes. Use removed plug to close drain ports on vertical drain pan.

6.3 Horizontal Right Installation (Figure 6)

1. Remove blower access panel and coil access panel. The coil access panel and tubing panel may remain screwed together during this procedure. Remove and retain the seven (7) screws securing the coil access panel to the cabinet and the six (6) screws securing the blower access panel to the cabinet.
2. Before removing the coil remove the wire ties holding the sensor wire harness to the center support. Remove the insulation covering the wire connectors and disconnect the wires. Do not cut or damage the insulation covering the junction connectors since it will be required to secure the wires once the change is complete. See Figures 201 and 2-2 for wire tie location.
3. Slide the coil assembly out from the cabinet. Use the drain pan to pull the assembly from the cabinet.

NOTE: DO NOT USE MANIFOLDS OR FLOWRATOR TO PULL THE COIL ASSEMBLY OUT. FAILURE TO DO SO MAY RESULT IN BRAZE JOINT DAMAGE AND LEAKS.

4. Removal of the center support is required on units with 21” wide cabinet. Remove and retain the two (2) screws that secure the center support to the cabinet. Remove the center support.
5. Position the unit in the downflow position.
6. Remove side drain pan extension if present.
7. Using the drain pan to hold the coil assembly, slide the coil assembly back into the cabinet on the downflow brackets as shown in Figure 8.
8. Reinstall the center support (if removed) using the two (2) screws removed in Step 5.
9. Reconnect the sensor wires and replace the insulation securing it with wire ties on both sides as shown in Figure 2-2. Then secure the wire harness to the corner post using the screw mount wire ties provided.
10. Reinstall the coil access panels and reinstall blower access panel removed in Step 1 as shown in Figure 10.
11. Drain Connections for Horizontal Right Installation

    a. Drain port labeled (B) in Figure 1 is the primary drain for this application and condensate drain line must be attached to this drain port. Drain port (b) is for the secondary drain line (if used).

    b. Remove red plugs from side drain pan before connecting condensate drain pipes. Use removed plug to close drain ports on vertical drain pan.

CMK0008 Condensate Kit	CMK0009 Condensate Kit	CMK0010 Condensate Kit	CMK0011 Condensate Kit
DV25PECB14	DV37PECC14	DV59PECD14	DV61PECD14

CMK0012 Condensate Kit	CMK0013 Condensate Kit	CMK0014 Condensate Kit
DV24FECB14	DV36FECC14 DV42FECC14 DV35FECC14	DV48FECD14 DV60FECD14 DV47FECD14 DV59FECD14

CONDENSATE KIT
Table 2

DFK-B Downflow Kit	DFK-C Downflow Kit	DFK-D Downflow Kit	
DV25PECB14	DV37PECC14	DV59PECD14	DV61PECD14

DFKE-02 Downflow Kit
DV24FECB14
DV36FECC14
DV42FECC14
DV48FECD14
DV60FECD14
DV35FECC14
DV47FECD14
DV59FECD14

DOWNFLOW KIT
Table 3

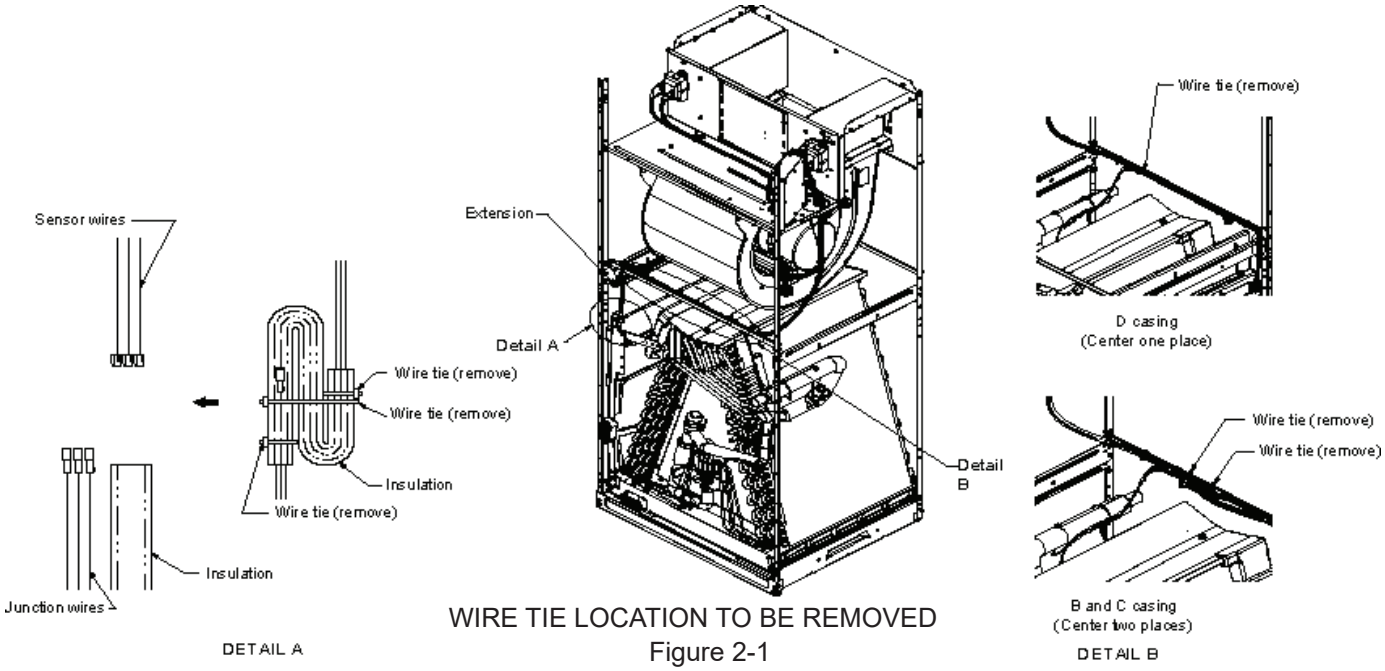

WIRE TIE LOCATION TO BE REMOVED
Figure 2-1

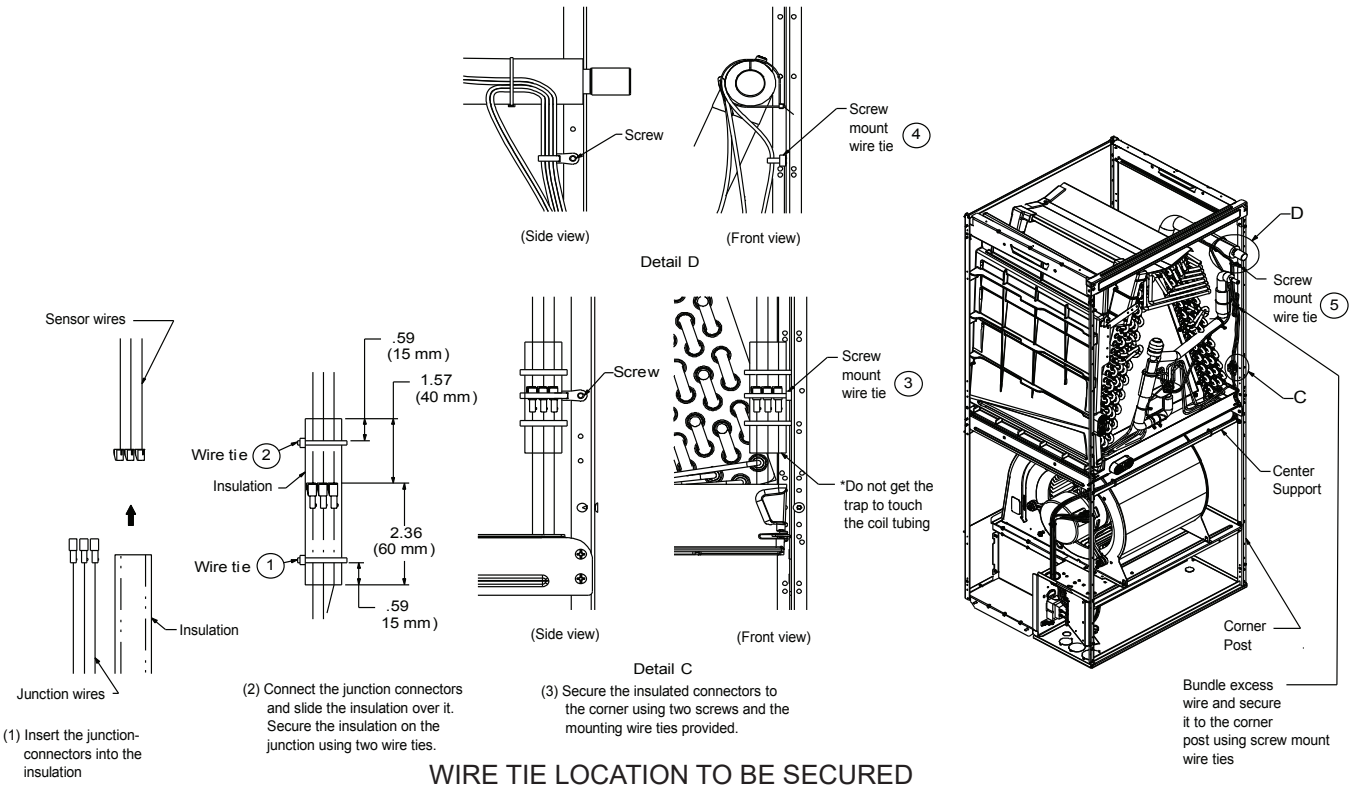

WIRE TIE LOCATION TO BE SECURED
Figure 2-2

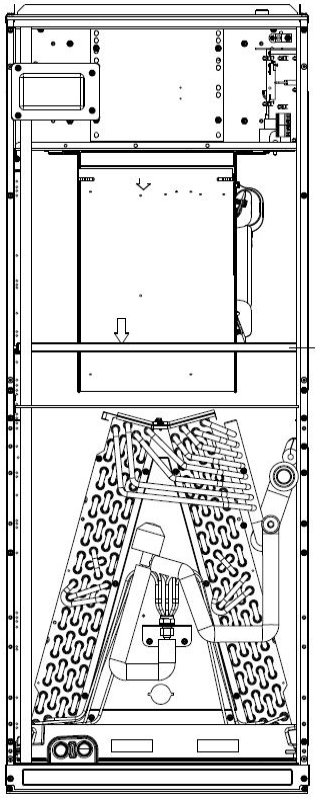

UPFLOW

Figure 3

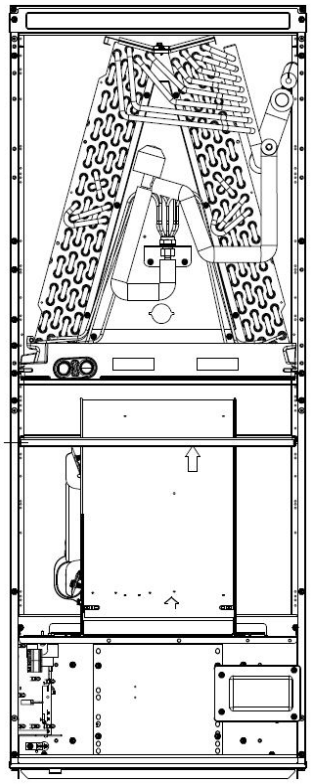

DOWNFLOW

Figure 4

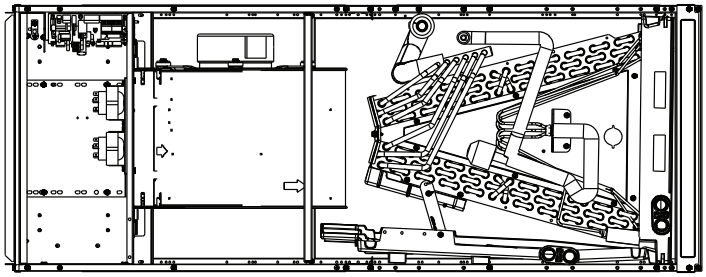

HORIZONTAL LEFT

Figure 5

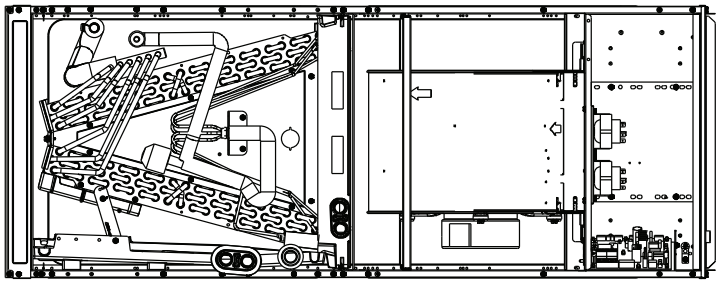

HORIZONTAL RIGHT

Figure 6

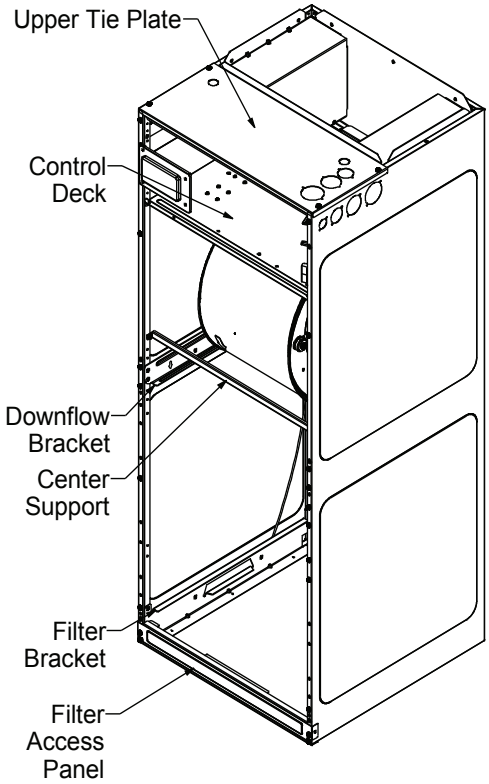

INTERNAL PART TERMINOLOGY

Figure 7

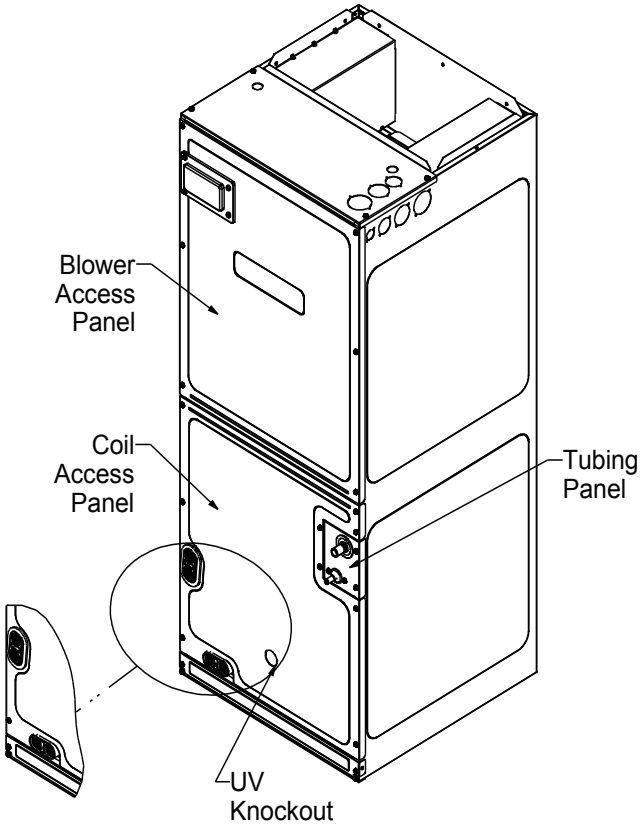

EXTERNAL PART TERMINOLOGY

Figure 8

NOTE: If removing only the coil access panel from the unit, the filter access panel must be removed first. Failure to do so may result in panel damage.

7 REFRIGERANT LINES

NOTE: Care should be taken to route refrigerant tubing in a way which allows adequate access for servicing and maintenance of the air handling unit.

WARNING

This product is factory-shipped with R410A and dry nitrogen mixture gas under pressure. Use appropriate service tools and follow these instructions to prevent injury.

WARNING

A quenching cloth is strongly recommended to prevent scorching or marring of the equipment finish when brazing close to the painted surfaces. Use brazing alloy of 2% minimum silver content.

7.1 Tubing Size

For the correct tubing size, refer to the outdoor AIR CONDITIONING OR HEAT PUMP INSTALLATION & SERVICE REFERENCE.

7.2 Tubing Preparation

All cut ends are to be round, burr free, and clean. Failure to follow this practice increases the chances for refrigerant leaks. The suction line is spun closed and requires tubing cutters to remove the closed end.

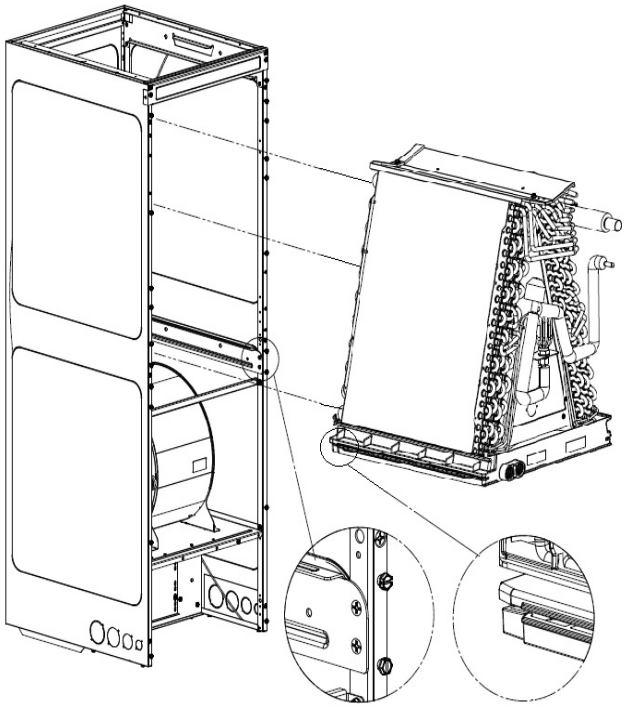

COIL INSTALLATION FOR DOWNFLOW

Figure 9

CAUTION

Applying too much heat to any tube can melt the tube. Torch heat required to braze tubes of various sizes must be proportional to the size of the tube. Service personnel must use the appropriate heat level for the size of the tube being brazed.

NOTE: To prevent possible damage to the tubing joints, do not handle coil assembly with manifold or flowrator tubes. Always use clean gloves when handling coil assemblies.

NOTE: The use of a heat shield is strongly recommended when brazing to avoid burning the serial plate or the finish of the unit. Heat trap or wet rags must be used to protect heat sensitive components such as service valves, electronic expansion valve (EEV), thermistors and pressure sensors.

7.3 Tubing Connections

EEV Series Air Handler models come with factory installed electronic expansion valve (EEV) pre-installed on the liquid tube.

1 Remove refrigerant tubing panel or coil (lower) access panel.

2. Remove access valve fitting cap and depress the valve stem in access fitting to release pressure. No pressure indicates possible leak.
3. Replace the refrigerant tubing panel.
4. Remove the spin closure on both the liquid and suction tubes using a tubing cutter.
5. Insert liquid line set into liquid tube expansion and slide grommet about 18” away from braze joint.
6. Insert suction line set into suction tube expansion and slide insulation and grommet about 18” away from braze joint.
7. Braze joints. Quench all brazed joints with water or a wet rag upon completion of brazing.
8. Replace access panels, suction line grommet, insulation and all screws.

NOTE: The use of a heat shield is strongly recommended when brazing to avoid burning the serial plate or the finish of the unit. Heat trap or wet rags must be used to protect heat sensitive components such as service valves, electronic expansion valve (EEV), thermistors and pressure sensors.

8 CONDENSATE DRAIN LINES

The coil drain pan has a primary and a secondary drain with 3/4” NPT female connections. The connectors required are 3/4” NPT male, either PVC or metal pipe, and should be hand tightened to a torque of no more than 37 in-lbs. to prevent damage to the drain pan connection. An insertion depth of approximately 3/8” to 1/2” (3-5 turns) should be expected at this torque.

1. Ensure drain pan hole is not obstructed.
2. To prevent potential sweating and dripping on to finished

space, it may be necessary to insulate the condensate drain line located inside the building. Use Armaflex® or similar material.

A secondary condensate drain connection has been provided for areas where the building codes require it. Pitch all drain lines a minimum of 1/4" per foot to provide free drainage. Provide required support to the drain line to prevent bowing. If the secondary drain line is required, run the line separately from the primary drain and end it where condensate discharge can be easily seen.

NOTE: Water coming from secondary line means the coil primary drain is plugged and needs immediate attention.

Insulate drain lines located inside the building or above a finished living space to prevent sweating. Install a condensate trap to ensure proper drainage.

NOTE: When units are installed above ceilings, or in other locations where damage from condensate overflow may occur, it is **MANDATORY** to install a field fabricated auxiliary drain pan under the coil cabinet enclosure.

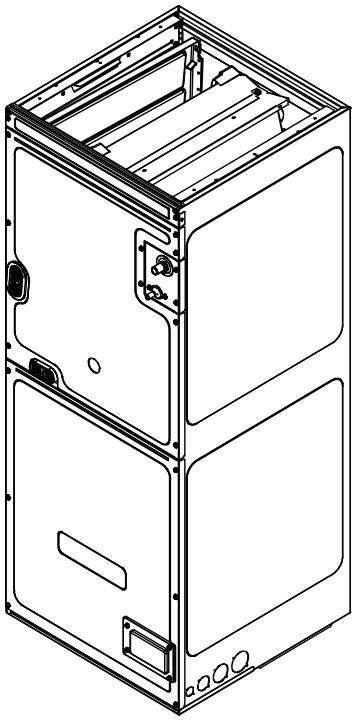

ACCESS PANEL CONFIGURATION FOR DOWNFLOW OR HORIZONTAL RIGHT

Figure 10

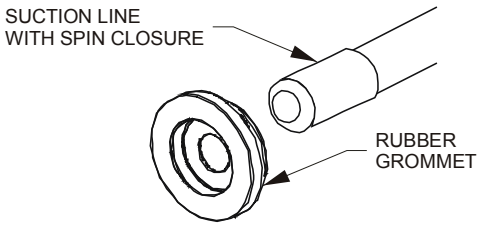

SUCTION LINE GROMMET

Figure 11

The installation must include a "P" style trap that is located as close as is practical to the indoor unit coil. See Figure 12 for details of a typical condensate line "P" trap.

NOTE: Units operating in high static pressure applications may require a deeper field constructed "P" style trap than is shown in Figure 12 to allow proper drainage and prevent condensate overflow.

NOTE: Trapped lines are required by many local codes. In the absence of any prevailing local codes, please refer to the requirements listed in the Uniform Mechanical Building Code.

A drain trap in a **draw-through** application prevents air from being drawn back through the drain line during fan operation thus preventing condensate from draining, and if connected to a sewer line to prevent sewer gases from being drawn into the airstream during blower operation.

Use of a condensate removal pump is permitted when necessary. This condensate pump should have provisions for shutting off the control voltage should a blocked drain occur. See Auxiliary Alarm Switch section for more details. A trap must be installed between the unit and the condensate pump.

IMPORTANT NOTE: The evaporator coil is fabricated with oils that may dissolve styrofoam and certain types of plastics. Therefore, a removal pump or float switch must not contain any of these materials.

9 DUCTWORK

CAUTION

Do not operate this product without all the ductwork attached.

This air handler is designed for a complete supply and return ductwork system.

To ensure correct system performance, the ductwork is to be sized to accommodate 350-450 CFM per ton of cooling with the static pressure not to exceed 0.5" in w.c. Refer to ACCA Manual D, Manual S and Manual RS for information on duct sizing and application. Flame retardant ductwork is to be used and sealed to the unit in a manner that will prevent leakage.

NOTE: A downflow application with electric heat must have an L-shaped sheet metal supply duct without any outlets or registers located directly below the heater.

9.1 Return Ductwork

DO NOT LOCATE THE RETURN DUCTWORK IN AN AREA THAT CAN INTRODUCE TOXIC, OR OBJECTIONABLE FUMES/ODORS INTO THE DUCTWORK. The return ductwork is to be connected to the air handler bottom (upflow configuration).

10 RETURN AIR FILTERS

Each installation must include a return air filter. This filtering may be performed at the air handler using the factory filter rails or externally such as a return air filter grille. When using the factory filter rails, a nominal 16x20x1", 20x20x1" or 24x20x1" (actual dimension must be less than 23-½"x20") filter can be installed on a B, C and D cabinet respectively (the cabinet size is the seventh letter of the model number). Washable

versions are available through your local Daikin distributor.

11 ELECTRIC HEAT

Refer to the installation manual provided with the electric heat kit for the correct installation procedure. All electric heat must be field installed. If installing this option, the ONLY heat kits that are permitted to be used are the Daikin produced HKS series. Refer to the air handler unit's Serial and Rating plate or the HKS specification sheets to determine the heat kits compatible with a given air handler. No other accessory heat kit besides the HKS series may be installed in these air handlers.

NOTE: TRANSFORMER SUB-ASSEMBLY

Before installing the Heat Kit, uninstall the transformer sub-assembly (Figure 13). Make sure to unplug 12-Pin connector before uninstalling the uninstalling the transformer sub-assembly. Follow the Heat Kit Installation Manual to install the Heat Kit. Install transformer sub-assembly back to the unit (Figure 13). Plug in 12-Pin connectors and secure screws while installing transformer sub-assembly back to the unit after heater kit installation.

The heating mode temperature rise is dependent upon the system airflow, the supply voltage, and the heat kit size (kW) selected. Use data provided in Tables 4, 5 and 6 to determine the temperature rise (°F).

NOTE: For emergency heat, set the dipswitch on PCB. For heating mode, use the thermostast user menu.

For installations not indicated above the following formula is to be used:

TR = (kW x 3412) x (Voltage Correction) / (1.08 x CFM)

Where:
- TR = Temperature Rise
- kW = Heater Kit Actual kW
- 3412 = Btu per kW
- VC* = 1.0 (240 Supply Volts)
- = .92 (230 Supply Volts)
- = .84 (220 Supply Volts)
- = .77 (210 Supply Volts)
- = .75 (208 Supply Volts)
- 1.08 = Constant
- CFM = Measured Airflow

**VC (Voltage Correction)*

NOTE: The Temperature Rise Tables can also be used to estimate the air handler airflow delivery. When using these tables for this purpose set the room thermostat to maximum heat and allow the system to reach steady state conditions. Insert two thermometers, one in the return air and one in the supply air. The temperature rise is the supply air temperature minus the return air temperature. Using the temperature rise calculated, CFM can be estimated from the TR formula above. See Specification Sheet and/or Service Manual for more information.

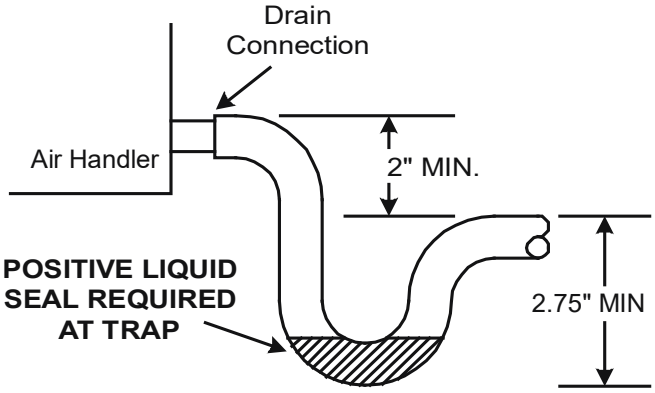

Figure 12

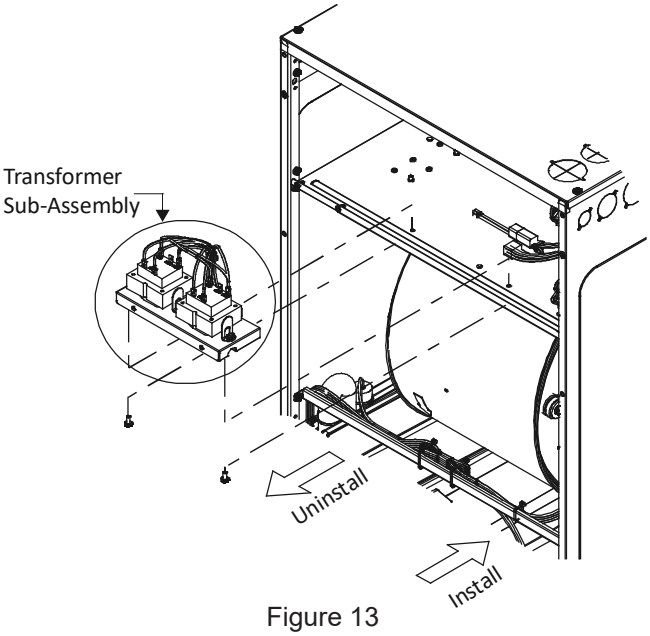

Figure 13

CFM	HEAT KIT NOMINAL KW							
	3	5	6	8	10	15	20	25
800	12	19	24	32	38			
1000	9	15	19	25	30	45		
1200	8	13	16	21	25	38	51	63
1400	7	11	14	18	22	32	43	54
1600	6	9	12	16	19	28	38	47
1800	5	8	11	14	17	25	34	42
2000	5	8	9	13	15	23	30	38

240/1/60 SUPPLY VOLTAGE - TEMP. RISE °F

Table 4

CFM	HEAT KIT NOMINAL KW							
	3	5	6	8	10	15	20	25
800	11	18	23	30	36			
1000	9	15	18	24	29	44		
1200	8	12	15	20	24	36	49	61
1400	6	10	13	17	21	31	42	52
1600	6	9	11	15	18	27	36	45
1800	5	8	10	13	16	24	32	40
2000	5	7	9	12	15	22	29	36

230/1/60 SUPPLY VOLTAGE - TEMP. RISE °F
Table 5

CFM	HEAT KIT NOMINAL KW							
	3	5	6	8	10	15	20	25
800	10	16	21	27	33			
1000	8	13	16	22	26	40		
1200	7	11	14	18	22	33	44	55
1400	6	9	12	16	19	28	38	47
1600	5	8	10	14	16	25	33	41
1800	5	7	9	12	15	22	29	37
2000	4	7	8	11	13	20	26	33

208/1/60 SUPPLY VOLTAGE - TEMP. RISE °F
Table 6

Model	HEATER (kW)								
	3	5	6	8	10	15	19	20	25
DV25PECB14	550	650	700	715	875				
DV24FECB14	550	650	700	715	875				
DV36FECC14	850	850	900	1000	1120	1120	1250		
DV37PECC14	850	850	900	1000	1120	1120	1250		
DV42FECC14	850	850	900	1000	1120	1120	1250		
DV48FECD14	990	990	1110	1200	1240	1520		1520	
DV59PECD14	990	990	1110	1200	1240	1520		1520	
DV60FECD14	1030	1030	1150	1250	1320	1650		1690	1715
DV61PECD14	1030	1030	1150	1250	1320	1650		1690	1715
DV35FECC14	850	850	900	1000	1120	1120	1250		
DV47FECD14	990	990	1110	1200	1240	1520		1520	
DV59FECD14	1030	1030	1150	1250	1320	1650		1690	1715

Table 7

Heat Kit Selection

For heat kit selection, see the Specification Sheet for each specific Air Handler.

12 ELECTRICAL AND CONTROL WIRING

IMPORTANT: All routing of electrical wiring must be made through provided electrical knockouts. When removing the electircal knockouts, take care not to damage the PCB. Do not cut, puncture or alter the cabinet for electrical wiring.

12.1 Building Electrical Service Inspection

This unit is designed for single-phase electrical supply only. DO NOT OPERATE AIR HANDLER ON A THREE-PHASE POWER SUPPLY. Measure the power supply to the unit. The supply voltage **must** be measured and be in agreement with the unit nameplate power requirements and within the range shown.

12.2 Wire Sizing

Wire size is important to the operation of your equipment. Use the following check list when selecting the appropriate wire size for your unit.

- **Wire used must be sized to carry the Minimum Circuit Ampacity (MCA) listed on the equipment's Rating Plate.**
- Refer to the NEC (USA) or CSA (Canada) for wire sizing. The unit MCA for the air handler and the optional electric heat kit can be found on the unit Series and Rating Plate.
- **Wire must be sized to allow no more than a 2% voltage drop from the building breaker/fuse panel to the unit.**
- Wires with different insulation temperature rating have varying ampacities - be sure to check the temperature rating used.

Refer to the latest edition of the National Electric Code or in Canada the Canadian Electric Code when determining the correct wire size.

12.3 Maximum Overcurrent Protection (MOP)

Every installation must include an NEC (USA) or CEC (Canada) approved overcurrent protection device. Also, check with local or state codes for any special regional requirements. Protection can be in the form of fusing or HACR style circuit breakers. The Series and Rating Plate provides the maximum overcurrent device permissible.

NOTE: Fuses or circuit breakers are to be sized larger than the equipment MCA but not to exceed the MOP.

12.4 Electrical Connections – Supply Voltage

IMPORTANT NOTE: USE COPPER CONDUCTORS ONLY.

Knockouts are provided on the air handler top panel and

sides of the cabinet to allow for the entry of the supply voltage conductors, as shown in Figure 14. If the knock-outs on the cabinet sides are used for electrical conduit, an adapter ring must be used in order to meet UL1995 safety requirements. An NEC or CEC approved strain relief is to be used at this entry point. Some codes/ municipalities require the supply wire to be enclosed in conduit. Consult your local codes.

12.4.1 Air Handler Only (Non-Heat Kit Models)

The power supply connects to the stripped black and red wires contained in the air handler electrical compartment. Attach the supply wires to the air handler conductors as shown in the unit wiring diagram using appropriately sized solderless connectors or other NEC or CEC approved means. A ground lug is also provided in the electrical compartment. The ground wire from the power supply must be connected to this ground lug.

12.4.2 Air Handler - Non-Circuit Breaker Heat Kits

A terminal block is provided with the HKS kit to attach the power supply and air handler connections. Follow the HKS Installation Manual and wiring diagram for complete wiring details.

12.4.3 Air Handler With Circuit Breaker Heat Kit

The air handler has a soft plastic cover on the upper access panel and can be removed to allow the heater kit circuit breaker to be installed. The circuit breakers have lugs for power supply connection. See the HKS Installation Instructions for further details.

Nominal Input	Minimum Voltage	Maximum Voltage
208-240	197	253

ELECTRICAL VOLTAGE

Table 8

CAUTION

FIRE HAZARD! To avoid the risk of property damage, personal injury or fire, use only copper conductors.

WARNING

HIGH VOLTAGE

DISCONNECT ALL POWER BEFORE SERVICING OR INSTALLING THIS UNIT. MULTIPLE POWER SOURCES MAY BE PRESENT. FAILURE TO DO SO MAY CAUSE PROPERTY DAMAGE, PERSONAL INJURY OR DEATH.

WARNING

HIGH VOLTAGE

TO AVOID PROPERTY DAMAGE, PERSONAL INJURY OR DEATH DUE TO ELECTRICAL SHOCK, THIS UNIT MUST HAVE AN UNINTERRUPTED, UNBROKEN ELECTRICAL GROUND. THE ELECTRICAL GROUND CIRCUIT MAY CONSIST OF AN APPROPRIATELY SIZED ELECTRICAL WIRE CONNECTING THE GROUND LUG IN THE UNIT CONTROL BOX TO THE BUILDING ELECTRICAL SERVICE PANEL.

OTHER METHODS OF GROUNDING ARE PERMITTED IF PERFORMED IN ACCORDANCE WITH THE NATIONAL ELECTRIC CODE (NEC)/ AMERICAN NATIONAL STANDARDS INSTITUTE (ANSI)/NATIONAL FIRE PROTECTION ASSOCIATION (NFPA) 70 AND LOCAL/STATE CODES. IN CANADA, ELECTRICAL GROUNDING IS TO BE IN ACCORDANCE WITH THE CANADIAN ELECTRIC CODE (CSA) C22.1.

13 ACHIEVING 1.4% AND 2.0% AIRFLOW LOW LEAKAGE RATE

Ensure all the gaskets remain intact on all surfaces as shipped with the unit. These surfaces are areas between the upper tie plate and coil access panel, blower access and coil access panels, and between the coil access and filter access panels. Ensure upon installation, that the plastic breaker cover is sitting flush on the blower access panel and all access panels are flush with each other and the cabinet. With these requirements satisfied, the unit achieves less than 1.4% airflow leakage @ 0.5 inch wc static pressure and less than 2% airflow leakage @1inch wc static pressure when tested in accordance with ASHRAE Standard 193.

IMPORTANT: After installing the heater kits, it is very important to seal the gap between the circuit breaker and the cover. Putty paste or gasket can be used to seal the gap so that air leakage can be minimized.

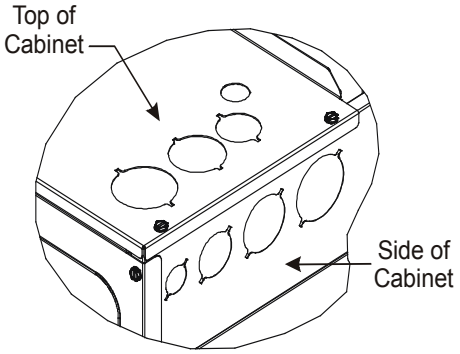

KNOCK-OUT FOR ELECTRICAL CONNECTIONS

Figure 14

14 AIRFLOW TRIM

Indoor airflow can be trimmed up/down through the outdoor unit user menu. For more detailed information, please refer to the outdoor unit installation manual.

- To prevent condensation blow off, positive side trim settings are allowed within the Maximum CFM listed below. The CFM in this table intends actual measured value at installation site. Do not refer to the CFM value in the outdoor spec sheet, displayed in status menu of communication thermostat, or the displayed LEDs on the

PCB, as there may be a tolerance difference between displayed and actual measured.

Maximum Measured CFM Allowed			
	Up-Flow	Down-Flow	HZ-Flow
DV24FECB14	910	870	870
DV36FECC14	1450	1390	1390
DV42FECC14	1520	1450	1450
DV48FECD14	1590	1520	1520
DV60FECD14	1890	1800	1800
DV35FECC14	1450	1390	1390
DV47FECD14	1590	1520	1520
DV59FECD14	1890	1800	1800

15 MISCELLANEOUS START-UP CHECKLIST

- Prior to start-up, ensure that all electrical wires are properly sized and all connections are properly tightened.
- All panels must be in place and secured. For Air Tight application, gasket must be positioned at prescribed locations to achieve 2% leakage.
- Tubing must be leak free.
- Condensate line must be trapped and pitched to allow for drainage.
- Auxiliary drain is installed when necessary and pitched to allow for drainage.
- Low voltage wiring is properly connected.
- Unit is protected from vehicular or other physical damage.
- Return air is not obtained from, nor are there any return air duct joints that are unsealed in, areas where there may be objectionable odors, flammable vapors or products of combustion such as carbon monoxide (CO), which may cause serious personal injury or death.

IMPORTANT NOTE: If thumb screws are used to access the filter, ensure the washer installed on the screw behind the access panel remains in place after re-installation.

NOTE: A removable plug connector is provided with the control to make thermostat wire connections. This plug may be removed, wire connections made to the plug, and replaced. It is **STRONGLY** recommended that you do not connect multiple wires into a single terminal. Wire nuts are recommended to ensure one wire is used for each terminal. Failure to do so may result in intermittent operation.

15.1 Auxiliary Alarm Switch

The control is equipped with two Auxiliary Alarm terminals, labeled TB4 and TB5 which are typically utilized in series with a condensate switch but could also be used with compatible CO_2 sensors or fire alarms.

The auxiliary alarm switch must be normally closed and open when the alarm occurs. For example, a normally closed condensate switch will open when the base pan's water level reaches a particular level. The control will respond by turning off the blower motor and outdoor unit and displaying the proper fault codes. If the switch is later detected closed for 30 seconds, normal operation resumes and the error message is removed. (The switch is closed as part of the default factory setting.) The error will be maintained in the equipment's fault history. See Figures 15 and 16 for the connection location.

15.2 Circulator Blower

This air handler is equipped with a variable speed circulator blower. This blower provides several automatically-adjusted blower speeds. For heater kit installation, it is important to set the capacity of the electric heater at two locations of communication thrermostat and DIP Switch.

Setting with communication thermostat:

For a detailed procedure of thermostat heater kit capacity selection process, please visit the Daikin One website at http://www.daikinone.com

Setting with DIP Switch:

In the event of loss of communication, emergency mode can be activated. In emergency mode operation, heater kit selection will be driven by the DIP Switch (s9, S10, S11 and S12) selection from the control board. Select the DIP Switch settings in accordance with Tables 9 and 10 (see table 9 for valid settings). Indoor blower airflow (CFM) for a particular heater kit selection can be checked with the STATUS menu of communication thermostat or with the 7-segment display on the control board. (See section SETTING THE MODE DISPLAY).

NOTE: Upon start up in communicating mode the circuit board may display an "Ed" error. This is an indication that the DIP switches on the control board need to be configured in accordance with the Electric Heating Airflow Table. Configuring the DIP switches and resetting power to the unit will clear the error code.

⚠ CAUTION

Do not change any other dip switches other than S9 to S12. Incorrect settings may cause any error. For default setting, see Figure 15.

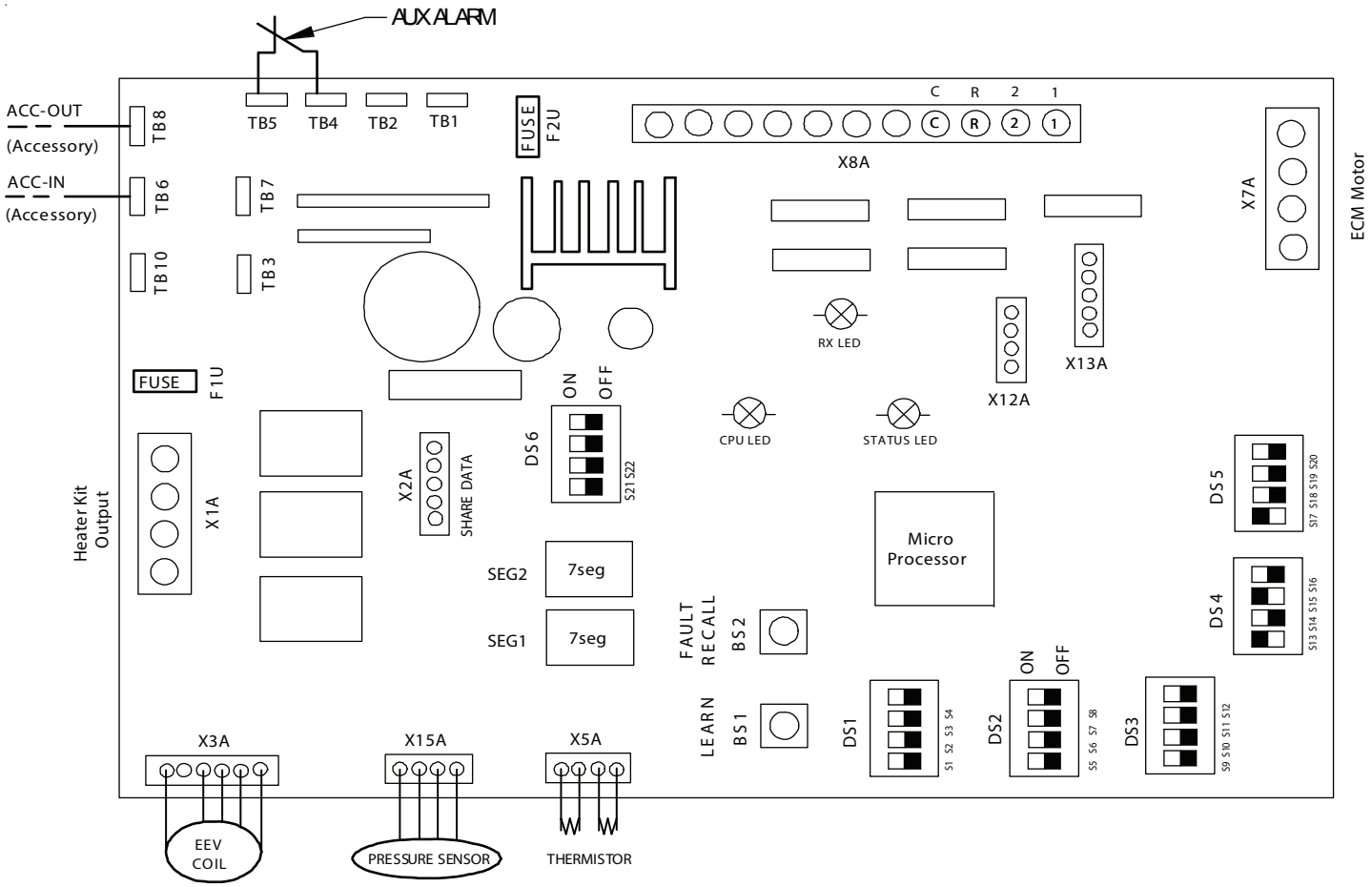

INDOOR UNIT COMMUNICATING BOARD (PCB)

Figure 15

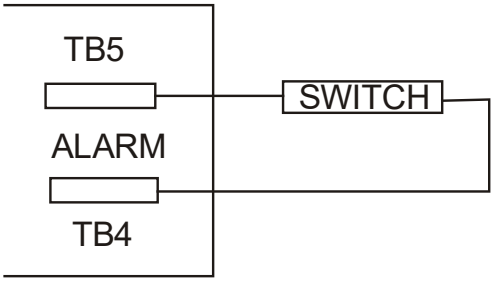

Figure 16

15.3 Motor Orientation

If the unit is in the upflow position, there is no need to rotate the motor. If the unit is in the downflow position, loosen motor mount and rotate motor as shown in the *Motor Orientation,* Figure 17. Be sure motor is oriented with the female connections on the casing down. If the motor is not oriented with the connections down, water could collect in the motor and may cause premature failure.

DV*PEC MODELS

DIP Switch Setting	MODEL			
	DV25PECB14	DV37PECC14	DV59PECD14	DV61PECD14
First Valid Heater Kit	3	3/5	3/5	3/5
Second Valid Heater Kit	5	6	6	6
Third Valid Heater Kit	6	8	8	8
Fourth Valid Heater Kit	8	10	10	10
Fifth Valid Heater Kit	10	15	15	15
Sixth Valid Heater Kit		19	20	20
Seventh Valid Heater Kit				25

DV*FEC MODELS

DIP Switch Setting	MODEL							
	DV24FECB14	DV36FECC14	DV42FECC14	DV48FECD14	DV60FECD14	DV35FECC14	DV47FECD14	DV59FECD14
First Valid Heater Kit	3	3/5	3/5	3/5	3/5	3/5	3/5	3/5
Second Valid Heater Kit	5	6	6	6	6	6	6	6
Third Valid Heater Kit	6	8	8	8	8	8	8	8
Fourth Valid Heater Kit	8	10	10	10	10	10	10	10
Fifth Valid Heater Kit	10	15	15	15	15	15	15	15
Sixth Valid Heater Kit		19	19	20	20	19	20	20
Seventh Valid Heater Kit					25			25

HEATER KIT OPTIONS

Table 9

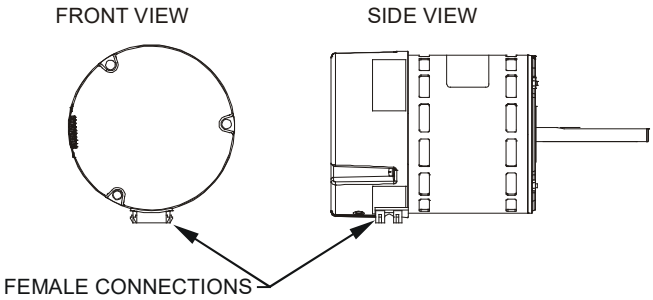

MOTOR ORIENTATION

Figure 17

DIP SWITCH SETTING					
Function	Function	Switch 9 (S9)	Switch 10 (S10)	Switch 11 (S11)	Switch 12 (S12)
Heater Kit Selection	NO Heater Kit	OFF*	OFF*	OFF*	OFF*
	First Valid Heater Kit	ON	ON	ON	ON
	Second Valid Heater Kit	ON	ON	ON	OFF
	Third Valid Heater Kit	ON	ON	OFF	ON
	Fourth Valid Heater Kit	ON	ON	OFF	OFF
	Fifth Valid Heater Kit	ON	OFF	ON	ON
	Sixth Valid Heater Kit	ON	OFF	ON	OFF
	Seventh Valid Heater Kit	ON	OFF	OFF	ON

DIP SWITCH SETTING
Table 10
Note: Default factory settings are marked with *

15.4 Accessory Contacts

The control is equipped with an Accessory Relay and a pair of ¼ inch accessory terminals which is normally open, labeled ACC-IN and ACC-OUT (see accessory contacts graphic). The Accessory Relay can be configured to close with humidification functionality or to close anytime the blower is running. A closed relay means the two terminals will have continuity between them (the control does not energize these contacts). The set-up menu is where this configuration takes place.

Humidifier Relay

For the setup for humidification functionality, the accessory terminals have 3 operational modes.

1. ON: Humidifier is only enabled during a call for heat. During a heat call the accessory relay will close only if there is an active call for humidification from the thermostat. Otherwise, the relay will be open.
2. OFF: Humidifier remains off (relay never closes).
3. IND: Humidifier will cycle with any active call for humidification from the thermostat (independent of a heat call). The relay will remain open during cooling operation. This mode also allows the user to select one of 4 fan speeds (25, 50, 75, and 100%). The fan speed will be used when the system is in an idol state and a call for humidification is made by the thermostat.

16 TROUBLESHOOTING

16.1 Electrostatic Discharge (ESD) Precautions

NOTE: Discharge body's static electricity before touching unit. An electrostatic discharge can adversely affect electrical components.

Use the following precautions during air handler installation and servicing to protect the integrated control module from damage. By putting the air handler, the control, and the person at the same electrostatic potential, these steps will help avoid exposing the integrated control module to electrostatic discharge. This procedure is applicable to both installed and uninstalled (ungrounded) blowers.

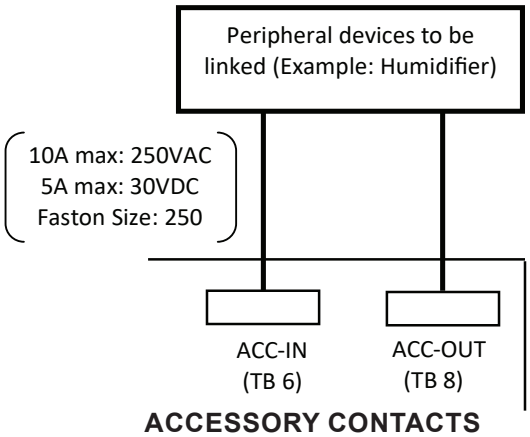

Figure 18

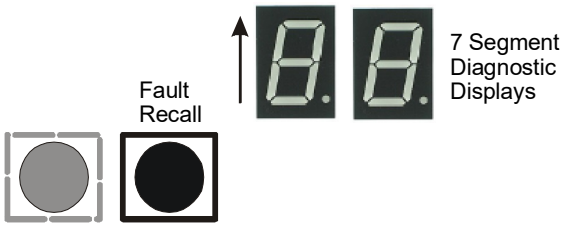

Figure 19

1. Disconnect all power to the blower. Do not touch the integrated control module or any wire connected to the control prior to discharging your body's electrostatic charge to ground.
2. Firmly touch a clean, unpainted, metal surface of the air handler blower near the control. Any tools held in a person's hand during grounding will be discharged.
3. Service integrated control module or connecting wiring following the discharge process in step 2. Use caution not to recharge your body with static electricity; (i.e., do not move or shuffle your feet, do not touch ungrounded objects, etc.). If you come in contact with an ungrounded object, repeat step 2 before touching control or wires.
4. Discharge your body to ground before removing a new control from its container. Follow steps 1 through 3 if installing the control on a blower. Return any old or new controls to their containers before touching any ungrounded object.

16.2 Diagnostic Chart

Refer to the *Troubleshooting Chart* at the end of this manual for assistance in determining the source of unit operational problems. The 7 segment LED display will provide any active fault codes.

16.3 Fault Recall

The integrated control module is equipped with a momentary push-button switch that can be used to display the last six faults on the 7 segment LED display. Follow the sequence to use the feature. The control must be in Standby Mode (no thermostat inputs).

1. Press FAULT RECALL button for 2 to 5 seconds*, so that 7 segment display shows "- -".
2. Release FAULT RECALL button in this period, 7 segment display shows the most recent fault.
3. Each time FAULT RECALL button is pressed after that**, 7 segment display outputs next occurred fault.
4. After displaying the series of recent faults, 7 segment displays blink "- -" and goes back to Standby Mode.

To clear the error code history:

1. Press FAULT RECALL button for 10 to 15 seconds***, so that 7 segment displays blink "- -".
2. Release FAULT RECALL button in this period, 7 segment displays show "88" and faults are cleared.

NOTE:

* If FAULT RECALL button is not pressed long enough (for 2 to 5 seconds), control goes back to Standby Mode.

If the FAULT RECALL button is pressed for 5 to 10 seconds, control goes back to Standby Mode.

** Consecutively repeated faults are displayed a maximum of three times.

*** If FAULT RECALL button is pressed for longer than 15 seconds, control goes back to Standby Mode.

17 FULLY COMMUNICATING DAIKIN SYSTEM

NOTE: For a detailed procedure of thermostat commissioning process, please visit the Daikin *One*+ website at http://www.daikinone.com

17.1 Overview

A fully communicating Daikin system is a system that includes a compatible air handler and air conditioner or heat pump with a communicating thermostat.

A fully communicating Daikin heating/air conditioning system differs from a non-communicating/traditional system in the manner in which the indoor unit, outdoor unit and thermostat interact with one another. In a traditional system, the thermostat sends commands to the indoor and outdoor units via analog 24 VAC signals. It is a one-way communication path. The indoor and outdoor units typically do not return information to the thermostat.

For a fully communicating Daikin system, the indoor unit, outdoor unit, and thermostat "communicate" digitally with one another. It is now a two-way communications path. The thermostat still sends commands to the indoor and outdoor units and may also request and receive information from both the indoor and outdoor units. This information may be displayed on the communicating thermostat. The indoor and outdoor units also interact with one another. The outdoor unit may send commands to or request information from the indoor unit. This two-way digital communications between the thermostat and subsystems (indoor/outdoor unit) is the key to unlocking the benefits and features of the fully comunicating Daikin system.

Two-way digital communications is accomplished using only two wires. The thermostat and air handler controls are powered with 24 VAC. A maximum of 4 wires between the air handler and thermostat is required to operate the system. An inverter equipped outdoor unit does not require 24 VAC. Only the 2 digital communication wires are required between the air handler and inverter unit (pins 1 and 2 on the thermostat connector.)

17.2 Airflow Consideration

Airflow demands are managed differently in a fully communicating system than in a non-communicating wired system. The system operating mode (as determined by the thermostat) determines which unit calculates the system airflow demand. If the indoor unit is responsible for determining the airflow demand, it calculates the demand and sends it to the ECM motor. If the outdoor unit or thermostat is responsible for determining the demand, it calculates the demand and transmits the demand along with a fan request to the indoor unit. The indoor unit then sends the demand to the ECM motor. Table 11 lists the various fully communicating Daikin systems, the operating mode, and airflow demand source.

For example, assume the system is a heat pump matched with an air handler. With a call for low stage cooling, the heat pump will calculate the system's low stage cooling airflow demand. The heat pump will then send a fan request along with the low stage cooling airflow demand to the air handler. Once received, the air handler will send the low stage cooling airflow demand to the ECM motor. The ECM motor then delivers the low stage cooling airflow. See the applicable fully communicating Daikin System air conditioner or heat pump installation manual for the airflow delivered during cooling or heat pump heating.

In continuous fan mode, the communicating thermostat provides the airflow demand. The communicating thermostat provides 4 continuous fan speeds (25%, 50%, 75% and 100% of maximum airflow). During continuous fan operation, the thermostat sends a fan request along with the continuous fan demand to the air handler. The air handler, in turn, sends the demand to the ECM motor. The ECM motor delivers the requested continuous fan airflow.

17.3 Thermostat Wiring

NOTE: Refer to section Electrical Connections for 208/230 volt line connections to the air handler**.**

NOTE: It is **STRONGLY** recommended that no more than two wires be connected in a single terminal. If two wires are used in a terminal, it is recommended the same type of wire be used (i.e. Both stranded or solid for secure connection). Failure to do so may result in intermittent operation.

Typical 18 AWG thermostat wire may be used to wire the system components. Two hundred fifty (250) feet is the maximum of wire between indoor unit and outdoor unit, and one hundred twenty five (125) feet between indoor unit and thermostat.

17.3.1 Two-Wire Outdoor and Four-Wire Indoor Wiring

Typical wiring will consist of two wires between the

System	System Operating Mode	Airflow Demand Source
Air Conditioner + Air Handler	Cooling	Air Conditioner
	Heating	Air Handler
	Continuous Fan	Thermostat
Heat Pump + Air Handler	Cooling	Heat Pump
	Heat Pump Heating Only	Heat Pump
	HP+ Electric Heat Strips	Greater than of Heat Pump of Air Handler Demand
	Electric Heat Strips Only	Air Handler
	Continuous Fan	Thermostat

Table 11

sponding potential problem.

• Learn button – Used to reset the network. Depress the button for approximately 2 seconds to reset the network.

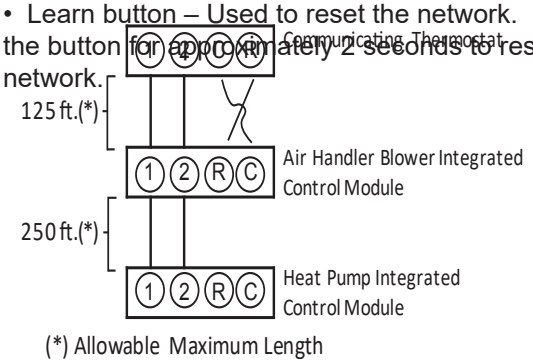

SYSTEM WIRING
Figure 20

ATTENTION INSTALLER - IMPORTANT NOTICE!

Please read carefully before installing this unit.

- Power line terminal #C from Indoor unit must connect to terminal #C on thermostat and power line terminal #R from indoor unit must connect to terminal #R on thermostat. Verify wires are not reversed. (Note:The order of the terminals of the indoor unit and the Daikin One+ thermostat may be different.)
- Do not attach any wires to the R & C Terminals on the AC/HP, as they are not needed for inverter unit.
- Data line terminal #1 from AC/HP must connect to terminal #1 on indoor unit and thermostat and data line terminal #2 from AC/HP must connect to terminal #2 on indoor unit and thermostat. Verify wires are not reversed.

17.5 System Troubleshooting

NOTE: Refer to the instructions accompanying the Communicating compatible outdoor AC/HP unit for unit specific troubleshooting information. Refer to the *Troubleshooting Chart* at the end of this manual for a listing of possible air handler error codes, possible causes and corrective actions.

LED	LED Status	Indication	Possible Causes	Corrective Action(s)	Notes & Cautions
Red Communications LED	Off	• None	• None	• None	• None
	1 Flash	• Communications Failure	• Communications Failure	• Depress Learn Button • Verify wiring connection	• Depress once quickly for a power-up reset • Depress and hold for 5 seconds for an out-of-box reset
	2 Flashes	• Out-of-box reset	• Control power up • Learn button depressed	• None	• None
Green Receive LED	Off	• No power • Communications error	• No power to air handler • Open fuse • Communications error	• Check fuses and circuit breakers; replace/reset • Replace blown fuse • Check for shorts in low voltage wiring in air handler/system • Reset network by depressing learn button • Check data 1/data2 voltages	• Turn power OFF prior to repair
	1 Steady Flash	• No network found	• Broken/ disconnected data wire(s) • Air handler is installed as a non-communicating/ traditional system	• Check communications wiring (data 1/data 2 wires) • Check wire connections at terminal block • Verify air handler installation type (non-communicating/ traditional or communicating) • Check data 1/data 2 voltages	• Turn power OFF prior to repair • Verify wires at terminal blocks are securely twisted together prior to inserting into terminal block • Verify data 1 and data voltages as described above
	Rapid Flashing	• Normal network traffic	• Control is "talking" on network as expected	• None	• None
	On Solid	• Data 1/Data 2 miss-wire	• Data 1/data 2 wires reversed at air handler, thermostat, or ComfortNet™ compatible outdoor AC/HP • Short between data 1/data 2 wires • Short between data 1 or data 2 wires and R (24VAC) or C (24VAC common)	• Check communications wiring (data 1/data 2 wires) • Check wire connections at terminal block • Check data 1/data 2 voltages	• Turn power OFF prior to repair • Verify wires at terminal blocks are securely twisted together prior to inserting into terminal block • Verify data 1 and data voltages as described above

COMMUNICATIONS TROUBLESHOOTING CHART

Error Code	PCB LED Display	Description	Possible Causes	Corrective Actions
EE	No display (EE display is EMG mode)	• No power supply to ID blower / no 24 volt power to PCB • Blown fuse or circuit breaker • PCB has an internal fault	• Manual disconnect switch OFF • No power supply to ID blower / no 24 volt power to PCB • Blown fuse or faulty circuit breaker • Control board has internal fault	• Assure 208/230 volt and 24 volt power to blower and control board. • Check fuse F2U on control board • Check for possible short in 208/230 volt and 24 volt circuits. Repair as necessary. • Replace the control board.
Eb	E_Eb	Selecting "no heater kit" and receiving electric heat demand	• No heater kit selected	• Select the valid heater kit on thermostat • Valid dip switch selection (heater kit selection out of range of the unit configuration)
Ed	E_Ed	Heater Kit dip switches not set properly	• Invalid heater kit selected	• Set correct dip switches
E5	E_E5	Fuse Open	• Fuse (F1U) is blown • Connector TB10 is open	• Replace fuse • Check wiring to AUX alarm, heater kit, communication connection. • Replace the control board *After recovering the system, E5 will still be displayed on the indoor PCB (about 30 seconds). BLOWN FUSE will still be displayed on the thermostat within 45 seconds. They will be cleared automatically.*
EF	E_EF	Auxiliary Switch Open	• High water level in the evaporation coil • The connected alarm device is activated • Auxiliary Alarm terminals (TB4, TB5) are open	• Check water level in drain pan • Check alarm device. • Close Auxiliary terminals TB4 and TB5 if not used *After recovering the system, EF will still be displayed on the indoor PCB (about 30 seconds). AUXILIARY CONTACTS OPEN will still be displayed on the thermostat within 45 seconds. They will be cleared automatically.*
d0	E_d0	Data not on Network	• No shared data on the network	• Populate shared data set using memory card.
d1	E_d1	Invalid Data on Network	• Wrong shared data on the network	• Populate shared data set using memory card.
d4	E_d4	Invalid Memory Card Data	• Wrong memory card data	• Replace circuit board • Rewrite data using the correct memory card
b0	E_b0	Blower Motor not running	• Fan/motor obstruction • Power interruption (low voltage) • Incorrect / loose wiring	• Check for obstruction on the fan/motor • Verify the input voltage at the motor • Check wiring or tighten wiring connections if needed • Replace circuit board or motor
b1	E_b1	Blower Motor Communication error	• Incorrect / loose wiring • Power interruption (low voltage)	• Check wiring or tighten wiring connections if needed • Verify the input voltage at the motor • Replace circuit board or motor
b2	E_b2	Blower Motor HP Mismatch	• Incorrect size motor • Invalid shared data	• Correct motor installation • Populate shared data set using memory card.
b3	E_b3	Blower Motor operating in Power, Temp or Speed Limiting conditions	• Fan/motor obstruction or blocked filters • Power interruption (low voltage) • Incorrect wiring • Blockage in the airflow (ductwork) or ductwork undersized	• Check for obstruction on the fan/motor/ductwork, clean filters • Verify the input voltage at the motor • Check wiring • Replace motor

Error Code	PCB LED Display	Description	Possible Causes	Corrective Actions
b4	E_b4	Blower Motor - Current Trip (or) Lost Rotor	• Fan/motor obstruction or abnormal motor loading • Power interruption (low voltage) • High loading conditions, blocked filters • Blockage in the airflow (ductwork) or ductwork undersized	• Check for obstruction on the fan/motor/ductwork • Verify the input voltage at the motor • Check filters, grills, duct system, coil air inlet/outlet for blockages. • Replace motor
b6	E_b6	• Blower motor stops for over/under voltage • Bower motor stops due to PCB over heating	• High AC line voltage to ID blower • Low AC line voltage to ID blower • High ambient temperatures • Incorrect wiring • Fan/motor obstruction or blockage in the airflow	• Verify line voltage to blower is within the range specified on the ID blower rating plate • See "Installation Instructions" for installation requirements • Check power to air handler blower • Check for obstruction on the fan/motor/ductwork • Check wiring • Replace motor
b7	E_b7	ID blower motor does not have required parameters to function.	• Wrong / no shared data on the network • Locked motor rotor condition	• Check for locked rotor condition (see above error code for details) • Replace circuit board or motor
b9	E_b9	Low Indoor Airflow (without Electric Heat mode)	• Fan/motor obstruction or blocked filters • Restrictive ductwork or ductwork undersized • Wiring disconnected • Wrong outdoor/indoor combination • ID motor failure	• Check for obstruction on the fan/motor • Check ductwork/filter for blockage, clean filters • Remove obstruction. Verify all registers are fully open • Check the connections and the rotation of the motor • Verify the input voltage at the motor • Verify ductwork is appropriately sized for system. Resize/replace ductwork if needed • Replace motor
9b	E_9b	Low Indoor Airflow (with Electric Heat mode)	• Fan/motor obstruction or blocked filters • Restrictive ductwork or ductwork undersized • ID motor failure • Wiring disconnected	• Check for obstruction on the fan/motor • Check ductwork/filter for blockage, clean filters • Remove obstruction. Verify all registers are fully open • Check the connections and the rotation of the motor • Verify the input voltage at the motor • Verify ductwork is appropriately sized for system. Resize/replace ductwork if needed • Replace motor
70	E_70	EEV disconnection detected	• Indoor EEV coil not connected • Incorrect wiring to EEV	• Check Indoor EEV coil connection (PCB and junction connector) • Replace EEV coil • Check the resistance value of EEV coil (refer service manual) • Replace the control board
73	E_73	Liquid side thermistor abnormality	• Open (or) short circuit of the liquid thermistor (X5A) • Liquid thermistor reading incorrect or values outside the normal range	• Check the connection to liquid thermistor (PCB and junction connector) • Check the resistance value of the thermistor (refer service manual) • Replace thermistor • Replace the control board
74	E_74	Gas side thermistor abnormality	• Open (or) short circuit of the gas thermistor (X5A) • Gas thermistor reading incorrect or values outside the normal range	• Check the connection to gas thermistor (PCB and junction connector) • Check the resistance value of the thermistor (refer service manual) • Replace thermistor • Replace the control board
75	E_75	Pressure sensor abnormality	• Open (or) short circuit of the Pressure sensor (X15A) • Pressure sensor reading incorrect or values outside the normal range	• Check the connection to pressure sensor (PCB and junction connector) • Check the output voltage of the pressure sensor (refer service manual) • Replace pressure sensor • Replace the control board
77	E_77	Indoor Unit - Thermostat communication error (start-up & during operation)	• Incorrect wiring between ID unit and thermostat. *The system may have the communication error without error code 77 on the indoor PCB. Follow section 17.5 SYSTEM TROUBLESHOOTING* • Thermostat failure • Power interruption (low voltage)	• Check for thermostat and indoor unit wiring • Verify the input voltage at the ID unit and thermostat *After recovering the system with power supply, TSTAT ID NO COM will continue to be displayed on the thermostat within 2 minutes. The error code will be cleared automatically.* • Replace control board or thermostat • Press "LEARN" button on PCB for more than 5 seconds to reestablish network

DIAGNOSTIC CODES

7 SEGMENT LED DISPLAY	DESCRIPTION OF CONDITION
On	Normal Operation
Eb	NO HTR KIT INSTALLED - SYSTEM CALLING FOR AUXILIARY HEAT (Minor Error Code)
Ed	HEATER KIT DIP SWITCHES NOT SET PROPERLY
ES	FUSE OPEN
EF	AUXILIARY SWITCH OPEN
d0	DATA NOT ON NETWORK
d1	INVALID DATA ON NETWORK
d4	INVALID MEMORY CARD DATA
b0	BLOWER MOTOR NOT RUNNING
b1	BLOWER MOTOR COMMUNICATION ERROR
b2	BLOWER MOTOR HP (Horse power) MISMATCH
b3	BLOWER MOTOR OPERATING IN POWER, TEMP., OR SPEED LIMIT
b4	BLOWER MOTOR CURRENT TRIP OR LOST ROTOR
b6	OVER/UNDER VOLTAGE TRIP OR OVER TEMPERATURE TRIP
b7	INCOMPLETE PARAMETER SENT TO MOTOR
b9	LOW INDOOR AIRFLOW (Minor Error Code) (without EH mode)
9b	LOW INDOOR AIRFLOW (Major Error Code) (EH mode only)
70	EEV DISCONNECTION DETECTED
73	LIQUID SIDE THERMISTOR ABNORMALITY
74	GAS SIDE THERMISTOR ABNORMALITY
75	PRESSURE SENSOR ABNORMALITY
77	INDOOR UNIT - THERMOSTAT COMMUNICATION ERROR (STARTUP OPERATION & DURING OPERATION)
HU	HUMIDIFICATION DEMAND (Running without heating)
FC	FAN COOL - COMMUNICATING MODE ONLY (Fan Demand-Cool)
FH	FAN HEAT - COMMUNICATING MODE ONLY (Fan Demand-Heat)
F	FAN ONLY (Fan Demand-Manual)
H1	ELECTRIC HEAT LOW (Heat Demand, Back-up Heat Demand)
H2	ELECTRIC HEAT HIGH (Heat Demand, Back-up Heat Demand)
dF	DEFROST - COMMUNICATING MODE ONLY (note: defrost is displayed as H1 in a legacy setup)

SETTING THE MODE DISPLAY

MODE DISPLAY INTRODUCTION

A 2-digit display is provided on the printed circuit board (PCB) as a backup tool to the thermostat for accessing error codes and erasing error code history of the indoor unit. Follow the information provided in this section to learn how to use the mode display

DISPLAY

The display consists of 2 digits.

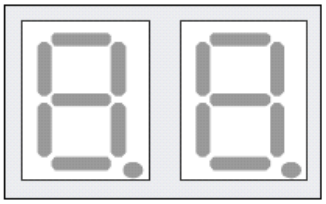

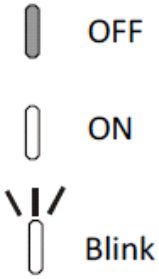

DISPLAY BUTTON LAYOUT

The display buttons shown can be used to navigate and select items:

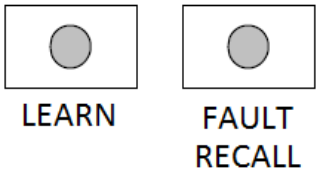

Example of button layout is shown above

FAULT CODE HISTORY NAVIGATION

This mode will allow the user to see the six most recent system faults. Please follow the flow chart to navigate to error codes from screen zero.

For a list of the fault codes, please see the TROUBLESHOOTING tables in this document.

It is also possible to erase all the diagnostics codes from this menu.

SETTING THE MODE DISPLAY

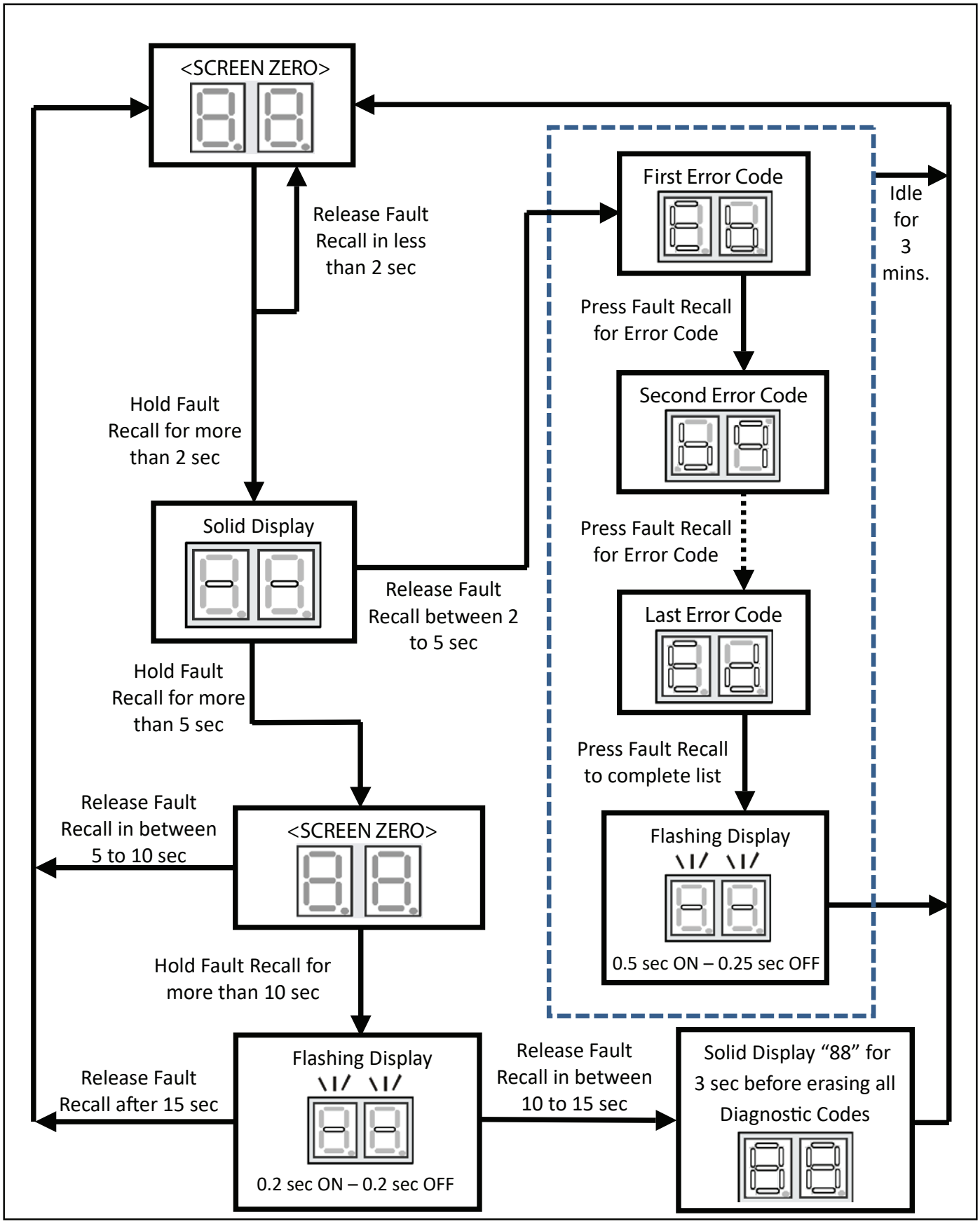

WIRING DIAGRAM

NOTE: THESE INSTRUCTIONS ARE SPECIFICALLY FOR DV**PEC MODELS. DO **NOT** ATTEMPT TO APPLY THESE DIAGRAMS FOR ANY OTHER MODELS.

WARNING

HIGH VOLTAGE! DISCONNECT ALL POWER BEFORE SERVICING. MULTIPLE POWER SOURCES MAY BE PRESENT. FAILURE TO DO SO MAY CAUSE PROPERTY DAMAGE, PERSONAL INJURY OR DEATH.

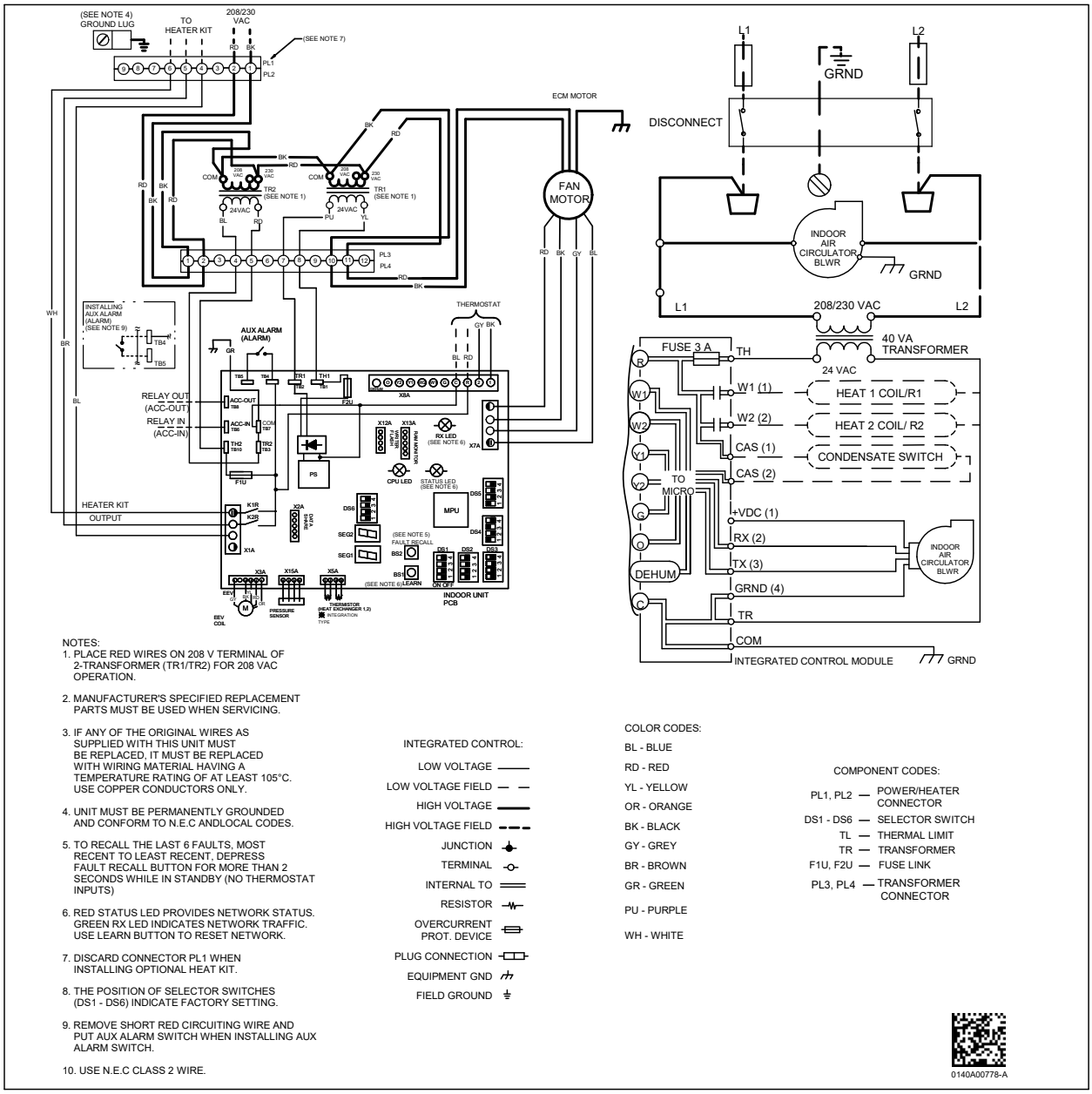

NOTES:

1. PLACE RED WIRES ON 208 V TERMINAL OF 2-TRANSFORMER (TR1/TR2) FOR 208 VAC OPERATION.
2. MANUFACTURER'S SPECIFIED REPLACEMENT PARTS MUST BE USED WHEN SERVICING.
3. IF ANY OF THE ORIGINAL WIRES AS SUPPLIED WITH THIS UNIT MUST BE REPLACED, IT MUST BE REPLACED WITH WIRING MATERIAL HAVING A TEMPERATURE RATING OF AT LEAST 105°C. USE COPPER CONDUCTORS ONLY.
4. UNIT MUST BE PERMANENTLY GROUNDED AND CONFORM TO N.E.C ANDLOCAL CODES.
5. TO RECALL THE LAST 6 FAULTS, MOST RECENT TO LEAST RECENT, DEPRESS FAULT RECALL BUTTON FOR MORE THAN 2 SECONDS WHILE IN STANDBY (NO THERMOSTAT INPUTS)
6. RED STATUS LED PROVIDES NETWORK STATUS. GREEN RX LED INDICATES NETWORK TRAFFIC. USE LEARN BUTTON TO RESET NETWORK.
7. DISCARD CONNECTOR PL1 WHEN INSTALLING OPTIONAL HEAT KIT.
8. THE POSITION OF SELECTOR SWITCHES (DS1 - DS6) INDICATE FACTORY SETTING.
9. REMOVE SHORT RED CIRCUITING WIRE AND PUT AUX ALARM SWITCH WHEN INSTALLING AUX ALARM SWITCH.
10. USE N.E.C CLASS 2 WIRE.

INTEGRATED CONTROL:

- LOW VOLTAGE
- LOW VOLTAGE FIELD
- HIGH VOLTAGE
- HIGH VOLTAGE FIELD
- JUNCTION
- TERMINAL
- INTERNAL TO
- RESISTOR
- OVERCURRENT PROT. DEVICE
- PLUG CONNECTION
- EQUIPMENT GND
- FIELD GROUND

COLOR CODES:

- BL - BLUE
- RD - RED
- YL - YELLOW
- OR - ORANGE
- BK - BLACK
- GY - GREY
- BR - BROWN
- GR - GREEN
- PU - PURPLE
- WH - WHITE

COMPONENT CODES:

- PL1, PL2 — POWER/HEATER CONNECTOR
- DS1 - DS6 — SELECTOR SWITCH
- TL — THERMAL LIMIT
- TR — TRANSFORMER
- F1U, F2U — FUSE LINK
- PL3, PL4 — TRANSFORMER CONNECTOR

Wiring is subject to change. Always refer to the wiring diagram on the unit for the most up-to-date wiring.

AIR HANDLER

AIR HANDLER HOMEOWNER'S ROUTINE MAINTENANCE RECOMMENDATIONS

*We strongly recommend a bi-annual maintenance checkup be performed before the heating and cooling seasons begin by a **qualified servicer**.*

REPLACE OR CLEAN FILTER

IMPORTANT NOTE: Never operate unit without a filter installed as dust and lint will build up on internal parts resulting in loss of efficiency, equipment damage and possible fire.

An indoor air filter must be used with your comfort system. A properly maintained filter will keep the indoor coil of your comfort system clean. A dirty coil could cause poor operation and/or severe equipment damage.

Your air filter or filters could be located in your furnace, in a blower unit, or in "filter grilles" in your ceiling or walls. The installer of your air conditioner or heat pump can tell you where your filter(s) are, and how to clean or replace them.

Check your filter(s) at least once a month. When they are dirty, replace or clean as required. Disposable type filters should be replaced. Reusable type filters may be cleaned.

You may want to ask your dealer about high efficiency filters. High efficiency filters are available in both electronic and non-electronic types. These filters can do a better job of catching small airborne particles.

MOTORS

Indoor and outdoor fan motors are permanently lubricated and do not require additional oiling.

WARNING

HIGH VOLTAGE!
DISCONNECT ALL POWER BEFORE SERVICING OR INSTALLING THIS UNIT. MULTIPLE POWER SOURCES MAY BE PRESENT. FAILURE TO DO SO MAY CAUSE PROPERTY DAMAGE, PERSONAL INJURY OR DEATH.

ALUMINUM INDOOR COIL CLEANING (QUALIFIED SERVICER ONLY)

This unit is equipped with an aluminum tube evaporator coil. The safest way to clean the evaporator coil is to simply flush the coil with water. This cleaning practice remains as the recommended cleaning method for both copper tube and aluminum tube residential evaporator coils.

It has been determined that many coil cleaners and drain pan tablets contain corrosive chemicals that can be harmful to aluminum tube and fin evaporator coils. Even a one-time application of these corrosive chemicals can cause premature aluminum evaporator coil failure. Any cleaners that contain corrosive chemicals including, but not limited to, chlorine and hydroxides, should not be used.

An alternate cleaning method is to use one of the products listed in TP-109* to clean the coils. The cleaners listed are the only agents deemed safe and approved for use to clean round tube aluminum coils. TP-109 is also available on the web site in Partner Link > Service Toolkit.

NOTE: Ensure coils are rinsed well after use of any chemical cleaners.

BEFORE YOU CALL YOUR SERVICER

- Check the thermostat to confirm that it is properly set.
- Wait 15 minutes. Some devices in the outdoor unit or in programmable thermostats will prevent compressor operation for awhile, and then reset automatically. Also, some power companies will install devices which shut off air conditioners for several minutes on hot days. If you wait several minutes, the unit may begin operation on its own.

CAUTION

TO AVOID THE RISK OF EQUIPMENT DAMAGE OR FIRE, INSTALL THE SAME AMPERAGE BREAKER OR FUSE AS YOU ARE REPLACING. IF THE CIRCUIT BREAKER OR FUSE SHOULD OPEN AGAIN WITHIN THIRTY DAYS, CONTACT A QUALIFIED SERVICER TO CORRECT THE PROBLEM.
IF YOU REPEATEDLY RESET THE BREAKER OR REPLACE THE FUSE WITHOUT HAVING THE PROBLEM CORRECTED, YOU RUN THE RISK OF SEVERE EQUIPMENT DAMAGE.

- Check the electrical panel for tripped circuit breakers or failed fuses. Reset the circuit breakers or replace fuses as necessary.
- Check the disconnect switch near the indoor furnace or blower to confirm that it is closed.
- Check for obstructions on the outdoor unit . Confirm that it has not been covered on the sides or the top. Remove any obstruction that can be safely removed. If the unit is covered with dirt or debris, call a qualified servicer to clean it.
- Check for blockage of the indoor air inlets and outlets. Confirm that they are open and have not been blocked by objects (rugs, curtains or furniture).
- Check the filter. If it is dirty, clean or replace it.
- Listen for any unusual noise(s), other than normal operating noise, that might be coming from the outdoor unit. If you hear unusual noise(s) coming from the unit, call a qualified servicer.

Start-Up Checklist

Air Handler / Coil				
	Model Number	_____		
	Serial Number	_____		
ELECTRICAL				
Line Voltage (Measure L1 and L2 Voltage)	L1 - L2	_____		
Secondary Voltage (Measure Transformer Output Voltage)	R - C	_____		
Blower Amps		_____		
Heat Strip 1 - Amps		_____		
Heat Strip 2 - Amps		_____		
BLOWER EXTERNAL STATIC PRESSURE				
Return Air Static Pressure		_____	IN. W.C.	
Supply Air Static Pressure		_____	IN. W.C.	
Total External Static Pressure (Ignoring +/- from the reading above, add total here)		_____	IN. W.C.	
TEMPERATURES				
Return Air Temperature (Dry bulb / Wet bulb)		_____	DB °F	_____ WB °F
Cooling Supply Air Temperature (Dry bulb / Wet bulb)		_____	DB °F	_____ WB °F
Heating Supply Air Temperature		_____	DB °F	
Temperature Rise		_____	DB °F	
Delta T (Difference between Supply and Return Temperatures)		_____	DB °F	

Air Handler / Coil - (Inverter Matched)	
INVERTER AH / COIL ONLY	
Check EEV and EEV wiring is secure (no adjustment required)	_____

Additional Checks	
Check wire routings for any rubbing	_____
Check product for proper draining	_____
Check screw tightness on blower wheel	_____
Check factory wiring and wire connections	_____
Check product for proper clearances as noted by installtion instructions	_____

°F to °C formula: (°F - 32) divided by 1.8 = °C **°C to °F formula: (°C multiplied by 1.8) + 32 = °F**

CUSTOMER FEEDBACK
Daikin Comfort Technologies is very interested in all product comments.
Please fill out the feedback form on the following link:
https://daikincomfort.com/contact-us
You can also scan the QR code on the right to be directed to the feedback page.

PRODUCT REGISTRATION
Thank you for your recent purchase. Though not required to get the protection of the standard warranty, registering your product is a relatively short process, and entitles you to additional warranty protection, except that failure by California and Quebec residents to register their product does not diminish their warranty rights. The duration of warranty coverages in Texas differs in some cases.

For Product Registration, please register by following this link:
https://daikincomfort.com/owner-support/product-registration
You can also scan the QR code on the right to be directed to the Product Registration page.

Our continuing commitment to quality products may mean a change in specifications without notice.
© 2015-2019, 2021-2023 **DAIKIN COMFORT TECHNOLOGIES MANUFACTURING, L.P.**
19001 Kermier Rd., Waller, TX 77484
www.daikincomfort.com