Packaged Heat Pumps 5-Ton Units
DP5HM 15.2 SEER2 "M" Series with R-32
Installation Instructions

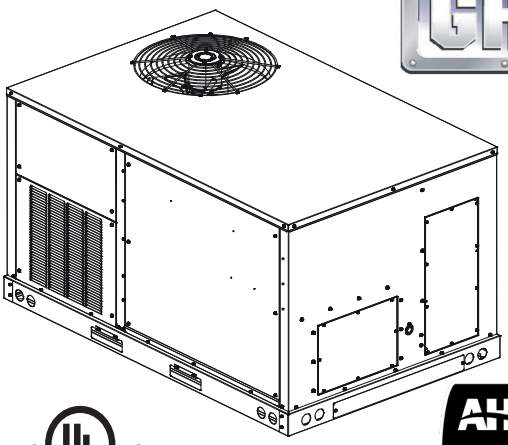

COMMERCIAL GRADE

c UL us LISTED

AHRI CERTIFIED® www.ahridirectory.org
Unitary Small HP
AHRI Standard 210/240
Certification applies only when the complete system is listed with AHRI.

QUEBEC DISCLOSURE REGARDING AVAILABILITY OF REPLACEMENT PARTS, REPAIR SERVICES AND INFORMATION FOR MAINTENANCE AND REPAIR: Daikin Comfort Technologies Manufacturing, Inc. (Daikin) does not guarantee the availability of (1) replacement parts; (2) repair services; and (3) information necessary to maintain or repair products, within the meaning of section 39.1 of the Consumer Protection Act, CQLR, c P-40.1 and section 79.18 of the Regulation respecting the application of the Consumer Protection Act, CQLR, c P-40.1, r. 3.

AVIS POUR LE QUÉBEC CONCERNANT LA DISPONIBILITÉ DES PIÈCES DE RECHANGE, DES SERVICES DE RÉPARATION ET DES RENSEIGNEMENTS POUR L'ENTRETIEN ET LA RÉPARATION : Daikin Comfort Technologies Manufacturing, Inc. (Daikin) ne garantit pas la disponibilité (1) des pièces de rechange, (2) des services de réparation et (3) des renseignements pour l'entretien et la réparation, au sens de l'article 39.1 de la Loi sur la protection du consommateur, RLRQ c P-40.1 et de l'article 79.18 du Règlement d'application de la Loi sur la protection du consommateur, RLRQ c P-40.1, r 3.

⚠ WARNING

Only personnel that have been trained to install, adjust, service, maintenance or repair (hereinafter, "service") the equipment specified in this manual should service the equipment.

This equipment is not intended for use by persons (including children) with reduced physical, sensory or mental capacities, or lack of experience and knowledge, unless they have been given supervision or instruction concerning use of the appliance by a person responsible for their safety.

Children should be supervised to ensure that they do not play with the equipment.

The manufacturer will not be responsible for any injury or property damage arising from improper supervision, service or service procedures. If you service this unit, you assume responsibility for any injury or property damage which may result. In addition, in jurisdictions that require one or more licenses to service the equipment specified in this manual, only licensed personnel should service the equipment. Improper supervision, installation, adjustment, servicing, maintenance or repair of the equipment specified in this manual, or attempting to install, adjust, service or repair the equipment specified in this manual without proper supervision or training may result in product damage, property damage, personal injury or death.

⚠ WARNING

Do not bypass safety devices.

NOTE: This equipment is only approved for use with R-32 refrigerant.

⚠ RECOGNIZE THIS SYMBOL AS A SAFETY PRECAUTION.

Our continuing commitment to quality products may mean a change in specifications without notice.

© 2024-2025 Daikin Comfort Technologies Manufacturing, Inc.
19001 Kermier Rd. Waller, TX 77484
www.daikincomfort.com

IOD-3037C
11/2025

TABLE OF CONTENTS

To the Installer 2
Shipping Inspection 2
Replacement Parts 2
Important Safety Instructions 2
General Information 4
Unit Location 6
Clearances 8
Roof Curb Post- Installation Checks 8
Roof Top Duct Connections 8
Rigging Details 9
Electrical Wiring 10
Circulation Air and Filters 12
Condensate Drain Piping 12
Start-up, Adjustments and Checks 13
Total External Static Pressure 14
Air Flow Adjustments 14
Superheat and Subcooling 15
Start-up Procedures and Checklist 16
Heat Pump Operation 17
Troubleshooting 18
Reversing Valve Troubleshooting 18
Maintenance 19
Troubleshooting Code 22
Appendix A Blower Performance Tables - Heat Pump 24
Appendix B Unit Dimensions 25
Appendix C air flow for electric heat 26
Wiring Diagram 27
Start-Up Checklist 28

TO THE INSTALLER

Carefully read all instructions for the installation prior to installing unit. Make sure each step or procedure is understood and any special considerations are taken into account before starting installation. Assemble all tools, hardware and supplies needed to complete the installation. Some items may need to be purchased locally. After deciding where to install unit, closely look the location over – both the inside and outside of the home. Note any potential obstacles or problems that might be encountered as noted in this manual. Choose a more suitable location if necessary.

IMPORTANT NOTE: If a crankcase heater is used, the unit should be energized 24 hours prior to compressor start up to ensure crankcase heater has sufficiently warmed the compressor. Compressor damage may occur if this step is not followed.

Before using this manual, check the serial plate for proper model identification.

The installation and servicing of this equipment must be performed by qualified, experienced technicians only.

SHIPPING INSPECTION

Transportation Damage

Upon receiving the unit, inspect it for damage from shipment. Claims for damage, either shipping or concealed, should be filed immediately with the shipping company. Check the unit model number, specifications, electrical characteristics, and accessories to determine if they are correct. In the event an incorrect unit is shipped, it must be returned to the supplier and must NOT be installed. The manufacturer assumes no responsibility for installation of incorrectly shipped units.

Message to the Homeowner

These instructions are addressed primarily to the installer; however, useful maintenance information is included and should be kept, after installation, for future reference.

REPLACEMENT PARTS

Ordering Parts

When reporting shortages or damages, or ordering repair parts, give the complete unit model and serial numbers as stamped on the unit's nameplate. Replacement parts for this appliance are available through your contractor or local distributor. For the location of your nearest distributor, consult the white business pages, the yellow page section of the local telephone book or contact:

HOMEOWNER'S SUPPORT
DAIKIN COMFORT TECHNOLOGIES
MANUFACTURING, INC.
19001 KERMIER ROAD
WALLER, TEXAS 77484
(855) 770-5678

IMPORTANT SAFETY INSTRUCTIONS

Recognize Safety Symbols, Words, and Labels

The following symbols and labels are used throughout this manual to indicate immediate or potential hazards. It is the owner's responsibility to read and comply with all safety information and instructions accompanying these symbols. Failure to heed safety information increases the risk of serious personal injury or death, property damage and/or product damage.

CAUTION

Sheet metal parts, screws, clips and similar items inherently have sharp edges, and it is necessary that the installer and service personnel exercise caution.

WARNING

To avoid property damage, personal injury or death, do not use this unit if any part has been under water. Immediately call a qualified service technician to inspect the furnace and to replace any part of the control system and any gas control having been under water.

WARNING

Do not connect to or use any device that is not certified by Daikin for use with this unit. Serious property damage, personal injury, reduced unit performance and/or hazardous conditions may result from the use of such non-approved devices.

WARNING

This unit must not be used as a "construction heater" during the finishing phases of construction on a new structure. This type of use may result in premature failure of the unit due to extremely low return air temperature and exposure to corrosive or very dirty atmospheres.

WARNING

Connecting unit ductwork to unauthorized heat producing devices such as a fireplace insert, stove, etc. May result in property damage, fire, carbon monoxide poisoning, explosion, personal injury or death.

WARNING

HIGH VOLTAGE!
Disconnect all power before servicing or installing this unit. Multiple power sources may be present. Failure to do so may cause property damage, personal injury or death.

WARNING

To prevent the risk of property damage, personal injury, or death, do not store combustible materials or use gasoline or other flammable liquids or vapors in the vicinity of this appliance.

WARNING

LEAK DETECTION SYSTEM installed. Unit must be powered except for service.

WARNING

This unit is equipped with electrically powered safety measures. To be effective, the unit must be electrically powered at all times after installation, other than when servicing.

WARNING

Do not use means to accelerate the defrosting process or to clean, other than those recommended by the manufacturer. The appliance shall be stored in a room without continuously operating ignition sources (for example: open flames, an operating gas appliance or an operating electric heater.) Do not pierce or burn. Be aware that refrigerants may not contain an odor.

WARNING

Auxiliary devices which may be a POTENTIAL IGNITION SOURCE shall not be installed in the duct work. Examples of such POTENTIAL IGNITION SOURCES are hot surfaces with a temperature exceeding 700°C and electric switching devices.

WARNING

Only auxiliary devices approved by the appliance manufacturer or declared suitable with the refrigerant shall be installed in connecting ductwork.

WARNING

Prior to servicing the unit or removing the compressor terminal plug or terminal cover, disconnect all electrical power from the unit. Multiple power sources may be present.

WARNING

Do not operate the compressor(s) without the terminal plug fully engaged or the terminal cover properly installed.

WARNING

A tripped circuit breaker or blown fuse may indicate that an electrical problem exists. Do not reset a circuit breaker or replace fuses without first performing thorough electrical troubleshooting and testing procedures.

The Following Instructions are Mandatory for A2L Systems and Supersede Other Instructions

WARNING

Only brazing techniques or approved mechanical joints should be used to connect refrigerant tubing connections. Non-approved mechanical connectors and other methods are not permitted in this system containing A2L refrigerant. Approved mechanical joints will be detailed in the product's specification sheets.

Deep Vacuum Method

The Deep Vacuum Method requires a vacuum pump rated for 500 microns or less. This method effectively and efficiently ensures the system is free of non-condensable air and moisture. The Triple Evacuation Method is detailed in the Service Manual for this product model as an alternative. To expedite the evacuation procedure, it is recommended that the Schrader Cores be removed from the service valves using a core-removal tool.

1. Connect the vacuum pump, micron gauge, and vacuum-rated hoses to both service valves. Evacuation must use both service valves to eliminate system mechanical seals.
2. Evacuate the system to less than 500 microns.
3. Isolate the pump from the system and hold the vacuum for 10 minutes (minimum). Typically, pressure will rise slowly during this period. If the pressure rises to less than 1000 microns and remains steady, the system is considered leak-free; proceed to system charging and startup.
4. If pressure rises above 1000 microns but holds steady below 2000 microns, non-condensable air or moisture may remain, or a small leak may be present. Return to step 2: If the same result is achieved, check for leaks and repair. Repeat the evacuation procedure.
5. If pressure rises above 2000 microns, a leak is present. Check for leaks and repair any leaks. Then, repeat the evacuation procedure.

Accessory Installation

WARNING

All accessories that may become a potential ignition source if installed, such as electronic air cleaners, must only be powered through our accessory control board kit. If an electronic air cleaner is already installed in the duct work and not connected to the accessory control board, it will have to be disabled or removed. Ensure that any additional wiring from the indoor unit to the accessory control board is routed and protected from damage and wear, avoiding the flue pipe and any joints that may need brazed or disconnected for service. Refer to the product specification sheet for the accessory control board kit part number.

Altitude Adjustment Factor to Calculate Minimum Room Area

The Indoor equipment mitigation requirements are calculated at sea level. For higher altitudes adjust the minimum room area specified on or near the Serial Plate by the corresponding altitude adjustment factor shown below. This table is provided as a reference.

Adjusted room area (Amin adj) is the product of the minimum room area specified on the serial plate and the adjustment factor AF, as shown in below formula.

Amin adj = Amin (serial plate) * AF

Height in meters	Height in feet	Altitude Adjustment Factor (AF)
At sea level	At sea level	1.00
1~200	1~660	1.02
200~400	660~1320	1.03
400~600	1320~1970	1.05
600~800	1970~2630	1.07
800~1000	2630~3290	1.09
1000~1200	3290~3940	1.11
1200~1400	3940~4600	1.13
1400~1600	4600~5250	1.15
1600~1800	5250~5910	1.17
1800~2000	5910~6570	1.19
2000~2200	6570~7220	1.21
2200~2400	7220~7880	1.24
2400~2600	7880~8540	1.26
2600~2800	8540~9190	1.29
2800~3000	9190~9850	1.31
3000~3200	9850~10500	1.34

GENERAL INFORMATION

The DP5HM SEER2 5-TON M-Series heat pump is designed for OUTDOOR USE ONLY. Rated performance is achieved after 20 hours of operation. See product specification sheet for packaged models. Optional field-installed heat kits are available in 5, 10, 15 and 20kW.

The DP5HM SEER2 M-Series are self-contained packaged units so the only connections needed for installation are the supply and return ducts, the line and low voltage wiring and drain connection. Rated performance is delivered at the specified airflow. See product specification for packaged models.

Specification sheets can be found at: www.daikincomfort.com for Daikin brand products. Within the website, please select the Products and Services menu and then select the submenu for the type of product to be installed, such as heat pumps, to access a list of product pages that each contain links to the model's specification sheet. The units are AHRI certified. The information on the rating plate is in compliance with the FTC & DOE rating for single phase units.

Qualification of Workers

Personnel must be certified to service, work, and/or repair units with FLAMMABLE REFRIGERANTS. A certificate should document the competence and qualification achieved through training that included the substance of the following:

- Information about the explosion potential of FLAMMABLE REFRIGERANTS to show that flammables may be dangerous when handled without care.
- Information about POTENTIAL IGNITION SOURCES, especially those that are not obvious, such as lighters, light switches, vacuum cleaners, electric heaters.

- Information about the different safety concepts, including ventilated and unventilated areas.
- Information about refrigerant detectors, including function, operation, and service measures.
- Information about the concept of sealed components and sealed enclosures according to IEC 60079-15:2010.
- Information about the correct working procedures, including commissioning, maintenance, repair, decommissioning, and disposal procedures.

EPA Regulations

Important: The United States Environmental Protection Agency (EPA) has issued various regulations regarding the introduction and disposal of refrigerants in this unit. Failure to follow these regulations may harm the environment and can lead to the imposition of substantial fines. Because regulations may vary due to passage of new laws, we suggest a certified technician perform any work done on this unit. Should you have any questions please contact the local office of the EPA.

National Codes

This product is designed and manufactured to permit installation in accordance with National Codes. It is the installer's responsibility to install the product in accordance with National Codes and/or prevailing local codes and regulations.

The heating and cooling capacities of the unit should be greater than or equal to the design heating and cooling loads of the area to be conditioned. The loads should be calculated by an approved method or in accordance with ASHRAE Guide or Manual J - Load Calculations published by the Air Conditioning Contractors of America.

Obtain from:
American National Standards Institute
25 West 43rd Street, 4th Floor
New York, NY 10036
www.ansi.org

System design and installation should also, where applicable, follow information presented in accepted industry guides such as the ASHRAE Handbooks. The manufacturer assumes no responsibility for equipment installed in violation of any code or regulation. The mechanical installation of the packaged roof top units consists of making final connections between the unit and building services; supply and return duct connections; and drain connections (if required). The internal systems of the unit are completely factory-installed and tested prior to shipment.

Units are generally installed on a steel roof mounting curb assembly which has been shipped to the job site for installation on the roof structure prior to the arrival of the unit. The model number shown on the unit's identification plate identifies the various components of the unit such as refrigeration tonnage, heating output and voltage.

Carefully inspect the unit for damage including damage to the cabinetry. Any bolts or screws which may have loosened in transit must be re-tightened.
In the event of damage, the receiver should:

1. Make notation on delivery receipt of any visible damage to shipment or container.
2. Notify the carrier promptly and request an inspection.
3. In case of concealed damage, the carrier should be notified as soon as possible-preferably within 5 days.
4. File the claim with the following supporting documents:
   a. Original Bill of Lading, certified copy, or indemnity bond.
   b. Original paid freight bill or indemnity in lieu thereof.
   c. Original invoice or certified copy thereof, showing trade and other discounts or reductions.
   d. Copy of the inspection report issued by the carrier representative at the time damage is reported to the carrier. The carrier is responsible for making prompt inspection of damage and for a thorough investigation of each claim. The distributor or manufacturer will not accept claims from dealers for transportation damage.

NOTE: When inspecting the unit for transportation damage, remove all packaging materials. Recycle or dispose of the packaging material according to local codes.

Major Components

The unit includes a hermetically sealed refrigerating system (consisting of a compressor, condenser coil, evaporator coil with flowrator), an indoor blower, a condenser fan, and all necessary internal electrical wiring. The heat pump also includes a reversing valve, solenoid, defrost thermostat and control and loss of charge protection. The system is factory-evacuated, charged and performance tested. Refrigerant amount and type are indicated on rating plate.

Pre-Installation Checkpoints

Carefully read all instructions for the installation prior to installing unit. Ensure each step or procedure is understood and any special considerations are taken into account before starting installation. Assemble all tools, hardware and supplies needed to complete the installation. Some items may need to be purchased locally.

Check that cabling /wiring will not be subject to wear, corrosion, excessive pressure, vibration, sharp edges or any other adverse environmental effects. The check shall also take into account the effects of aging or continual vibration from sources such as compressors or fans.

Under no circumstances shall potential sources of ignition be used in the searching for or detection of refrigerant leaks. A halide torch (or any other detector using a naked flame) shall not be used.

The following leak detection methods are deemed acceptable for all refrigerant systems.

Electronic leak detectors may be used to detect refrigerant leaks but, in the case of FLAMMABLE REFRIGERANTS, the sensitivity may not be adequate, or may need recalibration. (Detection equipment shall be calibrated in a refrigerant-free area.) Ensure that the detector is not a potential source of ignition and is suitable for the refrigerant used. Leak detection equipment shall be set at a percentage of the LFL of the refrigerant and shall be calibrated to the refrigerant employed, and the appropriate percentage of gas (25% maximum) is confirmed.

Leak detection fluids are also suitable for use with most refrigerants but the use of detergents containing chlorine shall be avoided as the chlorine may react with the refrigerant and corrode the copper pipe-work.

If a leak is suspected, all naked flames shall be removed/ extinguished.

If a leakage of refrigerant is found which requires brazing, all of the refrigerant shall be recovered from the system.

Before attempting any installation, the following points should be considered:

- Structural strength of supporting members
- Clearances and provision for servicing
- Power supply and wiring
- Air duct connections
- Drain facilities and connections
- Location may be on any four sides of a home, manufactured or modular, to minimize noise

UNIT LOCATION

WARNING

To prevent possible equipment damage, property damage, personal injury or death, the following bullet points must be observed when installing the unit.

NOTE: Units are designed for outdoor installation only at a max altitude of 8,000 feet above sea level.

IMPORTANT NOTE: Remove wood shipping rails prior to installation of the unit.

WARNING

The appliance shall be installed, operated and stored in room with a floor area not less than the minimum room area.

$\geq 15.3\ m^2$
$164.5\ ft^2$

Minimum Room Area

IMPORTANT NOTE: Refer to the Altitude Adjusted Room Area Calculation referenced later in this manual.

NOTE: Appliance is shipped from factory for vertical duct application.

Proper installation of the unit ensures trouble-free operation. Improper installation can result in problems ranging from noisy operation to property or equipment damages, dangerous conditions that could result in injury or personal property damage and that are not covered by the warranty. Give this booklet to the user and explain it's provisions. The user should retain these instructions for future reference.

- To avoid possible illness or death of the building occupants, do NOT locate outside air intake device (economizer, manual fresh air intake, motorized fresh air intake) too close to an exhaust outlet, gas vent termination, or plumbing vent outlet. For specific distances required, consult local codes.
- Allow minimum clearances from the enclosure for fire protection, proper operation, and service access (see unit clearances). These clearances must be permanently maintained.
- When the unit is heating, the temperature of the return air entering the unit must be a minimum of 55°F.

Ground Level Installations Only:

- When the unit is installed on the ground adjacent to the building, a level concrete (or equal) base is recommended. Prepare a base that is 3" larger than the package unit footprint and a minimum of 3" thick.
- The base should also be located where no runoff of water from higher ground can collect in the unit.
- Consider the effect of outdoor fan noise on conditioned space and any adjacent occupied space. It is recommended that the unit be placed so that condenser air discharge does not blow toward windows less than 25 feet away.

- The unit should be set on a solid, level foundation – preferably a concrete slab at least 4 inches thick. The slab should be above ground level and surrounded by a graveled area for good drainage. Any slab used as a unit's foundation should not adjoin the building as it is possible that sound and vibration may be transmitted to the structure.

Heat Pumps require special location consideration in areas of heavy snow accumulation and/or areas with prolonged continuous subfreezing temperatures. Heat pump unit bases have holes under the outdoor coil to permit drainage of defrost water accumulation. The unit must be situated to permit free unobstructed drainage of the defrost water and ice. A minimum of 2" clearance under the outdoor coil is required in milder climates. See FIGURE 1: HEAT PUMP ELEVATION CHART.

Heat Pump Elevation Chart	
Design Temperature	**Suggested Minimum Elevation**
+15° and above	2 ½"
-5° to +14°	8"
Below -5°	12"

Figure 1: Heat Pump Elevation Chart

Roof top Installations Only:

- To avoid possible property damage or personal injury, the roof must have sufficient structural strength to carry the weight of the unit(s) and snow or water loads as required by local codes. Consult a structural engineer to determine the weight capabilities of the roof.
- The unit may be installed directly on wood floors or on Class A, Class B, or Class C roof covering material.
- To avoid possible personal injury, a safe, flat surface for service personnel should be provided.
- Adequate clearances from the unit to any adjacent public walkways, adjacent buildings, building openings or openable windows must be maintained in accordance with National Codes.

Unit Precautions

- Do not stand or walk on the unit.
- Do not drill holes anywhere in panels or in the base frame of the unit except where indicated. Unit access panels provide structural support.
- Do not remove any access panels until unit has been installed on roof curb or field supplied structure.
- Do not roll unit across finished roof without prior approval of owner or architect.
- Do not skid or slide on any surface as this may damage unit base. The unit must be stored on a flat, level surface. Protect the condenser coil because it is easily damaged.

CAUTION

All curbs look similar, to avoid incorrect curb positioning, check job plans carefully and verify markings on curb assembly. Instructions may vary in curb styles and supersedes information shown.

Roof Curb Installations Only:

Curb installations must comply with local codes and should be done in accordance with the established guidelines of the National Roofing Contractors Association.

Proper unit installation requires that the roof curb be firmly and permanently attached to the roof structure. Check for adequate fastening method prior to setting the unit on the curb.

Full perimeter roof curbs are available from the factory and are shipped unassembled. Field assembly, squaring, leveling and mounting on the roof structure are the responsibility of the installing contractor. All required hardware necessary for the assembly of the sheet metal curb is included in the curb accessory.

WARNING

To prevent possible equipment damage, property damage, personal injury or death, the following bullet points must be observed when installing the unit.

- Sufficient structural support must be determined prior to locating and mounting the curb and package unit.
- Ductwork must be constructed using industry guidelines. The duct work must be placed into the roof curb before mounting the package unit. Our full perimeter curbs include duct connection frames to be assembled with the curb. Cantilevered type curbs are not available from the factory.
- Curb insulation, cant strips, flashing and general roofing material are furnished by the contractor.
- The curbs must be supported on parallel sides by roof members.
- The roof members must not penetrate supply and return duct opening areas as damage to the unit might occur.

NOTE: The unit and curb accessories are designed to allow vertical duct installation <u>before</u> unit placement. Duct installation <u>after</u> unit placement is not recommended.

See the manual shipped with the roof curb for assembly and installation instructions.

CLEARANCES

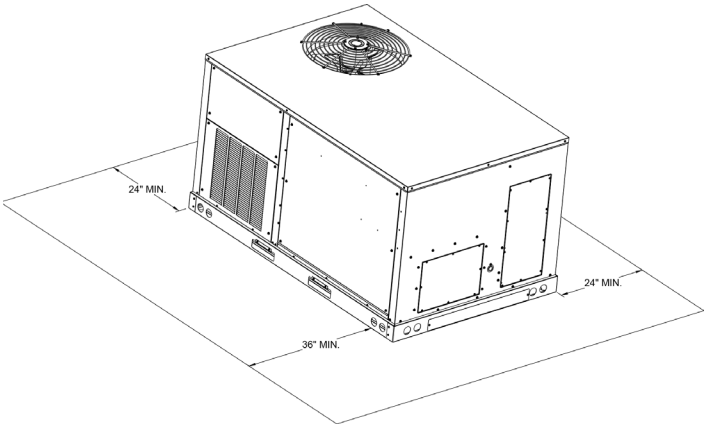

Unit Clearances

**In situations that have multiple units, a 36" minimum clearance is required between the condenser coils.*

Adequate clearance around the unit should be kept for safety, service, maintenance, and proper unit operation. A clearance of 48" is recommended on all sides of the unit to facilitate possible parts replacement, to allow service access and to insure proper ventilation and condenser airflow. The top of the unit should be completely unobstructed. If units are to be located under an overhang, there should be a minimum of 48" clearance and provisions made to deflect the warm discharge air out from the overhang. The unit should be installed remote from all building exhausts to inhibit ingestion of exhaust air into the unit fresh air intake.

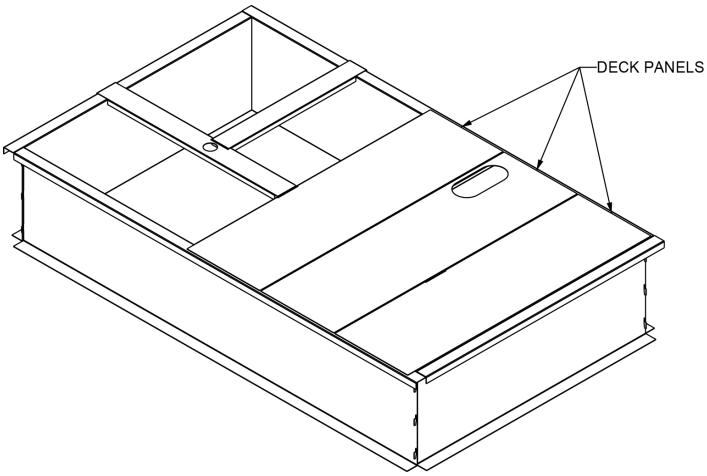

Roof Curb Installation

ROOF CURB POST-INSTALLATION CHECKS

After installation, check the top of the curb, duct connection frame and duct flanges to make sure gasket has been applied properly. Gasket should be firmly applied to the top of the curb perimeter, duct flanges and any exposed duct connection frame. If gasket is loose, re-apply using strong weather resistant adhesive.

Protrusion

Inspect curb to ensure that none of the utility services (electric) routed through the curb protrude above the curb.

CAUTION

If protrusions exist, do not attempt to set unit on curb.

ROOF TOP DUCT CONNECTIONS

Roof Top Installation

1. Before locating the unit on the roof, make sure that the strength of the roof and beams is adequate to support the weight involved. (See specification sheet for weight of units). This is very important and the installer's responsibility.
2. Make a proper consideration for weather-tight integrity of the roof and proper drainage of condensate.
3. To ensure proper condensate drainage, unit must be installed in a level position.
4. Consideration should also be given to shade, appearance, and noise.

Install all duct connections on the unit before placing the unit on rooftop.

Horizontal Discharge

Refer to IOD-7019 included in the literature pack for installing horizontal duct covers.
Flexible duct connectors between the unit and ducts are recommended. Insulate and weatherproof all external ductwork and joints as required and in accordance with local codes.

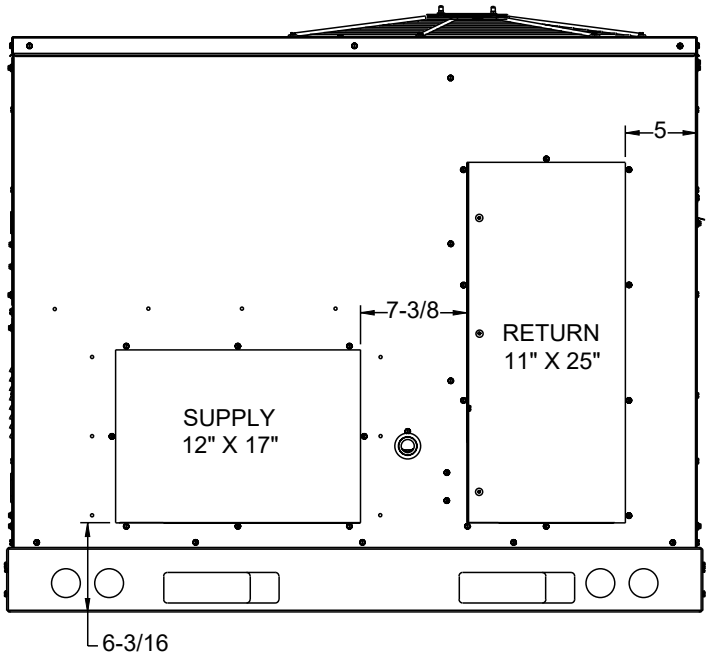

Horizontal Discharge Duct Connections

RIGGING DETAILS

WARNING

To prevent property damage, the unit should remain in an upright position during all rigging and moving operations. To facilitate lifting and moving when a crane is used, place the unit in an adequate cable sling.

CAUTION

If units are lifted two at a time, the fork holes on the condenser end of the unit must not be used. Minimum fork length is 42" to prevent damage to the unit; however, 48" is recommended.

WARNING

To prevent possible equipment damage, property damage, personal injury or death, the following bullet points must be observed when installing the unit.

NOTE: Provisions for forks have been included in the unit base frame. No other fork locations are approved.

- Unit must be lifted by the four lifting holes located at the base frame corners.
- Lifting cables should be attached to the unit with shackles.
- The distance between the crane hook and the top of the unit must not be less than 60".
- Two spreader bars must span over the unit to prevent damage to the cabinet by the lift cables. Spreader bars must be of sufficient length so that cables do not come in contact with the unit during transport. Remove wood struts mounted beneath unit base frame before setting unit on roof curb. These struts are intended to protect unit base frame from fork lift damage. Removal is accomplished by extracting the sheet metal retainers and pulling the struts through the base of the unit. Refer to rigging label on the unit.

IMPORTANT: If using bottom discharge with roof curb, ductwork should be attached to the curb prior to installing the unit. Ductwork dimensions are shown in Roof Curb Installation Instructions.

Refer to the Roof Curb Installation Instructions for proper curb installation. Curbing must be installed in compliance with the National Roofing Contractors Association Manual.

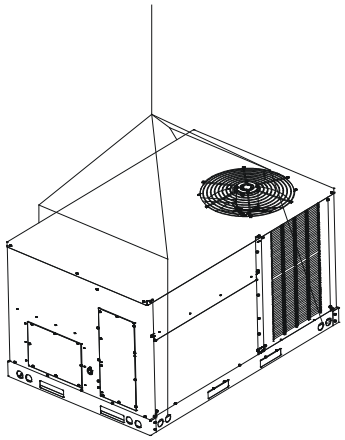

To assist in determining rigging requirements, unit weights and center of gravity are shown as follows:

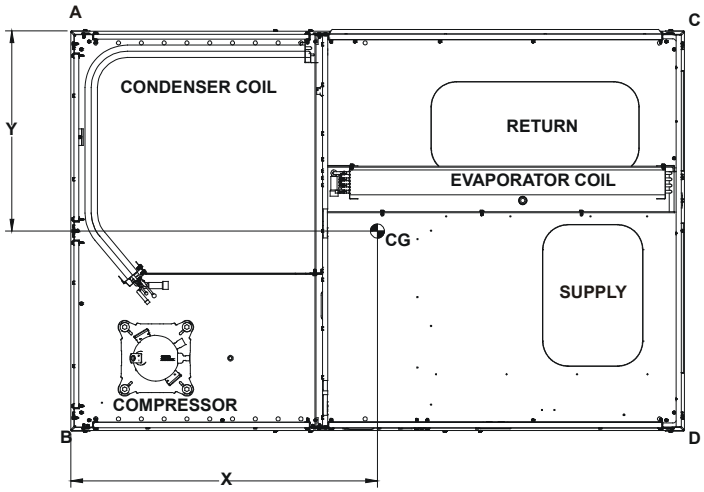

Corner and Center of Gravity Locations

NOTE: Unit should be lifted at a point above center of gravity.

Model	Shipping Weight (lb)	Operating Weight (lb)	Corner Weights (lb)				X (in)	Y (in)
			A	B	C	D		
DP5HM6031	688	630	150	194	165	121	33.5	27.6

CAUTION

To prevent damage to the wiring, protect wiring from sharp edges. Follow national electrical code and all local codes and ordinances. Do not route wires through removable access panels.

CAUTION

To prevent severe damage to the bottom of the unit, do not fork lift unit after wood struts have been removed.

Bring condenser end of unit into alignment with the curb first. Lower unit carefully onto roof mounting curb. When a rectangular cantilever curb is used, care should be taken to center the unit. Check for proper alignment and orientation of supply and return openings with duct.

Rigging Removal

CAUTION

To prevent damage to the unit, do not allow crane hooks and spreader bars to rest on the roof of the unit.

Remove spreader bars, lifting cables and other rigging equipment.

ELECTRICAL WIRING

WARNING

HIGH VOLTAGE!
Disconnect all power before servicing or installing this unit. Multiple power sources may be present. Failure to do so may cause property damage, personal injury or death.

WARNING

HIGH VOLTAGE!
To avoid personal injury or death due to electrical shock, do not tamper with factory wiring. The internal power and control wiring of these units are factory-installed and have been thoroughly tested prior to shipment. Contact your local representative if assistance is required.

CAUTION

To prevent damage to the wiring, protect wiring from sharp edges. Follow national electrical code and all local codes and ordinances. Do not route wires through removable access panels.

CAUTION

Conduit and fittings must be weather-tight to prevent water entry into the building.

WARNING

HIGH VOLTAGE!
Prior to servicing the unit or removing the compressor terminal plug or terminal cover, Disconnect all electrical power from the unit. Multiple power sources may be present.

WARNING

Do not operate the compressor(s) without the terminal plug fully engaged or the terminal cover properly installed. Get away if unusual sounds are heard from within the compressor. Disconnect electrical power from the unit.

WARNING

A tripped circuit breaker or blown fuse may indicate that an electrical problem exists. Do not reset a circuit breaker or replace fuses without first performing thorough electrical troubleshooting and testing procedures.

WARNING

Hermetic compressor electrical terminal venting can be dangerous. In certain circumstances, the terminal may be expelled, venting the refrigerant vapor and compressor oil contained within the compressor housing and system. Be alert for sounds of arcing (sizzling, sputtering, or popping) inside the compressor. Immediately get away if you hear these sounds and disconnect electrical power from the unit.

For unit protection, use a fuse or HACR circuit breaker that is in excess of the circuit ampacity, but less than or equal to the maximum overcurrent protection device. DO NOT EXCEED THE MAXIMUM OVERCURRENT DEVICE SIZE SHOWN ON UNIT DATA PLATE.

Rated Voltage	Minimum Supply Voltage	Maximum Supply Voltage
208/240V	197	253

All line voltage connections must be made through weatherproof fittings. All exterior power supply and ground wiring must be in approved weatherproof conduit.
The main power supply wiring to the unit and low voltage wiring to accessory controls must be done in accordance with these instructions, the latest edition of the National Electrical Code (ANSI/NFPA 70), and all local codes and ordinances.

The unit is factory wired for the voltage shown on the unit's data plate. Refer to model nomenclature in Appendix B for voltage requirement for your unit.

NOTE: If supply voltage is 208V, lead on primary of transformer(s) must be moved from the 240V to the 208V tap. Refer to wiring diagram on unit for details.

Main power wiring should be sized for the minimum circuit ampacity shown on the unit's database. Size wires in accordance with the ampacity tables in Article 310 of the National Electrical Code. If long wires are required, it may be necessary to increase the wire size to prevent excessive voltage drop. Wires should be sized for a maximum of 3% voltage drop.

Branch Circuit Ampacity	15	20	25	30	35	40	45	50
SUPPLY WIRE LENGTH - FEET								
200	6	4	4	4	3	3	2	2
150	8	6	6	4	4	4	3	3
100	10	8	8	6	6	6	4	4
50	14	12	10	10	8	8	6	6

Wiring Table

CAUTION

To avoid risk of property damage, personal injury or fire, use only copper conductors.

CAUTION

Label all wires prior to disconnection when servicing controls. Wiring errors can cause improper and dangerous operation. Verify proper operation after servicing.

NOTE: A weather-tight disconnect switch, properly sized for the unit total load, must be field or factory installed. An external field supplied disconnect may be mounted on the exterior panel.

Ensure the data plate is not covered by the field-supplied disconnect switch.

- Some disconnect switches are not fused. Protect the power leads at the point of distribution in accordance with the unit data plate.

NOTE: Refer to local codes for requirements.

- The unit must be electrically grounded in accordance with local codes or, in the absence of local codes, with the latest edition of the National Electrical Code ANSI/NFPA 70, and/or the Canadian Electrical Code, CSA C22.1, Part 1. A ground lug is provided for this purpose. Do not use the ground lug for connecting a neutral conductor.
- Connect power wiring to the electrical power block located within the main control box.

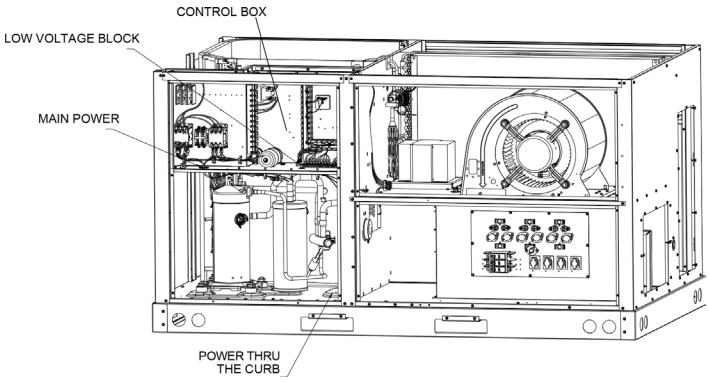

Control Box

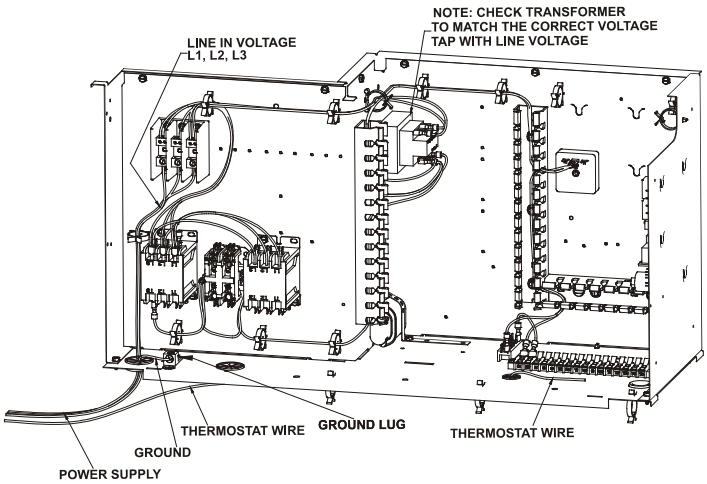

Control Box Connections

NOTE: Depending on the options installed, the location of the components may vary in some models.

WARNING

Failure of unit due to operation on improper line voltage or with excessive phase unbalance constitutes product abuse and is not covered by the warranty and may cause severe damage to the unit electrical components.

Areas Without Convenience Outlet

It is recommended that an independent 115V power source be brought to the vicinity of the roof top unit for portable lights and tools used by the service mechanic.

NOTE: Refer to local codes for requirements. These outlets can also be factory installed.

Units installed on Roof Tops

Main power and low voltage wiring may enter the unit through the condenser end of unit or through the roof curb. Install conduit connectors at the desired entrance locations. External connectors must be weatherproof. All holes in the unit base must be sealed (including those around conduit nuts) to prevent water leakage into building. All required conduit and fittings are to be field supplied.

Supply voltage to roof top unit must not vary by more than 10% of the value indicated on the unit data plate. Phase voltage unbalance must not exceed 2%. Contact your local power company for correction of improper voltage or phase unbalance.

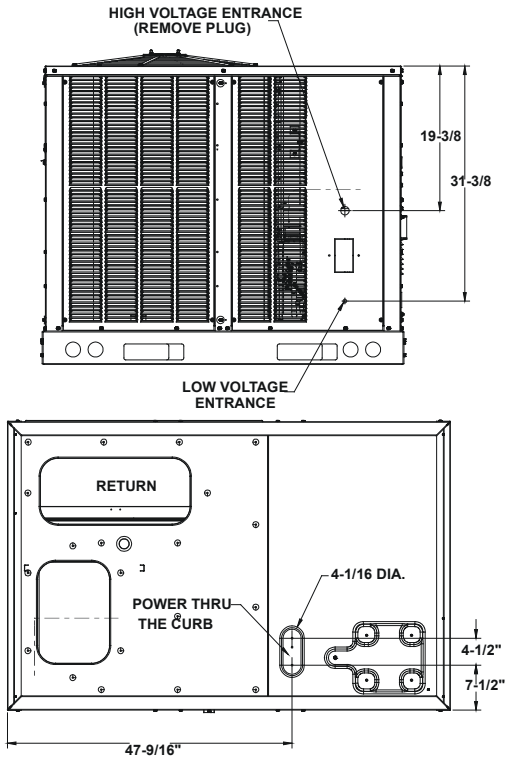

Electrical Entrance and thru Curb (Bottom View of Unit)

Low Voltage Control Wiring

1. A 24V thermostat must be installed for unit operation.
2. Locate thermostat or remote sensor in the conditioned space where it will sense average temperature. Do not locate the device where it may be directly exposed to supply air, sunlight or other sources of heat. Follow installation instructions packaged with the thermostat.
3. Use #18 AWG wire for 24V control wiring runs not exceeding 75 feet. Use #16 AWG wire for 24V control wiring runs not exceeding 125 feet. Use #14 AWG wire for 24V control wiring runs not exceeding 200 feet. Low voltage wiring may be National Electrical Code (NEC) Class 2 where permitted by local codes.
4. Route thermostat wires from sub-base terminals to the unit. Control wiring should enter through the condenser panel opening or through curb indicated in “Electrical Entrance” figure. Connect thermostat and any accessory wiring to low voltage terminal block TB1 in the main control box.

NOTE: Field-supplied conduit may need to be installed depending on unit/curb configuration. Use #18 AWG solid conductor wire whenever connecting thermostat wires to terminals on sub-base. DO NOT use larger than #18 AWG wire. A transition to #18 AWG wire may be required before entering thermostat sub-base.

NOTE: Refer to unit wiring diagrams for thermostat or remote sensor connections.

CIRCULATING AIR AND FILTERS

Ducting

Ducting work should be fabricated by the installing contractor in accordance with local codes. Industry manuals may be used as a guide when sizing and designing the duct system-such as NESCA (National Environmental Systems Contractors Association, 1501 Wilson., Arlington, Virginia 22209).

False ceilings or drop ceilings may be used as a return air plenum.

NOTE: Adequate return grills have to be supplied for each room for proper return for that space.

The unit should be placed as close as possible to the space to be air-conditioned allowing clearance dimensions as indicated. Ducts should run as directly as possible to supply and return outlets. Use of non-flammable weatherproof flexible connectors on both supply and return connections at the unit to reduce noise transmission is recommended.

CONDENSATE DRAIN PIPING

The condensate drain connection of the evaporator is a ¾” NPT half coupling. A trap must be provided to have proper condensate draining. Install condensate drain trap as shown in FIGURE 9: CONDENSATE DRAIN TRAP PLUMBING. Ensure drain connection is 3/4” or larger. Do not operate unit without trap and ensure unit is level or slightly inclined toward drain.

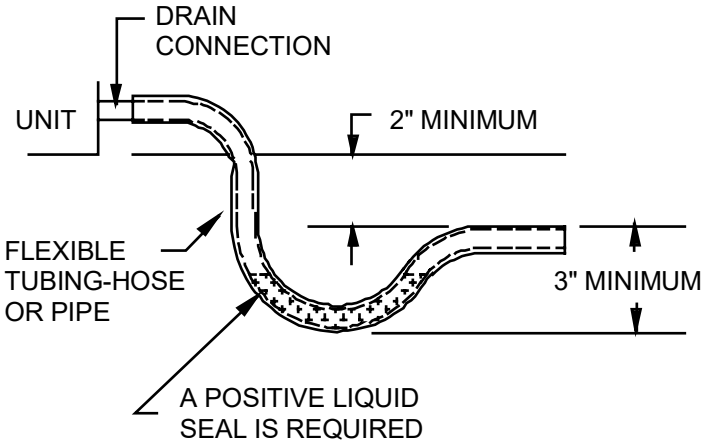

Drain Connection

Horizontal Drain

Drainage of condensate directly onto the roof may be acceptable; refer to local code. It is recommended that a small drip pad of either stone, mortar, wood or metal be provided to prevent any possible damage to the roof.

Vertical Drain
To use the bottom drain connection, remove the drain plug from the bottom connection and install it in the horizontal connection.

Cleaning
Due to the fact that drain pans in any air conditioning unit will have some moisture in them, algae and fungus will grow due to airborne bacteria and spores. Periodic cleaning is necessary to prevent this build-up from plugging the drain.

STARTUP, ADJUSTMENTS AND CHECKS

WARNING

HIGH VOLTAGE!
To avoid personal injury or death due to electrical shock, bond the frame of this unit to the building electrical ground by use of the grounding terminal provided or other acceptable means. Disconnect all power before servicing or installing this unit.

CAUTION

To prevent property damage or personal injury, do not start the unit until all necessary pre-checks and tests have been performed.

WARNING

MOVING MACHINERY HAZARD!
To prevent possible personal injury or death, disconnect power to the unit and padlock in the "OFF" position before servicing fans.

Pre-Startup Instructions
On new installations, or if a major component has been replaced, the operation of the unit must be checked.

Check unit operation as outlined in the following instructions. If any sparking, odors, or unusual sounds are encountered, shut off electrical power and recheck for wiring errors, or obstructions in or near the blower motors. **Duct covers must be removed before operating unit.**

The Startup, Adjustments, and Checks procedure provides a step-by-step sequence which, if followed, will assure the proper startup of the equipment in the minimum amount of time. Air balancing of duct system is not considered part of this procedure. The Startup, Adjustments, and Checks procedure at outside ambients below 55°F should be limited to a readiness check of the refrigeration system with the required final check and calibration left to be completed when the outside ambient rises above 55°F.

Temporary Heating Or Cooling
If the unit is to be used for temporary heating or cooling, a "Startup, Adjustments, and Checks" must first be performed in accordance with this manual. Damage or repairs due to failure to comply with these requirements are not covered under the warranty. **After** the machines are used for temporary heating or cooling, inspect the coils, fans, and motors for unacceptable levels of construction dust and dirt and install new filters.

Contractor Responsibility
The installing contractor must be certain that:

- All supply and return air ductwork is in place, properly sealed, and corresponds with installation instructions.
- All thermostats are mounted and wired in accordance with installation instructions.
- All electric power, all gas, hot water or steam line connections, and the condensate drain installation have been made to each unit on the job. These main supply lines must be functional and capable of operating all units simultaneously.
- All filters are in place.

Roof Curb Installation Check
Inspect the roof curb for correct installation. The unit and curb assembly should be level. Inspect the flashing of the roof mounting curb to the roof, especially at the corners, for good workmanship. Also check for leaks around gaskets. Note any deficiencies in a separate report and forward to the contractor.

Obstructions, Fan Clearance and Wiring
Remove any extraneous construction and shipping materials that may be found during this procedure. Rotate all fans manually to check for proper clearances and that they rotate freely. Check for bolts and screws that may have jarred loose during shipment to the job site. Re-tighten if necessary. Re-tighten all electrical connections.

Field Duct Connections
Verify that all duct connections are tight and that there is no air bypass between supply and return.

Pre-startup Precautions
It is important to your safety that the unit has been properly grounded during installation. Check ground lug connection in main control box for tightness prior to closing circuit breaker or disconnect switch. Verify that supply voltage on line side of disconnect agrees with voltage on unit identification plate and is within the utilization voltage range as indicated in Appendix B Electrical Data.

System Voltage - That nominal voltage value assigned to a circuit or system for the purpose of designating its voltage class.

Nameplate Voltage - That voltage assigned to a piece of equipment for the purpose of designating its voltage class and for the purpose of defining the minimum and maximum voltage at which the equipment will operate.

Utilization Voltage - The voltage of the line terminals of the equipment at which the equipment must give fully satisfactory performance. Once it is established that supply voltage will be maintained within the utilization range under all system conditions, check and calculate if an unbalanced condition exists between phases. Calculate percent voltage unbalance as follows:

TOTAL EXTERNAL STATIC PRESSURE

External Static Pressure Check

The total external static pressure must be checked on this unit to determine if the airflow is proper.

Total External Static Testing

1. Using a digital manometer measure the static pressure of the return duct at the inlet of the unit (Negative Pressure).

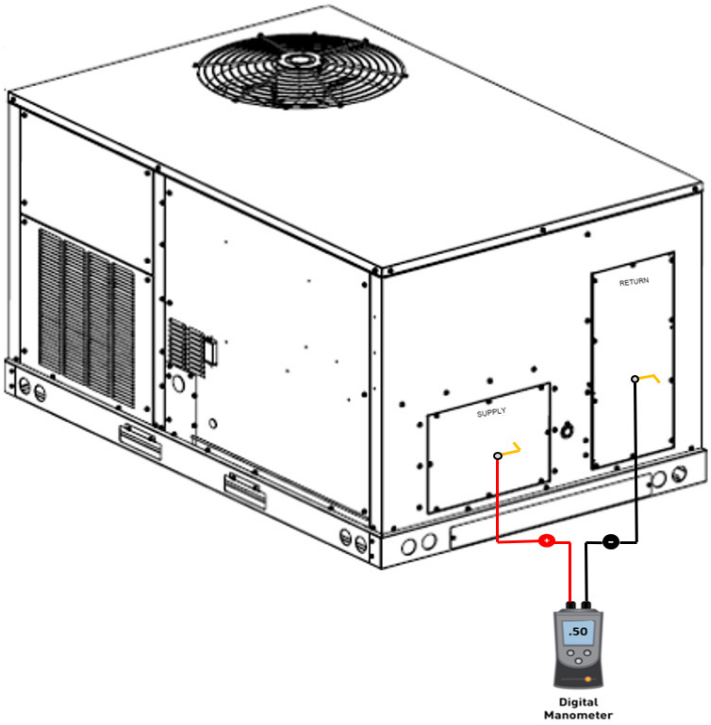

Total External Static

2. Measure the static pressure of the supply duct (Positive Pressure).
3. Add the two readings together.

Example:
Static reading from return duct = -.1” w.c.
Static reading from supply duct = .3” w.c.
Total external static pressure on this system = .4” w.c.

NOTE: Both readings may be taken simultaneously and read directly on the manometer if so desired.

4. Consult proper table for quantity of air.

If the external static pressure exceeds the maximum allowable static, check for closed dampers, dirty filter, undersized or poorly laid out ductwork.

AIR FLOW ADJUSTMENTS

When the final adjustments are complete, the current draw of the motor should be checked and compared to the full load current rating of the motor. The amperage must not exceed the service factor stamped on the motor nameplate.

If an economizer is installed, check the unit operating balance with the economizer at full outside air and at minimum outside air.

High stage airflow setting to be between 300 and 500 CFM per ton, see Table below. For models with electric heat the total airflow must not be less than that required for operation of the electric heaters. See Appendix D for minimum airflow for specific electric heaters.

NOTE: Never run CFM below 300 CFM per ton, evaporator freezing or poor unit performance is possible.

Model	Minimum	Nominal	Maximum
DP5HM6031	1500	1850	2500

High Stage Airflow Setting, CFM (without electric heat)

EEM - Standard Static Drive Motor

Adjust the CFM for the unit by changing the position of the low voltage leads on the terminal block TB1. Refer to Appendix A for blower performance at each speed tap

NOTE: If more than one lead is energized simultaneously, the motor will run at the higher speed.

Fan speed for G (Fan), Y1 (Low Cool) and W1 (Low Heat) are fixed setting on TB1/T1 and cannot be moved.

Purple wire Y2 (High Cool) and Brown wire W2 (High Heat) are connected to TB1/T2. These wires can be moved together or separately and placed on any unoccupied terminal T3-T5.

NOTE: for proper operation Y2 and W2 should have a higher speed setting than the G, Y1 and W1 speed setting.

If Electric Heater kit is installed use the red wire provided with the literature kit to jumper terminal TB1/W1 to an unoccupied speed tap that satisfies the minimum airflow required for the heater kit. This must be a different tap

than Y2 is connected to. Refer to Appendix D for minimum required airflow for electric heaters.

NOTE: On Heat Pump units, the Yellow (YL) wire from relay BR1 to TB1/T2 must always be moved to the same terminal location as the Brown (BR) wire after adjustments are made, to ensure proper blower speed during defrost operation.

SUPERHEAT AND SUBCOOLING

Checking Subcooling

NOTE: Units with a TXV should be charged to Subcooling only.

EXAMPLE:

a. Liquid Line Pressure = 417 PSI
b. Corresponding Temp. = 120°F
c. Thermometer on Liquid line = 109°F.

To obtain the amount of subcooling, subtract 109°F from 120°F. The difference is 11° subcooling. See the specification sheet or technical information manual for the design subcooling range for your unit.

SUBCOOLING FORMULA = SATURATED LIQUID LINE TEMPERATURE - LIQUID LINE TEMPERATURE

Checking Superheat

EXAMPLE:

a. Suction Pressure = 143 PSI
b. Corresponding Temp. = 50°F
c. Thermometer on Suction Line = 59°F

To obtain the degrees temperature of superheat, subtract 50.0 from 59.0°F. The difference is 9° Superheat. The 9° Superheat would fall in the ± range of allowable superheat.

SUPERHEAT = SUCTION LINE TEMP - SAT. SUCTION TEMP.

TXV Superheat Adjustment

NOTE: Superheat adjustments should not be made until indoor ambient conditions have stabilized. This could take up to 24 hours depending on indoor temperature and humidity. Before checking superheat, run the unit in cooling for 15-20 minutes or until refrigerant pressure stabilizes.

NOTE: TXV adjustments should not exceed one turn clockwise (CW) or counterclockwise (CCW) from the factory setting.

Unscrew the cover from the expansion valve, locate the adjustment screw, and turn in clockwise (in) to increase superheat or counterclockwise (out) to decrease superheat. It is recommended to make small adjustments at a time, 1/8 - 1/4 turn increments. Replace adjustment cap. Wait a minimum of 15 minutes between adjustments to allow time for the TXV and pressure to stabilize.

Refrigerant Charge Check

NOTE: For optimal performance, follow charging instructions below.

Units with TXV

Single Stage Cooling Application: Refer to the Design Superheat & Subcooling table.

Two-Stage Cooling Application: Run unit on Low Stage cooling and refer to Design Superheat & Subcooling table.

1. Purge gauge lines. Connect service gauge manifold to access fittings. Run system at least 10 minutes to allow pressure to stabilize.
2. Temporarily install thermometer on liquid (small) line near liquid line access fitting with adequate contact and insulate for best possible reading.
3. Check subcooling and superheat. System should have a subcooling and superheat within the range listed on the Design Superheat and Subcooling table.
   a. If subcooling and superheat are low, adjust TXV superheat, then check subcooling.
   NOTE: To adjust superheat, turn the valve stem clockwise to increase and counterclockwise to decrease. Refer to TXV Superheat Adjustment referenced in this manual.
   b. If subcooling is low and superheat is high, add charge to raise subcooling then check superheat.
   c. If subcooling and superheat are high, adjust TXV valve superheat, then check subcooling.
   d. If subcooling is high and superheat is low, adjust TXV valve superheat and remove charge to lower the subcooling.
   NOTE: Do NOT adjust the charge based on suction pressure unless there is a gross undercharge. If an under charge is suspected, recover the charge, re-evacuate the system, and recharge per data plate. No adjustments should be made if suspecting a charge issue.
4. Disconnect manifold set, installation is complete.

Design Superheat & Subcooling					
Model	Superheat ±2°F	Subcooling ±1°F	Expansion Device	Cooling Stage	Outdoor Ambient (°F)
DP5HM6031	16.0	8.0	TXV	Low	82

NOTE: Subcooling should be measured at outdoor liquid line.

NOTE: Superheat should be measured at compressor suction line.

RDS Function

The mitigation system is a stationary device that detects the presence of R-32 refrigerant above 25% LFL using refrigerant sensors and then initiates mitigation actions.

The mitigation system's primary function is to reduce the concentration of leaked R-32 refrigerant to prevent serious safety hazards. The mitigation actions are accomplished by halting HVAC operation and continuing indoor blower operation to provide airflow. Once refrigerant concentration reaches below a safe threshold, the unit will remain in mitigation mode for five minutes to evacuate any remaining R-32 refrigerant within the unit. Upon completion, the unit will resume its normal operation.

RDS Operation

The mitigation system is controlled by a refrigerant sensor(s), which is secured to a designated location(s) for active monitoring. If a leak is detected, HVAC operation is disabled and the indoor blower fan is activated, providing airflow at or above minimum required airflow to evacuate excess concentration. If a Zone Control system is installed in the ductwork attached to this system, the Zone controller must be powered through a Daikin Zoning/Accessory PCB to ensure that the Zoning Dampers open during mitigation mode to provide ventilation throughout all ducting. Once sensor(s) read concentration levels below a safe threshold, a five-minute timer will initiate. Once the time is over, the unit will resume back to its normal operation. If the sensor(s) detect another concentration excess, the unit will go back into mitigation mode and will repeat the same process.

START-UP PROCEDURES AND CHECKLIST

WARNING

HIGH VOLTAGE!
Disconnect all power before servicing or installing this unit. Multiple power sources may be present. Failure to do so may cause property damage, personal injury or death.

Begin with power turned off at all disconnects.

Heat Pump Start-Up Procedure

1. Check the cooling mode for the heat pump in the same manner as above. The reversing valve is energized when the thermostat is placed in the cooling position. A clicking sound should be noticeable from the reversing valve. By lowering the temperature setting to call for cooling, the solenoid valve is energized. The compressor, blower and fan should then be running. After the cooling mode is checked out, turn the thermostat system switch to "OFF".
2. Turn the thermostat system switch to "HEAT" and fan switch to "AUTO".
3. Slowly raise the heating temperature setting. When the heating first stage makes contact, stop raising the temperature setting. The compressor, blower and fan should now be running with the reversing valve in the de-energized (heating) position. After giving the unit time to settle out, make sure the unit is supplying heated air.
4. If the outdoor ambient is above 80°F, the unit may trip on its high-pressure cutout when in heating mode. The compressor should stop. The heating cycle must be thoroughly checked, so postpone the test to another day when conditions are more suitable but, DO NOT FAIL TO TEST.
5. If the outdoor ambient is low and the unit operates properly in the heating cycle, you may check the pressure cutout operation by blocking off the indoor return air until the unit trips.
6. If unit operates properly in the heating cycle, raise the temperature setting until the heating second stage makes contact. Supplemental resistance heat, if installed should now come on. Make sure it operates properly.

NOTE: 15.2 SEER2 model has two stages of compressor heat. During resistance heat test, increase temperature setting until third stage heat is energized.

NOTE: If outdoor thermostats are installed the outdoor ambient must be below the set point of these thermostats for the heaters to operate. It may be necessary to jumper these thermostats to check heater operation if outdoor ambient is mild.

If the outdoor ambient is low and the unit operates properly in the heating cycle, you may check the pressure cutout operation by blocking off the indoor return air until the unit trips. If unit operates properly in the heating cycle, raise the temperature setting until the heating second stage makes contact. Supplemental resistance heat, if installed should now come on. Make sure it operates properly.

7. THERMOSTATS WITH EMERGENCY HEAT. For thermostats with an emergency heat switch, raise the temperature setting until the heating second stage makes contact. The emergency heat switch is located at the bottom of the thermostat. Move the switch to emergency heat. The heat pump will stop, the blower will continue to run, all heaters will come on and the thermostat emergency heat light will come on.
8. If checking the unit in the wintertime, when the outdoor coil is cold enough to acuate the defrost control, observe at least one defrost cycle to make sure the unit defrosts completely.

Final System Checks

1. Check to see if all supply and return air grilles are adjusted and the air distribution system is balanced for the best compromise between heating and cooling.
2. Check for air leaks in the ductwork.
3. Check air flow and refrigerant charge. See Sections on **Air Flow Measurement and Adjustment** and **Refrigerant Charge Check.**

4. Ensure the unit is free of “rattles”, and the tubing in the unit is free from excessive vibration. Also make sure tubes or lines are not rubbing against each other or sheet metal surfaces or edges. If discovered, ensure issue is corrected.
5. Set the thermostat at the appropriate setting for cooling and heating or automatic changeover for normal use.
6. Ensure the Owner is instructed on the unit operation, filter, servicing, correct thermostat operation, etc.

Check that compressor RLA corresponds to values shown in Appendix B. RLA draw can be much lower than values listed at low load conditions and low ambient condensing temperatures. Values in Appendix B can slightly exceed at high load conditions and high ambient condensing temperatures.

HEAT PUMP OPERATION

Cooling Cycle

When the heat pump is in the cooling cycle, it operates exactly as an Air Conditioner Unit.

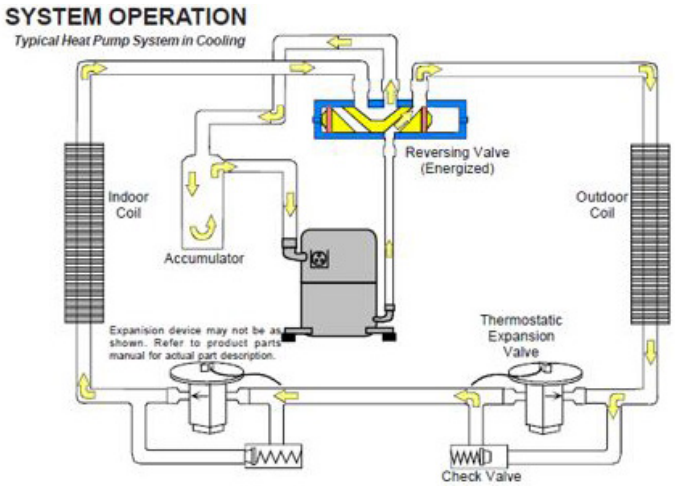

Heating Cycle

The heat pump operates in the heating cycle by redirecting refrigerant flow through the refrigerant circuit external to the compressor. This is accomplished with the reversing valve. Hot discharge vapor from the compressor is directed to the indoor coil (evaporator on the cooling cycle) where the heat is removed, and the vapor condenses to liquid.

It then goes through the expansion device to the outdoor coil (condenser on the cooling cycle) where the liquid is evaporated, and the vapor goes to the compressor.

When the solenoid valve coil is operated either from heating to cooling or vice versa, the piston in the reversing valve to the low pressure (high pressure) reverse positions in the reversing valve. The following figure shows a schematic of the heat pump in the heating cycle.

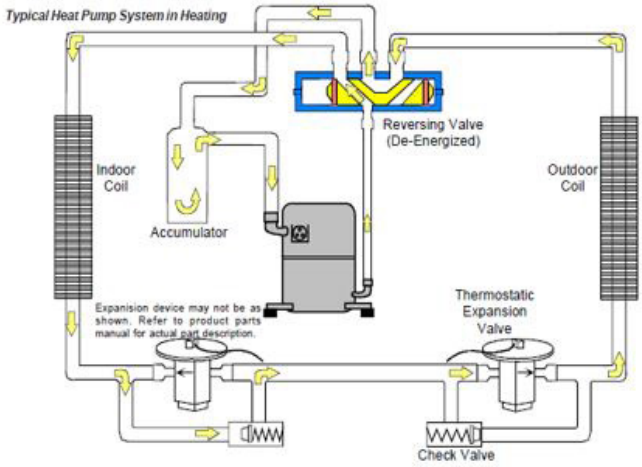

For Heat Pump units, the expansion devices are Fixed Thermal Expansion Devices (TXV) and perform the same function on the heating cycle as on the cooling cycle. The Fixed TXV also act as check valves to allow for the reverse of refrigerant flow.

When the heat pump is on the heating cycle, the outdoor coil is functioning as an evaporator. The temperature of the refrigerant in the outdoor coil must be below the temperature of the outdoor air in order to extract heat from the air. Thus, the greater the difference in the outdoor temperature and the outdoor coil temperature, the greater the heating capacity of the heat pump. This phenomenon is a characteristic of a heat pump. It is a good practice to provide supplementary heat for all heat pump installations in areas where the temperature drops below 45°F. It is also a good practice to provide sufficient supplementary heat to handle the entire heating requirement should there be a component failure of the heat pump, such as a compressor, or refrigerant leak, etc.

Since the temperature of the liquid refrigerant in the outdoor coil on the heating cycle is generally below freezing point, frost forms on the surfaces of the outdoor coil under certain weather conditions of temperature and relative humidity. Therefore, it is necessary to reverse the flow of the refrigerant to provide hot gas in the outdoor coil to melt the frost accumulation. This is accomplished by reversing the heat pump to the cooling cycle. At the same time, the outdoor fan stops to hasten the temperature rise of the outdoor coil and lessen the time required for defrosting. The indoor blower continues to run, and the supplementary heaters are energized.

Defrost Control

During operation the power to the circuit board is controlled by a temperature sensor, which is clamped to a feeder tube entering the outdoor coil. Defrost timing periods of 30,60 and 90 minutes may be selected by setting the circuit board jumper to 30, 60 and 90 respectively. Accumulation of time for the timing period selected starts when the sensor closes (approximately 30°± 5°F), and when the wall thermostat calls for heat. At the end of the timing period,

the unit's defrost cycle will be initiated provided the sensor remains closed. When the sensor opens (approximately 60°± 5°F), the defrost cycle is terminated and the timing period is reset. If the defrost cycle is not terminated due to the sensor temperature, a twelve-minute override interrupts the unit's defrost period.

TROUBLESHOOTING

Suggested Field Testing/Troubleshooting

Testing Defrost Control

NOTE: PCBDM161 Defrost controls have a three (3) minute compressor off cycle delay.

NOTE: The PCBDM161 defrost controls are shipped from the factory with the compressor delay option selected. This will de-energize the compressor contactor for 30 seconds on defrost initiation and defrost termination. If the jumper is set to normal, the compressor will continue to run during defrost initiation and defrost termination. The control will also ignore the low-pressure switch connected to R-PS1 and PS2 for 5 minutes upon defrost initiation and 5 minutes after defrost termination.

To check the defrost control for proper sequencing, proceed as follows: With power ON; unit not running.

1. Jumper defrost thermostat by placing a jumper wire across the terminals "DFT" and "R"/" R-DFT" at defrost control board.
2. Remove jumper from timer pins and jump across test pins on defrost control board.
   NOTE: Do not use screwdriver or field supplied jumper to test the control.
3. Set thermostat to call for heating. System should go into defrost within 23 seconds.
4. Immediately remove jumper from test pins.
5. Using VOM (Volt Ohm Meter) check for voltage across terminals "C & O". Meter should read 24 volts.
6. Using VOM check for voltage across fan terminals DF1 and DF2 on the board. Should read line voltage (208-230 VAC) indicating the relay is open in the defrost mode.
7. Using VOM check for voltage across "W"/"W2" & "C" terminals on the board. Should read 24 volts.
8. If not as above, replace control board.
9. Set thermostat to off position and disconnect power. Remove jumper from defrost thermostat and replace timer jumper to the desired defrost time.

NOTE: Remove jumper across defrost thermostat before returning system to service.

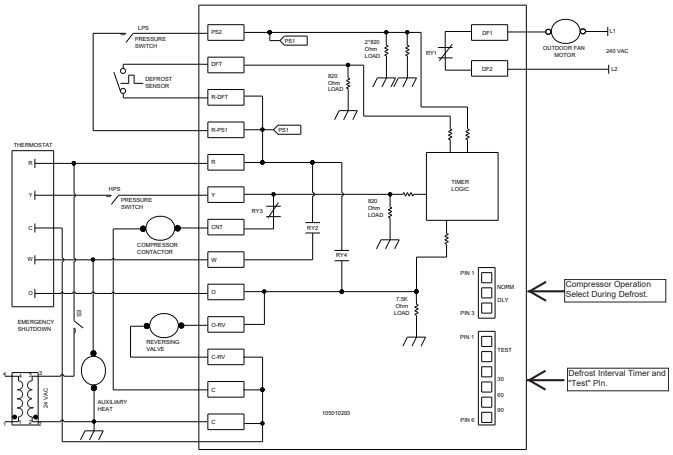

PCBDM161 Defrost Control PCB

Testing Defrost Thermostat

1. Install a thermocouple type temperature test lead on the tube adjacent to the defrost control. Insulate the lead point of contact.
2. Check the temperature at which the control closes its contacts by lowering the temperature of the control. It should close at approximately 30°F.
3. Check the temperature at which the control opens its contacts by raising the temperature of the control. It should open at approximately 60°F.
4. If not as above, replace control.

REVERSING VALVE TROUBLESHOOTING

Checking Reversing Valve and Solenoid

Reversing valve used in heat pumps could potentially leak internally. Discharge gases can leak into the suction inside the valve. Compound gages will give the same symptoms as bad compressor valves or broken scroll flanks. The temperature between true suction and the suction line after the valve should not be greater than 4 degrees. Note: The center tube is always the suction line and should be cold.

Troubleshooting the Reversing Valve for Electrical Failure

1. Place unit into the cooling mode. Test for 24 volts at the solenoid. If there is no voltage present at coil, check the control voltage.
2. If voltage is present, loosen the nut on the top of the coil. Remove the coil, there should be slight resistance.
3. If the slight resistance is felt, remove the coil. As you remove the coil listen carefully, an audible click should be detected. The clicking is due to the movement of the pilot valve plunger. The absence of a clicking sound indicates the plunger is stuck.

Troubleshooting Mechanical Failures on a Reversing Valve by Pressure

1. Troubleshooting the reversing valve can be done by pressure and touch.

2. Raise the head pressure. In the cooling mode block the fan exhaust. Once head pressure has been raised, cycle between cooling and heating and see if the piston can be freed.

Troubleshooting Mechanical Failures on a Reversing Valve by Temperature

1. When operating properly the valve contains refrigerant gases at certain temperatures.
2. The discharge line should be the same temperature after the valves discharge line.
3. The true suction should be the same as the suction line after the valve. If there is a 4-degree difference, valve is leaking.

When stuck in the mid-position, part of the discharge gas from the compressor is directed back to the suction side, resulting in excessively high suction pressure. An increase in the suction line temperature through the reversing valve can also be measured. Check operation of the valve by starting the system and switching the operation from COOLING to HEATING cycle.

If the valve fails to change its position, test the voltage (24V) at the valve coil terminals, while the system is on the COOLING cycle.

If voltage is registered at the coil, tap the valve body lightly while switching the system from HEATING to COOLING, etc. If this fails to cause the valve to switch positions, remove the coil connector cap and test the continuity of the reversing valve solenoid coil. If the coil does not test continuous - replace it. If the coil test continuous and 24 volts is present at the coil terminals, the valve is inoperative - replace it.

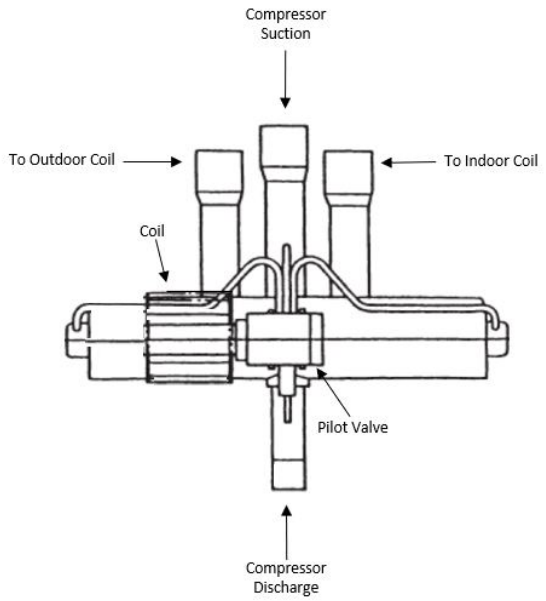

Reversing Valve

MAINTENANCE

CAUTION

Sheet metal parts, screws, clips and similar items inherently have sharp edges, and it is necessary that the installer and service personnel exercise caution.

The Self Contained Packaged Heat Pump should operate for many years without excessive service calls if the unit is installed properly. However it is recommended that the owner inspect the unit before a seasonal start up. The coils should be free of debris so adequate airflow is achieved. The return and supply registers should be free of any obstructions. The filters should be cleaned or replaced. These few steps will help to keep the product up time to a maximum. The Service section that follows should help in identifying problems if the unit does not operate properly.

Filters

CAUTION

To prevent property damage due to fire and loss of equipment efficiency or equipment damage due to dust and lint build up on internal parts, never operate unit without an air filter installed in the return air system.

Every application may require a different frequency of replacement of dirty filters. Filters must be replaced at least every three (3) months during operating seasons.

Dirty filters are the most common cause of inadequate heating or cooling performance. Filter inspection should be made at least every two months; more often if necessary because of local conditions and usage.

Dirty throwaway filters should be discarded and replaced with a new, clean filter.

Disposable return air filters are supplied with this unit. See the unit Specification Sheet or Technical Manual for the correct size and part number. To remove the filters, remove the filter access panel on return side of the unit.

Cabinet Finish Maintenance

Use a fine grade automotive wax on the cabinet finish to maintain the finish's original high luster. This is especially important in installations with extended periods of direct sunlight.

Clean Outside Coil (Qualified Servicer Only)

The coil with the outside air flowing over it should be inspected annually and cleaned as frequently as necessary to keep the finned areas free of lint, hair and debris.

Clean Indoor Coil (Qualified Servicer Only)

Before cleaning the indoor coil, A2L sensor must be removed from the unit to avoid damage and contamination. Air filters should also be removed before performing maintenance. The coil with the filtered air flowing over it should be inspected and cleaned as frequently as necessary to keep the finned areas free of debris. Coil cleaning should be performed, utilizing an approved cleaning method and cleaning agent, from inside-out (opposite operating airflow direction) to prevent damage to the tube, fin coil, and any other components. Prior to resuming unit operation, be sure to reinstall the A2L sensor.

Lubrication

The supply fan motors, the condenser fan motors and compressors are permanently lubricated.

Functional Parts

Refer to the unit Parts Catalog for a list of functional parts. Parts are available from your distributor.

WARNING

HIGH VOLTAGE!
Disconnect all power before servicing or installing this unit. Multiple power sources may be present. Failure to do so may cause property damage, personal injury or death.

WARNING

To prevent personal injury or death due to improper installation, adjustment, alteration, service or maintenance, refer to this manual. For additional assistance or information, consult a qualified installer, servicer agency or the gas supplier.

Recovery

When removing refrigerant from a system, either for servicing or decommissioning, it is recommended good practice that all refrigerants are removed safely. When transferring refrigerant into cylinders, ensure that only appropriate refrigerant recovery cylinders are employed. Ensure that the correct number of cylinders for holding the total system charge is available. All cylinders to be used are designated for the recovered refrigerant and labeled for that refrigerant (i.e. special cylinders for the recovery of refrigerant). Cylinders shall be complete with pressure-relief valve and associated shut-off valves in good working order. Empty recovery cylinders are evacuated and, if possible, cooled before recovery occurs.

The recovery equipment shall be in good working order with a set of instructions concerning the equipment that is at hand and shall be suitable for the recovery of the flammable refrigerant. If in doubt, the manufacturer should be consulted. In addition, a set of calibrated weighing scales shall be available and in good working order. Hoses shall be complete with leak-free disconnect couplings and in good condition.

The recovered refrigerant shall be processed according to local legislation in the correct recovery cylinder, and the relevant waste transfer note arranged. Do not mix refrigerants in recovery units and especially not in cylinders.

If compressors or compressor oils are to be removed, ensure that they have been evacuated to an acceptable level to make certain that flammable refrigerant does not remain within the lubricant. The compressor body shall not be heated by an open flame or other ignition sources to accelerate this process. When oil is drained from a system, it shall be carried out safely.

Charging Procedures

In addition to conventional charging procedures, the following requirements shall be followed.

- Ensure that contamination of different refrigerants does not occur when using charging equipment.
- Hoses or lines shall be as short as possible to minimize the amount of refrigerant contained in them.
- Cylinders shall be kept in an appropriate position according to the instructions.
- Ensure that the refrigerating system is grounded prior to charging the system with refrigerant.
- Extreme care shall be taken not to overfill the REFRIGERATING SYSTEM.

Prior to recharging the system, it shall be pressure- tested with the appropriate purging gas.

The system shall be leak-tested on completion of charging but prior to commissioning. A follow up leak test shall be carried out prior to leaving the site.

NOTE: "Earthing" is defined as achieving an earth ground by connecting the equipment's supplied grounding lug to the earth. This should be verified by a certified technician.

Servicing Measures for the Refrigerant Detection System

Before servicing, identify the mode of operation of the system by reading the LED flashing pattern on the PCB within the control box and matching the LED flashing pattern with mode of operation in the REFRIGERANT DETECTION SYSTEM TROUBLESHOOTING GUIDE on the wiring diagram which is attached on the back side of the control box panel (RDS PCB Fault Code table). After identifying the mode of operation, take recommended actions as specified in the Recommended Actions for PCB LED Flashing Codes table.

REFRIGERANT SENSORS for REFRIGERANT DETECTION SYSTEMS shall only be replaced with sensors specified by the manufacturer. If REFRIGERANT SENSOR requires replacement, please replace with Sensata R32 Sensor PN#RGD-00ML12 (Daikin PN#SER2A08012).

LED STATUS	
MODE	**LED FLASHING PATTERN**
NORMAL OPERATION	SLOW LED FLASHING PATTERN (2 SECONDS ON 2 SECONDS OFF)
R-32 LEAK ALARM	FAST LED FLASHING PATTERN
DELAY MODE	LED WILL BE ON CONTINUOUSLY
SYSTEM VERIFICATION MODE	FAST LED FLASHING PATTERN
CONTROL BOARD INTERNAL FAULT	LED WILL FLASH 2 TIMES AND THEN BE OFF FOR 5 SECONDS
R32 SENSOR COMMUNICATION FAULT	LED WILL FLASH 3 TIMES AND THEN BE OFF FOR 5 SECONDS
R32 SENSOR FAULT	LED WILL FLASH 4 TIMES AND THEN BE OFF FOR 5 SECONDS

RDS PCB Fault Code Table

TROUBLESHOOTING CODE

LED TROUBLESHOOT STATUS					
	MODE	DEFINITION	LED FLASHING PATTERN	RECOMMENDED ACTIONS	NOTES
1	Normal Operation	No faults to report.	Slow LED flashing pattern (2 seconds on and 2 seconds off)	No actions needed.	
2	R32 Leak Alarm	R32 leak is currently being detected.	Fast LED Flashing Pattern	A technician will need to find the refrigerant leak and address it. Unit shall be thawed before servicing.	In terms of the controls, no action is needed. The controls and sensor are working fine.
3	Delay Mode	After R32 leak or alarm has been cleared, the unit will remain in alarm mode for 5 minutes before returning to normal operation.	LED will be on continuously	No action needed - If the system was previously experiencing an actual R32 Leak, the refrigerant can no longer be detected by the sensor meaning it's either gone and the system won't work anymore or there was a false alarm. If the system was experiencing a Fault, the fault is gone and the system will return to normal operation in 5 min.	After any alarm or fault, it is required to remain in R32 mitigation mode for 5 minutes.
4	System Verification Mode	Manual test run by contractor to simulate R32 Leak Alarm (test will last for 5 minutes max).	Fast LED Flashing Pattern	No actions needed.	To enter system verification test mode, press the button on the control 2 times within 5 seconds. The control will enter a simulated R32 Leak Alarm state and remain in that mode for 5 minutes. After 5 minutes, the control will return to Normal Operation automatically. If the contractor wants to end the test early they need to press the button one time.
5	Control Board Internal Fault	Control board has detected an issue with the R32 detection system.	LED will flash 2 times and then be off for 5 seconds, before repeating pattern	1) Unplug and plug the R32 sensor back in. Cycle power to the system. 2) If the control is in "Normal Operation" or "Delay Mode", there is no more issue. If not, continue with diagnostics 3) Unplug R32 sensor and leave unplugged. Cycle power to the system 4) If the control still displays "Control Board Internal Fault" (2 flash pattern), replace the control. If the control now displays "R32 Sensor Communication Fault" (3 flash pattern), replace the sensor.	This error could indicate an on board relay failure or a short with the sensor communications. A sensor communication short could occur on the board itself or external to the board. These steps will determine if the error is on the board or external to the board.
6	R32 Sensor Communication Fault	Control board does not have communications with R32 sensor.	LED will flash 3 times and then be off for 5 seconds, before repeating pattern	1) Unplug and plug the R32 sensor back in. Cycle power to the system. 2) If control is in "Normal Operation" or "Delay Mode", there is no more issue. If not, continue with diagnostics. 3) If the control still displays "R32 Sensor Communication Fault" (3 flash pattern), replace both the sensor and the PCB.	If the control cannot talk to the sensor there could be a problem with the sensor, a problem with the sensor harness or a problem internal to the control. The field will not be able to measure anything to reliably fix this error assuming the connector is properly secured to the control. Replacing both is the only option.
7	R32 Sensor Fault	R32 Sensor has reported an internal issue.	LED will flash 4 times and then be off for 5 seconds, before repeating pattern	Replace R32 sensor.	Communications to the sensor are perfectly fine. The sensor itself is reporting an internal fault.

Recommended Actions for PCB LED Flashing Codes Table

	warning; flammable materials
	service indicator; read technical manual
	operator's manual; operating instructions
	warning; low burning velocity material
	UN GHS flame symbol

Marking Symbol Table

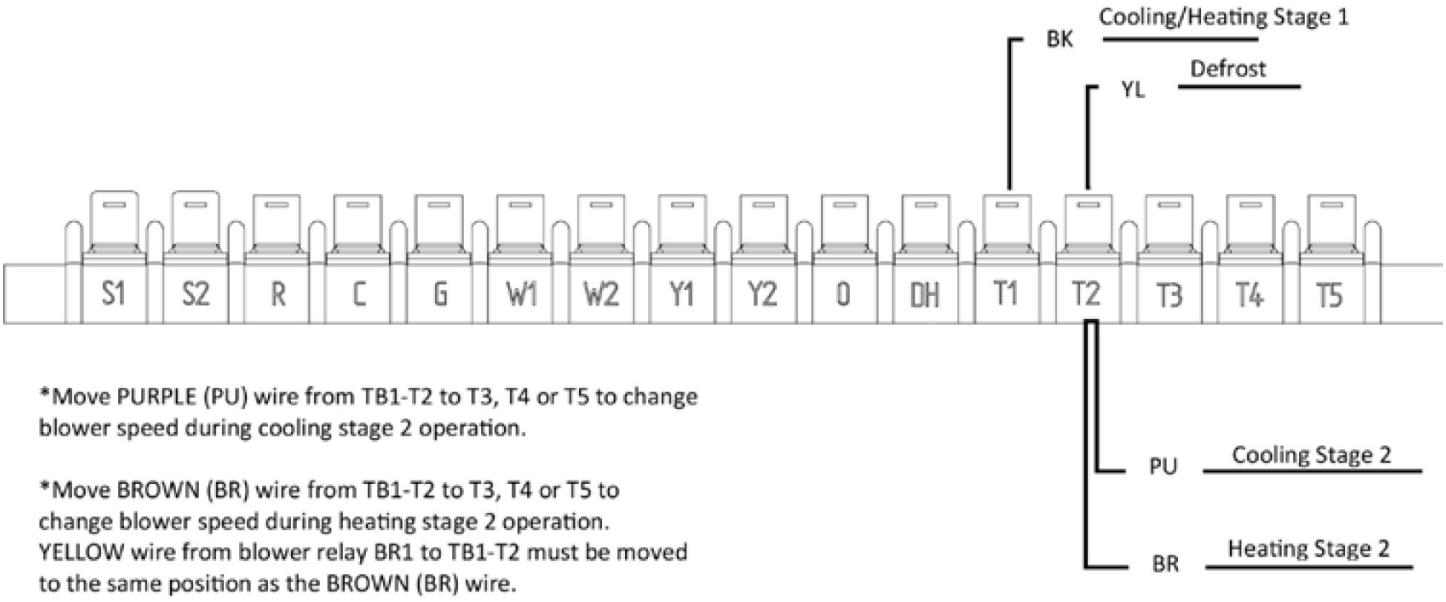

*Move PURPLE (PU) wire from TB1-T2 to T3, T4 or T5 to change blower speed during cooling stage 2 operation.

*Move BROWN (BR) wire from TB1-T2 to T3, T4 or T5 to change blower speed during heating stage 2 operation. YELLOW wire from blower relay BR1 to TB1-T2 must be moved to the same position as the BROWN (BR) wire.

Wiring Example

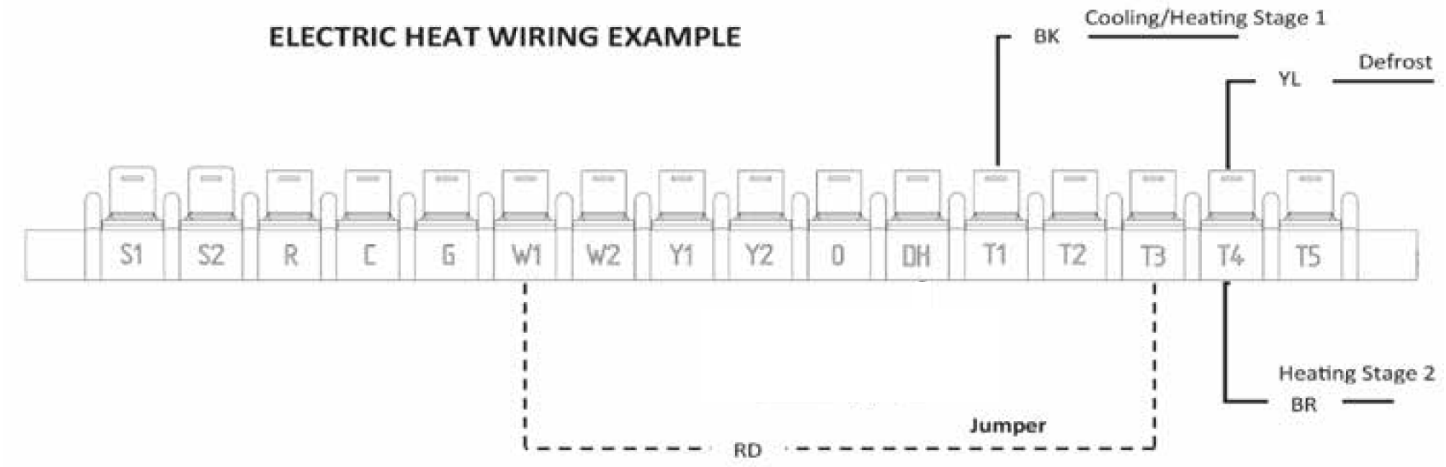

*Move BROWN (BR) wire from TB1-T2 to T3, T4 or T5 to change blower speed during heating stage 2 operation. YELLOW wire from blower relay BR1 to TB1-T2 must be moved to the same position as the BROWN (BR) wire.

*Install RED jumper to connect TB1-W1 and unoccupied speed tap to change blower speed during heating.

Electric Heat Wiring Example

APPENDIX A BLOWER PERFORMANCE TABLES - HEAT PUMP

Downflow				
Speed Tap	External Static	SCFM	RPM	BHP
T1*	0.2	1335	650	0.22
	0.4	1220	730	0.24
	0.6	1090	820	0.27
	0.8	975	890	0.3
T2* *	0.2	2045	885	0.64
	0.4	1970	930	0.67
	0.6	1890	960	0.71
	0.8	1800	1040	0.75
T3	0.2	2035	880	0.63
	0.4	1955	925	0.66
	0.6	1875	975	0.7
	0.8	1785	1040	0.74
T4	0.2	2280	965	0.86
	0.4	2205	1010	0.9
	0.6	2130	1055	0.94
	0.8	2050	1105	0.99
T5	0.2	2345	990	0.94
	0.4	2270	1035	0.99
	0.6	2195	1080	1.03
	0.8	2120	1125	1.07

Horizontal				
Speed Tap	External Static	SCFM	RPM	BHP
T1*	0.2	1350	655	0.22
	0.4	1230	735	0.24
	0.6	1100	830	0.28
	0.8	985	900	0.3
T2* *	0.2	2065	895	0.65
	0.4	1990	940	0.68
	0.6	1910	990	0.72
	0.8	1820	1050	0.76
T3	0.2	2055	890	0.64
	0.4	1975	935	0.67
	0.6	1895	985	0.7
	0.8	1805	1050	0.75
T4	0.2	2305	975	0.87
	0.4	2225	1020	0.91
	0.6	2150	1065	0.95
	0.8	2070	1115	1
T5	0.2	2370	1000	0.95
	0.4	2295	1045	0.99
	0.6	2215	1090	1.04
	0.8	2140	1135	1.08

T1 VALUES ARE FOR FAN MODE OR PART LOAD ONLY. T2 VALUES ARE FOR PART LOAD ONLY.

APPENDIX B UNIT DIMENSIONS

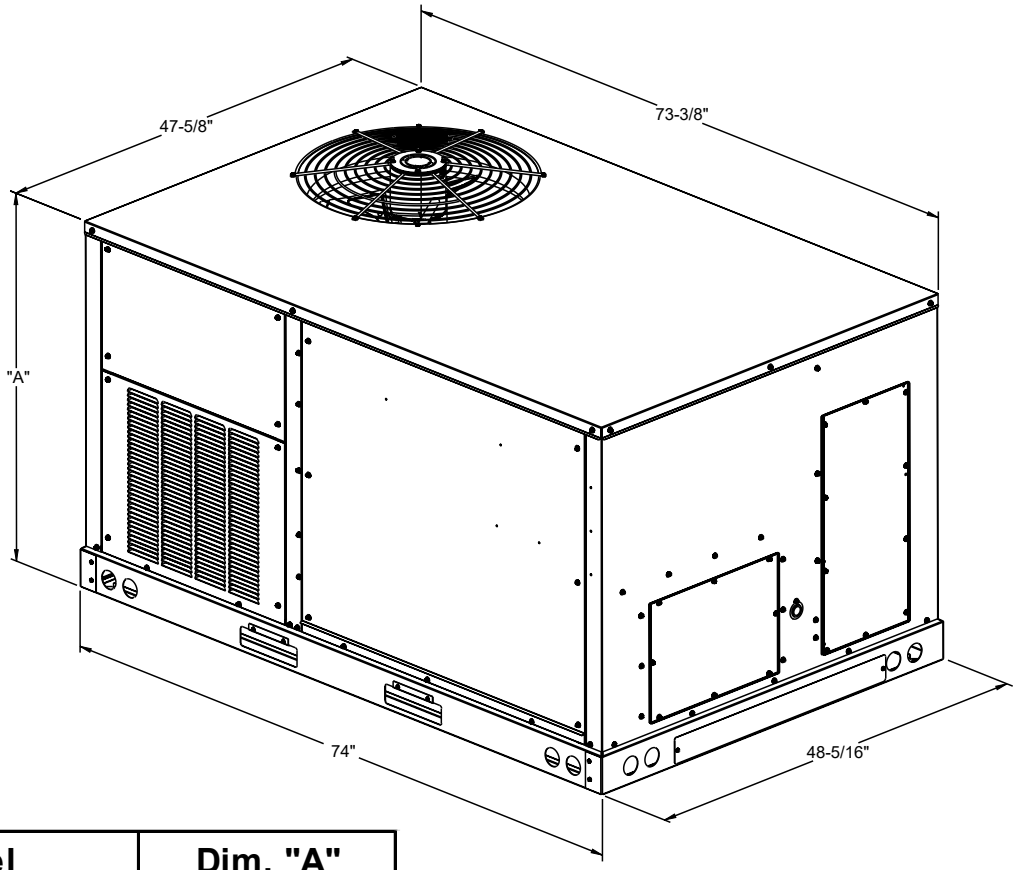

Model	Dim. "A"
5 Ton Heat Pump	43-1/2"

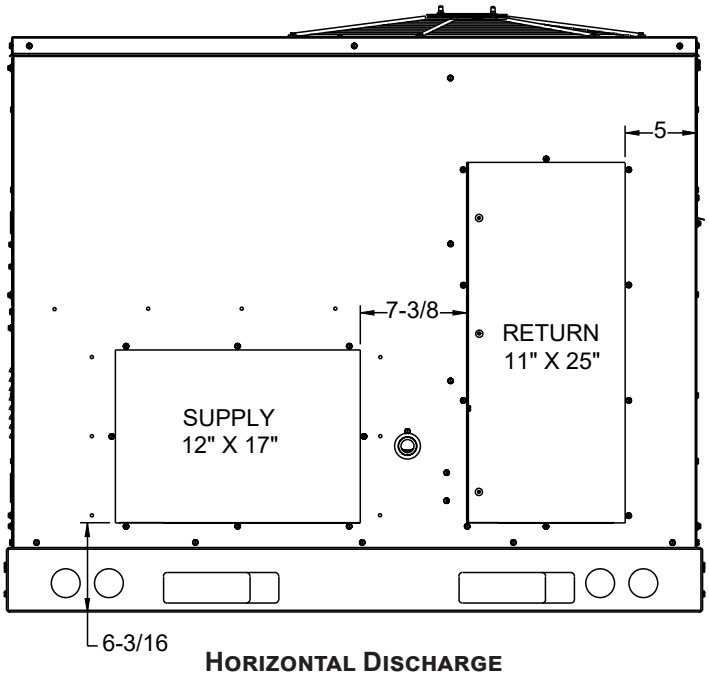

HORIZONTAL DISCHARGE

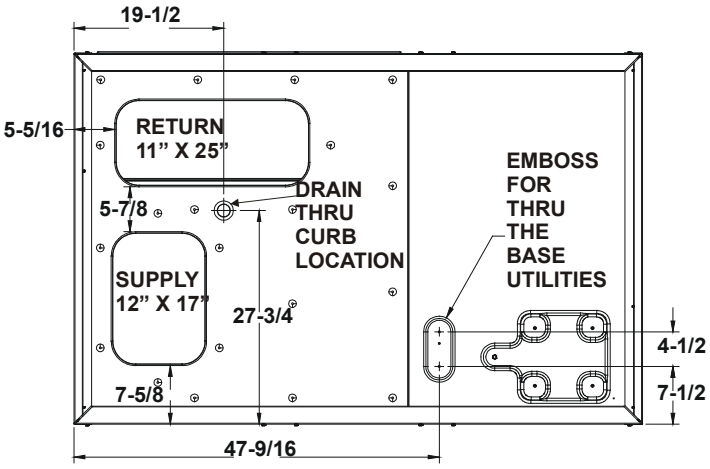

BOTTOM VIEW OF UNIT

VERTICAL DISCHARGE

NOTE: REFER TO IOD-7019 INCLUDED IN THE LITERATURE PACK FOR INSTALLING HORIZONTAL DUCT COVERS.

APPENDIX C AIR FLOW FOR ELECTRIC HEAT

UNIT	HEATER KIT MODEL NUMBER	kW	MINIMUM SCFM	MAXIMUM SCFM
DP5HM6031	EH*-*S05	5	1500	2500
	EH*-*S10	10	1500	
	EH*-*S15	15	1500	
	EH*-*S20	20	1550	

Model	Heater Kit	Circuit #1		Actual @240V		SCFM	
		MCA*	MOP**	kW	Btu/hr	Min	Max
DP5HM6031AB	EHXD-1S05A	65.1	80	5	17,000	1500	2500
	EHXD-1S10A	91.1	100	10	34,000		
	EHXD-1S15A	117.2	125	15	51,000		
	EHXD-1S22A	143.2	150	20	68,200		
*-Minimum Circuit Ampacity @ 208/240V							
**-Maximum Overcurrent Protection Device @ 208/240V							

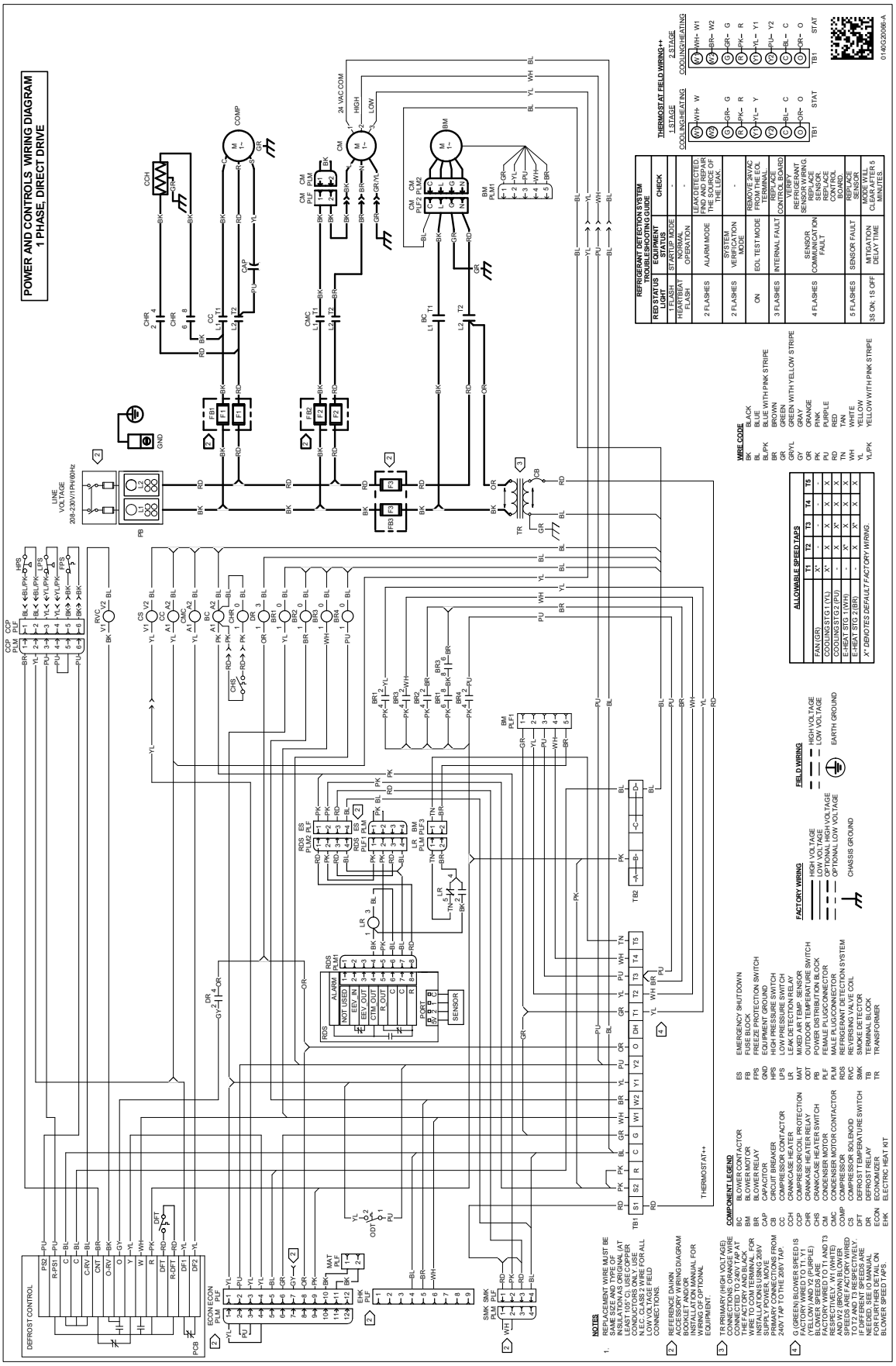

Wiring is subject to change. Always refer to the wiring diagram on the unit for the most up-to-date wiring.

START-UP CHECKLIST

Residential Package - (Indoor Section)					
		Model Number			
		Serial Number			
ELECTRICAL					
Line Voltage (Measure L1 and L2 Voltage)	L1 - L2				
Secondary Voltage (Measure Transformer Output Voltage)	R - C				
Blower Amps					
Heat Strip 1 - Amps					
Heat Strip 2 - Amps					
BLOWER EXTERNAL STATIC PRESSURE					
Return Air Static Pressure			IN. W.C.		
Supply Air Static Pressure			IN. W.C.		
Total External Static Pressure (Ignoring +/- from the reading above, add total here)			IN. W.C.		
TEMPERATURES					
Return Air Temperature (Dry bulb / Wet bulb)			DB °F		WB °F
Cooling Supply Air Temperature (Dry bulb / Wet bulb)			DB °F		WB °F
Heating Supply Air Temperature			DB °F		
Temperature Rise			DB °F		
Delta T (Difference between Supply and Return Temperatures)			DB °F		
GAS PRESSURES					
Gas Inlet Pressure			IN. W.C.		
Gas Manifold Pressure (Low Fire)			IN. W.C.		
Gas Manifold Pressure (High Fire)			IN. W.C.		
Gas Type (NG) = Natural Gas / (LP) = Liquid Propane					
Residential Package - (Outdoor Section)					
ELECTRICAL					
Supply Voltage (Measure L1 and L2 Voltage)	L1 - L2				
Compressor Amps					
Condenser Fan Amps					
PRESSURES / TEMPERATURES					
Suction Circuit (Pressure / Suction Line Temperature)	PSIG		TEMP		°F
Liquid Circuit (Pressure / Liquid Temperature)	PSIG		TEMP		°F
Outdoor Air Temperature (Dry bulb / Wet bulb)			DB °F		WB °F
SUPERHEAT / SUBCOOLING	SH		SC		
Additional Checks					
Check wire routings for any rubbing					
Check product for proper draining					
Check for kinked pressure switch tubing.					
Check flue elbow for alignment and clamp tightness.					
Check screw tightness on blower wheel.					
Check factory wiring and wire connections.					
Check screw tightness on Outdoor Motor and Blade					
Check product for proper clearances as noted by installation instructions					
°F to °C formula: (°F - 32) divided by 1.8 = °C	**°C to °F formula: (°C multiplied by 1.8) + 32 = °F**				

THIS PAGE IS LEFT INTENTIONALLY BLANK.

THIS PAGE IS LEFT INTENTIONALLY BLANK.

THIS PAGE IS LEFT INTENTIONALLY BLANK.

CUSTOMER FEEDBACK
Daikin Comfort Technologies is very interested in all product comments.
Please fill out the feedback form on the following link:
https://daikincomfort.com/contact-us
You can also scan the QR code on the right to be directed to the feedback page.

Our continuing commitment to quality products may mean a change in specifications without notice.

© 2024-2025 Daikin Comfort Technologies Manufacturing, Inc.
19001 Kermier Rd. Waller, TX 77484
www.daikincomfort.com