DAIKIN

INSTALLATION INSTRUCTIONS

DP14U & DP16U M SERIES With R-410A

Single Package Gas-Electric Ultra-Low NOx Heating and Cooling Unit

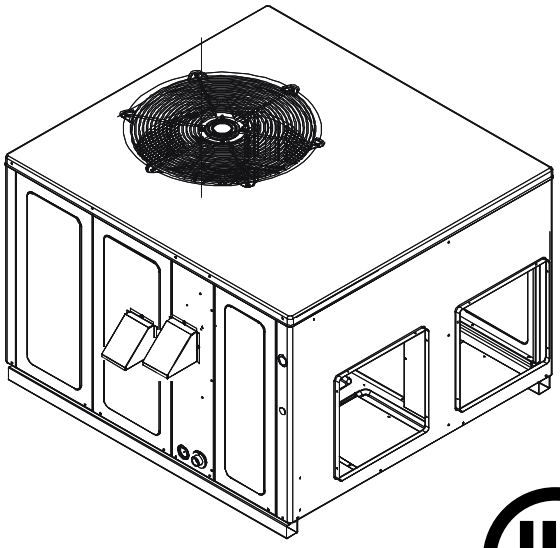

c UL us LISTED

Affix this manual and Users Information Manual adjacent to the unit.

WARNING

ONLY PERSONNEL THAT HAVE BEEN TRAINED TO INSTALL, ADJUST, SERVICE OR REPAIR(HEREINAFTER, "SERVICE") THE EQUIPMENT SPECIFIED IN THIS MANUAL SHOULD SERVICE THE EQUIPMENT. THE MANUFACTURER WILL NOT BE RESPONSIBLE FOR ANY INJURY OR PROPERTY DAMAGE ARISING FROM IMPROPER SERVICE OR SERVICE PROCEDURES. IF YOU SERVICE THIS UNIT, YOU ASSUME RESPONSIBILITY FOR ANY INJURY OR PROPERTY DAMAGE WHICH MAY RESULT. IN ADDITION, IN JURISDICTIONS THAT REQUIRE ONE OR MORE LICENSES TO SERVICE THE EQUIPMENT SPECIFIED IN THIS MANUAL, ONLY LICENSED PERSONNEL SHOULD SERVICE THE EQUIPMENT. IMPROPER INSTALLATION, ADJUSTMENT, SERVICING OR REPAIR OF THE EQUIPMENT SPECIFIED IN THIS MANUAL, OR ATTEMPTING TO INSTALL, ADJUST, SERVICE OR REPAIR THE EQUIPMENT SPECIFIED IN THIS MANUAL WITHOUT PROPER TRAINING MAY RESULT IN PRODUCT DAMAGE, PROPERTY DAMAGE, PERSONAL INJURY OR DEATH.

WARNING

DO NOT BYPASS SAFETY DEVICES.

ATTENTION INSTALLING PERSONNEL:

Prior to installation, thoroughly familiarize yourself with this Installation Manual. Observe all safety warnings. During installation or repair, caution is to be observed.

It is your responsibility to install the product safely and to educate the customer on its safe use.

RECOGNIZE THIS SYMBOL AS A SAFETY PRECAUTION

These installation instructions cover the outdoor installation of self contained package air conditioners and heating units. See the Specification Sheets applicable to your model for information regarding accessories.

***NOTE:** Please contact your distributor or our website for the applicable specification Sheets referred to in this manual.

This forced air central unit design complies with requirements embodied in the American Standard / National Standard of Canada show below.

ANSI Z21.47•CSA-2.3 Central Furnaces.

Our continuing commitment to quality products may mean a change in specifications without notice.

©2020-2021, 2023 ***DAIKIN COMFORT TECHNOLOGIES MANUFACTURING, L.P.***

19001 Kermier Rd., Waller, TX 77484
www.daikincomfort.com

IOD-3021D
12/2023

TABLE OF CONTENTS

HIGH ALTITUDE KIT 3
- Replace ID Plug 3
- Adjusting Gas Manifold Pressure 3

REPLACEMENT PARTS 3
- Ordering Parts 3

SAFETY INSTRUCTIONS 3
- To The Installer 3
- Safety Considerations 3

GENERAL INFORMATION 5
- Transportation Damage 6

UNIT LOCATION 8
- All Installations: 8
- Ground Level Installations Only: 8
- Rooftop Installations Only: 8
- Roof Curb Installations Only: 8

RIGGING DETAILS 8

GAS PIPING 9
- Piping 9
- Gas Piping Checks 10

ELECTRICAL WIRING 10
- Thermostat Location 10
- 24 Volt Dehumidistat Wiring 11
- Unit Voltage 12

CIRCULATING AIR AND FILTERS 12
- Airflow Conversion 12
- Ductwork 12
- Filters 13

VENTING 13
- Installation - Flue Hood Exhaust 13
- Installation - Combustion Air Intake Hood 13

CONDENSATE DRAIN 13
- Condensate Drain Connection 13

NORMAL SEQUENCES OF OPERATION 13
- Heating 13
- Cooling 14
- Fan Only 14

STARTUP, ADJUSTMENTS, AND CHECKS 14
- Heating Startup 14
- Gas Manifold Pressure Measurement and Adjustment 16
- Gas BTU Input (Natural Gas Only) Check 16
- Temperature Rise Check 17
- External Static Pressure Check 17
- Blower Speed Adjustments 17
- EEM Motors 17
- ECM Motors 18
- Limit Check 18
- Unit Shutdown 18
- Cooling Startup 18
- Compressor Protection Devices 19
- Refrigerant Charge Check 19

SUPERHEAT 19
- Checking Superheat 19
- Checking Subcooling 19
- Cooling Refrigerant Charging (Model with TXV) 20
- Superheat Adjustment 20
- Cooling Operation 20

TROUBLESHOOTING 20
- Ignition Control Error Codes 20
- Fault Recall 20
- Resetting from Lockout 20
- Pressure Sensor 21
- Primary Limit 21
- Flame Detected with Gas Valve Closed 21
- Low Flame Signal 21
- Burner Temperature Switch 21
- ID Plug 21
- Abnormal Operation - Cooling Short Cycle Compressor Delay 21
- High Pressure Switch/Loss of Charge Switch 22

MAINTENANCE 22
- Filter Replacement or Cleaning 22
- Cabinet Finish Maintenance 22
- Clean Outside Coil (Qualified Servicer Only) 22
- Condenser, Evaporator, and Induced Draft Motors 22
- Flame Sensor (Qualified Servicer Only) 22
- Flue Passages (Qualified Servicer Only) 22
- Cleaning Flue Passages (Qualified Servicer Only) 22
- Burners 23

ACCESSORIES AND FUNCTIONAL PARTS 23
- Sheet Metal Accessories 23
- Functional Parts 23
- General Information 23

APPENDIX 24
- Diagnostic Chart 25
- Unit Dimensions 26
- Wiring diagram 24
- Minimum Clearances 31
- Recommended Filter Sizes 31
- Blower Performance Data 32
- CFM Output and DIP Switch Settings 35
- Homeowner's Routine Maintenance Recommendations 36
- Start-up Checklist 37

HIGH ALTITUDE KIT

Manifold pressure adjustments and ID plug change are required for all installations above 4500 ft. The conversion from “standard altitude” (as shipped from the factory) to “high altitude” requires:

- Replacing ID plug
- Adjusting manifold pressure

Before proceeding, shut OFF gas supply at manual shut-off and turn off power to the unit.

Gas Input (BTU / HR)	0 - 4,500 Feet	4,500 Feet & Above
40,000	No Change	HAUR40
60,000	No Change	HAUR60
80,000	No Change	HAUR80

Replacing ID Plug

To replace ID plug:

1. Turn OFF power to unit.

WARNING

HIGH VOLTAGE
Disconnect all power before servicing or installing this unit. Multiple power sources may be present. Failure to do so may cause property damage, personal injury or death.

2. Locate the PCB in the unit’s control section. Locate the “ID Plug” on terminal labeled J9 on the PCB.
3. Remove the standard altitude ID plug by detaching it from the PCB.
4. Install high altitude ID plug supplied in the high-altitude kit. Verify that the ID plug is completely seated and attached with the PCB or else the unit might not function as intended.

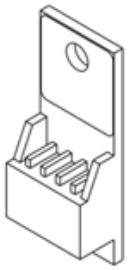

ID Plug

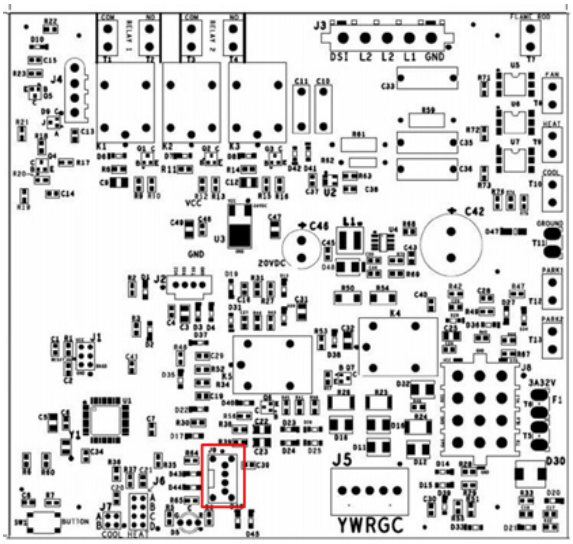

PCB Terminal J9

Adjusting Gas Manifold Pressure

Use the below manifold pressure settings:

Gas Input (BTU/HR)	Manifold Pressure up till 4,500 Ft.	Manifold Pressure at 5,000 Ft.	Manifold Pressure at 7,500 Ft.
40,000	3.0” w.c.	2.7” w.c.	2.2” w.c
60,000	3.0” w.c	2.7” w.c.	2.2” w.c.
80,000	3.0” w.c.	2.7” w.c.	2.2” w.c.

REPLACEMENT PARTS

Ordering Parts

When reporting shortages or damages, or ordering repair parts, give the complete unit model and serial numbers as stamped on the unit’s nameplate.

Replacement parts for this appliance are available through your contractor or local distributor. For the location of you nearest distributor, see website www.daikinac.com or contact:

EQUIPMENT SUPPORT
DAIKIN NORTH AMERICA LLC
19001 KERMIER ROAD
WALLER, TEXAS 77484
855-770-5678

SAFETY INSTRUCTIONS

To The Installer

Before installing this unit, please read this manual to familiarize yourself on the specific items which must be adhered to, including maximum external static pressure to unit, air temperature rise, minimum or maximum CFM and motor speed connections.

Keep this literature in a safe place for future reference.

Safety Considerations

IMPORTANT NOTE: This unit is designed to meet the NOX requirement of 14Ng / J maximum as required by the South Coast Air Quality Management District and the San Joaquin Valley Air Pollution Control District, both in the State of California, and is intended for installation in those districts only.

This unit has a Control System that compensates for certain installation and environmental conditions. This unit must:

- Be properly installed, operated, and maintained per the instructions.
- Be serviced only by properly trained Service Technicians.

This unit is not approved for use with gases other than Natural Gas.

Units that are not installed, maintained, or operated properly may result in "noisy" operation during the Heating Cycle. If this unit is making unusual or objectionable noises during the Heating Cycle, turn the heat off at the thermostat and contact a qualified Service organization right away.

Adhere to the following warnings and cautions when installing, adjusting, altering, servicing, or operating the furnace. To ensure proper installation and operation, thoroughly read this manual for specifics pertaining to the installation and application of this product.

This furnace is manufactured for use with natural gas only. Never test for gas leaks with an open flame. Use commercially available soap solution made specifically for the detection of leaks to check all connections, as specified in **GAS PIPING** section of this manual.

Always install a furnace to operate within the furnace's intended temperature-rise range with a duct system which has external static pressure within the allowable range, as specified on the rating plate.

WARNING

Do not connect to or use any device that is not design certified by the manufacturer for use with this unit. Serious property damage, personal injury, reduced unit performance and/or hazardous conditions may result from the use of such non-approved devices.

WARNING

To avoid property damage, personal injury or death, do not use this unit if any part has been under water. Immediately call a qualified service technician to inspect the furnace and to replace any part of the control system and any gas control having been under water.

WARNING

If the information in these instructions is not followed exactly, a fire or explosion may result causing property damage, personal injury or loss of life.

- do not store or use gasoline or other flammable vapors and liquids in the vicinity of this or any other appliance.
- WHAT TO DO IF YOU SMELL GAS:
  - Do not try to light any appliance.
  - Do not touch any electrical switch; do not use any phone in your building.
  - Immediately call your gas supplier from a neighbor's phone. Follow the gas supplier's instructions. If you cannot reach your gas supplier, call the fire department.
- Installation and service must be performed by a qualified installer, service agency or the gas supplier.

WARNING

Should overheating occur or the gas supply fail to shut off, turn off the manual gas shutoff valve external to the furnace before turning off the electrical supply.

WARNING

Heating unit should not be utilized without reasonable, routine, inspection, maintenance and supervision. If the building in which any such device is located will be vacant, care should be taken that such device is routinely inspected, maintained and monitored. In the event that the building maybe exposed to freezing temperatures and will be vacant, all water-bearing pipes should be drained, the building should be properly winterized, and the water source closed. In the event that the building maybe exposed to freezing temperatures and will be vacant, any hydronic coil units should be drained as well and, in such case, alternative heat sources should be utilized.

WARNING

FIRE OR EXPLOSION HAZARD

Failure to follow the safety warnings exactly could result in serious injury, death or property damage.
Never test for gas leaks with an open flame.
Use a commercially available soap solution made specifically for the detection of leaks to check all connections. A fire or explosion may result causing property damage, personal injury or loss of life.

AVERTISSEMENT

RISQUE D'INCENDIE OU D'EXPLOSION

Si les consignes de sécurité ne sont pas suivies à la lettre, cela peut entraîner la mort, de graves blessures ou des dommages matériels.
Ne jamais vérifier la présence de fuites de gaz au moyen d'une flamme nue. Vérifier tous les raccords en utilisant une solution savonneuse commerciale conçue spécialement pour la détection de fuites. Un incendie ou une explosion risque de se produire, ce qui peut entraîner la mort, des blessures ou des dommages matériels.

DANGER
PELIGRO

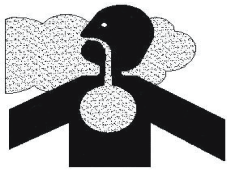

CARBON MONOXIDE POISONING HAZARD

Special Warning for Installation of Furnace or Air Handling Units in Enclosed Areas such as Garages, Utility Rooms or Parking Areas

Carbon monoxide producing devices (such as an automobile, space heater, gas water heater, etc.) should not be operated in enclosed areas such as unventilated garages, utility rooms or parking areas because of the danger of carbon monoxide (CO) poisoning resulting from the exhaust emissions. If a furnace or air handler is installed in an enclosed area such as a garage, utility room or parking area and a carbon monoxide producing device is operated therein, there must be adequate, direct outside ventilation.

This ventilation is necessary to avoid the danger of CO poisoning which can occur if a carbon monoxide producing device continues to operate in the enclosed area. Carbon monoxide emissions can be (re)circulated throughout the structure if the furnace or air handler is operating in any mode.

CO can cause serious illness including permanent brain damage or death. B10259-216

RIESGO DE INTOXICACIÓN PORMONÓXIDO DE CARBONO

Advertencia especial para la instalación de calentadores ómanejadoras de aire en áreas cerradas como estacionamientos ó cuartos de servicio.

Los equipos ó aparatos que producen monóxido de carbono (tal como automóvil, calentador de gas, calentador de agua por medio de gas, etc) no deben ser operados en áreas cerradas debido al riesgo de envenenamiento por monóxido de carbono (CO) que resulta de las emisiones de gases de combustión. Si el equipo ó aparato se opera en dichas áreas, debe existir una adecuada ventilación directa al exterior.

Esta ventilación es necesaria para evitar el peligro de envenenamiento por CO, que puede ocurrir si un dispositivo que producemonóxido de carbono sigue operando en el lugar cerrado.

Las emisiones de monóxido de carbono pueden circular a través del aparato cuando se opera en cualquier modo.

El monóxido de carbono puede causar enfermedades severas como daño cerebral permanente ó muerte. B10259-216

RISQUE D'EMPOISONNEMENT AUMONOXYDE DE CARBONE

Avertissement special au sujet de l'installation d'appareils de chauffage ou de traitement d'air dans des endroits clos, tets les garages, les locaux d'entretien et les stationnements.

Evitez de mettre en marche les appareils produisant du monoxyde de carbone (tels que les automobile, les appareils de chauffage autonome,etc.) dans des endroits non ventilés tels que les d'empoisonnement au monoxyde de carbone. Si vous devez faire fonctionner ces appareils dans un endroit clos, assures-vous qu'il y ait une ventilation directe provenant de l'exterier.

Cette ventilation est nécessaire pour éviter le danger d'intoxication au CO pouvant survenir si un appareil produisant du monoxyde de carbone continue de fonctionner au sein de la zone confinée.

Les émissions de monoxyde de carbone peuvent etre recircules dans les endroits clos, si l'appareil de chauffage ou de traitement d'air sont en marche.

Le monoxyde de carbone peut causer des maladies graves telles que des dommages permanents au cerveau et meme la mort. B10259-216

WARNING

THIS UNIT MUST NOT BE USED AS A "CONSTRUCTION HEATER" DURING THE FINISHING PHASES OF CONSTRUCTION ON A NEW STRUCTURE. THIS TYPE OF USE MAY RESULT IN PREMATURE FAILURE OF THE UNIT DUE TO EXTREMELY LOW RETURN AIR TEMPERATURE AND EXPOSURE TO CORROSIVE OR VERY DIRTY ATMOSPHERES.

WARNING

HIGH VOLTAGE
DISCONNECT ALL POWER BEFORE SERVICING OR INSTALLING THIS UNIT. MULTIPLE POWER SOURCES MAY BE PRESENT. FAILURE TO DO SO MAY CAUSE PROPERTY DAMAGE, PERSONAL INJURY OR DEATH.

WARNING

TO PREVENT THE RISK OF PROPERTY DAMAGE, PERSONAL INJURY, OR DEATH, DO NOT STORE COMBUSTIBLE MATERIALS OR USE GASOLINE OR FLAMMABLE LIQUIDS OR VAPORS IN THE VICINITY OF THIS APPLIANCE.

GENERAL INFORMATION

WARNING

TO PREVENT PROPERTY DAMAGE, PERSONAL INJURY OR DEATH, DUE TO FIRE, EXPLOSIONS, SMOKE, SOOT, CONDENSATION, ELECTRIC SHOCK OR CARBON MONOXIDE, THIS UNIT MUST BE PROPERLY INSTALLED REPAIRED, OPERATED, AND MAINTAINED.

This unit is approved for outdoor installation ONLY. Rated performance is achieved after 20 hours of operation. Rated performance is delivered at the specified airflow. See outdoor unit specification sheet for split system models or product specification sheet for packaged and light commercial models. Specification sheets can be found at www.daikincomfort.com for Daikin® brand products. Within the website, please select the residential or commercial products menu and then select the submenu for the type of product to be installed, such as air conditioners or heat pumps, to access a list of product pages that each contain links to that model's specification sheet.

To assure that your unit operates safely and efficiently, it must be installed, operated, and maintained in accordance with these installation and operating instructions, all local building codes and ordinances, or in their absence, with the latest edition of the National Fuel Gas Code NFPA 54/ANSI Z223.1 and National Standard of Canada CAN/CSA B149 Installation Codes.

The heating and cooling capacities of the unit should be greater than or equal to the design heating and cooling loads of the area to be conditioned. The loads should be calculated by an approved method or in accordance with A.S.H.R.A.E. Guide or Manual J - Load Calculations published by the Air Conditioning Contractors of America.

Obtain from:
American National Standards Institute
25 West 43rd Street, 4th Floor
New York, NY 10036

Transportation Damage

Check the carton upon arrival for external damage. If damage is found, a request for inspection by carrier agent should be made in writing immediately.

Carefully inspect the unit for damage including damage to the cabinetry. Any bolts or screws which may have loosened in transit must be re-tightened. In the event of damage, the receiver should:

1. Make notation on delivery receipt of any visible damage to shipment or container.
2. Notify carrier promptly and request an inspection.
3. In case of concealed damage, carrier should be notified as soon as possible - preferably within 5 days.
4. File the claim with the following supporting documents:
   a. Original Bill of Lading, certified copy, or indemnity bond.
   b. Original paid freight bill or indemnity in lieu thereof.
   c. Original invoice or certified copy thereof, showing trade and other discounts or reductions.
   d. Copy of the inspection report issued by carrier representative at the time damage is reported to the carrier. The carrier is responsible for making prompt inspection of damage and for a thorough investigation of each claim. The distributor or manufacturer will not accept claims from dealers for transportation damage.

NOTE: When inspecting the unit for transportation damage, remove all packaging materials. Recycle or dispose of the packaging material according to local codes.

WARNING

CARBON MONOXIDE POISONING HAZARD

Failure to follow the steps outlined below for each appliance connected to the venting system being placed into operation could result in carbon monoxide poisoning or death.

The following steps shall be followed with each appliance connected to the venting system placed in operation, while any other appliances connected to the venting system are not in operation:

1. **Seal any unused openings in the venting system.**
2. **Inspect the venting system for proper size and horizontal pitch, as required by the National Fuel Gas Code, ANSI Z223.1 or the Natural Gas and Propane Installation Code, CSA B149.1-15 and these instructions. Determine that there is no blockage or restriction, leakage, corrosion and other deficiencies which could cause an unsafe condition.**
3. **As far as practical, close all building doors and windows and all doors between the space in which the appliance(s) connected to the venting system are located and other spaces of the building.**
4. **Close fireplace dampers.**
5. **Turn on clothes dryers and any appliance not connected to the venting system. Turn on any exhaust fans, such as range hoods and bathroom exhausts, so they shall operate at maximum speed.**
   Do not operate a summer exhaust fan.
6. **Follow the lighting instructions. Place the appliance being inspected in operation. Adjust thermostat so appliance shall operate continuously.**
7. **Test for spillage from draft hood appliances at the draft hood relief opening after 5 minutes of main burner operation. Use the flame of a match or candle.**
8. **If improper venting is observed during any of the above tests, the venting system must be corrected in accordance with the National Fuel Gas Code ANSI Z223.1/NFPA 54 and/or National Gas and Propane Installation Code CSA B149.1-15.**
9. **After it has been determined that each appliance connected to the venting system properly vents when tested as outlined above, return doors, windows, exhaust fans, fireplace dampers and any other gas burning appliance to their previous conditions of use.**

AVERTISSEMENT

RISQUE D'INTOXICATION AU MONOXYDE DE CARBONE
Si les étapes décrites ci-dessous ne sont pas suivies pour chacun des appareils raccordés au système de ventilation au moment de sa mise en marche, cela peut entraîner une intoxication au monoxyde de carbone ou la mort.

Les étapes suivantes doivent être suivies pour chacun des appareils raccordés au système de ventilation au moment de sa mise en marche, alors que tous les autres appareils raccordés au système de ventilation ne sont pas en marche :

1. **Sceller toutes les ouvertures inutilisées du système de ventilation.**
2. **Inspecter le système de ventilation afin de vérifier si la taille et l'inclinaison par rapport à l'horizontale sont conformes aux exigences du National Fuel Gas Code, ANSI Z223.1/NFPA 54 ou du Code d'installation du gaz naturel et du propane, CSA B149.1 et à ces instructions. Vérifier qu'il n'y a pas d'obstruction ou de restriction, de fuite, de corrosion et d'autres problèmes qui pourraient entraîner une situation dangereuse.**
3. **Si possible, fermer toutes les portes et fenêtres du bâtiment ainsi que toutes les portes séparant l'endroit où se trouvent les appareils raccordés au système de ventilation et les autres zones du bâtiment.**
4. **Fermer le registre des foyers.**
5. **Mettre les sécheuses en marche ainsi que tous les autres appareils qui ne sont pas raccordés au système de ventilation. Mettre en marche tous les ventilateurs de tirage, comme celui des hottes de cuisine et des salles de bains, et les régler à la puissance maximale.**
   Ne pas mettre en marche les ventilateurs d'été.
6. **Suivre les instructions d'allumage. Mettre en marche l'appareil soumis à l'inspection. Régler le thermostat de manière à ce que l'appareil fonctionne en continu.**
7. **Vérifier la présence de fuite au niveau de l'ouverture du coupe-tirage des appareils qui en sont dotés après 5 minutes de fonctionnement du brûleur principal. Utiliser la flamme d'une allumette ou d'une bougie.**
8. **Si un problème de ventilation est observé pendant l'un des essais décrits ci-dessus, des correctifs doivent être apportés au système de ventilation conformément au National Fuel Gas Code, ANSI Z223.1/NFPA 54 et (ou) au Code d'installation du gaz naturel et du propane, CSA B149.1.**
9. **Une fois qu'il a été déterminé que chaque appareil raccordé au système de ventilation fonctionne correctement au moyen des essais décrits ci-dessus, les portes, les fenêtres, les ventilateurs, les registres de foyer et tous les autres appareils de combustion alimentés au gaz doivent être remis dans leur état initial.**

UNIT LOCATION

WARNING

To prevent possible equipment damage, property damage, personal injury or death, the following bullet points must be observed when installing the unit.

IMPORTANT NOTE: Remove wood shipping rails prior to installation of the unit.

All Installations:

- For proper flame pattern within the heat exchanger and proper condensate drainage, the unit must be mounted level.
- The flue outlet hood must be at least 12 inches from any opening through which flue gases could enter a building,and at least three feet above any forced air inlet located within ten feet. The economizer/ manual fresh air intake/motorized fresh air intake and combustion air inlet mounted on the unit are not affected by this restriction.
- To avoid possible corrosion of the heat exchanger, do not locate the unit in an area where the outdoor air (i.e. combustion air for the unit) will be frequently contaminated by compounds containing chlorine or fluorine. Common sources of such compounds include swimming pool chemicals and chlorine bleaches, paint stripper, adhesives, paints, varnishes, sealers, waxes(which are not yet dried) and solvents used during construction and remodeling. Various commercial and industrial processes may also be sources of chlorine / fluorine compounds.
- To avoid possible illness or death of the building occupants, do NOT locate outside air intake device (economizer, manual fresh air intake, motorized fresh air intake) too close to an exhaust outlet, gas vent termination, or plumbing vent outlet. For specific distances required, consult local codes.
- Allow minimum clearances from the enclosure for fire protection, proper operation, and service access (see appendix). These clearances must be permanently maintained.
- The combustion air inlet and flue outlet hoods on the unit must never be obstructed. If used, do not allow the economizer/manual fresh air damper/ motorized fresh air damper to become blocked by snow or debris. In some climates or locations, it may be necessary to elevate the unit to avoid these problems.
- Damper must be in open position when appliance main burner(s) is operating.
  Le registre doit être ouvert lorsque tout brûleur principal de l'appareil est en état de fonctionnement.
- When the unit is heating, the temperature of the return air entering the unit must be between 50°F and 100°F.
- Units manufactured on or after May 1, 2017 are not permitted to be used in Canada for heating of buildings or structures under construction.

Ground Level Installations Only:

When the unit is installed on the ground adjacent to the building, a level concrete (or equal) base is recommended. Prepare a base that is 3" larger than the package unit footprint and a minimum of 3" thick.

- The base should also be located where no runoff of water from higher ground can collect in the unit.
- The top of the unit should be completely unobstructed. If units are to be located under an overhang, there should be a minimum of 48" clearance and provisions made to deflect the warm discharge air out from the overhang.

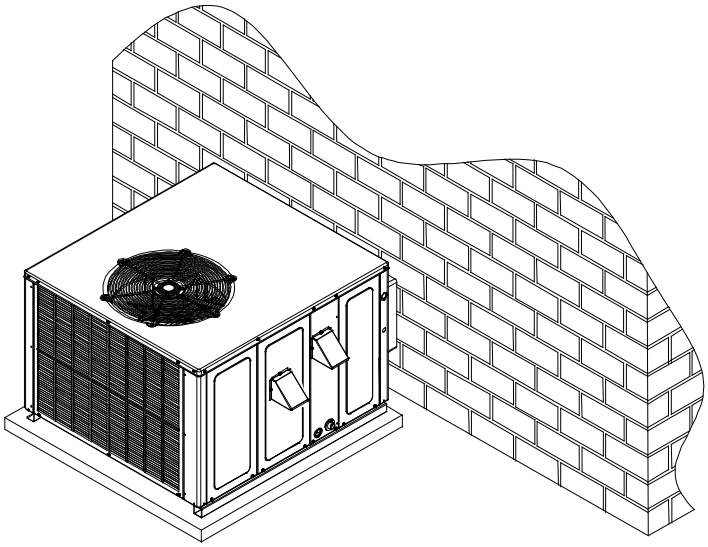

Outside Slab Installation

Rooftop Installations Only:

NOTE: To ensure proper condensate drainage, unit must be installed in a level position.

- To avoid possible property damage or personal injury, the roof must have sufficient structural strength to carry the weight of the unit(s) and snow or water loads as required by local codes. Consult a structural engineer to determine the weight capabilities of the roof.

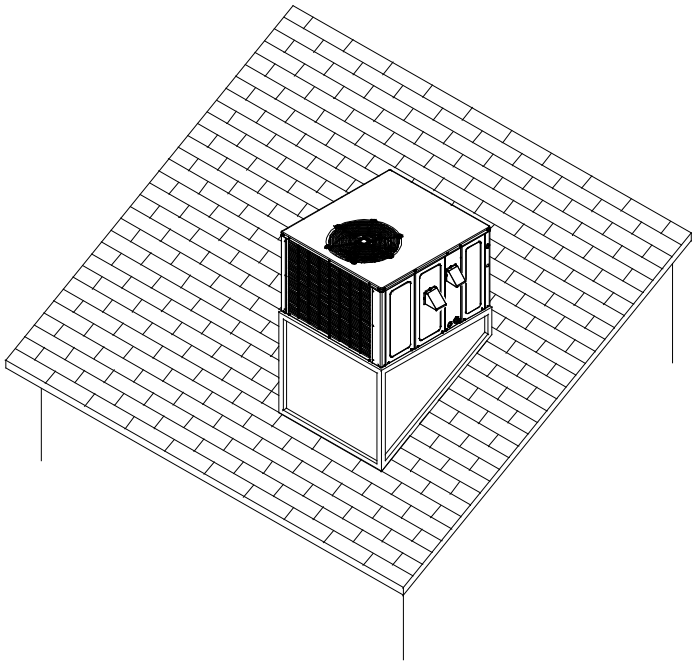

Rooftop Installation

- The unit may be installed directly on wood floors or on Class A, Class B, or Class C roof covering material.
- To avoid possible personal injury, a safe, flat surface for service personnel should be provided.

Roof Curb Installations Only:

- Sufficient structural support must be determined prior to locating and mounting the curb and package unit.
- Ductwork must be constructed using industry guidelines. The duct work must be placed into the roof curb before mounting the package unit.
- Curb insulation, cant strips, flashing and general roofing material are furnished by the contractor.

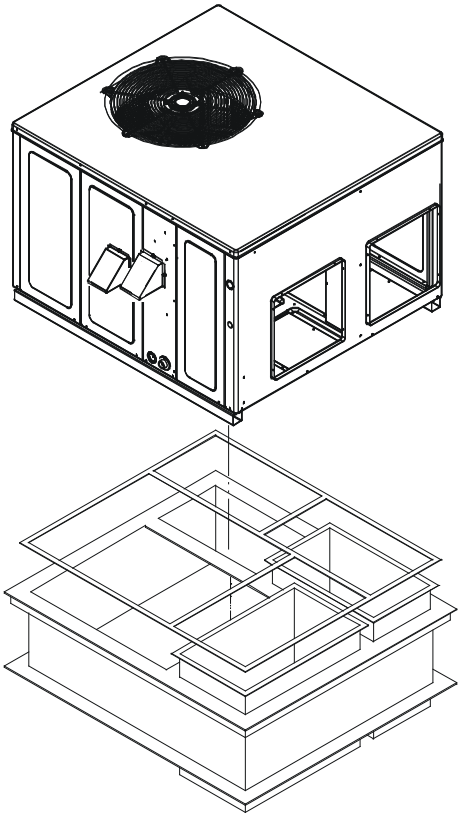

Roof Curb Installation

RIGGING DETAILS

WARNING

To prevent property damage, the unit should remain in an upright position during all rigging and moving operations. To facilitate lifting and moving when a crane is used, place the unit in an adequate cable sling.

IMPORTANT NOTE: If using bottom discharge with roof curb, ductwork should be attached to the curb prior to installing the unit. Ductwork dimensions are shown in roof curb installation instructions.

Refer to the Roof Curb Installation Instructions for proper curb installation. Curbing must be installed in compliance with the National Roofing Contractors Association Manual. Lower unit carefully onto roof mounting curb. While rigging unit, center of gravity will cause condenser end to be lower than supply air end.

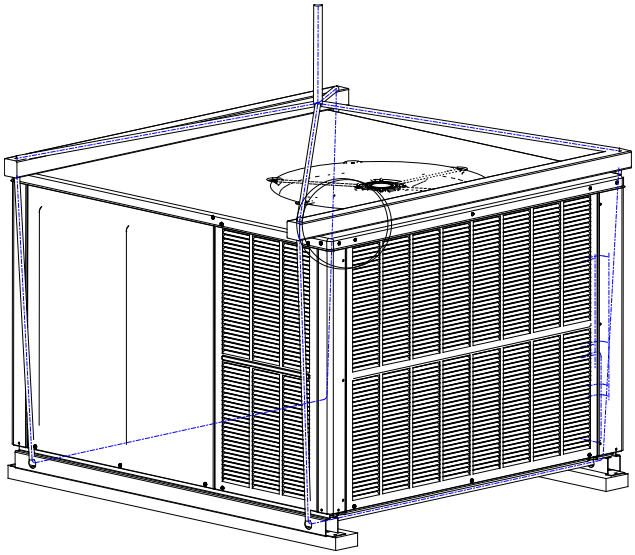

RIGGING

GAS PIPING

IMPORTANT NOTE: THIS UNIT IS FACTORY SET TO OPERATE ON NATURAL GAS AT THE ALTITUDES SHOWN ON THE RATING PLATE.

The rating plate is stamped with the model number, type of gas and gas input rating. Make sure the unit is equipped to operate on the type of gas available.

INLET GAS PRESSURE	
Natural	Min. 5.0" W.C., Max. 10.0" W.C.

Inlet gas pressure must be within the minimum and the maximum value shown in the inlet gas pressure table. The minimum supply pressure should not vary from that shown in the table because this could prevent the unit from having dependable ignition. In addition, gas input to the burners must not exceed the rated input shown on the rating plate. Overfiring of the unit could result in premature heat exchanger failure.

CAUTION

TO PREVENT UNRELIABLE OPERATION OR EQUIPMENT DAMAGE, THE INLET GAS SUPPLY PRESSURE MUST BE AS SPECIFIED ON THE UNIT RATING PLATE WITH ALL OTHER HOUSEHOLD GAS FIRED APPLIANCES OPERATING.

PIPING

WARNING

TO AVOID POSSIBLE UNSATISFACTORY OPERATION OR EQUIPMENT DAMAGE DUE TO UNDERFIRING OF EQUIPMENT, USE THE PROPER SIZE OF NATURAL GAS PIPING NEEDED WHEN RUNNING PIPE FROM THE METER TO THE FURNACE.

The rating plate is stamped with the model number, type of gas and gas input rating. Make sure the unit is equipped to operate on the type of gas available. The gas line installation must comply with local codes, or in the absence of local codes, with the latest edition of the National Fuel Gas Code NFPA 54/ANSI Z223.1.

Natural Gas Connection

Natural Gas Capacity of Pipe in Cubic Feet of Gas Per Hour (CFH)					
Length of Pipe in Feet	Nominal Black Pipe Size (inches)				
	1/2	3/4	1	1 1/4	1 1/2
10	132	278	520	1050	1600
20	92	190	350	730	1100
30	73	152	285	590	980
40	63	130	245	500	760
50	56	115	215	440	670
60	50	105	195	400	610
70	46	96	180	370	560
80	43	90	170	350	530
90	40	84	160	320	490
100	38	79	150	305	460

Pressure= .50 PSIG or less and Pressure Drop of 0.3" W.C.
(Based on 0.60 Specific Gravity Gas)

$$\text{CFH} = \frac{\text{BTUH Furnace Input}}{\text{Heating Value of Gas (BTU/Cubic Foot}}$$

1. Refer to the Proper Piping Practice drawing for the general layout at the unit. The following rules apply:
2. Use black iron pipe and fittings for the supply piping. The use of a flex connector and/or copper piping is permitted as long as it is in agreement with local codes.
3. Use pipe joint compound on male threads only. Pipe joint compound must be resistant to the action of the fuel used.
4. Use ground joint unions.
5. Install a drip leg to trap dirt and moisture before it can enter the gas valve. The drip leg must be a minimum of three inches long.
6. Use two pipe wrenches when making connection to the gas valve to keep it from turning.
7. Install a manual shut-off valve in a convenient location (within six feet of unit) between the meter and the unit.
8. Tighten all joints securely.
9. The unit must be connected to the building piping by one of the following methods:
   - Rigid metallic pipe and fittings
   - Semirigid metallic tubing and metallic fittings (Aluminum alloy tubing must not be used in exterior locations)
   - Listed gas appliance connectors used in accordance with the terms of their listing that are completely in the same room as the equipment
   - In the prior two methods above the connector or tubing must be protected from physical and thermal damage. Aluminum alloy tubing and connectors must be coated to protect against external corrosion when in contact with masonry, plaster or insulation or are subject to repeated wettings by liquids (water - not rain water, detergents or sewage).

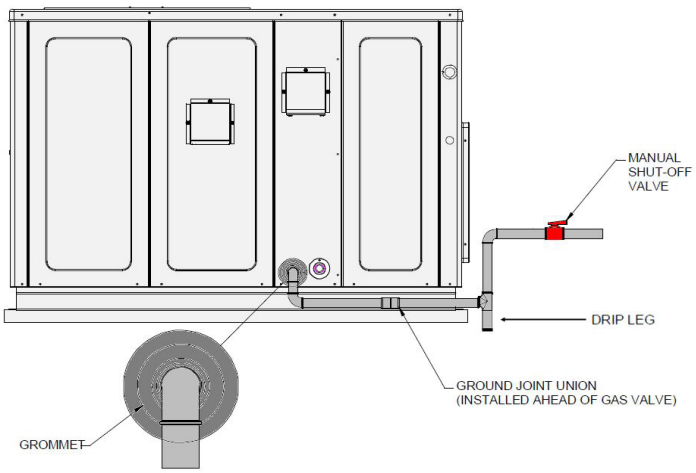

Proper Piping Practice

NOTE: The unit gas supply entrance is factory sealed with plugs. Keep plugs in place until gas supply is ready to be installed. Once ready, replace the plugs with the supplied grommets and install gas supply line.

Gas Piping Checks

WARNING

To prevent property damage or personal injury due to fire, the following instructions must be performed regarding gas connections and pressure testing:

- **The unit and its gas connections must be leak tested before fire, never use a match or open flame to test for leaks. Never exceed specified pressures for testing. Higher pressure may damage gas valve and cause overfiring which may result in premature heat exchanger failure.**
- **This unit and its shut-off valve must be disconnected from the gas supply during any pressure testing of that system at pressures in excess of ½ PSIG (3.48 kPA).**
- **This unit must be isolated from the gas supply system by closing its manual shut-off valve during any pressure testing of the gas supply piping system at test pressures equal to or less than ½ PSIG (3.48 kPA).**

WARNING

To avoid property damage or personal injury, be sure there is no open flame in the vicinity during air bleeding.

There will be air in the gas supply line after testing for leaks on a new installation. Therefore, the air must be bled from the line by loosening the ground joint union until pure gas is expelled. Tighten union and wait for five minutes until all gas has been dissipated in the air. Be certain there is no open flame in the vicinity during air bleeding procedure. The unit is placed in operation by closing the main electrical disconnect switch for the unit.

ELECTRICAL WIRING

Thermostat Location

Mount the thermostat approximately five feet above the floor, in an area that has an inside, vibration-free wall and has good air circulation.

Movement of air must not be obstructed by furniture, door, draperies, etc. The thermostat must not be mounted where it will be affected by drafts, hot or cold water pipes or air ducts in walls, radiant heat from fireplace, lamps, the sun, television, etc. Consult the Instruction Sheet packaged with thermostat for mounting instructions.

NOTE: All units have one stage of heating and either one or two stages of mechanical cooling. If the unit has two stages of mechanical cooling, the thermostat must also be two stage. Refer to figures later in this section for wiring.

WARNING

To avoid personal injury, electrical shock or death, disconnect electrical power before servicing or changing any electrical wiring.

The units are designed for operation on 60 hertz current and at voltages as shown on the rating plate. All internal wiring in the unit is complete. It is necessary to bring in the power supply to the contactor as shown on the unit wiring diagram which is supplied with each unit. The low voltage wiring must be connected between the unit control panel and the room thermostat.

1 STAGE COOLING - 1 PHASE POWER

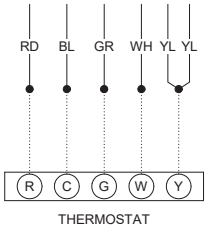

2 STAGE COOLING - 1 PHASE POWER

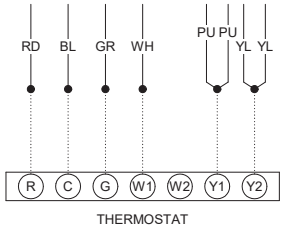

1 STAGE COOLING - 3 PHASE POWER NO ECONOMIZER

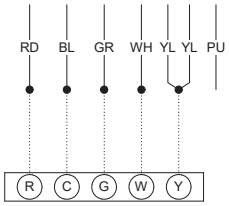

2 STAGE COOLING - 3 PHASE POWER

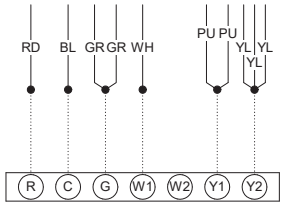

1 STAGE COOLING - 3 PHASE POWER WITH ECONOMIZER

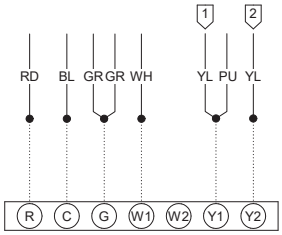

WIRING LEGEND

FACTORY WIRING

FIELD WIRING

WIRE NUT CONNECTION

1 WIRE CONNECTS TO PCBBL216 J5 PLM PIN 5

2 WIRE CONNECTS TO ECONOMIZER PLF PIN 2

24 Volt Dehumidistat Wiring (For DP16UM* Only)

The optional usage of a dehumidistat allows the unit's circulator blower to operate at a slightly lower speed (approximately 80% of desired cooling speed) during a combined thermostat call for cooling and dehumidistat call for dehumidification. This can be done through an independent dehumidistat. This lower blower speed enhances dehumidification of the conditioned air as it passes through the air conditioning coil. For proper function, a dehumidistat applied to this package unit must operate on 24 VAC and utilize a switch which opens on humidity rise. Refer to the unit wiring diagram for additional wiring details.

To install/connect a dehumidistat:

1. Turn OFF power to unit.

WARNING

HIGH VOLTAGE
Disconnect all power before servicing or installing this unit. Multiple power sources may be present. Failure to do so may cause property damage, personal injury or death.

2. To enable the dehumidify function, locate the ECM blower motor interface module in the unit's blower section. Locate the jumper labeled "HUM" on the interface module. Cut the jumper to enable dehumidification (see ECM Blower Motor Interface Module).
3. Connect "R" to the common side of the Dehumidistat (close on humidity rise).
4. Connect the N/O (normally open) side of the Dehumidistat to the HUM terminal on PCBEM103 ECM control board.
5. Turn ON power to unit.

Once the HUM jumper is cut at the ECM motor interface module, the dehumidify function is enabled during a combination call for cooling (T-Stat) and dehumidification (DEHUMStat).

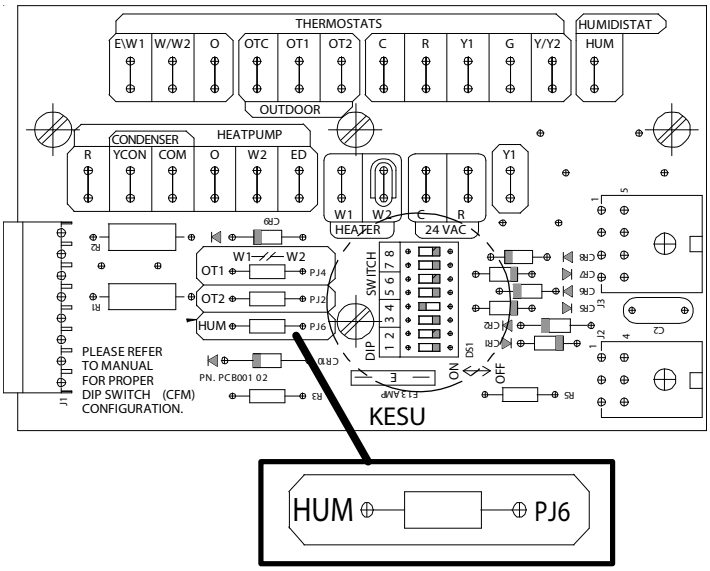

ECM Blower Motor Interface Module

Refer to the unit wiring diagram for electrical connections. When installed, the unit must be electrically grounded in accordance with local codes or in the absence of local codes, with the National Electrical Code, ANSI/NFPA No. 70, and/or the CSA C22.1 Electrical Code. Ensure low voltage connections are waterproof.

WARNING

To avoid the risk of electrical shock, wiring to the unit must be polarized and grounded.

CAUTION

To avoid property damage or personal injury due to fire, use only copper conductors.

For unit protection, use a fuse or hacr circuit breaker that is in excess of the circuit ampacity, but less than or equal to the maximum overcurrent protection device. DO NOT EXCEED THE MAXIMUM OVERCURRENT DEVICE SIZE SHOWN ON UNIT DATA PLATE.

All line voltage connections must be made through weatherproof fittings. All exterior power supply and ground wiring must be in approved weatherproof conduit. Low voltage wiring from the unit control panel to the thermostat requires coded cable. See below for ground level and rooftop wiring.

Unit Voltage

Rated Voltage	Minimum Supply Voltage	Maximum Supply Voltage
208/230V	197	253

The unit transformer is factory connected for 230V operation. If the unit is to operate on 208V, reconnect the transformer primary lead as shown on the unit wiring diagram. The induced draft blower on some models is equipped with a low speed 230V lead (blue) and a low speed 208V lead (black). If equipped, connect the induced draft blower low speed 208V lead (black) in place of the low speed 230V lead (blue). Place the unused 230V lead on the “PARK” terminal located on ignition control.

Single Phase Units. Connect two leads to terminals L1 & L2 in the electrical control section.

Three Phase Units. Connect three leads to terminals L1, L2 & L3 in the electrical control section, using wire sizes specified in “Wiring table”.

BRANCH CIRCUIT AMPACITY	15	20	25	30	35	40	45	50
SUPPLY WIRE LENGTH - FEET								
200	6	4	4	4	3	3	2	2
150	8	6	6	4	4	4	3	3
100	10	8	8	6	6	6	4	4
50	14	12	10	10	8	8	6	6

Wiring Table

CIRCULATING AIR AND FILTERS

Airflow Conversion

Units can easily be converted from horizontal to down-discharge airflow delivery. In down-discharge or high static installations, the installer should measure the total external static and review the blower performance charts before performing the installation. In some installations it will be necessary to change the blower speed to provide proper air flow.

Horizontal Air Flow

Single phase models are shipped without horizontal duct covers. If needed, these kits may be ordered through Daikin’s Service Parts department.

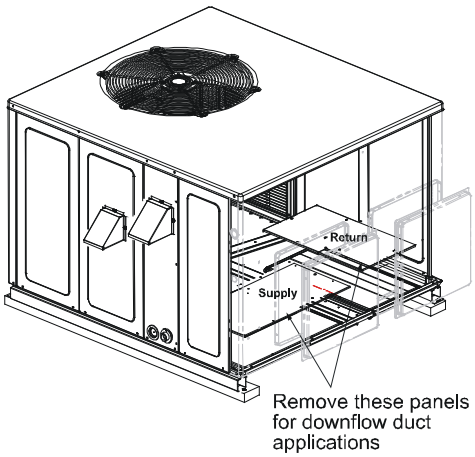

Duct Cover Installation

Down Discharge Applications

Cut insulation around bottom openings and remove panels from the bottom of the unit, saving the screws holding the panels in place.

NOTE: Single phase models require installation of horizontal duct kit #20464501NGK (medium chassis) and #20464502NGK (large chassis). See “Unit Dimensions”section for chassis sizes.

Ductwork

Duct systems and register sizes must be properly designed for the C.F.M. and external static pressure rating of the unit. Ductwork should be designed in accordance with the recommended methods of Air Conditioning Contractors of America Manual D (Residential) or Manual Q (Commercial). All ductwork exposed to the outdoors must include a weatherproof barrier and adequate insulation. A duct system should be installed in accordance with Standards of the National Board of Fire Underwriters for the Installation of Air Conditioning, Warm Air Heating and Ventilating Systems. Pamphlets No. 90A and 90B.

The supply duct from the unit through a wall may be installed without clearance. However, minimum unit clearances as shown in the appendix must be maintained. The supply duct should be provided with an access panel large enough to inspect the air chamber downstream of the heat exchanger. A cover should be tightly attached to prevent air leaks.

For duct flange dimensions on the unit refer to the Unit Dimension illustration in the appendix.

For down-discharge applications, the ductwork should be attached to the roof curb prior to installing the unit.

Ductwork dimensions are shown in the roof curb installation manual.

If desired, supply and return duct connections to the unit may be made with flexible connections to reduce possible unit operating sound transmission.

Filters

CAUTION

To prevent property damage due to fire and loss of equipment efficiency or equipment damage due to dust and lint build-up on internal parts, never operate the unit without an air filter installed in the return air system.

Even though a return air filter is not supplied with this unit, there must be a means of filtering all return air. All units may be externally filtered.

Refer to the unit filter size chart in the appendix for filter size information.

Filters installed external to the unit should be sized in accordance with their manufacturer recommendations. A throwaway filter must be sized for a maximum face velocity of 300 feet per minute.

Filter Installation

IMPORTANT NOTE: When installing a filter, the air flow arrows on the filter must point toward the circulator blower.

VENTING

NOTE: Venting is self-contained. Do not modify or block.

Installation - Flue Hood Exhaust

1. Locate the flue hood assembly box in the unit.
2. Slide screen over flanges on the lower flue hood.
3. Slide screen and lower flue hood into hood.
4. Using the three screws provided, attach the hood (with the opening facing down) over the flue exhaust opening in the utility panel.

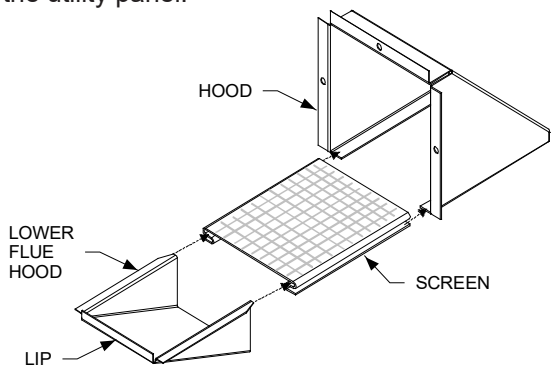

Installation - Combustion Air Intake Hood

1. Locate the second hood.
2. Using the three screws provided, attach the hood (with the opening facing down) to the heat exchanger access door.

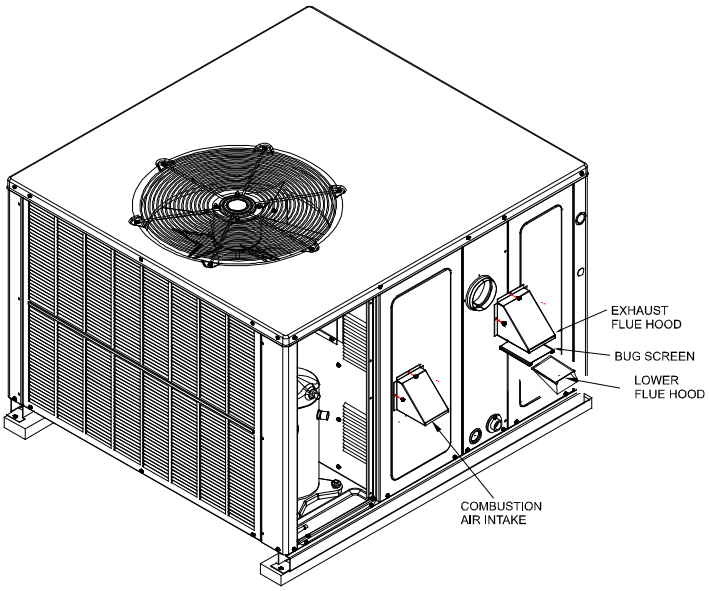

Condensate Drain

Condensate Drain Connection

A ¾" NPT drain connection is supplied for condensate piping. An external trap must be installed for proper condensate drainage.

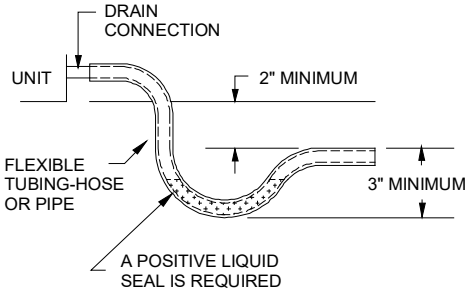

Drain Connection

NORMAL SEQUENCES OF OPERATION

Heating

This unit is equipped with an ignition control that automatically lights the main burner. DO NOT attempt to light the main burners by any other method.

1. R and W thermostat contacts close, initiating a call for heat.
2. Integrated control module performs safety circuit checks.
3. Inducer draft blower is energized for 30 second pre-purge period causing pressure sensor contacts to close.
4. At the end of pre-purge period, integrated control module transitions the induced draft blower to light-off setting.
5. Once the light-off pressure setting is verified by the integrated control module, the spark igniter and gas valve are energized for 4 seconds.

NOTE: The igniter produces a very intense electrical spark that ignites the gas.

6. Integrated control module monitors flame presence. Gas valve will remain open only if the flame is detected.
7. The 5-second HEAT FAN ON delay time begins after main burner lights.
8. The unit delivers heat to the conditioned space until the thermostat is satisfied; integrated control module monitors safety circuits continuously.
9. R and W thermostat contacts open, completing the call for heat; gas valve de-energizes.
10. Induced draft blower keeps operating for 30-second post purge.
11. Ignition control begins timing the HEAT FAN OFF delay. There is an adjustable HEAT FAN OFF delay of approximately 90/120/150/180 seconds (factory set at 150).

NOTE: This delay allows any additional heat in the heat exchanger to be transferred to the conditioned space. After the HEAT FAN OFF delay time has elapsed, the blower will de-energize.

Cooling

1. Thermostat calls for low or high stage cooling.
2. If the thermostat call is for low stage cooling, the compressor and outdoor fan are energized at low stage. If the thermostat call is for high stage cooling, the compressor and outdoor fan are energized at high stage.
3. The indoor blower will energize approximately 6 seconds later.
4. The unit delivers cooling to the conditioned space until the thermostat is satisfied.
5. The compressor and outdoor fan will be de-energized when the thermostat opens.
6. The indoor blower continues to run at low cool speed for approximately 60 seconds after the thermostat is satisfied. This allows additional cooling from the indoor coil to be transferred to the conditioned space. Then, the indoor blower is de-energized.

NOTE: A 180-second anti-short cycle is integral to the control and prevents recycling of the compressor.

Fan Only

1. Thermostat calls for FAN ONLY by energizing “G”.
2. Indoor blower is energized at fan only speed. DP16U models are equipped with ECM variable speed motor; the fan only blower speed is approximately 75% of the HIGH COOL speed for DP16U models.
3. The indoor blower is immediately de-energized once thermostat call for FAN is removed.

STARTUP, ADJUSTMENTS, AND CHECKS

Heating Startup

This unit is equipped with an electronic ignition device to automatically light the main burners. It also has a power vent blower to exhaust combustion products.
On new installations, or if a major component has been replaced, the operation of the unit must be checked. Check unit operation as outlined in the following instructions. If any sparking, odors, or unusual sounds are encountered, shut off electrical power and check for wiring errors, or obstructions in or near the blower motors. Duct covers must be removed before operating unit.

Burner Limit Control

The burner temperature switch is mounted on the burner box assembly to monitor the burner box temperature. It is normally closed (electrically), auto-reset sensor. An input to the control is provided by the normally closed blocked burner switch. An open blocked burner switch interrupts current to the gas valve which closes the valve. This switch guards against the burner flames not being properly drawn into the heat exchanger.

Secondary Limit Control

The secondary limit control is located on the top of the blower scroll assembly. This control opens when elevated temperatures are sensed. Elevated temperatures at the control are normally caused by blower failure. The reason for the opening should be determined and repaired prior to resetting.

If the power to the unit is interrupted during the heating cycle, it may cause the secondary limit to trip. Once the blower compartment temperature drops below the limit reset temperature, the limit will automatically reset.

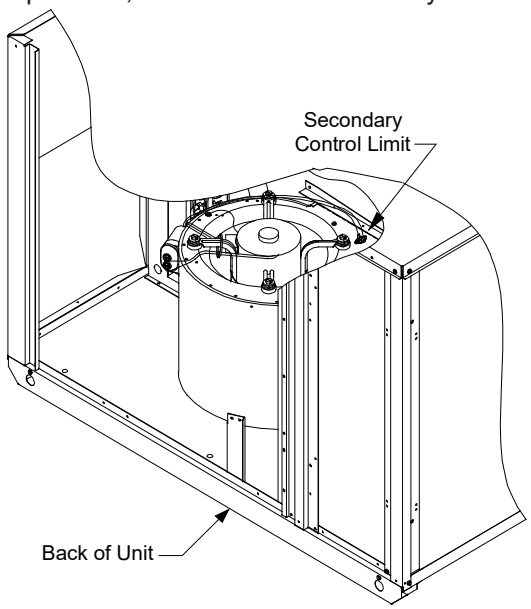

Secondary Limit Control

Pre-Operation Checks

1. Close the manual gas valve external to the unit.
2. Turn off the electrical power supply to the unit.
3. Set the room thermostat to its lowest possible setting.
4. Remove the heat exchanger door on the side of the unit by removing screws.
5. This unit is equipped with an ignition device which automatically lights the main burner. DO NOT try to light burner by any other method.
6. Move the gas control valve switch to the OFF position. Do not force.
7. Wait five minutes to clear out any gas.
8. Smell for gas, including near the ground. This is important because some types of gas are heavier than air. If you have waited five minutes and you do smell gas, immediately follow the warnings near the beginning of this manual. If having waited for five minutes and no gas smell is noted, move the gas control valve switch to the ON position.
9. Replace the heat exchanger door on the side of the unit.
10. Open the manual gas valve external to the unit.
11. Turn on the electrical power supply to the unit.
12. Set the thermostat to desired setting.

Gas Supply And Manifold Check

Gas supply pressure and manifold pressure with the burners operating must be as specified on the rating plate.

NOTE: Use adapter kit #0151K00000S to measure gas pressure on White-Rodgers 36J22Y gas valves.

Gas Supply Pressure Measurement

CAUTION

To prevent unreliable operation or equipment damage, the inlet gas supply pressure must be as specified on the unit rating plate with all other household gas fired appliances operating.

The line pressure supplied to the gas valve must be within the Inlet Gas Supply Pressure range specified. The supply pressure can be measured at the gas valve inlet pressure tap or at a hose fitting installed in the gas piping drip leg. The supply pressure must be measured with the unit OFF. To measure inlet pressure, use the following procedure.

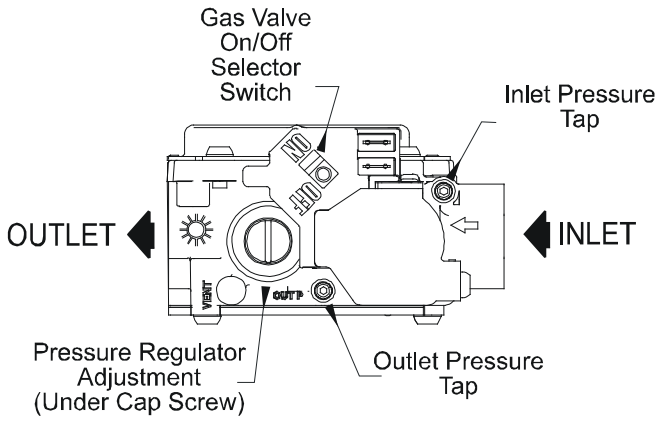

White-Rodgers Model 36J22Y-204

1. Turn OFF gas to furnace at the manual gas shutoff valve external to the furnace.
2. Turn OFF all electrical power to the system.
3. Inlet pressure tap connections:
   a. White-Rodgers Valve:
      Back inlet pressure test screw (inlet pressure tap out one turn (counterclockwise, not more than one turn).
3. Connect manometer (or appropriate pressure gauge) at either the gas valve inlet pressure tap or the gas piping drip leg. See White-Rodgers 36J22Y-204 gas valve for location of inlet pressure tap.
4. Turn ON the gas supply.
5. Turn On power and operate the furnace and all other gas consuming appliances on the same gas supply line.
6. Using a leak detection solution or soap suds, check for leaks at screw (White-Rodgers valve). Bubbles forming indicate a leak. SHUT OFF GAS AND REPAIR ALL LEAKS IMMEDIATELY!
7. Measure the gas supply pressure with burners firing. Adjust supply pressure using the *Inlet Gas Supply Pressure* table shown below. If supply pressure reading differs from the table, make necessary adjustments to pressure regulator, gas piping size, etc., and/or consult with local gas utility.

INLET GAS SUPPLY PRESSURE	
Natural Gas	Min. 5.0" W.C., Max. 10.0" W.C.

8. Turn OFF all electrical power and gas supply to the system.
9. Remove the manometer hose from the hose barb fitting or inlet pressure Tap.
10. Replace inlet pressure tap:
    a. White-Rodgers Valve:
       Turn inlet pressure test screw in to seal pressure port (clockwise, 7 in-lb minimum).
11. Retest for leaks. If bubbles form, shut down gas and repair leaks immediately.

12. If there are no leaks, turn ON electrical power and gas supply to the system.
13. Turn valve switch ON.

NOTE: If measuring gas pressure at the drip leg, a field-supplied hose barb fitting must be installed prior to making the hose connection. If using the inlet pressure tap on the White-Rodgers gas valve, then use the 36G/J Valve Pressure Check Kit, Goodman Part No. 0151K00000S.

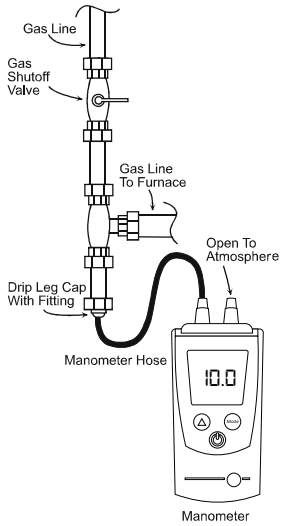

Measuring Inlet Gas Pressure (Alt. Method)

Gas Manifold Pressure Measurement and Adjustment

CAUTION

To prevent unreliable operation or equipment damage, the gas manifold pressure must be as specified on the unit rating plate. Only minor adjustments should be made by adjusting the gas valve pressure regulator.

Only small variations in gas pressure should be made by adjusting the gas valve pressure regulator. The manifold pressure must be measured with the burners operating. To measure and adjust the manifold pressure, use the following procedure.

1. Turn OFF gas to furnace at the manual gas shutoff valve external to the furnace.
2. Turn OFF all electrical power to the system.
3. Outlet pressure tap connections:
   a. White-Rodgers Valve:
      Back outlet pressure test screw (outlet pressure Tap) out one turn (counterclockwise, not more than one turn).
4. Connect manometer (or appropriate pressure gauge) at the gas valve outlet pressure tap. See White-Rodgers 36J22Y-204 gas valve for location of outlet pressure tap.
5. Turn ON the gas supply.
6. Turn ON power and close thermostat “R” and “W” contacts to provide a call for heat.
7. Using a leak detection solution or soap suds, check for leaks at outlet pressure tap screw (White-Rodgers Valve). Bubbles forming indicate a leak. SHUT OFF GAS AND REPAIR ALL LEAKS IMMEDIATELY!
8. Measure the gas manifold pressure with burners firing. Adjust manifold pressure using the following *Manifold Gas Pressure* table.

Manifold Gas Pressure	
Natural Gas	2.8" - 3.2" w.c.

The Manifold Gas Pressure must be within the range specified.

9. Remove regulator cover screw from the outlet pressure regulator and turn screw clockwise to increase pressure or counterclockwise to decrease pressure. Replace regulator cover screw.
10. Turn OFF all electrical power and gas supply to the system.
11. Remove the manometer hose from the hose barb fitting or outlet pressure Tap.
12. Replace outlet pressure tap:
    a. White-Rodgers Valve: Turn outlet pressure test screw in to seal pressure port (clockwise, 7 in-lb minimum).
13. Turn ON electrical power and gas supply to the system.
14. Close thermostat contacts to provide a call for heat.
15. Retest for leaks. If bubbles form, SHUT OFF GAS AND REPAIR ALL LEAKS IMMEDIATELY!

Gas BTU Input (Natural Gas Only) Check

To measure the gas input use a gas meter and proceed as follows:

1. Turn off gas supply to all other appliances except the unit.
2. With the unit operating, time the smallest dial on the meter for one complete revolution. If this is a 2 cubic foot dial, divide the seconds by 2; if it is a 1 cubic foot dial, use the seconds as is. This gives the seconds per cubic foot of gas being delivered to the unit.
3. INPUT=GAS HTG VALUE x 3600 / SEC. PER CUBIC FOOT

   Example: Natural gas with a heating value of 1000 BTU per cubic foot and 36 seconds per cubic foot as determined by

   Step 2, then:
   Input = 1000 x 3600 / 36 = 100,000 BTU per Hour.

   NOTE: BTU content of the gas should be obtained from the gas supplier. This measured input must not be greater than shown on the unit rating plate.

4. Relight all other appliances turned off in step 1. Be sure all pilot burners are operating.

Temperature Rise Check

Check the temperature rise through the unit by placing thermometers in supply and return air registers as close to the unit as possible. Thermometers must not be able to sample temperature directly from the unit heat exchangers, or false readings could be obtained.

1. All registers must be open; all duct dampers must be in their final (fully or partially open) position and the unit operated for 15 minutes before taking readings.
2. The temperature rise must be within the range specified on the rating plate.

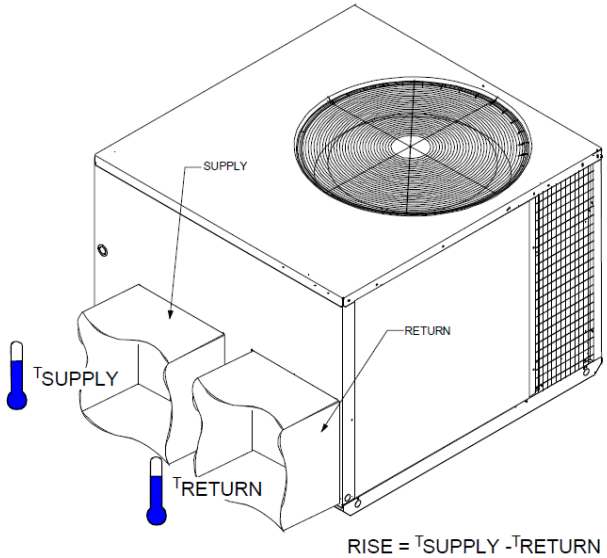

NOTE: Air temperature rise is the temperature difference between supply and return air.

With a properly designed system, the proper amount of temperature rise will normally be obtained when the unit is operated at rated input with the recommended blower speed.

If the correct amount of temperature rise is not obtained, it may be necessary to change the blower speed. A higher blower speed will lower the temperature rise. A slower blower speed will increase the temperature rise.

NOTE: Blower speed MUST be set to give the correct air temperature rise through the unit as marked on the rating plate.

External Static Pressure Check

The total external static pressure must be checked on this unit to determine if the airflow is proper.

1. Using a digital manometer measure the static pressure of the return duct at the inlet of the unit (Negative Pressure).

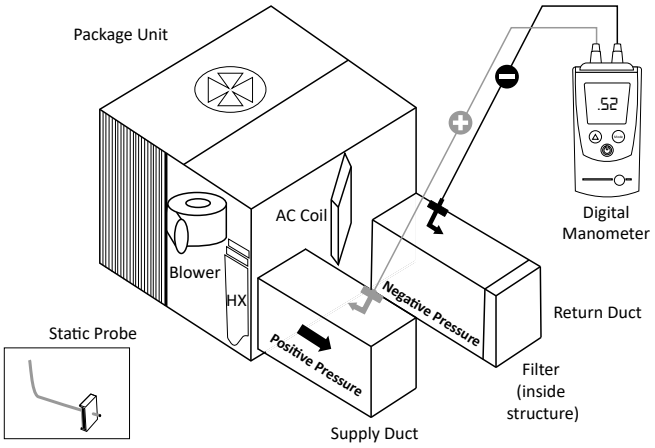

Total External Static

2. Measure the static pressure of the supply duct (Positive Pressure).
3. Add the two readings together.

NOTE: Both readings may be taken simultaneously and read directly on the manometer is so desired.

4. Consult proper table for quantity of air.

If the external static pressure exceeds the minimum or maximum allowable statics, check for closed dampers, dirty filters, undersized or poorly laid out ductwork.

Blower Speed Adjustments

WARNING

To avoid personal injury or death due to electric shock, remove electrical power from the unit before changing speed taps on the blower motor.

EEM Motors

NOTE: Refer to the wiring diagram in the appendix to verify speed tap settings.

DP14UM models are equipped with EEM motors. EEM motors are constant torque motors with very low power consumption. This motor is energized by 24V. Adjust the CFM for the unit by changing the 24V low voltage leads to the speed terminal block on the motor.

FAN ONLY			HEATING			COOLING		
SPEED TAP	DEFINITION	LEAD COLOR	SPEED TAP	DEFINITION	LEAD COLOR	SPEED TAP	DEFINTION	LEAD COLOR
T1	Fan Only	Green	T2	High Speed		T4	Low Speed	Yellow
			T3	Low Speed	White	T5	High Speed	

Single Stage Models

FAN ONLY			HEATING			COOLING		
SPEED TAP	DEFINITION	LEAD COLOR	SPEED TAP	DEFINTION	LEAD COLOR	SPEED TAP	DEFINITION	LEAD COLOR
T1	Fan Only	Green	T2	Heat	White	T3	Low Speed	Purple
						T4	High Speed	Yellow
						T5	High Speed Hi-Static	

Two Stage Models

NOTE: Heating airflow must be adjusted to provide the temperature rise shown on rating plate.

ECM Motors

The DP16UM models are equipped with ECM circulating blower motors. ECM circulating blower motors are constant airflow motors with very low power consumption. The ECM motor is controlled by 24VAC signals passed from an ECM interface module.

Thermostat leads when wired as per wiring diagram in appendix provides four blower speed outputs: FAN ONLY, HEAT, HI COOL and LOW COOL. These are 24VAC outputs and are passed to the ECM interface module. Depending on applied thermostat inputs, the ignition control will energize the appropriate blower speed output with 24VAC. This signal is passed to the ECM interface module, which in turn passes the signal to the ECM motor. The ECM motor then operates at the correct speed, delivering the appropriate airflow.

NOTE: FAN ONLY blower speed is approximately 75% of the HIGH COOL speed.

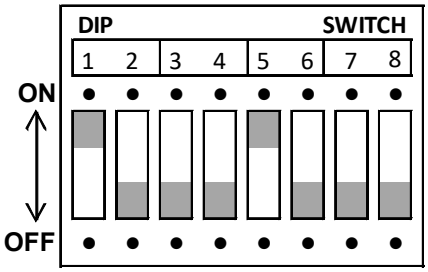

Factory DIP Switch Settings

Switches	Function
1, 2	Heating Speeds
3	Unused
4	OFF for Two-Stage
5, 6	Cooling Speeds
7, 8	Airflow Adjust

Dip Switch Functions

The blower speed as shipped from the factory should deliver the correct airflow. However, if installation conditions require a different airflow, the blower speed may be adjusted using the DIP switches on the ECM interface module (located in the blower compartment. Use the following figure and the airflow tables in the Appendix to set the desired blower speed.

NOTE: Heating airflow must be adjusted to provide the temperature rise shown on rating plate. Blower speeds are programmed to deliver adequate airflow at rated external static pressure (ESP). Refer to airflow table provided in the Appendix for details.

Limit Check

Check limit control operation after 15 minutes of operation by blocking the return air grille(s).

1. After several minutes the main burners must go OFF. Blower will continue to run.
2. Remove air restrictions and main burners will relight after a cool down period of a few minutes.

Adjust the thermostat setting below room temperature.

3. Main burners must go OFF.
4. Circulating Air Blower will continue to run for 90, 120, 150 or 180 seconds, depending on the setting.

NOTE: If necessary, adjust fan OFF delay settings to obtain satisfactory comfort level.

WARNING

This unit must be used as a "construction heater" during the finishing phases of construction on a new structure. This type of use may result in premature failure of the unit die to extremely low return air temperatures and exposure to corrosive or very dirty atmosphere.

Unit Shutdown

1. Set the thermostat to lowest setting.
2. Turn off the electrical power supply to the unit.
3. Remove the heat exchanger door on the side of the unit by removing screws.
4. Move the gas control valve switch to the OFF position. Do not force.
5. Close manual gas shutoff valve external to the unit.
6. Replace the heat exchanger door on the unit.
7. If cooling and/or air circulation will be desired, turn ON the electrical power.

Cooling Startup

NOTE: The outdoor temperature must be 60°F or higher before making adjustments to charge.

NOTE: Check all manual reset limit controls in heating circuit if cooling mode does not operate.

Compressor Protection Devices

The compressor includes components which are designed to protect the compressor against abnormal operating conditions.

WARNING

To prevent personal injury or death, always disconnect electrical power before inspecting or servicing the unit. NOTE: All compressor protection devices reset automatically, energizing the contactor and outdoor fan.

WARNING

Do not bypass safety devices.

Refrigerant Charge Check

After completing airflow measurements and adjustments the unit's refrigerant charge must be checked. The unit comes factory charged, but this charge is based on 325 CFM per ton and minimum ESP per AHRI test conditions (generally between .15 - .28 ESP). When air quantity or ESP is different than above, the refrigerant charge must be adjusted to the proper amount. All package units with fixed orifice devices are charged using the super heat method at the compressor suction line.

After superheat is adjusted it is recommended to check unit sub-cooling at the condenser coil liquid line out. For charge adjustments, see superheat and sub-cooling charts show for each model.

SUPERHEAT

Checking Superheat

Refrigerant gas is considered superheated whenever its temperature is higher than the saturation temperature corresponding to its pressure. The degree of superheat equals the degrees of temperature increase above the saturation temperature at existing pressure. See Temperature - Pressure Chart.

1. Run system at least 10 minutes to allow pressure to stabilize.
2. Temporarily install thermometer on suction (large) line near compressor with adequate contact and insulate for best possible reading.
3. Refer to the superheat table provided for proper system superheat. Add charge to lower superheat or recover charge to raise superheat.

Superheat Formula = Suct. Line Temp. - Sat. Suct. Temp.

Ambient Condenser Inlet Temp (°F Drybulb)	Return Air Temp. (°F Drybulb)				
	65	70	75	80	85
100	-	-	-	10	10
95	-	-	10	10	10
90	-	-	12	15	18
85	-	10	13	17	20
80	-	10	15	21	26
75	10	13	17	25	29
70	10	17	20	28	32
65	13	19	26	32	35
60	17	25	30	33	37

EXAMPLE:

a. Suction Pressure = 143
b. Corresponding Temp. °F = 50
c. Thermometer on Suction Line = 59°F.

To obtain the degrees temperature of superheat, subtract 50.0 from 59.0°F.

The difference is 9° Superheat. The 9° Superheat would fall in the ± range of allowable superheat.

Checking Subcooling

Refrigerant liquid is considered subcooled when its temperature is lower than the saturation temperature corresponding to its pressure. The degree of subcooling equals the degrees of temperature decrease below the saturation temperature at the existing pressure.

1. Attach an accurate thermometer or preferably a thermocouple type temperature tester to the liquid line close to the pressure switch.
2. Install a high side pressure gauge on the liquid access fitting.
3. Record the gauge pressure and the temperature of the line.
4. Compare the hi-pressure reading to the "Required Liquid Line Temperature" chart. Find the hi-pressure value on the left column. Follow that line right to the column under the design subcooling value. Where the two intersect is the required liquid line temperature. Alternately you can convert the liquid line pressure gauge reading to temperature by finding the gauge reading in Temperature - Pressure Chart and reading to the left, find the temperature in the °F. Column.
5. The difference between the thermometer reading and pressure to temperature conversion is the amount of subcooling.

Subcooling Formula = Sat. Liquid Temp. - Liquid Line Temp.

EXAMPLE:

a. Liquid Line Pressure = 417
b. Corresponding Temp. °F = 120°
c. Thermometer on Liquid line = 109°F.

To obtain the amount of subcooling, subtract 109°F from 120°F The difference is 11° subcooling. See the specification sheet or technical information manual for the design subcooling range for your unit.

See R410A Pressure vs. Temperature chart.

Cooling Refrigerant Charging (Models with TXV)

Check unit charge before putting the cooling section into full operation. The unit has a thermostatic expansion valve metering device. To ensure the unit is properly charged for the intended application, check the unit refrigerant sub-cooling at the condenser. The refrigerant sub-cooling is a function of outdoor ambient temperature and return air temperature of the conditioned space. It is the installing contractors responsibility to ensure the proper refrigerant sub-cooling at the condenser is adjusted for each application. As the outdoor ambient temperature rises the sub-cooling decreases and as the outdoor ambient temperature lowers, the sub-cooling increases.

NOTE: Proper sub-cooling adjustment optimizes cooling performance. Models equipped with thermostatic expansion valve, charge the system to sub-cooling, range shown on chart, when necessary, adjust expansion valve stem for superheat setting.

NOTE: The expansion valve will not need adjustment for most applications. Ensure system superheat is set within range listed on chart.

Design superheat & subcooling @ 95 °F outdoor ambient temperature		
Models #	Superheat °F	Subcooling °F
DP14UM240404*	10 - 14	8 - 14
DP14UM300604*	3 - 7	12 - 18
DP14UM360604*	4 - 8	8 - 14
DP14UM360804*	4 - 8	8 - 14
DP14UM420804*	8 - 12	9 - 15
DP14UM480804*	2 - 6	9 - 15
DP14UM610804*	9 - 13	8 - 14
DP16UM3008041	8 - 12	10 - 14
DP16UM3608041	10 - 14	8 - 12

Superheat Adjustment

To adjust superheat, remove the control box cover and locate the expansion valve on the liquid line of the evaporator. Unscrew the cover from the expansion valve, locate the adjustment screw, and turn it clockwise (in) to increase superheat or counterclockwise (out) to decrease superheat. Replace adjustment cap. Wait a minimum of 10 minutes between adjustments to allow time for the TXV and pressures to stabilize.

Cooling Operation

NOTE: Mechanical cooling cannot be reliably provided at ambient temperatures below 50° F.

1. Turn on the electrical power supply to the unit.
2. Place the room thermostat selector switch in the COOL position (or AUTO if available, and if automatic changeover from cooling to heating is desired).
3. Set the room thermostat to the desired temperature.

TROUBLESHOOTING

Ignition Control Error Codes

The following presents probable causes of questionable unit operation. Refer to Diagnostic Indicator Chart for an interpretation of the signal and to this section for an explanation.

Remove the control box access panel and note the number of diagnostic LED flashes. Refer to Diagnostic Indicator Chart for an interpretation of the signal and to this section for an explanation.

Fault Recall

The ignition control is equipped with a momentary push-button switch that can be used to display on the diagnostic LED the last five faults detected by the control. Any time the control is powered, the fault code history can be retrieved for display by depressing and releasing the button once (less than 5 seconds); the LED will flash the Fault Code History (up to 5 fault codes from newest to oldest). The Fault Code History is retained between power cycles until cleared. A fault code is added to the history log as it is encountered if it differs from the most recent history log item. If the history log is already full, then the oldest entry is dropped from the log and the remaining entries are moved down in the Fault Code History so that the new fault can be added to the Fault Code History as the most recent fault.

NOTE: Do not hold for longer than 5 seconds. Holding the button for 5 seconds or higher will erase the memory!

Resetting From Lockout

An external lockout occurs if the integrated ignition control determines that a measurable combustion cannot be established within three (3) consecutive ignition attempts. If flame is not established within the four (4) second trial for ignition, the gas valve is de-energized, 30 second inter-purge cycle is completed, and ignition is re-attempted. The control will repeat this routine three times if a measurable combustion is not established. The control will then shut off the induced draft blower and go into a lockout state.

If flame is established but lost, the control will energize the circulator blower at the heat speed and then begin a new ignition sequence. If flame is established then lost on subsequent attempts, the control will recycle the ignition sequence.

The diagnostic fault code is 1 flash for a lockout due to failed ignition attempts. The integrated control will automatically reset after one hour, or it can be reset by removing the thermostat signal or disconnecting the electrical power supply for over five seconds.

IMPORTANT NOTE: If you have to frequently reset your gas/electric package unit, it means that a problem exists that should be corrected. Contact a qualified servicer for further information.

Pressure Sensor

The pressure sensor is mounted near induced draft blower. Its function is to regulate the induced draft blower's speed in order to maintain proper air-fuel ratio for clean and reliable combustion. The electrical output signal from the sensor is expected to be proportional to the magnitude of the differential pressure between the inducer inlet negative pressure and the ambient air pressure. The pressure sensor also guards against insufficient airflow (combustion air and flue products) through the heat exchanger.

At the beginning of a call for heat, the control ensures the inducer is in an off state, then checks the pressure sensor output for the proper null offset value. If the pressure sensor output is outside the acceptable range for the null value, the control enters a five minute lockout. After the lockout timer has expired, the control resumes normal operation.

During inducer operation, including all operating modes except for the null test, the control monitors the pressure sensor output for expected values. The control limits during normal operation are expected to be within certain tolerances of the target pressures. In response to a pressure sensor span error, the control enters a five minute lockout. After the lockout timer has expired, the control resumes normal operation.

Primary Limit

A primary limit will open due to excessive supply air temperatures. This can be caused by a dirty filter, excessive duct static, insufficient air flow, or a faulty limit. Check filters, total external duct static, blower motor, blower motor speed tap (see wiring diagram), and limit. This limit will automatically reset once the temperature falls below a preset level.

If a limit switch opens, the gas valve is immediately de-energized, the induced draft and air circulating blowers are energized. The induced draft and air circulator blowers remain energized for 5 minutes or until the limit switch re-closes, whichever happens first.

NOTE: If the primary limit opens three (3) times within the same call for heat, the ignition control will lock out for one (1) hour with the air circulating blower energized at high heat speed.

Flame Detected with Gas Valve Closed

If flame is detected with the gas valve de-energized, the combustion and air circulator blowers are energized. The control can be reset by removing the power supply to the unit or it will automatically reset after one hour. Miswiring is the probable cause for this fault. The initial lockout period is 5 minutes. After that time, the control continues to monitor the flame sense input and resumes normal operation when flame is no longer sensed.

Low Flame Signal

Under some conditions, the fuel or air supply can create a nearly invisible coating on the flame sensor. This coating acts as an insulator causing a drop in the flame signal. If the flame signal drops below a predetermined value, the ignition control will display an error code of (1) flash on the amber diagnostic LED. The unit will continue to operate until the control can no longer detect flame.

Burner Temperature Switch

The burner temperature switch is mounted on the burner assembly to monitor the burner box temperature. It is normally closed (electrically), auto-reset switch. This switch guards against the burner flames not being properly drawn into the heat exchanger.

The control senses an open blocked burner switch, indicating that the burner temperature/pressure has exceeded its set point. The control de-energizes the gas valve, energizes the inducer to the pre-purge setting and energizes the indoor blower. The initial lockout period is five minutes. After this time elapses, the control evaluates the state of the blocked burner switch. If the switch is closed, the control resumes normal operation. The control will enter a one hour lockout state if the blocked burner switch fails to reset before the recovery timer has expired.

ID Plug

The control operational parameters are stored in ID Plug which connects on the circuit board. The control requires a valid ID plug present to operate in heating mode. If a valid ID plug is not present the control will not respond to a call for heat. However, the control will respond to thermostat inputs "Y" or "G", operating the appropriate fan output. The cooling delays are ignored in this operating mode. The control puts the burner into hard lockout and will not respond to heating requests until the power is cycled with a valid ID plug installed.

Abnormal Operation - Cooling
Short Cycle Compressor Delay

In the event of intermittent power losses or intermittent thermostat operation, the control system will delay output to the compressor contactor for three minutes from the time power is restored or thermostat call for cooling is restored. (Compressor is off a total of three minutes).

NOTE: Some electronic thermostats also have a built-in compressor short cycle timer that may be longer than the three minute delay given above. If you are using an electronic thermostat and the compressor has not started after three minutes, wait an additional five minutes to allow the thermostat to complete its short cycle delay time.

High Pressure Switch/Loss of Charge Switch

Some models include a high pressure cutout switch and/or a loss of charge cutout switch. The high pressure cutout switch protects the refrigeration system from excessive operating pressures. The loss of charge cutout switch protects the refrigeration system from very low operating pressures due to a loss of refrigerant. Compressor operation will be disabled if either of these devices opens.

MAINTENANCE

WARNING

HIGH VOLTAGE
Disconnect ALL power before servicing or installing this unit. Multiple power sources may be present. Failure to do so may cause property damage, personal injury or death.

Have the gas heating section of the unit checked at least once a year before the heating season begins, to be sure that the combustion air inlet and flue outlet hoods are not blocked by debris, which would prevent adequate combustion air and a properly operating vent system.

Filter Replacement or Cleaning

A return air filter is not supplied with this unit; however, there must be a means of filtering all of the return air. The filter(s) may be located in the return air duct(s), or return air filter grille(s). Consult with your installing dealer for the actual location of the return air filter(s) for your unit.

Dirty filters are the most common cause of inadequate heating or cooling performance. Filter inspection should be made at least every two months; more often if necessary because of local conditions and usage.

Dirty throwaway filters should be discarded and replaced with a new, clean filter. Dirty permanent filters should be washed with water, thoroughly dried and sprayed with a filter adhesive before being reinstalled (Filter adhesives may be found at many hardware stores). Permanent filters should last several years. However, should one become torn or uncleanable, it should be replaced.

Cabinet Finish Maintenance

Use a fine grade automotive wax on the cabinet finish to maintain the finishes original high luster. This is especially important in installations with extended periods of direct sunlight.

Clean Outside Coil (Qualified Servicer Only)

The coil with the outside air flowing over it should be inspected annually and cleaned as frequently as necessary to keep the finned areas free of lint, hair and debris.

Condenser, Evaporator, and Induced Draft Motors

Bearings on the air circulating blower motor, condenser motor and the combustion fan motor are permanently lubricated. No additional oiling is required.

Flame Sensor (Qualified Servicer Only)

A drop in the flame current can be caused by a nearly invisible coating on the flame sensor. This coating, created by the fuel or combustion air supply, can be removed by carefully cleaning the flame sensor with steel wool.

NOTE: After cleaning, the microamp signal should be stable and in the range of 5-10 microamps DC.

Flue Passages (Qualified Servicer Only)

At the start of each heating season, inspect and, if necessary, clean the unit flue passage.

Cleaning Flue Passages (Qualified Servicer Only)

1. Shut off electric power and gas supply to the unit.
2. Remove burner assembly by disconnecting the gas line and removing the manifold bracket from the partition panel.
3. Remove the flue from the induced draft blower and the collector box cover from the partition panel.
4. The primary heat exchanger tubes can be cleaned using a round wire brush attached to a length of high grade stainless steel cable, such as drain cleanout cable. Attach a variable speed reversible drill to the other end of the spring cable. Slowly rotate the cable with the drill and insert it into one of the primary heat exchanger tubes. While reversing the drill, work the cable in and out several times to obtain sufficient cleaning. Use a large cable for the large tube, and then repeat the operation with a small cable for the smaller tube. Repeat for each tube.
5. When all heat exchanger tubes have been cleaned, replace the parts in the reverse order in which they were removed.
6. To reduce the chances of repeated fouling of the heat exchanger, perform the steps listed in “Startup, Adjustments, and Checks”.

Burners

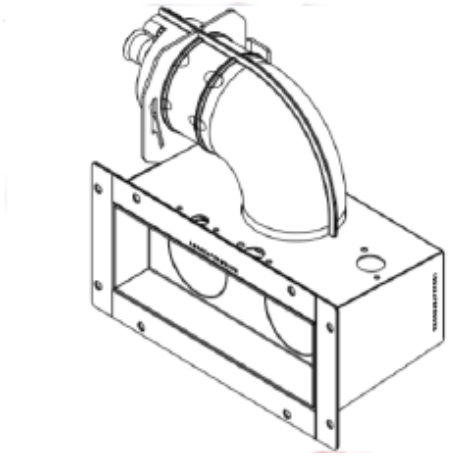

WARNING

To avoid personal injury or death due to electrical shock, do not remove any internal compartment covers or attempt any adjustment. Contact a qualified servicer at once if an abnormal flame should develop.

The Ultra low NOx models are equipped with premix burner. The burner box is sealed to achieve safe and reliable operation. The burner box should not have any blockage near the air-gas mixer inlet.

CAUTION

Label all wires prior to disconnection when servicing controls. Wiring errors can cause improper and dangerous operation.

CAUTION

Always verify proper operation after servicing.

For further information on the yearly inspection, consult the User Manual. It is recommended that a qualified servicer inspect and service the unit at least once each year.

Turn the unit on at the thermostat. Wait a few minutes, since any dislodged dust will alter the normal flame appearance. Flames should be predominantly blue and directed into the tubes. They should not be yellow. They should extend directly outward from the burner ports without curling downward, floating or lifting off the ports.

ACCESSORIES AND FUNCTIONAL PARTS

Sheet Metal Accessories

Additional accessories can be purchased to fit specific application needs. Parts and instructions are available from your distributor.

FUNCTIONAL PARTS

FUNCTIONAL PARTS	
Auxiliary Limit Switch	Gas Orifice
Blower Housing	Gas Valve
Blower/Collector Box Gasket	Gas Manifold
Blower Wheel	Heat Exchanger
Burner	High Limit Switch
Burner Box Gasket	High Pressure Switch
Burner Temperature Switch	ID Plug
Capacitor	Igniter
Circulator Blower Motor	Ignition Control
Compressor	Induced Draft Blower
Condenser Coil	Pressure Sensor
Condenser Fan Blade	Pressure Sensor Hose
Condenser Fan Motor	Spark Igniter Module
Contactor	Thermostatic Expansion Valve
ECM Interface Module	Transformer
Evaporator Coil	Time Delay Relay
Flame Sensor	Low Pressure Switch

Functional Parts List

General Information

1. Refer to the description in Functional Parts List when ordering any of the listed functional parts. Be sure to provide the unit model and serial numbers with the order.
2. Although only functional parts are shown, all sheet metal parts, doors, etc. may be ordered by description.
3. Parts are available from your distributor.

APPENDIX

Diagnostic Chart

THE STATUS LIGHT ON THE FURNACE CONTROL MAY BE USED AS A GUIDE TO TROUBLESHOOTING THIS APPLIANCE. SOME MORE USEFUL STATUS LIGHT CODES ARE BELOW:

LED ACTIVITY	DESCRIPTION	COLOR	MINIMUM LOCKOUT PERIOD[1]	LED ACTIVITY	DESCRIPTION	COLOR	MINIMUM LOCKOUT PERIOD[1]	LED ACTIVITY	DESCRIPTION	COLOR	MINIMUM LOCKOUT PERIOD[1]
LED OFF	NO 24 VAC POWER TO CONTROL	_____	N/A	6 FLASHES	NORMALLY CLOSED BLOCKED BURNER SWITCH/AUXILIARY SWITCH OPEN	RED	MAXIMUM RECOVERY TIME - 1 HOUR IF TIME EXCEEDED	2 FLASHES	ID PLUG FAILURE	AMBER	HARD LOCKOUT HEATING MODE
RED, AMBER, GREEN	POWER-UP VERIFICATION OF LED	_____	N/A	7 FLASHES	GAS VALVE CIRCUIT SHORTED	RED	1 HOUR	3 FLASHES	CONTROL FUSE OPEN	AMBER	5 MINUTES
STEADY ON	CONTROL FAULT DETECTED	RED	1 HOUR OR HARD LOCKOUT	8 FLASHES	RESERVED	RED	_____	STEADY ON	STANDBY NORMAL OPERATION NO THERMOSTAT REQUESTS	GREEN	N/A
1 FLASH	RETRIES EXCEEDED	RED	1 HOUR FIXED	10 FLASHES	HIGH LIMIT SWITCH RECOVERY TIMER EXPIRED	RED	1 HOUR OR HARD LOCKOUT	RAPID FLASH	CLEAR ERROR HISTORY	GREEN	N/A
2 FLASHES	PRESSURE SENSOR NULL ERROR	RED	5 MINUTES	STEADY ON	OEM FACTORY TEST MODE	AMBER	N/A	1 FLASH	CALL FOR HEATING	GREEN	N/A
3 FLASHES	PRESSURE SENSOR SPAN ERROR	RED	5 MINUTES	RAPID FLASH	FIELD TEST MODE	AMBER	N/A	2 FLASHES	CALL FOR COOLING	GREEN	N/A
4 FLASHES	HIGH LIMIT SWITCH OPEN	RED	MAXIMUM RECOVERY TIME - 1 HOUR IF TIME EXCEEDED	1 FLASH	LOW FLAME SENSE	AMBER	N/A	3 FLASHES	CONTINUOUS FAN OPERATION	GREEN	N/A
5 FLASHES	FLAME PRESENT WITH GAS VALVE OFF	RED	5 MINUTES	_____	_____	_____	_____	_____	_____	_____	_____

[1]THE FAULT CONDITION MUST BE CLEARED FOR 30 SECONDS BEFORE NORMAL OPERATION CAN RESUME. A POWER CYCLE WILL ASLO RESET ANY LOCKOUT.

APPENDIX

Unit Dimensions

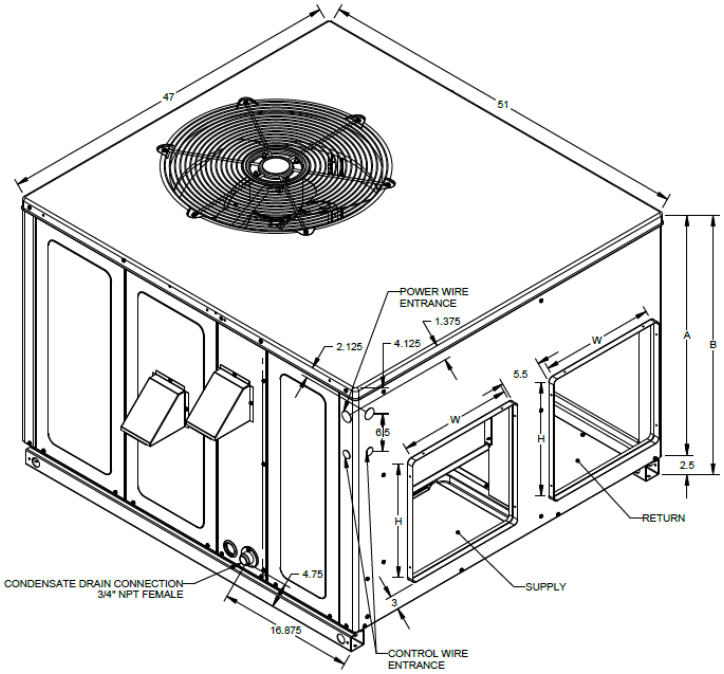

Model	Unit Dimensions (Inches)				Chassis Size
			Height		
	W	D	A	B	
DP14UM24***41**	47	51	32	34 1/2	Medium
DP14UM30***41**	47	51	32	34 1/2	Medium
DP14UM36***41**	47	51	32	34 1/2	Medium
DP14UM42***41**	47	51	40	42 1/2	Large
DP14UM48***41**	47	51	40	42 1/2	Large
DP14UM61***41**	47	51	40	42 1/2	Large

Model	Unit Dimensions (Inches)				Chassis Size
			Height		
	W	D	A	B	
DP16UM30***41**	47	51	32	34 1/2	Medium
DP16UM36***41**	47	51	40	42 1/2	Large

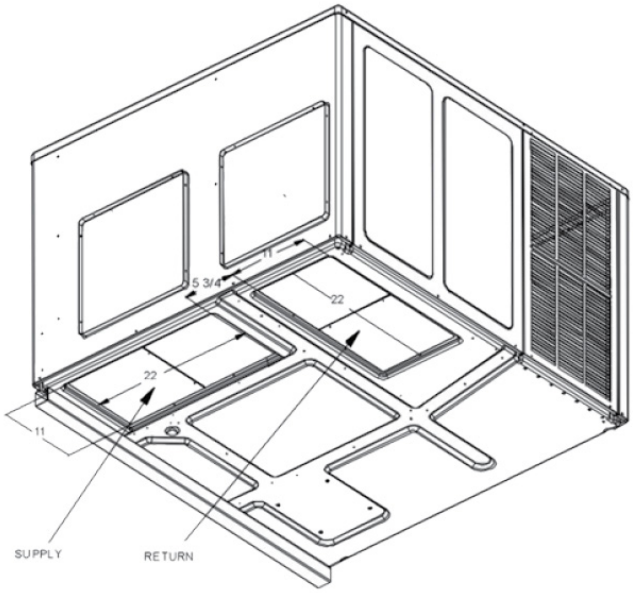

Model	Duct Openings			
	Supply		Return	
	W	H	W	H
DP14UM24***41**	16	16	16	16
DP14UM30***41**	16	16	16	16
DP14UM36***41**	16	16	16	16
DP14UM42***41**	16	18	16	18
DP14UM48***41**	16	18	16	18
DP14UM61***41**	16	18	16	18

Model	Duct Openings			
	Supply		Return	
	W	H	W	H
DP16UM30***41**	16	16	16	16
DP16UM36***41**	16	18	16	18

WARNING

HIGH VOLTAGE!
DISCONNECT ALL POWER BEFORE SERVICING OR INSTALLING THIS UNIT. MULTIPLE POWER SOURCES MAY BE PRESENT. FAILURE TO DO SO MAY CAUSE PROPERTY DAMAGE, PERSONAL INJURY OR DEATH.

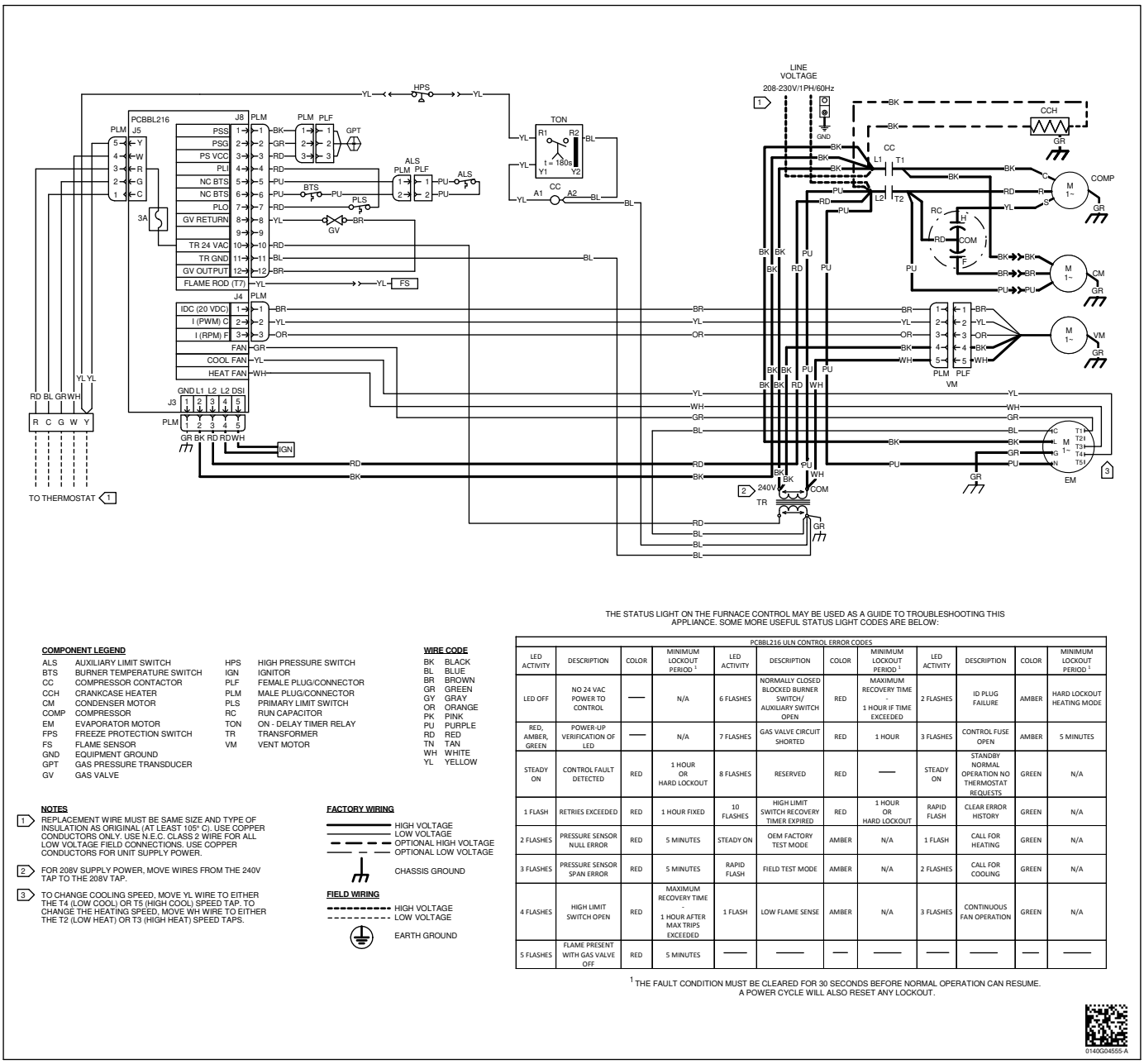

THE STATUS LIGHT ON THE FURNACE CONTROL MAY BE USED AS A GUIDE TO TROUBLESHOOTING THIS APPLIANCE. SOME MORE USEFUL STATUS LIGHT CODES ARE BELOW:

PCBBL216 ULN CONTROL ERROR CODES

LED ACTIVITY	DESCRIPTION	COLOR	MINIMUM LOCKOUT PERIOD [1]	LED ACTIVITY	DESCRIPTION	COLOR	MINIMUM LOCKOUT PERIOD [1]	LED ACTIVITY	DESCRIPTION	COLOR	MINIMUM LOCKOUT PERIOD [1]
LED OFF	NO 24 VAC POWER TO CONTROL	—	N/A	6 FLASHES	NORMALLY CLOSED BLOCKED BURNER SWITCH/ AUXILIARY SWITCH OPEN	RED	MAXIMUM RECOVERY TIME - 1 HOUR IF TIME EXCEEDED	2 FLASHES	ID PLUG FAILURE	AMBER	HARD LOCKOUT HEATING MODE
RED, AMBER, GREEN	POWER-UP VERIFICATION OF LED	—	N/A	7 FLASHES	GAS VALVE CIRCUIT SHORTED	RED	1 HOUR	3 FLASHES	CONTROL FUSE OPEN	AMBER	5 MINUTES
STEADY ON	CONTROL FAULT DETECTED	RED	1 HOUR OR HARD LOCKOUT	8 FLASHES	RESERVED	RED	—	STEADY ON	STANDBY NORMAL OPERATION NO THERMOSTAT REQUESTS	GREEN	N/A
1 FLASH	RETRIES EXCEEDED	RED	1 HOUR FIXED	10 FLASHES	HIGH LIMIT SWITCH RECOVERY TIMER EXPIRED	RED	1 HOUR OR HARD LOCKOUT	RAPID FLASH	CLEAR ERROR HISTORY	GREEN	N/A
2 FLASHES	PRESSURE SENSOR NULL ERROR	RED	5 MINUTES	STEADY ON	OEM FACTORY TEST MODE	AMBER	N/A	1 FLASH	CALL FOR HEATING	GREEN	N/A
3 FLASHES	PRESSURE SENSOR SPAN ERROR	RED	5 MINUTES	RAPID FLASH	FIELD TEST MODE	AMBER	N/A	2 FLASHES	CALL FOR COOLING	GREEN	N/A
4 FLASHES	HIGH LIMIT SWITCH OPEN	RED	MAXIMUM RECOVERY TIME - 1 HOUR AFTER MAX TRIPS EXCEEDED	1 FLASH	LOW FLAME SENSE	AMBER	N/A	3 FLASHES	CONTINUOUS FAN OPERATION	GREEN	N/A
5 FLASHES	FLAME PRESENT WITH GAS VALVE OFF	RED	5 MINUTES	—	—	—	—	—	—	—	—

[1] THE FAULT CONDITION MUST BE CLEARED FOR 30 SECONDS BEFORE NORMAL OPERATION CAN RESUME. A POWER CYCLE WILL ALSO RESET ANY LOCKOUT.

COMPONENT LEGEND

ALS	AUXILIARY LIMIT SWITCH	HPS	HIGH PRESSURE SWITCH
BTS	BURNER TEMPERATURE SWITCH	IGN	IGNITOR
CC	COMPRESSOR CONTACTOR	PLF	FEMALE PLUG/CONNECTOR
CCH	CRANKCASE HEATER	PLM	MALE PLUG/CONNECTOR
CM	CONDENSER MOTOR	PLS	PRIMARY LIMIT SWITCH
COMP	COMPRESSOR	RC	RUN CAPACITOR
EM	EVAPORATOR MOTOR	TON	ON - DELAY TIMER RELAY
FPS	FREEZE PROTECTION SWITCH	TR	TRANSFORMER
FS	FLAME SENSOR	VM	VENT MOTOR
GND	EQUIPMENT GROUND		
GPT	GAS PRESSURE TRANSDUCER		
GV	GAS VALVE		

WIRE CODE

BK	BLACK
BL	BLUE
BR	BROWN
GR	GREEN
GY	GRAY
OR	ORANGE
PK	PINK
PU	PURPLE
RD	RED
TN	TAN
WH	WHITE
YL	YELLOW

NOTES

1. REPLACEMENT WIRE MUST BE SAME SIZE AND TYPE OF INSULATION AS ORIGINAL (AT LEAST 105° C). USE COPPER CONDUCTORS ONLY. USE N.E.C. CLASS 2 WIRE FOR ALL LOW VOLTAGE FIELD CONNECTIONS. USE COPPER CONDUCTORS FOR UNIT SUPPLY POWER.
2. FOR 208V SUPPLY POWER, MOVE WIRES FROM THE 240V TAP TO THE 208V TAP.
3. TO CHANGE COOLING SPEED, MOVE YL WIRE TO EITHER THE T4 (LOW COOL) OR T5 (HIGH COOL) SPEED TAP. TO CHANGE THE HEATING SPEED, MOVE WH WIRE TO EITHER THE T2 (LOW HEAT) OR T3 (HIGH HEAT) SPEED TAPS.

FACTORY WIRING

- HIGH VOLTAGE
- LOW VOLTAGE
- OPTIONAL HIGH VOLTAGE
- OPTIONAL LOW VOLTAGE
- CHASSIS GROUND

FIELD WIRING

- HIGH VOLTAGE
- LOW VOLTAGE
- EARTH GROUND

0140G04555-A

Wiring is subject to change. Always refer to the wiring diagram on the unit for the most up-to-date wiring.

WARNING

HIGH VOLTAGE!
DISCONNECT ALL POWER BEFORE SERVICING OR INSTALLING THIS UNIT. MULTIPLE POWER SOURCES MAY BE PRESENT. FAILURE TO DO SO MAY CAUSE PROPERTY DAMAGE, PERSONAL INJURY OR DEATH.

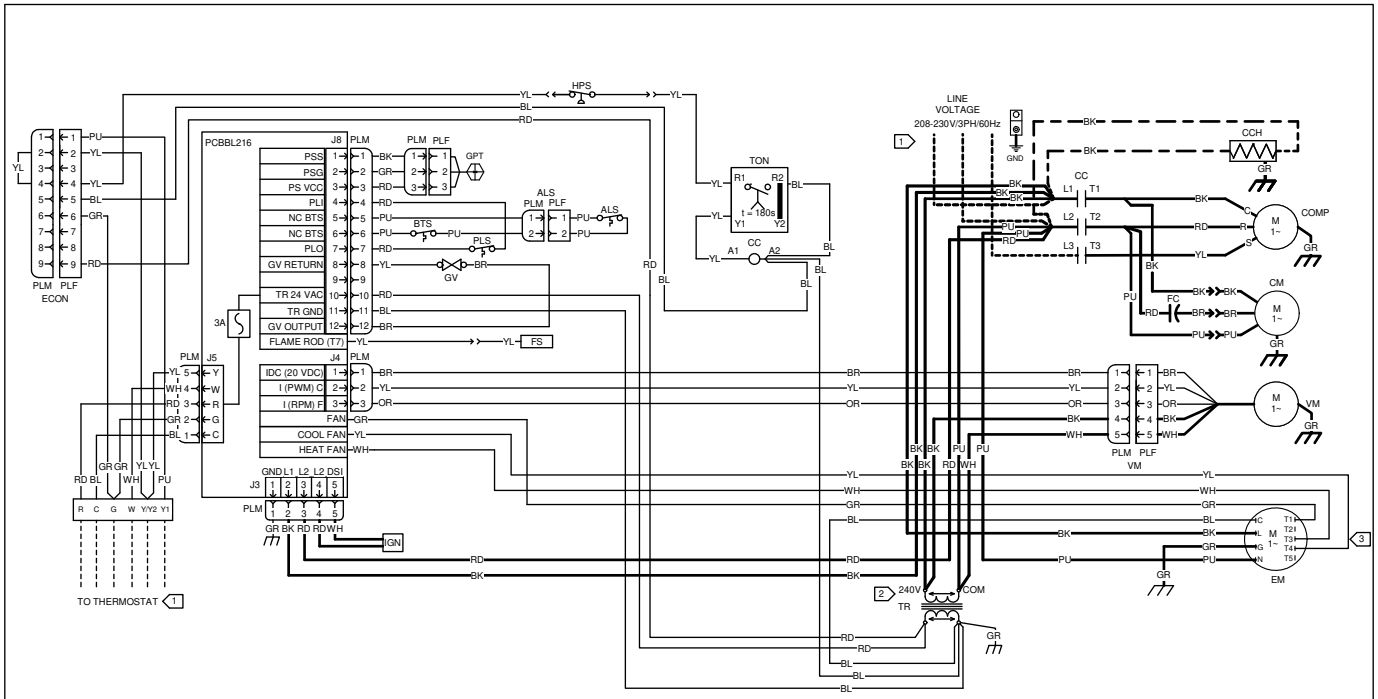

COMPONENT LEGEND

ALS	AUXILIARY LIMIT SWITCH	GPT	GAS PRESSURE TRANSDUCER
BTS	BURNER TEMPERATURE SWITCH	GV	GAS VALVE
CC	COMPRESSOR CONTACTOR	HPS	HIGH PRESSURE SWITCH
CCH	CRANKCASE HEATER	IGN	IGNITOR
CM	CONDENSER MOTOR	PLF	FEMALE PLUG/CONNECTOR
COMP	COMPRESSOR	PLM	MALE PLUG/CONNECTOR
ECON	ECONOMIZER	PLS	PRIMARY LIMIT SWITCH
EM	EVAPORATOR MOTOR	TON	ON - DELAY TIMER RELAY
FC	FAN CAPACITOR	TR	TRANSFORMER
FPS	FREEZE PROTECTION SWITCH	VM	VENT MOTOR
FS	FLAME SENSOR		
GND	EQUIPMENT GROUND		

WIRE CODE

BK	BLACK
BL	BLUE
BR	BROWN
GR	GREEN
GY	GRAY
OR	ORANGE
PK	PINK
PU	PURPLE
RD	RED
TN	TAN
WH	WHITE
YL	YELLOW

FACTORY WIRING

- HIGH VOLTAGE
- LOW VOLTAGE
- OPTIONAL HIGH VOLTAGE
- OPTIONAL LOW VOLTAGE
- CHASSIS GROUND

FIELD WIRING

- HIGH VOLTAGE
- LOW VOLTAGE
- EARTH GROUND

THERMOSTAT FIELD WIRING

NO ECONOMIZER

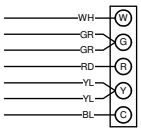

ECONOMIZER INSTALLED

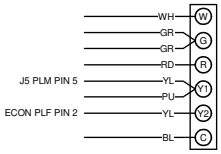

THE STATUS LIGHT ON THE FURNACE CONTROL MAY BE USED AS A GUIDE TO TROUBLESHOOTING THIS APPLIANCE. SOME MORE USEFUL STATUS LIGHT CODES ARE BELOW:

PCBBL216 ULN CONTROL ERROR CODES

LED ACTIVITY	DESCRIPTION	COLOR	MINIMUM LOCKOUT PERIOD [1]	LED ACTIVITY	DESCRIPTION	COLOR	MINIMUM LOCKOUT PERIOD [1]	LED ACTIVITY	DESCRIPTION	COLOR	MINIMUM LOCKOUT PERIOD [1]
LED OFF	NO 24 VAC POWER TO CONTROL	—	N/A	6 FLASHES	NORMALLY CLOSED BLOCKED BURNER SWITCH/ AUXILIARY SWITCH OPEN	RED	MAXIMUM RECOVERY TIME - 1 HOUR IF TIME EXCEEDED	2 FLASHES	ID PLUG FAILURE	AMBER	HARD LOCKOUT HEATING MODE
RED, AMBER, GREEN	POWER-UP VERIFICATION OF LED	—	N/A	7 FLASHES	GAS VALVE CIRCUIT SHORTED	RED	1 HOUR	3 FLASHES	CONTROL FUSE OPEN	AMBER	5 MINUTES
STEADY ON	CONTROL FAULT DETECTED	RED	1 HOUR OR HARD LOCKOUT	8 FLASHES	RESERVED	RED	—	STEADY ON	STANDBY NORMAL OPERATION NO THERMOSTAT REQUESTS	GREEN	N/A
1 FLASH	RETRIES EXCEEDED	RED	1 HOUR FIXED	10 FLASHES	HIGH LIMIT SWITCH RECOVERY TIMER EXPIRED	RED	1 HOUR OR HARD LOCKOUT	RAPID FLASH	CLEAR ERROR HISTORY	GREEN	N/A
2 FLASHES	PRESSURE SENSOR NULL ERROR	RED	5 MINUTES	STEADY ON	OEM FACTORY TEST MODE	AMBER	N/A	1 FLASH	CALL FOR HEATING	GREEN	N/A
3 FLASHES	PRESSURE SENSOR SPAN ERROR	RED	5 MINUTES	RAPID FLASH	FIELD TEST MODE	AMBER	N/A	2 FLASHES	CALL FOR COOLING	GREEN	N/A
4 FLASHES	HIGH LIMIT SWITCH OPEN	RED	MAXIMUM RECOVERY TIME - 1 HOUR AFTER MAX TRIPS EXCEEDED	1 FLASH	LOW FLAME SENSE	AMBER	N/A	3 FLASHES	CONTINUOUS FAN OPERATION	GREEN	N/A
5 FLASHES	FLAME PRESENT WITH GAS VALVE OFF	RED	5 MINUTES	—	—	—	—	—	—	—	—

[1] THE FAULT CONDITION MUST BE CLEARED FOR 30 SECONDS BEFORE NORMAL OPERATION CAN RESUME. A POWER CYCLE WILL ALSO RESET ANY LOCKOUT.

NOTES

1. REPLACEMENT WIRE MUST BE SAME SIZE AND TYPE OF INSULATION AS ORIGINAL (AT LEAST 105° C). USE COPPER CONDUCTORS ONLY. USE N.E.C. CLASS 2 WIRE FOR ALL LOW VOLTAGE FIELD CONNECTIONS. USE COPPER CONDUCTORS FOR UNIT SUPPLY POWER.
2. FOR 208V SUPPLY POWER, MOVE WIRES FROM THE 240V TAP TO THE 208V TAP.
3. TO CHANGE COOLING SPEED, MOVE YL WIRE TO EITHER THE T4 (LOW COOL) OR T5 (HIGH COOL) SPEED TAP. TO CHANGE THE HEATING SPEED, MOVE WH WIRE TO EITHER THE T2 (LOW HEAT) OR T3 (HIGH HEAT) SPEED TAPS.

0140G04556-A

WARNING

HIGH VOLTAGE!
DISCONNECT ALL POWER BEFORE SERVICING OR INSTALLING THIS UNIT. MULTIPLE POWER SOURCES MAY BE PRESENT. FAILURE TO DO SO MAY CAUSE PROPERTY DAMAGE, PERSONAL INJURY OR DEATH.

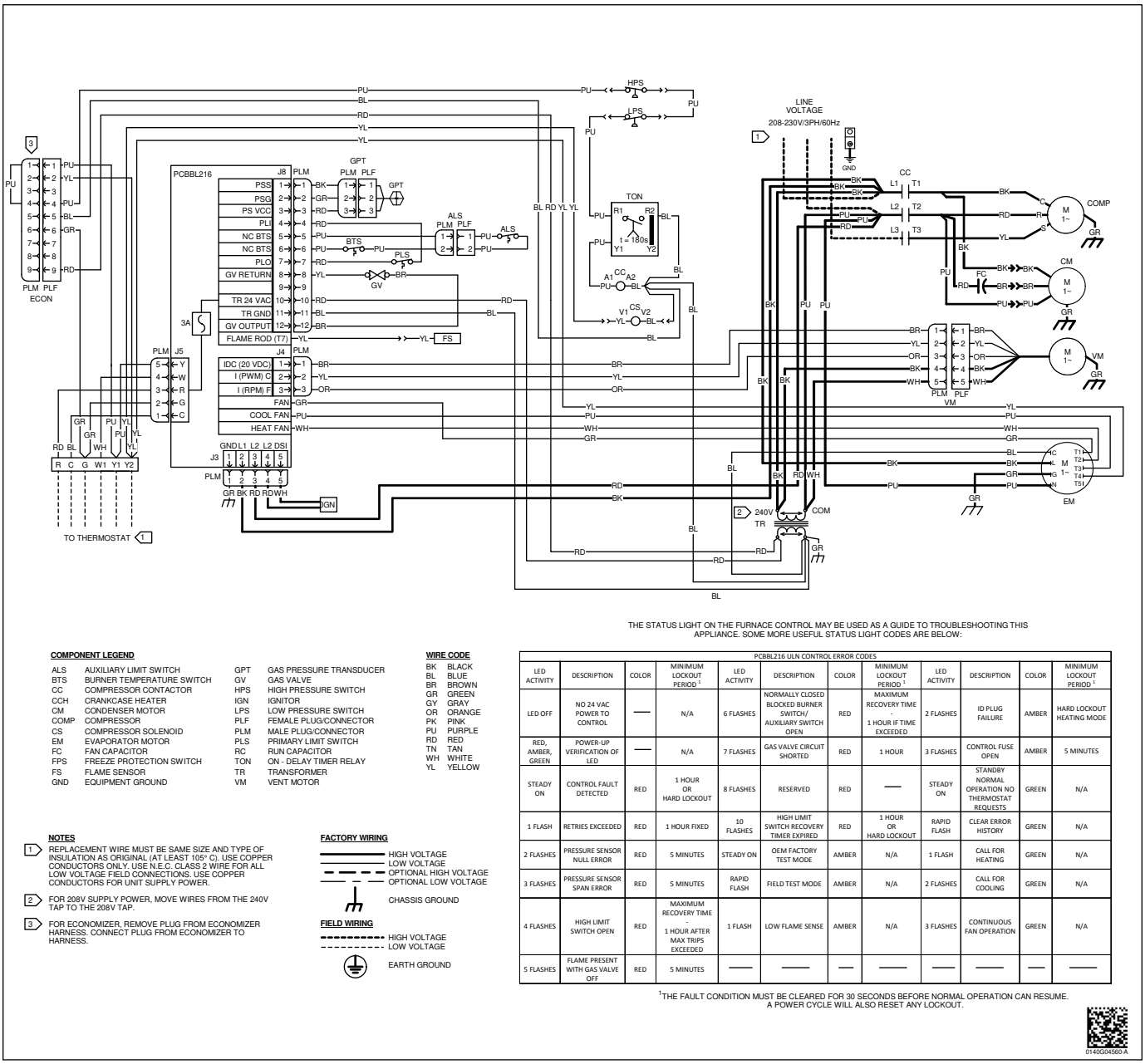

THE STATUS LIGHT ON THE FURNACE CONTROL MAY BE USED AS A GUIDE TO TROUBLESHOOTING THIS APPLIANCE. SOME MORE USEFUL STATUS LIGHT CODES ARE BELOW:

COMPONENT LEGEND

ALS	AUXILIARY LIMIT SWITCH	GPT	GAS PRESSURE TRANSDUCER
BTS	BURNER TEMPERATURE SWITCH	GV	GAS VALVE
CC	COMPRESSOR CONTACTOR	HPS	HIGH PRESSURE SWITCH
CCH	CRANKCASE HEATER	IGN	IGNITOR
CM	CONDENSER MOTOR	LPS	LOW PRESSURE SWITCH
COMP	COMPRESSOR	PLF	FEMALE PLUG/CONNECTOR
CS	COMPRESSOR SOLENOID	PLM	MALE PLUG/CONNECTOR
EM	EVAPORATOR MOTOR	PLS	PRIMARY LIMIT SWITCH
FC	FAN CAPACITOR	RC	RUN CAPACITOR
FPS	FREEZE PROTECTION SWITCH	TON	ON - DELAY TIMER RELAY
FS	FLAME SENSOR	TR	TRANSFORMER
GND	EQUIPMENT GROUND	VM	VENT MOTOR

WIRE CODE

BK	BLACK
BL	BLUE
BR	BROWN
GR	GREEN
GY	GRAY
OR	ORANGE
PK	PINK
PU	PURPLE
RD	RED
TN	TAN
WH	WHITE
YL	YELLOW

NOTES

1. REPLACEMENT WIRE MUST BE SAME SIZE AND TYPE OF INSULATION AS ORIGINAL (AT LEAST 105° C). USE COPPER CONDUCTORS ONLY. USE N.E.C. CLASS 2 WIRE FOR ALL LOW VOLTAGE FIELD CONNECTIONS. USE COPPER CONDUCTORS FOR UNIT SUPPLY POWER.
2. FOR 208V SUPPLY POWER, MOVE WIRES FROM THE 240V TAP TO THE 208V TAP.
3. FOR ECONOMIZER, REMOVE PLUG FROM ECONOMIZER HARNESS. CONNECT PLUG FROM ECONOMIZER TO HARNESS.

FACTORY WIRING

- HIGH VOLTAGE
- LOW VOLTAGE
- OPTIONAL HIGH VOLTAGE
- OPTIONAL LOW VOLTAGE
- CHASSIS GROUND

FIELD WIRING

- HIGH VOLTAGE
- LOW VOLTAGE
- EARTH GROUND

PCBBL216 ULN CONTROL ERROR CODES

LED ACTIVITY	DESCRIPTION	COLOR	MINIMUM LOCKOUT PERIOD [1]	LED ACTIVITY	DESCRIPTION	COLOR	MINIMUM LOCKOUT PERIOD [1]	LED ACTIVITY	DESCRIPTION	COLOR	MINIMUM LOCKOUT PERIOD [1]
LED OFF	NO 24 VAC POWER TO CONTROL	—	N/A	6 FLASHES	NORMALLY CLOSED BLOCKED BURNER SWITCH/ AUXILIARY SWITCH OPEN	RED	MAXIMUM RECOVERY TIME - 1 HOUR IF TIME EXCEEDED	2 FLASHES	ID PLUG FAILURE	AMBER	HARD LOCKOUT HEATING MODE
RED, AMBER, GREEN	POWER-UP VERIFICATION OF LED	—	N/A	7 FLASHES	GAS VALVE CIRCUIT SHORTED	RED	1 HOUR	3 FLASHES	CONTROL FUSE OPEN	AMBER	5 MINUTES
STEADY ON	CONTROL FAULT DETECTED	RED	1 HOUR OR HARD LOCKOUT	8 FLASHES	RESERVED	RED	—	STEADY ON	STANDBY NORMAL OPERATION NO THERMOSTAT REQUESTS	GREEN	N/A
1 FLASH	RETRIES EXCEEDED	RED	1 HOUR FIXED	10 FLASHES	HIGH LIMIT SWITCH RECOVERY TIMER EXPIRED	RED	1 HOUR OR HARD LOCKOUT	RAPID FLASH	CLEAR ERROR HISTORY	GREEN	N/A
2 FLASHES	PRESSURE SENSOR NULL ERROR	RED	5 MINUTES	STEADY ON	OEM FACTORY TEST MODE	AMBER	N/A	1 FLASH	CALL FOR HEATING	GREEN	N/A
3 FLASHES	PRESSURE SENSOR SPAN ERROR	RED	5 MINUTES	RAPID FLASH	FIELD TEST MODE	AMBER	N/A	2 FLASHES	CALL FOR COOLING	GREEN	N/A
4 FLASHES	HIGH LIMIT SWITCH OPEN	RED	MAXIMUM RECOVERY TIME - 1 HOUR AFTER MAX TRIPS EXCEEDED	1 FLASH	LOW FLAME SENSE	AMBER	N/A	3 FLASHES	CONTINUOUS FAN OPERATION	GREEN	N/A
5 FLASHES	FLAME PRESENT WITH GAS VALVE OFF	RED	5 MINUTES	—	—	—	—	—	—	—	—

[1] THE FAULT CONDITION MUST BE CLEARED FOR 30 SECONDS BEFORE NORMAL OPERATION CAN RESUME. A POWER CYCLE WILL ALSO RESET ANY LOCKOUT.

0140G04560-A

Wiring is subject to change. Always refer to the wiring diagram on the unit for the most up-to-date wiring.

WARNING

HIGH VOLTAGE!
DISCONNECT ALL POWER BEFORE SERVICING OR INSTALLING THIS UNIT. MULTIPLE POWER SOURCES MAY BE PRESENT. FAILURE TO DO SO MAY CAUSE PROPERTY DAMAGE, PERSONAL INJURY OR DEATH.

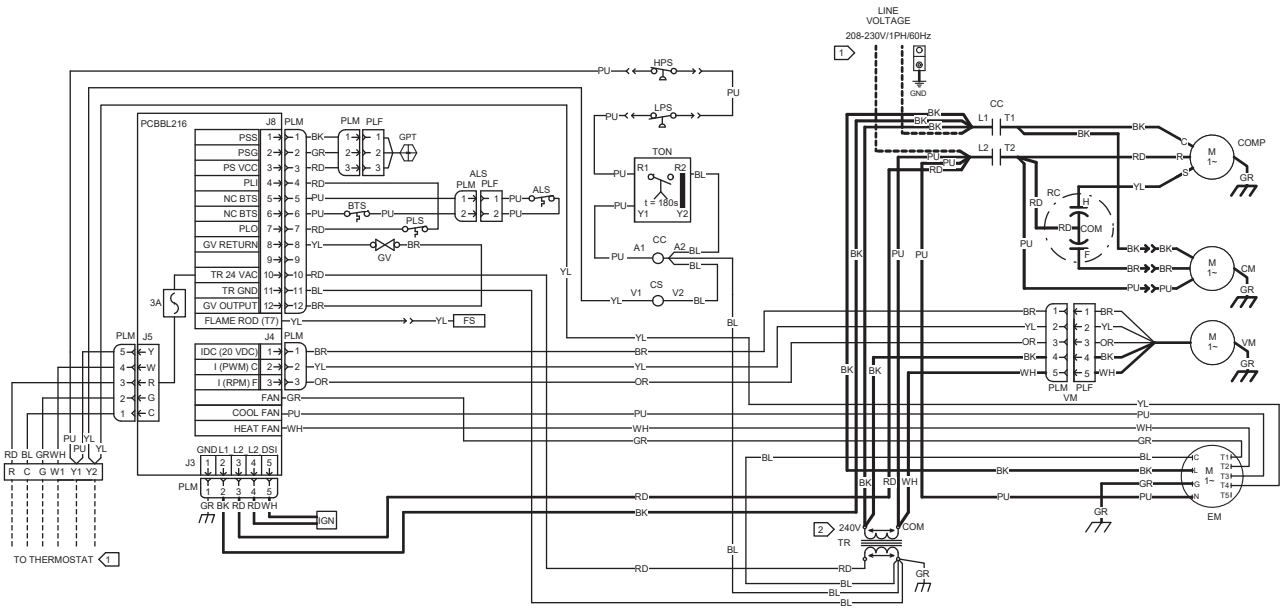

COMPONENT LEGEND

ALS	AUXILIARY LIMIT SWITCH	GV	GAS VALVE
BTS	BURNER TEMPERATURE SWITCH	HPS	HIGH PRESSURE SWITCH
CC	COMPRESSOR CONTACTOR	IGN	IGNITOR
CCH	CRANKCASE HEATER	LPS	LOW PRESSURE SWITCH
CM	CONDENSER MOTOR	PLF	FEMALE PLUG/CONNECTOR
COMP	COMPRESSOR	PLM	MALE PLUG/CONNECTOR
CS	COMP SOLENOID (2ND STG COOLING)	PLS	PRIMARY LIMIT SWITCH
EM	EVAPORATOR MOTOR	RC	RUN CAPACITOR
FPS	FREEZE PROTECTION SWITCH	TON	ON - DELAY TIMER RELAY
FS	FLAME SENSOR	TR	TRANSFORMER
GND	EQUIPMENT GROUND	VM	VENT MOTOR
GPT	GAS PRESSURE TRANSDUCER		

WIRE CODE

BK	BLACK
BL	BLUE
BR	BROWN
GR	GREEN
GY	GRAY
OR	ORANGE
PK	PINK
PU	PURPLE
RD	RED
TN	TAN
WH	WHITE
YL	YELLOW

NOTES

1. REPLACEMENT WIRE MUST BE SAME SIZE AND TYPE OF INSULATION AS ORIGINAL (AT LEAST 105° C). USE COPPER CONDUCTORS ONLY. USE N.E.C. CLASS 2 WIRE FOR ALL LOW VOLTAGE FIELD CONNECTIONS. USE COPPER CONDUCTORS FOR UNIT SUPPLY POWER.
2. FOR 208V SUPPLY POWER, MOVE WIRES FROM THE 240V TAP TO THE 208V TAP.

FACTORY WIRING

- HIGH VOLTAGE
- LOW VOLTAGE
- OPTIONAL HIGH VOLTAGE
- OPTIONAL LOW VOLTAGE
- CHASSIS GROUND

FIELD WIRING

- HIGH VOLTAGE
- LOW VOLTAGE
- EARTH GROUND

THE STATUS LIGHT ON THE FURNACE CONTROL MAY BE USED AS A GUIDE TO TROUBLESHOOTING THIS APPLIANCE. SOME MORE USEFUL STATUS LIGHT CODES ARE BELOW:

PCBBL216 ULN CONTROL ERROR CODES											
LED ACTIVIITY	DESCRIPTION	COLOR	MINIMUM LOCKOUT PERIOD[1]	LED ACTIVITY	DESCRIPTION	COLOR	MINIMUM LOCKOUT PERIOD[1]	LEED ACTIVITY	DESCRIPTION	COLOR	MINIMUM LOCKOUT PERIOD[1]
LED OFF	NO 24 VAC POWER TO CONTTROL	—	N/A	6 FLASHES	NORMALLY CLOSED BLOCK BURNER SWITCH/ AUXILIARY SWITCH OPEN	RED	MAXIMUM RECOVERY TIME - 1 HOUR IF TIME EXCEEDED	2 FLASHES	ID PLUG FAILURE	AMBER	HARD LOCKOUT HEATING MODE
RED AMBER, GREEN	POWER-UP VERIFICATION OF LED	—	N/A	7 FLASHES	GAS VALVE CIRCUIT SHORTED	RED	1 HOUR	3 FLASHES	CONTROL FUSE OPEN	AMBER	5 MINUTES
STEADY ON	CONTROL FAULT DETECTED	RED	1 HOUR OR HARD LOCKOUT	8 FLASHES	RESERVED	RED	—	STEADY ON	STANDBY NORMAL OPERATION NO THERMOSTAT REQUESTS	GREEN	N/A
1 FLASH	RETRIES EXCEED	RED	1 HOUR FIXED	10 FLASHES	HIGH LIMIT SWITCH RECOVERY TIME EXPIRED	RED	1 HOUR OR HARD LOCKOUT	RAPID FLASH	CLEAR ERROR HISTORY	GREEN	N/A
2 FLASHES	PRESSURE SENSOR NULL ERROR	RED	5 MINUTES	STEADY ON	OEM FACTORY TEST MODE	AMBER	N/A	1 FLASH	CALL FOR HEATING	GREEN	N/A
3 FLASHES	PRESSURE SENSOR SPN ERROR	RED	5 MINUTES	RAPID FLASH	FIELD TEST MODE	AMBER	N/A	2 FLASHES	CALL FOR COOLING	GREEN	N/A
4 FLASHES	HIGH LIMIT SWITCH OPEN	RED	MAXIMUM RECOVERY TIME - 1 HOUR AFTER MAX TRIPS EXCEEDED	1 FLASH	LOW FLAME SENSE	AMBER	N/A	3 FLASHES	CONTINUOUS FAN OPERATION	GREEN	N/A
5 FLASHES	FLAME PRESENT WITH GAS VALVE OFF	RED	5 MINUTES	—	—	—	—	—	—	—	—

[1] THE FAULT CONDITION MUST BE CLEARED FOR 30 SECONDS BEFORE NORMAL OPERATION CAN RESUME. A POWER CYCLE WILL ALSO RESET ANY LOCKOUT.

0140G04557-A

WARNING

HIGH VOLTAGE!
DISCONNECT ALL POWER BEFORE SERVICING OR INSTALLING THIS UNIT. MULTIPLE POWER SOURCES MAY BE PRESENT. FAILURE TO DO SO MAY CAUSE PROPERTY DAMAGE, PERSONAL INJURY OR DEATH.

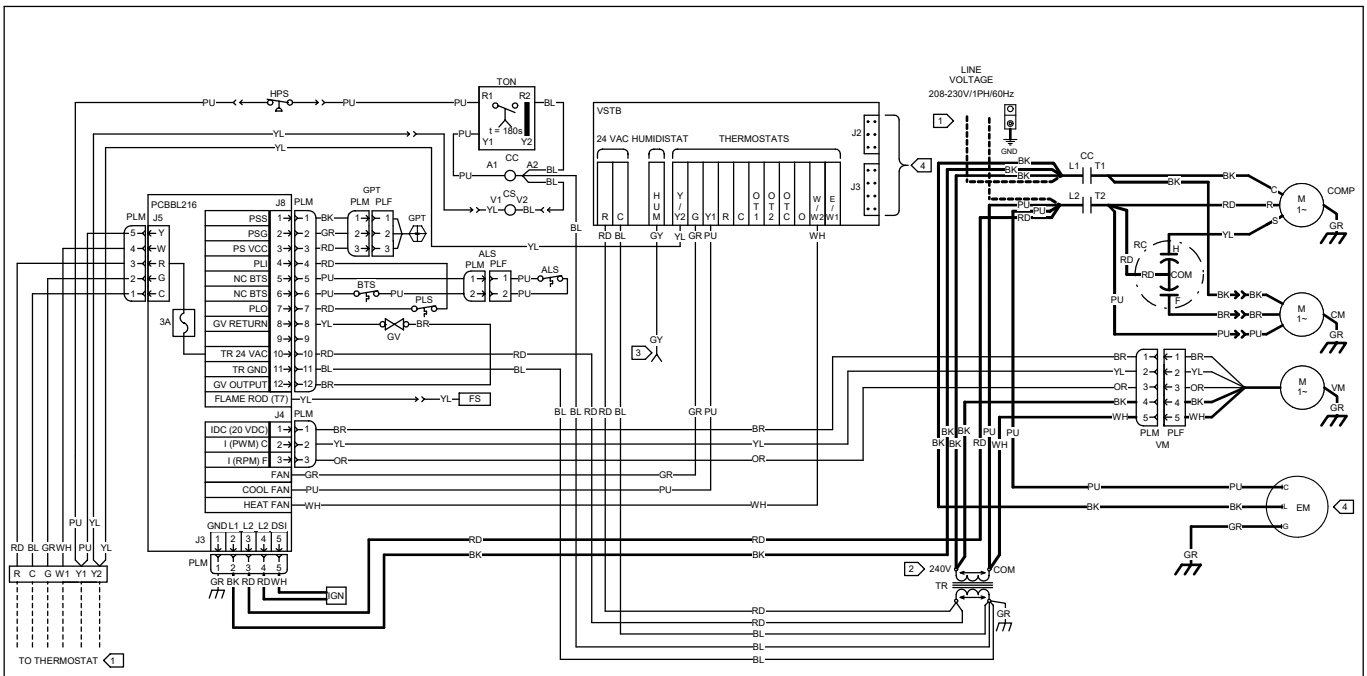

COMPONENT LEGEND

ALS	AUXILIARY LIMIT SWITCH	HPS	HIGH PRESSURE SWITCH
BTS	BURNER TEMPERATURE SWITCH	IGN	IGNITOR
CC	COMPRESSOR CONTACTOR	PLF	FEMALE PLUG/CONNECTOR
CCH	CRANKCASE HEATER	PLM	MALE PLUG/CONNECTOR
CM	CONDENSER MOTOR	PLS	PRIMARY LIMIT SWITCH
COMP	COMPRESSOR	RC	RUN CAPACITOR
CS	COMP SOLENOID (2ND STG COOLING)	TON	ON - DELAY TIMER RELAY
EM	EVAPORATOR MOTOR	TR	TRANSFORMER
FS	FLAME SENSOR	VM	VENT MOTOR
GND	EQUIPMENT GROUND	VSTB	VARIABLE SPEED TERMINAL BLOCK
GPT	GAS PRESSURE TRANSDUCER		
GV	GAS VALVE		

WIRE CODE

BK	BLACK
BL	BLUE
BR	BROWN
GR	GREEN
GY	GRAY
OR	ORANGE
PK	PINK
PU	PURPLE
RD	RED
TN	TAN
WH	WHITE
YL	YELLOW

NOTES

1. REPLACEMENT WIRE MUST BE SAME SIZE AND TYPE OF INSULATION AS ORIGINAL (AT LEAST 105° C). USE COPPER CONDUCTORS ONLY. USE N.E.C. CLASS 2 WIRE FOR ALL LOW VOLTAGE FIELD CONNECTIONS. USE COPPER CONDUCTORS FOR UNIT SUPPLY POWER.
2. FOR 208V SUPPLY POWER, MOVE WIRES FROM THE 240V TAP TO THE 208V TAP.
3. FOR DEHUMIDIFICATION, CONNECT A 24VAC DEHUMIDISTAT THAT OPENS ON HUMIDITY RISE TO GRAY WIRE FROM THE VSTB AND TO R ON IIC; SEE INSTALLATION INSTRUCTIONS FOR DETAILS. CUT 'HUM' JUMPER ON VSTB.
4. VSTB J2 & J3 WIRED TO EM LOW VOLTAGE CONTROL CONNECTIONS. SEE INSTALLATION INSTRUCTIONS FOR VSTB OPERATION DETAILS.

FACTORY WIRING

- HIGH VOLTAGE
- LOW VOLTAGE
- OPTIONAL HIGH VOLTAGE
- OPTIONAL LOW VOLTAGE
- CHASSIS GROUND

FIELD WIRING

- HIGH VOLTAGE
- LOW VOLTAGE
- EARTH GROUND

THE STATUS LIGHT ON THE FURNACE CONTROL MAY BE USED AS A GUIDE TO TROUBLESHOOTING THIS APPLIANCE. SOME MORE USEFUL STATUS LIGHT CODES ARE BELOW:

PCBBL216 ULN CONTROL ERROR CODES

LED ACTIVITY	DESCRIPTION	COLOR	MINIMUM LOCKOUT PERIOD [1]	LED ACTIVITY	DESCRIPTION	COLOR	MINIMUM LOCKOUT PERIOD [1]	LED ACTIVITY	DESCRIPTION	COLOR	MINIMUM LOCKOUT PERIOD [1]
LED OFF	NO 24 VAC POWER TO CONTROL	—	N/A	6 FLASHES	NORMALLY CLOSED BLOCKED BURNER SWITCH/ AUXILIARY SWITCH OPEN	RED	MAXIMUM RECOVERY TIME - 1 HOUR IF TIME EXCEEDED	2 FLASHES	ID PLUG FAILURE	AMBER	HARD LOCKOUT HEATING MODE
RED, AMBER, GREEN	POWER-UP VERIFICATION OF LED	—	N/A	7 FLASHES	GAS VALVE CIRCUIT SHORTED	RED	1 HOUR	3 FLASHES	CONTROL FUSE OPEN	AMBER	5 MINUTES
STEADY ON	CONTROL FAULT DETECTED	RED	1 HOUR OR HARD LOCKOUT	8 FLASHES	RESERVED	RED	—	STEADY ON	STANDBY NORMAL OPERATION NO THERMOSTAT REQUESTS	GREEN	N/A
1 FLASH	RETRIES EXCEEDED	RED	1 HOUR FIXED	10 FLASHES	HIGH LIMIT SWITCH RECOVERY TIMER EXPIRED	RED	1 HOUR OR HARD LOCKOUT	RAPID FLASH	CLEAR ERROR HISTORY	GREEN	N/A
2 FLASHES	PRESSURE SENSOR NULL ERROR	RED	5 MINUTES	STEADY ON	OEM FACTORY TEST MODE	AMBER	N/A	1 FLASH	CALL FOR HEATING	GREEN	N/A
3 FLASHES	PRESSURE SENSOR SPAN ERROR	RED	5 MINUTES	RAPID FLASH	FIELD TEST MODE	AMBER	N/A	2 FLASHES	CALL FOR COOLING	GREEN	N/A
4 FLASHES	HIGH LIMIT SWITCH OPEN	RED	MAXIMUM RECOVERY TIME - 1 HOUR AFTER MAX TRIPS EXCEEDED	1 FLASH	LOW FLAME SENSE	AMBER	N/A	3 FLASHES	CONTINUOUS FAN OPERATION	GREEN	N/A
5 FLASHES	FLAME PRESENT WITH GAS VALVE OFF	RED	5 MINUTES	—	—	—	—	—	—	—	—

[1] THE FAULT CONDITION MUST BE CLEARED FOR 30 SECONDS BEFORE NORMAL OPERATION CAN RESUME. A POWER CYCLE WILL ALSO RESET ANY LOCKOUT.

0140G04630-A

Wiring is subject to change. Always refer to the wiring diagram on the unit for the most up-to-date wiring.

MINIMUM CLEARANCES

Clearance in accordance with local installation codes, the requirements of the gas supplier and the manufacturer's installation instructions.

Dégaugement conforme aux codes d'installation locaux, aux exigences du fournisseur de gaz et aux instructions d'installation du fabricant.

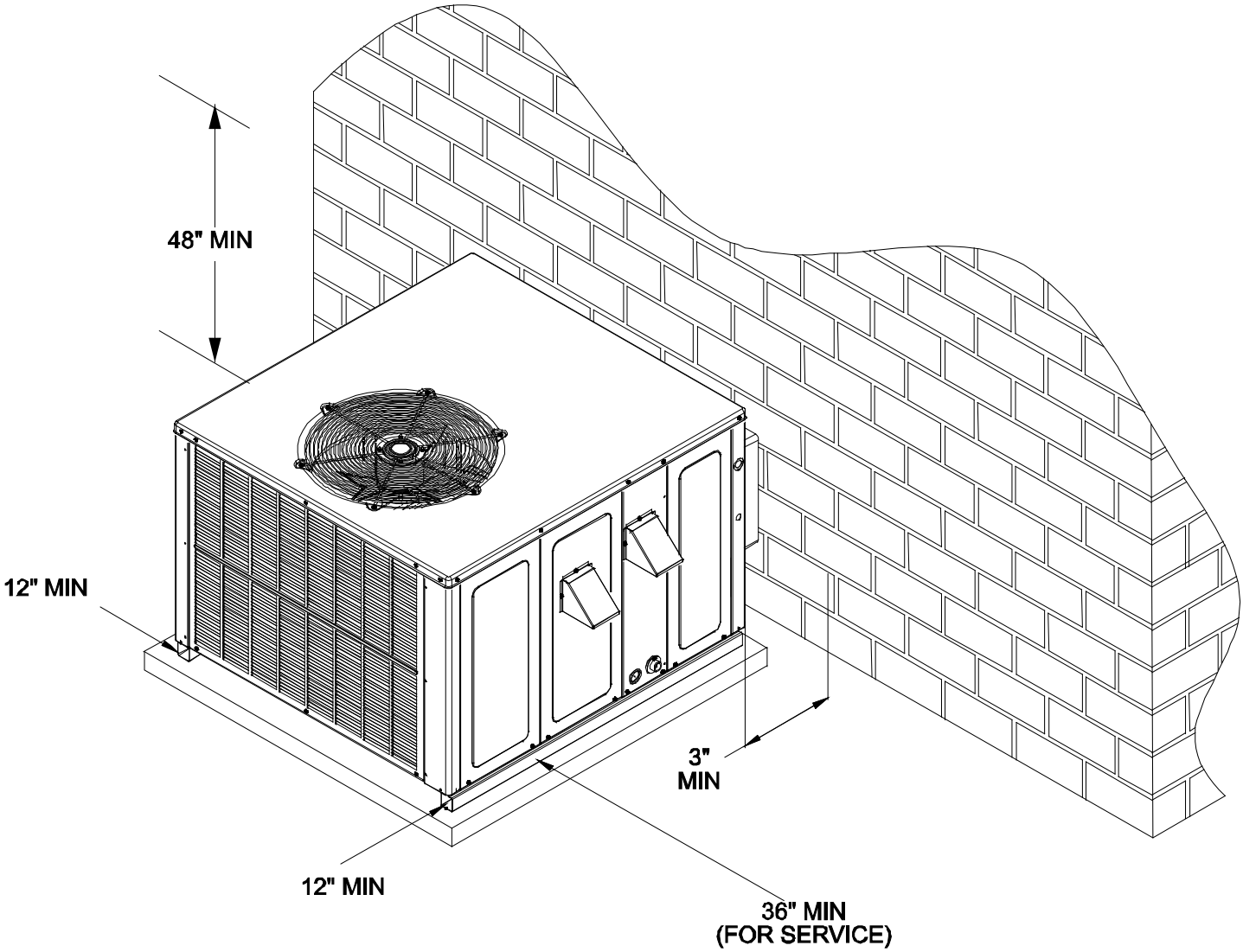

NOTE: Roof overhang should be no more than 36".

RECOMMENDED FILTER SIZES

UNIT	2 Ton	2 1/2 Ton	3 Ton	3 1/2 Ton	4 Ton
Min. Filter Size	(1) 20 x 25 x1	(1) 25 x 25 x 1	(1) 25 x 25 x 1	(2) 20 x 20 x 1	(2) 20 x 20 x 1

BLOWER PERFORMANCE DATA

DP14UM3006041** - Rise Range: 30° - 60°												
E.S.P.	T1 FAN ONLY SPEED		T2 HEATING SPEED			T3 HEATING SPEED			T4 COOLING SPEED		T5 COOLING SPEED	
	CFM	WATTS	CFM	WATTS	RISE	CFM	WATTS	RISE	CFM	WATTS	CFM	WATTS
0.1	891	113	1196	190	34	891	113	44	1107	189	1285	278
0.2	831	119	1147	197	36	831	119	46	1051	197	1238	284
0.3	780	127	1102	204	37	780	127	47	1006	207	1189	293
0.4	714	135	1054	212	38	714	135	50	963	215	1146	300
0.5	639	146	1009	221	39	639	146	54	906	218	1105	306
0.6	555	153	955	230	40	555	153	60	842	229	1058	314
0.7	502	159	897	238	41	502	159	X	773	237	1011	324
0.8	444	165	828	245	42	444	165	X	690	245	948	329

DP14UM3606041** - Rise Range: 30° - 60°												
E.S.P.	T1 FAN ONLY SPEED		T2 HEATING SPEED			T3 HEATING SPEED			T4 COOLING SPEED		T5 COOLING SPEED	
	CFM	WATTS	CFM	WATTS	RISE	CFM	WATTS	RISE	CFM	WATTS	CFM	WATTS
0.1	870	107	1216	228	31	870	107	42	1356	298	1533	408
0.2	792	118	1149	234	32	792	118	44	1296	307	1470	419
0.3	685	130	1083	246	33	685	130	48	1234	316	1416	428
0.4	623	138	1014	252	34	623	138	51	1170	327	1360	434
0.5	549	143	919	265	38	549	143	54	1104	335	1307	446
0.6	479	144	850	272	41	479	144	55	1020	347	1247	455
0.7	411	155	781	280	43	411	155	58	950	353	1177	468
0.8	343	161	717	285	44	343	161	X	879	360	1104	478

DP14UM3608043** - Rise Range: 30° - 60°												
E.S.P.	T1 FAN ONLY SPEED		T2 HEATING SPEED			T3 HEATING SPEED			T4 COOLING SPEED		T5 COOLING SPEED	
	CFM	WATTS	CFM	WATTS	RISE	CFM	WATTS	RISE	CFM	WATTS	CFM	WATTS
0.1	997	137	1399	318	41	1292	254	44	1292	254	1513	397
0.2	935	144	1340	314	42	1240	261	45	1240	261	1467	406
0.3	854	153	1290	324	44	1184	270	46	1184	270	1422	417
0.4	795	159	1239	333	46	1123	279	48	1123	279	1373	425
0.5	728	171	1167	339	48	1063	285	51	1063	285	1318	434
0.6	658	174	1105	350	49	1004	295	53	1004	295	1262	443
0.7	591	179	1051	355	50	950	302	55	950	302	1204	451
0.8	532	184	1009	363	52	878	310	58	878	310	1160	460

DP14UM4808041/43** - Rise Range: 30° - 60°												
E.S.P.	T1 FAN ONLY SPEED		T2 HEATING SPEED			T3 HEATING SPEED			T4 COOLING SPEED		T5 COOLING SPEED	
	CFM	WATTS	CFM	WATTS	RISE	CFM	WATTS	RISE	CFM	WATTS	CFM	WATTS
0.1	1090	146	1363	249	40	1304	221	43	1757	487	1928	626
0.2	1024	156	1305	256	42	1242	230	45	1709	502	1874	639
0.3	960	165	1247	269	45	1185	241	46	1662	510	1836	647
0.4	867	173	1189	276	46	1126	249	49	1610	519	1780	658
0.5	791	183	1130	285	48	1054	258	52	1557	532	1735	671
0.6	710	191	1048	294	50	967	270	54	1506	540	1683	677
0.7	644	196	966	305	52	899	278	56	1451	550	1629	686
0.8	587	206	901	315	54	832	285	59	1397	556	1578	693

X = Not recommended for heat application

NOTE: *The shaded area indicates ranges in excess of maximum external static pressure allowable when heating. For satisfactory operation, external static pressure should not exceed 0.8" w.c.*

BLOWER PERFORMANCE DATA

DP14UM2404041** - Rise Range 20° - 50°												
E.s.p.	T1 FAN ONLY SPEED		T2 HEATING SPEED			T3 HEATING SPEED			T4 COOLING SPEED		T5 COOLING SPEED	
	CFM	WATTS	CFM	WATTS	RISE	CFM	WATTS	RISE	CFM	WATTS	CFM	WATTS
0.1	600	50	968	132	30	733	65	34	891	109	1156	201
0.2	542	57	914	139	31	703	74	36	845	116	1110	211
0.3	494	67	868	148	33	664	83	38	794	127	1063	220
0.4	423	73	819	157	35	602	91	41	741	133	1015	228
0.5	339	78	768	165	36	536	98	44	694	141	971	235
0.6	284	85	723	175	38	483	105	49	634	149	923	241
0.7	217	91	661	177	40	430	111	x	567	157	881	251
0.8	160	96	590	186	43	381	119	x	506	162	832	259

DP14UM4208041**- Rise Range: 30° - 60°												
E.S.P.	T1 FAN ONLY SPEED		T2 HEATING SPEED			T3 HEATING SPEED			T4 COOLING SPEED		T5 COOLING SPEED	
	CFM	WATTS	CFM	WATTS	RISE	CFM	WATTS	RISE	CFM	WATTS	CFM	WATTS
0.1	1090	146	1363	249	40	1304	221	43	1487	317	1637	444
0.2	1024	156	1305	256	42	1242	230	45	1433	327	1593	454
0.3	960	165	1247	269	45	1185	241	46	1378	338	1541	459
0.4	867	173	1189	276	46	1126	249	49	1323	345	1497	473
0.5	791	183	1130	285	48	1054	258	52	1265	356	1450	478
0.6	710	191	1048	294	50	967	270	54	1196	365	1407	485
0.7	644	196	966	305	52	899	278	56	1124	376	1357	493
0.8	587	206	901	315	54	832	285	59	1063	384	1304	502

DP14UM6108041** - Rise Range: 30° - 60°											
E.s.p.	T1 FAN ONLY SPEED		T2 HEATING SPEED			T3 LOW STAGE COOLING		T4 HIGH STAGE		T5 COOLING SPEED	
	CFM	WATTS	CFM	WATTS	RISE	CFM	WATTS	CFM	WATTS	CFM	WATTS
0.1	1156	158	1283	200	42	1283	200	1835	499	1975	602
0.2	1077	163	1224	210	44	1224	210	1787	498	1928	616
0.3	1015	172	1152	216	46	1152	216	1735	517	1877	622
0.4	930	179	1098	228	49	1098	228	1681	525	1837	644
0.5	839	193	1025	236	51	1025	236	1638	537	1782	649
0.6	759	200	945	249	53	945	249	1587	551	1738	660
0.7	697	206	867	264	56	867	264	1544	558	1689	664
0.8	632	216	806	271	61	806	271	1495	572	1634	676

X = Not recommended for heat application

NOTE: *The shaded area indicates ranges in excess of maximum external static pressure allowable when heating. For satisfactory operation, external static pressure should not exceed 0.8" w.c.*

BLOWER PERFORMANCE DATA

DP14UM6108043** - Rise Range: 30° - 60°											
E.S.P.	T1 FAN ONLY SPEED		T2 HEATING SPEED			T3 LOW STAGE COOLING SPEED		T4 HIGH STAGE COOLING SPEED		T5 COOLING SPEED	
	CFM	WATTS	CFM	WATTS	RISE	CFM	WATTS	CFM	WATTS	CFM	WATTS
0.1	1156	158	1283	200	42	1283	200	1835	499	1975	602
0.2	1077	163	1224	210	44	1224	210	1787	498	1928	616
0.3	1015	172	1152	216	46	1152	216	1735	517	1877	622
0.4	930	179	1098	228	49	1098	228	1681	525	1837	644
0.5	839	193	1025	236	51	1025	236	1638	537	1782	649
0.6	759	200	945	249	53	945	249	1587	551	1738	660
0.7	697	206	867	264	56	867	264	1544	558	1689	664
0.8	632	216	806	271	61	806	271	1495	572	1634	676

DP16UM3008041** - Rise Range: 30° - 60°				
Tap	Low Cool	High Cool	Heating	
			CFM	Rise
A-	545	810	985	51
A	605	900	1095	48
A+	665	990	1205	46
B-	605	900	1050	49
B	670	1000	1170	45
B+	735	1100	1285	42
C-	650	970	925	53
C	720	1075	1025	50
C+	795	1185	1130	47
D-	665	990	X	X
D	735	1100	X	X
D+	810	1210	X	X

DP16UM3608041** - Rise Range: 35° - 65°				
Tap	Low Cool	High Cool	Heating	
			CFM	Rise
A-	680	1015	985	52
A	755	1125	1095	48
A+	830	1240	1205	44
B-	725	1080	925	52
B	805	1200	1025	50
B+	885	1320	1130	47
C-	755	1125	1050	49
C	840	1250	1170	46
C+	920	1375	1285	42
D-	800	1195	x	x
D	890	1325	x	x
D+	980	1460	x	x

X = Not recommended for heat application

NOTE: *The shaded area indicates ranges in excess of maximum external static pressure allowable when heating. For satisfactory operation, external static pressure should not exceed 0.8" w.c.*

CFM OUTPUT AND DIP SWITCH SETTINGS

DP16UM CFM OUTPUT AND DIP SWITCH SETTINGS**

		CFM Output for DIP Switches 1-2/Heating			CFM Output for DIP Switches 5-6/Cooling			
MODEL	**SPEED TAP**	**SWITCH 1**	**SWITCH 2**	**HEAT CFM**	**SWITCH 5**	**SWITCH 6**	**LOW COOL**	**HIGH COOL**
DP16UM3008041**	**A**	Off	Off	1095	Off	Off	605	900
	B	On	Off	1170	On	Off	670	1000
	C	Off	On	1025	Off	On	720	1075
	D	On	On	X	On	On	735	1100
DP16UM3608041**	**A**	Off	Off	1095	Off	Off	755	1125
	B	On	Off	1025	On	Off	805	1200
	C	Off	On	1170	Off	On	840	1250
	D	On	On	X	On	On	890	1325

X = Not recommended for heating application

DIP Switch Settings for Single and Two-Stage Thermostats

MODEL	SWITCH 3	SWITCH 4	THERMOSTAT
DPU16M**	N/A	ON	SINGLE STAGE
	N/A	OFF	TWO-STAGE

Adjustments Through DIP Switch Combinations 7-8

CFM	SWITCH 7	SWITCH 8
+10	On	Off
Normal	Off	Off
-10	Off	On

HOMEOWNER'S ROUTINE MAINTENANCE RECOMMENDATIONS

PACKAGE UNITS - DUAL FUEL & GAS
HOMEOWNER'S ROUTINE MAINTENANCE RECOMMENDATIONS

We strongly recommend a bi-annual maintenance checkup be performed by a qualified service agency before the heating and cooling seasons begin.

WARNING

HIGH VOLTAGE
DISCONNECT ALL POWER BEFORE SERVICING OR INSTALLING THIS UNIT. MULTIPLE POWER SOURCES MAY BE PRESENT. FAILURE TO DO SO MAY CAUSE PROPERTY DAMAGE, PERSONAL INJURY OR DEATH.

REPLACE OR CLEAN FILTER

IMPORTANT NOTE: NEVER OPERATE UNIT WITHOUT A FILTER INSTALLED AS DUST AND LINT WILL BUILD UP ON INTERNAL PARTS RESULTING IN LOSS OF EFFICIENCY, EQUIPMENT DAMAGE AND POSSIBLE FIRE.

A return air filter is not supplied with this unit; however, there must be a means of filtering the return air. An indoor air filter must be used with your comfort system. A properly maintained filter will keep the indoor coil of your comfort system clean. A dirty coil could cause poor operation and/or severe equipment damage.

The installer of your unit can tell you where your filter(s) are and how to clean or replace them.

Check your return filter(s) at least once every two months. When they are dirty, replace or clean as required. Disposable type filters should be replaced. Reusable type filters may be cleaned.

NOTE: REUSABLE TYPE FILTERS SHOULD BE WASHED WITH WARM WATER, DRIED COMPLETELY AND SPRAYED WITH AN ADHESIVE ACCORDING TO THE MANUFACTURERS RECOMMENDATIONS.

You may want to ask your dealer about high efficiency filters. High efficiency filters are available in both electronic and non-electronic types. These filters can do a better job of catching small airborne particles.

Improper filter maintenance is the most common cause of inadequate heating or cooling performance. Filters should be cleaned (permanent) or replaced (disposable) every two months or as required. When replacing a filter, it must be replaced with a filter of the same type and size and always make certain the air flow arrows on the filter point in the proper direction.

CONDENSER, EVAPORATOR AND INDUCED DRAFT MOTORS

The bearings on the air circulating blower motor, condenser motor and the combustion fan motor are permanently lubricated and require no further lubrication.

COMPRESSOR

The compressor motor is hermetically sealed and does not require additional oiling.

ANNUAL INSPECTION (QUALIFIED SERVICER ONLY)

Your package unit should be inspected by a qualified installer, or service agency at least twice every year. This check should be performed before the heating and cooling seasons begin. This will ensure that adequate combustion air is being drawn and the vent system is working properly. Particular attention should be paid to the following items. Repair as necessary.

- Check physical support of the unit. Ensure it is sound without any sagging, cracks, or gaps, around the base.
- Check for obvious signs of deterioration of the unit.
- Flue Hood and Combustion Air Inlet. Check for blockage (wasp nest, etc.) and corrosion.
- Flue Hood (Qualified Servicer Only)
- Return Air Connection. Check for physical soundness and ensure that the connection is firmly sealed to the package unit casing.
- Heat exchanger. Check for corrosion and/or obstructions within the heat exchanger passageways.
- Burners. Check for proper ignition, burner flame, and flame sense.
- Wiring. Check wires for damage. Check electrical connections for tightness and/or corrosion.
- Filters. Check that filters are clean and in the proper placement in the unit or duct system.
- Louvers. Inspect air inlet louvers inside the heat exchanger compartments. Ensure the area is clean and free of dirt and debris.

CLEAN OUTSIDE COIL (QUALIFIED SERVICER ONLY)

The outdoor coil should be inspected annually. It is important to keep the outdoor coil clean. Dirt, leaves, or debris could restrict the airflow. If cleaning of the outdoor coil becomes necessary, hire a qualified servicer. Inexperienced people could easily puncture the tubing in the coil.

BEFORE CALLING YOUR SERVICER

- Check the thermostat to confirm that it is properly set.
- Check the disconnect switch near the unit to confirm that it is closed.
- Check the electrical panel for tripped circuit breakers or failed fuses. Reset the circuit breakers or replace fuses as necessary.
- Check for blockage of the indoor air inlets and outlets. Confirm that they are open and have not been blocked by objects (rugs, curtains or furniture).
- Check for obstructions on the unit. Confirm that it has not been covered on the sides or the top. Remove any obstruction that can be safely removed. If the unit is covered with dirt or debris, call a qualified servicer to clean it.
- Check the filter. If it is dirty, clean or replace it.

START-UP CHECKLIST

Residential Package - (Indoor Section)					
		Model Number			
		Serial Number			
ELECTRICAL					
Line Voltage (Measure L1 and L2 Voltage)	L1 - L2				
Secondary Voltage (Measure Transformer Output Voltage)	R - C				
Blower Amps					
Heat Strip 1 - Amps					
Heat Strip 2 - Amps					
BLOWER EXTERNAL STATIC PRESSURE					
Return Air Static Pressure			IN. W.C.		
Supply Air Static Pressure			IN. W.C.		
Total External Static Pressure (Ignoring +/- from the reading above, add total here)			IN. W.C.		
TEMPERATURES					
Return Air Temperature (Dry bulb / Wet bulb)			DB °F		WB °F
Cooling Supply Air Temperature (Dry bulb / Wet bulb)			DB °F		WB °F
Heating Supply Air Temperature			DB °F		
Temperature Rise			DB °F		
Delta T (Difference between Supply and Return Temperatures)			DB °F		
GAS PRESSURES					
Gas Inlet Pressure			IN. W.C.		
Gas Manifold Pressure (Low Fire)			IN. W.C.		
Gas Manifold Pressure (High Fire)			IN. W.C.		
Gas Type (NG) = Natural Gas / (LP) = Liquid Propane					
Residential Package - (Outdoor Section)					
ELECTRICAL					
Supply Voltage (Measure L1 and L2 Voltage)	L1 - L2				
Compressor Amps					
Condenser Fan Amps					
PRESSURES / TEMPERATURES					
Suction Circuit (Pressure / Suction Line Temperature)	PSIG		TEMP		°F
Liquid Circuit (Pressure / Liquid Temperature)	PSIG		TEMP		°F
Outdoor Air Temperature (Dry bulb / Wet bulb)			DB °F		WB °F
SUPERHEAT / SUBCOOLING	SH		SC		
Additional Checks					
Check wire routings for any rubbing					
Check product for proper draining					
Check for kinked pressure switch tubing.					
Check flue elbow for alignment and clamp tightness.					
Check screw tightness on blower wheel.					
Check factory wiring and wire connections.					
Check screw tightness on Outdoor Motor and Blade					
Check product for proper clearances as noted by installtion instructions					
°F to °C formula: (°F - 32) divided by 1.8 = °C	**°C to °F formula: (°C multiplied by 1.8) + 32 = °F**				

THIS PAGE IS LEFT INTENTIONALLY BLANK.

THIS PAGE IS LEFT INTENTIONALLY BLANK.

CUSTOMER FEEDBACK
Daikin is very interested in all product comments.
Please fill out the feedback form on the following link:
https://daikincomfort.com/contact-us
You can also scan the QR code on the right to be directed to the feedback page.

Our continuing commitment to quality products may mean a change in specifications without notice.
© 2020-2021, 2023 ***DAIKIN COMFORT TECHNOLOGIES MANUFACTURING, L.P.***
19001 Kermier Rd., Waller, TX 77484
www.daikincomfort.com