Installation Instructions for DR80TC & DD80TC Gas Furnace CATEGORY I CATÉGORIE I

These furnaces comply with requirements embodied in the American National Standard / National Standard of Canada ANSI Z21.47·CSA-2.3 Gas Fired Central Furnaces.

Installer:
Affix all manuals adjacent to the unit.

The precautions listed in this Installation Manual are intended as supplemental to existing practices. However, if there is a direct conflict between existing practices and the content of this manual, the precautions listed herein take precedence.

RECOGNIZE THIS SYMBOL AS A SAFETY PRECAUTION.

***NOTE:** Please contact your distributor or our website for the applicable Specification Sheet referred to in this manual.

WARNING

Do not bypass safety devices.

WARNING

THIS FURNACE MAY BE PAIRED WITH A COOLING UNIT THAT USES R-32 REFRIGERANT. IF THE REFRIGERATION UNIT PAIRED WITH THIS FURNACE DOES NOT USE R-32, THE R-32 FUNCTION IN THE FURNACE CONTROL BOARD NEEDS TO BE TURNED OFF. PLEASE SEE THE ELECTRICAL AND THE R-32 SECTIONS FOR MORE DETIALS. REFRIGERANT SYSTEMS OTHER THAN 410A OR R32 MAY REQUIRE AN ADDITIONAL MITIGATION CONTROL BOARD. REFER TO THE INSTALLATION MANUAL OF THE INDOOR EVAPORATOR COIL TO DETERMIND INSTALLATION REQUIREMENTS FOR THAT SUPPLIER'S REFRIGERANT DETECTION SYSTEM.

WARNING

Only personnel that have been trained to install, adjust, service, maintenance or repair (hereinafter, "service") the equipment specified in this manual should service the equipment.

This equipment is not intended for use by persons (including children) with reduced physical, sensory or mental capacities, or lack of experience and knowledge, unless they have been given supervision or instruction concerning use of the appliance by a person responsible for their safety.

Children should be supervised to ensure that they do not play with the equipment.

The manufacturer will not be responsible for any injury or property damage arising from improper supervision, service or service procedures. If you service this unit, you assume responsibility for any injury or property damage which may result. In addition, in jurisdictions that require one or more licenses to service the equipment specified in this manual, only licensed personnel should service the equipment. Improper supervision, installation, adjustment, servicing, maintenance or repair of the equipment specified in this manual, or attempting to install, adjust, service or repair the equipment specified in this manual without proper supervision or training may result in product damage, property damage, personal injury or death.

80% HEX

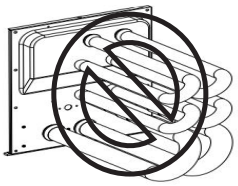

DO NOT LIFT PRODUCT USING HEAT EXCHANGER

This device, which was assembled by Daikin Comfort Technologies Manufacturing, L.P., contains a component that is classified as an intentional radiator. This intentional radiator has been certified by the FCC: FCC ID QOQBGM111. And this international radiator has an Industry Canada ID: IC 5123A-BGM111.

This device complies with Part 15 of the FCC's Rules. Operation of this device is subject to two conditions:

(1) This device may not cause harmful interference; and
(2) This device must accept any interference received, including interference that may cause undesirable operation.

And this device meets the applicable Industry Canada technical specifications.

The manufacturer of the intentional radiator (model no. BGM111) is Silicon Laboratories Finland Oy, which can be contacted by calling 617-951-0200. (www.silabs.com)

Daikin Comfort Technologies Manufacturing, L.P. may be contacted by calling 713-861-2500, or at 19001 Kermier Rd., Waller TX 77484. (www.goodmanmfg.com)

Our continuing commitment to quality products may mean a change in specifications without notice.

©2024 ***DAIKIN COMFORT TECHNOLOGIES MANUFACTURING, L.P.***
19001 Kermier Rd., Waller, TX 77484
www.daikincomfort.com

IOD-2043
03/2024

TABLE OF CONTENTS

Safety Considerations 2
Product Application 4
Location Requirements & Considerations 5
Combustion & Ventilation Air Requirements 9
Masonry Chimneys 10
Electrical Connections 10
Gas Supply and Piping 11
Circulating Air 14
Accessories 21
Start-Up Procedure and Adjustment 23
R-32 Information 25
Normal Sequence of Operation 26
Operational Checks 27
Safety Circuit Description 27
Troubleshooting 28
Maintenance 29
Filters 29
Before Leaving an Installation 29
Repair and Replacement Parts 30
Menu Options 31
Status Codes 32
Troubleshooting Chart 33
Wiring Diagram 38
Start-up Checklist 39

SAFETY CONSIDERATIONS

Adhere to the following warnings and cautions when installing, adjusting, altering, servicing, or operating the furnace. To ensure proper installation and operation, thoroughly read this manual for specifics pertaining to the installation and application of this product.

WARNING

FIRE OR EXPLOSION HAZARD

Failure to follow the safety warnings exactly could result in serious injury, death or property damage.

Never test for gas leaks with an open flame. Use a commercially available soap solution made specifically for the detection of leaks to check all connections. A fire or explosion may result causing property damage, personal injury or loss of life.

AVERTISSEMENT

RISQUE D'INCENDIE OU D'EXPLOSION

Si les consignes de sécurité ne sont pas suivies à la lettre, cela peut entraîner la mort, de graves blessures ou des dommages matériels.

Ne jamais vérifier la présence de fuites de gaz au moyen d'une flamme nue. Vérifier tous les raccords en utilisant une solution savonneuse commerciale conçue spécialement pour la détection de fuites. Un incendie ou une explosion risque de se produire, ce qui peut entraîner la mort, des blessures ou des dommages matériels.

This furnace is manufactured for use with natural gas. It may be field converted to operate on L.P. gas by using the appropriate L.P. conversion kit listed in the **PROPANE GAS/HIGH ALTITUDE INSTALLATIONS section** of this manual.

Install this furnace only in a location and position as specified in **LOCATION REQUIREMENTS & CONSIDERATIONS section and INSTALLATION POSITIONS section** of this manual.

Provide adequate combustion and ventilation air to the furnace as specified in **COMBUSTION & VENTILATION AIR REQUIREMENTS section of this manual.**

Combustion products must be discharged to the outdoors. Connect this furnace to an approved vent system only, as specified in **Category 1 Venting** section of this manual.

Never test for gas leaks with an open flame. Use a commercially available soap solution made specifically for the detection of leaks to check all connections, as specified in **GAS SUPPLY AND PIPING** section of this manual.

Always install a furnace to operate within the furnace's intended temperature-rise range with a duct system which has external static pressure within the allowable range, as specified on the furnace rating plate and **OPERATIONAL CHECKS section** of these instructions.

When furnace duct(s) supply air outside the space containing the furnace, a return air duct must terminate in the same space as the supply duct and be sealed to the furnace casing.

A gas-fired furnace for installation in a residential garage must be installed as specified in the **LOCATION REQUIREMENTS AND CONSIDERATIONS section** of this manual.

This furnace may be used as a construction site heater only if certain conditions are met. These conditions are listed in the **PRODUCT APPLICATION section** of this manual.

WARNING

To prevent personal injury or death due to improper installation, adjustment, alteration, service or maintenance, refer to this manual. For additional assistance or information, consult a qualified installer, servicer agency or the gas supplier.

WARNING

To prevent possible property damage, personal injury or death due to electrical shock, the furnace must be located to protect the electrical components from water.

DANGER

CARBON MONOXIDE POISONING HAZARD

Special Warning for Installation of Furnace or Air Handling Units in Enclosed Areas such as Garages, Utility Rooms or Parking Areas

Carbon monoxide producing devices (such as an automobile, space heater, gas water heater, etc.) should not be operated in enclosed areas such as unventilated garages, utility rooms or parking areas because of the danger of carbon monoxide (CO) poisoning resulting from the exhaust emissions. If a furnace or air handler is installed in an enclosed area such as a garage, utility room or parking area and a carbon monoxide producing device is operated therein, there must be adequate, direct outside ventilation.

This ventilation is necessary to avoid the danger of CO poisoning which can occur if a carbon monoxide producing device continues to operate in the enclosed area. Carbon monoxide emissions can be (re)circulated throughout the structure if the furnace or air handler is operating in any mode.

CO can cause serious illness including permanent brain damage or death. B10259-216

DANGER
PELIGRO

RIESGO DE INTOXICACIÓN POR MONÓXIDO DE CARBONO

Advertencia especial para la instalación de calentadores ó manejadoras de aire en áreas cerradas como estacionamientos ó cuartos de servicio.

Los equipos ó aparatos que producen monóxido de carbono (tal como automóvil, calentador de gas, calentador de agua por medio de gas, etc) no deben ser operados en áreas cerradas debido al riesgo de envenenamiento por monóxido de carbono (CO) que resulta de las emisiones de gases de combustión. Si el equipo ó aparato se opera en dichas áreas, debe existir una adecuada ventilación directa al exterior.

Esta ventilación es necesaria para evitar el peligro de envenenamiento por CO, que puede ocurrir si un dispositivo que produce monóxido de carbono sigue operando en el lugar cerrado.

Las emisiones de monóxido de carbono pueden circular a través del aparato cuando se opera en cualquier modo.

El monóxido de carbono puede causar enfermedades severas como daño cerebral permanente ó muerte. B10259-216

DANGER

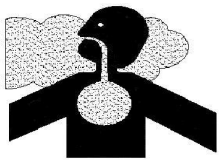

RISQUE D'EMPOISONNEMENT AU MONOXYDE DE CARBONE

Advertencia especial para la instalación de calentadores ó manejadoras de aire en áreas cerradas como estacionamientos ó cuartos de servicio.

Avertissement special au sujet de l'installation d'appareils de hauffage ou de traitement d'air dans des endroits clos, tets les garages, les locaux d'entretien et les stationnements. Evitez de mettre en marche les appareils produisant du monoxyde de carbone (tels que les automobile, les appareils de chauffage autonome,etc.) dans des endroits non ventilés tels que les d'empoisonnement au monoxyde de carbone. Si vous devez faire fonctionner ces appareils dans un endroit clos, assures-vous qu'il y ait une ventilation directe provenant de l'exterier.

Cette ventilation est nécessaire pour éviter le danger d'intoxication au CO pouvant survenir si un appareil produisant du monoxyde de carbone continue de fonctionner au sein de la zone confinée.

Les émissions de monoxyde de carbone peuvent etre recircules dans les endroits clos, si l'appareil de chauffage ou de traitement d'air sont en marche.

Le monoxyde de carbone peut causer des maladies graves telles que des dommages permanents au cerveau et meme la mort. B10259-216

WARNING

Should overheating occur or the gas supply fail to shut off, turn off the manual gas shutoff valve external to the furnace before turning off the electrical supply.

WARNING

If the information in these instructions is not followed exactly, a fire or explosion may result causing property damage, personal injury or loss of life.
- do not store or use gasoline or other flammable vapors and liquids in the vicinity of this or any other appliance.
- WHAT TO DO IF YOU SMELL GAS:
- **Do not try to light any appliance.**
- **Do not touch any electrical switch; do not use any phone in your building.**
- **Immediately call your gas supplier from a neighbor's phone. Follow the gas supplier's instructions. If you cannot reach your gas supplier, call the fire department.**

- Installation and service must be performed by a qualified installer, service agency or the gas supplier.

WARNING

Heating unit should not be utilized without reasonable, routine, inspection, maintenance and supervision. If the building in which any such device is located will be vacant, care should be taken that such device is routinely inspected, maintained and monitored. In the event that the building maybe exposed to freezing temperatures and will be vacant, all water-bearing pipes should be drained, the building should be properly winterized, and the water source closed. In the event that the building may be exposed to freezing temperatures and will be vacant, any hydronic coil units should be drained as well and, in such case, alternative heat sources should be utilized.

WARNING

Possible property damage, personal injury or death due to fire, explosion, smoke, soot, condensation, electrical shock or carbon monoxide may result from improper installation, repair operation, or maintenance of this product.

WARNING

To prevent personal injury or death due to improper installation, adjustment, alteration, service, or maintenance, refer to this manual. For additional assistance or information, consult a qualified installer, servicer, agency or the gas supplier.

WARNING

To prevent personal injury or death due to asphyxiation, this furnace must be Category I vented. Do not vent using Category III venting. Provisions must be made for proper venting system. The length of flue pipe could be a limiting factor in locating the furnace.

Additional Safety Considerations

- This furnace is approved for Category I Venting only.
- Provisions must be made for venting combustion products outdoors through a proper venting system. The length of flue pipe could be a limiting factor in locating the furnace.

Shipping Inspection

All units are securely packed in shipping containers tested according to International Safe Transit Association specifications. The carton must be checked upon arrival for external damage. If damage is found, a request for inspection by carrier's agent must be made in writing immediately.

The furnace must be carefully inspected on arrival for damage and bolts or screws which may have come loose in transit. In the event of damage the consignee should:

1. Make a notation on delivery receipt of any visible damage to shipment or container.
2. Notify carrier promptly and request an inspection.
3. With concealed damage, carrier must be notified as soon as possible - preferably within five days.
4. File the claim with the following support documents within a nine month statute of limitations.
   - Original or certified copy of the Bill of Lading, or indemnity bond.
   - Original paid freight bill or indemnity in lieu thereof.
   - Original or certified copy of the invoice, showing trade and other discounts or reductions.
   - Copy of the inspection report issued by carrier's representative at the time damage is reported to carrier.

The carrier is responsible for making prompt inspection of damage and for a thorough investigation of each claim. The distributor or manufacturer will not accept claims from dealers for transportation damage.

Keep this literature in a safe place for future reference.

Electrostatic Discharge (ESD) Precautions

NOTE: Discharge body's static electricity before touching unit. An electrostatic discharge can adversely affect electrical components.

Use the following precautions during furnace installation and servicing to protect the integrated control module from damage. By putting the furnace, the control, and the person at the same electrostatic potential, these steps will help avoid exposing the integrated control module to electrostatic discharge. This procedure is applicable to both installed and non-installed (ungrounded) furnaces.

1. Disconnect all power to the furnace. Do not touch the integrated control module or any wire connected to the control prior to discharging your body's electrostatic charge to ground.
2. Firmly touch a clean, unpainted, metal surface of the furnaces near the control. Any tools held in a person's hand during grounding will be discharged.
3. Service integrated control module or connecting wiring following the discharge process in step 2. Use caution not to recharge your body with static electricity (i.e., do not move or shuffle your feet, do not touch ungrounded objects, etc.). If you come in contact with an ungrounded object, repeat step 2 before touching control or wires.
4. Discharge your body to ground before removing a new control from its container. Follow steps 1 through 3 if installing the control on a furnace. Return any old or new controls to their containers before touching any ungrounded object.

To The Installer

Before installing this unit, please read this manual thoroughly to familiarize yourself with specific items which must be adhered to, including but not limited to: unit maximum external static pressure, gas pressures, BTU input rating, proper electrical connections, circulating air temperature rise, minimum or maximum CFM, and motor speed connections, and venting. These furnaces are designed for Category I venting only.

WARNING

To prevent property damage, personal injury or death due to fire, do not install the furnace in a mobile home, trailer, or recreational vehicle.

NOTE: This unit should be installed in a manner so that it is not accessible to the public.

PRODUCT APPLICATION

This furnace is primarily designed for residential home-heating applications. It is not designed or certified for use in mobile homes, trailers or recreational vehicles. Neither is it designed or certified for outdoor applications. The furnace must be installed indoors (i.e., attic space, crawl space, or garage area provided the garage area is enclosed with an operating door).

VALID EQUIPMENT COMBINATIONS

Furnace Alone ---
Furnace + 1 Stage Non-Communicating A/C
Furnace + 2 Stage Non-Communicating A/C
Furnace + 1 Stage Non-Communicating H/P
Furnace + 2 Stage Non-Communicating H/P
Furnace + Communicating A/C
Furnace + Communicating H/P
Furnace + Communicating A/C Inverter
Furnace + Communicating H/P Inverter

This furnace can be used in the following non-industrial commercial applications:

Schools, Office buildings, Churches, Retail stores, nursing homes, Hotels/motels, Common or office areas

In such applications, the furnace must be installed with the following stipulations:

- It must be installed per the installation instructions provided and per local and national codes.
- It must be installed indoors in a building constructed on site.
- It must be part of a ducted system and not used in a free air delivery application.
- It must not be used as a "make-up" air unit.
- All other warranty exclusions and restrictions apply.

This furnace may be used as a construction site heater **ONLY** if all of the following conditions are met:

- The vent system is permanently installed per these installation instructions.
- A room thermostat is used to control the furnace. Fixed jumpers that provide continuous heating CANNOT be used and can cause long term equipment damage. Bi-metal thermostats, or any thermostat affected by vibration must not be used during construction.
- Return air ducts are provided and sealed to the furnace.
- A return air temperature range between 60ºF (16ºC) and 80ºF (27ºC) is maintained.
- Air filters are installed in the system and replaced daily during construction and upon completion of construction.
- The input rate and temperature rise are set per the furnace rating plate.
- 100% outside air must be used for combustion during construction. Temporary ducting may be used to supply outside air to the furnace for combustion – do not connect this duct directly to the furnace. Size this duct according to NFPA 54/ANSI Z223.1 section for Combustion and Ventilation Air.
- The furnace heat exchanger, components, duct system, air filters and evaporator coils are thoroughly cleaned following final construction clean up by a qualified person.
- All furnace operating conditions (including ignition, input rate, temperature rise and venting) are verified by a qualified person according to these installation instructions.
- Furnace doors must be in place on the furnace while the furnace is operating in any mode.
- Damage or repairs due to failure to comply with these requirements are not covered under the warranty.

NOTE: THE COMMONWEALTH OF MASSACHUSETTS REQUIRES THAT THE FOLLOWING ADDITIONAL REQUIREMENTS MUST ALSO BE MET:

- Gas furnaces must be installed by a licensed plumber or gas fitter.
- A T-handle gas cock must be used.
- If the unit is to be installed in an attic, the passageway to and the service area around the unit must have flooring.

WARNING

TO PREVENT PROPERTY DAMAGE, PERSONAL INJURY OR DEATH DUE TO FIRE, DO NOT INSTALL THE FURNACE IN A MOBILE HOME, TRAILER, OR RECREATIONAL VEHICLE.

To ensure proper furnace operation, install, operate and maintain the furnace in accordance with these installation and operation instructions, all local building codes and ordinances. In their absence, follow the latest edition of the National Fuel Gas Code (NFPA 54/ANSI Z223.1) and/or local plumbing or waste water codes, and other applicable codes.
A copy of the National Fuel Gas Code (NFPA 54/ANSI Z223.1) can be obtained from any of the following:

American National Standards Institute
25 West 43rd Street, 4th Floor
New York, NY 10036

National Fire Protection Association
1 Batterymarch Park
Quincy, MA 02169-7471

CSA International
8501 East Pleasant Valley
Independence, OH 44131

The rated heating capacity of the furnace should be greater than or equal to the total heat loss of the area to be heated. The total heat loss should be calculated by an approved method or in accordance with “ASHRAE Guide” or “Manual J-Load Calculations” published by the Air Conditioning Contractors of America.

In the USA, this furnace MUST be installed in accordance with the latest edition of the ANSI Z223.1 booklet entitled “National Fuel Gas Code” (NFPA 54), and the requirements or codes of the local utility or other authority having jurisdiction. Additional helpful publications available from the NFPA are, NFPA 90A - Installation of Air Conditioning and Ventilating System and NFPA 90B - Warm Air Heating and Air Conditioning System.

All venting shall be in accordance with the National Fuel Gas Code, ANSI Z223.1, or applicable local building and/or air conditioning codes.

NOTE: FURNACES WITH NOX SCREENS MEET THE CALIFORNIA NOX EMISSION STANDARDS AND CALIFORNIA SEASONAL EFFICIENCY STANDARDS. ANNUAL INSPECTIONS OF THE FURNACE AND ITS VENT SYSTEM IS STRONGLY RECOMMENDED.

LOCATION REQUIREMENTS AND CONSIDERATIONS

Your unit model type determines which installation procedures must be used. For DR80TC models, you must follow instructions for Horizontal Left, Horizontal Right or Upflow installations only. These furnaces are not approved for Downflow installations.

DD80TC models may be installed in the Downflow position as well as Horizontal Left & Horizontal Right positions.

WARNING

TO PREVENT POSSIBLE EQUIPMENT DAMAGE, PROPERTY DAMAGE, PERSONAL INJURY OR DEATH, THE FOLLOWING BULLET POINTS MUST BE OBSERVED WHEN INSTALLING THIS UNIT.

Follow the instructions listed below when selecting a furnace location. Refer also to the guidelines provided in the *Combustion and Ventilation Air Requirements.*

- Centrally locate the furnace with respect to the proposed or existing air distribution system.
- Ensure the temperature of the return air entering the furnace is between 55°F and 100°F when the furnace is heating.
- Provisions must be made for venting combustion products outdoors through a proper venting system. The length of flue pipe could be a limiting factor in locating the furnace.
- Ensure adequate combustion air is available for the furnace. Improper or insufficient combustion air can expose building occupants to gas combustion products that could include carbon monoxide. Refer to *Combustion and Ventilation Air Requirements* section.
- The furnace must be level. If the furnace is to be set on a floor that may become wet or damp at times, the furnace should be supported above the floor on a concrete base sized approximately 1-½" larger than the base of the furnace.
- Ensure upflow or horizontal furnaces are not installed directly on carpeting, or any other combustible material. The only combustible material allowed is wood.
- Exposure to contaminated combustion air will result in safety and performance-related problems. Do not install the furnace where the combustion air is exposed to the following substances:
  - chlorinated waxes or cleaners
  - chlorine-based swimming pool chemicals
  - water softening chemicals
  - deicing salts or chemicals
  - carbon tetrachloride
  - halogen type refrigerants
  - cleaning solutions (such as perchloroethylene)
  - printing inks
  - paint removers
  - varnishes
  - hydrochloric acid
  - cements and glues
  - antistatic fabric softeners for clothes dryers and masonry acid washing materials
- If the furnace is used in connection with a cooling unit, install the furnace upstream or in parallel with the cooling unit coil. Premature heat exchanger failure will result if the cooling unit coil is placed ahead of the furnace.
- For vertical applications, the minimum cooling coil width shall not be less than furnace width minus 1". Additionally, a coil installed above an upflow furnace or under a counterflow furnace may be the same width as the furnace or may be one size larger than the furnace. Example: a "C" width coil may be installed with a "B" width furnace.
- For upflow applications, the front of the coil and furnace must face the same direction.
- If the furnace is installed in a residential garage, position the furnace so that the burners and ignition source are located not less than 18 inches (457 mm) above the floor. Protect the furnace from physical damage by vehicles.
- If the furnace is installed horizontally, the furnace access doors must be vertical so that the burners fire horizontally into the heat exchanger. Do not install the unit with the access doors on the "up/top" or "down/bottom" side of the furnace.
- Do not connect this furnace to a chimney flue that serves a separate appliance designed to burn solid fuel.
- Counterflow installation over a noncombustible floor. Before setting the furnace over the plenum opening, ensure the surface around the opening is smooth and level. A tight seal should be made between the furnace base and floor by using a silicon rubber caulking compound or cement grout.
- Counterflow installation over a combustible floor. If installation over a combustible floor becomes necessary, use an accessory subbase (see Specification Sheet applicable to your model for details). A special accessory subbase must be used for upright counterflow unit installations over any combustible material including wood. Follow the instructions with the subbase for proper installations. Do not install the furnace directly on carpeting, tile, or other combustible material other than wood flooring. **NOTE**: The subbase will not be required if an air conditioning coil is installed between the supply air opening on the furnace and the floor. The air conditioning coil must be downstream from the heat exchanger of the furnace.

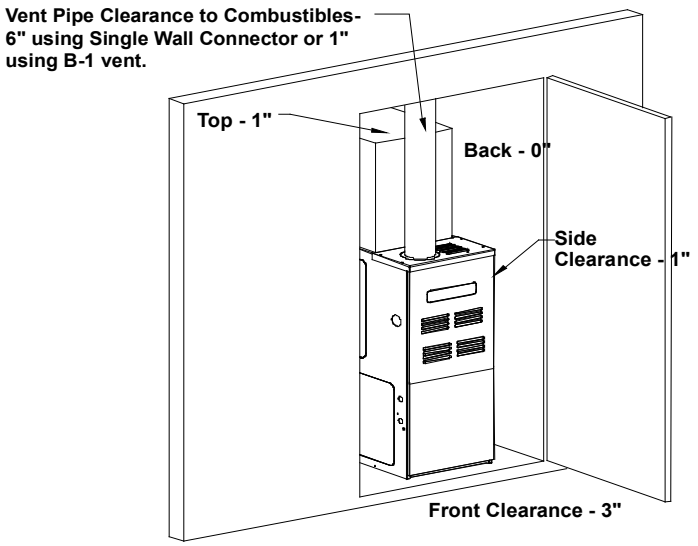

FIGURE 1

- Adequate combustion/ventilation air must be supplied to the closet.
- Furnace must be **completely** sealed to floor or base. Combustion / Ventilation air supply pipes must terminate 12” from top of closet and 12” from floor of closet. DO NOT remove solid base plate for side return.
- Return air ducts must be **completely** sealed to the furnace and terminate outside the enclosure surfaces.

CLEARANCES AND ACCESSIBILITY

Unobstructed front clearance of 24” **for servicing** is recommended.

VENT		SIDES	FRONT	BACK	TOP (PLENUM)
B1-VENT	SINGLE				
1"	6"	1"	3"	0"	1"

TOP CLEARANCE FOR HORIZONTAL CONFIGURATION - 1”

INSTALLATION POSITIONS

DR80TC model furnaces may be installed vertically (upflow) or horizontally with left or right side down. DD80TC model furnaces may be installed vertically (downflow) or horizontally with left or right side down. Do not install this furnace on its back. For vertically installed *upflow* furnaces, return air ductwork may be attached to the side panel(s) and/or basepan. For *upright* counterflow furnaces, return air ductwork must be attached to the top end of blower compartment end of the furnace. For any horizontally installed furnaces, return ductwork must be attached to the blower compartment end of the furnace.

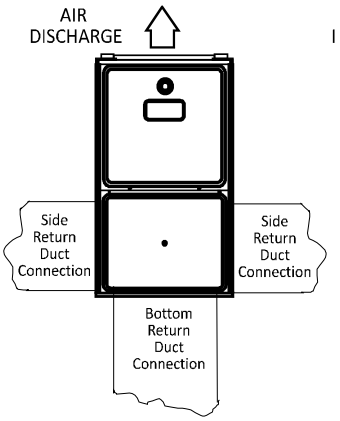

UPFLOW UPRIGHT

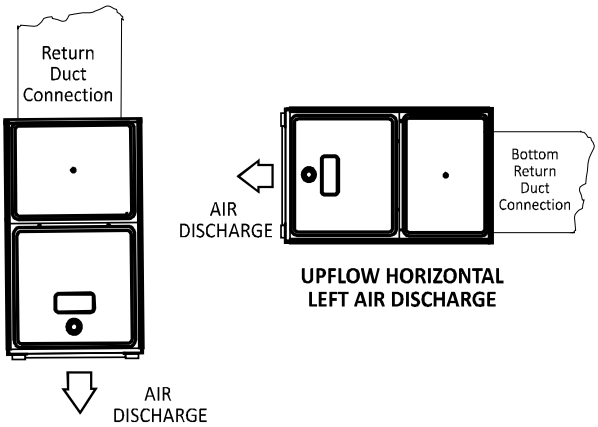

UPFLOW HORIZONTAL
LEFT AIR DISCHARGE

COUNTERFLOW

FIGURE 8

FIGURE 9

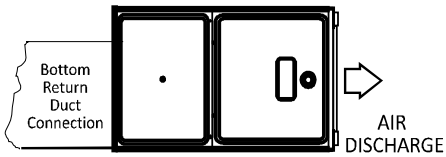

UPFLOW HORIZONTAL
RIGHT AIR DISCHARGE

FIGURE 10

NOTE: DUCTWORK MUST NEVER BE ATTACHED TO THE BACK OF THE FURNACE.

HORIZONTAL INSTALLATION

Line contact to framing is permitted when installed in the horizontal configuration. Line contact is defined as the portion of the cabinet that is formed by the intersection of the top and side. ACCESSIBILITY CLEARANCE, WHERE GREATER, SHOULD TAKE PRECEDENCE OVER MINIMUM FIRE PROTECTION CLEARANCE. A gas-fired furnace for installation in a residential garage must be installed so that the ignition source and burners are located not less than eighteen inches (18”) above the floor and is protected or located to prevent physical damage by vehicles. A gas furnace must not be installed directly on carpeting, tile, or other combustible materials other than wood flooring.

Furnace Suspension

If suspending the furnace from rafters or joist, use ⅜" threaded rod and 2"x2"x⅜" angle iron as shown below. The length of rod will depend on the application and the clearances necessary.

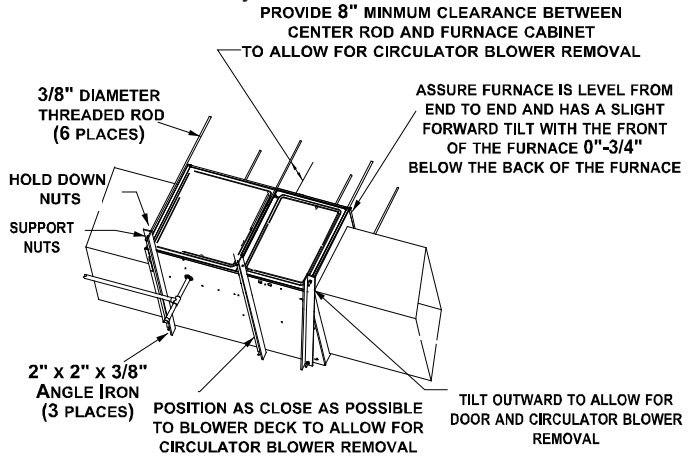

Suspended Furnace
Figure 2

WARNING

CARBON MONOXIDE POISONING HAZARD

Failure to follow the steps outlined below for each appliance connected to the venting system being placed into operation could result in carbon monoxide poisoning or death.

The following steps shall be followed with each appliance connected to the venting system placed in operation, while any other appliances connected to the venting system are not in operation:

1. **Seal any unused openings in the venting system.**
2. **Inspect the venting system for proper size and horizontal pitch, as required by the National Fuel Gas Code, ANSI Z223.1 or the Natural Gas and Propane Installation Code, CSA B149.1-15 and these instructions. Determine that there is no blockage or restriction, leakage, corrosion and other deficiencies which could cause an unsafe condition.**
3. **As far as practical, close all building doors and windows and all doors between the space in which the appliance(s) connected to the venting system are located and other spaces of the building.**
4. **Close fireplace dampers.**
5. **Turn on clothes dryers and any appliance not connected to the venting system. Turn on any exhaust fans, such as range hoods and bathroom exhausts, so they shall operate at maximum speed. Do not operate a summer exhaust fan.**
6. **Follow the lighting instructions. Place the appliance being inspected in operation. Adjust thermostat so appliance shall operate continuously.**
7. **Test for spillage from draft hood appliances at the draft hood relief opening after 5 minutes of main burner operation. Use the flame of a match or candle.**
8. **If improper venting is observed during any of the above tests, the venting system must be corrected in accordance with the National Fuel Gas Code ANSI Z223.1/NFPA 54 and/or National Gas and Propane Installation Code CSA B149.1-15.**
9. **After it has been determined that each appliance connected to the venting system properly vents when tested as outlined above, return doors, windows, exhaust fans, fireplace dampers and any other gas burning appliance to their previous conditions of use.**

AVERTISSEMENT

RISQUE D'INTOXICATION AU MONOXYDE DE CARBONE

Si les étapes décrites ci-dessous ne sont pas suivies pour chacun des appareils raccordés au système de ventilation au moment de sa mise en marche, cela peut entraîner une intoxication au monoxyde de carbone ou la mort.

Les étapes suivantes doivent être suivies pour chacun des appareils raccordés au système de ventilation au moment de sa mise en marche, alors que tous les autres appareils raccordés au système de ventilation ne sont pas en marche :

1. **Sceller toutes les ouvertures inutilisées du système de ventilation.**
2. **Inspecter le système de ventilation afin de vérifier si la taille et l'inclinaison par rapport à l'horizontale sont conformes aux exigences du National Fuel Gas Code, ANSI Z223.1/NFPA 54 ou du Code d'installation du gaz naturel et du propane, CSA B149.1 et à ces instructions. Vérifier qu'il n'y a pas d'obstruction ou de restriction, de fuite, de corrosion et d'autres problèmes qui pourraient entraîner une situation dangereuse.**
3. **Si possible, fermer toutes les portes et fenêtres du bâtiment ainsi que toutes les portes séparant l'endroit où se trouvent les appareils raccordés au système de ventilation et les autres zones du bâtiment.**
4. **Fermer le registre des foyers.**
5. **Mettre les sécheuses en marche ainsi que tous les autres appareils qui ne sont pas raccordés au système de ventilation. Mettre en marche tous les ventilateurs de tirage, comme celui des hottes de cuisine et des salles de bains, et les régler à la puissance maximale. Ne pas mettre en marche les ventilateurs d'été.**
6. **Suivre les instructions d'allumage. Mettre en marche l'appareil soumis à l'inspection. Régler le thermostat de manière à ce que l'appareil fonctionne en continu.**
7. **Vérifier la présence de fuite au niveau de l'ouverture du coupe-tirage des appareils qui en sont dotés après 5 minutes de fonctionnement du brûleur principal. Utiliser la flamme d'une allumette ou d'une bougie.**
8. **Si un problème de ventilation est observé pendant l'un des essais décrits ci-dessus, des correctifs doivent être apportés au système de ventilation conformément au National Fuel Gas Code, ANSI Z223.1/NFPA 54 et (ou) au Code d'installation du gaz naturel et du propane, CSA B149.1.**
9. **Une fois qu'il a été déterminé que chaque appareil raccordé au système de ventilation fonctionne correctement au moyen des essais décrits ci-dessus, les portes, les fenêtres, les ventilateurs, les registres de foyer et tous les autres appareils de combustion alimentés au gaz doivent être remis dans leur état initial.**

Corrections must be in accordance with the latest edition of the National Fuel Gas Code NFPA 54/ANSI Z223.1 and/or CAN/CSA B149 Installation Codes.

If resizing is required on any portion of the venting system, use the appropriate table in the latest edition of the National Fuel Gas Code ANSI Z223.1.

Thermostat Location

In an area having good air circulation, locate the thermostat about five feet high on a vibration-free inside wall. Do not install the thermostat where it may be influenced by any of the following:

- Drafts, or dead spots behind doors, in corners, or under cabinets.
- Hot or cold air from registers.
- Radiant heat from the sun.
- Light fixtures or other appliances.
- Radiant heat from a fireplace.
- Concealed hot or cold water pipes, or chimneys.
- Unconditioned areas behind the thermostat, such as an outside wall.

Consult the instructions packaged with the thermostat for mounting instructions and further precautions.

COMBUSTION & VENTILATION AIR REQUIREMENTS

WARNING

To avoid property damage, personal injury or death, sufficient fresh air for proper combustion and ventilation of flue gases must be supplied. Most homes require outside air be supplied into the furnace area.

Improved construction and additional insulation in buildings have reduced heat loss by reducing air infiltration and escape around doors and windows. These changes have helped in reducing heating/cooling costs but have created a problem supplying combustion and ventilation air for gas fired and other fuel burning appliances. Appliances that pull air out of the house (clothes dryers, exhaust fans, fireplaces, etc.) increase the problem by starving appliances for air.

House depressurization can cause back drafting or improper combustion of gas-fired appliances, thereby exposing building occupants to gas combustion products that could include carbon monoxide.

If this furnace is to be installed in the same space with other gas appliances, such as a water heater, ensure there is an adequate supply of combustion and ventilation air for all appliances. Refer to the latest edition of the National Fuel Gas Code NFPA 54/ANSI Z223.1 or CAN/CSA B149 Installation Codes or applicable provisions of the local building codes for determining the combustion air requirements for the appliances.

This furnace must use indoor air for combustion. It cannot be installed as a direct vent (i.e., sealed combustion) furnace.

Most homes will require outside air be supplied to the furnace area by means of ventilation grilles or ducts connecting directly to the outdoors or spaces open to the outdoors such as attics or crawl spaces.

Category I Venting (Vertical Venting)

WARNING

To prevent personal injury or death due to asphyxiation, this furnace must be Category I vented. Do not vent using Category III venting. Provisions must be made for proper venting system.

Category I Venting is venting at a non-positive pressure. A furnace vented as Category I is considered a fan-assisted appliance and the vent system does not have to be “gas tight”. **NOTE:** Gas furnaces with induced draft blowers draw products of combustion through a heat exchanger allowing, in some instances, common venting with natural draft appliances (i.e. water heaters). All installations must be vented in accordance with National Fuel Gas Code NFPA 54/ANSI Z223.1 - latest edition.

NOTE: The vertical height of the Category I venting system must be at least as great as the horizontal length of the venting system.

WARNING

To prevent possible personal injury or death due to asphyxiation, common venting with other manufacturer’s induced draft appliances is not allowed.

The minimum vent diameter for the Category I venting system is as shown:

MODEL	MINIMUM VENT	
	UPFLOW	COUNTERFLOW
060	4 inch	4 inch
080	4 inch	4 inch
100	5 inch	4 inch

Under some conditions, larger vents than those shown above may be required or allowed. *When an existing furnace is removed from a venting system serving other appliances*, the venting system may be too large to properly vent the remaining attached appliances.

Furnaces are shipped with the induced draft blower discharging from the top of the furnace (“Top” is as viewed for an upflow installation). The induced draft blower on DR80TC models can be rotated 90 degrees for Category I venting. For furnaces installed vertically or horizontally, a four-inch single wall pipe can be used to extend the induced draft blower outlet ½” beyond the furnace cabinet. On DR80TC furnaces installed upflow or horizontally with left side down, the draft inducer may be rotated to discharge from the right side of the cabinet. When rotating the inducer a chimney transition bottom kit (part # 4053501S) is needed for proper alignment of the inducer outlet and the vent exit hole in the side of the cabinet. The inducer may NOT be rotated on DD80TC model furnaces regardless of installation position.

THIS PRODUCT IS NOT DESIGNED FOR COUNTERCLOCKWISE INDUCED DRAFT BLOWER ROTATION.

Vent the furnace in accordance with the National Fuel Gas Code NFPA 54/ANSI Z223.1 - latest edition.

Venting

THIS FURNACE IS NOT DESIGN CERTIFIED TO BE HORIZONTALLY VENTED.

To rotate the induced draft blower clockwise, you will need to purchase one (0270F01119) chimney transition bottom kit.

1. Disconnect electrical power from the furnace.
2. Disconnect the induced draft blower power leads, flue pipe, and pressure switch tubing.
3. Remove the round cutout from the right side of the wrapper.
4. Remove and save the four screws that fasten the induced draft blower to the flue collector box.
5. Remove and save the three screws that hold the chimney assembly to the induced draft blower.
6. Remove and save the four screws that fasten the chimney top to the chimney bottom.
7. Remove the chimney transition bottom from the transition bottom kit.
8. Install the chimney top with the four screws retained from step 6 onto the new chimney transition bottom from the transition bottom kit.
9. Install chimney assembly with the three screws retained from step 5 onto the induced draft blower.
10. Reinstall the induced draft blower rotating it 90 degrees clockwise from the original upflow configuration using the four screws retained in step 3. Ensure the gasket located between the induced draft blower and the collector box is rotated accordingly.
11. Reconnect the induced draft blower power leads. **NOTE:** If the wires are not long enough, pull extra wire from the wire bundle in the blower compartment.
12. Reconnect the flue pipe, and the pressure switch tubing. Ensure that all wires and the pressure switch tubing is at least one inch from the flue pipe, or any other hot surface.
13. Restore power to furnace.

Counterflow units are shipped with the induced draft blower discharging from the top of the furnace (“Top” as viewed for a counterflow installation).

Vent the furnace in accordance with the National Fuel Gas Code NFPA54/ANSI Z223.1 - latest edition.

WARNING

Never allow the products of combustion, including carbon monoxide, to enter the return ductwork or circulation air supply.

MASONRY CHIMNEYS

WARNING

Possibility of property damage, personal injury or death damaging condensation can occur inside masonry chimneys when a single fan-assisted Category I appliance (80% AFUE Furnace) is vented without adequate dilution air. Do not connect an 80% furnace to a masonry Chimney unless the furnace is common vented with a draft hood equipped appliance or the chimney is lined with a metal liner or Type B metal vent. All installations using masonry chimneys must be sized in accordance with the appropriate venting tables. If an 80% furnace is common vented with a draft hood equipped appliance, the potential for condensation damage may still exist with extremely cold conditions, long vent connectors, exterior chimneys, or any combination of these conditions. The risk of condensation damage is best avoided by using masonry chimneys as a pathway for properly sized metal liner or Type B metal vent.

Masonry Chimney Termination

A masonry chimney used as a vent for gas fired equipment must extend at least three feet above the highest point where it passes through the roof. It must extend at least two feet higher than any portion of a building within a horizontal distance of 10 feet. In addition, the chimney must terminate at least 3 feet above any forced air inlet located within 10 feet. The chimney must extend at least five feet above the highest connected equipment draft hood outlet or flue collar.

ELECTRICAL CONNECTIONS

WARNING

HIGH VOLTAGE
To avoid risk of electrical shock, wiring to the unit must be polarized and grounded.

WARNING

HIGH VOLTAGE
To avoid personal injury or death due to electrical shock, disconnect electrical power before servicing or changing any electrical wiring.

CAUTION

Label all wires prior to disconnection when servicing controls. Wiring errors can cause improper and dangerous operation after servicing.

Wiring Harness

The wiring harness is an integral part of this furnace. Field alteration to comply with electrical codes should not be required. Wires are color coded for identification purposes. Refer to the wiring diagram for wire routings. If any of the original wire as supplied with the furnace must be replaced, it must be replaced with wiring material having a temperature rating of at least 105°C. Any replacement wiring must be a copper conductor.

115 Volt Line Connections

Before proceeding with electrical connections, ensure that the supply voltage, frequency, and phase correspond to that specified on the unit rating plate. Power supply to the furnace must be NEC Class 1, and must comply with all applicable codes. The furnace must be electrically grounded in accordance with local codes or, in their absence, with the latest edition of The National Electric Code, ANSI NFPA 70 and/or The Canadian Electric Code CSA C22.1.

Use a separate fused branch electrical circuit containing properly sized wire, and fuse or circuit breaker. The fuse or circuit breaker must be sized in accordance with the maximum overcurrent protection specified on the unit rating plate. An electrical disconnect must be provided at the furnace location.

Connect hot, neutral, and ground wires as shown in the wiring diagram located on the unit's blower door. Metal conduit is not considered a substitute for an actual ground wire to the unit.

Line polarity must be observed when making field connections. Line voltage connections can be made through either the right or left side panel. The furnace is shipped configured for a right side electrical connection with the junction box located inside the burner compartment (blower compartment for downflows). To make electrical connections through the opposite side of the furnace, the junction box must be relocated to the other side of the burner (or blower) compartment prior to making electrical connections. To relocate the junction box, follow the steps shown below.

NOTE: Wire routing must not to interfere with circulator blower operation, filter removal, or routine maintenance.

Junction Box Relocation

WARNING

Edges of sheet metal holes may be sharp. Use gloves as a precaution when removing plugs.

WARNING

To prevent personal injury, electrical shock, disconnect electrical power before installing or servicing thus unit.

1. Remove both doors from the furnace.
2. Remove and save the screws holding the junction box to the right side of the furnace.
3. Attach the junction box to the left side of the furnace, using the screws removed in step 2.
4. Check the location of the wiring. Confirm that it will not be damaged by heat from the burners or by the rotation of the fan. Also confirm that wiring location will not interfere with filter removal or other maintenance.

IMPORTANT NOTE: To avoid possible equipment malfunction, route the low voltage wires to avoid interference with filter removal or other maintenance.

WARNING

HIGH VOLTAGE
To avoid the risk of injury, electrical shock or death, the furnace must be electrically grounded in accordance with local codes or in their absence, with the latest edition of the National Electric Codes.

To ensure proper unit grounding, the ground wire should run from the furnace ground screw located inside the furnace junction box all the way back to the electrical panel. **NOTE:** Do not use gas piping as an electrical ground. To confirm proper unit grounding, turn off the electrical power and perform the following check.

1. Measure resistance between the neutral (white) connection and one of the burners.
2. Resistance should measure 10 ohms or less.

This furnace is equipped with a blower door interlock switch which interrupts unit voltage when the blower door is opened for servicing. Do not defeat this switch.

GAS SUPPLY AND PIPING

The furnace rating plate includes the approved furnace gas input rating and gas types. The furnace must be equipped to operate on the type of gas applied. This includes any conversion kits required for alternate fuels and/or high altitude.

WARNING

To prevent unreliable operation or equipment damage, the inlet gas supply pressure must be as specified on the unit rating plate with all other household gas fired appliances operating.

Inlet gas supply pressures must be maintained within the ranges specified in the following table. The supply pressure must be constant and available with all other household gas fired appliances operating. The minimum gas supply pressure must be maintained to prevent unreliable ignition. The maximum must not be exceeded to prevent unit overfiring.

NOTE: Do not remove the gas valve inlet plug before the gas line is installed. Replace if water or debris has been introduced.

INLET GAS SUPPLY PRESSURE		
Natural Gas	Minimum: 4.5" w.c.	Maximum: 10.0" w.c.
Propane Gas	Minimum: 11.0" w.c.	Maximum: 13.0" w.c.

NOTE: Adjusting the minimum supply pressure below the limits in the above table could lead to unreliable ignition. Gas input to the burners must not exceed the rated input shown on the rating plate. Overfiring of the furnace can result in premature heat exchanger failure. Gas pressures in excess of 13 inches water column can also cause permanent damage to the gas valve.

At all altitudes, the manifold pressure must be within 0.3 inches w.c. of that listed in the Specification Sheet applicable to your model for the fuel used. At all altitudes and with either fuel, the air temperature rise must be within the range listed on the furnace nameplate. Should this appliance be converted to LP, refer to the instructions included in the factory authorized LP conversion kit.

High Altitude Derate

High altitude installations may require both a pressure switch and an orifice change. These changes are necessary to compensate for the natural reduction in the density of both the gas fuel and the combustion air at higher altitude.

Clearance in accordance with local installation codes, the requirements of the gas supplier and the manufacturer's installation instructions.

Dégaugement conforme aux dodes d'installation locaux, aux exigences du fournisseur de gaz et aux instructions d'installation du fabricant.

Gas	Altitude (feet)			Manifold Pressure	
	0-2000 (HA/LP Kit)	2000-5400 (HA/LP Kit)	5400-7800 (HA/LP Kit)	High Stage	Low Stage
Natural	None / None	HA-04 / None	HA-05 / None	3.5" w.c.	1.9" w.c.
Propane	None / LPM-32	HA-04 / LPM-32	HA-05 / LPM-32	10.0" w.c.	6.0" w.c.

NOTE: GAS FURNACES ARE CERTIFIED TO 7800 FEET, EXCEPT CANADA. IN CANADA, GAS FURNACES ARE ONLY CERTIFIED TO 4500 FEET.

EXCEPTION: FOR INSTALLATIONS AT AN ALTITUDE OF 2000 - 5400 FEET, HIGH ALTITUDE KIT HA-05 NEEDS TO BE USED FOR *DR80TC0603B*, *DR80TC0604B* & *DD80TC0603B* MODELS

Consult the furnace Specification Sheet for appropriate manufacturer's kits for propane gas and/or high altitude installations. The indicated kits must be used to insure safe and proper furnace operation. All conversions must be performed by a qualified installer, or service agency.

Propane Gas Conversion

WARNING

Possible property damage, personal injury or death may occur if the correct conversion kits are not installed. The appropriate kits must be applied to ensure safe and proper furnace operation. All conversions must be performed by a qualified installer or service agency.

This unit is configured for natural gas. The appropriate manufacturer's propane gas conversion kit must be applied for propane gas installations.

If converting to LP gas, it is recommended that an LPLP0* kit also be installed. The use of this kit will prevent the furnace from firing when the LP gas supply pressure is too low to support proper combustion.

Gas Piping Connections

WARNING

To avoid possible unsatisfactory operation of equipment, use the proper size of natural/propane gas piping needed when running pipe from the meter/tank to the furnace.

When sizing gas lines, be sure to include all appliances which will operate simultaneously.

The gas piping supplying the furnace must be properly sized based on the gas flow required, specific gravity of the gas, and length of the run. The gas line installation must comply with local codes, or in their absence, with the latest edition of the National Fuel Gas Code, NFPA 54/ANSI Z223.1.

Natural Gas Capacity of Pipe
In Cubic Feet of Gas Per Hour (CFH)

Length of Pipe in Feet	Nominal Black Pipe Size				
	1/2"	3/4"	1"	1 1/4"	1 1/2"
10	132	278	520	1050	1600
20	92	190	350	730	1100
30	73	152	285	590	980
40	63	130	245	500	760
50	56	115	215	440	670
60	50	105	195	400	610
70	46	96	180	370	560
80	43	90	170	350	530
90	40	84	160	320	490
100	38	79	150	305	460

(Pressure 0.5 psig or less and pressure drop of 0.3" W.C.; Based on 0.60 Specific Gravity Gas)

$$CFH = \frac{\text{BTUH Furnace Input}}{\text{Heating Value of Gas (BTU/Cubic Foot)}}$$

To connect the furnace to the building's gas piping, the installer must supply a ground joint union, drip leg, manual shutoff valve, and line and fittings to connect to gas valve. In some cases, the installer may also need to supply a transition piece from ½" pipe to a larger pipe size.
The following stipulations apply when connecting gas piping.

- Gas piping must be supported external to the furnace cabinet so that the weight of the gas line does not distort the burner rack, manifold or gas valve.
- Use black iron or steel pipe and fittings for the building piping.
- Use pipe joint compound on male threads only. Pipe joint compound must be resistant to the action of the fuel used.
- Use ground joint unions.
- Install a drip leg to trap dirt and moisture before it can enter the gas valve. The drip leg must be a minimum of three inches long.
- Use two pipe wrenches when making connection to the gas valve to keep it from turning. The orientation of the gas valve on the manifold must be maintained as shipped from the factory.
- Install a manual shutoff valve between the gas meter and unit within six feet of the unit. If a union is installed, the union must be downstream of the manual shutoff valve, between the shutoff valve and the furnace.
- Tighten all joints securely.
- Connect the furnace to the building piping by one of the following methods:
  - Rigid metallic pipe and fittings.
  - Semi-rigid metallic tubing and metallic fittings. Aluminum alloy tubing must not be used in exterior locations.
  - Use listed gas appliance connectors in accordance with their instructions. Connectors must be fully in the same room as the furnace.
  - Protect connectors and semi-rigid tubing against physical and thermal damage when installed. Ensure aluminum-alloy tubing and connectors are coated to protect against external corrosion when in contact with masonry, plaster, or insulation, or subjected to repeated wetting by liquids such as water (except rain water), detergents, or sewage.

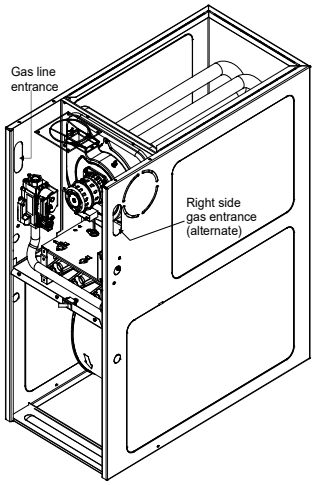

General Furnace Layout
Figure 3

Upflow Installations

When the gas piping enters through the side of the furnace, the installer must supply the following fittings (starting from the gas valve):

- Close nipple.
- 90 degree elbow.
- Straight pipe to reach the exterior of the furnace.

A ground joint union, drip leg, and manual shutoff valve must also be supplied by the installer. In some cases, the installer may also need to supply a transition piece from ½" to another pipe size.
When the gas piping enters through the left side of the furnace, the installer must supply the following fittings (starting from the gas valve):

- 90 degree elbow.
- Straight pipe to reach the exterior of the furnace.
- A ground joint union, drip leg, and manual shutoff valve must also be supplied by the installer. In some cases, the installer may also need to supply a transition piece from ½ inch to another pipe size.

Counterflow Installations

When the gas piping enters through the left side of the furnace, the installer must supply a straight pipe and a 90 degree elbow to reach the exterior of the furnace.

A ground joint union, drip leg and manual shutoff valve must also be supplied by the installer. In most cases, the installer may also need to supply a transition piece from ½" to another pipe size. When the gas piping enters through the right side of the furnace, the installer must supply the following fittings (starting at the gas valve):

- Close Nipple.
- 90 Degree Elbow.
- Straight Pipe to Reach Exterior of Furnace.

Gas Piping Checks

Before placing unit in operation, leak test the unit and gas connections.

WARNING

To avoid possibility of explosion or fire, never use a match or open flame to test for leaks.

Check for leaks using an approved chloride-free soap and water solution, an electronic combustible gas detector, or other approved testing methods.

CAUTION

To prevent property damage or personal injury due to fire, the following instructions must be performed regarding gas connections, pressure testing, location of shutoff valve and installation of gas piping.

NOTE: Never exceed specified pressures for testing. Higher pressure may cause gas valve failure.
Disconnect this unit and shutoff valve from the gas supply piping system before pressure testing the supply piping system with pressures in excess of ½ psig (3.48 kPa).

This unit must be isolated from the gas supply system by closing its manual shutoff valve before pressure testing of gas supply piping system with test pressures equal to or less than ½ psig (3.48 kPa).

Propane Gas Tanks and Piping

WARNING

If the gas furnace is installed in a basement, an excavated area or confined space, it is strongly recommended to contact a propane supplier to install a gas detecting warning device in case of a gas leak.

- **Since propane gas is heavier than air, any leaking gas can settle in any low areas or confined spaces.**
- **Propane gas odorant may fade, making the gas undetectable except with a warning device.**

A gas detecting warning system is the only reliable way to detect a propane gas leak. Rust can reduce the level of odorant in propane gas. Do not rely on your sense of smell. Contact a local propane gas supplier about installing a gas detecting warning system. If the presence of gas is suspected, follow the instructions on Page 3 of this manual.

All propane gas equipment must conform to the safety standards of the National Board of Fire Underwriters, NBFU Manual 58.

For satisfactory operation, propane gas pressure must be 10 inch WC at the furnace manifold with all gas appliances in operation. Maintaining proper gas pressure depends on three main factors:

1. Vaporization rate, depending on temperature of the liquid, and “wetted surface” area of the container or containers.
2. Proper pressure regulation (Two-stage regulation vis recommended for both cost and efficiency).
3. Pressure drop in lines between regulators, and between second stage regulator and the appliance. Pipe size will depend on length of pipe run and total load of all appliances.

Complete information regarding tank sizing for vaporization, recommended regulator settings, and pipe sizing is available from most regulator manufacturers and propane gas suppliers.

Use a pipe thread compound that is approved for natural gas and LP Gas.

Refer to the following illustration for typical propane installations and piping.

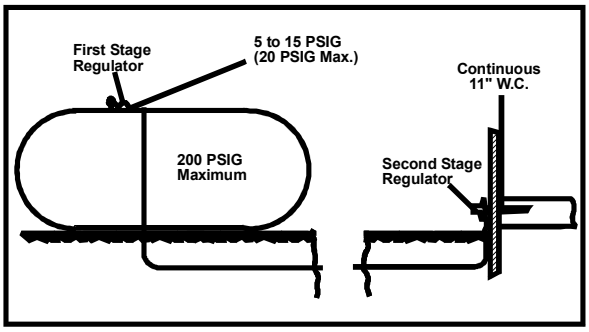

Propane Gas Installation (Typ.)
Figure 4

Propane Gas Piping Charts

Sizing Between First and Second Stage Regulator*
Maximum Propane Capacities listed are based on 2 psig pressure drop at 10 psig setting.
Capacities in 1,000 BTU/hour.

Pipe or Tubing Length, Feet	Tubing Size, O.D. Type L					Nominal Pipe Size Schedule 40	
	3/8"	1/2"	5/8"	3/4"	7/8"	1/2"	3/4"
10	730	1,700	3,200	5,300	8,300	3,200	7,500
20	500	1,100	2,200	3,700	5,800	2,200	4,200
30	400	920	2,000	2,900	4,700	1,800	4,000
40	370	850	1,700	2,700	4,100	1,600	3,700
50	330	770	1,500	2,400	3,700	1,500	3,400
60	300	700	1,300	2,200	3,300	1,300	3,100
80	260	610	1,200	1,900	2,900	1,200	2,600
100	220	540	1,000	1,700	2,600	1,000	2,300
125	200	490	900	1,400	2,300	900	2,100
150	190	430	830	1,300	2,100	830	1,900
175	170	400	780	1,200	1,900	770	1,700
200	160	380	730	1,100	1,800	720	1,500

Sizing Between Second Stage and Appliance Regulator*
Maximum Propane Capacities listed are based on 2 psig pressure drop at 10 psig setting.
Capacities in 1,000 BTU/hour.

Pipe or Tubing Length, Feet	Tubing Size, O.D. Type L						Nominal Pipe Size Schedule 40				
	3/8"	1/2"	5/8"	3/4"	7/8"	1-1/8"	1/2"	3/4"	1"	1-1/4"	1-1/2"
10	39	92	199	329	501	935	275	567	1,071	2,205	3,307
20	26	62	131	216	346	630	189	393	732	1,496	2,299
30	21	50	107	181	277	500	152	315	590	1,212	1,858
40	19	41	90	145	233	427	129	267	504	1,039	1,559
50	18	37	79	131	198	376	114	237	448	910	1,417
60	16	35	72	121	187	340	103	217	409	834	1,275
80	13	29	62	104	155	289	89	185	346	724	1,066
100	11	26	55	90	138	255	78	162	307	630	976
125	10	24	48	81	122	224	69	146	275	567	866
150	9	21	43	72	109	202	63	132	252	511	787
200	8	19	39	66	100	187	54	112	209	439	665
250	8	17	36	60	93	172	48	100	185	390	590

CIRCULATING AIR

WARNING

NEVER ALLOW THE PRODUCTS OF COMBUSTION, INCLUDING CARBON MONOXIDE, TO ENTER THE RETURN DUCT WORK OR CIRCULATION AIR SUPPLY.

Duct systems and register sizes must be properly designed for the CFM and external static pressure rating of the furnace. Ductwork should be designed in accordance with the recommended methods of "Air Conditioning Contractors of America" Manual D.

A duct system must be installed in accordance with Standards of the National Board of Fire Underwriters for the Installation of Air Conditioning, Warm Air Heating and Ventilating Systems. Pamphlets No. 90A and 90B.
A closed return duct system must be used, with the return duct connected to the furnace. **NOTE:** Ductwork must never be attached to the back of the furnace. For installations requiring more than 1800 CFM, use a bottom return or two sided return. Supply and return connections to the furnace may be made with flexible joints to reduce noise transmission. To prevent the blower from interfering with combustion air or draft when a central return is used, a connecting duct must be installed between the unit and the utility room wall. A room, closet, or alcove must not be used as a return air chamber.

When the furnace is used in connection with a cooling unit, the furnace should be installed in parallel with or on the upstream side of the cooling unit to avoid condensation in the heating element. With a parallel flow arrangement, the dampers or other means used to control the flow of air must be adequate to prevent chilled air from entering the furnace and, if manually operated, must be equipped with means to prevent operation of either unit unless the damper is in the full heat or cool position.

When the furnace is installed without a cooling coil, it is recommended that a removable access panel be provided in the outlet air duct. This opening shall be accessible when the furnace is installed and shall be of such a size that the heat exchanger can be viewed for visual light inspection or such that a sampling probe can be inserted into the airstream. The access panel must be made to prevent air leaks when the furnace is in operation.

When furnace duct(s) supply air outside the space containing the furnace, a return air duct must terminate in the same space as the supply duct and be sealed to the furnace casing.

When the furnace is heating, the temperature of the return air entering the furnace must be between 55°F and 100°F.

CHECKING DUCT STATIC

Refer to your furnace rating plate for the maximum ESP (external duct static) rating.

Total external static refers to static pressure created by all components external to the furnace cabinet. Cooling coils, filters, ducts, grilles, registers must all be considered when reading your total external static pressure. The supply duct pressure must be read between the furnace and the cooling coil. This reading is usually taken by removing the "A" shaped block off plate from the end on the coil; drilling a test hole in it and reinstalling the block off plate. Take a duct static reading at the test hole. Tape up the test hole after your test is complete. The negative pressure must be read between the filter and the furnace blower.

Too much external static pressure will result in insufficient air that can cause excessive temperature rise. This can cause limit switch tripping and heat exchanger failure.

To determine total external duct static pressure, proceed as follows:

1. With clean filters in the furnace, use a manometer to measure the static pressure of the return duct at the inlet of the furnace. (Negative Pressure)
2. Measure the static pressure of the supply duct. (Positive Pressure)
3. The difference between the two numbers is .4" w.c.

EXAMPLE:
static reading from return duct = -.1" w.c.
static reading from supply duct = .3" w.c.
total external static pressure on this system = .4" w.c.

NOTE: BOTH READINGS MAY BE TAKEN SIMULTANEOUSLY AND READ DIRECTLY ON THE MANOMETER IF SO DESIRED. IF AN AIR CONDITIONER COIL OR ELECTRONIC AIR CLEANER IS USED IN CONJUNCTION WITH THE FURNACE, THE READINGS MUST ALSO INCLUDE THESE COMPONENTS, AS SHOWN IN THE FOLLOWING DRAWING.

4. Consult proper tables for the quantity of air.

If the total external static pressure exceeds the maximum listed on the furnace rating plate, check for closed dampers, registers, undersized or poorly laid out duct work.

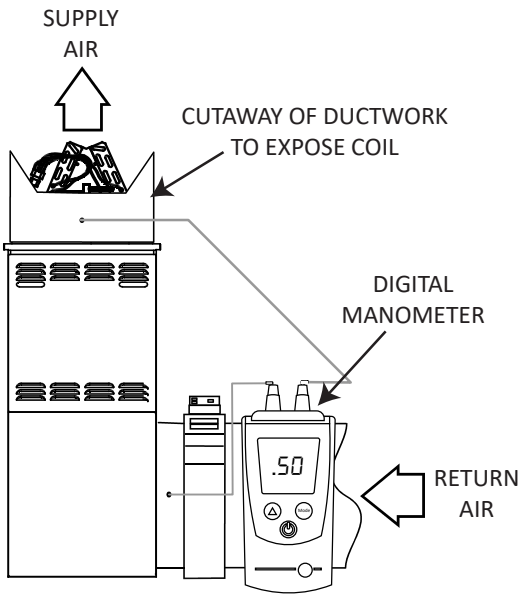

Checking Static Pressure
Figure 5

Filters - Read This Section Before Installing The Return Air Ductwork

Filters must be used with this furnace. Discuss filter maintenance with the building owner. Filters do not ship with this furnace, but must be provided by the installer. Filters must comply with UL900 or CAN/ULCS111 standards. Damage or repairs due to the installation of the furnace without filters is not covered under the warranty.

Upright Installations

Depending on the installation and/or customer preference, differing filter arrangements can be applied. Filters can be installed in the central return register or a side panel external filter rack kit (upflows), or the ductwork above a downflow furnace. As an alternative, a media air filter or electronic air cleaner can be used as the primary filter.

Horizontal Installations

Filters must be installed in either the central return register or in the return air duct work.

Circulation Air Filters

One of the most common causes of a problem in a forced air heating system is a blocked or dirty filter. Circulating air filters must be inspected monthly for dirt accumulation and replaced if necessary. Failure to maintain clean filters can cause premature heat exchanger failure.

A new home may require more frequent replacement until all construction dust and dirt is removed.

Upflow / Horizontal Models	Minimum Recommended Filter Size^
DR80TC0603B*	1 - 16 X 25 Side or 1 - 14 X 24 Bottom Return*
DR80TC0604B*	1 - 16 X 25 Side or 14 X 24 Bottom Return
DR80TC0803B*	1 - 16 X 25 Side or Bottom Return
DR80TC0804C*	1 - 16 X 25 Side or Bottom Return
DR80TC0805C*[1]	1 - 16 X 25 Side or Bottom Return[1]
DR80TC0805D*[1]	1 - 16 X 25 Side or Bottom Return[1]
DR80TC1005C*	2 - 16 X 25 Side or 1 - 20 X 25 Bottom Return
Downflow / Horizontal Models	
DD80TC0603B*	2 - 10 X 20 or 1 - 16 X 25 Top Return
DD80TC0803B*	2 - 10 X 20 or 1 - 16 X 25 Top Return
DD80TC0805C*	2 - 14 X 20 or 1 - 20 X 25 Top Return
DD80TC1005C*	2 - 14 X 20 or 1 - 20 X 25 Top Return

^ Larger filters may be used, filters may also be centrally located
[1] = use 2 - 16 X 25 filters and two side returns or 20 X 25 filter on bottom return or a combination of side & bottom if furnace is connected to a cooling unit over 4 tons nominal capacity

Cool Cloud HVAC Phone Application

Actual screens may look different based on the mobile device being used.

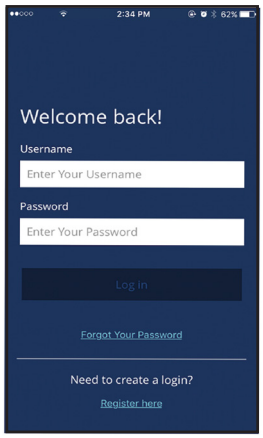

Figure 11

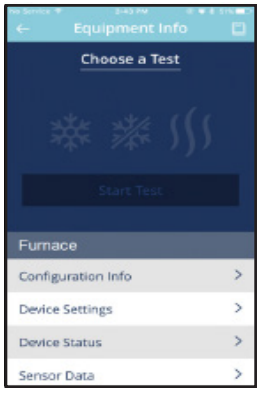

Figure 12

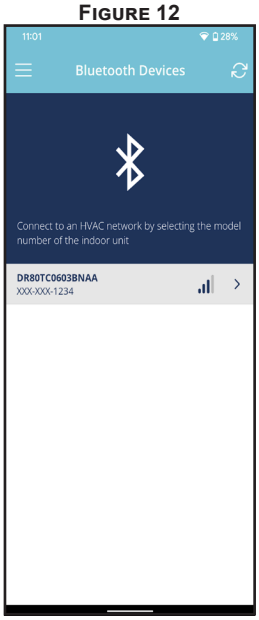

Figure 13

This furnace is Bluetooth ready and functions with the Cool Cloud HVAC phone application designed to improve the contractor's setup / diagnostic experience. Users can see specific model information, review active diagnostic error codes, observe system status during operation, make system menu adjustments, add site visit notes and run system testing of all operational modes (heat / cool / fan) directly from the phone. The phone application is also capable of directly updating the furnace software anytime updates are available. The application will automatically notify the user if updates are available.

NOTE: The software update may take up to 20 minutes to complete.

Quick Start Guide For Communicating Outdoor Units

EXTREMELY IMPORTANT: For all cooling calls the system only requires a single Y input from the thermostat. For all heating calls (including dual fuel applications) the system only requires a single W input from the thermostat. Internal algorithms will control all available cooling and heating stages including dual fuel operation based on these inputs. Any single-stage 24VAC thermostat can be used. For proper operation the thermostat must be setup to control a single-stage AC outdoor unit and to control a single stage gas furnace. The control board does not accommodate an O wire thermostat input (reversing valve signal). If a heat pump is installed, the thermostat should be setup as stated above. Setting the thermostat for the heat pump control or multi stage control may result in incorrect performance.

1. Connect all necessary thermostat wires to the thermostat connector on the furnace control as instructed by the applicable wiring diagrams shown in this section.
2. Connect the 1 & 2 wires between the indoor and outdoor unit for communicating operation.
   NOTE: Verify two stage outdoor units include a 24 VAC transformer (for outdoor control board power) Two stage outdoor units may not behave properly without this 24 VAC transformer.

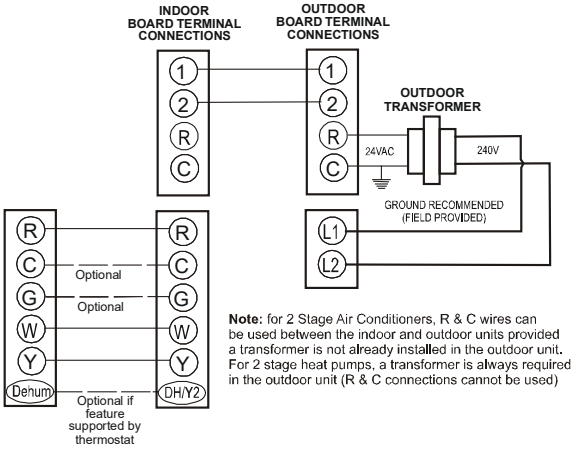

Communicating Two Stage Air Conditioner or Heat Pump
Figure 14

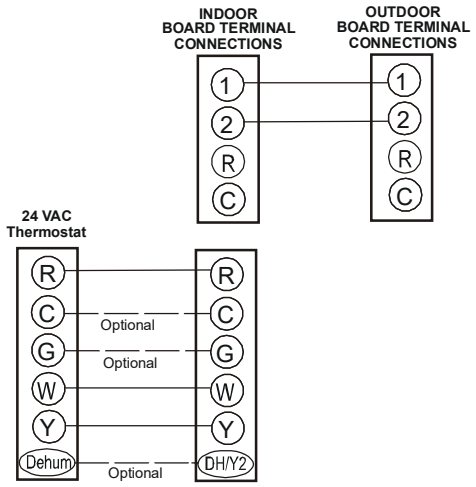

Communicating Inverter Air Conditioner or Heat Pump
Figure 15

3. Download the Cool Cloud HVAC phone application for charging and to configure/test system operations.

NOTE: When new versions of Bluetooth Communication Software and Furnace Control Software are available, the phone application notifies the user. Software updates are classified as either optional or mandatory and installed by using the phone application. Ensure all mandatory software updates have been installed. Review notes for optional software updates and install if necessary.

NOTE: If an E11 code exists for the inverter system immediately after line voltage is applied (code shown in the Cool Cloud HVAC phone application or displayed on the inverter control), the System Verification Test needs to be completed before any other operation. See the following procedure.

1. Allow the system to remain Idle for 5 minutes.
2. Turn the system verification test on either by using the phone application, or by entering the SUt menu through the furnace push buttons.
3. Wait for the test to complete.

Charging

1. Inverter units using the Cool Cloud HVAC phone application or control board push button:
   a. Inverter units are charged by setting the Cr9 menu (Charge Mode) to ON through the furnace control board push buttons or through the Cool Cloud HVAC phone application.
   b. The System will remain in charge mode (high speed) for 60 minutes before timing out.
   c. The installer must manually shut off charge mode once complete.
2. Two-stage outdoor units using the Cool Cloud HVAC application:
   a. Charge the outdoor unit as required using the charging information provided with the outdoor equipment.

Gas Furnace Testing

1. Two-stage Operation using the Cool Cloud HVAC application:
   a. Select the gas heat icon after entering the furnace menus.
   b. Select any value less than 50% for low stage operation and any value greater than 50% for high stage operation.
2. Confirm thermostat heating and cooling calls function properly with equipment.

Quick Start Guide For Non-Communicating Outdoor Units

EXTREMELY IMPORTANT: For two-stage gas heating, the system only needs a single W input. Internal algorithms will control staging of the gas furnace automatically based on the single W input. For non-communicating outdoor unit wiring see instructions below.

1. Use the wiring diagrams below to connect low voltage thermostat wires.

NOTE: When installing the furnace with a non communicating heat pump wire directly from the "O" terminal on the thermostat to the reversing valve "O" terminal on the non communicating heat pump. See Figure 23 for single stage and Figure 24 for the two stage diagrams.

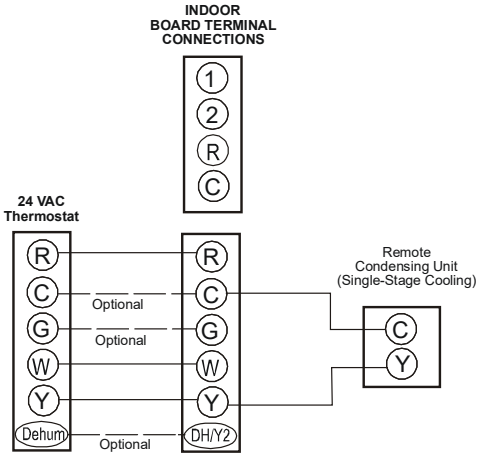

Non-Communicating Single Stage A/C
Figure 16

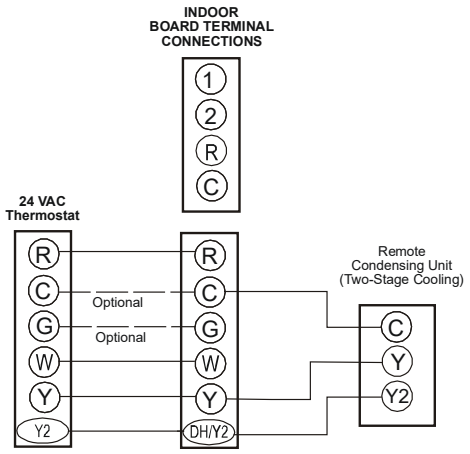

Non Communicating Two Stage A/C
Figure 17

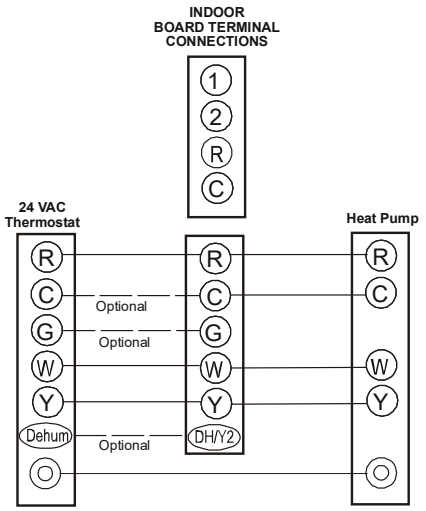

Non-Communicating Single Stage Heat Pump
Figure 18

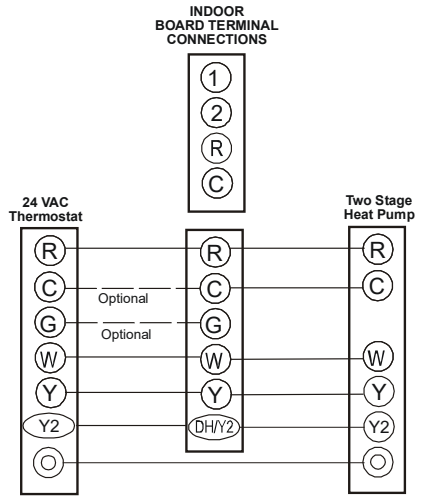

Non-Communicating Two Stage Heat Pump
Figure 19

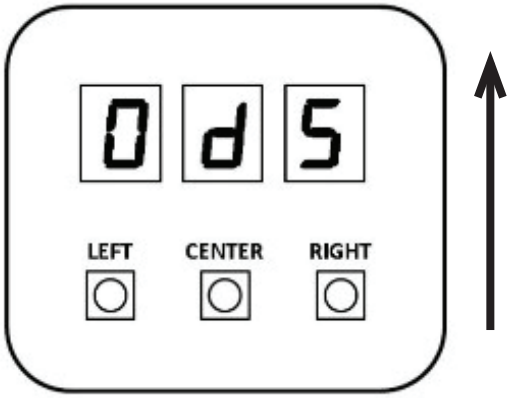

Figure 20

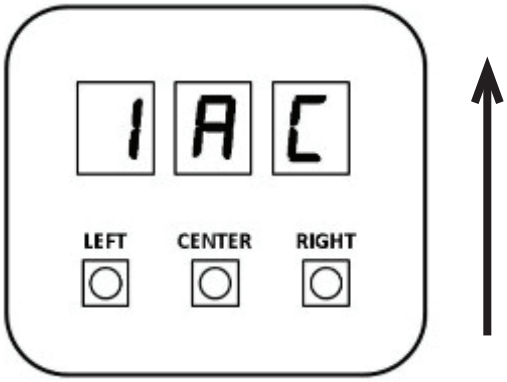

Figure 21

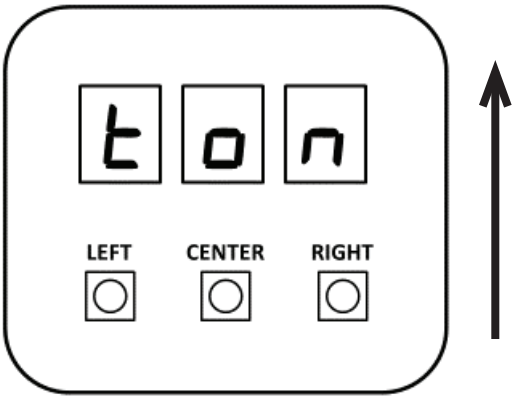

Figure 22

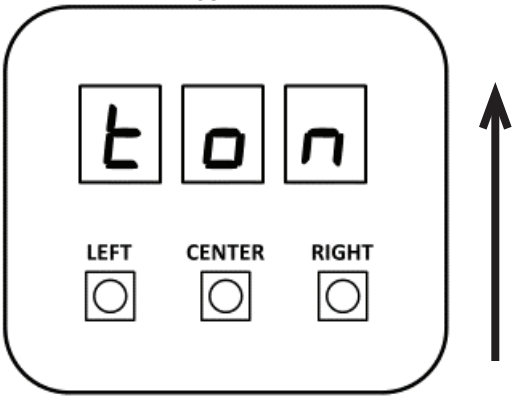

Figure 23

NOTE: The arrow next to the display windows refers to the correct orientation for reading characters on the display.

2. Download the Cool Cloud HVAC phone application.

NOTE: When new versions of Bluetooth Communication Software and Furnace Control Software are available, the phone application notifies the user. Software updates are classified

AS EITHER OPTIONAL OR MANDATORY AND INSTALLED BY USING THE PHONE APPLICATION. ENSURE ALL MANDATORY SOFTWARE UPDATES HAVE BEEN INSTALLED. REVIEW NOTES FOR OPTIONAL SOFTWARE UPDATES AND INSTALL IF NECESSARY.

3. Select the Non-Comm Outdoor Setting menu (0d5) using the on board push buttons or the Cool Cloud HVAC phone application. Select 1 AC for single stage Air Conditioners, 1HP for single stage heat pumps, 2 AC for two stage air conditioners and 2 HP for two stage Heat Pumps.
4. Go to the tonnage units menu (ton) and select the tonnage value that corresponds to the desired airflow for the outdoor unit. See the following table.

NOTE: FOR TWO STAGE NON-COMMUNICATING OUTDOOR UNITS, SYSTEM WILL STAGE AIRFLOW AUTOMATICALLY FOR LOW STAGE OPERATION.

Tonnage Selection	Airflow	Tonnage Selection	Airflow	Tonnage Selection	Airflow	Tonnage Selection	Airflow
1	400	2.3	920	3.6	1440	4.9	1960
1.1	440	2.4	960	3.7	1480	5	2000
1.2	480	2.5	1000	3.8	1520	5.1	2040
1.3	520	2.6	1040	3.9	1560	5.2	2080
1.4	560	2.7	1080	4	1600	5.3	2120
1.5	600	2.8	1120	4.1	1640	5.4	2160
1.6	640	2.9	1160	4.2	1680	5.5	2200
1.7	680	3	1200	4.3	1720	5.6	2240
1.8	720	3.1	1240	4.4	1760	5.7	2280
1.9	760	3.2	1280	4.5	1800	5.8	2320
2	800	3.3	1320	4.6	1840	5.9	2360
2.1	840	3.4	1360	4.7	1880	6	2400
2.2	880	3.5	1400	4.8	1920		

NOTE: THE SYSTEM WILL NOT PROVIDE AIRFLOWS ABOVE THE MAX AIRFLOW VALUE.

- 3 Ton Models = 1,400 CFM
- 4 Ton Models = 1,760 CFM
- 5 Ton Models = 2,200 CFM

5. Use the Cool Cloud HVAC phone application to configure/test furnace operations.

NOTE: THE PHONE APPLICATION CANNOT TEST A NON-COMMUNICATING OUTDOOR UNIT. THE THERMOSTAT WILL BE REQUIRED FOR OUTDOOR UNIT TESTING.

CHARGING

Charge the outdoor unit as required using the charging information provided with the outdoor equipment.

GAS FURNACE TESTING

a. Two stage operation using the Cool Cloud HVAC application:
   - Select the gas heat icon after entering the furnace menus.
   - Select any value less than 50% for low stage operation and any value greater than 50% for high stage operation.

6. Confirm thermostat heating and cooling calls function properly with equipment.

QUICK START GUIDE FOR GAS HEAT ONLY SETUP (NO OUTDOOR UNIT)

EXTREMELY IMPORTANT: The furnace only requires a single W input for 2 stage gas heat control. Internal algorithms will control staging of the gas furnace automatically.

1. Connect all necessary thermostat wires to the thermostat connector on the furnace control as shown in the following diagram.

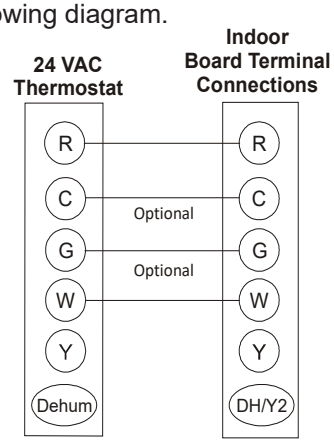

GAS HEAT ONLY
FIGURE 24

2. Download the Cool Cloud HVAC phone application and use it to configure / test furnace operations.

NOTE: WHEN NEW VERSIONS OF BLUETOOTH COMMUNICATION SOFTWARE AND FURNACE CONTROL SOFTWARE ARE AVAILABLE, THE PHONE APPLICATION NOTIFIES THE USER. SOFTWARE UPDATES ARE CLASSIFIED AS EITHER OPTIONAL OR MANDATORY AND INSTALLED BY USING THE PHONE APPLICATION. ENSURE ALL MANDATORY SOFTWARE UPDATES HAVE BEEN INSTALLED. REVIEW NOTES FOR OPTIONAL SOFTWARE UPDATES AND INSTALL IF NECESSARY.

GAS FURNACE TESTING

a. Two-stage Operation using the Cool Cloud HVAC application:
   - Select the gas heat icon after entering the furnace menus.

b. Select any value less than 50% for low stage operation and any value greater than 50% for high stage operation.

3. Confirm thermostat heating call functions properly with equipment.

Dehumidification

Dehumidification allows the furnace's circulator blower to operate at a reduced speed during a combined thermostat call for cooling demand with a parallel humidistat. This lower blower speed increases dehumidification of the conditioned air as it passes through the indoor coil. The control board is equipped with a 24 volt dehumidification input (DH) located on the thermostat wiring connector. The terminal can be configured to enable dehumidification when the input is energized or de-energized. When using an external dehumidistat, connect it between the R and DH terminals. If the humidistat closes on humidity rise or the thermostat energizes this terminal when dehumidification is required, set the control board "dHL" (Dehum Logic) menu setting to "HI " using the push buttons or Cool Cloud HVAC phone application. If the humidistat opens on humidity rise or the thermostat de-energizes this terminal when dehumidification is required, set the "dHL" (Dehum Logic) menu to "Lo" using the push buttons or Cool Cloud HVAC phone application.

Auxiliary Alarm Switch

The control is equipped with a 24VAC Aux Alarm to be used for a condensate switch install (designated by CONDENSATE IN/OUT on the control). By default, the connected AUX switch is normally closed and opens when the water level in the evaporator coil base pan reaches an undesirable level. The control responds by displaying an EEd error code and turning off the outdoor condensing unit. If the AUX switch is detected to be in the closed position for 30 seconds, normal operation resumes and the error message is no longer displayed.

Push Button Menu

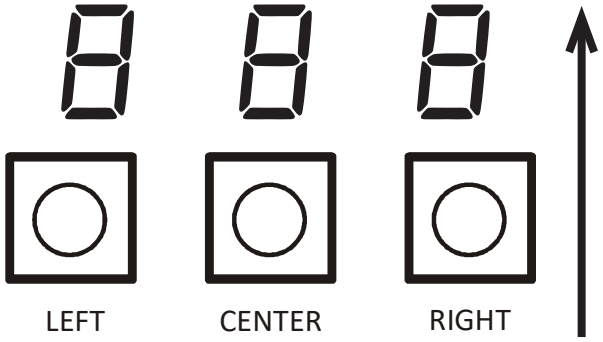

Figure 25

The furnace includes three on-board push buttons allowing users to navigate indoor and outdoor system menus. The Right and Left buttons allow the user to scroll through the main menus and to then scroll through available options within specific menus. The Center button is used to enter into a main menu and to then permanently select options within those menus.

NOTE: After scrolling to the desired option within a menu, that option may be flashing on the 7-segment displays. This indicates the option has not been officially selected. Pressing the Center button two times will select that option. The first press will stop the flashing. The second will make the selection official and return you to the main menu.

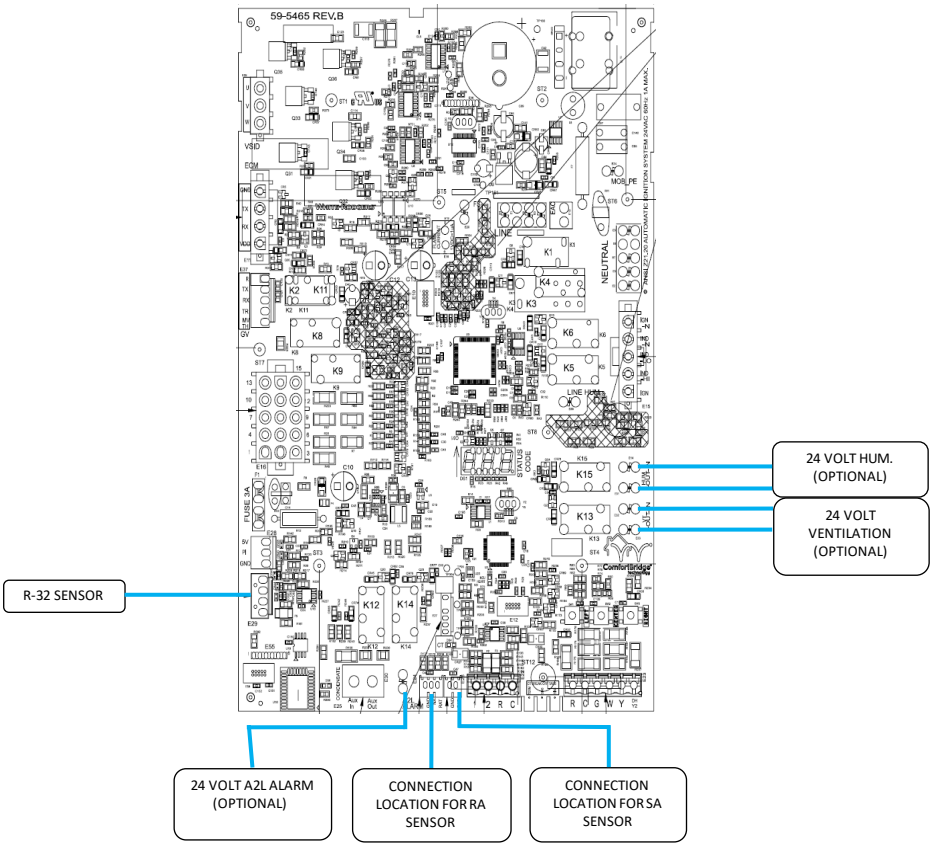

ACCESSORIES

Optional Field installed Supply Air & Return Air Temperature Sensors

Optional Supply Air Sensor 0130F00933 & Return Air Sensor 0130F00934 are available for purchase from your distributor.

Accessory Control (Humidifiers, Dehumidifiers, Ventilators)

If an external humidifier, dehumidifier or ventilator is installed, it may require airflow from the HVAC system to function properly.

1. Make sure the installed 24VAC thermostat is capable of controlling the accessory or accessories.
2. Connect the appropriate accessory control wires to the accessory devices from the thermostat (see thermostat manual for connection and setup instructions).
3. If the thermostat is capable of providing a continuous fan call (G signal) during accessory operation: Make sure to connect the thermostat G terminal to the G terminal on the indoor unit. Setup thermostat to ensure G signal is energized during accessory operation.

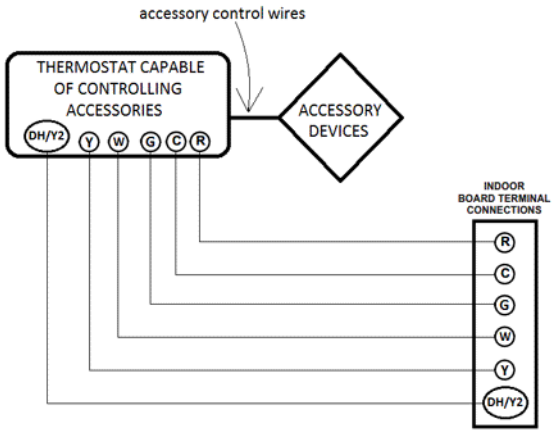

Figure 26

4. Select the appropriate fan only airflow for the accessory using the indoor unit push button menus or the Cool Cloud HVAC phone application.
5. Using the thermostat, independently test each accessory in addition to independently testing continuous fan mode.

Ramping Profiles

The variable-speed circulator offers four different ramping profiles. These profiles may be used to enhance cooling performance and increase comfort level. Select ramping profiles on the user menu.

- **Profile A** (1) provides only an OFF delay of one (1) minute at 100% of the cooling demand airflow.

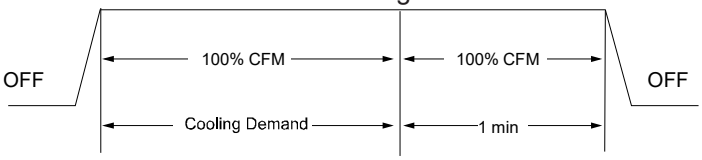

Figure 27

- **Profile B (2)** ramps up to full cooling demand airflow by first stepping up to 50% of the full demand for 30 seconds. The motor then ramps to 100% of the required airflow. A one (1) minute OFF delay at 100% of the cooling airflow is provided.

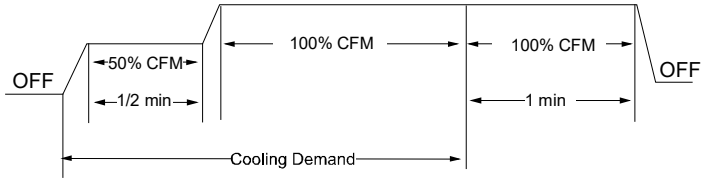

Figure 28

- **Profile C** (3) ramps up to 85% of the full cooling demand airflow and operates there for approximately 7 ½ minutes. The motor then steps up to the full demand airflow. Profile C also has a one (1) minute 100% OFF delay.

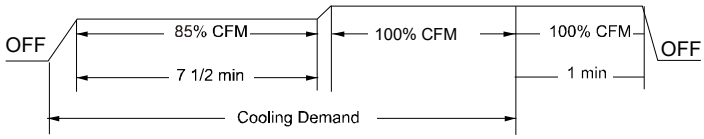

Figure 29

- **Profile D** (4) ramps up to 50% of the demand for ½ minute, then ramps to 85% of the full cooling demand airflow and operates there for approximately 7 ½ minutes. The motor then steps up to the full demand airflow. Profile D has a ½ minute at 50% airflow OFF delay.

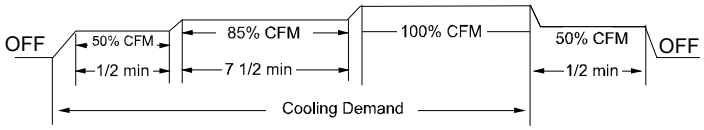

Figure 30

115 Volt Line Connection or Electronic Air Cleaner

WARNING

HIGH VOLTAGE
To avoid personal injury or death due to electrical shock, disconnect electrical power before servicing or changing any electrical wiring.

The accessory load specifications are as follows:

EAC	1.0 AMP maximum at 120 VAC

The furnace integrated control module is equipped with a line voltage accessory terminal for controlling power to an optional field supplied electronic air cleaner or any device required to operate in parallel with a circulating fan demand.

To connect an electronic air cleaner using the line voltage EAC terminal:

- Turn OFF power to the furnace before installing any accessories.
- Follow the air cleaner manufacturers' instructions for locating, mounting, grounding, and controlling accessories. Utilize ¼" quick connect terminals to make accessory wiring connections to the furnace integrated control module.
- Connect the hot terminal utilized for accessory operation to the EAC terminal and the neutral side of power to NEUTRAL bus on the integrated furnace control or the neutral connection in the furnace junction box.
- All field wiring must conform to applicable codes.
- If it is necessary for the installer to supply additional line voltage wiring to the inside of the furnace, the wiring must conform to all local codes, and have a minimum temperature rating of 105°C.
- All line voltage wire splices must be made inside the furnace junction box.

Low Voltage Ventilation

The Ventilation connections provide dry contact for field ventilator wiring connections. These connections are normally open and energize during the R-32 fault/alarm condition. VT IN and VT OUT connections are provided on the control board and are shown in the image below.

Low Voltage A2L Alarm

The A2L alarm connection provides 24VAC for field alarm wiring connections. These connections are normally open and energize during the R-32 fault/alarm condition. An A2L Alarm connection is provided on the control board and is shown in the image below.

Field Installed Accessories

Additional accessories that do not have dedicated terminals on the furnace control board may require an additional daughter board to be installed. Please refer to service manual on your product for more information.

NOTE: This furnace is equipped with a control board that is capable of monitoring for R-32 refrigeration leaks in the indoor refrigeration unit. Please verify that the R-32 sensor wire is plugged in to the furnace control board before startup, if applicable. If furnace is not paired with a R-32 refrigeration system, the default settings in the furnace control board will need to be changed. Please see the R-32 section for additional information.

STARTUP PROCEDURE & ADJUSTMENT

Furnace must have a 115 VAC power supply properly connected and grounded. Proper polarity must be maintained for correct operation. In addition to the following start-up and adjustment items, refer to further information in *Operational Checks* section.

Furnace Operation

Purge gas lines of air prior to startup. Be sure not purge lines into an enclosed burner compartment. Follow NFPA 54, National Fuel Gas Code for proper purging methods. In Canada, follow approved purging methods in CAN/CSA B149.1-15.

Check for leaks using an approved chloride-free soap and water solution, an electronic combustible gas detector, or other approved method. Verify that all required kits (propane gas, high altitude, etc.) have been appropriately installed.

Furnace Startup

1. Close the manual gas shutoff valve external to the furnace.
2. Turn off the electrical power to the furnace.
3. Set the room thermostat to the lowest possible setting.
4. Remove the burner compartment door.

NOTE: This furnace is equipped with an ignition device which automatically lights the burner. Do not try to light the burner by hand.

5. Move the furnace gas valve manual control to the OFF position.
6. Wait five minutes then smell for gas. Be sure check near the floor as some types of gas are heavier than air.
7. If you smell gas after five minutes, immediately follow the safety instructions in the *Safety Considerations* on page 3 of this manual. If you do not smell gas after five minutes, move the furnace gas valve manual control to the ON position.
8. Replace the burner compartment door.
9. Open the manual gas shutoff valve external to the furnace.
10. Turn on the electrical power to the furnace.
11. Adjust the thermostat to a setting above room temperature.
12. After the burners are lit, set the thermostat to desired temperature.

Furnace Shutdown

1. Set the thermostat to the lowest setting. The integrated control will close the gas valve and extinguish flame. Following a 15 second delay, the induced draft blower will be de-energized. After the blower off delay time expires, the blower de-energizes.
2. Remove the burner compartment door and move the furnace gas valve manual control to the OFF position.
3. Close the manual gas shutoff valve external to the furnace.
4. Replace the burner compartment door.

Gas Supply Pressure Measurement

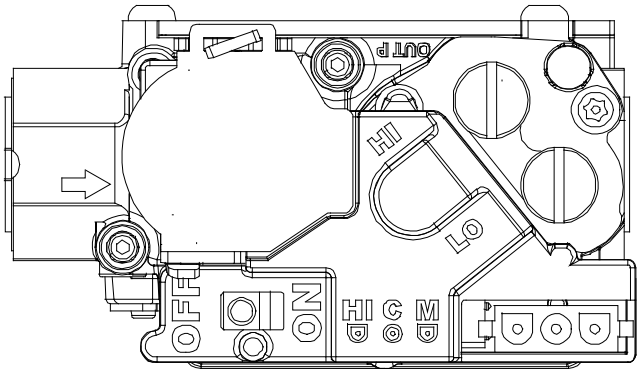

White-Rodgers Model 36J54 (Two-Stage)
Figure 31A

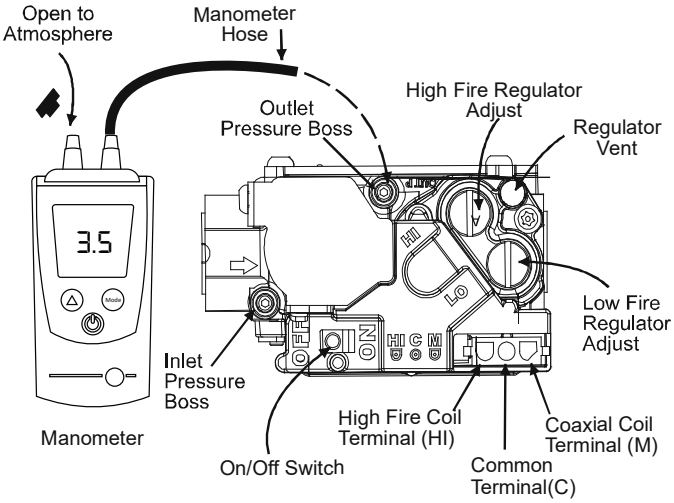

White-Rodgers Model 36J54 Connected to Manometer
Figure 31B

INLET GAS SUPPLY PRESSURE		
Natural Gas	Minimum: 4.5" w.c.	Maximum: 10.0" w.c.
Propane Gas	Minimum: 11.0" w.c.	Maximum: 13.0" w.c.

CAUTION

To prevent unreliable operation or equipment damage, the inlet gas supply pressure must be as specified on the unit rating plate with all other household gas fired appliances operating.

The line pressure supplied to the gas valve must be within the range specified below. The supply pressure can be measured at the gas valve inlet pressure tap or at a hose fitting installed in the gas piping drip leg. The supply pressure must be measured with the burners operating. To measure the gas supply pressure, use the following procedure.

1. Turn OFF gas to furnace at the manual gas shutoff valve external to the furnace.
2. Connect a calibrated manometer (or appropriate gas pressure gauge) at either the gas valve inlet pressure tap or the gas piping drip leg. See White-Rodgers 36J54 gas valve (Figure 31B) to locate the inlet pressure tap.

NOTE: If using the inlet pressure tap on the White-Rodgers 36J54 gas valve, then use the 36G/J Valve Pressure Check Kit, Part No. 0151K00000S.

3. Turn ON the gas supply and operate the furnace and all other gas consuming appliances on the same gas supply line.
4. Measure furnace gas supply pressure with burners firing. Supply pressure must be within the range specified in the *Inlet Gas Supply Pressure* table.

If supply pressure differs from table, make the necessary adjustments to pressure regulator, gas piping size, etc., and/or consult with local gas utility.

5. Turn OFF gas to furnace at the manual shutoff valve and disconnect manometer. Reinstall plug before turning on gas to furnace.
6. Turn OFF any unnecessary gas appliances stated in step three.

Gas Manifold Pressure Measurement and Adjustment

CAUTION

To prevent unreliable operation or equipment damage, the gas supply pressure must be as specified on the unit rating plate. Only minor adjustments should be made by adjusting the gas valve pressure regulator.

Only small variations in gas pressure should be made by adjusting the gas valve pressure regulator. The manifold pressure must be measured with the burners operating. To measure and adjust the manifold pressure, use the following procedure.

1. Turn OFF gas to furnace at the manual gas shutoff valve external to the furnace.
2. Turn off all electrical power to the system.
3. Outlet pressure tap connections:
   White-Rodgers 36J54 valve: Back outlet pressure test screw (inlet/outlet pressure tap) out one turn (counterclockwise, not more than one turn).
4. Attach a hose and manometer to outlet pressure tap .
5. Turn ON the gas supply.

NOTE: Follow this procedure to test the gas valve pressure at 100% firing rate.

Run High Fire

NOTE: The Cool Cloud phone application be used to assist with all functional tests. *See the quick start guide section for details.*

The furnace should be inspected by a qualified installer, or service agency at least once per year. This check should be performed at the beginning of the heating season. This will ensure that all furnace components are in proper working order and that the heating system functions appropriately. Pay particular attention to the following items. Repair or service as necessary.

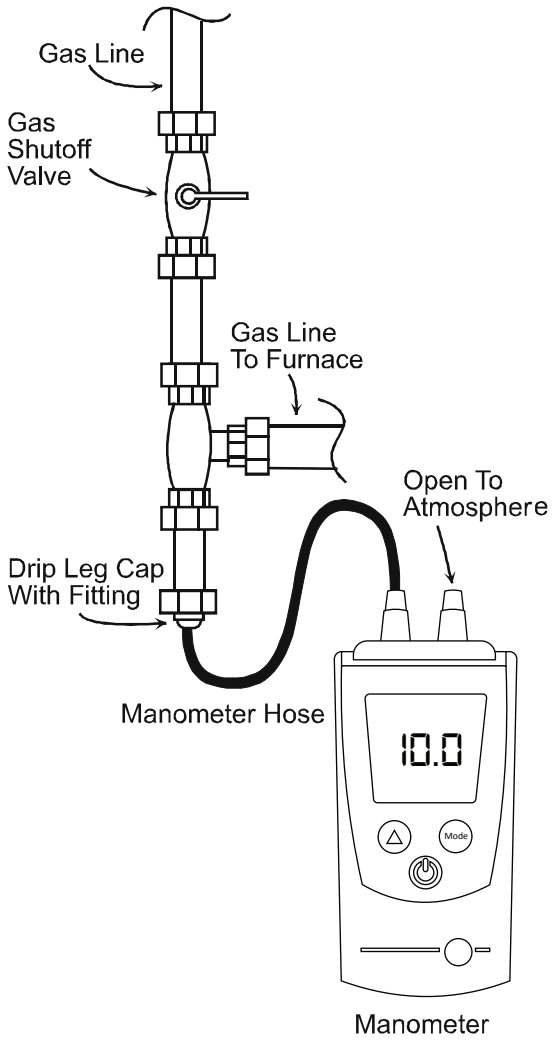

Measuring Inlet Gas Pressure (Alt. Method)
Figure 32

NOTE: When converting from natural gas to L.P. consult your distributor for proper conversion kit.

Manifold Gas Pressure			
Gas		Range	Nominal
Natural	Low Stage	1.6 - 2.2" w.c.	1.9" w.c.
	High Stage	3.2 - 3.8" w.c.	3.5" w.c.
Propane	Low Stage	5.7 - 6.3" w.c.	6.0" w.c.
	High Stage	9.7 - 10.3" w.c.	10.0" w.c.

R-32 INFORMATION

R-32 Function

This furnace is equipped with a control board that is capable of shutting off the gas heat and turning on the blower fan in case of an R-32 refrigerant leak in the indoor cooling unit. If the cooling unit that is paired with this furnace does not utilize R-32 as the refrigerant, the R-32 functionalities in the furnace control board will need to be turned off for the furnace to run properly.

R-32 function on the control board is ON by default. The R-32 function can be disabled through the furnace control by entering the A2L Function Enabled menu and selecting “no”. If A2L function is disabled, the furnace control will ignore all A2L functions. If A2L function is enabled, the control will monitor the R-32 sensor information.

To enter the A2L Function Enabled menu, press the left or right switch until LED displays “A2E”. Press the center switch and the LED will display the selected option (yes or no). Press the left of right switch to select one of the two options and press the middle switch to confirm the option.

R-32 Sensor wire routing

NOTE: Wiring routing must not interfere with circulator blower operation, filter removal or routine maintenance. Wire should not be routed near hot surfaces and should be protected form sharp edges. Extra precaution should be taken to avoid routing near the outlet flue pipe.

The R-32 Sensor wire coming from the indoor refrigeration unit will need to be routed into the furnace and connected to the connection point on the furnace control board. This wire should be routed alongside the thermostat wires through the low voltage openings in the left or right side of the furnace blower compartment. Please see the electrical section for the location of the R-32 Sensor connection on the control board.

R-32 Refrigerant Leak

If the R-32 sensor on the indoor cooling unit detects a specified concentration of R-32 refrigerant, the furnace will enter Mitigation Mode to dilute the refrigerant concentrations in case of a leak. In Mitigation Mode, the furnace will do the following:

1. **Display the A2L Refrigerant Leakage error code (EA0)**
2. **Shut down the gas operation**
3. **Energize the optional ventilation and alarm outputs.**
4. **Run the fan at max CFM airflow**

Once the R-32 sensor stops detecting a leak, the fan will continue to run for 5 minutes. After the 5 minutes, if there are no other alarms or faults, the control will de-energize the optional ventilation and alarm outputs and then go back to the original operating mode per the thermostat.

A2L Verification

The A2L Function Verification menu allows the installer to verify if the R-32 function operates properly. This menu simulates the refrigerant leak process and is only able to be used when there are no active alarms or faults. To verify the R-32 functions, enter the A2L Function Verification menu and select “YES”. To enter the A2L Function

Verification menu, press the left or right switch until LED displays “A2u”. Press the center switch and the LED will display the selected option (yes or no). Press the left of right switch to select one of the two options and press the middle switch to confirm the option. Once “YES” is selected, the furnace will do the following:

1. Display the A2L Refrigerant Leakage code (EA0)
2. Shut down the gas operation
3. Energize the optional ventilation and alarm outputs.
4. Run the fan at max CFM airflow

The control will exit the verification function if:

1. The 5 minute timeout expires or
2. An alarm or fault is detected or
3. The user turns OFF the A2L Function Verification.

Gas Input Rate Measurement (Natural Gas Only)

The actual gas input rate to the furnace must never be greater than that specified on the unit rating plate. To measure natural gas input using the gas meter, use the following procedure.

1. Turn OFF the gas supply to all other gas-burning appliances except the furnace.
2. While the furnace is operating at high fire rate, time and record one complete revolution of the gas meter dial, measuring the smallest quantity, usually the dial that indicates ½ cu. ft. per revolution. You will use this number to calculate the quantity of gas in cubic ft. if the furnace would consume if it ran steadily for one hour (3600 seconds).
3. If the ½ cu. ft. dial was used, multiply your number by two. EXAMPLE: If it takes23 seconds to complete one revolution of the ½ ft. dial (23 x 2 = 46).

This tells us that at this rate, it would take 46 seconds to consume one cu. ft. of gas. 3600 / 46 = 78.

This tells us that in one hour, the furnace would consume 78 cu. ft. of gas. The typical value range for 1 cu. ft. of natural gas is around 1000 BTU. Check with your gas utility, if possible. In this example, the furnace is consuming 78,000 BTUH.

NOTE: The final manifold pressure cannot vary by more than ± 0.3” w.c. for Natural and ± 0.5” for LP from the specified setting. Consult your local gas supplier if additional input rate adjustment is required.

4. Turn ON gas to and relight all other appliances turned off in step 1. Be certain that all appliances are functioning properly and that all pilot burners are operating.

Temperature Rise

Temperature rise must be within the range specified on the unit rating plate. An incorrect temperature rise may result in condensing in or overheating of the heat exchanger. An airflow and temperature rise table is provided in the Specification Sheet applicable to your model. Determine and adjust temperature rise as follows:

1. Operate furnace with burners firing for approximately ten minutes. Ensure all registers are open and all duct dampers are in their final (fully or partially open) position.
2. Place thermometers in the return and supply ducts as close to the furnace as possible. Thermometers must not be influenced by radiant heat by being able to “see” the heat exchanger.
3. Subtract the return air temperature from the supply air temperature to determine the air temperature rise. Allow adequate time for thermometer readings to stabilize.
4. Adjust temperature rise by adjusting the circulator blower speed. Increase blower speed to reduce temperature rise. Decrease blower speed to increase temperature rise. Refer to *Startup Procedure and Adjustment - Circulator Blower Speeds* for speed changing details.

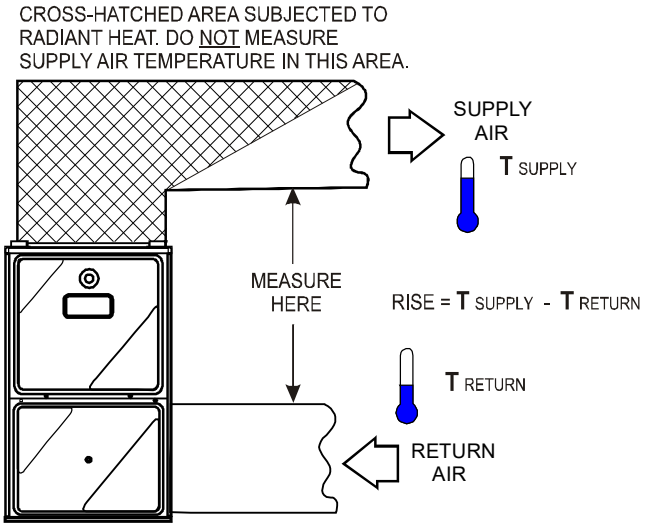

Temperature Rise Measurement
Figure 33

Diagnostics

Accessing the furnace’s diagnostic menu provides access to the last six faults detected by the furnace. Faults are stored most recent to least recent. Any consecutively repeated fault is stored a maximum of three times.
EXAMPLE: A clogged return air filter causes the furnace limit to trip repeatedly. The control will only store this fault the first three consecutive times the fault occurs.

NOTE: It is highly recommended that the fault history be cleared when performing maintenance or servicing the furnace.

NORMAL SEQUENCE OF OPERATION

Power Up

The normal power up sequence is as follows:

- 115 VAC power applied to furnace.
- Integrated control module performs internal checks.

- Integrated control module monitors safety circuits continuously.
- The furnace enters a three minute power up delay to make sure the system is setup properly. During this time thermostat calls will not be recognized.
- Furnace awaits call from thermostat. 7-segment LED's display Idl while awaiting call from thermostat.

Heating Mode

The normal operational sequence in heating mode is as follows:

- W thermostat contact closes, initiating a call for heat.
- Integrated control module performs safety circuit checks.
- Induced draft blower is energized on high speed for a 15-second prepurge.
- Induced draft blower steps to low speed following prepurge. Low stage pressure switch contacts are closed.
- Igniter warm up begins upon Inducer draft blower step to low speed and presence of closed low stage pressure switch contacts.
- Gas valve opens at end of igniter warm up period, delivering gas to burners and establishing flame.
- Integrated control module monitors flame presence. Gas valve will remain open only if flame is detected.
- Based on the furnace internal control algorithms the gas valve and induced draft blower may continue operating on low stage or both will change to high stage. After a power cycle, the first gas heat call will result in high stage operation.
- Circulator blower is energized on heat speed following the selected blower on delay and will begin to ramp up. Electronic air cleaner terminal is energized with circulator blower.
- Furnace is now operating on the specified stage determined by the internal control algorithm.
- Furnace runs, integrated control module monitors safety circuits continuously.
- If the internal algorithm changes the call from low heat to high heat, the integrated control module will immediately switch the induced draft blower, gas valve, and circulator blower to their high stage settings.
- If the internal algorithm changes the call from high heat to low heat, the control will immediately switch the induced draft blower and gas valve to their low stage settings. The circulator blower remains on high heating speed for 30 seconds before switching to the low heat circulating speed.
- The W terminal thermostat contacts open, which ends the call for heat.
- The gas valve closes, extinguishing the flame.
- Induced draft blower is de-energized following a 15 second post purge.
- Circulator blower continues running for the selected heat off delay period. The blower speed during this period depends on the last heat call provided by the thermostat. If the last call for heat was a call for low heat, the air circulator motor will run on low heat speed for the duration of the heat off delay period. If the last call for heat was a call for high heat, the air circulating motor will run on low heat speed for the duration of the heat off delay period. If the last call for heat was a call for high heat, the air circulating motor will run on the high heating speed for thirty (30) seconds and then switch to the low heating speed for the reminder of the heat off delay period.
- Circulator blower and electronic air cleaner terminal are de-energized.
- Circulator blower shuts off after the heat off delay period expires.
- Furnace awaits next call from thermostat.

OPERATIONAL CHECKS

The burner flames should be inspected with the burner compartment door installed. Flames should be stable, quiet, soft, and blue (dust may cause orange tips but they must not be yellow). Flames should extend directly outward from the burners without curling, floating, or lifting off. Flames must not impinge on the sides of the heat exchanger firing tubes.

SAFETY CIRCUIT DESCRIPTION

WARNING

Do not bypass safety devices.

A number of safety circuits are employed to ensure safe and proper furnace operation. These circuits serve to control any potential safety hazards and serve as inputs in the monitoring and diagnosis of abnormal function. These circuits are continuously monitored during furnace operation by the integrated control module.

Integrated Control Module

The integrated control module is an electronic device which, if a potential safety concern is detected, will take the necessary precautions and provide diagnostic information through an LED.

Primary Limit

The primary limit control is located on the partition panel and monitors heat exchanger compartment temperatures. It is a normally-closed (electrically), automatic reset, temperature-activated sensor. The limit guards against overheating as a result of insufficient conditioned air passing over the heat exchanger.

Auxiliary Limit
The auxiliary limit controls are located on or near the circulator blower and monitors blower compartment temperatures. They are a normally-closed (electrically), manual-reset sensors. These limits guard against overheating as a result of insufficient conditioned air passing over the heat exchanger.

Rollout Limit
The rollout limit controls are mounted on the burner/ manifold assembly and monitor the burner flame. They are normally closed (electrically), manual-reset sensors. These limits guard against burner flames not being properly drawn into the heat exchanger.

Pressure Switches
The pressure switches are normally-open (closed during operation) negative air pressure-activated switches. They monitor the airflow (combustion air and flue products) through the heat exchanger via pressure taps located on the induced draft blower and the coil front cover. These switches guard against insufficient airflow (combustion air and flue products) through the heat exchanger and/or blocked condensate drain conditions.

Flame Sensor
The flame sensor is a probe mounted to the burner/ manifold assembly which uses the principle of flame rectification to determine the presence or absence of flame.

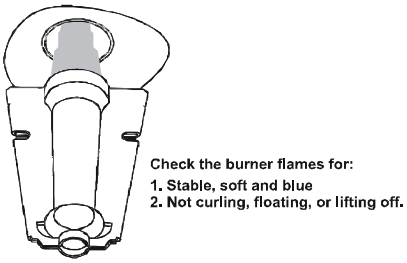

Burner Flame
Figure 34

TROUBLESHOOTING

Electrostatic Discharge (ESD) Precautions
NOTE: Discharge body's static electricity before touching unit. An electrostatic discharge can adversely affect electrical components.

Use the following precautions during furnace installation and servicing to protect the integrated control module from damage. By putting the furnace, the control, and the person at the same electrostatic potential, these steps will help avoid exposing the integrated control module to electrostatic discharge. This procedure is applicable to both installed and uninstalled (ungrounded) furnaces.

1. Disconnect all power to the furnace. Do not touch the integrated control module or any wire connected to the control prior to discharging your body's electrostatic charge to ground.
2. Firmly touch a clean, unpainted, metal surface of the furnace away from the control. Any tools held in a person's hand during grounding will be discharged.
3. Service integrated control module or connecting wiring following the discharge process in step 2. Use caution not to recharge your body with static electricity; (i.e., do not move or shuffle your feet, do not touch ungrounded objects, etc.). If you come in contact with an ungrounded object, repeat step 2 before touching control or wires.
4. Discharge your body to ground before removing a new control from its container. Follow steps 1 through 3 if installing the control on a furnace. Return any old or new controls to their containers before touching any ungrounded object.

Diagnostic Chart

WARNING

HIGH VOLTAGE
To avoid personal injury or death due to electrical shock, disconnect electrical power before performing any service or maintenance.

Refer to the *Troubleshooting Chart* in the back of this manual for assistance in determining the source of unit operational problems. The 7-segment LED displays will display an error code that may contain a letter and number. The error code may be used to assist in troubleshooting the unit.

Resetting From Lockout
Furnace lockout results when a furnace is unable to achieve ignition after three attempts during a single call for heat. It is characterized by a non-functioning furnace and an EE0 code displayed on the 7-segment display. If the furnace is in "lockout", it will (or can be) reset in any of the following ways.

1. Automatic reset. The integrated control module will automatically reset itself and attempt to resume normal operations following a one hour lockout period.
2. Manual power interruption. Interrupt 115 volt power to the furnace.
3. Manual thermostat cycle. Lower the thermostat so that there is no longer a call for heat for 1-20 seconds then reset to previous setting.

NOTE: If the condition which originally caused the lockout still exists, the control will return to lockout. Refer to the *Troubleshooting Chart* for aid in determining the cause.

MAINTENANCE

WARNING

To avoid electrical shock, injury or death, disconnect electrical power before performing any maintenance. If you must handle the igniter, handle with care. Touching the igniter element with bare fingers, rough handling or vibration could damage the igniter resulting in premature failure. Only a qualified servicer should ever handle the igniter.

Annual Inspection

The furnace should be inspected by a qualified installer, or service agency at least once per year. This check should be performed at the beginning of the heating season. This will ensure that all furnace components are in proper working order and that the heating system functions appropriately. Pay particular attention to the following items. Repair or service as necessary.

- Flue pipe system. Check for blockage and/or leakage. Check the outside termination and the connections at and internal to the furnace.
- Heat exchanger. Check for corrosion and/or buildup within the heat exchanger passageways.
- Burners. Check for proper ignition, burner flame, and flame signal.
- Wiring. Check electrical connections for tightness and/or corrosion. Check wires for damage.
- Filters.
- R-32 Sensor Wire. Check R-32 sensor wire connection for tightness and check wire for damage.

FILTERS

CAUTION

To ensure proper unit performance, adhere to the filter sizes given in the Recommended Minimum Filter Size Table or Specification Sheet applicable to your model.

Filter Maintenance

Improper filter maintenance is the most common cause of inadequate heating or cooling performance. Filters should be cleaned (permanent) or replaced (disposable) as required.

Filter Removal

Depending on the installation, differing filter arrangements can be applied. Filters can be installed in either the central return register or a side panel external filter rack (upflow only). A media air filter or electronic air cleaner can be used as an alternate filter. Follow the filter sizes given in the Recommended Minimum Filter size table to ensure proper unit performance.

To remove filters from an external filter rack in an upright upflow installation, follow the directions provided with external filter rack kit.

Horizontal Unit Filter Removal

Filters in horizontal installations are located in the central return register or the ductwork near the furnace.

To remove:

1. Turn OFF electrical power to furnace.
2. Remove filter(s) from the central return register or ductwork.
3. Replace filter(s) by reversing the procedure for removal.
4. Turn ON electrical power to furnace.

Media Air Filter or Electronic Air Cleaner Removal

Follow the manufacturer's directions for service.

Burners

Visually inspect the burner flames periodically during the heating season. Turn on the furnace at the thermostat and allow several minutes for flames to stabilize, since any dislodged dust will alter the flames normal appearance. Flames should be stable, quiet, soft, and blue (dust may cause orange tips but they must not be yellow). They should extend directly outward from the burners without curling, floating, or lifting off. Flames must not impinge on the sides of the heat exchanger firing tubes.

Induced Draft and Circulator Blowers

The bearings in the induced draft blower and circulator blower motors are permanently lubricated by the manufacturer. No further lubrication is required. Check motor windings for accumulation of dust which may cause overheating. Clean as necessary.

Flame Sensor (Qualified Servicer Only)

Under some conditions, the fuel or air supply can create a nearly invisible coating on the flame sensor. This coating acts as an insulator causing a drop in the flame sense signal. If the flame sense signal drops too low the furnace will not sense flame and will lock out. The flame sensor should be carefully cleaned by a qualified servicer using steel wool. Following cleaning, the flame sense signal should be as indicated in the Specifications Sheet.

Flue Passages (Qualified Servicer Only)

The heat exchanger flue passageways should be inspected at the beginning of each heating season.

BEFORE LEAVING AN INSTALLATION

- Cycle the furnace with the thermostat at least three times. Verify cooling and fan only operation.
- Review the Owner's Manual with the homeowner and discuss proper furnace operation and maintenance.
- Leave literature packet near furnace.

REPAIR AND REPLACEMENT PARTS

- When ordering any of the listed functional parts, be sure to provide the furnace model, manufacturing, and serial numbers with the order.
- Although only functional parts are shown in the parts list, all sheet metal parts, doors, etc. may be ordered by description.
- Parts are available from your distributor.

Functional Parts List-

Gas Valve	Blower Motor
Gas Manifold	Blower Wheel
Natural Gas Orifice	Blower Mounting Bracket
Propane Gas Orifice	Blower Cutoff
Igniter	Blower Housing
Flame Sensor	Inductor
Rollout Limit Switch	Heat Exchanger
Primary Limit Switch	Auxiliary Limit Switch
Pressure Switch	Integrated Control Module
Induced Draft Blower	Transformer
Door Switch	

MENU OPTIONS

LED Display	Menu Description
ASE	Aux (condensate switch enabled)
bSt	Enable or disable inverter boost operation. (compressor speed may increase when this feature is on) (inverter only)
btt	Boost mode will operate above this selected temperature. On = boost mode always on (default = 105°F) (inverter only)
CAP	Cooling Airflow Profile setting (default = profile D shown as 4)
CbP	Heat Pump compressor lockout temperature. Furnace will act as primary heat source below this temperature. (Default = 45°F)
CdL	Compressor off delay at the beginning and end of a defrost cycle.(default = 30 seconds)
CFd	Cooling Airflow Off Delay Time. (default = 60 seconds)
CLr	Resets all cooling settings to factory default.
Cnd	Cooling Airflow On Delay Time (default = 5 seconds)
Cr	Control Firmware Revision Number
CrG	Enable or disable inverter charge mode.
CrP	Select the range that includes the desired compressor RPS for inverter cooling operation. See inverter manual for menu options
CrS	Maximum Compressor RPS for cooling mode. (inverter only)
CSt	Percentage of high stage cooling airflow to run during low stageoperation. (default = 70%)
CtF	Cooling Airflow Trim (default 0%)
CtH	High Cooling Airflow Trim for inverter units. See inverter manual for menu options and defaults
CtI	Intermediate Cooling Airflow Trim for inverter units. See inverter manual for menu options and defaults
CtL	Low Cooling Airflow Trim for inverter units. See inverter manual for menu options and defaults
dFI	Compressor run time between defrost cycles. (default = 30 minutes) (2 stage units)
dHE	Enables or disables dehumidification feature in the outdoor unit. (default = Enabled)
dHL	Select "1" to enable dehumidification when the thermostat DH terminal is energized. Select "0" to enable dehumidification when the thermostat DH terminal is de-energized. (default = 1)
dHS	Gas heat operation during defrost. 1 = low heat, 2 (default) = high heat
FCL	View 6 most recent fault codes and Clear Fault Codes if desired (outdoor communicating units)
FdF	Force system into a defrost cycle (inverter units)
FSd	Constant Fan Speed as percent of maximum airflow. Default = 25%
GAF	Gas Heat Airflow (percentage of maximum system airflow)
GFd	Gas Heat Fan Off Delay (default = 90 seconds)
Gnd	Gas Heat Fan On Delay (default = 30 seconds)
GPt	Enables gas heat at 100% for pressure testing during commissioning.

LED Display	Menu Description
GSt	Percentage of high stage gas heating airflow to run during low stage gas heat operation. (default = 70%)
GtF	Gas Heat Airflow Trim (default = 0%)
Hdi	Maximum Compressor Run Time Between Defrost Cycles (default = 120 minutes)
HFd	Heat Pump Heating Airflow Off Delay Time (default = 60 seconds)
Hnd	Heat Pump Heating Airflow On Delay Time (default = 5 seconds)
HrP	Select the range that includes the desired compressor RPS for inverter heating operation. See inverter manual for menu options
HrS	Maximum Compressor RPS for Heating Mode (inverter only)
Hrt	Reset all heat pump heating settings to factory default.
HSt	Percentage of high stage heat pump heating airflow to run during low stage operation. (default = 70%)
HtF	Heat Pump Indoor Airflow Trim (default = 0%)
HtH	High Heating Airflow Trim for Inverter Units. See inverter manual for menu options and defaults
HtI	Intermediate Heating Airflow Trim for Inverter Units. See inverter manual for menu options and defaults
HtL	Low Heating Airflow Trim for Inverter Units. See inverter manual for menu options and defaults
LGF	View 6 most recent fault codes and clear all fault codes if desired (furnace)
Lrn	Restart communications between the indoor and outdoor unit.
OdS	Select the number of stages for the non-communicating outdoor unit. Default = OFF meaning no outdoor unit.
PPd	Enable Pump Down Mode
rFd	Resets furnace settings to factory defaults.
SCt	Maximum Current Option (system will limit capacity to percentage of maximum current) (default = 100%)
Sr	Control Shared Data Revision Number
Srt	Resets all outdoor unit settings to factory defaults.
SVt	System Verification Test (inverters only)
ton	Indoor Airflow for non-communicating outdoor units. (values based on 400CFM per ton) (default = 3.0 Ton)
Utr	Select Outdoor Unit Elevation (SL=same level, OL = outdoor lower, IL = indoor lower) Default = Outdoor Lower
CFS	1 = system will try to satisfy the thermostat quickly. 5 (default) = system will try to satisfy the thermostat more slowly.

MENU OPTIONS

LED Display	Menu Description
t9t	Menu is enabled if the CFS menu is set to 6. Select the target time the system will attempt to satisfy the thermostat.
SUP	Menu is enabled if the CFS menu is set to 6. Select the percentage past the target time when the system will transition to gas furnace operation during heat mode.
Ott	Menu is enabled if the CFS is set to 6. (the gas furnace will run during the next heat call if the heat pump fails to satisfy the custom target time for this number of consecutive cycles) (default = 20 cycles)
Utt	Menu is enabled if the CFS menu is set to 6. (if low stage gas heat is able to consecutively satisfy the thermostat under the set target time for this number of cycles, the system will transition to the heat pump for primary heating)
SdP	Menu is enabled if the CFS menu is set to 6. (this percentage will help determine when switching back to heat pump operation is appropriate. Default = 20%. If target time = 20 minutes, low stage furnace operation must satisfy the thermostat by less than 16 minutes. (target time - 20% default = 16 minutes).
F 10	Last 10 Faults
A2u	A2L Function Verification
A2E	A2L Function Enabled

STATUS CODES

LED Display	Description of System Status
1AC	Compressor Cooling, Low Stage (non-communicating units)
2AC	Compressor Cooling, High Stage (non-communicating units)
1AC	Compressor Heat, Low Stage (non-communicating units)
2AC	Compressor Heat, High Stage (non-communicating units)
AC	Compressor Cooling, Single-Stage (single stage non-comm. units)
AC 1	Compressor Cooling, Low Stage (communicating units)
AC2	Compressor Cooling, High Stage (communicating units)
dF 1	Defrost, Low Stage Gas Heat
dF2	Defrost, High Stage Gas Heat
dHU	Dehumidification
FAn	Constant Fan
HP	Compressor Heat, Single-Stage (single stage non-comm. units)
9H 1	Gas Heat, Low Stage
9H2	Gas Heat, High Stage
HP	Compressor Heat, Single-Stage (Single Stage Non Comm. Units)
HP 1	Compressor Heat, Low Stage (Communicating Units)
HP2	Compressor Heat, High Stage (Communicating Units)
I dL	Idle
UAC	Inverter Cooling
UHP	Inverter Heating

TROUBLESHOOTING CHART

Symptom	LED Status	Fault Description	Corrective Actions
Furnace fails to operate.	Ed0	Equipment lacks shared data.	Populate shared data set using memory card.
Normal operation.	Idl	Normal operation.	None
Furnace fails to operate. Integrated control module LED display provides no signal.	nonE	No 115 power to furnace or no 24 volt power to integrated control module. Blown fuse or tripped circuit breaker. Integrated control module is non-functional.	Restore high voltage power to furnace and integrated control module. Correct condition which caused fuse to open, replace fuse. Replace non-functional integrated control module.
Furnace fails to operate.	Eb0	Circulator blower motor is not running when it should be running.	Tighten or correct wiring connection. Verify continuous circuit through inductor. Replace if open or short circuit. Check circulator blower motor. Replace if necessary.
Furnace fails to operate.	Eb1	Integrated control module has lost communications with circulator blower motor.	Tighten or correct wiring connection. Check circulator blower motor. Replace if necessary. Check integrated control module. Replace if necessary.
Furnace fails to operate.	Eb2	Circulator blower motor horse power in shared data set does not match circulator blower motor horse power.	Verify circulator blower motor horse power match with nameplate, replace if necessary. Verify shared data set is correct for the specific model, re-populate data using correct memory card if required.
Furnace operates at reduced performance. Airflow delivered is less than expected.	Eb3	Circulator blower motor is operating in a power, temperature, or speed limiting condition.	Check filters for blockage, clean filters or remove obstruction. Check ductwork for blockage and verify all registers are fully open. Verify ductwork is appropriately sized for system, resize and/or replace ductwork if necessary.
Furnace fails to operate.	Eb4	Circulator blower motor senses a loss of rotor control. Circulator blower motor senses high current.	Check filters, filter grille, registers, duct system and equipment inlet/outlet for blockage, make necessary corrections and retest.
Furnace fails to operate.	Eb5	Circulator blower motor fails to start 10 consecutive times.	Check circulating blower for obstructions. Repair or replace blower motor or wheel as required. Check circulating blower shaft for proper rotation.
Furnace fails to operate.	Eb6	Circulator blower motor shuts down for over or under voltage condition. Circulator blower motor shuts down due to over temperature condition on power module.	Check voltage to furnace and verify within nameplate specified range.
Furnace fails to operate.	Eb7	Circulator blower motor lacks information to operate properly. Motor fails to start 40 consecutive times.	Check for locked rotor condition. Check integrated control module and verify it is populated with the correct shared data.

TROUBLESHOOTING CHART

Symptom	LED Status	Fault Description	Corrective Actions
Furnace operates at reduced performance or operates on low stage when high stage is expected.	E69	Airflow is lower than demanded.	Check filters for blockage, clean filters or remove obstruction. Check ductwork for blockage and verify all registers are fully open. Verify ductwork is appropriately sized for system, resize as necessary.
Furnace fails to operate.	E 100	Grounding fault Poor neutral connection.	Verify neutral wire connection to furnace & continuity to ground source.
Furnace fails to operate.	E 11	Open roll out switch.	Check for correct gas pressure. Check for correct burner alignment. Check for and correct burner restriction.
External return air temperature reading not visible on CoolCloud app.	E 15	Return Air Temperature Sensor Circuit is Open (External).	**NOTE:** Allow time as the control may take up to 90 seconds to detect sensors. Verify that the sensor probe is plugged in all the way. Verify that the sensor probe connector is properly crimped. Verify that resistance across the sensor probe is 10kΩ at 77°F. Resistance is lower at temperatures higher than 77°F. Resistance is higher at temperatures lower than 77°F. Replace PCB.
External return air temperature reading not visible on CoolCloud app.	E 16	Return Air Temperature Sensor Circuit is Shorted (External).	Check sensor probe terminals & conductors for electrical short. Check PCB connector for shorts if sensor short error reported when sensor probe is not plugged in. Replace PCB.

TROUBLESHOOTING CHART

Symptom	LED Status	Fault Description	Corrective Actions
Supply air temperature reading not visible on CoolCloud app.	E 17	Supply Air Temperature Sensor Circuit is Open (External).	**NOTE:** Allow time as the control may take up to 90 seconds to detect sensors. Verify that the sensor probe is plugged in all the way. Verify that the sensor probe connector is properly crimped. Verify that resistance across the sensor probe is 10kΩ at 77°F. Replace PCB.
Supply air temperature reading not visible on CoolCloud app.	E 18	Supply Air Temperature Sensor Circuit is Shorted (External).	Check sensor probe terminals & conductors for electrical short. Check PCB connector for shorts if sensor short error reported when sensor probe is not plugged in. Replace PCB.
Onboard return air temperature reading not visible on CoolCloud app.	E 19	Onboard return air temperature sensor is unplugged.	Power cycle the furnace, the control may take up to 90 seconds to detect sensors. Check PCB for any visible electrical or mechanical damage to onboard sensor (R311). Replace PCB.
Onboard return air temperature reading not visible on CoolCloud app.	E 1A	Onboard return air temperature sensor is shorted.	Power cycle the furnace, the control may take up to 90 seconds to detect sensors. Ensure there are no foreign objects on the PCB that could cause an electrical short at onboard sensor (R311). Replace PCB.
Furnace fails to operate.	Ed0	Data not yet on network.	Populate shared data set using memory card.
Operation different than expected or no operation.	Ed 1	Invalid memory card data.	Verify shared data set is correct for the specific model. Re-populate data using correct memory card if required.

TROUBLESHOOTING CHART

Symptom	LED Status	Fault Description	Corrective Actions
Furnace fails to operate	EE0	Furnace lockout due to an excessive number of ignition “retries” (3 total) Failure to establish flame Loss of flame after establishment	Locate and correct gas interruption Replace or realign igniter Check flame sense signal, clean sensor if coated or oxidized Check flue piping for blockage, proper length, elbows, and termination Verify proper induced draft blower performance
Furnace fails to operate	EE1	Low stage pressure switch circuit is closed at start of heating cycle Low stage pressure contacts sticking Short in pressure switch circuit wiring	Replace low stage pressure switch Repair short in wiring
Induced draft blower continuously with no furnace operation	EE2	Low stage pressure switch circuit is not closed Pressure switch hose blocked pinched, or connected improperly Blocked flue or weak induced draft blower Incorrect pressure switch set point or malfunctioning switch contacts Loose or improperly connected wiring	Inspect pressure switch hose, repair/replace if necessary Inspect flue piping for blockage, proper length, elbows, and termination Check induced draft blower performance, correct as necessary Check pressure switch operation, replace as needed Tighten or correct wiring connection
Circulator blower runs continuously with no furnace operation	EE3	Primary limit circuit is open Insufficient conditioned air over the heat exchanger Blocked filters, restrictive ductwork, improper circulator blower speed, or failed circulator blower motor Loose or improperly connected wiring in high limit circuit	Check filters and ductwork for blockage Clean filters or remove obstruction Check circulator blower speed and performance Correct speed or replace blower motor if necessary Tighten or correct wiring connection
Induced draft blower and circulator blower runs continuously No furnace operation	EE4	Flame sensed with no call for heat Short to ground in flame sense circuit Lingering burner flame Slow closing gas valve	Correct short at flame sensor or in flame sensor wiring Check for lingering or lazy flame Verify proper operation of gas valve
No furnace operation	EE5	Open fuse Short in low voltage wiring	Replace fuse Locate and correct short in low voltage wiring
Normal furnace operation	EE6	Flame sense micro amp signal is low Flame sensor is coated/oxidized Flame sensor incorrectly positioned in burner flame Lazy burner flame due to improper gas pressure or combustion air	Clean flame sensor if coated or oxidized Inspect for proper flame sensor alignment Compare current gas pressure to rating plate and adjust as needed

TROUBLESHOOTING CHART

Symptom	LED Status	Fault Description	Corrective Actions
Furnace fails to operate	EE7	Problem with igniter circuit Improperly connected or shorted igniter Poor unit ground Igniter relay fault on integrated control module	Check and correct wiring from integrated control module to igniter Diagnose and replace shorted igniter as needed Verify and correct unit ground wiring if needed Check igniter output from control, replace if necessary
Furnace fails to operate on high stage; furnace operates normally on low stage Induced draft blower operating	EE8	High stage pressure switch circuit is closed at start of heating cycle High stage pressure switch contacts sticking Shorts in pressure switch circuit wiring	Diagnose and replace high stage pressure switch if needed Repair short in wiring
Furnace fails to operate on high stage; furnace operates normally on low stage Induced draft blower operating	EE9	High stage pressure switch circuit is not closed	Inspect pressure switch hose, repair/replace if necessary Inspect flue for blockage, proper length, elbows, and termination Check induced draft blower performance, correct as necessary Tighten or correct wiring connection
Furnace fails to operate	EEA	Polarity of 115 volt AC is reversed Poor unit ground	Correct polarity, check and correct wiring if necessary Verify proper ground, correct if necessary
Furnace fails to operate	EEb	Gas valve is not energized when it should be External gas valve error	Check wiring in gas valve circuit Replace integrated control board
Furnace fails to operate	EEC	Gas valve is energized when it should not be Internal gas valve error	Check wiring in gas valve circuit Replaced integrated control board
Furnace stops heating and only the fan is operating	EAF	Furnace has lost communication with the R-32 sensor and the furnace is in mitigation mode.	Verify wire connection to R-32 sensor is not loose. Verify that the R-32 sensor wire is not damaged. Replace R-32 Sensor.
Furnace stops heating and only the fan is operating	EA0	R-32 sensor has detected a refrigerant leak and furnace is in mitigation mode.	Investigate the indoor coil for a refrigerant leak. Furnace will resume normal operation once a leak is not detected and the 5 minute delay period is over.
Furnace stops heating and only the fan is operating	EA1	R-32 sensor has detected a fault and the furnace is in mitigation mode.	Investigate the R-32 sensor. Replace the R-32 sensor.
Furnace stops heating and only the fan is operating	EA2	A2L relay in the furnace control board has detected a fault and the furnace is in mitigation mode.	Investigate A2L relay. Cycle power on the furnace. Replace integrated control board.

WIRING DIAGRAM

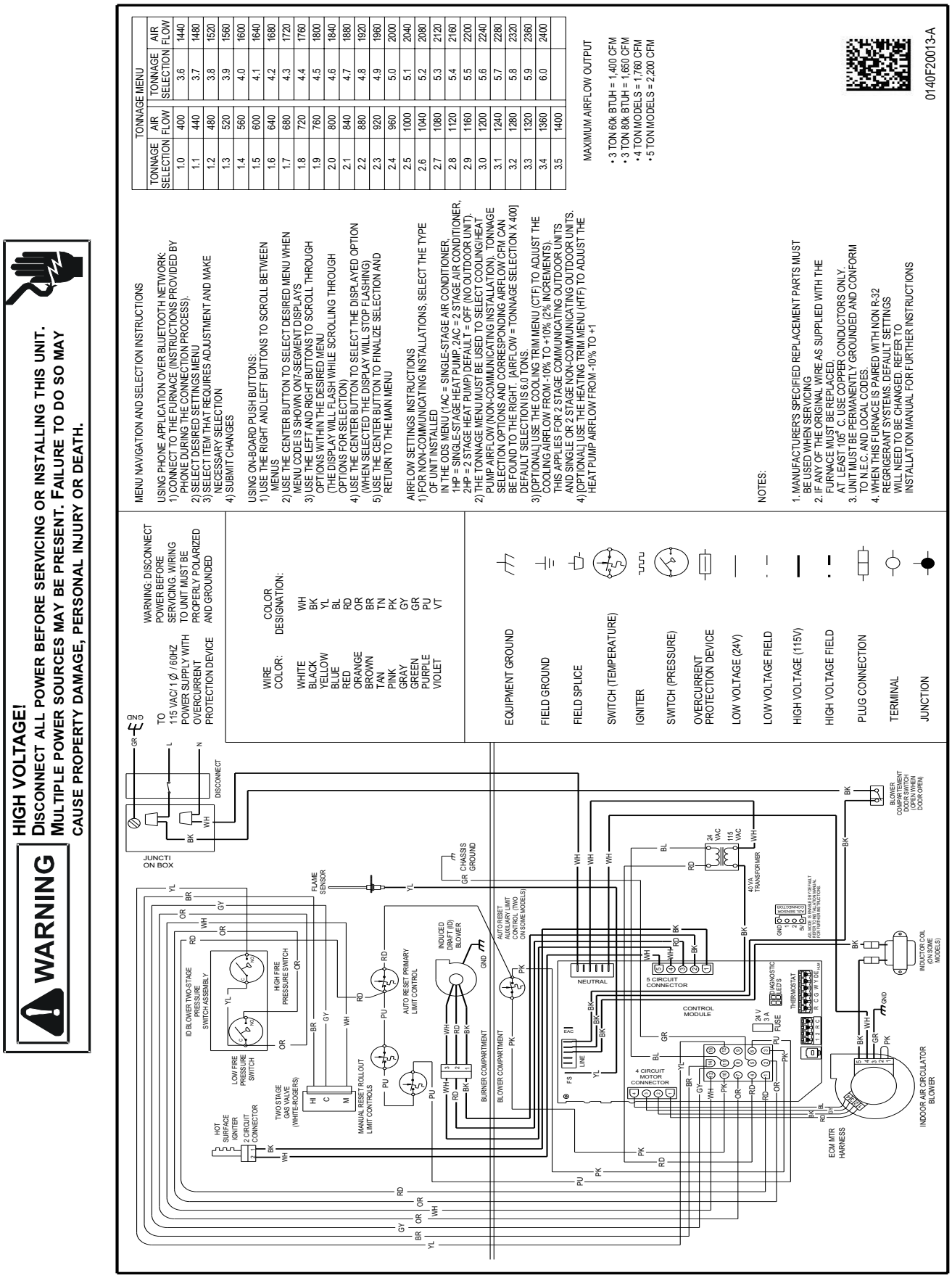

Wiring is subject to change. Always refer to the wiring diagram on the unit for the most up-to-date wiring.

START-UP CHECKLIST

Furnace				
	Model Number	_____		
	Serial Number	_____		
ELECTRICAL				
Line Voltage (Measure **L1 to N** and **N to Ground** Voltage)	L - N	_____		
	N - G	_____		
Secondary Voltage (Measure Transformer Output Voltage)	R - C	_____		
Blower Amps		_____		
BLOWER EXTERNAL STATIC PRESSURE				
Return Air Static Pressure		_____	IN. W.C.	
Supply Air Static Pressure		_____	IN. W.C.	
Total External Static Pressure (Ignoring +/- from the reading above, add total here)		_____	IN. W.C.	
TEMPERATURES				
Return Air Temperature (Dry bulb / Wet bulb)		_____	DB °F	_____ WB °F
Cooling Supply Air Temperature (Dry bulb / Wet bulb)		_____	DB °F	_____ WB °F
Heating Supply Air Temperature		_____	DB °F	
Temperature Rise		_____	DB °F	
Delta T (Difference between Supply and Return Temperatures)		_____	DB °F	
GAS PRESSURES				
Gas Inlet Pressure		_____	IN. W.C.	
Gas Manifold Pressure (Low Fire)		_____	IN. W.C.	
Gas Manifold Pressure (High Fire)		_____	IN. W.C.	
Gas Type (NG) = Natural Gas / (LP) = Liquid Propane		_____		
Additional Checks				
Check wire routings for any rubbing		_____		
Check for kinked pressure switch tubing.		_____		
Check flue elbow for alignment and clamp tightness.		_____		
Check screw tightness on blower wheel.		_____		
Check factory wiring and wire connections.		_____		
Check product for proper clearances as noted by installation instructions		_____		
Check R-32 sensor wire is connected properly (if applicable)		_____		
°F to °C formula: (°F - 32) divided by 1.8 = °C	**°C to °F formula: (°C multiplied by 1.8) + 32 = °F**			

CUSTOMER FEEDBACK
Daikin is very interested in all product comments.
Please fill out the feedback form on the following link:
https://daikincomfort.com/contact-us
You can also scan the QR code on the right to be directed to the feedback page.

PRODUCT REGISTRATION
Thank you for your recent purchase. Though not required to get the protection of the standard warranty, registering your product is a relatively short process, and entitles you to additional warranty protection, except that failure by California and Quebec residents to register their product does not diminish their warranty rights. The duration of warranty coverages in Texas and Florida differs in some cases.

For Product Registration, please register by following this link:
https://daikincomfort.com/owner-support/product-registration
You can also scan the QR code on the right to be directed to the Product Registration page.

Our continuing commitment to quality products may mean a change in specifications without notice.

©2024 ***DAIKIN COMFORT TECHNOLOGIES MANUFACTURING, L.P.***
19001 Kermier Rd., Waller, TX 77484
www.daikincomfort.com