INSTALLATION INSTRUCTIONS FOR

DR80SC ULTRA LOW NOx GAS VARIABLE SPEED FURNACE

CATEGORY I CATÉGORIE I

These furnaces comply with requirements embodied in the American National Standard/National Standard of Canada ANSI Z21.47·CSA-2.3 Gas Fired Central Furnaces.

Installer: Affix all manuals adjacent to the unit.

ATTENTION INSTALLING PERSONNEL

As a professional installer, you have an obligation to know the product better than the customer. This includes all safety precautions and related items.

Prior to actual installation, thoroughly familiarize yourself with this Instruction Manual. Pay special attention to all safety warnings. Often during installation or repair, it is possible to place yourself in a position which is more hazardous than when the unit is in operation.

Remember, it is **your** responsibility to install the product safely and to know it well enough to be able to instruct a customer in its safe use.

Safety is a matter of common sense...a matter of thinking before acting. Most dealers have a list of specific, good safety practices...follow them.

The precautions listed in this Installation Manual are intended as supplemental to existing practices. However, if there is a direct conflict between existing practices and the content of this manual, the precautions listed here take precedence.

RECOGNIZE THIS SYMBOL AS A SAFETY PRECAUTION

NOTE: Please contact your distributor or our website listed below for the applicable Specification Sheet referred to in this manual.

WARNING

ONLY PERSONNEL THAT HAVE BEEN TRAINED TO INSTALL, ADJUST, SERVICE, MAINTENANCE OR REPAIR (HEREINAFTER, "SERVICE") THE EQUIPMENT SPECIFIED IN THIS MANUAL SHOULD SERVICE THE EQUIPMENT.

THIS EQUIPMENT IS NOT INTENDED FOR USE BY PERSONS (INCLUDING CHILDREN) WITH REDUCED PHYSICAL, SENSORY OR MENTAL CAPABILITIES, OR LACK OF EXPERIENCE AND KNOWLEDGE, UNLESS THEY HAVE BEEN GIVEN SUPERVISION OR INSTRUCTION CONCERNING USE OF THE APPLIANCE BY A PERSON RESPONSIBLE FOR THEIR SAFETY.

CHILDREN SHOULD BE SUPERVISED TO ENSURE THAT THEY DO NOT PLAY WITH THE EQUIPMENT.

THE MANUFACTURER WILL NOT BE RESPONSIBLE FOR ANY INJURY OR PROPERTY DAMAGE ARISING FROM IMPROPER SUPERVISION, SERVICE OR SERVICE PROCEDURES. IF YOU SERVICE THIS UNIT, YOU ASSUME RESPONSIBILITY FOR ANY INJURY OR PROPERTY DAMAGE WHICH MAY RESULT. IN ADDITION, IN JURISDICTIONS THAT REQUIRE ONE OR MORE LICENSES TO SERVICE THE EQUIPMENT SPECIFIED IN THIS MANUAL, ONLY LICENSED PERSONNEL SHOULD SERVICE THE EQUIPMENT. IMPROPER SUPERVISION, INSTALLATION, ADJUSTMENT, SERVICING, MAINTENANCE OR REPAIR OF THE EQUIPMENT SPECIFIED IN THIS MANUAL, OR ATTEMPTING TO INSTALL, ADJUST, SERVICE OR REPAIR THE EQUIPMENT SPECIFIED IN THIS MANUAL WITHOUT PROPER SUPERVISION OR TRAINING MAY RESULT IN PRODUCT DAMAGE, PROPERTY DAMAGE, PERSONAL INJURY OR DEATH.

WARNING

DO NOT BYPASS SAFETY DEVICES

WARNING

THIS FURNACE MAY BE PAIRED WITH A COOLING UNIT THAT USES R-32 REFRIGERANT. IF THE COOLING UNIT PAIRED WITH THIS FURNACE DOES NOT USE R-32, THE R-32 FUNCTION IN THE FURNACE CONTROL BOARD NEEDS TO BE TURNED OFF. PLEASE SEE THE ELECTRICAL AND THE R-32 SECTIONS FOR MORE DETAILS. **REFRIGERANT SYSTEMS OTHER THAN 410-A OR R-32 MAY REQUIRE AN ADDITIONAL MITIGATION CONTROL BOARD. REFER TO THE INSTALLATION MANUAL OF THE INDOOR EVAPORATOR COIL TO DETERMINE INSTALLATION REQUIREMENTS FOR THAT SUPPLIER'S REFRIGERANT DETECTION SYSTEM.**

80% HEX

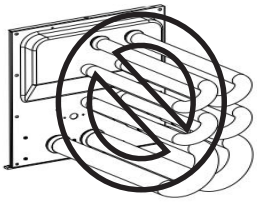

DO NOT LIFT PRODUCT USING HEAT EXCHANGER

Our continuing commitment to quality products may mean a change in specifications without notice.

©2024 ***DAIKIN COMFORT TECHNOLOGIES MANUFACTURING, L.P.***

19001 Kermier Rd., Waller, TX 77484
www.daikincomfort.com

IOD-2041
04/2024

This device, which was assembled by Daikin Comfort Technologies Manufacturing, L.P., contains a component that is classified as an intentional radiator. This intentional radiator has been certified by the FCC: FCC ID QOQBGM111. And this international radiator has an Industry Canada ID: IC 5123A-BGM111.
And this device meets the applicable Industry Canada technical specifications.

The manufacturer of the intentional radiator (model no. BGM111) is Silicon Laboratories Finland Oy, which can be contacted by calling 617-951-0200. (www.silabs.com)

This device complies with Part 15 of the FCC's Rules. Operation of this device is subject to two conditions:

(1) This device may not cause harmful interference; and
(2) This device must accept any interference received, including interference that may cause undesirable operation.

And this device meets the applicable Industry Canada technical specification.

The FCC responsible party is Daikin Comfort Technologies Manufacturing, L.P., and may be contacted by calling 713-861-2500, or at 19001 Kermier Rd., Waller TX 77484. (www.daikincomfort.com)

This equipment complies with FCC radiation exposure limits. To ensure compliance, human proximity to the antenna shall not be less than 20 cm during normal operations.

NOTE: This equipment has been tested and found to comply with the limits for a Class B digital device, pursuant to part 15 of the FCC Rules. These limits are designed to provide reasonable protection against harmful interference in a residential installation. This equipment generates, uses and can radiate radio frequency energy and, if not installed and used in accordance with the instructions, may cause harmful interference to radio communications. However, there is no guarantee that interference will not occur in a particular installation. If this equipment does cause harmful interference to radio or television reception, which can be determined by turning the equipment off and on, the user is encouraged to try to correct the interference by one or more of the following measures:

—Reorient or relocate the receiving antenna.
—Increase the separation between the equipment and receiver.
—Connect the equipment into an outlet on a circuit different from that to which the receiver is connected.
—Consult the dealer or an experienced radio/ TV technician for help.

WARNING

CHANGES OR MODIFICATIONS NOT EXPRESSLY APPROVED BY THE PARTY RESPONSIBLE FOR COMPLIANCE COULD VOID THE USER'S AUTHORITY TO OPERATE THE EQUIPMENT.

TABLE OF CONTENTS

Safety Considerations 3
Electrostatic Discharge (ESD) Precautions 6
Product Application 6
Location Requirements And Considerations 7
Combustion And Ventilation Air Requirements 10
Category I Venting (Vertical Venting) 10
Masonry Chimneys (Cat. I Furnaces Only) 11
Electrical Connections 11
Gas Supply And Piping 12
Ductwork 14
Quick Start Guide For Communicating Outdoor Units 16
Quick Start Guide For Non-Communicating Outdoor Units 17
Start-Up Procedure And Adjustment 21
Operational Checks 24
Safety Circuit Description 25
Maintenance 25
Cleaning (Qualified Servicer Only) 26
Before Leaving An Installation 26
Repair And Replacement Parts 26
Component ID 27
Menu Options 28
Status Codes 29
Troubleshooting Chart 30
Wiring Diagram 34
Start-Up Checklist 35

Safety Considerations

IMPORTANT NOTE: This unit is designed to meet the NOX requirement of 14Ng/J maximum as required by the South Coast Air Quality Management District and the San Joaquin Valley Air Pollution Control District, both in the State of California, and is intended for installation in those districts only.

This unit has a Control System that compensates for certain installation and environmental conditions. This unit must:

- Be properly installed, operated, and maintained per the instructions.
- Be serviced only by properly trained Service Technicians.

This unit is not approved for use with gasses other than Natural Gas.

Units that are not installed, maintained, or operated properly may result in "noisy" operation during the Heating Cycle. If this unit is making unusual or objectionable noises during the Heating Cycle, turn the heat off at the thermostat and contact a qualified Service organization right away.

Adhere to the following warnings and cautions when installing, adjusting, altering, servicing, or operating the furnace. To ensure proper installation and operation, thoroughly read this manual for specifics pertaining to the installation and application of this product.

This furnace is manufactured for use with natural gas only.

Install this furnace only in a location and position as specified in **LOCATION REQUIREMENTS & CONSIDERATIONS section and INSTALLATION POSITIONS section** of this manual.

Provide adequate combustion and ventilation air to the furnace as specified in **COMBUSTION & VENTILATION AIR REQUIREMENTS section of this manual.**

Combustion products must be discharged to the outdoors. Connect this furnace to an approved vent system only, as specified in **CATEGORY 1 VENTING** section of this manual.

Never test for gas leaks with an open flame. Use a commercially available soap solution made specifically for the detection of leaks to check all connections, as specified in **GAS SUPPLY AND PIPING** section of this manual.

Always install a furnace to operate within the furnace's intended temperature-rise range with a duct system which has external static pressure within the allowable range, as specified on the furnace rating plate and **OPERATIONAL CHECKS section** of these instructions.

When a furnace is installed so that supply ducts carry air circulated by the furnace to areas outside the space containing the furnace, the return air shall also be handled by duct(s) sealed to the furnace casing and terminating outside the space containing the furnace.

A gas-fired furnace for installation in a residential garage must be installed as specified in the **LOCATION REQUIREMENTS AND CONSIDERATIONS section** of this manual.

This furnace may be used as a construction site heater only if certain conditions are met. These conditions are listed in the **PRODUCT APPLICATION section** of this manual.

WARNING

To prevent personal injury or death due to improper installation, adjustment, alteration, service or maintenance, refer to this manual. For additional assistance or information, consult a qualified installer, servicer agency or the gas supplier.

WARNING

FIRE OR EXPLOSION HAZARD

Failure to follow the safety warnings exactly could result in serious injury, death or property damage.

Never test for gas leaks with an open flame.
Use a commercially available soap solution made specifically for the detection of leaks to check all connections. A fire or explosion may result causing property damage, personal injury or loss of life.

AVERTISSEMENT

RISQUE D'INCENDIE OU D'EXPLOSION

Si les consignes de sécurité ne sont pas suivies à la lettre, cela peut entraîner la mort, de graves blessures ou des dommages matériels.

Ne jamais vérifier la présence de fuites de gaz au moyen d'une flamme nue. Vérifier tous les raccords en utilisant une solution savonneuse commerciale conçue spécialement pour la détection de fuites. Un incendie ou une explosion risque de se produire, ce qui peut entraîner la mort, des blessures ou des dommages matériels.

WARNING

If the information in these instructions is not followed exactly, a fire or explosion may result causing property damage, personal injury or loss of life.
- Do not store or use gasoline or other flammable vapors and liquids in the vicinity of this or any other appliance.
- What to do if you smell gas:
- **Do not try to light any appliance.**
- **Do not touch any electrical switch; do not use any phone in your building.**
- **Immediately call your gas supplier from a neighbor's phone. Follow the gas supplier's instructions. If you cannot reach your gas supplier, call the fire department.**

- Installation and service must be performed by a qualified installer, service agency or the gas supplier.

WARNING

Heating unit should not be utilized without reasonable, routine, inspection, maintenance and supervision. If the building in which any such device is located will be vacant, care should be taken that such device is routinely inspected, maintained and monitored. In the event that the building maybe exposed to freezing temperatures and will be vacant, all water-bearing pipes should be drained, the building should be properly winterized, and the water source closed. In the event that the building may be exposed to freezing temperatures and will be vacant, any hydronic coil units should be drained as well and, in such case, alternative heat sources should be utilized.

WARNING

Should overheating occur or the gas supply fail to shut off, turn off the manual gas shutoff valve external to the furnace before turning off the electrical supply.

WARNING

Possible property damage, personal injury or death due to fire, explosion, smoke, soot, condensation, electrical shock or carbon monoxide may result from improper installation, repair operation, or maintenance of this product.

WARNING

To prevent personal injury or death due to asphyxiation, this furnace must be Category I vented. Do not vent using Category III venting. Provisions must be made for venting combustion products outdoors through a proper venting system. The length of flue pipe could be a limiting factor in locating the furnace.

WARNING

CARBON MONOXIDE POISONING HAZARD
Failure To Follow The Steps Outlined Below For Each Appliance Connected To The Venting System Being Placed Into Operation Could Result In Carbon Monoxide Poisoning Or Death. The Following Steps Shall Be Followed For Each Appliance Connected To The Venting System Being Placed Into Operation, While All Other Appliances Connected To The Venting System Are Not In Operation:
1) Seal Any Unused Openings In The Venting System.
2) Inspect The Venting System For Proper Size And Horizontal Pitch, As Required In The National Fuel Gas Code, Ansi Z223.1/nfpa 54 Or The Natural Gas And Propane Installation Code, Csa B149.1 And These Instructions. Determine That There Is No Blockage Or Restriction, Leakage, Corrosion And Other Deficiencies Which Could Cause An Unsafe Condition.
3) As Far As Practical, Close All Building Doors And Windows And All Doors Between The Space In Which The Appliance(s) Connected To The Venting System Are Located And Other Spaces Of The Building.
4) Close Fireplace Dampers.
5) Turn On Clothes Dryers And Any Appliance Not Connected To The Venting System. Turn On Any Exhaust Fans, Such As Range Hoods And Bathroom Exhausts, So They Are Operating At Maximum Speed. Do Not Operate A Summer Exhaust Fan.
6) Follow The Lighting Instructions. Place The Appliance Being Inspected Into Operation. Adjust The Thermostat So Appliance Is Operating Continuously.
7) Test For Spillage From Draft Hood Equipped Appliances At The Draft Hood Relief Opening After 5 Minutes Of Main Burner Operation. Use The Flame Of A Match Or Candle.
8) If Improper Venting Is Observed During Any Of The Above Tests, The Venting System Must Be Corrected In Accordance With The National Fuel Gas Code, Ansi Z223.1/nfpa 54 And/or Natural Gas And Propane Installation Code, Csa B149.1.
9) After It Has Been Determined That Each Appliance Connected To The Venting System Properly Vents When Tested As Outlined Above, Return Doors, Windows, Exhaust Fans, Fireplace Dampers And Any Other Gas-fired Burning Appliance To Their Previous Conditions Of Use.

AVERTISSEMENT

RISQUE D'INTOXICATION AU MONOXYDE DE CARBONE

Si les étapes décrites ci-dessous ne sont pas suivies pour chacun des appareils raccordés au système de ventilation au moment de sa mise en marche, cela peut entraîner une intoxication au monoxyde de carbone ou la mort. Les étapes suivantes doivent être suivies pour chacun des appareils raccordés au système de ventilation au moment de sa mise en marche, alors que tous les autres appareils raccordés au système de ventilation ne sont pas en marche:

1) Sceller toutes les ouvertures inutilisées du système de ventilation.
2) Inspecter le système de ventilation afin de vérifier si la taille et l'inclinaison par rapport à l'horizontale sont conformes aux exigences du National Fuel Gas Code, ANSI Z223.1/NFPA 54 ou du Code d'installation du gaz naturel et du propane, CSA B149.1 et à ces instructions. Vérifier qu'il n'y pas d'obstruction ou de pourraient entraîner une situation dangereuse.
3) Si possible, fermer toutes les portes et fenêtres du bâtiment ainsi que toutes les portes séparant l'endroit où se trouvent les appareils raccordés au système de ventilation et less autres zones du bâtiment.
4) Fermer le registre des foyers.
5) Mettre les sécheuses en marche ainsi que tous les autres appareils qui ne sont pas raccordés au systéme de ventilation. Mettre en marche tous les ventilateurs de tirage, comme celui des hottes de cuisine et des salles de bains, et les régler à la puissance maximale. Ne pas mettre en marche les ventilateurs d'été.
6) Suivre les instructions d'allumage. Mettre en marche l'appareil soumis à l'inspection. Régler le thermostat de manièr à ce que l'appareil fonctionne en continu.
7) Vérifier la présence de fuite au niveau de l'ouverture du coupe-tirage des appareils qui en sont dotés après 5 minutes de fontionnement du brûleur principal. Utiliser la flamme d'une allumette ou d'une bougie.
8) Si un problème de ventilation est observé pendant l'un des essaid décrits ci-dessus, des correctifs doivent être apportés au système de ventilation conformé National Fuel Gas Code, Ansi Z223.1/nfpa 54 And/or Natural Gas And Propane Installation Code, Csa B149.1.
9) Une fois qu'il été déterminé que chaque appareil raccordé au système de ventilation fontionne correctement au moyen des essais décrits ci-dessus, les portes, les fenêtres, les ventilateurs, les registres de foyer et tous les autres appareils de combustion alimentés au gaz doivent être remis dans leur état initial.

DANGER
PELIGRO

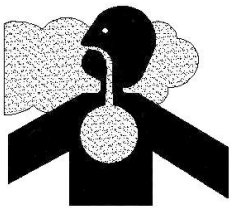

CARBON MONOXIDE POISONING HAZARD

Special Warning for Installation of Furnace or Air Handling Units in Enclosed Areas such as Garages, Utility Rooms or Parking Areas

Carbon monoxide producing devices (such as automobiles, space heater, gas water heater, etc.) should not be operated in enclosed areas such as unventilated garages, utility rooms or parking areas because of the danger of carbon monoxide (CO) poisoning resulting from the exhaust emissions. If a furnace or air handler is installed in an enclosed area such as a garage, utility room or parking area and a carbon monoxide producing device is operated therein, there must be adequate, direct outside ventilation.

This ventilation is necessary to avoid the danger of CO poisoning which can occur if a carbon monoxide producing device continues to operate in the enclosed area. Carbon monoxide emissions can be (re)circulated throughout the structure if the furnace or air handler is operating in any mode.

CO can cause serious illness including permanent brain damage or death.

B10259-216

RIESGO DE INTOXICACIÓN POR MONÓXIDO DE CARBONO

Advertencia especial para la instalación de calentadores ó manejadoras de aire en áreas cerradas como estacionamientos ó cuartos de servicio.

Los equipos ó aparatos que producen monóxido de carbono (tal como automóvil, calentador de gas, calentador de agua por medio de gas, etc) no deben ser operados en áreas cerradas debido al riesgo de envenenamiento por monóxido de carbono (CO) que resulta de las emisiones de gases de combustión. Si el equipo ó aparato se opera en dichas áreas, debe existir una adecuada ventilación directa al exterior.

Esta ventilación es necesaria para evitar el peligro de envenenamiento por CO, que puede ocurrir si un dispositivo que produce monóxido de carbono sique operando en el lugar cerrado.

Las emisiones de monóxido de carbono pueden circular a través del aparato cuando se opera en cualquier modo.

El monóxido de carbono puede causar enfermedades severas como daño cerebral permanente ó muerte.

B10259-216

RISQUE D'EMPOISONNEMENT AU MONOXYDE DE CARBONE

Avertissement special au sujet de l'installation d'appareils de chauffage ou de traitement d'air dans des endroits clos, tets les garages, les locaux d'entretien et les stationnementss.

Evitez de mettre en marche les appareils produisant du monoxyde de carbone (tels que les automobile, les appareils de chauffage autonome, etc.) dans des endroits non ventilés tels que les d'empoisonnement au monoxyde de carbone. Si vous devez faire fonctionner ces appareils dans un endroit clos, assures-vous qu'il y ait une ventilation directe provenant de l'exterier.

Cette ventilation est nécessaire pour éviter le danger d'intoxication au CO pouvant survenir si un appareil produisant du monoxyde de carbone continue de fonctionner au sein de la zone confinée.

Les émissions de monoxyde de carbone peuvent etre recircules dans les endroits clos, si l'appareil de chauffage ou de traitement d'air sont en marche.

Le monoxyde de carbone peut causer des maladies graves telles que des dommages permanents au cerveau et meme la mort.

B10259-216

Additional Safety Considerations

- This furnace is approved for Category I Venting only.
- Provisions must be made for venting combustion products outdoors through a proper venting system. The length of flue pipe could be a limiting factor in locating the furnace.

Shipping Inspection

All units are securely packed in shipping containers tested according to International Safe Transit Association specifications. The carton must be checked upon arrival for external damage. If damage is found, a request for inspection by carrier's agent must be made in writing immediately.

The furnace must be carefully inspected on arrival for damage and bolts or screws which may have come loose in transit. In the event of damage the consignee should:

1. Make a notation on delivery receipt of any visible damage to shipment or container.
2. Notify carrier promptly and request an inspection.
3. With concealed damage, carrier must be notified as soon as possible - preferably within five days.
4. File the claim with the following support documents within a nine month statute of limitations.

- Original or certified copy of the Bill of Lading, or indemnity bond.
- Original paid freight bill or indemnity in lieu thereof.
- Original or certified copy of the invoice, showing trade and other discounts or reductions.
- Copy of the inspection report issued by carrier's representative at the time damage is reported to carrier.

The carrier is responsible for making prompt inspection of damage and for a thorough investigation of each claim. The distributor or manufacturer will not accept claims from dealers for transportation damage.

Keep this literature in a safe place for future reference.

Electrostatic Discharge (ESD) Precautions

NOTE: Discharge your body's static electricity before touching unit. An electrostatic discharge can adversely affect electrical components.

Use the following precautions during furnace installation and servicing to protect the integrated control module from damage. By putting the furnace, the control, and the person at the same electrostatic potential, these steps will help avoid exposing the integrated control module to electrostatic discharge. This procedure is applicable to both installed and non-installed (ungrounded) furnaces.

1. Disconnect all power to the furnace. Do not touch the integrated control module or any wire connected to the control prior to discharging your body's electrostatic charge to ground.
2. Firmly touch a clean, unpainted, metal surface of the furnaces near the control. Any tools held in a person's hand during grounding will be discharged.
3. Service integrated control module or connecting wiring following the discharge process in step 2. Use caution not to recharge your body with static electricity; (i.e., do not move or shuffle your feet, do not touch ungrounded objects, etc.). If you come in contact with an ungrounded object, repeat step 2 before touching control or wires.
4. Discharge your body to ground before removing a new control from its container. Follow steps 1 through 3 if installing the control on a furnace. Return any old or new controls to their containers before touching any ungrounded object.

To The Installer

Before installing this unit, please read this manual thoroughly to familiarize yourself with specific items which must be adhered to, including but not limited to: unit maximum external static pressure, gas pressures, BTU input rating, proper electrical connections, circulating air temperature rise, minimum or maximum CFM, and motor speed connections, and venting. These furnaces are designed for Category I venting only.

WARNING

To prevent property damage, personal injury or death due to fire, do not install this furnace in a mobile home, trailer, or recreational vehicle.

Product Application

This furnace is primarily designed for residential home-heating applications. It is NOT designed or certified for use in mobile homes, trailers or recreational vehicles. Neither is it designed or certified for outdoor applications. The furnace **must** be installed indoors (i.e., attic space, crawl space, or garage area provided the garage area is enclosed with an operating door).

This furnace can be used in the following non-industrial commercial applications:

Schools, Office buildings, Churches, Retail stores, Nursing homes, Hotels/motels, Common or office areas

In such applications, the furnace must be installed with the following stipulations:

- It must be installed per the installation instructions provided and per local and national codes.
- It must be installed indoors in a building constructed on site.
- It must be part of a ducted system and not used in a free air delivery application.
- It must not be used as a "make-up" air unit.
- All other warranty exclusions and restrictions apply.

This furnace may be used as a construction site heater **ONLY** if the following conditions are met:

- The vent system is permanently installed per these installation instructions.
- A room thermostat is used to control the furnace. Fixed jumpers that provide continuous heating CANNOT be used and can cause long term equipment damage. Bi-metal thermostats, or any thermostat affected by vibration must not be used during construction.
- Return air ducts are provided and sealed to the furnace.
- A return air temperature range between 60°F (16°C) and 80°F (27°C) is maintained.
- Air filters are installed in the system and replaced daily during construction and upon completion of construction.
- The input rate and temperature rise are set per the furnace rating plate.
- 100% outside air must be used for combustion during construction. Temporary ducting may be used to supply outside air to the furnace for combustion – do not connect this duct directly to the furnace. Size this duct according to NFPA 54/ANSI Z223.1 section for Combustion and Ventilation Air.
- The furnace heat exchanger, components, duct system, air filters and evaporator coils are thoroughly cleaned following final construction clean up by a qualified person.
- All furnace operating conditions (including ignition, input rate, temperature rise and venting) are verified by a qualified person according to these installation instructions.
- Furnace doors must be in place on the furnace while the furnace is operating in any mode.

Damage or repairs due to failure to comply with these requirements are not covered under the warranty.

To ensure proper furnace operation, install, operate and maintain the furnace in accordance with these installation and operation instructions, all local building codes and ordinances. In their absence, follow the latest edition of the National Fuel Gas Code (NFPA 54/ANSI Z223.1), local plumbing or waste water codes, and other applicable codes.

A copy of the National Fuel Gas Code (NFPA 54/ANSI Z223.1) can be obtained from any of the following:

American National Standards Institute
25 West 43rd Street, 4th Floor
New York, NY 10036

National Fire Protection Association
1 Batterymarch Park
Quincy, MA 02169-7471

CSA International
8501 East Pleasant Valley
Cleveland, OH 44131

Additional helpful publications available from the NFPA are, NFPA 90A - Installation of Air Conditioning and Ventilating System and NFPA 90B - Warm Air Heating and Air Conditioning System.

The rated heating capacity of the furnace should be greater than or equal to the total heat loss of the area to be heated. The total heat loss should be calculated by an approved method or in accordance with “ASHRAE Guide” or “Manual J-Load Calculations” published by the Air Conditioning Contractors of America.

Location Requirements and Considerations

WARNING

To prevent possible equipment damage, property damage, personal injury or death, the following bullet points must be observed when installing this unit.

Follow the instructions listed below when selecting a furnace location. Refer also to the guidelines provided in *Combustion and Ventilation Air Requirements.*

- Centrally locate the furnace with respect to the proposed or existing air distribution system.
- Ensure the temperature of the return air entering the furnace is between 55°F and 100°F when the furnace is heating.
- Provisions must be made for venting combustion products outdoors through a proper venting system. The length of flue pipe could be a limiting factor in locating the furnace.
- Ensure adequate combustion air is available for the furnace. Improper or insufficient combustion air can expose building occupants to gas combustion products that could include carbon monoxide. Refer to *Combustion and Ventilation Air Requirements.*
- The furnace must be level. If the furnace is to be set on a floor that may become wet or damp at times, the furnace should be supported above the floor on a concrete base sized approximately 1-1/2” larger than the base of the furnace.
- Ensure upflow or horizontal furnaces are not installed directly on carpeting, or any other combustible material. The only combustible material allowed is wood.
- Exposure to contaminated combustion air will result in safety and performance-related problems. Do not install the furnace where the combustion air is exposed to the following substances:

  permanent wave solutions
  chlorinated waxes or cleaners
  chlorine-based swimming pool chemicals
  carbon tetrachloride
  water softening chemicals
  swimming pool chemicals
  deicing salts or chemicals
  halogen type refrigerants
  printing inks
  cleaning solutions (such as perchloroethylene)
  paint removers

varnishes
hydrochloric acid
cements and glues
antistatic fabric softeners for clothes dryers
masonry acid washing materials

- If the furnace is used in connection with a cooling unit, install the furnace upstream or in parallel with the cooling unit coil. Premature heat exchanger failure will result if the cooling unit coil is placed ahead of the furnace.

  For vertical (upflow) applications, the minimum cooling coil width shall not be less than furnace width minus 1". Additionally, a coil installed above an upflow furnace may be the same width as the furnace or may be one size larger than the furnace. Example: a "C" width coil may be installed with a "B" width furnace.

  For upflow applications, the front of the coil and furnace must face the same direction.
- If the furnace is installed in a residential garage, position the furnace so that the burners and ignition source are located not less than 18 inches above the floor. Protect the furnace from physical damage by vehicles.
- If the furnace is installed horizontally, ensure access doors are not on the "up/top" or "down/bottom" side of the furnace.
- Do not connect this furnace to a chimney flue that serves a separate appliance designed to burn solid fuel.

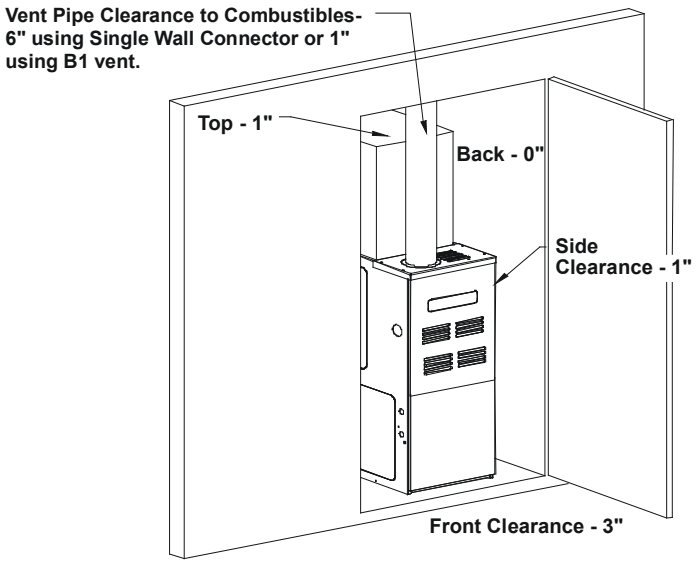

Figure 1

- Adequate combustion/ventilation air must be supplied to the closet. Improper or insufficient combustion air can expose building occupants to gas combustion products that could include carbon monoxide.
- Furnace must be **completely** sealed to floor or base. Combustion/ ventilation air supply pipes must terminate 12" from top of closet and 12" from floor of closet. DO NOT remove solid base plate for side return.
- Return air ducts must be **completely** sealed to the furnace and terminate outside the enclosure surfaces.

Clearances and Accessibility

NOTE: For servicing or cleaning, a 24" front clearance is required. Unit connections (electrical, flue and drain) may necessitate greater clearances than the minimum clearances listed above. In all cases, accessibility clearance must take precedence over clearances from the enclosure where accessibility clearances are greater.

Clearance in accordance with local installation codes, the requirements of the gas supplier and the manufacturer's installation instructions.
Dégaugement conforme aux codes d'installation locaux, aux exigences du fournisseur de gaz et aux instructions d'installation du fabricant.

VENT		SIDES	FRONT	BACK	TOP (PLENUM)
B1-VENT	SINGLE				
1"	6"	1"	3"	0"	1"

Top clearance for horizontal configuration - 1"
Table 1

Installations must adhere to the clearances to combustible materials to which this furnace has been design certified. The minimum clearance information for this furnace is provided on the unit's clearance label. These clearances must be permanently maintained. Clearances must also accommodate an installation's gas, electrical, and drain line connections.

NOTE: In addition to the required clearances to combustible materials, a minimum of 24" service clearance must be available in front of the unit.

Installation Positions

The DR80SC furnace may be installed in an upright position or horizontal on either the left or right side panel. Do not install this furnace on its back. For vertical installations, return air ductwork may be attached to the side panel(s) and/ or basepan. For horizontal installations, return air ductwork must be attached to the basepan. Contact your distributor for proper airflow requirements and number of required ductwork connections. Refer to, "Recommended Installation Positions" for appropriate installation positions, ductwork connections, and resulting airflow arrangements.

NOTE: Ductwork must never be attached to the back of the furnace.

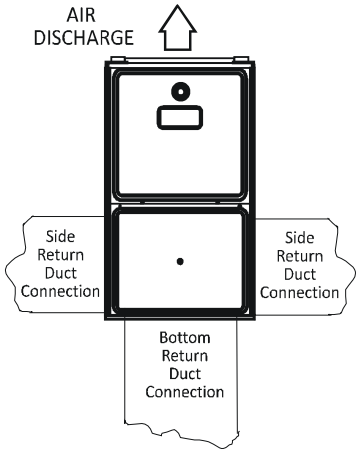

UPFLOW UPRIGHT

Figure 2

Horizontal Installation

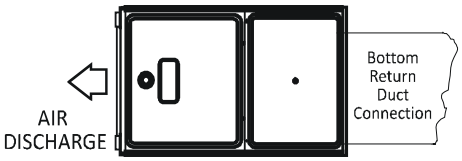

UPFLOW HORIZONTAL LEFT AIR DISCHARGE

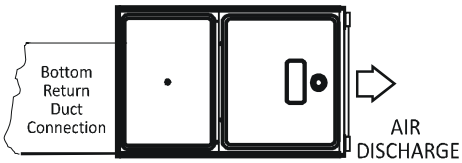

UPFLOW HORIZONTAL RIGHT AIR DISCHARGE

Recommended Installation Positions

Figure 3

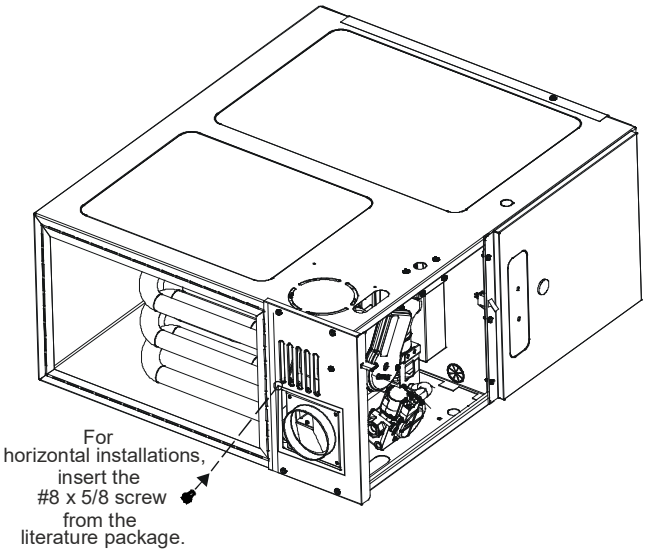

Figure 4

Line contact to framing is permitted when installed in the horizontal configuration. Line contact is defined as the portion of the cabinet that is formed by the intersection of the top and side. ACCESSIBILITY CLEARANCE, WHERE GREATER, SHOULD TAKE PRECEDENCE OVER MINIMUM FIRE PROTECTION CLEARANCE. A gas-fired furnace for installation in a residential garage must be installed so that the ignition source and burners are located not less than eighteen inches (18") above the floor and is protected or located to prevent physical damage by vehicles. A gas furnace must not be installed directly on carpeting, tile, or other combustible materials other than wood flooring.

Furnace Suspension

If suspending the furnace from rafters or joist, use 3/8" threaded rod and 2"x2"x3/8" angle iron as shown below. The length of rod will depend on the application and the clearances necessary.

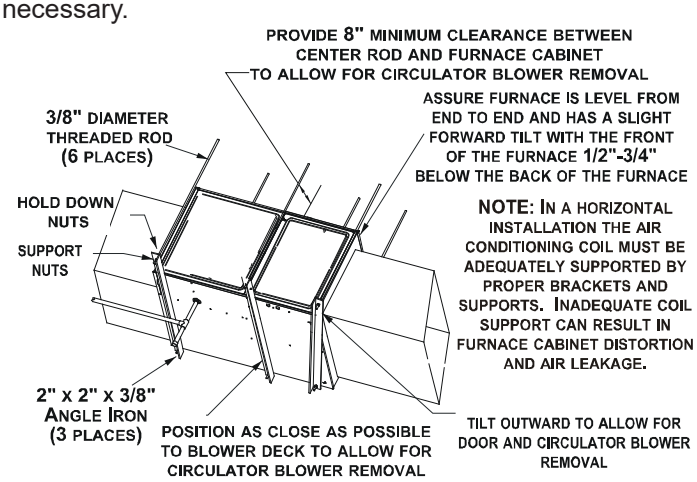

Suspended Furnace

Figure 5

Existing Furnace Removal

NOTE: When an existing furnace is removed from a venting system serving other appliances, the venting system may be too large to properly vent the remaining attached appliances.

The following vent testing procedure is reproduced from the **American National Standard/National Standard of Canada for Gas-Fired Central Furnaces ANSI Z21.47-Latest Edition, CSA-2.3-Latest Edition Section 1.23.1.** The following steps shall be followed with each appliance connected to the venting system placed in operation, while any other appliances connected to the venting system are not in operation:

a. Seal any unused openings in the venting system;

b. Inspect the venting system for proper size and horizontal pitch, as required by the National Fuel Gas Code, ANSI Z223.1 and these instructions. Determine that there is no blockage or restriction, leakage, corrosion and other deficiencies which could cause an unsafe condition;

c. In so far as practical, close all building doors and

windows and all doors between the space in which the appliance(s) connected to the venting system are located and other spaces of the building. Turn on clothes dryers and any appliance not connected to the venting system. Turn on any exhaust fans, such as range hoods and bathroom exhausts, so they shall operate at maximum speed. Do not operate a summer exhaust fan. Close fireplace dampers;

d. Follow the lighting instructions. Place the appliance being inspected in operation. Adjust thermostat so appliance shall operate continuously;

e. Test for draft hood equipped appliance spillage at the draft hood relief opening after 5 minutes of main burner operation. Use the flame of a match or candle;

f. After it has been determined that each appliance connected to the venting system properly vents when tested as outlined above, return doors, windows, exhaust fans, fireplace dampers and any other gas burning appliance to their previous conditions of use;

g. If improper venting is observed during any of the above tests, the common venting system must be corrected.

Corrections must be in accordance with the latest edition of the National Fuel Gas Code NFPA 54/ANSI Z223.1.

If resizing is required on any portion of the venting system, use the appropriate table in the latest edition of the National Fuel Gas Code ANSI Z223.1.

Thermostat Location

The thermostat should be placed approximately five feet from the floor on a vibration-free, inside wall in an area having good air circulation. Do not install the thermostat where it may be influenced by any of the following:

- Drafts, or dead spots behind doors, in corners, or under cabinets.
- Hot or cold air from registers.
- Radiant heat from the sun.
- Light fixtures or other appliances.
- Radiant heat from a fireplace.
- Concealed hot or cold water pipes, or chimneys.
- Unconditioned areas behind the thermostat, such as an outside wall.

Consult the instructions packaged with the thermostat for mounting instructions and further precautions.

Combustion and Ventilation Air Requirements

WARNING

To avoid property damage, personal injury or death, sufficient fresh air for proper combustion and ventilation of flue gases must be supplied. Most homes require outside air be supplied into the furnace area.

Improved construction and additional insulation in buildings have reduced heat loss by reducing air infiltration and escape around doors and windows. These changes have helped in reducing heating/cooling costs but have created a problem supplying combustion and ventilation air for gas fired and other fuel burning appliances. Appliances that pull air out of the house (clothes dryers, exhaust fans, fireplaces, etc.) increase the problem by starving appliances for air.

House depressurization can cause back drafting or improper combustion of gas-fired appliances, thereby exposing building occupants to gas combustion products that could include carbon monoxide.

If this furnace is to be installed in the same space with other gas appliances, such as a water heater, ensure there is an adequate supply of combustion and ventilation air for all appliances. Refer to the latest edition of the National Fuel Gas Code NFPA 54/ANSI Z223.1 or applicable provisions of the local building codes for determining the combustion air requirements for the appliances.

This furnace must use indoor air for combustion. It cannot be installed as a direct vent (i.e., sealed combustion) furnace.

Most homes will require outside air be supplied to the furnace area by means of ventilation grilles or ducts connecting directly to the outdoors or spaces open to the outdoors such as attics or crawl spaces. A furnace installed in a confined space (i.e., a closet or utility room) must have two ventilation openings with a total minimum free area of 0.25 square inches per 1,000 BTU/hr of furnace input rating. Refer to Specification Sheet applicable to your model for minimum clearances to combustible surfaces. One of the ventilation openings must be within 12” of the top; the other opening must be within 12” of the bottom of the confined space. In a typical construction, the clearance between the door and door frame is usually adequate to satisfy this ventilation requirement.

Category I Venting (Vertical Venting)

WARNING

To prevent possible personal injury or death due to asphyxiation, this furnace must be Category I vented. Do not vent using Category III venting.

Category I Venting is venting at a non-positive pressure. A furnace vented as Category I is considered a fan-assisted appliance and the vent system does not have to be “gas tight.” **NOTE:** Single stage gas furnaces with induced draft blowers draw products of combustion through a heat exchanger allowing, in some instances, common venting with natural draft appliances (i.e. water heaters). All installations must be vented in accordance with the latest edition of the National Fuel Gas Code NFPA 54/ANSI Z223.1 .

Note: The vertical height of the category 1 venting system must be at least as great as the horizontal length of the vertical system.

WARNING

To prevent possible personal injury or death due to asphyxiation, common venting with other manufacturer's induced draft appliances is not allowed.

The minimum vent diameter for the Category I venting system is as shown:

Model	Minimum Vent
	Upflow
60	4 inch
80	4 inch

Table 2

Under some conditions, larger vents than those shown above may be required or allowed. *When an existing furnace is removed from a venting system serving other appliances*, the venting system may be too large to properly vent the remaining attached appliances.

Masonry Chimneys

WARNING

Possibility of property damage, personal injury or death damaging condensation can occur inside masonry chimneys when a single fan-assisted Category I appliance (80% AFUE furnace) is vented without adequate dilution air. Do not connect an 80% furnace to a masonry chimney unless the furnace is common vented with a draft hood equipped appliance or the chimney is lined with a metal liner or Type B metal vent. All installations using masonry chimneys must be sized in accordance with the appropriate venting tables. If an 80% furnace is common vented with a draft hood equipped appliance, the potential for condensation damage may still exist with extremely cold conditions, long vent connectors, exterior chimneys, or any combination of these conditions. The rist of condensation damage is best avoided by using masonry chimney as a pathway for properly sized metal liner or Type B metal vent.

Masonry Chimney Termination

A masonry chimney used as a vent for gas fired equipment must extend at least three feet above the highest point where it passes through the roof. It must extend at least two feet higher than any portion of a building within a horizontal distance of 10 feet. In addition, the chimney must terminate at least 3 feet above any forced air inlet located within 10 feet. The chimney must extend at least five feet above the highest connected equipment draft hood outlet or flue collar.

Electrical Connections

WARNING

HIGH VOLTAGE

To avoid personal injury or death due to electrical shock, disconnect electrical power before servicing or changing any electrical wiring.

CAUTION

Label all wires prior to disconnection when servicing controls. Wiring errors can cause improper and dangerous operation. Verify proper operation after servicing.

WARNING

HIGH VOLTAGE

To avoid the risk of injury, electrical shock or death, the furnace must be electrically polarized and grounded in accordance with local codes or in their absence, with the latest edition of the National Electric Code.

Wiring Harness

The wiring harness is an integral part of this furnace. Field alteration to comply with electrical codes should not be required. Wires are color coded for identification purposes. Refer to the wiring diagram for wire routings. If any of the original wire as supplied with the furnace must be replaced, it must be replaced with wiring material having a temperature rating of at least 105°C. Any replacement wiring must be a copper conductor.

120 Volt Line Connections

Before proceeding with electrical connections, ensure that the supply voltage, frequency, and phase correspond to that specified on the unit rating plate. Power supply to the furnace must be NEC Class 1, and must comply with all applicable codes. The furnace must be electrically grounded in accordance with local codes or, in their absence, with the latest edition of The National Electric Code, ANSI NFPA 70.

Use a separate fused branch electrical circuit containing properly sized wire, and fuse or circuit breaker. The fuse or circuit breaker must be sized in accordance with the maximum overcurrent protection specified on the unit rating plate. An electrical disconnect must be provided at the furnace location.

Line voltage wiring must enter into the junction box provided with the furnace. Connect hot, neutral, and ground wires as shown in the wiring diagram located on the unit's blower door. Metal conduit is not considered a substitute for an actual ground wire to the unit.

Line polarity must be observed when making field connections. Line voltage connections can be made through either the right or left side panel. To relocate the junction box, follow the steps shown in the Junction Box Relocation section.

Junction Box Relocation

WARNING

Edges of sheet metal holes may be sharp. Use gloves as a precaution when removing hole plugs.

Line voltage connections can be made through either the right or left side panel. The furnace is shipped configured for a right side electrical connection. To make electrical connections through the opposite side of the furnace, the junction box must be relocated to the left side prior to making electrical connections. To relocate the junction box, perform the following steps.

WARNING

To prevent personal injury or death due to electric shock, disconnect electrical power, before installing or servicing this unit.

1. Remove both doors from the furnace.
2. Remove and save the screws holding the junction box to the right side of the furnace.
3. Models that have the junction box located in the burner compartment will need to move the junction box directly over.
4. Attach the junction box to the left side of the furnace, using the screws removed in step 2.
5. Check the location of the wiring. Confirm that it will not be damaged by heat from the burners or by the rotation of the fan. Also confirm that wiring location will not interfere with filter removal or other maintenance.

After the junction box is in the desired location, use washers to connect field-supplied conduit to the junction box in accordance with NEC and local codes. Connect hot, neutral, and ground wires as shown in the furnace wiring diagram. The wires and ground screw are located in the furnace junction box.

WARNING

HIGH VOLTAGE

To avoid personal injury, electrical shock or death, the furnace must be electrically grounded in accordance with local codes or in their absence, with the latest edition of the National Electrical Code.

To ensure proper unit grounding, the ground wire should run from the furnace ground screw located inside the furnace junction box all the way back to the electrical panel. **NOTE:** Do not use gas piping as an electrical ground. To confirm proper unit grounding, turn off the electrical power and perform the following check.

1. Measure resistance between the neutral (white) connection and the unpainted surface on the furnace.
2. Resistance should measure 10 ohms or less.

This furnace is equipped with a blower door interlock switch which interrupts unit voltage when the blower door is opened for servicing. Do not defeat this switch.

Gas Supply and Piping

The furnace rating plate includes the approved furnace gas input rating and gas types. The furnace must be equipped to operate on the type of gas applied.

CAUTION

To prevent unreliable operation or equipment damage, the inlet gas supply pressure must as specified on the unit rating plate with all other household gas fired appliances operating.

Inlet gas supply pressures must be maintained within the ranges specified in the following table. The supply pressure must be constant and available with all other household gas fired appliances operating. The minimum gas supply pressure must be maintained to prevent unreliable ignition. The maximum must not be exceeded to prevent unit overfiring and damage to gas valve.

NOTE: Do not remove the gas valve inlet plug before the gas line is installed. Replace if water or debris has been introduced.

INLET GAS SUPPLY PRESSURE		
Natural Gas	Minimum: 4.5" w.c.	Maximum: 10.0" w.c.

Table 4

High Altitude Derate

IMPORTANT NOTE: The furnace, as shipped, requires no change to run between 0-4500 feet. Manifold pressure adjustments and combustion analysis are required for all installations above 4500 ft. Refer to “Gas Supply Pressure Measurement” section for instruction on how to properly measure and adjust manifold “outlet” pressure. The furnace should operate for a minimum of 15 minutes before taking a combustion sample. Combustion samples should be taken from beyond the furnace exhaust and must be within provided CO2% range. See table 6 for recommended manifold pressure adjustments and proper CO2% range. Gas heating values can vary; further pressure adjustment may be necessary to ensure furnace operates within acceptable CO2 range. At all altitudes the air temperature rise must be within the range listed on the furnace rating plate.

Altitude	Gas	Kit	Manifold Pressure	Pressure Sensor
0 - 4500	Natural	None	3.0" w.c.	None

Table 5

80% Model	Manifold Pressure at 5000 ft	Manifold Pressure at 7500 ft	CO2% Natural Gas
DR80SC0604BU	2.5" w.c.	2.4" w.c.	5.7 - 7.2
DR80SC0805CU	2.5" w.c.	2.4" w.c.	6.0 - 7.5

Table 6

Gas Piping Connections

WARNING

To avoid possible unsatisfactory operation of equipment damage due to underfiring or equipment, use the proper size of natural/propane gas piping needed when running pipe from the meter/tank to the furnace.

When sizing gas lines, be sure to include all appliances on the same gas supply line and which will operate simultaneously.

The gas piping supplying the furnace must be properly sized based on the gas flow required, specific gravity of the gas, and length of the run. The gas line installation must comply with local codes, or in their absence, with the latest edition of the National Fuel Gas Code, NFPA 54/ANSI Z223.1.

Natural Gas Capacity of Pipe
In Cubic Feet of Gas Per Hour (CFH)

Length of Pipe in Feet	Nominal Black Pipe Size				
	1/2"	3/4"	1"	1 1/4"	1 1/2"
10	132	278	520	1050	1600
20	92	190	350	730	1100
30	73	152	285	590	980
40	63	130	245	500	760
50	56	115	215	440	670
60	50	105	195	400	610
70	46	96	180	370	560
80	43	90	170	350	530
90	40	84	160	320	490
100	38	79	150	305	460

(Pressure 0.5 psig or less and pressure drop of 0.3" W.C.; Based on 0.60 Specific Gravity Gas)

$$CFH = \frac{\text{BTUH Furnace Input}}{\text{Heating Value of Gas (BTU/Cubic Foot)}}$$

Table 7

To connect the furnace to the building's gas piping, the installer must supply a ground joint union, drip leg, manual shutoff valve, and line and fittings to connect to gas valve. In some cases, the installer may also need to supply a transition piece from 1/2" pipe to a larger pipe size.

The following stipulations apply when connecting gas piping.

- Gas piping must be supported external to the furnace cabinet so that the weight of the gas line does not distort the burner rack, manifold or gas valve.
- Use black iron or steel pipe and fittings for the building piping. Where possible, use new pipe that is properly chamfered, reamed, and free of burrs and chips. If old pipe is used, be sure it is clean and free of rust, scale, burrs, chips, and old pipe joint compound.
- Use pipe joint compound on male threads ONLY. Always use pipe joint compound (pipe dope) that is APPROVED FOR ALL GASSES. DO NOT apply compound to the first two threads.
- Use ground joint unions.
- Install a drip leg to trap dirt and moisture before it can enter the gas valve. The drip leg must be a minimum of three inches long.
- Install a 1/8" NPT pipe plug fitting, accessible for test gage connection, immediately upstream of the gas supply connection to the furnace.
- Always use a back-up wrench when making the connection to the gas valve to keep it from turning. The orientation of the gas valve connection is 374 in-lbs; excessive over-tightening may damage the gas valve and/or gas manifold assembly.
- Install a manual shutoff valve between the gas meter and unit within six feet of the unit. If a union is installed, the union must be downstream of the manual shutoff valve, between the shutoff valve and the furnace.
- Tighten all joints securely.
- Protect connectors and semi-rigid tubing against physical and thermal damage when installed. Ensure aluminum-alloy tubing and connectors are coated to protect against external corrosion when in contact with masonry, plaster, or insulation, or subjected to repeated wetting by liquids such as water (except rain water), detergents, or sewage. The gas piping may enter the left or right side of the furnace cabinet. The installer must supply rigid pipe long enough to reach the outside of the cabinet to seal the grommet cabinet penetration. A semi-rigid connector to the gas piping can be used outside the cabinet per local codes. 1/2" NPT pipe and fittings are required. Model requires one 90 deg elbow, one 2" nipple and additional nipple to reach outside the cabinet. A semi-rigid connector to the gas piping can be used outside the cabinet per local codes. From the elbow, the length of pipe and the fittings required will vary by the side chosen, location of union and cabinet width. The union may be placed inside or outside of the cabinet.

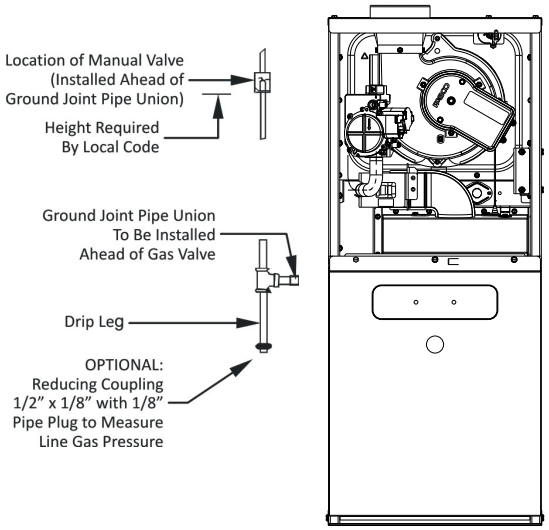

General Furnace Layout
Figure 11

Upflow Installations

A ground joint union, drip leg, and manual shutoff valve must also be supplied by the installer. In some cases, the installer may also need to supply a transition piece from 1/2" to another pipe size.

When the gas piping enters through the side of the furnace, the installer must supply the following fittings (starting from the gas valve nipple elbow):

- Straight pipe to reach the exterior of the furnace.
- A ground joint union, drip leg, and manual shutoff valve must also be supplied by the installer.

Gas Piping Checks

Before placing unit in operation, leak test the unit and gas connections.

WARNING

To avoid the possibility or explosion or fire, never use a match or open flame to test for leaks.

Check for leaks using an approved chloride-free soap and water solution, an electronic combustible gas detector, or other approved testing methods.

CAUTION

To prevent property damage or personal injury due to fire, the following instructions must be performed regarding gas connections, pressure testing, location of shutoff valve and installation of gas piping.

NOTE: Never exceed specified pressures for testing. Higher pressure may damage the gas valve and cause subsequent overfiring, resulting in heat exchanger failure.

Disconnect this unit and shutoff valve from the gas supply piping system before pressure testing the supply piping system with pressures in excess of 1/2 psig (3.48 kPa).

This unit must be isolated from the gas supply system by closing its manual shutoff valve before pressure testing of gas supply piping system with test pressures equal to or less than 1/2 psig (3.48 kPa).

WARNING

If the gas furnace is installed in a basement, an excavated area or confined space, it is strongly recommended to contact a propane supplier to install a gas detecting warning device in case of a gas leak.

Ductwork

WARNING

Never allow the products of combustion, including carbon monoxide, to enter the return duct or circulation air supply.

Duct systems and register sizes must be properly designed for the CFM and external static pressure rating of the furnace. Ductwork should be designed in accordance with the recommended methods of "Air Conditioning Contractors of America" Manual D.

A duct system must be installed in accordance with Standards of the National Board of Fire Underwriters for the Installation of Air Conditioning, Warm Air Heating and Ventilating Systems. Pamphlets No. 90A and 90B.

A closed return duct system must be used, with the return duct connected to the furnace. **NOTE: Ductwork must never be attached to the back of the furnace. For installations requiring more than 1800 CFM, use a bottom return or two sided return.** Supply and return connections to the furnace may be made with flexible joints to reduce noise transmission. To prevent the blower from interfering with combustion air or draft when a central return is used, a connecting duct must be installed between the unit and the utility room wall. Furnace is shipped with the top flanges in the flat position. Before installing a coil or ducts, the flanges must be bent 90°. A room, closet, or alcove must not be used as a return air chamber.

When the furnace is used in connection with a cooling unit, the furnace should be installed in parallel with or on the upstream side of the cooling unit to avoid condensation in the heating element. With a parallel flow arrangement, the dampers or other means used to control the flow of air must be adequate to prevent chilled air from entering the furnace and, if manually operated, must be equipped with means to prevent operation of either unit unless the damper is in the full heat or cool position.

Damper must be in open position when appliance main burner is operating.

When the furnace is installed without a cooling coil, it is recommended that a removable access panel be provided in the outlet air duct. This opening shall be accessible when the furnace is installed and shall be of such a size that the heat exchanger can be viewed for visual light inspection or such that a sampling probe can be inserted into the airstream. The access panel must be made to prevent air leaks when the furnace is in operation.

NOTE: In a horizontal installation the air conditioning coil must be adequately supported by proper brackets and supports. Inadequate coil support can result in furnace cabinet distortion and air leakage.

When the furnace is heating, the temperature of the return air entering the furnace must be between 55°F and 100°F.

When a furnace is installed so that supply ducts carry air circulated by the furnace to areas outside the space containing the furnace, the return air shall also be handled by a duct sealed to the furnace casing and terminating outside the space containing the furnace.

WARNING

EDGES OF SHEET METAL HOLES MAY BE SHARP. USE GLOVES AS A PRECAUTION WHEN REMOVING SHEET METAL FROM RETURN AIR OPENINGS.

FILTERS-READ THIS SECTION BEFORE INSTALLING THE RETURN AIR DUCTWORK

Filters must be used with this furnace. Discuss filter maintenance with the building owner. Filters do not ship with this furnace, but must be provided by the installer. Filters must comply with UL900 or CAN/ULCS111 standards. Damage or repairs due to failure to install filters in the furnace are not covered under the warranty.

NOTE: An undersized opening will cause reduced airflow. Refer to the Filter Sizing Chart to determine filter area requirements.

UPRIGHT INSTALLATIONS

Depending on the installation and/or customer preference, differing filter arrangements can be applied. Filters can be installed in the central return register or a side panel external filter rack kit (upflows). As an alternative, a media air filter or electronic air cleaner may be used. The following figure shows possible filter locations.

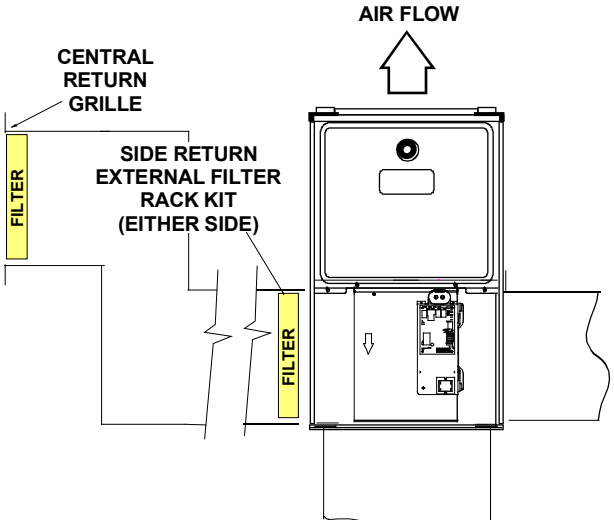

Upright Upflow

Figure 12

One of the most common causes of a problem in a forced air heating system is a blocked or dirty filter. Circulating air filters must be inspected monthly for dirt accumulation and replaced if necessary. Failure to maintain clean filters can cause premature heat exchanger failure.

A new home may require more frequent replacement until all construction dust and dirt is removed. Circulating air filters are to be installed in the return air duct external to the furnace cabinet.

MODEL	Minimum Recommended Filter Size^
DR80SC0604BU	1 - 16 X 25 Side or 1 - 14 X 24 Bottom Return
DR80SC0805CU	2 - 16 X 25 Side Return, 1 - 20 X 25 Bottom Return

^ Larger filters may be used, filters may also be centrally located.

Table 8

COOL CLOUD HVAC PHONE APPLICATION

Actual screens may look different based on the mobile device being used.

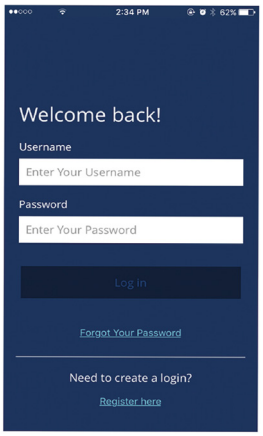

Figure 16

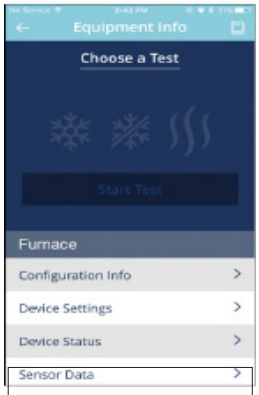

Figure 17

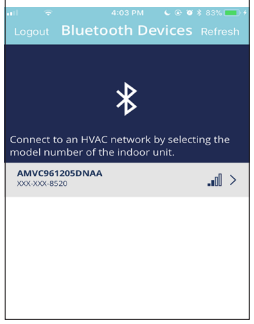

Figure 18

This furnace is Bluetooth ready and functions with the Cool

Cloud HVAC phone application designed to improve the contractor's setup / diagnostic experience. Users can see specific model information, review active diagnostic error codes, observe system status during operation, make system menu adjustments, add site visit notes and run system testing of all operational modes (heat / cool / fan) directly from the phone. The phone application is also capable of directly updating the furnace software anytime updates are available. The application will automatically notify the user if updates are available.

NOTE: The software update may take up to 20 minutes to complete.

Quick Start Guide For Communicating Outdoor Units

EXTREMELY IMPORTANT: For all cooling calls the system only requires a single Y input from the thermostat. For all heating calls (including dual fuel applications) the system only requires a single W input from the thermostat. Internal algorithms will control all available cooling and heating stages including dual fuel operation based on these inputs. Any single-stage 24VAC thermostat can be used. For proper operation the thermostat must be setup to control a single-stage AC outdoor unit and to control a single stage gas furnace. The control board does not accommodate an O wire thermostat input (reversing valve signal). If a heat pump is installed, the thermostat should be setup as stated above. Setting the thermostat for the heat pump control or multi stage control may result in incorrect performance.

1) Connect all necessary thermostat wires to the thermostat connector on the furnace control as instructed by the applicable wiring diagrams shown in this section.
2) Connect the 1 & 2 wires between the indoor and outdoor unit for communicating operation.
   Note: verify two stage outdoor units include a 24 VAC transformer (for outdoor control board power) Two stage outdoor units may not behave properly without this 24 VAC transformer.

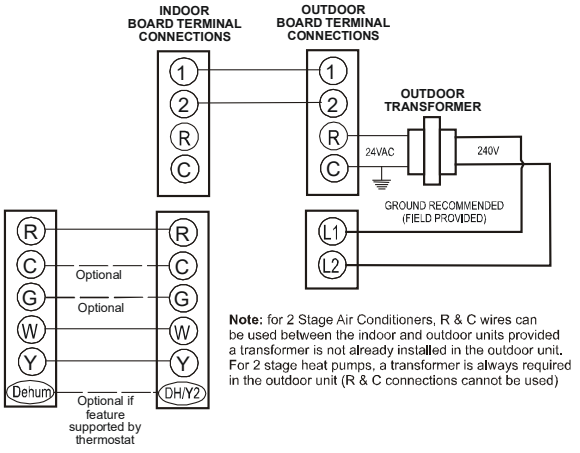

Communicating Two Stage Air Conditioner or Heat Pump
Figure 19

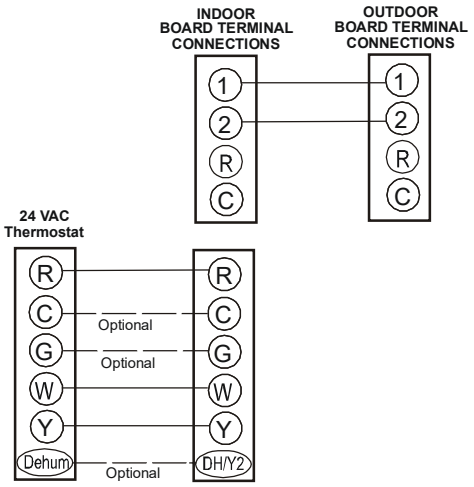

Communicating Inverter Air Conditioner or Heat Pump
Figure 20

3) Download the Cool Cloud HVAC phone application for charging and to configure/test system operations.

NOTE: When new versions of Bluetooth Communication Software and Furnace Control Software are available, the phone application notifies the user. Software updates are classified as either optional or mandatory and installed by using the phone application. Ensure all mandatory software updates have been installed. Review notes for optional software updates and install if necessary.

NOTE: If an E11 code exists for the inverter system immediately after line voltage is applied (code shown in the Cool Cloud HVAC phone application or displayed on the inverter control), the System Verification Test needs to be completed before any other operation. See the following procedure.

1) Allow the system to remain Idle for 5 minutes.
2) Turn the system verification test on either by using the phone application, or by entering the SUt menu through the furnace push buttons.
3) Wait for the test to complete.

Charging

1) Inverter units using the Cool Cloud HVAC phone application or control board push button:
   a. Inverter units are charged by setting the Cr9 menu (Charge Mode) to ON through the furnace control board push buttons or through the Cool Cloud HVAC phone application.
   b. The System will remain in charge mode (high speed) for 60 minutes before timing out.
   c. The installer must manually shut off charge mode once complete.
2) Two-stage outdoor units using the Cool Cloud HVAC application:

a. Charge the outdoor unit as required using the charging information provided with the outdoor equipment.

4) Confirm thermostat heating and cooling calls function properly with equipment.

Quick Start Guide For Non-Communicating Outdoor Units

When setting up a ComfortBridge™ furnace for use with a Non-Communicating outdoor unit you must set airflow in the “ton” menu on the PCB or in the CoolCloud HVAC APP. Failure to do so will result in the furnace PCB displaying “IdL” and the
blower will not operate with a call for cooling. The Board does not need to be replaced, you MUST set the airflow first.

EXTREMELY IMPORTANT: For two-stage gas heating, the system only needs a single W input. Internal algorithms will control staging of the gas furnace automatically based on the single W input. For non-communicating outdoor unit wiring see instructions below.

1) Use the wiring diagrams below to connect low voltage thermostat wires.

NOTE: When installing the furnace with a non communicating heat pump wire directly from the “O” terminal on the thermostat to the reversing valve “O” terminal on the non communicating heat pump. See Figure 23 for single stage and Figure 24 for the two stage diagrams.

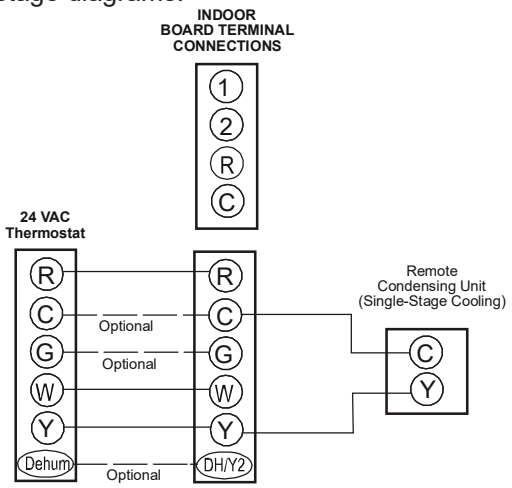

Non-Communicating Single Stage A/C
Figure 21

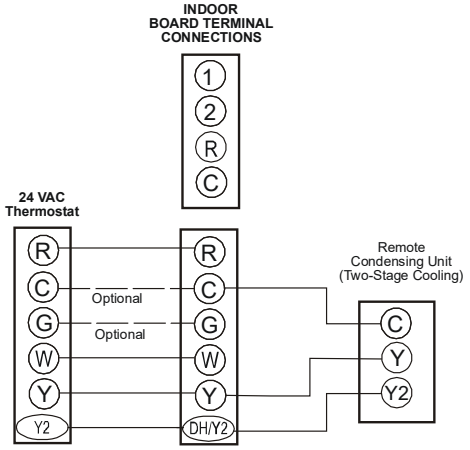

Non Communicating Two Stage A/C
Figure 22

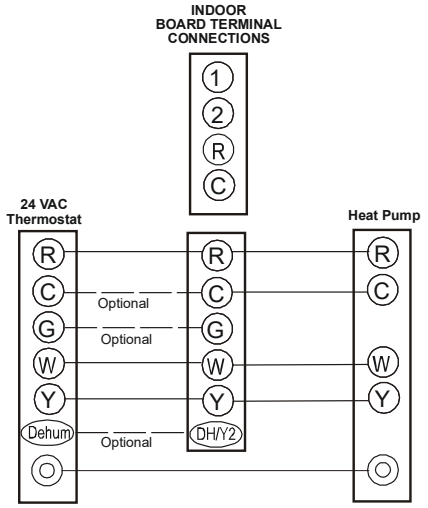

Non-Communicating Single Stage Heat Pump
Figure 23

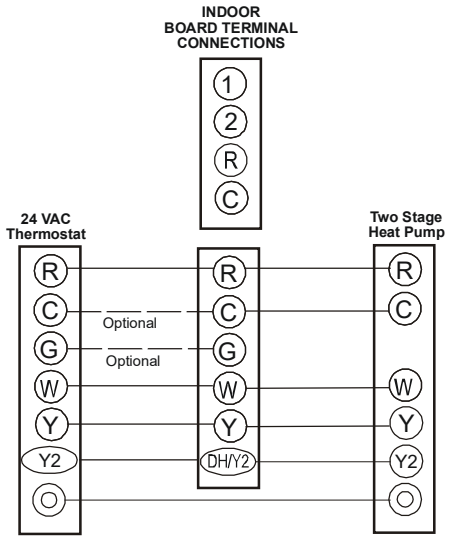

Non-Communicating Two Stage Heat Pump
Figure 24

2) Download the Cool Cloud HVAC phone application.

NOTE: When new versions of Bluetooth Communication Software and Furnace Control Software are available, the phone application notifies the user. Software updates are classified as either optional or mandatory and installed by using the phone application. Ensure all mandatory software updates have been installed. Review notes for optional software updates and install if necessary.

3) Select the Non-Comm Outdoor Setting menu (0d5) using the on board push buttons or the Cool Cloud HVAC phone application. Select 1 AC for single stage Air Conditioners, 1HP for single stage heat pumps, 2 AC for two stage air conditioners and 2 HP for two stage Heat Pumps.
4) Go to the tonnage units menu (ton) and select the tonnage value that corresponds to the desired airflow for the outdoor unit. See the following table.

NOTE: For two stage non-communicating outdoor units, system will stage airflow automatically for low stage operation.

Tonnage Selection	Airflow	Tonnage Selection	Airflow	Tonnage Selection	Airflow	Tonnage Selection	Airflow
1	400	2.3	920	3.6	1440	4.9	1960
1.1	440	2.4	960	3.7	1480	5	2000
1.2	480	2.5	1000	3.8	1520	5.1	2040
1.3	520	2.6	1040	3.9	1560	5.2	2080
1.4	560	2.7	1080	4	1600	5.3	2120
1.5	600	2.8	1120	4.1	1640	5.4	2160
1.6	640	2.9	1160	4.2	1680	5.5	2200
1.7	680	3	1200	4.3	1720	5.6	2240
1.8	720	3.1	1240	4.4	1760	5.7	2280
1.9	760	3.2	1280	4.5	1800	5.8	2320
2	800	3.3	1320	4.6	1840	5.9	2360
2.1	840	3.4	1360	4.7	1880	6	2400
2.2	880	3.5	1400	4.8	1920		

NOTE: the system will not provide airflows above the Max Airflow Value.

- 3 Ton Models = 1,400 CFM
- 4 Ton Models = 1,760 CFM
- 5 Ton Models = 2,200 CFM

5) Use the Cool Cloud HVAC phone application to configure/test furnace operations.

NOTE: The phone application cannot test a non-communicating outdoor unit.The thermostat will be required for outdoor unit testing.

6) Confirm thermostat heating and cooling calls function properly with equipment.

Quick Start Guide for Gas Heat Only Setup (No Outdoor Unit)

EXTREMELY IMPORTANT: The furnace only requires a single W input for 2 stage gas heat control. Internal algorithms will control staging of the gas furnace automatically

1) Connect all necessary thermostat wires to the thermostat connector on the furnace control as shown in the following diagram.

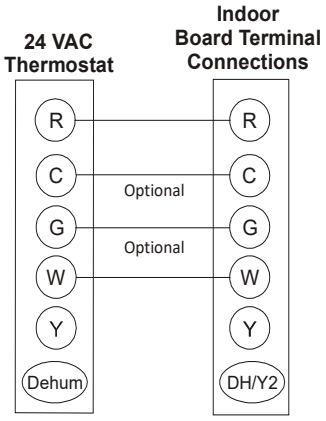

Gas Heat Only
Figure 25

2) Download the Cool Cloud HVAC phone application and use it to configure/test furnace operations.

NOTE: When new versions of Bluetooth Communication Software and Furnace Control Software are available, the phone application notifies the user. Software updates are classified as either optional or mandatory and installed by using the phone application. Ensure all mandatory software updates have been installed. Review notes for optional software updates and install if necessary.

3) Confirm thermostat heating call functions properly with equipment

Dehumidification

Dehumidification allows the furnace's circulator blower to operate at a reduced speed during a combined thermostat call for cooling demand with a parallel humidistat. This lower blower speed increases dehumidification of the conditioned air as it passes through the indoor coil. The control board is equipped with a 24 volt dehumidification input (DH) located on the thermostat wiring connector. The terminal can be configured to enable dehumidification when the input is energized or de-energized. When using an external dehumidistat, connect it between the R and DH terminals. If the humidistat closes on humidity rise or the thermostat energizes this terminal when dehumidification is required, set the control board "dHL" (Dehum Logic) menu setting to "Hi " using the push buttons or Cool Cloud HVAC phone application. If the humidistat opens on humidity rise or the thermostat de-energizes this terminal when dehumidification is required, set the "dHL" (Dehum Logic) menu to "Lo" using the push buttons or Cool Cloud HVAC phone application.

Auxiliary Alarm Switch

The control is equipped with a 24VAC Aux Alarm to be used for a condensate switch install (designated by CONDENSATE IN/OUT on the control). By default, the connected AUX switch is normally closed and opens when the water level in the evaporator coil base pan reaches an undesirable level. The control responds by displaying an EEd error code and turning off the outdoor condensing unit. If the AUX switch is detected to be in the closed position for 30 seconds, normal operation resumes and the error message is no longer displayed.

Push Button Menu

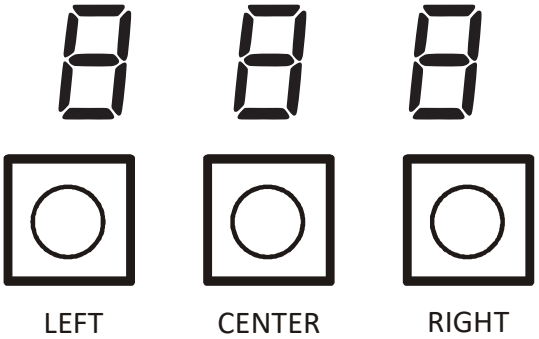

Figure 26

The furnace includes three on-board push buttons allowing users to navigate indoor and outdoor system menus. The Right and Left buttons allow the user to scroll through the main menus and to then scroll through available options within specific menus. The Center button is used to enter into a main menu and to then permanently select options within those menus.

NOTE: After scrolling to the desired option within a menu, that option may be flashing on the 7-segment displays. This indicates the option has not been officially selected. Pressing the Center button two times will select that option. The first press will stop the flashing. The second will make the selection official and return you to the main menu.

Accessories

Accessory Control (Humidifiers, Dehumidifiers, Ventilators)

If an external humidifier, dehumidifier or ventilator is installed, it may require airflow from the HVAC system to function properly.

1) Make sure the installed 24VAC thermostat is capable of controlling the accessory or accessories.
2) Connect the appropriate accessory control wires to the accessory devices from the thermostat (see thermostat manual for connection and setup instructions).
3) If the thermostat is capable of providing a continuous fan call (G signal) during accessory operation:
   Make sure to connect the thermostat G terminal to the G terminal on the indoor unit. Setup thermostat to ensure G signal is energized during accessory operation.

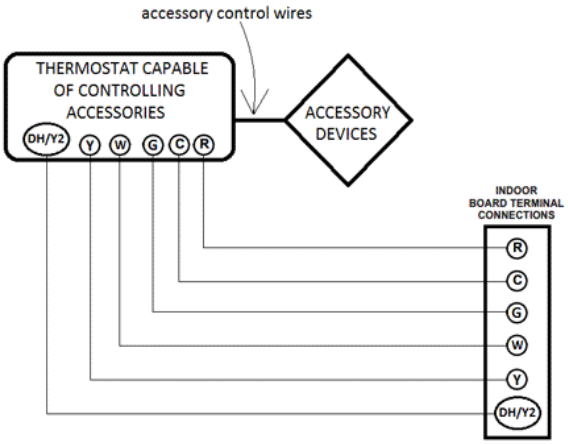

Figure 27

4) Select the appropriate fan only airflow for the accessory using the indoor unit push button menus or the Cool Cloud HVAC phone application.
5) Using the thermostat, independently test each accessory in addition to independently testing continuous fan mode.

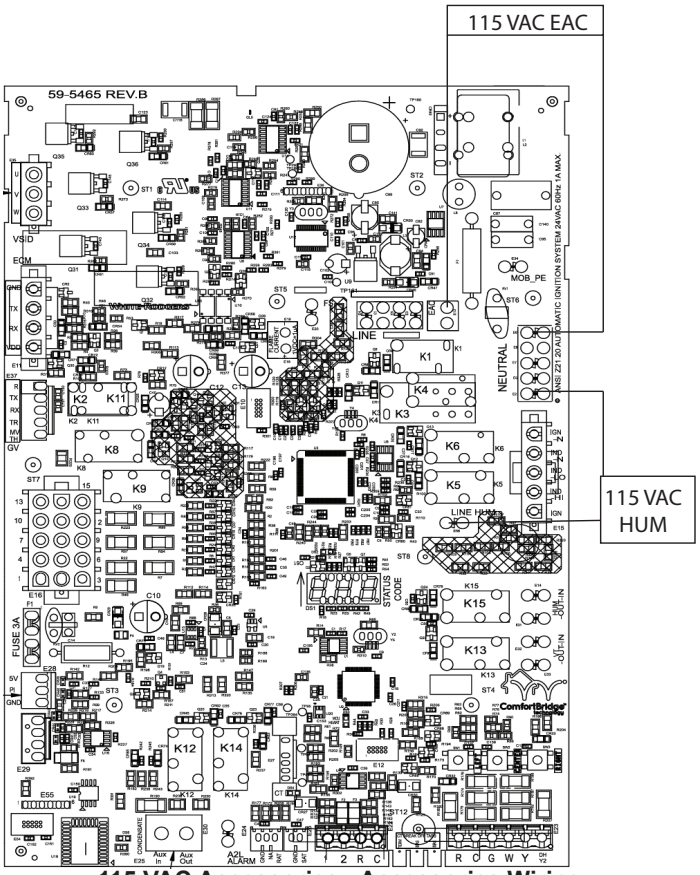

115 VAC Accessories - Accessories Wiring

Figure 28

Low Voltage Ventilation

The Ventilation connections provide dry contact for field ventilator wiring connections. These connections are normally open and energize during the R-32 fault/alarm condition. A VT IN and a VT OUT connectors are provided and are shown in the image below.

Low Voltage A2L Alarm

The A2L alarm connection provides 24VAC for field alarm wiring connections. These connections are normally open and energize during the R-32 fault/alarm condition. An A2L Alarm connector is provided and is shown in the image below.

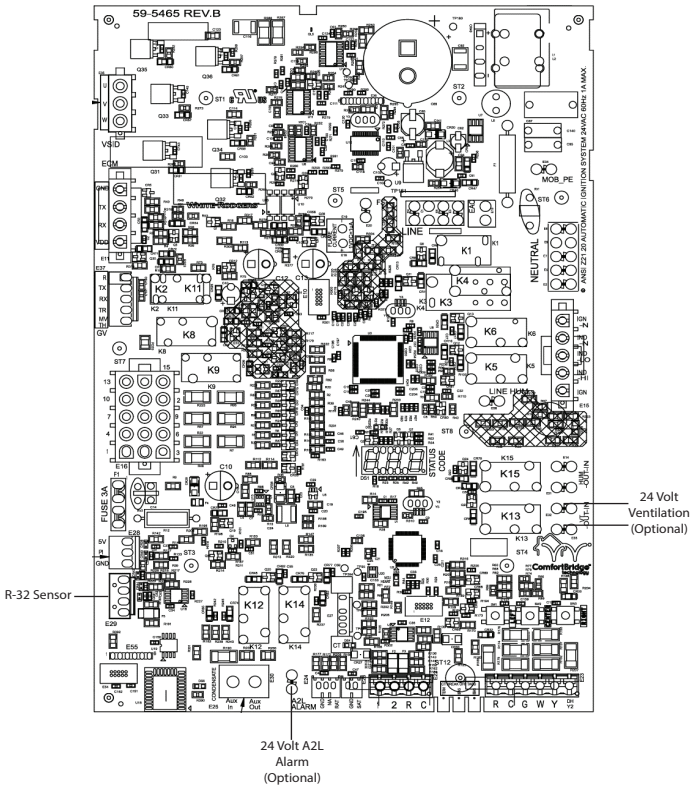

24 VAC Accessories - Accessories Wiring

Figure 29

Ramping Profiles

The variable-speed circulator offers four different ramping profiles. These profiles may be used to enhance cooling performance and increase comfort level. Select ramping profiles on the user menu.

Profile A (1) provides only an OFF delay of one (1) minute at 100% of the cooling demand airflow.

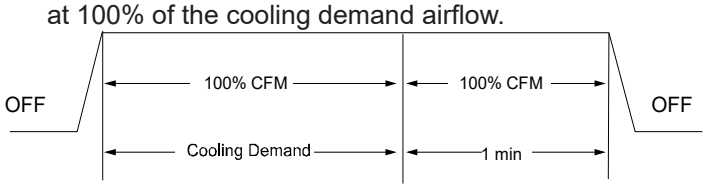

Figure 30

- Profile B (2) ramps up to full cooling demand airflow by first stepping up to 50% of the full demand for 30 seconds. The motor then ramps to 100% of the required airflow. A one (1) minute OFF delay at 100% of the cooling airflow is provided.

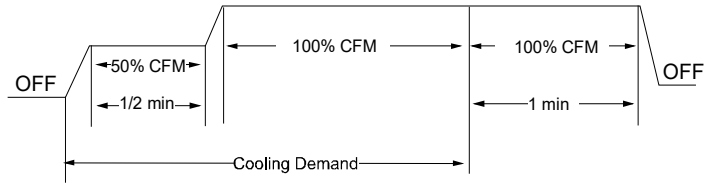

Figure 31

- Profile C (3) ramps up to 85% of the full cooling demand airflow and operates there for approximately 7 1/2 minutes. The motor then steps up to the full demand airflow. Profile C also has a one (1) minute 100% OFF delay.

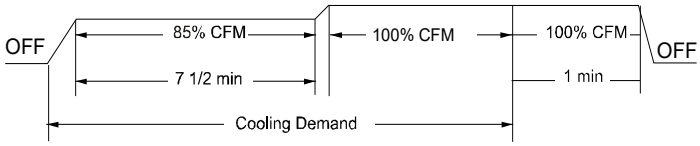

Figure 32

- Profile D (4) ramps up to 50% of the demand for 1/2 minute, then ramps to 85% of the full cooling demand airflow and operates there for approximately 7 1/2 minutes. The motor then steps up to the full demand airflow. Profile D has a 1/2 minute at 50% airflow OFF delay.

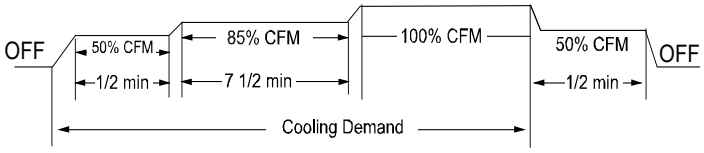

Figure 33

115 Volt Line Connection or Electronic Air Cleaner

WARNING

HIGH VOLTAGE

To avoid personal injury or death due to electrical shock, disconnect electrical power before servicing or changing any electrical wiring.

The accessory load specifications are as follows:

EAC	1.0 AMP maximum at 120 VAC

The furnace integrated control module is equipped with a line voltage accessory terminal for controlling power to an optional field supplied electronic air cleaner or any device required to operate inparallel with a circulating fan demand.

To connect an electronic air cleaner using the line voltage EAC terminal:

- Turn OFF power to the furnace before installing any accessories.
- Follow the air cleaner manufacturers' instructions for locating, mounting, grounding, and controlling accessories. Utilize 1/4" quick connect terminals to make accessory wiring connections to the furnace integrated control module.
- Connect the hot terminal utilized for accessory operation to the EAC terminal and the neutral side of power to NEUTRAL bus on the integrated furnace control or the neutral connection in the furnace junction box.
- All field wiring must conform to applicable codes.

- If it is necessary for the installer to supply additional line voltage wiring to the inside of the furnace, the wiring must conform to all local codes, and have a minimum temperature rating of 105°C.
- All line voltage wire splices must be made inside the furnace junction box.

Startup Procedure & Adjustment

NOTE: This furnace is equipped with a control board that is capable of monitoring for R-32 refrigerant leaks in the indoor refrigeration unit. Please verify that the R-32 sensor wire is plugged in to the furnace control board before startup, if applicable. If furnace is not paired with an R-32 Refrigeration system, the default settings in the furnace control board will need to be changed. Please see the R-32 section for additional information.

Furnace must have a 115 VAC power supply properly connected and grounded. Proper polarity must be maintained for correct operation. In addition to the following start-up and adjustment items, refer to further information in Operational Checks section.

Furnace Operation

Purge gas lines of air prior to startup. Be sure not purge lines into an enclosed burner compartment. Follow NFPA 54, National Fuel Gas Code for proper purging methods. In Canada, follow approved purging methods in CAN/CSA B149.1-15.

Check for leaks using an approved chloride-free soap and water solution, an electronic combustible gas detector, or other approved method. Verify that all required kits (high altitude, etc.) have been appropriately installed.

R-32 Function

This furnace is equipped with a control board that is capable of shutting off the gas heat and turning on the blower fan in case of an R-32 refrigerant leak in the indoor cooling unit. If the cooling unit that is paired with this furnace does not utilize R-32 as the refrigerant, the R-32 functionalities in the furnace control board will need to be turned off for the furnace to run properly.

R-32 function on the control board is ON by default. The R-32 function can be disabled through the furnace control by entering the A2L Function Enabled menu and selecting “no”. If A2L function is disabled, the furnace control will ignore all A2L functions. If A2L function is enabled, the control will monitor the R-32 sensor information.

R-32 Sensor Wire Routing

Important Note: Wiring routing must not interfere with circulator blower operation, filter removal or routine maintenance. Wire should not be routed near hot surfaces and should be protected from sharp edges.

The R-32 Sensor wire coming from the indoor refrigeration unit will need to be routed into the furnace and connected to the connection point on the furnace control board. This wire should be routed alongside the thermostat wires through the low voltage openings in the left or right side of the furnace blower compartment. Please see the electrical section for the location of the R-32 Sensor connection on the control board.

Furnace Startup

During furnace start up, the furnace control will identify the connected R-32 sensor and will start monitoring the sensor communication. A green LED located next to the sensor connection will indicate if there is communication between the furnace control and the R-32 sensor. The LED will be ON during the duration of the startup and then will either start blinking or turn OFF. The blinking LED signifies that communication with the R-32 sensor is present. The LED OFF signifies that there is no signal with the sensor.

If there are no alarms or faults, the furnace will go into regular run mode after a warm up period. The furnace control monitors the R-32 sensor once per second.

R-32 Refrigerant Leak

If the R-32 sensor on the indoor cooling unit detects a specified concentration of R-32 refrigerant, the furnace will enter Mitigation Mode to dilute the refrigerant concentrations in case of a leak. In Mitigation Mode, the furnace will do the following:

1. Display the A2L Refrigerant Leakage error code (EAL)
2. Shut down the gas operation
3. Energize the optional ventilation and alarm outputs.
4. Run the fan at max CFM airflow

Once the R-32 sensor stops detecting a leak, the fan will continue to run for 5 minutes. After the 5 minutes, if there are no other alarms or faults, the control will de-energize the optional ventilation and alarm outputs and then go back to the original operating mode per the thermostat.

A2L Verification

The A2L Function Verification menu allows the installer to verify if the R-32 function operates properly. This menu simulates the refrigerant leak process and is only able to be used when there are no active alarms or faults. To verify the R-32 functions, enter the A2L Function Verification menu and select “YES”. Once “YES” is selected, the furnace will do the following:

1. Display the A2L Refrigerant Leakage code (EAL)
2. Shut down the gas operation
3. Energize the optional ventilation and alarm outputs.
4. Run the fan at max CFM airflow

The control will exit the verification function if:

1. The 5 minute timeout expires or
2. An alarm or fault is detected or
3. The user turns OFF the A2L Function Verification.

Furnace Startup

1. Close the manual gas shutoff valve external to the furnace.
2. Turn off the electrical power to the furnace.
3. Set the room thermostat to the lowest possible setting.
4. Remove the burner compartment door.

NOTE: This furnace is equipped with an ignition device which automatically lights the burner. Do not try to light the burner by hand.

5. Move the furnace gas valve manual control to the OFF position.
6. Wait five minutes then smell for gas. Be sure check near the floor as some types of gas are heavier than air.
7. If you smell gas after five minutes, immediately follow the safety instructions in the Safety Considerations on page 3 of this manual. If you do not smell gas after five minutes, move the furnace gas valve manual control to the ON position.
8. Replace the burner compartment door.
9. Open the manual gas shutoff valve external to the furnace.
10. Turn on the electrical power to the furnace.
11. Adjust the thermostat to a setting above room temperature.
12. After the burners are lit, set the thermostat to desired temperature.

Furnace Shutdown

1. Set the thermostat to the lowest setting.
   The integrated control will close the gas valve and extinguish flame. Following a 15 second delay, the induced draft blower will be de-energized. After the blower off delay time expires, the blower de-energizes.
2. Remove the burner compartment door and move the furnace gas valve manual control to the OFF position.
3. Close the manual gas shutoff valve external to the furnace.
4. Replace the burner compartment door.

Diagnostic Chart

WARNING

HIGH VOLTAGE

To avoid personal injury or death due to electrical shock, disconnect electrical power before performing any service or maintenance.

Refer to the Troubleshooting Chart in the back of this manual for assistance in determining the source of unit operational problems. The 7-segment LED displays will display an error code that may contain a letter and number. The error code may be used to assist in troubleshooting the unit.

Resetting From Lockout

Furnace lockout results when a furnace is unable to achieve ignition after three attempts during a single call for heat. It is characterized by a non-functioning furnace and an EE0 code displayed on the 7-segment display. If the furnace is in “lockout”, it will (or can be) reset in any of the following ways.

1. Automatic reset. The integrated control module will automatically reset itself and attempt to resume normal operations following a one hour lockout period.
2. Manual power interruption. Interrupt 115 volt power to the furnace.
3. Manual thermostat cycle. Lower the thermostat so that there is no longer a call for heat for 1 -20 seconds then reset to previous setting.

NOTE: If the condition which originally caused the lockout still exists, the control will return to lockout. Refer to the *Troubleshooting Chart* for aid in determining the cause.

Gas Supply Pressure Measurement

CAUTION

To prevent unreliable operation or equipment damage, the inlet gas supply pressure must be as specified on the unit rating plate with all other household gas fired appliance operating.

The line pressure supplied to the gas valve must be within the range specified on Table 9. The supply pressure can be measured at the gas valve inlet pressure tap or at a hose fitting installed in the gas piping drip leg. The supply pressure must be measured with the unit OFF. To measure inlet pressure, use the following procedure.

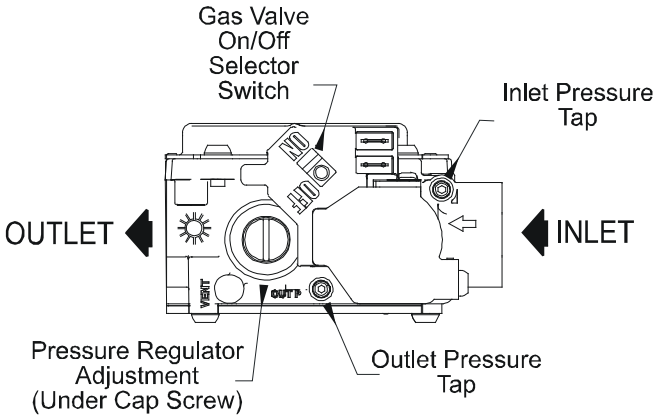

White-Rodgers Model 36J22Y

Figure 34

1. Turn OFF gas to furnace at the manual gas shutoff valve external to the furnace.
2. Turn OFF all electrical power to the system.
3. Inlet pressure tap connections:
   a. White-Rodgers valve:
      Back inlet pressure test screw (inlet pressure tap out one turn (counterclockwise, not more than one turn).
4. Connect calibrated manometer (or appropriate pressure gauge) at either the gas valve inlet pressure tap or the gas piping drip leg. See White-Rodgers 36J22Y gas valve Figure 13 for location of inlet pressure tap.
5. Turn ON the gas supply.
6. Turn On power and operate the furnace and all other gas consuming appliances on the same gas supply line.
7. Using a leak detection solution or soap suds, check for leaks at screw (White-Rodgers valve). Bubbles forming indicate a leak. SHUT OFF GAS AND REPAIR ALL LEAKS IMMEDIATELY!
8. Measure the gas supply pressure with burners firing. Adjust supply pressure using the *Inlet Gas Supply Pressure* table shown below. If supply pressure reading differs from the table, make necessary adjustments to pressure regulator, gas piping size, etc., and/or consult with local gas utility.

INLET GAS SUPPLY PRESSURE		
Natural Gas	Minimum: 4.5" w.c.	Maximum: 10.0" w.c.

Table 9

9. Turn OFF all electrical power and gas supply to the system.
10. Remove the manometer hose from the hose barb fitting or inlet pressure Tap.
11. Replace inlet pressure tap:
    a. White-Rodgers valve:
    Turn inlet pressure test screw in to seal pressure port (clockwise, 7 in-lb minimum).
12. Retest for leaks. If bubbles form, shut down gas and repair leaks immediately.
13. If there are no leaks, turn ON electrical power and gas supply to the system.
14. Turn valve switch ON.

NOTE: If measuring gas pressure at the drip leg, a field-supplied hose barb fitting must be installed prior to making the hose connection. If using the inlet pressure Tap on the White-Rodgers gas valve, then use the 36G/J Valve Pressure Check Kit, Goodman Part No. 0151K00000S.

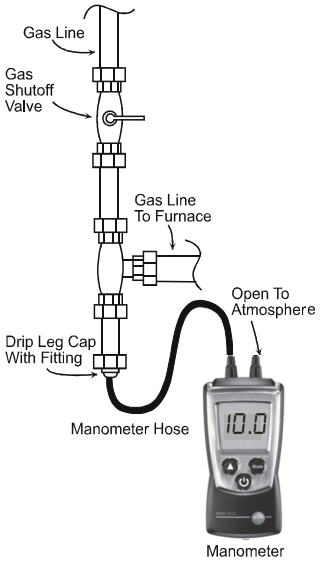

Measuring Inlet Gas Pressure (Alt. Method)

Figure 35

Gas Manifold Pressure Measurement and Adjustment

CAUTION

To prevent unreliable operation or equipment damage, the inlet gas supply pressure must be as specified on the unit rating plate with all other household gas fired appliance operating.

Only small variations in gas pressure should be made by adjusting the gas valve pressure regulator. The manifold pressure must be measured with the burners operating. To measure and adjust the manifold pressure, use the following procedure.

1. Turn OFF gas to furnace at the manual gas shutoff valve external to the furnace.
2. Turn OFF all electrical power to the system.
3. Outlet pressure tap connections:
    a. White-Rodgers valve:
    Back outlet pressure test screw (outlet pressure Tap) out one turn (counterclockwise, not more than one turn).
4. Connect calibrated manometer (or appropriate pressure gauge) at the gas valve outlet pressure tap. See White-Rodgers 36J22Y gas valve Figure 13 for location of outlet pressure tap.
5. Turn ON the gas supply.
6. Turn ON power and close thermostat “R” and “W” contacts to provide a call for heat.
7. Using a leak detection solution or soap suds, check for leaks at outlet pressure Tap screw (White-Rodgers valve). Bubbles forming indicate a leak. SHUT OFF GAS AND REPAIR ALL LEAKS IMMEDIATELY!
8. Measure the gas manifold pressure with burners firing. Adjust manifold pressure using the following *Manifold Gas Pressure* table.

Manifold Gas Pressure	
Natural Gas	2.8" - 3.2" w.c.

Table 10

9. Remove regulator cover screw from the outlet pressure regulator and turn screw clockwise to increase pressure or counterclockwise to decrease pressure. Replace regulator cover screw.
10. Turn OFF all electrical power and gas supply to the system.
11. Remove the manometer hose from the hose barb fitting or outlet pressure Tap.
12. Replace outlet pressure tap:
    a. White-Rodgers valve: Turn outlet pressure test screw in to seal pressure port (clockwise, 7 in-lb minimum).
13. Turn ON electrical power and gas supply to the system.
14. Close thermostat contacts to provide a call for heat.
15. Retest for leaks. If bubbles form, SHUT OFF GAS AND REPAIR ALL LEAKS IMMEDIATELY!

Gas Input Rate Measurement (Natural Gas Only)

The gas input rate to the furnace must never be greater than that specified on the unit rating plate. To measure natural gas input using the gas meter, use the following procedure.

1. Turn OFF the gas supply to all other gas-burning appliances except the furnace.
2. While the furnace is operating at high fire rate, time and record one complete revolution of the gas meter dial, measuring the smallest quantity, usually the dial that indicates 1/2 cu. ft. per revolution. You will use this number to calculate the quantity of gas in cubic ft. if the furnace would consume if it ran steadily for one hour (3600 seconds).

3. If the 1/2 cu. ft. dial was used, multiply your number X 2. EXAMPLE: If it took 23 seconds to complete one revolution of the 1/2 ft. dial (23 x 2 = 46).

   This tells us that at this rate, it would take 46 seconds to consume one cu. ft. of gas. This tells us that in one hour, the furnace would consume 78 cu. ft. of gas. (3600/46 = 78) The typical value range for 1 cu. ft. of natural gas is around 1025 BTU. Check with your gas utility, if possible. In this example, the furnace is consuming 80,000 BTUH. **NOTE:** The final manifold pressure cannot vary by more than ± 0.2" w.c. for Natural from the specified setting. Consult your local gas supplier if additional input rate adjustment is required.
4. Turn ON gas and relight appliances turned off in step 1. Ensure all the appliances are functioning properly and that all pilot burners (if applicable) are operating.

Temperature Rise

Air temperature rise is the temperature difference between supply and return air. The proper amount of temperature rise is usually obtained when the unit is operated at the rated input with the "as shipped" blower speed. If the correct amount of temperature rise is not obtained, it may be necessary to change the blower speed.

Temperature rise must be within the range specified on the unit rating plate. An incorrect temperature rise may result in condensing in or overheating of the heat exchanger. An airflow and temperature rise table is provided in the Specification Sheet applicable to your model.

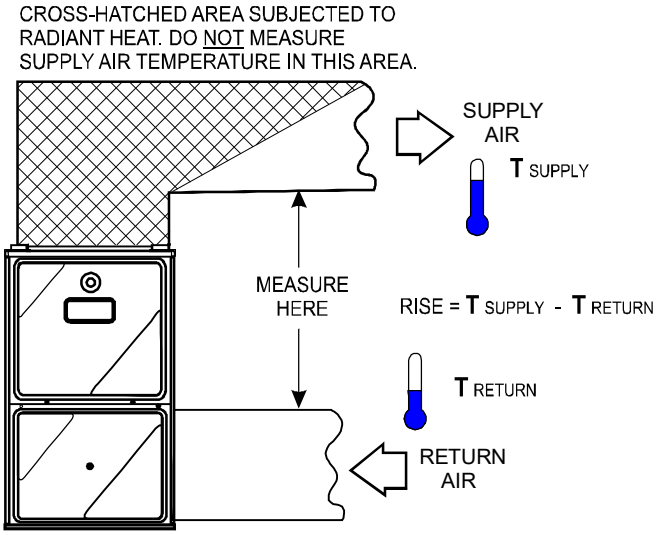

Temperature Rise Measurement

Figure 36

1. Operate furnace with burners firing approximately 15 minutes. Ensure all registers are open and all duct dampers are in their final (fully or partially open) position.
2. Place thermometers in the return and supply ducts as close to the furnace as possible. Thermometers must not be influenced by radiant heat by being able to "see" the heat exchanger.
3. Subtract the return air temperature from the supply air temperature to determine the air temperature rise. Allow adequate time for thermometer readings to stabilize.
4. Adjust temperature rise by adjusting the circulator blower speed. Increase blower speed to reduce temperature rise. Decrease blower speed to increase temperature rise.

WARNING

To avoid personal injury or death due to electrical shock, turn OFF power to the furnace before changing speed taps.

Operational Checks

WARNING

To avoid personal injury or death, do not remove any internal compartment covers or attempt any adjustment. Electrical components are contained in both compartments. Contact a qualified service agent at once if an abnormal operation should develop.

Checking Duct Static

Refer to your furnace rating plate for the maximum ESP (external duct static) rating.

Total external static refers to everything external to the furnace cabinet. Cooling coils, filters, ducts, grilles, registers must all be considered when reading your total external static pressure. The supply duct pressure must be read between the furnace and the cooling coil. This reading is usually taken by removing the "A" shaped block off plate from the end on the coil; drilling a test hole in it and reinstalling the block off plate. Take a duct static reading at the test hole. Tape up the test hole after your test is complete. The negative pressure must be read between the filter and the furnace blower.

Too much external static pressure will result in insufficient air that can cause excessive temperature rise. This can cause limit switch tripping and heat exchanger failure.

To determine total external duct static pressure, proceed as follows;

1. With clean filters in the furnace, use a manometer to measure the static pressure of the return duct at the inlet of the furnace. (Negative Pressure)
2. Measure the static pressure of the supply duct. (Positive Pressure)
3. The difference between the two numbers is .4" w.c.

   Example:
   static reading from return duct = -.1" w.c.
   static reading from supply duct = .3" w.c.
   total external static pressure on this system = .4" w.c.

NOTE: Both readings may be taken simultaneously and read directly on the manometer if so desired. If an air conditioner coil or Electronic Air Cleaner is used in conjunction with the furnace, the readings must also include theses components, as shown in the following drawing.

4. Consult proper tables for the quantity of air.

If the total external static pressure exceeds the maximum listed on the furnace rating plate, check for closed dampers, registers, undersized and/or oversized poorly laid out duct work. The temperature rise of the furnace must be within the temperature rise range listed on the furnace rating plate.

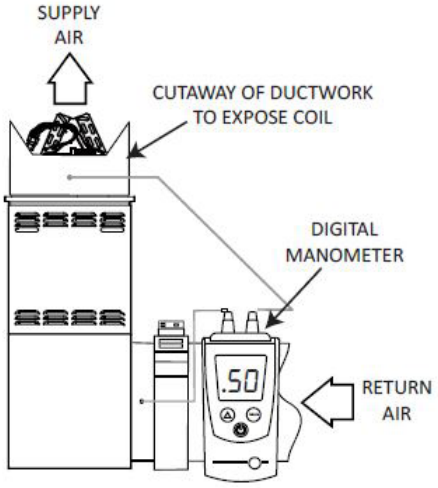

Checking Static Pressure (80% Furnace Shown)
Figure 37

Safety Circuit Description

General

WARNING

To avoid personal injury or death, do not remove any internal compartment covers or attempt any adjustment. Electrical components are contained in both compartments. Contact a qualified service agent at once if an abnormal operation should develop.

WARNING

DO NOT BYPASS SAFETY DEVICES

A number of safety circuits are employed to ensure safe and proper furnace operation. These circuits serve to control any potential safety hazards and serve as inputs in the monitoring and diagnosis of abnormal function. These circuits are continuously monitored during furnace operation by the integrated control module.

Integrated Control Module

The integrated control module is an electronic device which controls all furnace operations. Responding to the thermostat, the module initiates and controls normal furnace operation, and monitors and addresses all safety circuits. If a potential safety concern is detected, the module will take the necessary precautions and provide diagnostic information through an LED.

Primary Limit

The primary limit control is located on the partition panel and monitors heat exchanger compartment temperatures. It is a normally closed (electrically), automatic reset, temperature activated sensor. The limit guards against the overheating resulting from insufficient air passing over the heat exchanger.

Auxiliary Limit

The auxiliary limit control is located either on or near the circulator blower and monitors heat exchanger compartment temperatures. The control is a normally closed (electrically), automatic reset, temperature activated sensor. It guards against overheating resulting from insufficient air passing over the heat exchanger. The auxiliary limit control is suitable for both horizontal right and horizontal left installations. Regardless of airflow direction, it does not need to be relocated.

Burner Temperature Switch

The burner temperature switch is mounted on the burner assembly to monitor the burner box temperature. It is normally closed (electrically), auto-reset sensor. This switch guards against the burner flames not being properly drawn into the heat exchanger.

Pressure Sensor

The pressure sensor is mounted near induced draft blower. Its function is to regulate the induced draft blower's speed in order to maintain proper air-fuel ratio for clean and reliable combustion. The pressure sensor also guards against insufficient airflow (combustion air and flue products) through the heat exchanger.

Flame Sensor

The flame sensor is a probe mounted near the burner assembly which uses the principle of flame rectification to determine the presence or absence of flame.

Maintenance

WARNING

To avoid electrical shock, injury or death, disconnect electrical power before performing any service or maintenance. Only qualified servicer should service our perform maintenance.

Annual inspection

The furnace should be inspected by a qualified installer, or service agency at least once per year. This check should be performed at the beginning of the heating season. This will ensure that all furnace components are in proper working order and that the heating system functions appropriately. Pay particular attention to the following items. Repair or service as necessary.

- Flue pipe system: Check for blockage and/or leakage. Check the outside termination and the connections at and internal to the furnace.
- Heat exchanger: Check for corrosion and/or buildup within the heat exchanger passageways.
- Burners: Check for proper ignition, and flame sense.
- Wiring: Check electrical connections for tightness

and/or corrosion. Check wires for damage.

- Filters: Check filters and determine if any need to be replaced.
- R-32 Sensor Wire. Check R-32 sensor wire connection for tightness and check wire for damage.

Filters

WARNING

To avoid property damage, personal injury or death, disconnect electrical power before removing filters. Never operate furnace without a filter installed because dust and lint will build up on internal parts resulting in loss of efficiency, equipment damage and possible fire.

A return air filter is not supplied with this furnace; however, there must be a means of filtering all of the return air. The installer will supply filter(s) at the time of installation.

WARNING

HIGH VOLTAGE

To prevent property damage, personal injury or death due to electrical shock, disconnect electrical power to the furnace BEFORE removing the filer or performing any other maintenance.

Induced Draft and Circulator Blower Motors

The bearings in the induced draft blower and circulator blower motors are permanently lubricated by the manufacturer. No further lubrication is required. Check motor windings for accumulation of dust which may cause overheating. Clean as necessary.

Flame Sensor (Qualified Servicer Only)

Under some conditions, the fuel or air supply can create a nearly invisible coating on the flame sensor. This coating acts as an insulator causing a drop in the flame sense signal. If the flame sense signal drops too low the furnace will not sense flame and will lock out. The flame sensor should be carefully cleaned by a qualified servicer using steel wool. The flame sense signal should be 1 to 3 microamps.

Igniter (Qualified Servicer Only)

At room temperature, the igniter ohm reading should be from 20 - 100 ohms.

Burner

WARNING

To prevent personal injury or death, do not remove any internal compartment covers or attempt any adjustment. Electrical components are contained in both compartments. Contact a qualified service agent at once if an abnormal operation should develop.

The Ultra low NOx furnace uses a premix burner. The burner box is sealed to achieve safe and reliable operation.

Cleaning (Qualified Servicer Only)

1. Shut off electric power and gas supply to the furnace.
2. Disconnect the rollout limit wires, flame sensor wire, and disconnect the igniter plug.

CAUTION

Label all wires prior to disconnection when servicing controls. Wiring errors can causeimproper and dangerous operation. Verify proper operation after servicing.

3. Do not remove burner or other components.
4. Clean cabinet and around the inducer blower motor and burner box.
5. Reconnect wiring.
6. Turn on electric power and gas supply to the furnace.
7. Check furnace for proper operation. Refer to "*Operational Checks*" section to verify burner flame characteristics.

Before Leaving an Installation

- Cycle the furnace with the thermostat at least three times. Verify cooling and fan only operation.
- Review the Owner's Manual with the homeowner and discuss proper furnace operation and maintenance.
- Leave literature packet near furnace.

Repair and Replacement Parts

- When ordering any of the listed functional parts, be sure to provide the furnace model, manufacturing, and serial numbers with the order.
- Although only functional parts are shown in the parts list, all sheet metal parts, doors, etc. may be ordered by description.
- Parts are available from your distributor.

Functional Parts List-

Gas Valve	Blower/Collector Box Gasket
Natural Gas Orifice	Primary Limit Switch
Burner Assembly	Burner Temperature Switch
Hot Surface Igniter	Auxiliary Limit Switch
Flame Sensor	Heat Exchanger
Gas Manifold	Door Switch
Ignition Control	Transformer
Blower Mounting Bracket	Blower Wheel
Pressure Sensor	Blower Housing
Pressure Sensor Hose	Blower Cutoff
Induced Draft Blower	Blower Motor
Integrated Control Module	Motor Mount Bracket
Burner Box Gasket	

Component ID

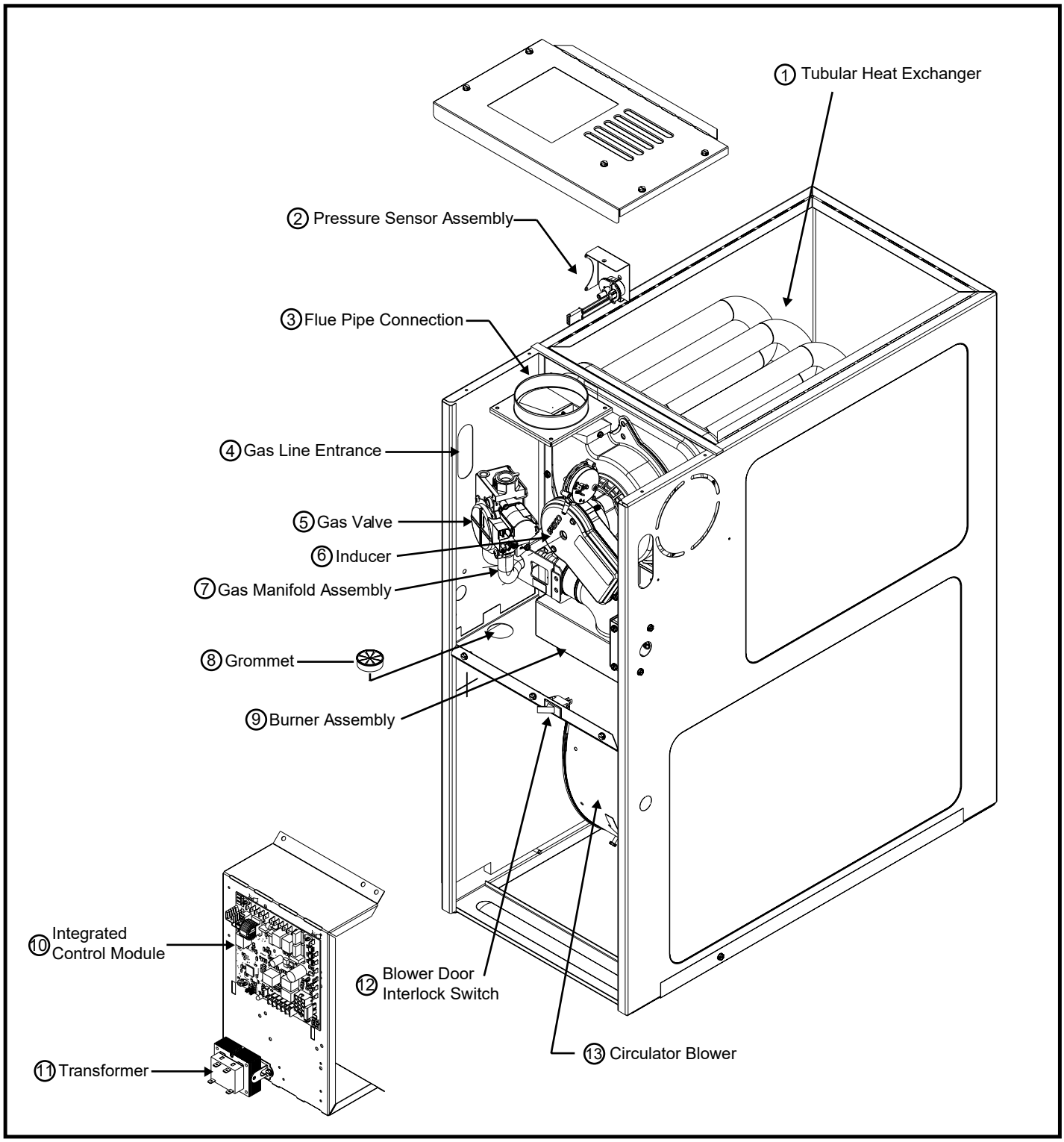

1 Tubular Heat Exchanger
2 Pressure Switch
3 Flue Pipe Connection
4 Gas Line Entrance
5 Gas Valve
6 Inducer
7 Gas Manifold Assembly
8 Wiring Harness Grommet
9 Burner Assembly
10 Integrated Control Module
11 Transformer
12 Blower Door Interlock Switch
13 Circulator Blower

Menu Options

LED Display	Menu Description
bSt	Enable or disable inverter boost operation. (Compressor speed may increase when this feature is on) (inverter only)
btt	Boost mode will operate above this selected temperature. On = boost mode always on (default = 105°F) (inverter only)
CAP	Cooling Airflow Profile setting (default = profile D shown as 4)
CbP	Heat Pump compressor lockout temperature. Furnace will act as primary heat source below this temperature. (Default = 45° F)
CdL	Compressor off delay at the beginning and end of a defrost cycle. (default = 30 seconds)
CFd	Cooling Airflow Off Delay Time. (default = 60 seconds)
CLr	Resets all cooling settings to factory default.
Cnd	Cooling Airflow On Delay Time (default = 5 seconds)
Cr	Control Firmware Revision Number
Cr9	Enable or disable inverter charge mode.
CrP	Select the range that includes the desired compressor RPS for inverter cooling operation. See inverter manual for menu options
CrS	Maximum Compressor RPS for cooling mode. (inverter only)
CSt	Percentage of high stage cooling airflow to run during low stage operation. (default = 70%)
CtF	Cooling Airflow Trim (default 0%)
CtH	High Cooling Airflow Trim for inverter units. See inverter manual for menu options and defaults
CtI	Intermediate Cooling Airflow Trim for inverter units. See inverter manual for menu options and defaults
CtL	Low Cooling Airflow Trim for inverter units. See inverter manual for menu options and defaults
dFI	Compressor run time between defrost cycles. (default = 30 minutes) (2 stage units)
dHE	Enables or disables dehumidification feature in the outdoor unit.
dHL	Select "1" to enable dehumidification when the thermostat DH terminal is energized. Select "0" to enable dehumidification when the thermostat DH terminal is de-energized. (default = 1)
dHS	Gas heat operation during defrost. 1 = low heat, 2 (default) = high
FCL	View 6 most recent fault codes and Clear Fault Codes if desired (outdoor communicating units)
FdF	Force system into a defrost cycle (inverter units)
FSd	Constant Fan Speed as percent of maximum airflow. Default = 25%
gAF	Gas Heat Airflow (percentage of maximum system airflow)
gFd	Gas Heat Fan Off Delay (default = 90 seconds)
gnd	Gas Heat Fan On Delay (default = 30 seconds)
gPt	Enables gas heat at 100% for pressure testing during commissioning.
gSt	Percentage of high stage gas heating airflow to run during low stage gas heat operation. (default = 70%)
F 10	Last 10 Faults
A2U	A2L Function Verification
A2E	A2L Function Enabled

LED Display	Menu Description
gtF	Gas Heat Airflow Trim (default = 0%)
Hdi	Maximum Compressor Run Time Between Defrost Cycles (default = 120 minutes)
HFd	Heat Pump Heating Airflow Off Delay Time (default = 60 seconds)
Hnd	Heat Pump Heating Airflow On Delay Time (default = 5 seconds)
HrP	Select the range that includes the desired compressor RPS for inverter heating operation. See inverter manual for menu options
HrS	Maximum Compressor RPS for Heating Mode (inverter only)
Hrt	Reset all heat pump heating settings to factory default.
HSt	Percentage of high stage heat pump heating airflow to run during low stage operation. (default = 70%)
HtF	Heat Pump Indoor Airflow Trim (default = 0%)
HtH	High Heating Airflow Trim for Inverter Units. See inverter manual for menu options and defaults
HtI	Intermediate Heating Airflow Trim for Inverter Units. See inverter manual for menu options and defaults
HtL	Low Heating Airflow Trim for Inverter Units. See inverter manual for menu options and defaults
LbF	View 6 most recent fault codes and clear all fault codes if desired. (furnace)
Lrn	Restart communications between the indoor and outdoor unit.
OdS	Select the number of stages for the non-communicating outdoor unit. Default = OFF meaning no outdoor unit.
PPd	Enable Pump Down Mode
rFd	Resets furnace settings to factory defaults.
SCt	Maximum Current Option (system will limit capacity to percentage of maximum current) (default = 100%)
Sr	Control Shared Data Revision Number
Srt	Resets all outdoor unit settings to factory defaults.
SVt	System Verification Test (inverters only)
ton	Indoor Airflow for non-communicating outdoor units. (values based on 400CFM per ton) (default = 3.0 Ton)
Utr	Select Outdoor Unit Elevation (SL=same level, OL = outdoor lower, IL = indoor lower) Default = Outdoor Lower
CFS	1 = system will try to satisfy the thermostat quickly. 5 (default) = system will try to satisfy the thermostat more slowly.
t9t	Menu is enabled if the SFC menu is set to 6. Select the target time the system will attempt to satisfy the thermostat.
SUP	Menu is enabled if the SFC menu is set to 6. Select the percentage past the target time when the system will transition to gas furnace operation during heat mode.
Ott	Menu is enabled if the SFC is set to 6. (the gas furnace will run during the next heat call if the heat pump fails to satisfy the custom target time for this number of consecutive cycles) (default = 20 cycles)
Utt	Menu is enabled if the SFC menu is set to 6. (if low stage gas heat is able to consecutively satisfy the thermostat under the set target time for this number of cycles, the system will transition to the heat pump for primary heating)
SdP	Menu is enabled if the SFC menu is set to 6. (this percentage will help determine when switching back to heat pump operation is appropriate. Default = 20%. If target time = 20 minutes, low stage furnace operation must satisfy the thermostat by less than 16 minutes. (target time - 20% default = 16 minutes).

Status Codes

LED Display	Description of System Status
1AC	Compressor Cooling, Low Stage (non-communicating units)
2AC	Compressor Cooling, High Stage (non-communicating units)
1HP	Compressor Heat, Low Stage (non-communicating units)
2HP	Compressor Heat, High Stage (non-communicating units)
AC	Compressor Cooling, Single-Stage (single stage non-comm. units)
AC 1	Compressor Cooling, Low Stage (communicating units)
AC2	Compressor Cooling, High Stage (communicating units)
dF 1	Defrost, Low Stage Gas Heat
dF2	Defrost, High Stage Gas Heat
dHU	Dehumidification
FAn	Constant Fan
GH 1	Gas Heat, Low Stage
GH2	Gas Heat, High Stage
HP	Compressor Heat, Single-Stage (single stage non-comm. units)
HP 1	Compressor Heat, Low Stage (Communicating Units)
HP2	Compressor Heat, High Stage (Communicating Units)
I dL	Idle
uAC	Inverter Cooling
uHP	Inverter Heating

Troubleshooting Chart

Symptom	LED Status	Fault Description	Corrective Actions
	d0	Equipment lacks shared data	Populate shared data set using memory card
	I dL	Normal operation	None
Furnace fails to operate	None	No 115 power to furnace or no 24 volt power to integrated control module	Restore high voltage power to furnace and integrated control module.
Integrated control module LED display provides no signal		Blown fuse or tripped circuit breaker	Replace non-functional integrated control module.
		Integrated control module is non- functional	
Furnace fails to operate	Eb0	Circulator blower motor is not running when it should be running	Tighten or correct wiring connection
			Verify continuous circuit through inductor
			Replace if open or short circuit
			Check circulator blower motor, replace if necessary
Furnace fails to operate	Eb 1	Integrated control module has lost communications with circulator blower motor	Tighten or correct wiring connection
			Check circulator blower motor. Replace if necessary
			Check integrated control module, replace if necessary
Furnace fails to operate	Eb2	Circulator blower motor horse power in shared data set does not match circulator blower motor horse power.	Verify circulator blower motor horse power match with nameplate, replace if necessary
			Verify shared data set is correct for the specific model, re-populate data using correct memory card if required
Furnace operates at reduced performance	Eb3	Circulator blower motor is operating in a power, temperature, or speed limiting condition	Check filters for blockage, clean filters or remove obstruction
Airflow delivered is less than expected			Check ductwork for blockage and verify all registers are fully open
			Verify ductwork is appropriately sized for system, resize and/or replace ductwork if necessary
Furnace fails to operate	Eb4	Circulator blower motor senses a loss of rotor control	Check filters, filter grille, registers, duct system and equipment inlet/outlet for blockage, make necessary corrections and retest
		Circulator blower motor senses high current	
Furnace fails to operate	Eb5	Circulator blower motor fails to start 10 consecutive times	Check circulating blower for obstructions
			Repair or replace blower motor or wheel as required
			Check circulating blower shaft for proper rotation
Furnace fails to operate	Eb6	Circulator blower motor shuts down for over or under voltage condition	Check voltage to furnace and verify within nameplate specified range
		Circulator blower motor shuts down due to over temperature condition on power module	
Furnace fails to operate	Eb7	Circulator blower motor lacks information to operate properly	Check for locked rotor condition
		Motor fails to start 40 consecutive times	Check integrated control module and verify it is populated with the correct shared data
Furnace operates at reduced performance or operates on low stage when high stage is expected	Eb9	Airflow is lower than demanded	Check filters for blockage, clean filters or remove obstruction
			Check ductwork for blockage, remove obstruction and verify all registers are fully open
			Verify ductwork is appropriately sized for system, resize and/or replace ductwork if necessary

Troubleshooting Chart

Symptom	LED Status	Fault Description	Corrective Actions
Furnace fails to operate	E 1b	Analog Pressure Sensor Reference Error. APS reference is out of the range (5.0+/-0.2)V for 5 seconds	Verify electrical connections to pressure sensor
Furnace fails to operate	E 1c	Analog Pressure Sensor Null Error. Inconsistent Pressure reading with inducer OFF	Verify electrical connections to pressure sensor
Furnace fails to operate	E 1d	Analog Pressure Sensor Span Error. Inconsistent pressure reading with inducer ON	Verify electrical connections to pressure sensor
Furnace fails to operate	E 1E	Analog Pressure Error (Blocked Vent Error)	Need to check the APS Sensor or its connection if this error is occurred. The failure conditions occur as per the following for 5 seconds: 1. The vent is blocked, and the pressure could not reach (lower than) the target pressure when inducer stayed at maximum RPM which stored in Shared Data. 2. The vent is blocked, and the pressure could not reach (higher than) the target pressure when inducer stays at the minimum RPM (Pressure Switch Min Limit). 3. APS fault causes the pressure fixed at a value lower than the target pressure when inducer stayed at maximum RPM which stored in Shared Data. 4. APS fault causes the pressure fixed at a value higher than the target pressure when inducer stayed at minimum RPM (Pressure Switch Min. Limit).
Furnace fails to Operate	E 1F	Analog Pressure Sensor, Input Error	Check the APS Sensor or its connection if this error is occurred. APS input voltage is out of the below ranges for 5 seconds. 1. If 2" is selected, the voltage range shall be from (0.25-0.06)V to (4+0.06)V. 2. If 4" is selected, the voltage range shall be from (0.5-0.06)V to (4.5+0.06)V.
Furnace fails to operate	E 10	Grounding fault Poor neutral connection	Verify neutral wire connection to furnace & continuity to ground source
Furnace fails to operate	E 11	Open roll out switch	Check for correct gas pressure Check for correct burner alignment Check for and correct burner restriction
Furnace fails to operate	Ed0	Data not yet on network	Populate shared data set using memory card
Operation different than expected or no operation	Ed 1	Invalid memory card data	Verify shared data set is correct for the specific model, re-populate data using correct memory card if required

Troubleshooting Chart

Symptom	LED Status	Fault Description	Corrective Actions
Furnace fails to operate	EE0		Locate and correct gas interruption
		Furnace lockout due to an excessive number of ignition “retries” (3 total)	Check front cover pressure switch operation and verify proper drainage (hose, wiring, contact operation), correct if necessary
		Failure to establish flame	Replace or realign igniter
		Loss of flame after establishment	Check flame sense signal, sand sensor if coated and/or oxidized
			Check flue piping for blockage, proper length, elbows, and termination
			Verify proper induced draft blower performance
Furnace fails to operate	EE 1	Pressure switch circuit is closed at start of heating cycle	Replace Pressure switch
		Pressure switch contacts sticking	Repair short in wiring
		Short in pressure switch circuit wiring	
Induced draft blower runs continuously with no furnace operation	EE2	Pressure switch circuit is not closed	Inspect pressure switch hose, repair/replace if necessary
		Pressure switch hose blocked pinched, or connected improperly	Inspect flue for blockage, proper length, elbows, and termination
		Blocked flue or weak induced draft blower	Check induced draft blower performance, correct as necessary
		Incorrect pressure switch set point or malfunctioning switch contacts	Check pressure switch operation, replace as needed
		Loose or improperly connected wiring	Tighten or correct wiring connection
Circulator blower runs continuously	EE3	Primary limit circuit is open	Check filters and ductwork for blockage
		Insufficient conditioned air over the heat exchanger	Clean filters or remove obstruction
No furnace operation		Blocked filters, restrictive ductwork, improper circulator blower speed, or failed circulator blower motor	Check circulator blower speed and performance
		Loose or improperly connected wiring in high limit circuit	Correct speed or replace blower motor if necessary
			Tighten or correct wiring connection
Induced draft blower and circulator blower runs continuously	EE4	Flame sensed with no call for heat	Correct short at flame sensor or in flame sensor wiring
		Short to ground in flame sense circuit	Check for lingering or lazy flame
No furnace operation		Lingering burner flame	Verify proper operation of gas valve
		Slow closing gas valve	
No furnace operation	EE5	Open fuse	Replace fuse
		Short in low voltage wiring	Locate and correct short in low voltage wiring
Normal furnace operation	EE6	Flame sense micro amp signal is low	Clean flame sensor if coated or oxidized
		Flame sensor is coated/oxidized	Inspect for proper flame sensor alignment
		Flame sensor incorrectly positioned in burner fame	Check inlet air piping for blockage, proper length, elbows, and termination
		Lazy burner flame due to improper gas pressure or combustion air	Compare current gas pressure to rating plate and adjust as needed
Furnace fails to operate	EE7	Problem with igniter circuit	Check and correct wiring from integrated control module to igniter
		Improperly connected or shorted igniter	Diagnose and replace shorted igniter as needed
		Poor unit ground	Verify and correct unit ground wiring if needed
		Igniter relay fault on integrated control module	Check igniter output from control, replace if necessary

Troubleshooting Chart

Symptom	LED Status	Fault Description	Corrective Actions
Furnace fails to operate	EEA	Polarity of 115 volt AC is reversed	Correct polarity, check and correct wiring if necessary
		Poor unit ground	Verify proper ground, correct if necessary
Furnace fails to operate	EEb	Gas valve is not energized when it should be	Check Wiring in gas valve circuit
		External Gas Valve Error	Replace integrated control board
Furnace fails to operate	EEC	Gas valve is energized when it should not be	Check wiring in gas valve circuit
		Internal Gas Valve Error	Replace integrated control board
Furnace fails to operate	EEd	Aux limit switch open (blower compartment)	Check filters and ductwork for blockage, clean filters or remove obstruction
			Check circulator blower speed and performance, correct speed or replace blower motor if necessary
			Tighten or correct wiring connection
Furnace fails to operate	EEF	Aux switch (condensate switch) open	Check evaporator drain pan, trap, piping
Furnace stops heating and only the fan is operating	EAF	Furnace has lost communication with the R-32 sensor and the furnace is in mitigation mode.	Verify wire connection to R-32 sensor is not loose. Verify that the R-32 sensor wire is not damaged. Replace R-32 Sensor.
Furnace stops heating and only the fan is operating	EA0	R-32 sensor has detected a refrigerant leak and furnace is in mitigation mode.	Investigate the indoor coil for a refrigerant leak. Furnace will resume normal operation once a leak is not detected and the 5 minute delay period is over.
Furnace stops heating and only the fan is operating	EA1	R-32 sensor has detected a fault and the furnace is in mitigation mode.	Investigate the R-32 sensor. Replace the R-32 sensor.
Furnace stops heating and only the fan is operating	EA2	A2L relay in the furnace control board has detected a fault and the furnace is in mitigation mode.	Investigate A2L relay. Cycle power on the furnace. Replace integrated control board.

Fault Code Recall

Accessing the furnace's diagnostic menu provides access to the last six faults detected by the furnace. Faults are stored most recent to least recent, Any consecutively repeated fault is stored a maximum of three times. Example: A clogged return air filter causes the furnace limit to trip repeatedly. The control will only store this fault the first three consecutive times the fault occurs. NOTE: It is highly recommended that the fault history be cleared when performing maintenance or servicing the furnace.

WIRING DIAGRAM

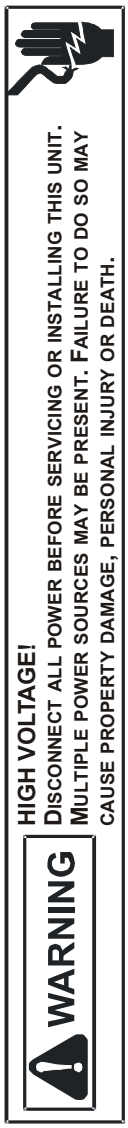

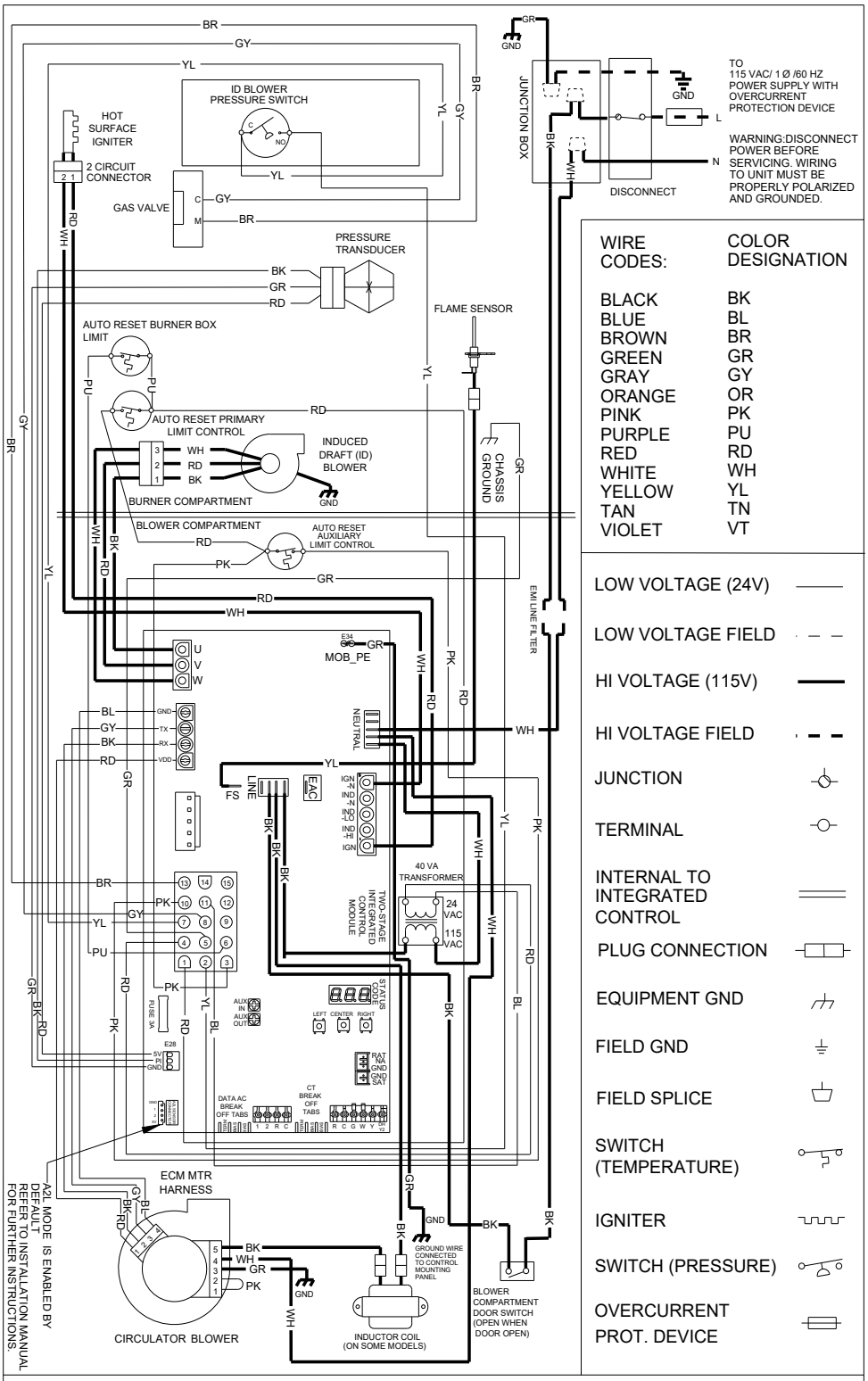

WIRE CODES:	COLOR DESIGNATION
BLACK	BK
BLUE	BL
BROWN	BR
GREEN	GR
GRAY	GY
ORANGE	OR
PINK	PK
PURPLE	PU
RED	RD
WHITE	WH
YELLOW	YL
TAN	TN
VIOLET	VT

LOW VOLTAGE (24V)

LOW VOLTAGE FIELD

HI VOLTAGE (115V)

HI VOLTAGE FIELD

JUNCTION

TERMINAL

INTERNAL TO INTEGRATED CONTROL

PLUG CONNECTION

EQUIPMENT GND

FIELD GND

FIELD SPLICE

SWITCH (TEMPERATURE)

IGNITER

SWITCH (PRESSURE)

OVERCURRENT PROT. DEVICE

NOTES:

1. MANUFACTURER'S SPECIFIED REPLACEMENT PARTS MUST BE USED WHEN SERVICING.
2. IF ANY OF THE ORIGINAL WIRE AS SUPPLIED WITH THE FURNACE MUST BE REPLACED, IT MUST BE REPLACED WITH WIRING MATERIAL HAVING A TEMPERATURE RATING OF AT LEAST 105° C. USE COPPER CONDUCTORS ONLY.
3. UNIT MUST BE PERMANENTLY GROUNDED AND CONFORM TO N.E.C. AND LOCAL CODES.
4. TO RECALL THE LAST 6 FAULTS, MOST RECENT TO LEAST RECENT, DEPRESS SWITCH FOR MORE THAN 2 SECONDS WHILE IN STANDBY (NO THERMOSTAT INPUTS)
5. HUMIDIFIER INSTALLATION OPTIONS: USE HUM TERMINAL TO RUN HUMIDIFIER DURING HEAT CALL (COMMUNICATING OR LEGACY MODES). USE HUM-IN AND HUM-OUT TERMINALS TO RUN HUMIDIFIER DURING HEAT CALL (COMMUNICATING MODE OR LEGACY MODE) OR INDEPENDENTLY FROM HEAT CALL (COMMUNICATING MODE ONLY - SETUP IS DONE WITHIN COMMUNICATING THERMOSTAT)
6. WHEN THIS FURNACE IS PAIRED WITH NON R-32 REFRIGERANT SYSTEMS, DEFAULT SETTINGS WILL NEED TO BE CHANGED. REFER TO INSTALLATION MANUAL FOR FURTHER INSTRUCTIONS.

0140F20039-A

Wiring is subject to change. Always refer to the wiring diagram on the unit for the most up-to-date wiring.

START-UP CHECKLIST

Furnace				
	Model Number	_____		
	Serial Number	_____		
ELECTRICAL				
Line Voltage (Measure **L1 to N** and **N to Ground** Voltage)	L - N	_____		
	N - G	_____		
Secondary Voltage (Measure Transformer Output Voltage)	R - C	_____		
Blower Amps		_____		
BLOWER EXTERNAL STATIC PRESSURE				
Return Air Static Pressure		_____	IN. W.C.	
Supply Air Static Pressure		_____	IN. W.C.	
Total External Static Pressure (Ignoring +/- from the reading above, add total here)		_____	IN. W.C.	
TEMPERATURES				
Return Air Temperature (Dry bulb / Wet bulb)		_____	DB °F	_____ WB °F
Cooling Supply Air Temperature (Dry bulb / Wet bulb)		_____	DB °F	_____ WB °F
Heating Supply Air Temperature		_____	DB °F	
Temperature Rise		_____	DB °F	
Delta T (Difference between Supply and Return Temperatures)		_____	DB °F	
GAS PRESSURES				
Gas Inlet Pressure		_____	IN. W.C.	
Gas Manifold Pressure (Low Fire)		_____	IN. W.C.	
Gas Manifold Pressure (High Fire)		_____	IN. W.C.	
Gas Type (NG) = Natural Gas / (LP) = Liquid Propane		_____		
Additional Checks				
Check wire routings for any rubbing		_____		
Check for kinked pressure switch tubing.		_____		
Check flue elbow for alignment and clamp tightness.		_____		
Check screw tightness on blower wheel.		_____		
Check factory wiring and wire connections.		_____		
Check product for proper clearances as noted by installation instructions		_____		
Check R-32 sensor wire is connected properly (if applicable)		_____		
°F to °C formula: (°F - 32) divided by 1.8 = °C	**°C to °F formula: (°C multiplied by 1.8) + 32 = °F**			

CUSTOMER FEEDBACK
Daikin Comfort Technologies is very interested in all product comments.
Please fill out the feedback form on the following link:
https://daikincomfort.com/contact-us
You can also scan the QR code on the right to be directed to the feedback page.

PRODUCT REGISTRATION
Thank you for your recent purchase. Though not required to get the protection of the standard warranty, registering your product is a relatively short process, and entitles you to additional warranty protection, except that failure by California and Quebec residents to register their product does not diminish their warranty rights. The duration of warranty coverages in Texas and Florida differs in some cases.

For Product Registration, please register by following this link:
https://daikincomfort.com/owner-support/product-registration
You can also scan the QR code on the right to be directed to the Product Registration page.

Our continuing commitment to quality products may mean a change in specifications without notice.

©2024 ***DAIKIN COMFORT TECHNOLOGIES MANUFACTURING, L.P.***
19001 Kermier Rd., Waller, TX 77484
www.daikincomfort.com