DAIKIN

INSTALLATION INSTRUCTIONS

DC80TN / DM80TN
Gas Furnace
CATEGORY I
CATÉGORIE I

These furnaces comply with requirements embodied in the American National Standard / National Standard of Canada ANSI Z21.47·CSA-2.3 Gas Fired Central Furnaces.

Intertek

Installer: Affix all manuals adjacent to the unit.

WARNING

ONLY PERSONNEL THAT HAVE BEEN TRAINED TO INSTALL, ADJUST, SERVICE OR REPAIR(HEREINAFTER, "SERVICE") THE EQUIPMENT SPECIFIED IN THIS MANUAL SHOULD SERVICE THE EQUIPMENT. THE MANUFACTURER WILL NOT BE RESPONSIBLE FOR ANY INJURY OR PROPERTY DAMAGE ARISING FROM IMPROPER SERVICE OR SERVICE PROCEDURES. IF YOU SERVICE THIS UNIT, YOU ASSUME RESPONSIBILITY FOR ANY INJURY OR PROPERTY DAMAGE WHICH MAY RESULT. IN ADDITION, IN JURISDICTIONS THAT REQUIRE ONE OR MORE LICENSES TO SERVICE THE EQUIPMENT SPECIFIED IN THIS MANUAL, ONLY LICENSED PERSONNEL SHOULD SERVICE THE EQUIPMENT.
IMPROPER INSTALLATION, ADJUSTMENT, SERVICING OR REPAIR OF THE EQUIPMENT SPECIFIED IN THIS MANUAL, OR ATTEMPTING TO INSTALL, ADJUST, SERVICE OR REPAIR THE EQUIPMENT SPECIFIED IN THIS MANUAL WITHOUT PROPER TRAINING MAY RESULT IN PRODUCT DAMAGE, PROPERTY DAMAGE, PERSONAL INJURY OR DEATH.

WARNING

DO NOT BYPASS SAFETY DEVICES.

RECOGNIZE THIS SYMBOL AS A SAFETY PRECAUTION.

ATTENTION INSTALLING PERSONNEL
As a professional installer you have an obligation to know the product better than the customer. This includes all safety precautions and related items.

Prior to actual installation, thoroughly familiarize yourself with this Instruction Manual. Pay special attention to all safety warnings. Often during installation or repair it is possible to place yourself in a position which is more hazardous than when the unit is in operation.

Remember, it is your responsibility to install the product safely and to know it well enough to be able to instruct a customer in its safe use.

Safety is a matter of common sense...a matter of thinking before acting. Most dealers have a list of specific good safety practices...follow them.

The precautions listed in this Installation Manual are intended as supplemental to existing practices. However, if there is a direct conflict between existing practices and the content of this manual, the precautions listed herein take precedence.

***NOTE:** Please contact your distributor or our website for the applicable Specification Sheet referred to in this manual.

80% HEX

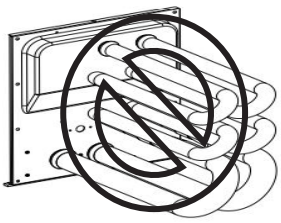

DO NOT LIFT PRODUCT USING HEAT EXCHANGER

Our continuing commitment to quality products may mean a change in specifications without notice.
© 2021-2022 **DAIKIN MANUFACTURING COMPANY, L.P.**
19001 Kermier Rd., Waller, TX 77484
wwww.daikincomfort.com

IOD-2026B
04/2022

TABLE OF CONTENTS

Safety Considerations 2
Product Application 4
Location Requirements & Considerations..... 5
Combustion & Ventilation Air Requirements 8
Masonry Chimneys 10
Electrical Connections 10
Gas Supply and Piping..... 10
Circulating Air..... 14
Electrical..... 15
Circulating Air & Filters 18
Airflow Tables..... 23
2 Stage Status Codes 34
2 Stage Troubleshooting Codes 36
Wiring Diagram 38
Maintenance 39
Media Air Filter or Electronic Air Cleaner Removal..... 39
Before Leaving an Installation 40
Repair and Replacement Parts 40

Safety Considerations

Adhere to the following warnings and cautions when installing,adjusting, altering, servicing, or operating the furnace. To ensure proper installation and operation, thoroughly read this manual for specifics pertaining to the installation and application of this product.

WARNING

FIRE OR EXPLOSION HAZARD

Failure to follow the safety warnings exactly could result in serious injury, death or property damage.

Never test for gas leaks with an open flame.
Use a commercially available soap solution made specifically for the detection of leaks to check all connections. A fire or explosion may result causing property damage, personal injury or loss of life.

AVERTISSEMENT

RISQUE D'INCENDIE OU D'EXPLOSION

Si les consignes de sécurité ne sont pas suivies à la lettre, cela peut entraîner la mort, de graves blessures ou des dommages matériels.

Ne jamais vérifier la présence de fuites de gaz au moyen d'une flamme nue. Vérifier tous les raccords en utilisant une solution savonneuse commerciale conçue spécialement pour la détection de fuites. Un incendie ou une explosion risque de se produire, ce qui peut entraîner la mort, des blessures ou des dommages matériels.

This furnace is manufactured for use with natural gas. It may be field converted to operate on L.P. gas by using the appropriate L.P. conversion kit listed in the **PROPANE GAS/ HIGH ALTITUDE INSTALLATIONS section** of this manual

Install this furnace only in a location and position as specified in **LOCATION REQUIREMENTS & CONSIDERATIONS section and INSTALLATION POSITIONS section** of this manual.

Provide adequate combustion and ventilation air to the furnace as specified in **COMBUSTION & VENTILATION AIR REQUIREMENTS section of this manual.**

Combustion products must be discharged to the outdoors. Connect this furnace to an approved vent system only, as specified in **Category 1 Venting** section of this manual.

Never test for gas leaks with an open flame. Use a commercially available soap solution made specifically for the detection of leaks to check all connections, as specified in **GAS SUPPLY AND PIPING** section of this manual.

Always install a furnace to operate within the furnace's intended temperature-rise range with a duct system which has external static pressure within the allowable range, as specified on the furnace rating plate and **OPERATIONAL CHECKS section** of these instructions.

When furnace duct(s) supply air outside the space containing the furnace, a return air duct must terminate in the same space as the supply duct and be sealed to the furnace casing.

A gas-fired furnace for installation in a residential garage must be installed as specified in the **LOCATION REQUIREMENTS AND CONSIDERATIONS section** of this manual. This furnace may be used as a construction site heater only if certain conditions are met. These conditions are listed in the **PRODUCT APPLICATION section** of this manual.

WARNING

To prevent personal injury or death due to improper installation, adjustment, alteration, service, or maintenance, refer to this manual. For additional assistance or information, consult a qualified installer, servicer agency or the gas supplier.

WARNING

If the information in these instructions is not followed exactly, a fire or explosion may result causing property damage, personal injury or loss of life.
– Do not store or use gasoline or other flammable vapors and liquid in the vicinity of this or any other appliance.
– What to do if you smell gas:
- Do not try to light any appliance.
- Do not touch any electrical switch; do not use any phone in your building.
- Immediately call your gas supplier from a neighbor's phone. Follow the gas supplier's instructions. If you can
- not reach your gas supplier, call the fire department.

– Installation and service must be performed by a qualified installer, service agency or the gas supplier.

DANGER

CARBON MONOXIDE POISONING HAZARD

Special Warning for Installation of Furnace or Air Handling Units in Enclosed Areas such as Garages, Utility Rooms or Parking Areas

Carbon monoxide producing devices (such as an automobile, space heater, gas water heater, etc.) should not be operated in enclosed areas such as unventilated garages, utility rooms or parking areas because of the danger of carbon monoxide (CO) poisoning resulting from the exhaust emissions. If a furnace or air handler is installed in an enclosed area such as a garage, utility room or parking area and a carbon monoxide producing device is operated therein, there must be adequate, direct outside ventilation.

This ventilation is necessary to avoid the danger of CO poisoning which can occur if a carbon monoxide producing device continues to operate in the enclosed area. Carbon monoxide emissions can be (re)circulated throughout the structure if the furnace or air handler is operating in any mode.

CO can cause serious illness including permanent brain damage or death. B10259-216

DANGER
PELIGRO

RIESGO DE INTOXICACIÓN POR MONÓXIDO DE CARBONO

Advertencia especial para la instalación de calentadores ó manejadoras de aire en áreas cerradas como estacionamientos ó cuartos de servicio.

Los equipos ó aparatos que producen monóxido de carbono (tal como automóvil, calentador de gas, calentador de agua por medio de gas, etc) no deben ser operados en áreas cerradas debido al riesgo de envenenamiento por monóxido de carbono (CO) que resulta de las emisiones de gases de combustión. Si el equipo ó aparato se opera en dichas áreas, debe existir una adecuada ventilación directa al exterior.

Esta ventilación es necesaria para evitar el peligro de envenenamiento por CO, que puede ocurrir si un dispositivo que produce monóxido de carbono sigue operando en el lugar cerrado.

Las emisiones de monóxido de carbono pueden circular a través del aparato cuando se opera en cualquier modo.

El monóxido de carbono puede causar enfermedades severas como daño cerebral permanente ó muerte. B10259-216

DANGER

RISQUE D'EMPOISONNEMENT AU MONOXYDE DE CARBONE

Advertencia especial para la instalación de calentadores ó manejadoras de aire en áreas cerradas como estacionamientos ó cuartos de servicio.

Avertissement special au sujet de l'installation d'appareils de hauffage ou de traitement d'air dans des endroits clos, tets les garages, les locaux d'entretien et les stationnements. Evitez de mettre en marche les appareils produisant du monoxyde de carbone (tels que les automobile, les appareils de chauffage autonome,etc.) dans des endroits non ventilés tels que les d'empoisonnement au monoxyde de carbone. Si vous devez faire fonctionner ces appareils dans un endroit clos, assures-vous qu'il y ait une ventilation directe provenant de l'exterier.

Cette ventilation est nécessaire pour éviter le danger d'intoxication au CO pouvant survenir si un appareil produisant du monoxyde de carbone continue de fonctionner au sein de la zone confinée.

Les émissions de monoxyde de carbone peuvent etre recircules dans les endroits clos, si l'appareil de chauffage ou de traitement d'air sont en marche.

Le monoxyde de carbone peut causer des maladies graves telles que des dommages permanents au cerveau et meme la mort. B10259-216

WARNING

This product contains or produces a chemical or chemicals which may cause serious illness or death and which are known to the State of California to cause cancer, birth defects or other reproductive harms.

WARNING

Heating unit should not be utilized without reasonable routine, inspection, maintenance and supervision. If the building in which any such device is routinely inspected, maintained and monitored. In the event that the building may be exposed to freezing temperatures and will be vacant, all water-bearing pipes should be drained. The building should be properly winterized and the water source closed. In the event that the building may be exposed to freezing temperatures and will be vacant, any hydronic coil units should be drained as well and, in such case, alternative heat sources should be utilized.

WARNING

To prevent possible property damage, personal injury or death due to electrical shock, the furnace must be located to protect the electrical components from water.

WARNING

Should overheating occur or the gas supply fail to shut off, turn off the manual gas shutoff valve external to the furnace before turning off the electrical supply.

WARNING

Possible property damage, personal injury or death due to fire, explosion, smoke, soot, condensation, electrical shock, or carbon monoxide may result from improper installation, repair operation, or maintenance of this product.

WARNING

To prevent personal injury or death due to asphyxiation, this furnace must be Category I vented. Do not vent using Category III Venting.
Provisions must be made for venting combustion products outdoors through a proper venting system. This length of flue pipe could be a limiting factor in locating the furnace.

Additional Safety Considerations

- This furnace is approved for Category I Venting only.
- Provisions must be made for venting combustion products outdoors through a proper venting system. The length of flue pipe could be a limiting factor in locating the furnace.

Shipping Inspection

All units are securely packed in shipping containers tested according to International Safe Transit Association specifications. The carton must be checked upon arrival for external damage. If damage is found, a request for inspection by carrier's agent must be made in writing immediately.

The furnace must be carefully inspected on arrival for damage and bolts or screws which may have come loose in transit. In the event of damage the consignee should:

1. Make a notation on delivery receipt of any visible damage to shipment or container.
2. Notify carrier promptly and request an inspection.
3. With concealed damage, carrier must be notified as soon as possible - preferably within five days.
4. File the claim with the following support documents within a nine month statute of limitations.
   - Original or certified copy of the Bill of Lading, or indemnity bond.
   - Original paid freight bill or indemnity in lieu thereof.
   - Original or certified copy of the invoice, showing trade and other discounts or reductions.

- Copy of the inspection report issued by carrier's representative at the time damage is reported to carrier.

The carrier is responsible for making prompt inspection of damage and for a thorough investigation of each claim. The distributor or manufacturer will not accept claims from dealers for transportation damage.

Keep this literature in a safe place for future reference.

Electrostatic Discharge (ESD) Precautions

NOTE: Discharge body's static electricity before touching unit. An electrostatic discharge can adversely affect electrical components.

Use the following precautions during furnace installation and servicing to protect the integrated control module from damage. By putting the furnace, the control, and the person at the same electrostatic potential, these steps will help avoid exposing the integrated control module to electrostatic discharge. This procedure is applicable to both installed and non-installed (ungrounded) furnaces.

1. Disconnect all power to the furnace. Do not touch the integrated control module or any wire connected to the control prior to discharging your body's electrostatic charge to ground.
2. Firmly touch a clean, unpainted, metal surface of the furnaces near the control. Any tools held in a person's hand during grounding will be discharged.
3. Service integrated control module or connecting wiring following the discharge process in step 2. Use caution not to recharge your body with static electricity; (i.e., do not move or shuffle your feet, do not touch ungrounded objects, etc.). If you come in contact with an ungrounded object, repeat step 2 before touching control or wires.
4. Discharge your body to ground before removing a new control from its container. Follow steps 1 through 3 if installing the control on a furnace. Return any old or new controls to their containers before touching any ungrounded object.

To The Installer

Before installing this unit, please read this manual thoroughly to familiarize yourself with specific items which must be adhered to, including but not limited to: unit maximum external static pressure, gas pressures, BTU input rating, proper electrical connections, circulating air temperature rise, minimum or maximum CFM, and motor speed connections, and venting. These furnaces are designed for Category I venting only.

WARNING

To prevent property damage, personal injury, or death due to fire, do not install this furnace in a mobile home, trailer, or recreational vehicle.

Product Application

This furnace is primarily designed for residential home-heating applications. It is NOT designed or certified for use in mobile homes, trailers or recreational vehicles. Neither is it designed or certified for outdoor applications. The furnace **must** be installed indoors (i.e., attic space, crawl space, or garage area provided the garage area is enclosed with an operating door).

This furnace can be used in the following non-industrial commercial applications:

Schools, Office Buildings, Churches, Retail Stores, Nursing Homes, Hotels/Motels, Common or Office Areas

In such applications, the furnace must be installed with the following stipulations:

- It must be installed per the installation instructions provided and per local and national codes.
- It must be installed indoors in a building constructed on site.
- It must be part of a ducted system and not used in a free air delivery application.
- It must not be used as a "make-up" air unit.
- All other warranty exclusions and restrictions apply.

This furnace may be used as a construction site heater **ONLY** if all of the following conditions are met:

- The vent system is permanently installed per these installation instructions.
- A room thermostat is used to control the furnace. Fixed jumpers that provide continuous heating CANNOT be used and can cause long term equipment damage. Bi-metal thermostats, or any thermostat affected by vibration must not be used during construction.
- Return air ducts are provided and sealed to the furnace.
- A return air temperature range between 60ºF (16ºC) and 80ºF (27ºC) is maintained.
- Air filters are installed in the system and replaced daily during construction and upon completion of construction.
- The input rate and temperature rise are set per the furnace rating plate.
- 100% outside air must be used for combustion during construction. Temporary ducting may be used to supply outside air to the furnace for combustion – do not connect this duct directly to the furnace. Size this duct according to NFPA 54/ANSI Z223.1 section for Combustion and Ventilation Air.
- The furnace heat exchanger, components, duct system, air filters and evaporator coils are thoroughly cleaned following final construction clean up by a qualified person.
- All furnace operating conditions (including ignition, input rate, temperature rise and venting) are verified by a qualified person according to these installation instructions.
- Furnace doors must be in place on the furnace while the furnace is operating in any mode.

- Damage or repairs due to failure to comply with these requirements are not covered under the warranty.

NOTE: The Commonwealth of Massachusetts requires that the following additional requirements must also be met:

- Gas furnaces must be installed by a licensed plumber or gas fitter.
- A T-handle gas cock must be used.
- If the unit is to be installed in an attic, the passageway to and the service area around the unit must have flooring.

WARNING

TO PREVENT PROPERTY DAMAGE, PERSONAL INJURY, OR DEATH DUE TO FIRE, DO NOT INSTALL THIS FURNACE IN A MOBILE HOME, TRAILER, OR RECREATIONAL VEHICLE.

To ensure proper furnace operation, install, operate and maintain the furnace in accordance with these installation and operation instructions, all local building codes and ordinances. In their absence, follow the latest edition of the National Fuel Gas Code (NFPA 54/ANSI Z223.1) and/or local plumbing or waste water codes, and other applicable codes.

A copy of the National Fuel Gas Code (NFPA 54/ANSI Z223.1) can be obtained from any of the following:

American National Standards Institute
25 West 43rd Street, 4th Floor
New York, NY 10036

National Fire Protection Association
1 Batterymarch Park
Quincy, MA 02169-7471

CSA International
8501 East Pleasant Valley
Independence, OH 44131

The rated heating capacity of the furnace should be greater than or equal to the total heat loss of the area to be heated. The total heat loss should be calculated by an approved method or in accordance with “ASHRAE Guide” or “Manual J-Load Calculations” published by the Air Conditioning Contractors of America.
In the USA, this furnace MUST be installed in accordance with the latest edition of the ANSI Z223.1 booklet entitled “National Fuel Gas Code” (NFPA 54), and the requirements or codes of the local utility or other authority having jurisdiction. Additional helpful publications available from the NFPA are, NFPA 90A - Installation of Air Conditioning and Ventilating System and NFPA 90B - Warm Air Heating and Air Conditioning System.

All venting shall be in accordance with the National Fuel Gas Code, ANSI Z223.1, or applicable local building and/or air conditioning codes.

NOTE: Furnaces with NOx screens meet the California NOx emission standards and California seasonal efficiency standards. ANNUAL inspections of the furnace and its vent system is strongly recommended.

Location Requirements and Considerations

Your unit model type determines which installation procedures must be used. For DM80TN models, you must follow instructions for Horizontal Left, Horizontal Right or Upflow installations only. These furnaces are not approved for Downflow installations.

DC80TN models may be installed in the Downflow position as well as Horizontal Left & Horizontal Right positions.

WARNING

TO PREVENT POSSIBLE EQUIPMENT DAMAGE, PROPERTY DAMAGE, PERSONAL INJURY, OR DEATH, THE FOLLOWING BULLET POINTS MUST BE OBSERVED WHEN INSTALLING THIS UNIT.

Follow the instructions listed below when selecting a furnace location. Refer also to the guidelines provided in the *Combustion and Ventilation Air Requirements.*

- Centrally locate the furnace with respect to the proposed or existing air distribution system.
- Ensure the temperature of the return air entering the furnace is between 55°F and 100°F when the furnace is heating.
- Provisions must be made for venting combustion products outdoors through a proper venting system. The length of flue pipe could be a limiting factor in locating the furnace.
- Ensure adequate combustion air is available for the furnace. Improper or insufficient combustion air can expose building occupants to gas combustion products that could include carbon monoxide. Refer to *Combustion and Ventilation Air Requirements* section.
- The furnace must be level. If the furnace is to be set on a floor that may become wet or damp at times, the furnace should be supported above the floor on a concrete base sized approximately 1-½” larger than the base of the furnace.
- Ensure upflow or horizontal furnaces are not installed directly on carpeting, or any other combustible material. The only combustible material allowed is wood.
- Exposure to contaminated combustion air will result in safety and performance-related problems. Do not install the furnace where the combustion air is exposed to the following substances:
  - chlorinated waxes or cleaners
  - chlorine-based swimming pool chemicals
  - water softening chemicals
  - deicing salts or chemicals
  - carbon tetrachloride
  - halogen type refrigerants
  - cleaning solutions (such as perchloroethylene)
  - printing inks

paint removers
varnishes
hydrochloric acid
cements and glues
antistatic fabric softeners for clothes dryers
and masonry acid washing materials

- If the furnace is used in connection with a cooling unit, install the furnace upstream or in parallel with the cooling unit coil. Premature heat exchanger failure will result if the cooling unit coil is placed ahead of the furnace.
- For vertical applications, the minimum cooling coil width shall not be less than furnace width minus 1”. Additionally, a coil installed above an upflow furnace or under a counterflow furnace may be the same width as the furnace or may be one size larger than the furnace. Example: A “C” width coil may be installed with a “B” width furnace.
- For upflow applications, the front of the coil and furnace must face the same direction.
- If the furnace is installed in a residential garage, position the furnace so that the burners and ignition source are located not less than 18 inches (457 mm) above the floor. Protect the furnace from physical damage by vehicles.
- If the furnace is installed horizontally, the furnace access doors must be vertical so that the burners fire horizontally into the heat exchanger. Do not install the unit with the access doors on the “up/top” or “down/bottom” side of the furnace.
- Do not connect this furnace to a chimney flue that serves a separate appliance designed to burn solid fuel.
- Counterflow installation over a noncombustible floor. Before setting the furnace over the plenum opening, ensure the surface around the opening is smooth and level. A tight seal should be made between the furnace base and floor by using a silicon rubber caulking compound or cement grout.
- Counterflow installation over a combustible floor. If installation over a combustible floor becomes necessary, use an accessory subbase (see Specification Sheet applicable to your model for details). A special accessory subbase must be used for upright counterflow unit installations over any combustible material including wood. Follow the instructions with the subbase for proper installations.
- Do not install the furnace directly on carpeting, tile, or other combustible material other than wood flooring. (**NOTE**: The subbase will not be required if an air conditioning coil is installed between the supply air opening on the furnace and the floor. The air conditioning coil must be downstream from the heat exchanger of the furnace.

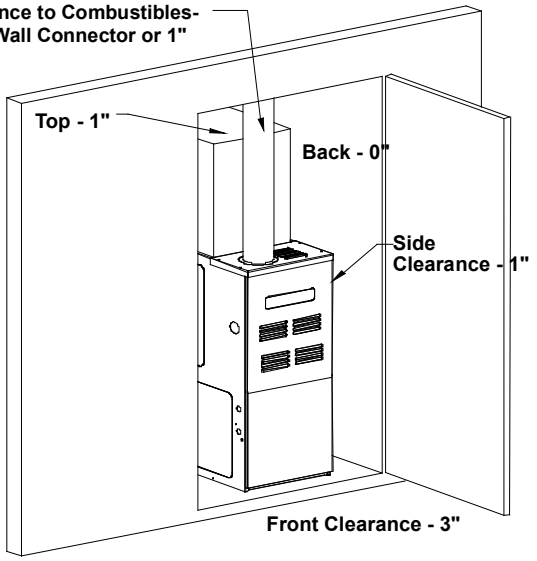

Figure 1

- Adequate combustion/ventilation air must be supplied to the closet.
- Furnace must be **completely** sealed to floor or base. Combustion/ventilation air supply pipes must terminate 12” from top of closet and 12” from floor of closet. DO NOT remove solid base plate for side return.
- Return air ducts must be **completely** sealed to the furnace and terminate outside the enclosure surfaces.

Clearances and Accessibility

Unobstructed front clearance of 24” **for servicing** is recommended.

VENT		SIDES	FRONT	BACK	TOP (PLENUM)
B1-VENT	SINGLE				
1"	6"	1"	3"	0"	1"

Top clearance for horizontal configuration - 1”

Installation Positions

DM80TN model furnaces may be installed vertically (upflow) or horizontally with left or right side down. DC80TN model furnaces may be installed vertically (downflow) or horizontally with left or right side down. Do not install this furnace on its back. For *vertically* installed *upflow* furnaces, return air ductwork may be attached to the side panel(s) and/or basepan. For *horizontally* installed *upflow* furnaces, return air ductwork must be attached to the basepan. For *counterflow* furnaces, return ductwork must be attached to the blower compartment end of the furnace.

NOTE: Ductwork must never be attached to the back of the furnace.

Horizontal Installation

Line contact to framing is permitted when installed in the horizontal configuration. Line contact is defined as the portion of the cabinet that is formed by the intersection of the top and side. ACCESSIBILITY CLEARANCE, WHERE GREATER, SHOULD TAKE PRECEDENCE OVER MINIMUM FIRE

PROTECTION CLEARANCE. A gas-fired furnace for installation in a residential garage must be installed so that the ignition source and burners are located not less than eighteen inches (18”) above the floor and is protected or located to prevent physical damage by vehicles. A gas furnace must not be installed directly on carpeting, tile, or other combustible materials other than wood flooring.

Furnace Suspension

If suspending the furnace from rafters or joist, use 3/8” threaded rod and 2”x2”x3/8” angle iron as shown below. The length of rod will depend on the application and the clearances necessary.

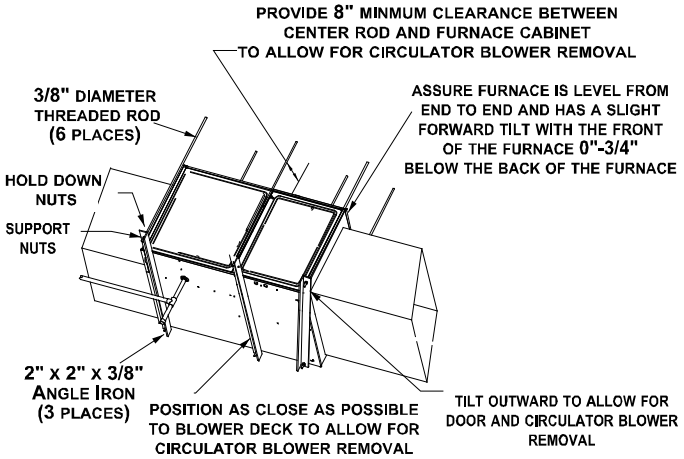

Suspended Furnace
Figure 2

Existing Furnace Removal

WARNING

CARBON MONOXIDE POISONING HAZARD

Failure to follow the steps outlined below for each appliance connected to the venting system being placed into operation could result in carbon monoxide poisoning or death.

The following steps shall be followed for each appliance connected to the venting system being placed into operation, while all other appliances connected to the venting system are not in operation:

1) Seal any unused openings in the venting system.
2) Inspect the venting system for proper size and horizontal pitch, as required in the National Fuel Gas Code, ANSI Z223.1/NFPA 54 or the Natural Gas and Propane Installation Code, CSA B149.1 and these instructions. Determine that there is no blockage or restriction, leakage, corrosion and other deficiencies which could cause an unsafe condition.
3) As far as practical, close all building doors and windows and all doors between the space in which the appliance(s) connected to the venting system are located and other spaces of the building.
4) Close fireplace dampers.
5) Turn on clothes dryers and any appliance not connected to the venting system. Turn on any exhaust fans, such as range hoods and bathroom exhausts, so they are operating at maximum speed. Do not operate a summer exhaust fan.
6) Follow the lighting instructions. Place the appliance being inspected into operation. Adjust the thermostat so appliance is operating continuously.
7) Test for spillage from draft hood equipped appliances at the draft hood relief opening after 5 minutes of main burner operation. Use the flame of a match or candle.
8) If improper venting is observed during any of the above tests, the venting system must be corrected in accordance with the National Fuel Gas Code, ANSI Z223.1/NFPA 54 and/or Natural Gas and Propane Installation Code, CSA B149.1.
9) After it has been determined that each appliance connected to the venting system properly vents when tested as outlined above, return doors, windows, exhaust fans, fireplace dampers and any other gas-fired burning appliance to their previous conditions of use.

AVERTISSEMENT

RISQUE D'INTOXICATION AU MONOXYDE DE CARBONE
Si les étapes décrites ci-dessous ne sont pas suivies pour chacun des appareils raccordés au système de ventilation au moment de sa mise en marche, cela peut entraîner une intoxication au monoxyde de carbone ou la mort. Les étapes suivantes doivent être suivies pour chacun des appareils raccordés au système de ventilation au moment de sa mise en marche, alors que tous les autres appareils raccordés au système de ventilation ne sont pas en marche:

1) Sceller toutes les ouvertures inutilisées du système de ventilation.
2) Inspecter le système de ventilation afin de vérifier si la taille et l'inclinaison par rapport à l'horizontale sont conformes aux exigences du National Fuel Gas Code, ANSI Z223.1/NFPA 54 ou du Code d'installation du gaz naturel et du propane, CSA B149.1 et à ces instructions. Vérifier qu'il n'y a pas d'obstruction ou de restriction, de fuite, de corrosion et d'autres problèmes qui pourraient entraîner une situation dangereuse.
3) Si possible, fermer toutes les portes et fenêtres du bâtiment ainsi que toutes les portes séparant l'endroit où se trouvent les appareils raccordés au système de ventilation et les autres zones du bâtiment.
4) Fermer le registre des foyers.
5) Mettre les sécheuses en marche ainsi que tous les autres appareils qui ne sont pas raccordés au système de ventilation. Mettre en marche tous les ventilateurs de tirage, comme celui des hottes de cuisine et des salles de bains, et les régler à la puissance maximale. Ne pas mettre en marche les ventilateurs d'été.
6) Suivre les instructions d'allumage. Mettre en marche l'appareil soumis à l'inspection. Régler le thermostat de manière à ce que l'appareil fonctionne en continu.
7) Vérifier la présence de fuite au niveau de l'ouverture du coupe-tirage des appareils qui en sont dotés après 5 minutes de fonctionnement du brûleur principal. Utiliser la flamme d'une allumette ou d'une bougie.
8) Si un problème de ventilation est observé pendant l'un des essais décrits ci-dessus, des correctifs doivent être apportés au système de ventilation conformément au National Fuel Gas Code, ANSI Z223.1/NFPA 54 et (ou) au Code d'installation du gaz naturel et du propane, CSA B149.1.
9) Une fois qu'il a été déterminé que chaque appareil raccordé au système de ventilation fonctionne correctement au moyen des essais décrits ci-dessus, les portes, les fenêtres, les ventilateurs, les registres de foyer et tous les autres appareils de combustion alimentés au gaz doivent être remis dans leur état initial.

Corrections must be in accordance with the latest edition of the National Fuel Gas Code NFPA 54/ANSI Z223.1 and/or CAN/CSA B149 Installation Codes.

If resizing is required on any portion of the venting system, use the appropriate table in the latest edition of the National Fuel Gas Code ANSI Z223.1.

Thermostat Location

In an area having good air circulation, locate the thermostat about five feet high on a vibration-free inside wall. Do not install the thermostat where it may be influenced by any of the following:

- Drafts, or dead spots behind doors, in corners, or under cabinets.
- Hot or cold air from registers.
- Radiant heat from the sun.
- Light fixtures or other appliances.
- Radiant heat from a fireplace.
- Concealed hot or cold water pipes, or chimneys.
- Unconditioned areas behind the thermostat, such as an outside wall.

Consult the instructions packaged with the thermostat for mounting instructions and further precautions.

Combustion and Ventilation Air Requirements

WARNING

To avoid property damage, personal injury or death, sufficient fresh air for proper combustion and ventilation of flue gas must be supplied. Most homes require outside air be supplied into the furnace area.

Improved construction and additional insulation in buildings have reduced heat loss by reducing air infiltration and escape around doors and windows. These changes have helped in reducing heating/cooling costs but have created a problem supplying combustion and ventilation air for gas fired and other fuel burning appliances. Appliances that pull air out of the house (clothes dryers, exhaust fans, fireplaces, etc.) increase the problem by starving appliances for air.

House depressurization can cause back drafting or improper combustion of gas-fired appliances, thereby exposing building occupants to gas combustion products that could include carbon monoxide.

If this furnace is to be installed in the same space with other gas appliances, such as a water heater, ensure there is an adequate supply of combustion and ventilation air for all appliances. Refer to the latest edition of the National Fuel Gas Code NFPA 54/ANSI Z223.1 or CAN/CSA B149 Installation Codes or applicable provisions of the local building codes for determining the combustion air requirements for the appliances.

This furnace must use indoor air for combustion. It cannot be installed as a direct vent (i.e., sealed combustion) furnace.

Most homes will require outside air be supplied to the furnace area by means of ventilation grilles or ducts connecting directly to the outdoors or spaces open to the outdoors such as attics or crawl spaces.

Category I Venting (Vertical Venting)

WARNING

To prevent possible personal injury or death due to asphyxiation, this furnace must be Category I vented. Do not vent using Category III venting.

Category I Venting is venting at a non-positive pressure. A furnace vented as Category I is considered a fan-assisted appliance and the vent system does not have to be "gas tight". **NOTE:** Gas furnaces with induced draft blowers draw products of combustion through a heat exchanger allowing, in some instances, common venting with natural draft appliances (i.e. water heaters). All installations must be vented in accordance with National Fuel Gas Code NFPA 54/ANSI Z223.1 - latest edition.

NOTE: The vertical height of the Category I venting system must be at least as great as the horizontal length of the venting system.

WARNING

To prevent possible personal injury or death due to asphyxiation, common venting with other manufacturer's induced draft appliances is not allowed.

The minimum vent diameter for the Category I venting system is as shown:

MODEL	MINIMUM VENT	
	UPFLOW	COUNTERFLOW
060	4 inch	4 inch
080	4 inch	4 inch
100	5 inch	4 inch

Under some conditions, larger vents than those shown above may be required or allowed. *When an existing furnace is removed from a venting system serving other appliances*, the venting system may be too large to properly vent the remaining attached appliances.

Furnaces are shipped with the induced draft blower discharging from the top of the furnace. ("Top" is as viewed for an upflow installation.) The induced draft blower on DM80TN models can be rotated 90 degrees for Category I venting. For furnaces installed vertically or horizontally, a four-inch single wall pipe can be used to extend the induced draft blower outlet ½" beyond the furnace cabinet. On DM80TN furnaces installed upflow or horizontally with left side down, the draft inducer may be rotated to discharge from the right side of the cabinet. When rotating the inducer a chimney transition bottom kit (part # 4053501S) is needed for proper alignment of the inducer outlet and the vent exit hole in the side of the cabinet. The inducer may NOT be rotated on DC80TN model furnaces regardless of installation position.

THIS PRODUCT IS NOT DESIGNED FOR COUNTER-CLOCKWISE INDUCED DRAFT BLOWER ROTATION.

Vent the furnace in accordance with the National Fuel Gas Code NFPA 54/ANSI Z223.1 - latest edition.

Venting

THIS FURNACE IS NOT DESIGN CERTIFIED TO BE HORIZONTALLY VENTED.

To rotate the induced draft blower clockwise, you will need to purchase one (4053501S) chimney transition bottom kit.

1. Disconnect electrical power from the furnace.
2. Disconnect the induced draft blower power leads, flue pipe, and pressure switch tubing.
3. Remove the round cutout from the right side of the wrapper.
4. Remove and save the four screws that fasten the induced draft blower to the flue collector box.
5. Remove and save the three screws that hold the chimney assembly to the induced draft blower.
6. Remove and save the four screws that fasten the chimney top to the chimney bottom.
7. Remove the chimney transition bottom from the transition bottom kit.
8. Install the chimney top with the four screws retained from step 6 onto the new chimney transition bottom from the transition bottom kit.
9. Install chimney assembly with the three screws retained from step 5 onto the induced draft blower.
10. Reinstall the induced draft blower rotating it 90 degrees clockwise from the original upflow configuration using the four screws retained in step 3. Ensure the gasket located between the induced draft blower and the collector box is rotated accordingly.
11. Reconnect the induced draft blower power leads. **NOTE**: If the wires are not long enough, pull extra wire from the wire bundle in the blower compartment.
12. Reconnect the flue pipe, and the pressure switch tubing. Ensure that all wires and the pressure switch tubing is at least one inch from the flue pipe, or any other hot surface.
13. Restore power to furnace.

Counterflow units are shipped with the induced draft blower discharging from the top of the furnace. ("Top" as viewed for a counterflow installation.)

Vent the furnace in accordance with the National Fuel Gas Code NFPA54/ANSI Z223.1 - latest edition.

WARNING

Never allow the products of combustion, including carbon monoxide, to enter the return ductwork or circulation air supply.

Masonry Chimneys

WARNING

Possibility of property damage, personal injury or death damaging condensation can occur inside masonry chimneys when a single fan-assisted Category I appliance (80% AFUE furnace) is vented without adequate dilution air. Do not connect an 80% furnace to a masonry chimney unless the furnace is common vented with a draft hood equipped appliance or the chimney is lined with a metal liner or Type B metal vent. All installations using masonry chimneys must be sized in accordance with appropriate venting tables. If an 80% furnaces common vented with a draft hood equipped appliance, the potential for condensation damage may still exist with extremely cold conditions, long vent connectors, exterior chimneys, or any combination of these conditions. The risk of condensation damages is best avoided by using masonry chimney as a pathway for properly sized metal liner or Type B metal vent.

Masonry Chimney Terminations

A masonry chimney used as a vent for gas fired equipment must extend at least three feet above the highest point where it passes through the roof. It must extend at least two feet higher than any portion of a building within a horizontal distance of 10 feet. In addition, the chimney must terminate at least three feet above any forced air inlet located within 10 feet. The chimney must extend at least five above the highest connected equipment draft hood outlet or flue collar.

Electrical Connections

WARNING

HIGH VOLTAGE!
To avoid the risk of electrical shock, wiring to the unit must be polarized and grounded.

CAUTION

Label all wires prior to disconnection when servicing controls. Wiring errors can cause improper and dangerous operation. Verify proper operation after servicing.

WARNING

HIGH VOLTAGE!
To avoid risk of injury, electrical shock or death, the furnace must be electrically grounded in accordance with local codes or in their absence, with the latest edition of the National Electric Code.

WARNING

Edges of sheet metal holes may be sharp. Use gloves as a precaution when removing hole plugs.

Wiring Harness

The wiring harness is an integral part of this furnace. Field alteration to comply with electrical codes should not be required. Wires are color coded for identification purposes. Refer to the wiring diagram for wire routings. If any of the original wire as supplied with the furnace must be replaced, it must be replaced with wiring material having a temperature rating of at least 105° C. Any replacement wiring must be a copper conductor.

115 Volt Line Connections

Before proceeding with electrical connections, ensure that the supply voltage, frequency, and phase correspond to that specified on the unit rating plate. Power supply to the furnace must be NEC Class 1, and must comply with all applicable codes. The furnace must be electrically grounded in accordance with local codes or, in their absence, with the latest edition of The National Electric Code, ANSI NFPA 70 and/or The Canadian Electric Code CSA C22.1.

Use a separate fused branch electrical circuit containing properly sized wire, and fuse or circuit breaker. The fuse or circuit breaker must be sized in accordance with the maximum overcurrent protection specified on the unit rating plate. An electrical disconnect must be provided at the furnace location.

Connect hot, neutral, and ground wires as shown in the wiring diagram located on the unit's blower door. Metal conduit is not considered a substitute for an actual ground wire to the unit.

Line polarity must be observed when making field connections. Line voltage connections can be made through either the right or left side panel. The furnace is shipped configured for a right side electrical connection with the junction box located inside the burner compartment (blower compartment for downflows). To make electrical connections through the opposite side of the furnace, the junction box must be relocated to the other side of the burner (or blower) compartment prior to making electrical connections. To relocate the junction box, follow the steps shown below.

NOTE: Wire routing must not to interfere with circulator blower operation, filter removal, or routine maintenance.

Junction Box Relocation

WARNING

Edges of sheet metal holes may be sharp. Use gloves as a precaution when removing hole plugs.

WARNING

To prevent personal injury or death due to electric shock, disconnect electrical power before installing or servicing this unit.

1. Remove both doors from the furnace.
2. Remove and save the screws holding the junction box to the right side of the furnace.
3. Attach the junction box to the left side of the furnace, using the screws removed in step 2.
4. Check the location of the wiring. Confirm that it will not be damaged by heat from the burners or by the rotation of the fan. Also confirm that wiring location will not interfere with filter removal or other maintenance.

IMPORTANT NOTE: To avoid possible equipment malfunction, route the low voltage wires to avoid interference with filter removal or other maintenance.

WARNING

HIGH VOLTAGE!
To avoid risk of injury, electrical shock or death, the furnace must be electrically grounded in accordance with local codes or in their absence, with the latest edition of the National Electric Code.

To ensure proper unit grounding, the ground wire should run from the furnace ground screw located inside the furnace junction box all the way back to the electrical panel. **NOTE:** Do not use gas piping as an electrical ground. To confirm proper unit grounding, turn off the electrical power and perform the following check.

1. Measure resistance between the neutral (white) connection and one of the burners.
2. Resistance should measure 10 ohms or less.

This furnace is equipped with a blower door interlock switch which interrupts unit voltage when the blower door is opened for servicing. Do not defeat this switch.

Gas Supply and Piping

The furnace rating plate includes the approved furnace gas input rating and gas types. The furnace must be equipped to operate on the type of gas applied. This includes any conversion kits required for alternate fuels and/or high altitude.

CAUTION

To prevent unreliable operation or equipment damage, the inlet gas supply pressure must be as specified on the unit rating plate with all other household gas fired appliances operating.

Inlet gas supply pressures must be maintained within the ranges specified in the following table. The supply pressure must be constant and available with all other household gas fired appliances operating. The minimum gas supply pressure must be maintained to prevent unreliable ignition. The maximum must not be exceeded to prevent unit overfiring.

NOTE: Do not remove the gas valve inlet plug before the gas line is installed. Replace if water or debris has been introduced.

INLET GAS SUPPLY PRESSURE		
Natural Gas	Minimum: 4.5" w.c.	Maximum: 10.0" w.c.
Propane Gas	Minimum: 11.0" w.c.	Maximum: 13.0" w.c.

NOTE: Adjusting the minimum supply pressure below the limits in the above table could lead to unreliable ignition. Gas input to the burners must not exceed the rated input shown on the rating plate. Overfiring of the furnace can result in premature heat exchanger failure. Gas pressures in excess of 13 inches water column can also cause permanent damage to the gas valve.

At all altitudes, the manifold pressure must be within 0.3 inches w.c. of that listed in the Specification Sheet applicable to your model for the fuel used. At all altitudes and with either fuel, the air temperature rise must be within the range listed on the furnace nameplate. Should this appliance be converted to LP, refer to the instructions included in the factory authorized LP conversion kit.

High Altitude Derate

High altitude installations may require both a pressure switch and an orifice change. These changes are necessary to compensate for the natural reduction in the density of both the gas fuel and the combustion air at higher altitude.

Clearance in accordance with local installation codes, the requirements of the gas supplier and the manufacturer's installation instructions.

Dégaugement conforme aux dodes d'installation locaux, aux exigences du fournisseur de gaz et aux instructions d'installation du fabricant.

Gas	Altitude	Kit	Orifice	Manifold Pressure	Pressure Switch Change
Natural	0-5500	None	#45	3.5" w.c.	None
Propane		LPM-06	#55	10.0"w.c.	None

Note: In Canada, gas furnaces are only certified to 4500 feet.

Consult the furnace Specification Sheet for appropriate manufacturer's kits for propane gas and/or high altitude installations. The indicated kits must be used to insure safe and proper furnace operation. All conversions must be performed by a qualified installer, or service agency.

Propane Gas Conversion

WARNING

Possible property damage, personal injury or death may occur if the correct conversion kits are not installed. The appropriate kits must be applied to ensure safe and proper furnace operation. All conversions must be performed by a qualified installer or service agency.

This unit is configured for natural gas. The appropriate manufacturer's propane gas conversion kit must be applied for propane gas installations.

If converting to LP gas, it is recommended that an LPLP0* kit also be installed. The use of this kit will prevent the furnace from firing when the LP gas supply pressure is too low to support proper combustion.

Gas Piping Connections

When sizing gas lines, be sure to include all appliances which will operate simultaneously.

The gas piping supplying the furnace must be properly sized based on the gas flow required, specific gravity of the gas, and length of the run. The gas line installation must comply with local codes, or in their absence, with the latest edition of the National Fuel Gas Code, NFPA 54/ANSI Z223.1.

Natural Gas Capacity of Pipe
In Cubic Feet of Gas Per Hour (CFH)

Length of Pipe in Feet	Nominal Black Pipe Size				
	1/2"	3/4"	1"	1 1/4"	1 1/2"
10	132	278	520	1050	1600
20	92	190	350	730	1100
30	73	152	285	590	980
40	63	130	245	500	760
50	56	115	215	440	670
60	50	105	195	400	610
70	46	96	180	370	560
80	43	90	170	350	530
90	40	84	160	320	490
100	38	79	150	305	460

(Pressure 0.5 psig or less and pressure drop of 0.3" W.C.; Based on 0.60 Specific Gravity Gas)

$$\text{CFH} = \frac{\text{BTUH Furnace Input}}{\text{Heating Value of Gas (BTU/Cubic Foot)}}$$

To connect the furnace to the building's gas piping, the installer must supply a ground joint union, drip leg, manual shutoff valve, and line and fittings to connect to gas valve. In some cases, the installer may also need to supply a transition piece from ½" pipe to a larger pipe size.

The following stipulations apply when connecting gas piping.

- Gas piping must be supported external to the furnace cabinet so that the weight of the gas line does not distort the burner rack, manifold or gas valve.
- Use black iron or steel pipe and fittings for the building piping.
- Use pipe joint compound on male threads only. Pipe joint compound must be resistant to the action of the fuel used.
- Use ground joint unions.
- Install a drip leg to trap dirt and moisture before it can enter the gas valve. The drip leg must be a minimum of three inches long.
- Use two pipe wrenches when making connection to the gas valve to keep it from turning. The orientation of the gas valve on the manifold must be maintained as shipped from the factory.
- Install a manual shutoff valve between the gas meter and unit within six feet of the unit. If a union is installed, the union must be downstream of the manual shutoff valve, between the shutoff valve and the furnace.
- Tighten all joints securely.
- Connect the furnace to the building piping by one of the following methods:
  – Rigid metallic pipe and fittings.
  – Semi-rigid metallic tubing and metallic fittings. Aluminum alloy tubing must not be used in exterior locations.
  – Use listed gas appliance connectors in accordance with their instructions. Connectors must be fully in the same room as the furnace.
  – Protect connectors and semi-rigid tubing against physical and thermal damage when installed. Ensure aluminum-alloy tubing and connectors are coated to protect against external corrosion when in contact with masonry, plaster, or insulation, or subjected to repeated wetting by liquids such as water (except rain water), detergents, or sewage.

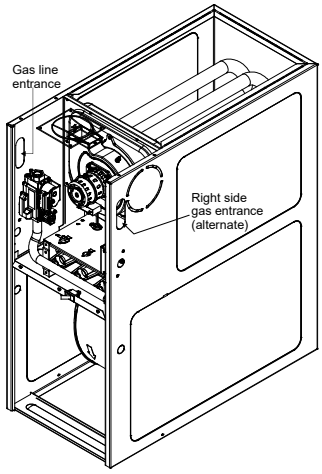

General Furnace Layout
Figure 3

Upflow Installations

When the gas piping enters through the side of the furnace, the installer must supply the following fittings (starting from the gas valve):

- Close nipple.
- 90 degree elbow.
- Straight pipe to reach the exterior of the furnace.

A ground joint union, drip leg, and manual shutoff valve must also be supplied by the installer. In some cases, the installer may also need to supply a transition piece from ½" to another pipe size.

When the gas piping enters through the left side of the furnace, the installer must supply the following fittings (starting from the gas valve):

- 90 degree elbow.
- Straight pipe to reach the exterior of the furnace.
- A ground joint union, drip leg, and manual shutoff valve must also be supplied by the installer. In some cases, the installer may also need to supply a transition piece from ½ inch to another pipe size.

Counterflow Installations

When the gas piping enters through the left side of the furnace, the installer must supply a straight pipe and a 90 degree elbow to reach the exterior of the furnace.

A ground joint union, drip leg and manual shutoff valve must also be supplied by the installer. In most cases, the installer may also need to supply a transition piece from ½" to another pipe size. When the gas piping enters through the right side of the furnace, the installer must supply the following fittings (starting at the gas valve):

- Close Nipple
- 90 Degree Elbow
- Straight Pipe to Reach Exterior of Furnace.

Gas Piping Checks

Before placing unit in operation, leak test the unit and gas connections.

WARNING

To avoid the possibility of explosion or fire, never use a match or open flame to test leaks.

Check for leaks using an approved chloride-free soap and water solution, an electronic combustible gas detector, or other approved testing methods.

WARNING

To prevent property damage or personal injury due to fire, the following instructions must be performed regarding gas connections, pressure testing, location of shutoff valve and installation of gas piping.

NOTE: Never exceed specified pressures for testing. Higher pressure may cause gas valve failure.

Disconnect this unit and shutoff valve from the gas supply piping system before pressure testing the supply piping system with pressures in excess of ½ psig (3.48 kPa).

This unit must be isolated from the gas supply system by closing its manual shutoff valve before pressure testing of gas supply piping system with test pressures equal to or less than ½ psig (3.48 kPa).

Propane Gas Tanks and Piping

A gas detecting warning system is the only reliable way to detect a propane gas leak. Rust can reduce the level of odorant in propane gas. Do not rely on your sense of smell. Contact a local propane gas supplier about installing a gas detecting warning system. If the presence of gas is suspected, follow the instructions on Page 3 of this manual.

All propane gas equipment must conform to the safety standards of the National Board of Fire Underwriters, NBFU Manual 58.

For satisfactory operation, propane gas pressure must be 10 inch WC at the furnace manifold with all gas appliances in operation. Maintaining proper gas pressure depends on three main factors:

1. Vaporization rate, depending on temperature of the liquid, and "wetted surface" area of the container or containers.
2. Proper pressure regulation (Two-stage regulation is recommended for both cost and efficiency).
3. Pressure drop in lines between regulators, and between second stage regulator and the appliance. Pipe size will depend on length of pipe run and total load of all appliances.

Complete information regarding tank sizing for vaporization, recommended regulator settings, and pipe sizing is available from most regulator manufacturers and propane gas suppliers.

Use a pipe thread compound that is approved for natural gas and LP Gas.

Refer to the following illustration for typical propane gas installations and piping.

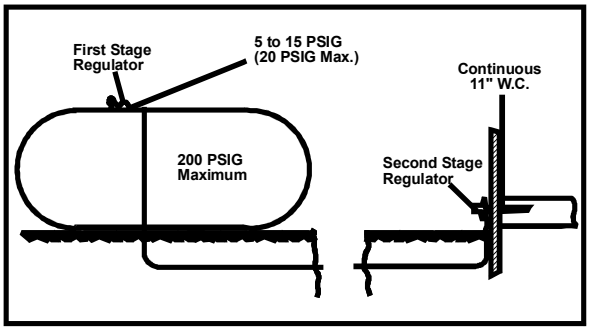

Propane Gas Installation (Typ.)
Figure 4

Propane Gas Piping Charts

Sizing Between First and Second Stage Regulator*
Maximum Propane Capacities listed are based on 2 psig pressure drop at 10 psig setting.
Capacities in 1,000 BTU/hour.

Pipe or Tubing Length, Feet	Tubing Size, O.D. Type L					Nominal Pipe Size Schedule 40	
	3/8"	1/2"	5/8"	3/4"	7/8"	1/2"	3/4"
10	730	1,700	3,200	5,300	8,300	3,200	7,500
20	500	1,100	2,200	3,700	5,800	2,200	4,200
30	400	920	2,000	2,900	4,700	1,800	4,000
40	370	850	1,700	2,700	4,100	1,600	3,700
50	330	770	1,500	2,400	3,700	1,500	3,400
60	300	700	1,300	2,200	3,300	1,300	3,100
80	260	610	1,200	1,900	2,900	1,200	2,600
100	220	540	1,000	1,700	2,600	1,000	2,300
125	200	490	900	1,400	2,300	900	2,100
150	190	430	830	1,300	2,100	830	1,900
175	170	400	780	1,200	1,900	770	1,700
200	160	380	730	1,100	1,800	720	1,500

Sizing Between Second Stage and Appliance Regulator*
Maximum Propane Capacities listed are based on 2 psig pressure drop at 10 psig setting.
Capacities in 1,000 BTU/hour.

Pipe or Tubing Length, Feet	Tubing Size, O.D. Type L						Nominal Pipe Size Schedule 40				
	3/8"	1/2"	5/8"	3/4"	7/8"	1-1/8"	1/2"	3/4"	1"	1-1/4"	1-1/2"
10	39	92	199	329	501	935	275	567	1,071	2,205	3,307
20	26	62	131	216	346	630	189	393	732	1,496	2,299
30	21	50	107	181	277	500	152	315	590	1,212	1,858
40	19	41	90	145	233	427	129	267	504	1,039	1,559
50	18	37	79	131	198	376	114	237	448	910	1,417
60	16	35	72	121	187	340	103	217	409	834	1,275
80	13	29	62	104	155	289	89	185	346	724	1,066
100	11	26	55	90	138	255	78	162	307	630	976
125	10	24	48	81	122	224	69	146	275	567	866
150	9	21	43	72	109	202	63	132	252	511	787
200	8	19	39	66	100	187	54	112	209	439	665
250	8	17	36	60	93	172	48	100	185	390	590

Circulating Air

WARNING

Never allow the products of combustion, including carbon monoxide, to enter the return duct work or circulation air supply.

Duct systems and register sizes must be properly designed for the CFM and external static pressure rating of the furnace. Ductwork should be designed in accordance with the recommended methods of “Air Conditioning Contractors of America” Manual D.

A duct system must be installed in accordance with Standards of the National Board of Fire Underwriters for the Installation of Air Conditioning, Warm Air Heating and Ventilating Systems. Pamphlets No. 90A and 90B.

A closed return duct system must be used, with the return duct connected to the furnace. **NOTE:** Ductwork must never be attached to the back of the furnace. For installations requiring more than 1800 CFM, use a bottom return or two sided return. Supply and return connections to the furnace may be made with flexible joints to reduce noise transmission. To prevent the blower from interfering with combustion air or draft when a central return is used, a connecting duct must be installed between the unit and the utility room wall. A room, closet, or alcove must not be used as a return air chamber.

When the furnace is used in connection with a cooling unit, the furnace should be installed in parallel with or on the upstream side of the cooling unit to avoid condensation in the heating element. With a parallel flow arrangement, the dampers or other means used to control the flow of air must be adequate to prevent chilled air from entering the furnace and, if manually operated, must be equipped with means to prevent operation of either unit unless the damper is in the full heat or cool position.

When the furnace is installed without a cooling coil, it is recommended that a removable access panel be provided in the outlet air duct. This opening shall be accessible when the furnace is installed and shall be of such a size that the heat exchanger can be viewed for visual light inspection or such that a sampling probe can be inserted into the air stream. The access panel must be made to prevent air leaks when the furnace is in operation.

When furnace duct(s) supply air outside the space containing the furnace, a return air duct must terminate in the same space as the supply duct and be sealed to the furnace casing.

When the furnace is heating, the temperature of the return air entering the furnace must be between 55°F and 100°F.

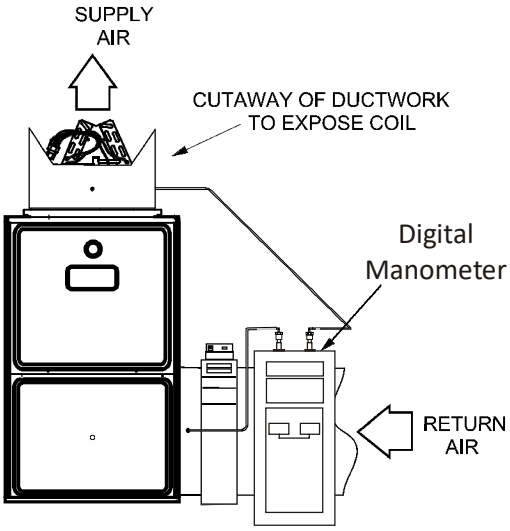

Checking Static Pressure
Figure 5

Filters - Read This Section Before Installing The Return Air Ductwork

Filters must be used with this furnace. Discuss filter maintenance with the building owner. Filters do not ship with this furnace, but must be provided by the installer. Filters must comply with UL900 or CAN/ULCS111 standards. Damage or repairs due to the installation of the furnace without filters is not covered under the warranty.

Upright Installations

Depending on the installation and/or customer preference, differing filter arrangements can be applied. Filters can be installed in the central return register or a side panel external filter rack kit (upflows), or the ductwork above a downflow furnace. As an alternative, a media air filter or electronic air cleaner can be used as the primary filter.

Horizontal Installations

Filters must be installed in either the central return register or in the return air duct work.

Circulation Air Filters

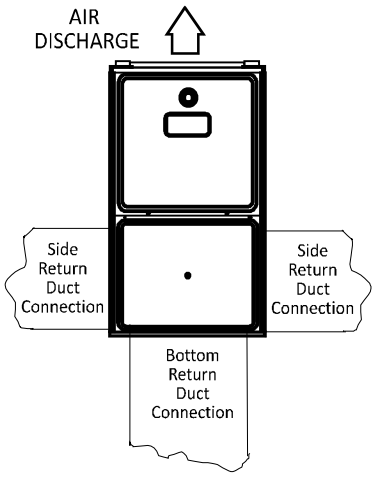

UPFLOW UPRIGHT

Figure 6

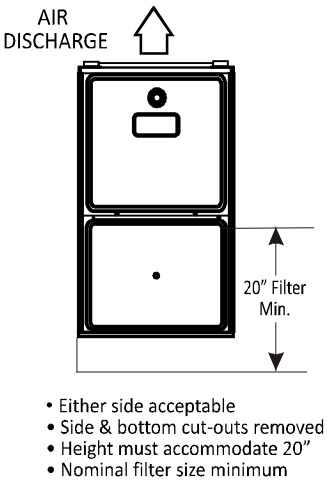

SIDE/BOTTOM
RETURN DUCT OPTION

Figure 7

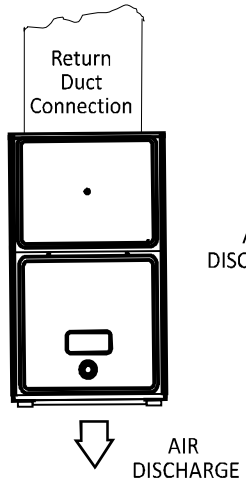

COUNTERFLOW

Figure 8

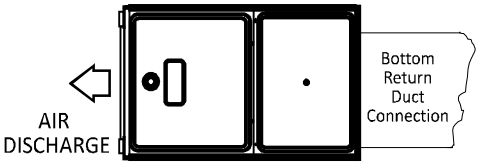

UPFLOW HORIZONTAL
LEFT AIR DISCHARGE

Figure 9

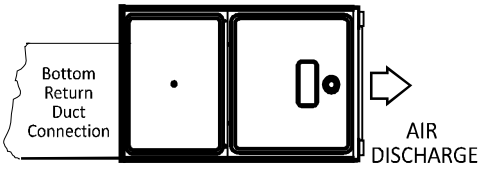

UPFLOW HORIZONTAL
RIGHT AIR DISCHARGE

Figure 10

One of the most common causes of a problem in a forced air heating system is a blocked or dirty filter. Circulating air filters must be inspected monthly for dirt accumulation and replaced if necessary. Failure to maintain clean filters can cause premature heat exchanger failure.

A new home may require more frequent replacement until all construction dust and dirt is removed.

Upflow Models	Minimum Recommended Filter Size
0403A	1 - 16 X 25 Side or 1 - 14 X 24 Bottom Return
0603A	1 - 16 X 25 Side or 14 X 24 Bottom Return
0603B	1 - 16 X 25 Side or Bottom Return
0803B	1 - 16 X 25 Side or Bottom Return
0804B	1 - 16 X 25 Side or Bottom Return
0804C	1 - 16 X 25 Side or Bottom Return
0805C	1 - 16 X 25 Side or Bottom Return[1]
0805D	2 - 16 X 25 Side or 1 - 20 X 25 Bottom Return[1]
1004C	2 - 16 X 25 Side or 1 - 20 X 25 Bottom Return
1005C	2 - 16 X 25 Side or 1 - 20 X 25 Bottom Return
1205D	2 - 16 X 25 Side or 1 - 24 X 24 Bottom Return
Downflow Models	
0403A	2 - 10 X 20 or 1 - 14 X 25 Top Return
0603A	2 - 10 X 20 or 1 - 14 X 25 Top Return
0804B	2 - 14 X 20 or 1 - 16 X 25 Top Return
1005C	2 - 14 X 20 or 1 - 20 X 25 Top Return

Larger filters may be used, filters may also be centrally located

[1] = Use 2 - 16 X 25 filters and two side returns or 20 X 25 filter on bottom return if furnace is connected to a cooling unit over 4 tons nominal capacity
A combination of one side & bottom may be used instead of both sides

Electrical

24 Volt Thermostat Wiring

Important Note: Wiring routing must not interfere with circulator blower operation, filter removal or routine maintenance. Low voltage connections can be made through either the right or left side panel. Thermostat wiring entrance holes are located in the blower compartment. The following figure shows connections for a "heat/cool system".

This furnace is equipped with a 40 VA transformer to facilitate use with most cooling equipment. Consult the wiring diagram, located on the blower compartment door, for further details of 115 Volt and 24 Volt wiring.

Thermostat Wiring Diagrams

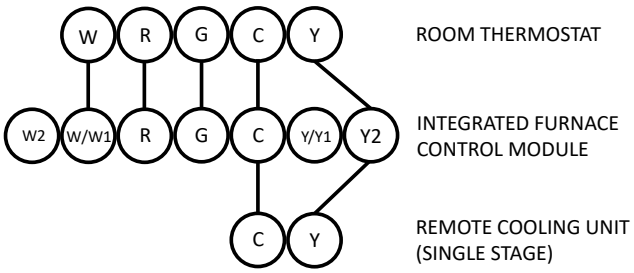

Thermostat - Single -Stage Heating with Single-Stage Cooling

NOTE: To apply a single-stage Heating Thermostat, the staging option *must* be set on single-stage.

Figure 11

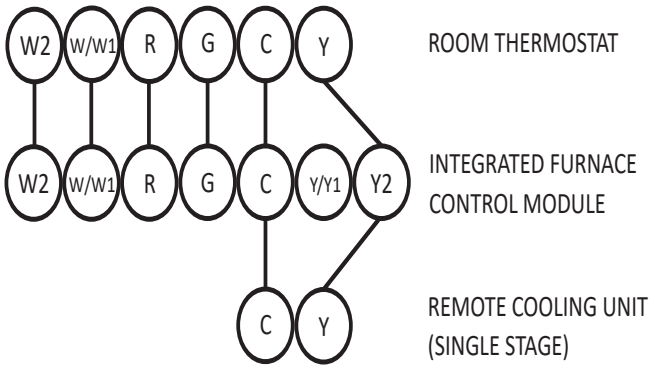

Thermostat - Two-Stage Heating with Single-Stage Cooling
Figure 12

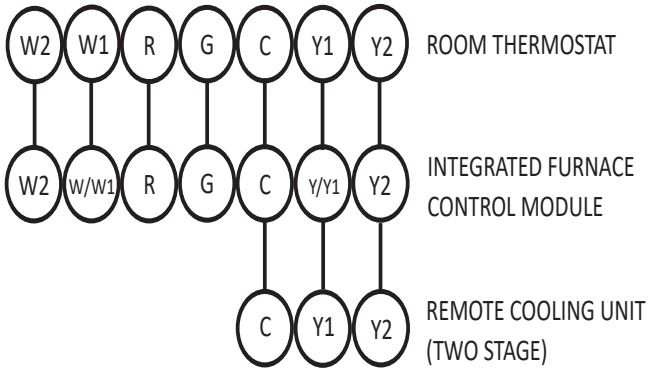

Thermostat - Two-Stage Heating with Two-Stage Cooling
Figure 13

Using a Single-Stage Heating Thermostat

A single-stage heating thermostat may be used to control this furnace; however, the furnace is setup by default to use a two-stage heating thermostat. To use a single stage heating thermostat the installer must make the desired selections in the user menus using the push button switches on the control board. When a single stage heating thermostat is used there are two options for controlling the timed transition from low to high fire: 1) Auto 2) Fixed Time.

- Press the Left or Right menu switches to get to the
- A H S menu.
- The menu will display these options: no10 20 30 60 AUt
- Fixed time options are expressed in minutes on the display as:10 20 30 60**.**
- If AUt (Automatic) is selected, the actual timing for the transition to 2nd stage heat will be calculated by the control board based on length of run time of previous heating cycles (duty cycle).
- Press the center switch to save the selection.

In Auto mode, the transition to 2nd stage heat will vary between 1 to 12 minutes.

Duty Cycle %	Heating Stage Timing	Demand
0-38	1st Stage, 12 minute 2nd Stage	Light
39-50	1st Stage, 10 minute 2nd Stage	Light to Average
51-62	1st Stage, 7 minute 2nd Stage	Average
63-75	1st Stage, 5 minute 2nd Stage	Average to Heavy
76-88	1st Stage, 3 minute 2nd Stage	Heavy
89-100	1st Stage, 1 minute 2nd Stage	Heavy

Using a Two Stage Heating Thermostat

- The furnace is setup by default to use a two-stage heating thermostat.
- The menu may be accessed by pressing the Left or Right menu switches to get to the A H S menu.
- The menu will display these options: no 10 20 30 60 AUt**.**
- Select no.
- Press the center switch to save the selection.
- In this mode only a W2 signal on the control board will bring on 2nd stage heat.

Fossil Fuel Applications

This furnace can be used in conjunction with a heat pump in a fossil fuel application. A fossil fuel application refers to a combined gas furnace and heat pump installation which uses an outdoor temperature sensor to determine the most cost efficient means of heating (heat pump or gas furnace).

A heat pump thermostat with *three stages of heat* is required to properly use a two-stage furnace in conjunction with a heat pump. Refer to the fossil fuel kit installation instructions for additional thermostat requirements.

Strictly follow the wiring guidelines in the fossil fuel kit installation instructions. All furnace connections must be made to the furnace two-stage integrated control module and the “FURNACE” terminal strip on the fossil fuel control board.

Twinning

Two furnaces of the same model may be twinned. The integrated control board has a 3/16” terminal labeled “TWIN” located beside the low voltage thermostat connection strip. Twinning allows simultaneous operation of two furnaces and forces the indoor blower motors of each furnace to operate synchronously into a common duct system. Using the twinning function will require only field installed wiring with no external kits or parts. The staging and speed tap options must be set the same on both furnaces.

NOTE: Each furnace must be connected to it’s own 115 VAC power supply. The L1 connection to each furnace must be in phase (connected to circuit breakers on the same 115 VAC service panel phase leg). To verify that the furnaces are in phase, check from L1 to L1 on each furnace with a voltmeter. If the furnaces are in phase, the voltage between both furnaces will be ZERO.

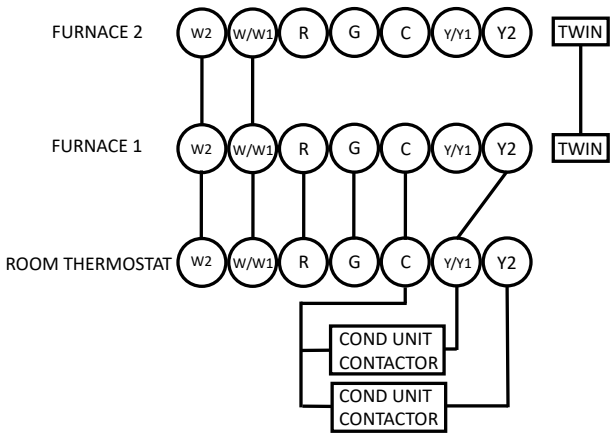

Figure 14

115 Volt Line Connection of Accessories (Humidifier and Electronic Air Cleaner)

The furnace integrated control module is equipped with line voltage accessory terminals for controlling power to an optional field-supplied humidifier and/or electronic air cleaner.

The accessory load specifications are noted in the chart below:

Humidifier	1.0 Amp maximum at 120 VAC
Electronic Air Cleaner	1.0 Amp maximum at 120 VAC

Turn OFF power to the furnace before installing any accessories. Follow the humidifier or air cleaner manufacturers' instructions for locating, mounting, grounding, and controlling these accessories. Accessory wiring connections are to be made through the 1/4" quick connect terminals provided on the furnace integrated control module. The humidifier and electronic air cleaner hot terminals are identified as HUM H and EAC H. The humidifier and electronic air cleaner neutral terminals are identified as NEUTRAL. All field wiring must conform to applicable codes. Connections should be made as shown.

If it is necessary for the installer to supply additional line voltage wiring to the inside of the furnace, the wiring must conform to all local codes, and have a minimum temperature rating of 105°C. All line voltage wire splices must be made inside the furnace junction box.

The integrated control module humidifier terminal (HUM H) is energized with 115 volts whenever the induced draft blower is energized. The integrated control module electronic air cleaner terminal (EAC H) is energized with 115 volts whenever the circulator blower is energized. This terminal can also be used to provide 115 volt power to a humidifier transformer. The remaining primary transformer wire would be connected to the Line N on the control board.

WARNING

HIGH VOLTAGE!

To avoid personal injury or death due to electrical shock, disconnect electrical power before servicing or changing any electrical wiring.

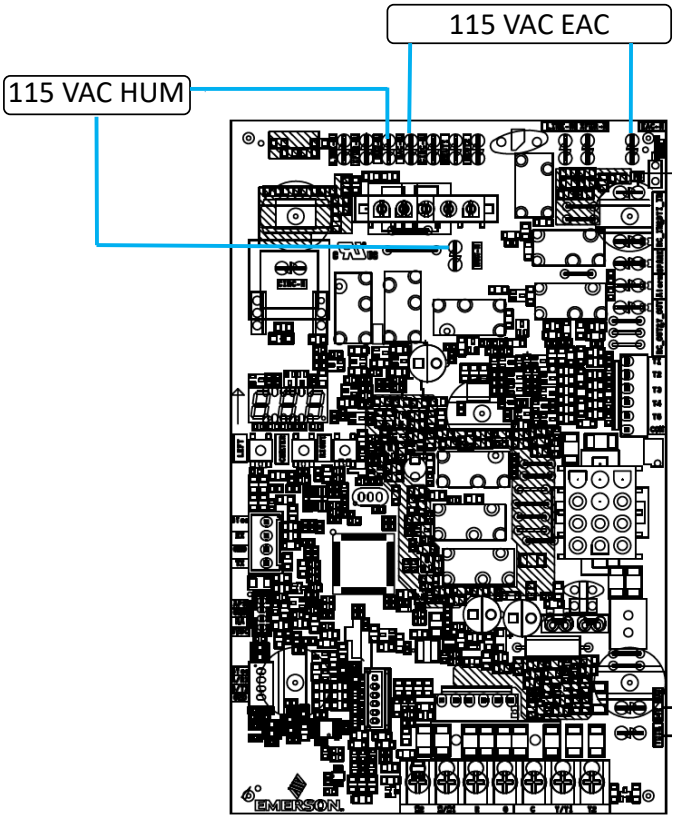

Accessories - Accessories Wiring
Figure 15

Low Voltage Humidifier

The furnace integrated control module is equipped with a low voltage terminal for providing power to an optional field-supplied 24 volt humidifier. The 24V HUM terminal is energized any time the draft inducer is powered. See connection diagram below.

NOTE: This is a 24 volt circuit only, the common connection must be on C terminal of the low voltage terminal strip (where thermostat wires are connected). Wiring for this circuit must NOT be connected to the line N location where line voltage neutral wires are connected.

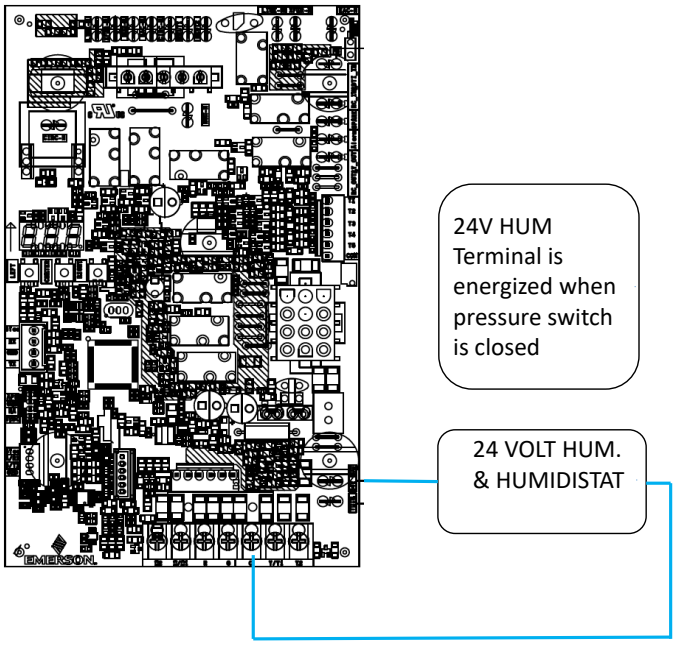

24 Volt Humidifier Connection
Figure 16

Circulating Air & Filters

Duct work - Air Flow

Duct systems and register sizes must be properly designed for the CFM and external static pressure rating of the furnace. Design the ductwork in accordance with the recommended methods of "Air Conditioning Contractors of America" Manual D.

Install the duct system in accordance with Standards of the National Board of Fire Underwriters for the Installation of Air Conditioning, Warm Air Heating and Ventilating Systems. Pamphlets No. 90A and 90B.

A closed return duct system must be used, with the return duct connected to the furnace. **NOTE:** Ductwork must never be attached to the back of the furnace. For upflow installations requiring 1800 CFM or more, use either two side returns or bottom return or a combination of side /bottom. Flexible joints may be used for supply and return connections to reduce noise transmission. To prevent the blower from interfering with combustion air or draft when a central return is used, a connecting duct must be installed between the unit and the utility room wall. Never use a room, closet, or alcove as a return air chamber.

Checking Duct Static

Refer to your furnace rating plate for the maximum ESP (external duct static) rating.

WARNING

Never allow the products of combustion, including carbon monoxide, to enter the return duct work or circulation air supply.

Total external static refers to everything external to the furnace cabinet. Cooling coils, filters, ducts, grilles, registers must all be considered when reading your total external static pressure. The supply duct pressure must be read between the furnace and the cooling coil.

This reading is usually taken by removing the "A" shaped block off plate from the end on the coil; drilling a test hole in it and reinstalling the block off plate. Take a duct static reading at the test hole. Tape up the test hole after your test is complete. The negative pressure must be read between the filter and the furnace blower.

Too much external static pressure will result in insufficient air that can cause excessive temperature rise. This can cause limit switch tripping and heat exchanger failure.

To determine total external duct static pressure, proceed as follows:

1. With clean filters in the furnace, use a manometer to measure the static pressure of the return duct at the inlet of the furnace. (Negative Pressure)
2. Measure the static pressure of the supply duct. (Positive Pressure)
3. The difference between the two numbers is .4" w.c.
   Example:
   static reading from return duct = -.1" w.c.
   static reading from supply duct = .3" w.c.
   total external static pressure on this system = .4" w.c.

NOTE: Both readings may be taken simultaneously and read directly on the manometer if so desired. If an air conditioner coil or Electronic Air Cleaner is used in conjunction with the furnace, the readings must also include theses components, as shown in the following drawing.

4. Consult proper tables for the quantity of air.

If the total external static pressure exceeds the maximum listed on the furnace rating plate, check for closed dampers, registers, undersized and/or oversized poorly laid out duct work.

The temperature rise of the furnace must be within the temperature rise range listed on the furnace rating plate.

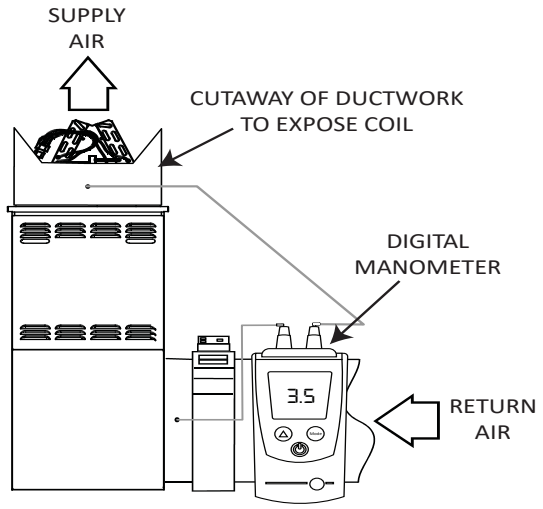

Checking Static Pressure
Figure 17

Furnace Startup

1. Close the manual gas shutoff valve external to the furnace.
2. Turn off the electrical power to the furnace.
3. Set the room thermostat to the lowest possible setting.
4. Remove the burner compartment door.

NOTE: This furnace is equipped with an ignition device which automatically lights the burner. Do not try to light the burner by hand.

5. Move the furnace gas valve manual control to the OFF position.
6. Wait five minutes then smell for gas. Be sure check near the floor as some types of gas are heavier than air.
7. If you smell gas after five minutes, immediately follow the safety instructions in the *Safety Considerations* on page 2 of this manual. If you do not smell gas after five minutes, move the furnace gas valve manual control to the ON position.
8. Replace the burner compartment door.
9. Open the manual gas shutoff valve external to the furnace.
10. Turn on the electrical power to the furnace.
11. Adjust the thermostat to a setting above room temperature.
12. After the burners are lit, set the thermostat to desired temperature.

Gas Heat Sequence of Operation

Call for 1st Stage Heat

- On a call for heat, the thermostat contacts close & the control board receives 24 VAC on the W1 terminal.
- The control board microcomputer runs its self-check routine.
- The control verifies the limit switch is closed (24 VAC on Pin 8 of the 12 Pin connector).
- The control verifies that pressure switch circuit is open (0 VAC on Pin 5).
- The control module performs a gas valve circuitry check to verify gas valve relay state and presence of voltage at the valve.
- The system will energize the Induced draft blower.
- The pre-purge period begins once the low fire pressure switch is detected closed (24 VAC on Pin 5).
- After the completion of pre-purge, the control will energize the igniter.
- After completion of the ignitor warm-up period:
- The gas valve is energized.
- The ignitor is de-energized as soon as flame is sensed.
- After 30 seconds the indoor blower is energized on heating speed.
- When using a single-stage heating thermostat, the furnace will transition to 2nd stage gas heat by either a fixed time or auto mode depending on menu selections made by the installer.
- The inducer motor is enabled at high speed.
- Closure of the 2nd stage pressure switch will energize the high fire stage of the gas valve.
- The 2nd stage gas heat speed of the indoor blower is energized
- When the thermostat is satisfied:
- The gas valve is de-energized.
- The inducer remains energized for the post purge period (15 seconds).
- The indoor blower runs for the selected off delay period (90 seconds by default, adjustable from 30 – 180 seconds).

Call for 2nd Stage Heat During 1st Stage Heat Operation

- The control board receives a 24 VAC signal on the W2 terminal.
- The inducer motor is enabled at high speed.
- Closure of the 2nd stage pressure switch will energize the high fire stage of the gas valve.
- The 2nd stage gas heat speed of the indoor blower is energized.

Heating Mode Speed Selection

To change the main blower speed in HEATING mode, follow the following steps:

1. Press the left or right switch until LED displays “gA1” (for single-stage HEATING) or “gA2” (for two-stage HEATING). Press the center switch and LED will display the selected speed number as Fxx (xx: Blower speed number).
2. The control will rotate available speed number every time left / right switches are pressed. The table below shows the available speeds for low & high heat mode.
3. Press the center switch to save the selection.

NOTE: Always refer to the Heating Chart to choose from available heating speeds

THERMOSTAT CALL	AVAILABLE SPEEDS
W/W1	F01 (DEFAULT)
	F03
	F04
W2	F02 (DEFAULT)
	F04
	F05

One and Two-Stage Heating Speed Table for 2 Stage IFC

Continuous Fan Mode Speed Selection

To change the main blower speed in circulation mode, follow the following steps:

1. Press the left or right switch until LED displays “FSd”. Press the center switch and LED will display the selected speed number as Fxx (xx: Blower speed number from 1 to 9). F03 is the default speed for circulation.
2. The control will rotate available speed number every time left/right switches are pressed. All 9 speeds are available for circulation.
3. When the center switch is pressed, the current displayed speed will be selected, and control will immediately apply that speed setting.

THERMOSTAT CALL	AVAILABLE SPEEDS
G	F01
	F02
	F03 (DEFAULT)
	F04
	F05
	F06
	F07
	F08
	F09

Circulation Speed Table for 2 Stage IFC

Cooling Mode Sequence of Operation

Low Stage Cooling Mode Sequence:

On a call for low stage cooling, the Y/Y1 or Y/Y1 and G thermostat contacts close signaling the furnace control board with 24 VAC on Y/Y1 or Y/Y1 and G terminals.

- The 7-Segment will display the cool mode:1 A C
- The compressor and condenser fan are energized.
- The circulator fan is energized at low cool speed after a cool on delay. The electronic air cleaner will also be energized.
- After the thermostat is satisfied, the compressor is de-energized and the Cool Mode Fan Off Delay period begins.
- Following the Cool Mode Fan Off Delay period, the cool circulator and air cleaner relay are de-energized.

2nd Stage Cooling Mode Sequence:

On a call for 2nd stage cooling, the Y2 or Y2 and G thermostat contacts close signaling the furnace control board with 24 VAC on Y2 or Y2 and G terminals.

- The 7-Segment will display the cool mode: 2 A C
- The compressor and condenser fan are energized.
- The circulator fan is energized at cool speed after a cool on delay. The electronic air cleaner will also be energized.
- After the thermostat is satisfied, the compressor is de-energized and the Cool Mode Fan Off Delay period begins.
- Following the Cool Mode Fan Off Delay period, the cool circulator and air cleaner relay are de-energized

Cooling Mode Speed Selection

To change the main blower speed in COOLING mode, follow the following steps:

1. Press the left or right switch until LED displays “AC1 “(for single stage COOLING) or “AC2 “(for two-stage COOLING). Press the center switch and LED will display the selected speed number as Fxx (xx: Blower speed number from 1 to 9).
2. The control will rotate available speed number every time left/right switches are pressed. All 9 speeds are available for both Single and Two Stage cooling.
3. When the center switch is pressed, the current displayed speed will be selected, and control will apply the newly selected speed in next cooling call.

THERMOSTAT CALL	AVAILABLE SPEEDS
Y/Y1	F01
	F02
	F03
	F04 (DEFAULT)
	F05
	F06
	F07
	F08
	F09

Single-Stage Cooling Speed Table for 2 Stage IFC

THERMOSTAT CALL	AVAILABLE SPEEDS
Y2	F01
	F02
	F03
	F04
	F05 (DEFAULT)
	F06
	F07
	F08
	F09

Two-Stage Cooling Speed Table for 2 Stage IFC

Furnace Shutdown

1. Set the thermostat to the lowest setting. The integrated control will close the gas valve and extinguish flame. Following a 15 second delay, the induced draft blower will be de-energized. After the blower off delay time expires, the blower de-energizes.
2. Remove the burner compartment door and move the furnace gas valve manual control to the OFF position.
3. Close the manual gas shutoff valve external to the furnace.
4. Replace the burner compartment door.

Gas Supply Pressure Measurement

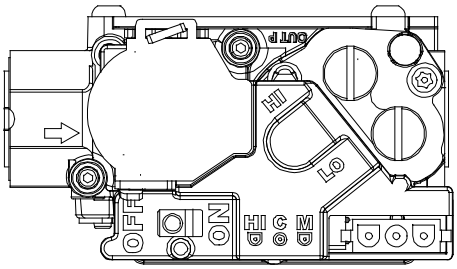

White-Rogers Model 36J54 (Two-Stage)
Figure 18A

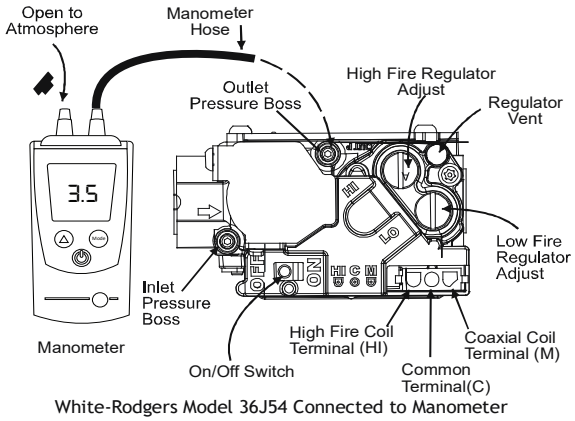

White-Rogers Model 36J54 Connected to Manometer
Figure 18B

INLET GAS SUPPLY PRESSURE		
Natural Gas	Minimum: 4.5" w.c.	Maximum: 10.0" w.c.
Propane Gas	Minimum: 11.0" w.c.	Maximum: 13.0" w.c.

CAUTION

To prevent unreliable operation or equipment damage, the gas manifold pressure must be as specified on the unit rating plate with all other household gas fired appliances operating.

The line pressure supplied to the gas valve must be within the range specified below. The supply pressure can be measured at the gas valve inlet pressure tap or at a hose fitting installed in the gas piping drip leg. The supply pressure must be measured with the burners operating. To measure the gas supply pressure, use the following procedure.

1. Turn OFF gas to furnace at the manual gas shutoff valve external to the furnace.
2. Connect a calibrated manometer (or appropriate gas pressure gauge) at either the gas valve inlet pressure tap or the gas piping drip leg. See White-Rodgers 36J54 gas valve (Figure 20B) to locate the inlet pressure tap.

NOTE: If using the inlet pressure tap on the White-Rodgers 36J54 gas valve, then use the 36G/J Valve Pressure Check Kit, Part No. 0151K00000S.

3. Turn ON the gas supply and operate the furnace and all other gas consuming appliances on the same gas supply line.
4. Measure furnace gas supply pressure with burners firing. Supply pressure must be within the range specified in the *Inlet Gas Supply Pressure* table.

If supply pressure differs from table, make the necessary adjustments to pressure regulator, gas piping size, etc., and/or consult with local gas utility.

5. Turn OFF gas to furnace at the manual shutoff valve and disconnect manometer. Reinstall plug before turning on gas to furnace.
6. Turn OFF any unnecessary gas appliances stated in step three.

Gas Manifold Pressure Measurement and Adjustment

CAUTION

To prevent unreliable operation or equipment damage, the gas manifold pressure must be as specified on the unit rating plate. Only minor adjustments should be made by adjusting the gas valve pressure regulator.

Only small variations in gas pressure should be made by adjusting the gas valve pressure regulator. The manifold pressure must be measured with the burners operating. To measure and adjust the manifold pressure, use the following procedure.

1. Turn OFF gas to furnace at the manual gas shutoff valve external to the furnace.
2. Turn off all electrical power to the system.
3. Outlet pressure tap connections:
   White-Rodgers 36J54 valve: Back outlet pressure test screw (inlet/outlet pressure tap) out one turn (counterclockwise, not more than one turn).
4. Attach a hose and manometer to outlet pressure tap.
5. Turn ON the gas supply.

Run High Fire

The furnace should be inspected by a qualified installer, or service agency at least once per year. This check should be performed at the beginning of the heating season. This will ensure that all furnace components are in proper working order and that the heating system functions appropriately. Pay particular attention to the following items. Repair or service as necessary.

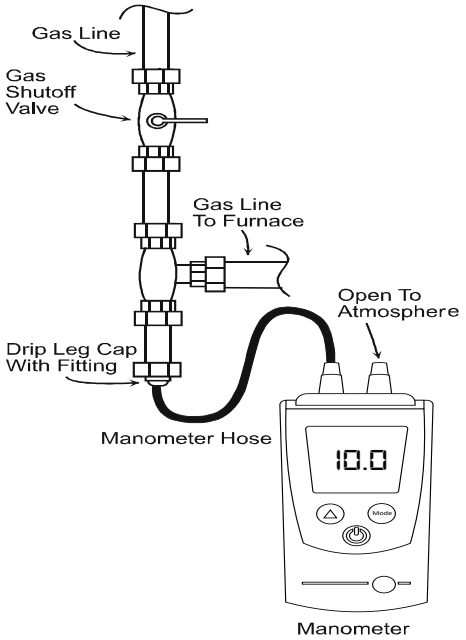

Measuring Inlet Gas Pressure (Alt. Method)
Figure 19

NOTE: When converting from natural gas to L.P. consult your distributor for proper conversion kit.

Manifold Gas Pressure		
Gas	**Range**	**Nominal**
Natural	3.2 - 3.8" w.c.	3.5" w.c.
Propane	9.7 - 10.3" w.c.	10.0" w.c.

COOLING & CIRCULATION AIFLOW										
MODEL	T. STAT CALL	TAP #	EXTERNAL STATIC PRESSURE, (INCHES WATER COLUMN)							
			0.1	0.2	0.3	0.4	0.5	0.6	0.7	0.8
			CFM	CFM	CFM	CFM	CFM	CFM	CFM	CFM
DM80TN0403A*	Y/Y1, Y2 , G	F01	749	697	652	607	554	509	459	406
		F02	1130	1090	1059	1022	991	957	926	895
		F03	584	553	501	447	395	335	N/A	N/A
		F04	882	841	800	760	719	678	641	602
		F05	1158	1113	1090	1057	1024	996	964	935
		F06	925	881	840	800	760	721	681	645
		F07	1270	1235	1208	1179	1147	1119	1088	1060
		F08	1330	1295	1273	1251	1223	1195	1168	1142
		F09	1417	1380	1359	1336	1314	1288	1261	1238
DM80TN0603A*	Y/Y1, Y2 , G	F01	880	837	794	756	717	678	641	602
		F02	1268	1221	1188	1154	1122	1091	1060	1029
		F03	659	599	542	490	437	383	320	N/A
		F04	1026	982	943	906	869	834	799	765
		F05	1308	1262	1224	1197	1167	1141	1117	1089
		F06	1118	1070	1033	997	963	929	896	865
		F07	1087	1044	1008	973	938	905	871	841
		F08	1382	1341	1311	1291	1263	1234	1206	1177
		F09	1492	1448	1409	1381	1354	1332	1310	1288
DM80TN0603B*	Y/Y1, Y2 , G	F01	1125	1089	1052	1013	973	947	909	863
		F02	1413	1386	1360	1330	1302	1270	1242	1211
		F03	720	660	614	542	468	413	359	313
		F04	1146	1113	1076	1039	1002	969	933	891
		F05	1370	1345	1317	1286	1260	1224	1187	1168
		F06	922	872	830	786	736	683	616	565
		F07	1252	1198	1153	1110	1069	1028	990	953
		F08	1289	1260	1232	1194	1161	1125	1087	1073
		F09	1544	1500	1459	1419	1387	1349	1317	1286
DM80TN0803B*	Y/Y1, Y2 , G	F01	1036	985	940	895	848	799	751	705
		F02	1391	1352	1314	1278	1241	1209	1175	1140
		F03	710	646	580	515	432	367	314	274
		F04	1138	1091	1045	1001	959	920	876	832
		F05	1209	1166	1124	1083	1045	1005	964	923
		F06	977	931	880	836	785	734	683	626
		F07	1298	1255	1216	1178	1140	1102	1067	1028
		F08	1456	1414	1376	1341	1302	1270	1238	1200
		F09	1533	1488	1452	1415	1383	1350	1317	1286
DM80TN0804B*	Y/Y1, Y2 , G	F01	1104	1056	1010	968	925	880	831	784
		F02	1395	1347	1309	1270	1233	1199	1164	1125
		F03	841	657	595	522	439	367	315	N/A
		F04	1311	1267	1226	1189	1150	1114	1072	1034
		F05	1490	1447	1407	1373	1336	1303	1269	1237
		F06	1553	1510	1469	1435	1401	1368	1335	1300
		F07	1776	1735	1695	1661	1628	1601	1570	1542
		F08	1593	1548	1508	1474	1440	1409	1376	1343
		F09	1853	1812	1773	1739	1708	1679	1650	1623

COOLING & CIRCULATION AIFLOW										
MODEL	T. STAT CALL	TAP #	EXTERNAL STATIC PRESSURE, (INCHES WATER COLUMN)							
			0.1	0.2	0.3	0.4	0.5	0.6	0.7	0.8
			CFM	CFM	CFM	CFM	CFM	CFM	CFM	CFM
DM80TN0805C*	Y/Y1, Y2 , G	F01	1420	1359	1301	1254	1206	1152	1100	1044
		F02	1825	1769	1718	1673	1629	1584	1540	1497
		F03	826	744	661	573	485	399	339	N/A
		F04	1623	1567	1516	1468	1423	1374	1328	1281
		F05	1697	1644	1596	1551	1505	1457	1413	1367
		F06	1741	1686	1639	1592	1550	1504	1462	1417
		F07	1906	1855	1809	1763	1722	1682	1641	1597
		F08	1966	1914	1869	1825	1782	1745	1703	1660
		F09	2201	2152	2107	2073	2034	1996	1962	1925
DM80TN0805D*	Y/Y1, Y2 , G	F01	1175	1109	1044	977	905	830	750	681
		F02	1828	1778	1731	1687	1643	1597	1556	1512
		F03	972	899	822	741	659	574	503	438
		F04	1401	1338	1290	1234	1179	1126	1073	1014
		F05	1627	1574	1526	1479	1428	1370	1326	1285
		F06	1863	1810	1772	1726	1683	1638	1596	1547
		F07	1920	1873	1835	1795	1751	1704	1673	1633
		F08	2026	1980	1932	1894	1852	1816	1777	1737
		F09	2183	2140	2095	2057	2020	1978	1947	1917
DM80TN1005C*	Y/Y1, Y2 , G	F01	1589	1539	1498	1459	1417	1377	1334	1293
		F02	2153	2119	2073	2044	2003	1971	1939	1907
		F03	1034	745	642	550	462	374	329	287
		F04	1579	1525	1483	1443	1400	1358	1313	1260
		F05	1891	1843	1804	1767	1730	1698	1660	1626
		F06	1824	1784	1739	1700	1667	1624	1592	1555
		F07	1731	1677	1637	1600	1556	1518	1474	1439
		F08	1944	1901	1864	1823	1786	1748	1719	1680
		F09	2219	2175	2134	2106	2071	2039	2008	1982
DM80TN1205D*	Y/Y1, Y2 , G	F01	1355	1301	1249	1196	1142	1078	1023	970
		F02	1806	1764	1729	1688	1654	1615	1578	1535
		F03	851	774	692	615	535	470	411	359
		F04	1154	1098	1043	983	932	874	819	755
		F05	1712	1660	1614	1580	1540	1501	1461	1417
		F06	1617	1568	1525	1481	1439	1402	1354	1309
		F07	1869	1816	1773	1731	1693	1661	1629	1589
		F08	1947	1903	1865	1833	1802	1769	1743	1708
		F09	2107	2066	2030	1996	1963	1932	1899	1867

NOTE:

Y/Y1 default speed is F04
Y2 default speed is F05
G default speed is F01

RECOMMENDED AIRFLOW SPEEDS FOR CONNECTION WITH 2 STAGE OUTDOOR MODELS		
FURNACE MODEL	Y2	Y1
DM80TN0805D*	F02	F01
DM80TN1205D*	F08	F01

NOTE: For a single-stage outdoor unit, the Y connection from the thermostat can be connected to the Y/Y1 Y1 or Y2 connection on the furnace control module. A call for cooling will energize that connection on the furnace control module. The desired cooling fan speed should be adjusted for the furnace control module connection used (Y1 or Y2) to provide the correct cooling airflow.

HEATING AIFLOW

MODEL	T. STAT CALL	TAP #	EXTERNAL STATIC PRESSURE, (INCHES WATER COLUMN)													TEMP RANGE
			0.1		0.2		0.3		0.4		0.5		0.6	0.7	0.8	
			CFM	RISE	CFM	RISE	CFM	RISE	CFM	RISE	CFM	RISE	CFM	CFM	CFM	
DM80TN0403A*	W/W1	F01^	749	28	697	30	652	32	607	34	554	37	509	459	406	15 - 45
		F03^^	584	N/A	553	N/A	501	N/A	447	N/A	395	N/A	335	N/A	N/A	
		F04	882	24	841	25	800	26	760	27	719	29	678	641	602	
	W2	F02^	1130	26	1090	27	1059	28	1022	29	991	30	957	926	895	
		F04	882	34	841	35	800	37	760	39	719	41	678	641	602	
		F05	1158	26	1113	27	1090	27	1057	28	1024	29	996	964	935	
DM80TN0603A*	W/W1	F01^	880	35	837	37	794	39	756	41	717	43	678	641	602	20 - 50
		F03^^	659	N/A	599	N/A	542	N/A	490	N/A	437	N/A	383	320	N/A	
		F04	1026	30	982	32	943	33	906	34	869	36	834	799	765	
	W2	F02^	1268	35	1221	36	1188	37	1154	38	1122	40	1091	1060	1029	
		F04^^	1026	N/A	982	N/A	943	N/A	906	N/A	869	N/A	834	799	765	
		F05	1308	34	1262	35	1224	36	1197	37	1167	38	1141	1117	1089	
DM80TN0603B*	W/W1	F01^	1125	28	1089	29	1052	30	1013	31	973	32	947	909	863	15 - 45
		F03^^	720	N/A	660	N/A	614	N/A	542	N/A	468	N/A	413	359	313	
		F04	1146	27	1113	28	1076	29	1039	30	1002	31	969	933	891	
	W2	F02^	1413	31	1386	32	1360	33	1330	33	1302	34	1270	1242	1211	
		F04	1146	39	1113	40	1076	41	1039	43	1002	44	969	933	891	
		F05	1370	32	1345	33	1317	34	1286	35	1260	35	1224	1187	1168	
DM80TN0803B*	W/W1	F01^	1036	40	985	42	940	44	895	46	848	49	799	751	705	30 - 60
		F03^^	710	N/A	646	N/A	580	N/A	515	N/A	432	N/A	367	314	274	
		F04	1138	36	1091	38	1045	40	1001	41	959	43	920	876	832	
	W2	F02^	1391	43	1352	44	1314	45	1278	46	1241	48	1209	1175	1140	
		F04^^	1138	N/A	1091	N/A	1045	N/A	1001	N/A	959	N/A	920	876	832	
		F05	1209	49	1166	51	1124	53	1083	55	1045	57	1005	964	923	
DM80TN0804B*	W/W1	F01^	1104	38	1056	39	1010	41	968	43	925	45	880	831	784	30 - 60
		F03^^	841	N/A	657	N/A	595	N/A	522	N/A	439	N/A	367	315	N/A	
		F04	1311	32	1267	33	1226	34	1189	35	1150	36	1114	1072	1034	
	W2	F02^	1395	42	1347	44	1309	45	1270	47	1233	48	1199	1164	1125	
		F04	1311	45	1267	47	1226	48	1189	50	1150	52	1114	1072	1034	
		F05	1490	40	1447	41	1407	42	1373	43	1336	44	1303	1269	1237	
DM80TN0805C*	W/W1	F01^	1420	29	1359	31	1301	32	1254	33	1206	34	1152	1100	1044	25 - 55
		F03^^	826	N/A	744	N/A	661	N/A	573	N/A	485	N/A	399	339	N/A	
		F04^^	1623	N/A	1567	N/A	1516	N/A	1468	N/A	1423	N/A	1374	1328	1281	
	W2	F02^	1825	32	1769	33	1718	34	1673	35	1629	36	1584	1540	1497	
		F04	1623	37	1567	38	1516	39	1468	40	1423	42	1374	1328	1281	
		F05	1697	35	1644	36	1596	37	1551	38	1505	39	1457	1413	1367	
DM80TN0805D*	W/W1	F01^	1175	35	1109	37	1044	40	977	42	905	46	830	750	681	20 - 50
		F03^^	972	N/A	899	N/A	822	N/A	741	N/A	659	N/A	574	503	438	
		F04	1401	30	1338	31	1290	32	1234	34	1179	35	1126	1073	1014	
	W2	F02^	1828	32	1778	33	1731	34	1687	35	1643	36	1597	1556	1512	
		F04	1401	42	1338	44	1290	46	1234	48	1179	50	1126	1073	1014	
		F05	1627	36	1574	38	1526	39	1479	40	1428	41	1370	1326	1285	
DM80TN1005C*	W/W1	F01^	1589	33	1539	34	1498	35	1459	36	1417	37	1377	1334	1293	25 - 55
		F03^^	1034	N/A	745	N/A	642	N/A	550	N/A	462	N/A	374	329	287	
		F04	1579	33	1525	34	1483	35	1443	36	1400	37	1358	1313	1260	
	W2	F02^	2153	34	2119	35	2073	36	2044	36	2003	37	1971	1939	1907	
		F04	1579	47	1525	49	1483	50	1443	51	1400	53	1358	1313	1260	
		F05	1891	39	1843	40	1804	41	1767	42	1730	43	1698	1660	1626	
DM80TN1205D*	W/W1	F01^	1355	46	1301	48	1249	50	1196	52	1142	54	1078	1023	970	40 - 70
		F03^^	851	N/A	774	N/A	692	N/A	615	N/A	535	N/A	470	411	359	
		F04	1154	54	1098	57	1043	60	983	63	932	67	874	819	755	
	W2	F02^	1806	49	1764	50	1729	51	1688	53	1654	54	1615	1578	1535	
		F04^^	1154	N/A	1098	N/A	1043	N/A	983	N/A	932	N/A	874	819	755	
		F05	1712	52	1660	54	1614	55	1580	56	1540	58	1501	1461	1417	

NOTE:
^DEFAULT & RECOMMENDED
^^NOT RECOMMENDED FOR HEATING

COOLING & CIRCULATION AIFLOW										
MODEL	T. STAT CALL	TAP #	EXTERNAL STATIC PRESSURE, (INCHES WATER COLUMN)							
			0.1	0.2	0.3	0.4	0.5	0.6	0.7	0.8
			CFM	CFM	CFM	CFM	CFM	CFM	CFM	CFM
DC80TN0403A*	Y/Y1 , Y2 , G	F01	712	663	610	559	514	462	395	337
		F02	1120	1081	1053	1022	990	955	918	887
		F03	619	568	510	459	404	325	269	216
		F04	825	784	741	694	650	609	563	520
		F05	1000	963	930	893	852	816	776	745
		F06	889	844	799	758	721	684	646	601
		F07	1212	1198	1161	1138	1103	1076	1037	1007
		F08	1362	1342	1307	1273	1252	1237	1211	1185
		F09	1426	1405	1380	1359	1335	1312	1280	1254
DC80TN0603A*	Y/Y1 , Y2 , G	F01	706	655	604	555	505	455	395	328
		F02	1035	991	951	913	876	844	807	770
		F03	630	572	521	466	411	341	269	216
		F04	897	851	808	764	725	686	646	603
		F05	1155	1113	1074	1039	1006	974	945	913
		F06	1123	1077	1041	1006	973	941	907	875
		F07	1255	1214	1181	1147	1116	1087	1056	1028
		F08	1388	1331	1298	1266	1235	1207	1179	1151
		F09	1421	1380	1348	1318	1289	1262	1233	1207
DC80TN0603B*	Y/Y1 , Y2 , G	F01	868	811	752	692	631	510	452	399
		F02	1157	1105	1058	1014	968	924	877	827
		F03	738	672	598	510	413	360	309	N/A
		F04	967	912	861	809	755	693	609	565
		F05	1207	1158	1112	1065	1021	978	934	886
		F06	1215	1182	1146	1111	1078	1041	1007	975
		F07	1325	1294	1254	1213	1176	1137	1097	1054
		F08	1352	1324	1293	1264	1229	1199	1170	1138
		F09	1464	1430	1394	1358	1322	1302	1267	1232
DC80TN0804B*	Y/Y1 , Y2 , G	F01	1011	958	912	866	815	763	710	642
		F02	1393	1348	1308	1270	1230	1196	1158	1123
		F03	760	697	636	569	481	402	349	300
		F04	1309	1261	1218	1182	1142	1103	1064	1025
		F05	1459	1414	1371	1336	1297	1264	1229	1193
		F06	1580	1534	1495	1459	1429	1390	1356	1324
		F07	1753	1713	1677	1642	1611	1576	1549	1518
		F08	1523	1483	1438	1403	1370	1336	1299	1266
		F09	1643	1599	1562	1525	1491	1462	1431	1394
DC80TN0805C*	Y/Y1 , Y2 , G	F01	1176	1105	1020	935	864	797	729	673
		F02	1513	1459	1400	1335	1253	1182	1122	1067
		F03	1022	813	674	585	511	431	334	282
		F04	1640	1595	1540	1489	1436	1367	1307	1254
		F05	1843	1786	1747	1690	1643	1575	1497	1435
		F06	1859	1819	1779	1734	1691	1641	1593	1520
		F07	2028	1982	1946	1907	1861	1814	1749	1683
		F08	2096	2045	2006	1974	1927	1882	1818	1765
		F09	2203	2170	2138	2113	2074	2032	1990	1948
DC80TN1005C*	Y/Y1 , Y2 , G	F01	1628	1571	1521	1472	1425	1380	1337	1291
		F02	2159	2116	2072	2032	1992	1953	1916	1882
		F03	956	777	675	587	468	377	324	296
		F04	1561	1499	1441	1385	1336	1289	1243	1197
		F05	2222	2174	2132	2090	2053	2013	1976	1944
		F06	1833	1784	1735	1688	1645	1605	1562	1520
		F07	1714	1659	1611	1564	1519	1473	1432	1387
		F08	1926	1894	1849	1807	1764	1720	1683	1642
		F09	1899	1853	1804	1761	1720	1681	1640	1602

NOTE:
Y/Y1 default speed is F04
Y2 default speed is F05
G default speed is F01

RECOMMENDED AIRFLOW SPEEDS FOR CONNECTION		
FURNACE MODEL	Y2	Y1
DC80TN0805C*	F05	F01

NOTE: For a single-stage outdoor unit, the Y connection from the thermostat can be connected to the Y/Y1 Y1 or Y2 connection on the furnace control module. A call for cooling will energize that connection on the furnace control module. The desired cooling fan speed should be adjusted for the furnace control module connection used (Y1 or Y2) to provide the correct cooling airflow.

MODEL	T. STAT CALL	TAP #	HEATING AIFLOW													TEMP RANGE
			EXTERNAL STATIC PRESSURE, (INCHES WATER COLUMN)													
			0.1		0.2		0.3		0.4		0.5		0.6	0.7	0.8	
			CFM	RISE	CFM	RISE	CFM	RISE	CFM	RISE	CFM	RISE	CFM	CFM	CFM	
DC80TN0403A*	W/W1	F01^	712	29	663	31	610	34	559	37	514	40	514	395	337	15 - 45
		F03^^	619	N/A	568	N/A	510	N/A	459	N/A	404	N/A	325	269	216	
		F04	825	25	784	26	741	28	694	30	650	32	609	563	520	
	W2	F02^	1120	26	1081	27	1053	28	1022	29	990	30	955	918	887	
		F04	825	36	784	38	741	40	694	43	650	45	609	563	520	
		F05	1000	30	963	31	930	32	893	33	852	35	816	776	745	
DC80TN0603A*	W/W1	F01^	706	44	655	48	604	52	555	56	505	N/A	455	395	328	25-55
		F03^^	630	N/A	572	N/A	521	N/A	466	N/A	411	N/A	341	269	216	
		F04	897	35	851	37	808	39	764	41	725	43	686	646	603	
	W2	F02^	1035	43	991	45	951	47	913	49	876	51	844	807	770	
		F04^^	897	N/A	851	N/A	808	N/A	764	N/A	725	N/A	686	646	603	
		F05	1155	38	1113	40	1074	41	1039	43	1006	44	974	945	913	
DC80TN0603B*	W/W1	F01^	868	36	811	38	752	41	692	45	631	49	510	452	399	25-55
		F03^^	738	N/A	672	N/A	598	N/A	510	N/A	413	N/A	360	309	N/A	
		F04	967	32	912	34	861	36	809	38	755	41	693	609	565	
	W2	F02^	1157	38	1105	40	1058	42	1014	44	968	46	924	877	827	
		F04^^	967	N/A	912	N/A	861	N/A	809	N/A	755	N/A	693	609	565	
		F05	1207	37	1158	38	1112	40	1065	42	1021	44	978	934	886	
DC80TN0804B*	W/W1	F01^	1011	41	958	43	912	46	866	48	815	51	763	710	642	30 - 60
		F03^^	760	N/A	697	N/A	636	N/A	569	N/A	481	N/A	402	349	300	
		F04	1309	32	1261	33	1218	34	1182	35	1142	36	1103	1064	1025	
	W2	F02^	1393	43	1348	44	1308	45	1270	47	1230	48	1196	1158	1123	
		F04	1309	45	1261	47	1218	49	1182	50	1142	52	1103	1064	1025	
		F05	1459	41	1414	42	1371	43	1336	44	1297	46	1264	1229	1193	
DC80TN0805C*	W/W1	F01^	1176	35	1105	38	1020	41	935	44	864	48	797	729	673	30 - 60
		F03^^	1022	N/A	813	N/A	674	N/A	585	N/A	511	N/A	431	334	282	
		F04^^	1640	N/A	1595	N/A	1540	N/A	1489	N/A	1436	N/A	1367	1307	1254	
	W2	F02	1513	39	1459	41	1400	42	1335	44	1253	47	1182	1122	1067	
		F04	1640	36	1595	37	1540	38	1489	40	1436	41	1367	1307	1254	
		F05	1843	32	1786	33	1747	34	1690	35	1643	36	1575	1497	1435	
DC80TN1005C*	W/W1	F01^	1628	32	1571	33	1521	34	1472	35	1425	36	1380	1337	1291	20 - 50
		F03^^	956	N/A	777	N/A	675	N/A	587	N/A	468	N/A	377	324	296	
		F04	1561	33	1499	35	1441	36	1385	37	1336	39	1289	1243	1197	
	W2	F02^	2159	34	2116	35	2072	36	2032	36	1992	37	1953	1916	1882	
		F04^^	1561	N/A	1499	N/A	1441	N/A	1385	N/A	1336	N/A	1289	1243	1197	
		F05	2222	33	2174	34	2132	35	2090	35	2053	36	2013	1976	1944	

NOTE:

^DEFAULT & RECOMMENDED

^^NOT RECOMMENDED FOR HEATING

2 STAGE STATUS CODES

Menu Description	LED Display		Notes
	Main Menu	Option Menu	
Active Alarm menu	Err	Exx	(xx: code numbers)
Last 6 Faults	L6F	Exx	(xx: code numbers)
Code Release Number	Cr	CR Number	
Reset to Factory Default	rFd	yes, no	
Blower Speed for Continous Fan Mode	FSd	Fxx	(xx: Blower Speed Number F01, F02..)
Blower Speed for 1st Stage Compressor Mode	AC1	Fxx	(xx: Blower Speed Number F01, F02..)
Blower Speed for 2nd Stage Compressor Mode	AC2	Fxx	(xx: Blower Speed Number F01, F02..)
Cool On Delay	Cnd	Delay, Seconds	Default set at 7 Secs, Adjustments can be made in 7 Secs increments from 0 to 35 Secs
Cool Off Delay	CFd	Delay, Seconds	Default set at 65 Secs, Adjustments can be made in 5 Secs increments from 0 to 120 Secs
Blower Speed for Gas Heat Mode	GAF	Fxx	(xx: Blower Speed Number F01, F02..)
Gas Heat On Delay	Gnd	Delay, Seconds	Default set at 30 Secs, Adjustments can be made in 5 Secs increments from 5 to 30 Secs
Gas heat Off Delay	GFd	Delay, Seconds	Default set at 90 Secs, Adjustments can be made in 30 Secs increments from 30 to 180 Secs
Automatic Heat Staging - For Two Stage Control	AHS	no, 10, 20, 30, 60, AUt	Refer to Section " CHANGING HEATING MODE SETTING"

Mode	Main Menu
Idle	IdL
Continous Fan	FAn
Compressor Cooling, Low Stage	1AC
Compressor Cooling, High Stage	2AC
Gas heat - Single Stage Control	9H
OEM test Mode	EOL

2 Stage Troubleshooting Codes

TROUBLESHOOTING CHART			
Symptom	**LED Status**	**Fault Description**	**Corrective Actions**
Normal operation	I dL	Normal operation	None
Furnace fails to operate	EE0	Furnace lockout due to an excessive number of ignition "retries" (3 total) Failure to establish flame Loss of flame after establishment	Locate and correct gas interruption Check front cover pressure switch operation and verify proper drainage (hose, wiring, contact operation), correct if necessary Replace or realign igniter Check flame sense signal, clean sensor if coated or oxidized Check flue piping for blockage, proper length, elbows, and termination Verify proper induced draft blower performance
Furnace fails to operate	EE1	Low stage pressure switch circuit is closed at start of heating cycle Low stage pressure switch contacts sticking Short in pressure switch circuit wiring	Replace low stage pressure switch Repair short in wiring
Induced draft blower runs continuously with no furnace operation	EE2	Low stage pressure switch circuit is not closed Pressure switch hose blocked pinched, or connected improperly Blocked flue and/or inlet air pipe, blocked drain system or weak induced draft blower Incorrect pressure switch set point or malfunctioning switch contacts Loose or improperly connected wiring	Inspect pressure switch hose, repair/replace if necessary Inspect flue and/or inlet air piping for blockage, proper length, elbows, and termination Check drain system, correct as necessary Check induced draft blower performance, correct as necessary Check pressure switch operation, replace as needed Tighten or correct wiring connection
Circulator blower runs continuously No furnace operation	EE3	Primary limit circuit is open Insufficient conditioned air over the heat exchanger Blocked filters, restrictive ductwork, improper circulator blower speed, or failed circulator blower motor Loose or improperly connected wiring in high limit circuit	Check filters and ductwork for blockage Clean filters or remove obstruction Check circulator blower speed and performance Correct speed or replace blower motor if necessary Tighten or correct wiring connection
Induced draft blower and circulator blower runs continuously No furnace operation	EE4	Flame sensed with no call for heat Short to ground in flame sense circuit Lingering burner flame Slow closing gas valve	Correct short at flame sensor or in flame sensor wiring Check for lingering or lazy flame Verify proper operation of gas valve
No furnace operation	EE5	Open fuse Short in low voltage wiring	Replace fuse Locate and correct short in low voltage wiring
Normal furnace operation	EE6	Flame sense micro amp signal is minimal Flame sensor is coated/oxidized Flame sensor incorrectly positioned in burner fame Lazy burner flame due to improper gas pressure or combustion air	Clean flame sensor if coated or oxidized Inspect for proper flame sensor alignment Check inlet air piping for blockage, proper length, elbows, and termination Compare current gas pressure to rating plate and adjust as needed
Furnace fails to operate	EEL	Problem with igniter circuit Improperly connected or shorted igniter Poor unit ground Igniter relay fault on integrated control module	Check and correct wiring from integrated control module to igniter Diagnose and replace shorted igniter as needed Verify and correct unit ground wiring if needed Check igniter output from control, replace if necessary

To View & Clear Fault Codes

- Press either the Left or Right switch until L 6 F is displayed.
- Press the center switch to view stored faults.
- Press and hold the center switch for 5 to 30 seconds.
- All stored faults will be erased, and the display will flash - - - three times and return to L 6 F.

2 Stage Troubleshooting Codes

TROUBLESHOOTING CHART			
Symptom	**LED Status**	**Fault Description**	**Corrective Actions**
Furnace fails to operate on high stage; furnace operates normally on low stage Induced draft blower operating	EE8	High stage pressure switch circuit is closed at start of heating cycle. High stage pressure switch contacts sticking Shorts in pressure switch circuit wiring	Diagnose and replace high stage pressure switch if needed Repair short in wiring
Furnace fails to operate on high stage; furnace operates normally on low stage Induced draft blower operating	EE9	High stage pressure switch circuit is not closed	Inspect pressure switch hose, repair/replace if necessary Inspect flue and/or inlet air piping for blockage, proper length, elbows, and termination Check drain system, correct as necessary Check induced draft blower performance, correct as necessary Tighten or correct wiring connection
Furnace fails to operate	EEA	Polarity of 115 volt AC is reversed Poor unit ground	Correct polarity, check and correct wiring if necessary Verify proper ground, correct if necessary
Furnace fails to operate	EEb	Gas valve is not energized when it should be External Gas Valve Error	Check wiring in gas valve circuit Replace integrated control board
Furnace fails to operate	EEC	Gas valve is energized when it should not be Internal gas valve error	Check wiring in gas valve circuit Replace integrated control board
Furnace fails to operate. Integrated control module LED display provides no signal	None	No 115 power to furnace or no 24 volt power to integrated control module. Blown fuse or tripped circuit breaker Integrated control module is non- functional	Restore high voltage power to furnace and integrated control module. Correct condition which caused fuse to open, replace fuse Replace non-functional integrated control module.
Furnace fails to operate	E10	Grounding fault Poor neutral connection	Verify neutral wire connection to furnace & continuity to ground source
Furnace fails to operate	E11	Open roll out switch	Check for correct gas pressure Check for correct burner alignment Check for and correct burner restriction
Furnace fails to operate	EEn	Ignitor Open	Check for Ignitor wiring. Replace Damaged Ignitor
Furnace fails to operate	EEJ	Inducer relay Error	Replace integrated control board
Twinning feature not working	EEH	TWIN Error	Check for wiring connections. Replace integrated control board
Furnace fails to operate	EEE	Internal Faults or IRQ Loss in Control Board	Replace integrated control board
Furnace fails to operate and goes to hard lockout	EbL	Main blower motor is consuming very little current after heat on delay , below an expected value	Check for loose motor wiring connections. Verify if the blower motor is burnt, replace blower motor if found burnt
Furnace fails to operate and goes to hard lockout	EbU	Main blower motor is consuming too much current during inducer pre-purge, above an expected value.	Verify wiring connections to and from motor are not loose. Verify that line voltage wires to the control and the main blower motor are not reversed at the control.

WIRING DIAGRAM

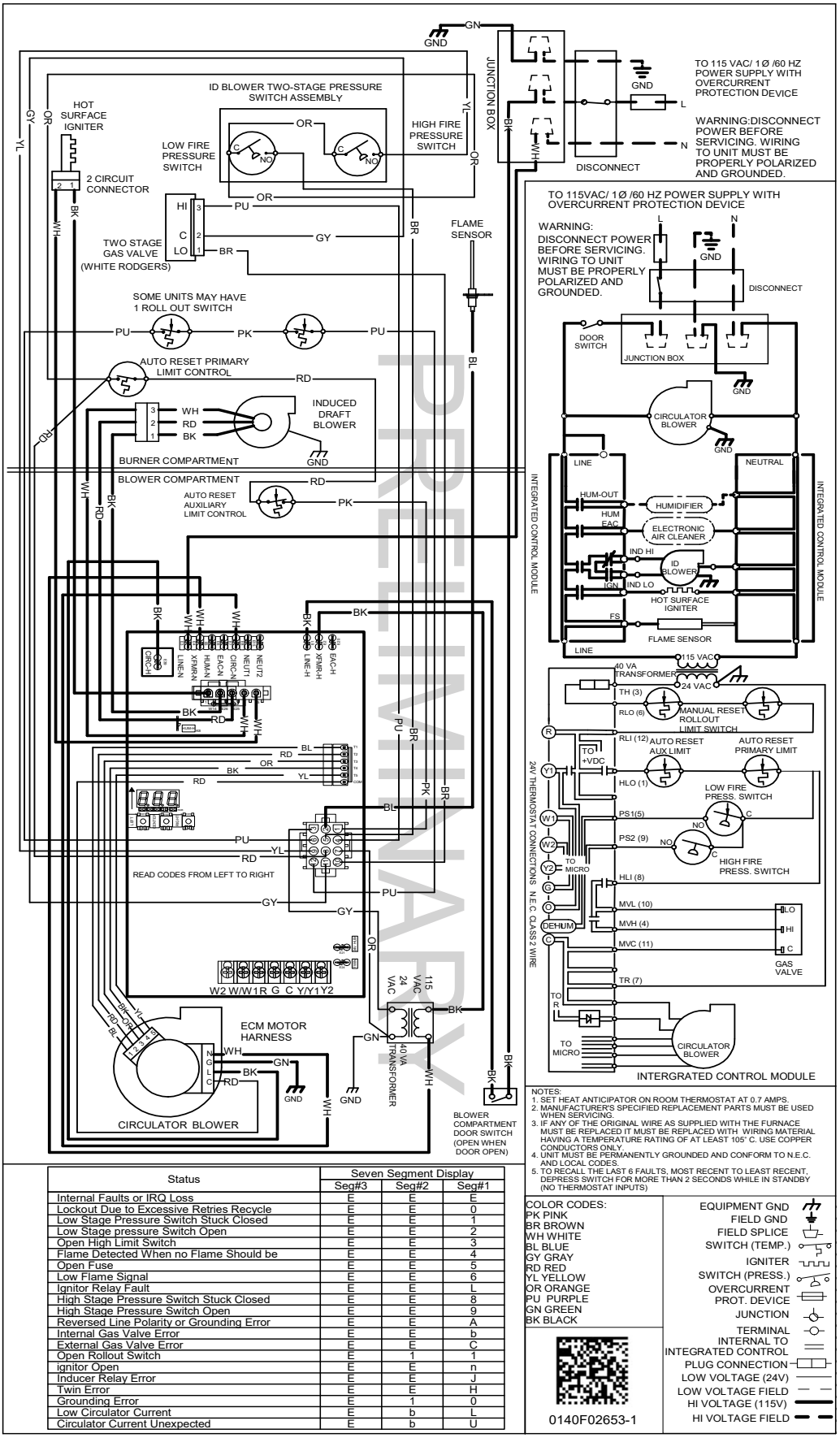

Status	Seven Segment Display		
	Seg#3	Seg#2	Seg#1
Internal Faults or IRQ Loss	E	E	E
Lockout Due to Excessive Retries Recycle	E	E	0
Low Stage Pressure Switch Stuck Closed	E	E	1
Low Stage pressure Switch Open	E	E	2
Open High Limit Switch	E	E	3
Flame Detected When no Flame Should be	E	E	4
Open Fuse	E	E	5
Low Flame Signal	E	E	6
Ignitor Relay Fault	E	E	L
High Stage Pressure Switch Stuck Closed	E	E	8
High Stage Pressure Switch Open	E	E	9
Reversed Line Polarity or Grounding Error	E	E	A
Internal Gas Valve Error	E	E	b
External Gas Valve Error	E	E	C
Open Rollout Switch	E	1	1
ignitor Open	E	E	n
Inducer Relay Error	E	E	J
Twin Error	E	E	H
Grounding Error	E	1	0
Low Circulator Current	E	b	L
Circulator Current Unexpected	E	b	U

NOTES:
1. SET HEAT ANTICIPATOR ON ROOM THERMOSTAT AT 0.7 AMPS.
2. MANUFACTURER'S SPECIFIED REPLACEMENT PARTS MUST BE USED WHEN SERVICING.
3. IF ANY OF THE ORIGINAL WIRE AS SUPPLIED WITH THE FURNACE MUST BE REPLACED IT MUST BE REPLACED WITH WIRING MATERIAL HAVING A TEMPERATURE RATING OF AT LEAST 105° C. USE COPPER CONDUCTORS ONLY.
4. UNIT MUST BE PERMANENTLY GROUNDED AND CONFORM TO N.E.C. AND LOCAL CODES.
5. TO RECALL THE LAST 6 FAULTS, MOST RECENT TO LEAST RECENT, DEPRESS SWITCH FOR MORE THAN 2 SECONDS WHILE IN STANDBY (NO THERMOSTAT INPUTS)

COLOR CODES:
PK PINK
BR BROWN
WH WHITE
BL BLUE
GY GRAY
RD RED
YL YELLOW
OR ORANGE
PU PURPLE
GN GREEN
BK BLACK

0140F02653-1

EQUIPMENT GND
FIELD GND
FIELD SPLICE
SWITCH (TEMP.)
IGNITER
SWITCH (PRESS.)
OVERCURRENT PROT. DEVICE
JUNCTION
TERMINAL
INTERNAL TO INTEGRATED CONTROL
PLUG CONNECTION
LOW VOLTAGE (24V)
LOW VOLTAGE FIELD
HI VOLTAGE (115V)
HI VOLTAGE FIELD

Wiring is subject to change. Always refer to the wiring diagram on the unit for the most up-to-date wiring.

Maintenance

WARNING

To avoid electric shock, injury or death, disconnect electrical power before performing any maintenance. If you must handle the igniter, handle with care. Touching the igniter element with bare fingers, rough handling or vibration could damage the igniter resulting in premature failure. Only a qualified servicer should ever handle the igniter.

Annual Inspection

The furnace should be inspected by a qualified installer, or service agency at least once per year. This check should be performed at the beginning of the heating season. This will ensure that all furnace components are in proper working order and that the heating system functions appropriately. Pay particular attention to the following items. Repair or service as necessary.

- Flue pipe system. Check for blockage and/or leakage. Check the outside termination and the connections at and internal to the furnace.
- Heat exchanger. Check for corrosion and/or buildup within the heat exchanger passageways.
- Burners. Check for proper ignition, burner flame, and flame signal.
- Wiring. Check electrical connections for tightness and/or corrosion. Check wires for damage.
- Filters.

Filters

CAUTION

To ensure proper unit performance, adhere to the filter sizes given in the recommended Minimum Filter Size Table or Specification Sheet applicable to your model.

Filter Maintenance

Improper filter maintenance is the most common cause of inadequate heating or cooling performance. Filters should be cleaned (permanent) or replaced (disposable) as required.

Filter Removal

Depending on the installation, differing filter arrangements can be applied. Filters can be installed in either the central return register or a side panel external filter rack (upflow only). A media air filter or electronic air cleaner can be used as an alternate filter. Follow the filter sizes given in the Recommended Minimum Filter size table to ensure proper unit performance.

To remove filters from an external filter rack in an upright upflow installation, follow the directions provided with external filter rack kit.

Horizontal Unit Filter Removal

Filters in horizontal installations are located in the central return register or the ductwork near the furnace.

To remove:

1. Turn OFF electrical power to furnace.
2. Remove filter(s) from the central return register or ductwork.
3. Replace filter(s) by reversing the procedure for removal.
4. Turn ON electrical power to furnace.

Media Air Filter or Electronic Air Cleaner Removal

Follow the manufacturer's directions for service.

Burners

Visually inspect the burner flames periodically during the heating season. Turn on the furnace at the thermostat and allow several minutes for flames to stabilize, since any dislodged dust will alter the flames normal appearance. Flames should be stable, quiet, soft, and blue (dust may cause orange tips but they must not be yellow). They should extend directly outward from the burners without curling, floating, or lifting off. Flames must not impinge on the sides of the heat exchanger firing tubes.

Induced Draft and Circulator Blowers

The bearings in the induced draft blower and circulator blower motors are permanently lubricated by the manufacturer. No further lubrication is required. Check motor windings for accumulation of dust which may cause overheating. Clean as necessary.

Flame Sensor (Qualified Servicer Only)

Under some conditions, the fuel or air supply can create a nearly invisible coating on the flame sensor. This coating acts as an insulator causing a drop in the flame sense signal. If the flame sense signal drops too low the furnace will not sense flame and will lock out. The flame sensor should be carefully cleaned by a qualified servicer using steel wool. Following cleaning, the flame sense signal should be as indicated in the Specifications Sheet.

Flue Passages (Qualified Servicer Only)

The heat exchanger flue passageways should be inspected at the beginning of each heating season.

Before Leaving an Installation

- Cycle the furnace with the thermostat at least three times. Verify cooling and fan only operation.
- Review the Owner's Manual with the homeowner and discuss proper furnace operation and maintenance.
- Leave literature packet near furnace.

Repair and Replacement Parts

- When ordering any of the listed functional parts, be sure to provide the furnace model, manufacturing, and serial numbers with the order.
- Although only functional parts are shown in the parts list, all sheet metal parts, doors, etc. may be ordered by description.
- Parts are available from your distributor.

Functional Parts List

Gas Valve
Gas Manifold
Natural Gas Orifice
Propane Gas Orifice
Igniter
Flame Sensor
Rollout Limit Switch
Primary Limit Switch
Pressure Switch
Induced Draft Blower
Door Switch
Blower Motor
Blower Wheel
Blower Mounting Bracket
Blower Cutoff
Blower Housing
Inductor
Heat Exchanger
Auxiliary Limit Switch
Integrated Control Module
Transformer

THIS PAGE INTENTIONALLY LEFT BLANK

CUSTOMER FEEDBACK
Daikin is very interested in all product comments.
Please fill out the feedback form on the following link:
https://daikincomfort.com/contact-us
You can also scan the QR code on the right to be directed to the feedback page.

PRODUCT REGISTRATION
Thank you for your recent purchase. Though not required to get the protection of the standard warranty, registering your product is a relatively short process, and entitles you to additional warranty protection, except that failure by California and Quebec residents to register their product does not diminish their warranty rights.

For Product Registration, please register by following this link:
https://daikincomfort.com/owner-support/product-registration
You can also scan the QR code on the right to be directed to the Product Registration page.

Our continuing commitment to quality products may mean a change in specifications without notice.
© 2021-2022 ***DAIKIN MANUFACTURING COMPANY, L.P.***

19001 Kermier Rd., Waller, TX 77484
wwww.daikincomfort.com