Installation Instructions for DM96SC Ultra Low NOx Variable Speed Gas Furnace

(Type FSP CATEGORY IV Direct or Non Direct Vent Air Furnace)
(Type FSP CATÉGORIE IV Direct ou four á air soufflé non direct)

These furnaces comply with requirements embodied in the American National Standard/National Standard of Canada ANSI Z21.47•CSA-2.3 Gas Fired Central Furnaces.

RECOGNIZE THIS SYMBOL AS A SAFETY PRECAUTION.

Installer:
Affix all manuals adjacent to the unit.

***NOTE: Please contact your distributor or our website for the applicable Specification Sheet referred to in this manual.**

WARNING

Only personnel that have been trained to install, adjust, service or repair(hereinafter, "service") the equipment specified in this manual should service the equipment. The manufacturer will not be responsible for any injury or property damage arising from improper service or service procedures. If you service this unit, you assume responsibility for any injury or property damage which may result. In addition, in jurisdictions that require one or more licenses to service the equipment specified in this manual, only licensed personnel should service the equipment. Improper installation, adjustment, servicing or repair of the equipment specified in this manual, or attempting to install, adjust, service or repair the equipment specified in this manual without proper training may result in product damage, property damage, personal injury or death.

PROP 65 WARNING
FOR CALIFORNIA CONSUMERS

WARNING

Cancer and Reproductive Harm -
www.P65Warnings.ca.gov

0140M00517-A

As a professional installer you have an obligation to know the product better than the customer. This includes all safety precautions and related items.

Prior to actual installation, thoroughly familiarize yourself with this Instruction Manual. Pay special attention to all safety warnings. Often during installation or repair it is possible to place yourself in a position which is more hazardous than when the unit is in operation.

Remember, it is your responsibility to install the product safely and to know it well enough to be able to instruct a customer in its safe use.

Safety is a matter of common sense...a matter of thinking before acting. Most dealers have a list of specific good safety practices...follow them.

The precautions listed in this Installation Manual are intended as supplemental to existing practices. However, if there is a direct conflict between existing practices and the content of this manual, the precautions listed here take precedence.

Our continuing commitment to quality products may mean a change in specifications without notice.

©2020 DAIKIN MANUFACTURING COMPANY, L.P.
19001 Kermier Rd. Waller, Tx 77484
www.daikincomfort.com

IOD-2025B
06/20

This device, which was assembled by Goodman Manufacturing Company, L.P., contains a component that is classified as an intentional radiator. This intentional radiator has been certified by the FCC: FCC ID QOQBGM111. And this international radiator has an Industry Canada ID: IC 5123A-BGM111.

This device complies with Part 15 of the FCC's Rules. Operation of this device is subject to two conditions:

(1) This device may not cause harmful interference; and
(2) This device must accept any interference received, including interference that may cause undesirable operation.

And this device meets the applicable Industry Canada technical specifications.

The manufacturer of the intentional radiator (model no. BGM111) is Silicon Laboratories Finland Oy, which can be contacted by calling 617-951-0200. (www.silabs.com)

Goodman Manufacturing Company, L.P. may be contacted by calling 713-861-2500, or at 19001 Kermier Rd., Waller TX 77484. (www.goodmanMFG.com)

NOTE: This equipment has been tested and found to comply with the limits for a Class B digital device, pursuant to part 15 of the FCC Rules. These limits are designed to provide reasonable protection against harmful interference in a residential installation. This equipment generates, uses and can radiate radio frequency energy and, if not installed and used in accordance with the instructions, may cause harmful interference to radio communications. However, there is no guarantee that interference will not occur in a particular installation. If this equipment does cause harmful interference to radio or television reception, which can be determined by turning the equipment off and on, the user is encouraged to try to correct the interference by one or more of the following measures:

—Reorient or relocate the receiving antenna.
—Increase the separation between the equipment and receiver.
—Connect the equipment into an outlet on a circuit different from that to which the receiver is connected.
—Consult the dealer or an experienced radio/ TV technician for help.

This equipment complies with FCC radiation exposure limits. To ensure compliance, human proximity to the antenna shall not be less than 20 cm during normal operations.

WARNING

CHANGES OR MODIFICATIONS NOT EXPRESSLY APPROVED BY THE PARTY RESPONSIBLE FOR COMPLIANCE COULD VOID THE USER'S AUTHORITY TO OPERATE THE EQUIPMENT.

CONTENTS

Safety Considerations 3
Product Description 5
Product Application 5
Location Requirements & Considerations 6
combustion & ventilation air requirements 8
Installation Positions 9
Horizontal Applications & Considerations 9
High Altitude Installation 10
Vent/Flue Pipe & Combustion Air Pipe 10
Combustion Air Pipe 13
Condensate Drain Lines & Drain Trap 18
Electrical Connections 21
thermostat requirements 23
Daikin Communicating System 25
Startup Procedure & Adjustment 28
Gas Supply and Piping 29
Circulating air & filters 31
Safety Circuit Description 38
Troubleshooting 39
Maintenance 39
Filters 39
Before Leaving an Installation 39
Repair and Replacement Parts 39
Wiring Diagram 46

SAFETY CONSIDERATIONS

IMPORTANT NOTE: THIS UNIT IS DESIGNED TO MEET THE NOX REQUIREMENT OF 14NG/J MAXIMUM AS REQUIRED BY THE SOUTH COAST AIR QUALITY MANAGEMENT DISTRICT AND THE SAN JOAQUIN VALLEY AIR POLLUTION CONTROL DISTRICT, BOTH IN THE STATE OF CALIFORNIA, AND IS INTENDED FOR INSTALLATION IN THOSE DISTRICTS ONLY.

This unit has a control system that compensates for certain installation and environmental conditions. This unit must:

- Be properly installed, operated, and maintained per the instructions.
- Be serviced only by properly trained service technicians.

Units that are not installed, maintained, or operated properly may result in "noisy" operation during the heating cycle. If this unit is making unusual or objectionable noises during the heating cycle, turn the heat off at the thermostat and contact a qualified service organization right away.

Adhere to the following warnings and cautions when installing, adjusting, altering, servicing, or operating the furnace. To ensure proper installation and operation, thoroughly read this manual for specifics pertaining to the installation and application of this product.

This furnace is manufactured for use with natural gas only.

Install this furnace only in a location and position as specified in **LOCATION REQUIREMENTS & CONSIDERATIONS** section and **INSTALLATION POSITIONS** section of this manual.

Provide adequate combustion and ventilation air to the furnace as specified in **COMBUSTION & VENTILATION AIR REQUIREMENTS** section of this manual.

Combustion products must be discharged to the outdoors. Connect this furnace to an approved vent system only, as specified in **VENT/FLUE PIPE & COMBUSTION AIR PIPE** section of this manual.

Never test for gas leaks with an open flame. Use a commercially available soap solution made specifically for the detection of leaks to check all connections, as specified in **GAS SUPPLY AND PIPING** section of this manual.

Always install a furnace to operate within the furnace's intended temperature-rise range with a duct system which has external static pressure within the allowable range, as specified on the furnace rating plate and Operational Checks section of these instructions.

When a furnace is installed so that supply ducts carry air circulated by the furnace to areas outside the space containing the furnace, the return air shall also be handled by duct(s) sealed to the furnace casing and terminating outside the space containing the furnace.

A gas-fired furnace for installation in a residential garage must be installed as specified in the **LOCATION REQUIREMENTS AND CONSIDERATIONS** section of this manual.

This furnace cannot be used as a construction site heater.

CAUTION

FROZEN AND BURST WATER PIPE HAZARD
FAILURE TO PROTECT AGAINST THE RISK OF FREEZING MAY RESULT IN PROPERTY DAMAGE.
SPECIAL PRECAUTIONS MUST BE MADE IF INSTALLING FURNACE IN AN AREA WHICH MAY DROP BELOW FREEZING. THIS CAN CAUSE IMPROPER OPERATION OR DAMAGE TO EQUIPMENT. IF THE FURNACE ENVIRONMENT HAS THE POTENTIAL OF FREEZING, THE DRAIN TRAP AND DRAIN LINE MUST BE PROTECTED. THE USE OF ACCESSORY DRAIN TRAP HEATERS, ELECTRIC HEAT TAPE AND/OR RV ANTIFREEZE IS RECOMMENDED FOR THESE INSTALLATIONS.

WARNING

TO PREVENT PERSONAL INJURY OR DEATH DUE TO IMPROPER INSTALLATION, ADJUSTMENT, ALTERATION, SERVICE OR MAINTENANCE, REFER TO THIS MANUAL. FOR ADDITIONAL ASSISTANCE OR INFORMATION, CONSULT A QUALIFIED INSTALLER, SERVICER AGENCY OR THE GAS SUPPLIER.

WARNING

IF THE INFORMATION IN THESE INSTRUCTIONS IS NOT FOLLOWED EXACTLY, A FIRE OR EXPLOSION MAY RESULT CAUSING PROPERTY DAMAGE, PERSONAL INJURY OR LOSS OF LIFE.
- DO NOT STORE OR USE GASOLINE OR OTHER FLAMMABLE VAPORS AND LIQUIDS IN THE VICINITY OF THIS OR ANY OTHER APPLIANCE.
- WHAT TO DO IF YOU SMELL GAS:
- **DO NOT TRY TO LIGHT ANY APPLIANCE.**
- **DO NOT TOUCH ANY ELECTRICAL SWITCH; DO NOT USE ANY PHONE IN YOUR BUILDING.**
- **IMMEDIATELY CALL YOUR GAS SUPPLIER FROM A NEIGHBOR'S PHONE. FOLLOW THE GAS SUPPLIER'S INSTRUCTIONS. IF YOU CANNOT REACH YOUR GAS SUPPLIER, CALL THE FIRE DEPARTMENT.**

- INSTALLATION AND SERVICE MUST BE PERFORMED BY A QUALIFIED INSTALLER, SERVICE AGENCY OR THE GAS SUPPLIER.

WARNING

HEATING UNIT SHOULD NOT BE UTILIZED WITHOUT REASONABLE, ROUTINE, INSPECTION, MAINTENANCE AND SUPERVISION. IF THE BUILDING IN WHICH ANY SUCH DEVICE IS LOCATED WILL BE VACANT, CARE SHOULD BE TAKEN THAT SUCH DEVICE IS ROUTINELY INSPECTED, MAINTAINED AND MONITORED. IN THE EVENT THAT THE BUILDING MAYBE EXPOSED TO FREEZING TEMPERATURES AND WILL BE VACANT, ALL WATER-BEARING PIPES SHOULD BE DRAINED, THE BUILDING SHOULD BE PROPERLY WINTERIZED, AND THE WATER SOURCE CLOSED. IN THE EVENT THAT THE BUILDING MAY BE EXPOSED TO FREEZING TEMPERATURES AND WILL BE VACANT, ANY HYDRONIC COIL UNITS SHOULD BE DRAINED AS WELL AND, IN SUCH CASE, ALTERNATIVE HEAT SOURCES SHOULD BE UTILIZED.

WARNING

POSSIBLE PROPERTY DAMAGE, PERSONAL INJURY OR DEATH DUE TO FIRE, EXPLOSION, SMOKE, SOOT, CONDENSATION, ELECTRICAL SHOCK OR CARBON MONOXIDE MAY RESULT FROM IMPROPER INSTALLATION, REPAIR OPERATION, OR MAINTENANCE OF THIS PRODUCT.

WARNING

SHOULD OVERHEATING OCCUR OR THE GAS SUPPLY FAIL TO SHUT OFF, TURN OFF THE MANUAL GAS SHUTOFF VALVE EXTERNAL TO THE FURNACE BEFORE TURNING OFF THE ELECTRICAL SUPPLY.

DANGER
PELIGRO

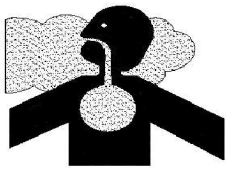

CARBON MONOXIDE POISONING HAZARD

Special Warning for Installation of Furnace or Air Handling Units in Enclosed Areas such as Garages, Utility Rooms or Parking Areas

Carbon monoxide producing devices (such as an automobile, space heater, gas water heater, etc.) should not be operated in enclosed areas such as unventilated garages, utility rooms or parking areas because of the danger of carbon monoxide (CO) poisoning resulting from the exhaust emissions. If a furnace or air handler is installed in an enclosed area such as a garage, utility room or parking area and a carbon monoxide producing device is operated therein, there must be adequate, direct outside ventilation.

This ventilation is necessary to avoid the danger of CO poisoning which can occur if a carbon monoxide producing device continues to operate in the enclosed area. Carbon monoxide emissions can be (re)circulated throughout the structure if the furnace or air handler is operating in any mode.

CO can cause serious illness including permanent brain damage or death. B10259-216

RIESGO DE INTOXICACIÓN POR MONÓXIDO DE CARBONO

Advertencia especial para la instalación de calentadores ó manejadoras de aire en áreas cerradas como estacionamientos ó cuartos de servicio.

Los equipos ó aparatos que producen monóxido de carbono (tal como automóvil, calentador de gas, calentador de agua por medio de gas, etc) no deben ser operados en áreas cerradas debido al riesgo de envenenamiento por monóxido de carbono (CO) que resulta de las emisiones de gases de combustión. Si el equipo ó aparato se opera en dichas áreas, debe existir una adecuada ventilación directa al exterior.

Esta ventilación es necesaria para evitar el peligro de envenenamiento por CO, que puede ocurrir si un dispositivo que produce monóxido de carbono sigue operando en el lugar cerrado.

Las emisiones de monóxido de carbono pueden circular a través del aparato cuando se opera en cualquier modo.

El monóxido de carbono puede causar enfermedades severas como daño cerebral permanente ó muerte. B10259-216

RISQUE D'EMPOISONNEMENT AU MONOXYDE DE CARBONE

Avertissement special au sujet de l'installation d'appareils de chauffage ou de traitement d'air dans des endroits clos, tets les garages, les locaux d'entretien et les stationnements.

Evitez de mettre en marche les appareils produisant du monoxyde de carbone (tels que les automobile, les appareils de chauffage autonome,etc.) dans des endroits non ventilés tels que les d'empoisonnement au monoxyde de carbone. Si vous devez faire fonctionner ces appareils dans un endroit clos, assures-vous qu'il y ait une ventilation directe provenant de l'exterier.

Cette ventilation est nécessaire pour éviter le danger d'intoxication au CO pouvant survenir si un appareil produisant du monoxyde de carbone continue de fonctionner au sein de la zone confinée.

Les émissions de monoxyde de carbone peuvent etre recircules dans les endroits clos, si l'appareil de chauffage ou de traitement d'air sont en marche.

Le monoxyde de carbone peut causer des maladies graves telles que des dommages permanents au cerveau et meme la mort. B10259-216

Shipping Inspection

All units are securely packed in shipping containers tested according to International Safe Transit Association specifications. The carton must be checked upon arrival for external damage. If damage is found, a request for inspection by carrier's agent must be made in writing immediately.

The furnace must be carefully inspected on arrival for damage and bolts or screws which may have come loose in transit. In the event of damage the consignee should:

1. Make a notation on delivery receipt of any visible damage to shipment or container.
2. Notify carrier promptly and request an inspection.
3. With concealed damage, carrier must be notified as soon as possible - preferably within five days.
4. File the claim with the following support documents within a nine month statute of limitations.
   - Original or certified copy of the Bill of Lading, or indemnity bond.
   - Original paid freight bill or indemnity in lieu thereof.
   - Original or certified copy of the invoice, showing trade and other discounts or reductions.
   - Copy of the inspection report issued by carrier's representative at the time damage is reported to carrier.

The carrier is responsible for making prompt inspection of damage and for a thorough investigation of each claim. The distributor or manufacturer will not accept claims from dealers for transportation damage.

Electrostatic Discharge (ESD) Precautions

NOTE: Discharge your body's static electricity before touching unit. An electrostatic discharge can adversely affect electrical components.

Use the following precautions during furnace installation and servicing to protect the integrated control module from damage. By putting the furnace, the control, and the person at the same electrostatic potential, these steps will help avoid exposing the integrated control module to electrostatic discharge. This procedure is applicable to both installed and non-installed (ungrounded) furnaces.

1. Disconnect all power to the furnace. Do not touch the integrated control module or any wire connected to the control prior to discharging your body's electrostatic charge to ground.
2. Firmly touch a clean, unpainted, metal surface of the furnaces near the control. Any tools held in a person's hand during grounding will be discharged.
3. Service integrated control module or connecting wiring following the discharge process in step 2. Use caution not to recharge your body with static electricity; (i.e., do not move or shuffle your feet, do not touch ungrounded objects, etc.). If you come in contact with an ungrounded object, repeat step 2 before touching control or wires.
4. Discharge your body to ground before removing a new control from its container. Follow steps 1 through 3 if installing the control on a furnace. Return any old or new controls to their containers before touching any ungrounded object.

To The Installer

Before installing this unit, please read this manual thoroughly to familiarize yourself with specific items which must be adhered to, including but not limited to: unit maximum external static pressure, gas pressures, BTU input rating, proper electrical connections, circulating air temperature rise, minimum or maximum CFM, and motor speed connections.

WARNING

To prevent property damage, personal injury or death due to fire, do not install this furnace in a mobile home, trailer, or recreational vehicle.

PRODUCT DESCRIPTION

Features

This furnace is a part of the Daikin Communicating family of products. The Daikin Communicating system provides advanced airflow configuration, enhanced setup features, and enhanced diagnostics. It also reduces the number of thermostat wires to a maximum of four. It may be also installed as part of a non-communicating system using a standard 24 VAC thermostat.

PRODUCT APPLICATION

This furnace is primarily designed for residential home-heating applications. It is not designed or certified for use in mobile homes, trailers or recreational vehicles. Neither is it designed or certified for outdoor applications. The furnace must be installed indoors (i.e., attic space, crawl space, or garage area provided the garage area is enclosed with an operating door).

This furnace can be used in the following non-industrial commercial applications:

Schools, Office buildings, Churches, Retail stores, Nursing homes, Hotels/motels, Common or office areas.

In such applications, the furnace must be installed with the following stipulations:

- It must be installed per the installation instructions provided and per local and national codes.
- It must be installed indoors in a building constructed on site.
- It must be part of a ducted system and not used in a free air delivery application.
- It must not be used as a "make-up" air unit.

- It must be installed as a two-pipe systems for combustion air.
- All other warranty exclusions and restrictions apply This furnace is an ETL certified appliance and is appropriate for use with natural gas.
- Dual certification means that the combustion air inlet pipe is optional and the furnace can be vented as a:
- Non-direct vent (single pipe) central forced air furnace in which combustion air is taken from the installation area or from air ducted from the outside or,
- Direct vent (dual pipe) central forced air furnace in which all combustion air supplied directly to the furnace burners through a special air intake system outlined in these instructions.

NOTE: Meeting the following conditions is a requirement when using this furnace as a construction site heater:

- The furnace has a permanently installed venting system per these installation instructions.
- A room thermostat is used to control the furnace. Fixed jumpers that provide continuous heating CANNOT be used and can cause long term equipment damage. Bi-metal thermostats or any thermostat affected by vibration must be avoided during construction.
- The furnace is attached to permanent return air ducting sealed to the furnace.
- A return air temperature range between 60ºF (16ºC) and 80ºF (27ºC) is maintained.
- MERV 11 pleated minimum 4.0” thick (Example P/N AMP-11-2025-45) air filter(s) are installed in the system and inspected daily and replaced as needed during construction and upon completion of construction.
- The input rate and temperature rise settings are within furnace rating plate guidelines.
- The furnace must be installed as a two-pipe system, using 100% outside air for combustion during construction.
- The furnace heat exchanger, components, duct system, air filters, and evaporator coils are thoroughly cleaned following final construction clean up by a qualified person.
- All furnace operating conditions, including ignition, input rate, temperature rise, and venting, are verified by a qualified person according to these installation instructions.
- Furnace doors must be in place on the furnace while the furnace is operating in any mode.

NOTE: Damage or repairs due to failure to comply with these requirements may void the manufacturer’s warranty.

To ensure proper furnace operation, install, operate and maintain the furnace in accordance with these installation and operation instructions, all local building codes and ordinances. In their absence, follow the latest edition of the National Fuel Gas Code (NFPA 54/ANSI Z223.1), Installation Codes, local plumbing or waste water codes, and other applicable codes.

A copy of the National Fuel Gas Code (NFPA 54/ANSI Z223.1) can be obtained from any of the following:

American National Standards Institute
25 West 43rd Street, 4th Floor
New York, NY 10036

National Fire Protection Association
1 Batterymarch Park
Quincy, MA 02169-7471
CSA International
8501 East Pleasant Valley Road
Independence, OH 44131-5516

The rated heating capacity of the furnace should be greater than or equal to the total heat loss of the area to be heated. The total heat loss should be calculated by an approved method or in accordance with “ASHRAE Guide” or “Manual J-Load Calculations” published by the Air Conditioning Contractors of America.

LOCATION REQUIREMENTS & CONSIDERATIONS

WARNING

To prevent possible equipment damage, property damage, personal injury or death, the following bullet points must be observed when installing this unit.

WARNING

Possible property damage, personal injury or death due to fire, explosion, smoke, soot, condensation, electrical shock or carbon monoxide may result from improper installation, repair operation, or maintenance of this product.

Follow the instructions listed below and the guidelines provided in the *Combustion and Ventilation Air Requirements* section when selecting a furnace location.

- Centrally locate the furnace with respect to the proposed or existing air distribution system.
- Ensure the temperature of the return air entering the furnace is between 55°F and 100°F when the furnace is heating.
- Provide provisions for venting combustion products outdoors through a proper venting system. Special consideration should be given to vent/flue pipe routing and combustion air intake pipe when applicable. Refer to Vent/Flue Pipe and Combustion Air Pipe

-Termination Locations for appropriate termination locations and to determine if the piping system from furnace to termination can be accomplished within the guidelines given. NOTE: The length of flue and/or combustion air piping can be a limiting factor in the location of the furnace.

- Locate the furnace so condensate flows downwards to the drain. Do not locate the furnace or its condensate drainage system in any area subject to below freezing temperatures without proper freeze protection. Refer to Condensate Drain Lines and Trap for further details.
- Ensure adequate combustion air is available for the furnace. Improper or insufficient combustion air can expose building occupants to gas combustion products that could include carbon monoxide. Refer to Combustion and Ventilation Air Requirements.
- Set the furnace on a level floor to enable proper condensate drainage. If the floor becomes wet or damp at times, place the furnace above the floor on a concrete base sized approximately 1-1/2" larger than the base of the furnace. Refer to the Horizontal Applications and Considerations for leveling of horizontal furnaces.
- Ensure upflow or horizontal furnaces are not installed directly on carpeting, or any other combustible material. The only combustible material allowed is wood.
- Exposure to contaminated combustion air will result in safety and performance-related problems. Do not install the furnace where the combustion air is exposed to the following substances:
    - Permanent wave solutions
    - Chlorinated waxes or cleaners
    - Chlorine-based swimming pool chemicals
    - Carbon tetrachloride
    - Water softening chemicals
    - Swimming pool chemicals
    - Deicing salts or chemicals
    - Halogen type refrigerants
    - Printing inks
    - Cleaning solutions (such as perchloroethylene)
    - Paint removers
    - Varnishes
    - Hydrochloric acid
    - Cements and glues
    - Antistatic fabric softeners for clothes dryers
    - Masonry acid washing materials
- Protect a *non-direct vent* furnace from airborne contaminants. To ensure that the enclosed non-direct vent furnace has an adequate supply of combustion air, vent from a nearby uncontaminated room or from outdoors. Refer to the Combustion and Ventilation Air Requirements for details.
- If the furnace is used in connection with a cooling coil unit, install the furnace upstream or in parallel with the cooling coil unit. Premature heat exchanger failure will result if the cooling unit is placed ahead of the furnace.

For vertical (upflow) applications, the minimum cooling coil width shall not be less than furnace width minus 1". Additionally, a coil installed above an upflow furnace may be the same width as the furnace or may be one size larger than the furnace. Example: a "C" width coil may be installed with a "B" width furnace.

For upflow applications, the front of the coil and furnace must face the same direction.

- If the furnace is installed in a residential garage, position the furnace so that the burners and ignition source are located not less than 18" above the floor. Protect the furnace from physical damage by vehicles.
- If the furnace is installed horizontally, ensure the access doors are not on the "up/top" or "down/bottom" side of the furnace.
- Do not connect this furnace to a chimney flue that serves a separate appliance designed to burn solid fuel.

Clearances and Accessibility

NOTES:

- For servicing or cleaning, a 24" front clearance is required.
- Unit connections (electrical, flue and drain) may necessitate greater clearances than the minimum clearances listed above.
- In all cases, accessibility clearance must take precedence over clearances from the enclosure where accessibility clearances are greater.

DM96SC MINIMUM CLEARANCES TO COMBUSTIBLE MATERIALS (INCHES)						
POSITION*	SIDES	REAR	FRONT	BOTTOM	FLUE	TOP
Upflow	0"	0"	3"	C	0"	1"
Horizontal	6"	0"	3"	C	0"	6"

C = If placed on combustible floor, floor MUST be wood only.

Table 1

Installations must adhere to the clearances to combustible materials to which this furnace has been design certified. The minimum clearance information for this furnace is provided on the unit's clearance label. These clearances must be permanently maintained. Clearances must also accommodate an installation's gas, electrical, and drain trap and drain line connections. If the alternate combustion air intake or vent/flue connections are used additional clearance must be provided to accommodate these connections. Refer to Vent/Flue Pipe and Combustion Air Pipe for details.

NOTE: In addition to the required clearances to combustible materials, a minimum of 24" service clearance must be available in front of the unit.

A furnace installed in a confined space (i.e., a closet or utility room) must have two ventilation openings with a total minimum free area of 0.25 square inches per 1,000 BTU/hr of furnace input rating. Refer to Specification Sheet applicable to your model for minimum clearances to combustible surfaces. One of the ventilation openings must be within 12" of the top; the other opening must be within 12" of the bottom of the confined space. In a typical construction, the clearance between the door and door frame is usually adequate to satisfy this ventilation requirement.

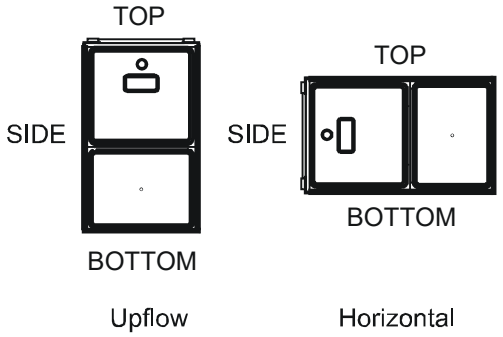

Figure 1

Existing Furnace Removal

The following vent testing procedure is reproduced from the **American National Standard/National Standard of Canada for Gas-Fired Central Furnaces ANSI Z21.47, CSA-2.3 latest edition Section 1.23.1.**

The following steps shall be followed with each appliance connected to the venting system placed in operation, while any other appliances connected to the venting system are not in operation:

1. Seal any unused openings in the venting system.
2. Inspect the venting system for proper size and horizontal pitch, as required by the National Fuel Gas Code, ANSI Z223.1 instructions. Determine that there is no blockage or restriction, leakage, corrosion and other deficiencies which could cause an unsafe condition.
3. As far as practical, close all building doors and windows and all doors between the space in which the appliance(s) connected to the venting system are located and other spaces of the building.
4. Close fireplace dampers.
5. Turn on clothes dryers and any appliance not connected to the venting system. Turn on any exhaust fans, such as range hoods and bathroom exhausts, so they shall operate at maximum speed. Do not operate a summer exhaust fan.
6. Follow the lighting instructions. Place the appliance being inspected in operation. Adjust thermostat so appliance shall operate continuously.
7. If improper venting is observed during any of the above tests, the venting system must be corrected in accordance with the National Fuel Gas Code ANSI Z223.1/NFPA 54.
8. After it has been determined that each appliance connected to the venting system properly vents when tested as outlined above, return doors, windows, exhaust fans, fireplace dampers and any other gas burning appliance to their previous conditions of use.

If resizing is required on any portion of the venting system, use the appropriate table in Appendix G in the latest edition of the National Fuel Gas Code ANSI Z223.1 Installation Codes.

Thermostat Location

The thermostat should be placed approximately five feet from the floor on a vibration-free, inside wall in an area having good air circulation. Do not install the thermostat where it may be influenced by any of the following:

- Drafts, or dead spots behind doors, in corners, or under cabinets.
- Hot or cold air from registers.
- Radiant heat from the sun.
- Light fixtures or other appliances.
- Radiant heat from a fireplace.
- Concealed hot or cold water pipes, or chimneys.
- Unconditioned areas behind the thermostat, such as an outside wall.

Consult the instructions packaged with the thermostat for mounting instructions and further precautions.

COMBUSTION & VENTILATION AIR REQUIREMENTS

WARNING

To avoid property damage, personal injury or death, sufficient fresh air for proper combustion and ventilation of flue gases must be supplied. Most homes require outside air be supplied into the furnace area.

Improved construction and additional insulation in buildings have reduced heat loss by reducing air infiltration and escape around doors and windows. These changes have helped in reducing heating/cooling costs but have created a problem supplying combustion and ventilation air for gas fired and other fuel burning appliances. Appliances that pull air out of the house (clothes dryers, exhaust fans, fireplaces, etc.) increase the problem by starving appliances for air.

House depressurization can cause back drafting or improper combustion of gas-fired appliances, thereby exposing building occupants to gas combustion products that could include carbon monoxide.

If this furnace is to be installed in the same space with other gas appliances, such as a water heater, ensure there is an adequate supply of combustion and ventilation air for all appliances. Refer to the latest edition of the National Fuel Gas Code NFPA 54/ANSI Z223.1 or applicable provisions of the local building codes for determining the combustion air requirements for the appliances.

Most homes will require outside air be supplied to the furnace area by means of ventilation grilles or ducts connecting directly to the outdoors or spaces open to the outdoors such as attics or crawl spaces.

INSTALLATION POSITIONS

This furnace may be installed in an upright position or horizontal on either the left or right side panel. Do not install this furnace on its back. For vertical installations, return air ductwork may be attached to the side panel(s) and/or basepan. For horizontal installations, return air ductwork must be attached to the basepan. **NOTE:** Ductwork must never be attached to the back of the furnace. Refer to "Recommended Installation Positions" figure for appropriate installation positions, ductwork connections, and resulting airflow arrangements.

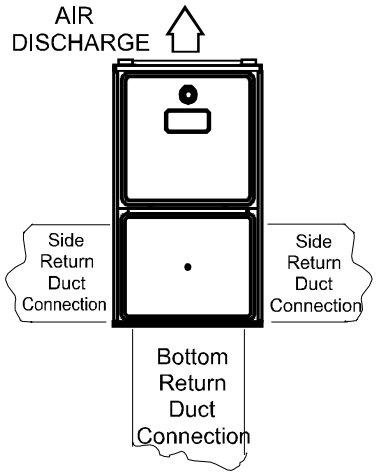

UPFLOW UPRIGHT

Alternate Vent/Flue Location

Figure 2A

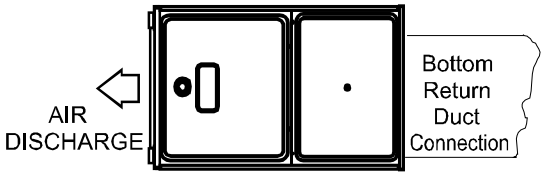

UPFLOW HORIZONTAL LEFT AIR DISCHARGE

Figure 2B

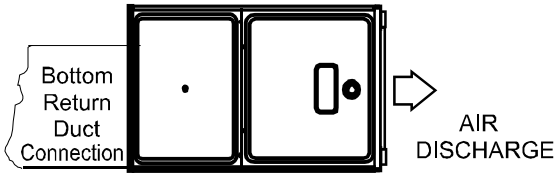

UPFLOW HORIZONTAL RIGHT AIR DISCHARGE

Figure 2C

Recommended Installation Positions

HORIZONTAL APPLICATIONS & CONSIDERATIONS

When installing a furnace horizontally, additional consideration must be given to the following:

Furnace Suspension

If suspending the furnace from rafters or joists, use 3/8" threaded rod and 2"x2"x1/8" angle iron as shown in the following diagram. The length of rod will depend on the application and the clearances necessary.

If the furnace is installed in a crawl space it must be suspended from the floor joist or supported by a concrete pad. Never install the furnace on the ground or allow it to be exposed to water.

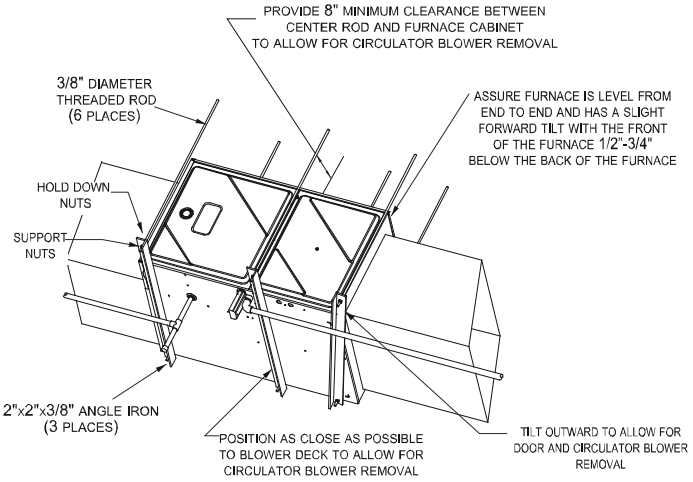

Figure 3

Front Cover Pressure Switch Tube Location

When a furnace is installed horizontally with left side down, the front cover pressure switch tube must be re-located to the lower port of the collector box cover.

1. Remove tube from front cover pressure switch and collector box cover.
2. Remove rubber plug from bottom collector box port and install on top collector box port.
3. Locate 24" x 1/4" tube in bag assembly.
4. Install one end on front cover pressure switch.

5. Route tube to lower port on collector box cover and cut off excess tubing.

Drain Trap and Lines

In horizontal applications the condensate drain trap is secured to the furnace side panel, suspending it below the furnace. A minimum clearance of 5.5” below the furnace must be provided for the drain trap. Additionally, the appropriate downward piping slope must be maintained from the drain trap to the drain location. Refer to Condensate Drain Trap and Lines for further details. If the drain trap and drain line will be exposed to temperatures near or below freezing, adequate measures must be taken to prevent condensate from freezing.

Leveling

Leveling ensures proper condensate drainage from the heat exchanger. For proper flue pipe drainage, the furnace must be level lengthwise from end to end. The furnace should have a slight tilt from back to front with the access doors downhill from the back panel approximately 1/2” to 3/4”. The slight tilt allows the heat exchanger condensate, generated in the recuperator coil, to flow forward to the recuperator coil frontcover.

Alternate Electrical and Gas Line Connections

This furnace has provisions allowing for electrical and gas line connections through either side panel. In horizontal applications the connections can be made either through the “top” or “bottom” of the furnace.

Drain Pan

A drain pan must be provided if the furnace is installed above a conditioned area. The drain pan must cover the entire area under the furnace (and air conditioning coil if applicable).

Freeze Protection

Refer to Horizontal Applications and Conditions - Drain Trap and Lines.

HIGH ALTITUDE INSTALLATION

The furnace, as shipped, requires no change to run between 0-4500 feet. At all altitudes, the air temperature rise must be within the range listed on the Specification Sheet applicable to your model for the fuel used. All installations above 4,500 feet require manifold pressure adjustments and combustion analysis. Refer to the “Gas Supply Pressure Measurement” section for instruction on how to accurately measure and adjust manifold “outlet” pressure. The furnace should operate for a minimum of 15 minutes before taking a combustion sample. Combustion samples should be taken from beyond the furnace exhaust and must be within provided CO2% range. See table “2” for recommended manifold pressure adjustments and proper CO2% range. Gas heating values can vary; further pressure adjustment may be necessary to ensure furnace operates within acceptable CO2 range.

96% Model	Manifold Pressure at 5000 ft	Manifold Pressure at 7500 ft	CO2% Natural Gas	Max Allowable Venting (3 in only)
DM96SC0603BU	2.5" w.c.	2.4" w.c.	6.5 - 8.5	100 ft
DM96SC0805CU				80 ft

Table 2

Vent Pipe & Combustion Air Pipe

This manual will refer to the pipe that discharges products of combustion to the outdoors as the “vent” pipe or “flue” pipe. The pipe that supplies air for combustion to the furnace will be referred to as the “intake” pipe or “combustion air” pipe.

This furnace is dual certified and may be installed as a non-direct vent (single pipe) or direct vent (dual pipe) appliance.

WARNING

Upon completion of the furnace installation, carefully inspect the entire flue system both inside and outside of the furnace to assure it is properly sealed. Leaks in the flue system can result in serious personal injury or death due to exposure to flue products, including carbon monoxide.

WARNING

Upon completion of the furnace installation, carefully inspect the entire flue system both inside and outside of the furnace to assure it is properly sealed. Leaks in the flue system can result in serious personal injury or death due to exposure to flue products, including carbon monoxide.

WARNING

Failure to follow these instructions can result in bodily injury or death. Carefully read and follow all instructions given in this section.

WARNING

To avoid bodily injury, fire or explosion, solvent cements must be kept away from all ignition sources (i.e., sparks, open flames, and excessive heat) as they are combustible liquids. Avoid breathing cement vapors or contact with skin and/or eyes.

Materials

PVC, CPVC, or ABS pipe & fittings are typically used as venting and intake pipe materials. All 90° elbows must be medium or long radius types. A medium radius elbow should measure ~3-1/16” minimum from the plane of one opening to the center line of the other opening for 2” diameter pipe, and ~4-9/16” minimum for 3” pipe.

In addition to these materials, Innoflue® by Centrotherm Eco Systems and PolyPro® by M&G Duravent are also approved vent and combustion air materials for installations in the U.S.A. Manufacturers Installation instructions for these products must be followed. These products have specific instructions for installing, joining and terminating. Do not mix materials or components of one manufacturer with materials or components of another manufacturer. Refer to the following chart for plastic pipe & fittings specifications

VENTING MATERIAL REQUIREMENTS	
PVC	**ASTM STANDARD**
SCHEDULE 40 PIPE	D1785
SCHEDULE 40 CELLULAR CORE PIPE	F891
SDR 21 OR 26 PIPE	D2241
FITTINGS	D2466
ABS	
SCHEDULE 40 PIPE	D1527
SCHEDULE 40 CELLULAR CORE PIPE	F628
FITTINGS	D2468
CPVC	
SCHEDULE 40 PIPE	F441
SDR 21 OR 26 PIPE	F442
FITTINGS	F438
POLYPROPYLENE	
INNOFLUE® (CENTROTHERM)	
POLYPRO® (DURAVENT)	
PRIMER & SOLVENT CEMENT	
PVC PRIMER	F656
CPVC PRIMER	F656
PVC SOLVENT CEMENT	D2564
CPVC SOLVENT CEMENT	F493
ABS SOLVENT CEMENT	D2235
ABS / PVC / CPVC ALL PURPOSE CEMENT (FOR PIPE & FITTINGS OF THE SAME MATERIAL)	D2564, D2235, F493
TRANSITION CEMENT FOR ABS TO PVC or CPVC	D3188
INSTALLATIONS IN CANADA	
PVC & CPVC PIPE & FITTINGS	ULC S636
PVC & CPVC SOLVENT CEMENT	
TRANSITION CEMENT	
INNOFLUE® (CENTROTHERM)	
POLYPRO® (DURAVENT)	

TABLE 3

Installation

This furnace is manufactured with 2” CPVC vent & intake couplings. Use transition cement to connect PVC or ABS pipe to these fittings. For furnaces requiring installation of 3” pipe, the transition from 2” to 3” should be made as close to the furnace as possible, and only when the piping is sloped enough to prevent condensation from collecting.

This furnace must not be connected to Type B, BW, or L vent or vent connector, and must not be vented into masonry chimney. A masonry chimney may be used as a chase or passage way for approved venting materials providing the masonry chimney is not also being used to vent products of combustion. Never common vent this appliance with another appliance. Never use a vent which is used by a solid fuel appliance.

Piping may run vertically or horizontally and must be adequately supported to prevent strain on joints, sagging, separation, and detachment from the furnace. Horizontal runs of piping must be supported every three to five feet. Condensation within the furnace secondary heat exchanger and in the vent pipe is a normal occurrence. Vent pipe must be installed to maintain a minimum 1/4 inch per foot downward slope toward the furnace to return condensate to the furnace’s drain system. Condensation may also occur in the intake pipe. This commonly takes place during the summer months when humid air enters an intake pipe that runs through a cool basement or other conditioned space. Refer to intake pipe options for using the RF000142 kit and managing condensation.

WARNING

To avoid bodily injury, fire or explosion, solvent cements must be kept away from all ignition sources (i.e., sparks, open flames, and excessive heat) as they are combustible liquids. Avoid breathing cement vapors or contact with skin and/or eyes.

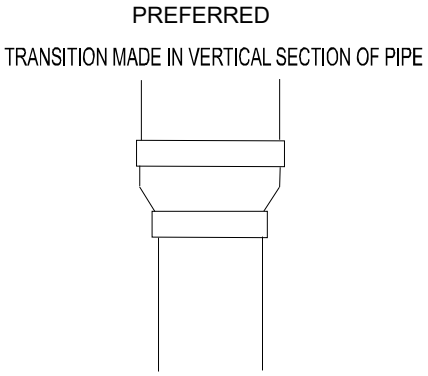

Figure 4

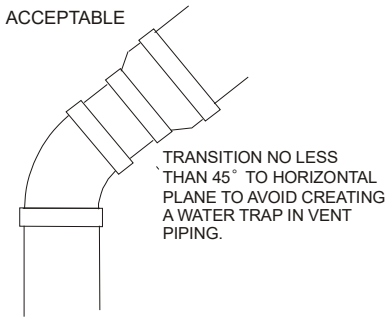

Figure 5

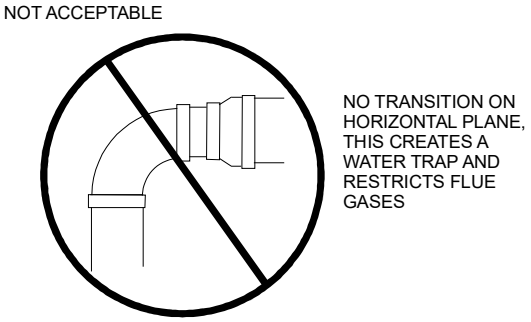

Figure 6

Precautions must be taken to prevent condensate from freezing inside the vent pipe. All vent piping exposed to freezing temperatures must be insulated with 1/2" thick closed cell foam. Inspect piping for leaks prior to installing insulation.

Pipe Sizing

Consult table 4 to determine what diameter piping is required for your installation. Lengths shown in table 4 apply to single pipe & two pipe installations. In a two pipe installation do not add intake and vent pipe lengths together. Both pipes would normally be equal in length, if different, then the longest pipe must be within the limits of table 4. It is preferable to up-size from 2" to 2.5" or 3" pipe if the pipe length & elbow count are near maximum. This will help avoid nuisance pressure switch opening caused by prevailing winds & sudden changes in atmospheric pressure.

0 - 4,999 FT ALTITUDE

MODEL	Pipe Size (in)	Number of Elbows							
		1	2	3	4	5	6	7	8
DM96SC0603BU	2	90	85	80	75	70	65	60	55
	3	158	151	144	137	130	123	116	109
DM96SC0805CU	2	55	50	45	40	35	30	25	20
	3	151	144	137	130	123	116	109	102

5,000 - 7,500 FT ALTITUDE

MODEL	Pipe Size (in)	Number of Elbows							
		1	2	3	4	5	6	7	8
DM96SC0603BU	3	100	93	87	81	75	69	63	57
DM96SC0805CU	3	80	73	67	61	55	49	43	37

TABLE 4

Vent Pipe Connection

The vent pipe outlet is sized to accept 2" pipe. Secure vent pipe directly into the furnace fitting with the appropriate glue. Alternately, a small section of 2" pipe may be glued in the furnace socket and a rubber coupling installed to allow removal for future service. Piping should be routed in a manner to avoid contact with refrigerant lines, metering devices, condensate drain lines, etc. If necessary, clearances may be increased by creating an offset using two 45° elbows (Figure 7).

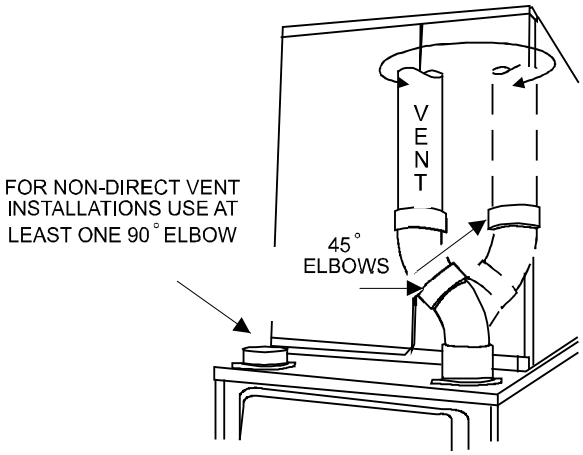

Increased Clearance Configuration

Figure 7

WARNING

Edges of sheet metal holes may be sharp. Use gloves as a precaution when removing hole plugs.

Combustion Air Pipe Connection

If the furnace is being installed without a combustion air pipe, a 90° elbow should be used on the combustion air intake to guard against blockage.

On up flow / horizontal models, secure the combustion air intake pipe to the air intake coupling using a rubber coupling supplied with the furnace. The rubber coupling may be omitted by inverting the intake coupling and gluing pipe directly to it. Piping may also be glued to the intake coupling in its original position by using a plastic coupling.

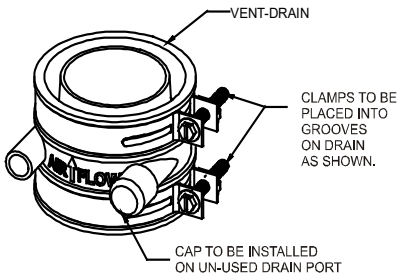

Figure 8

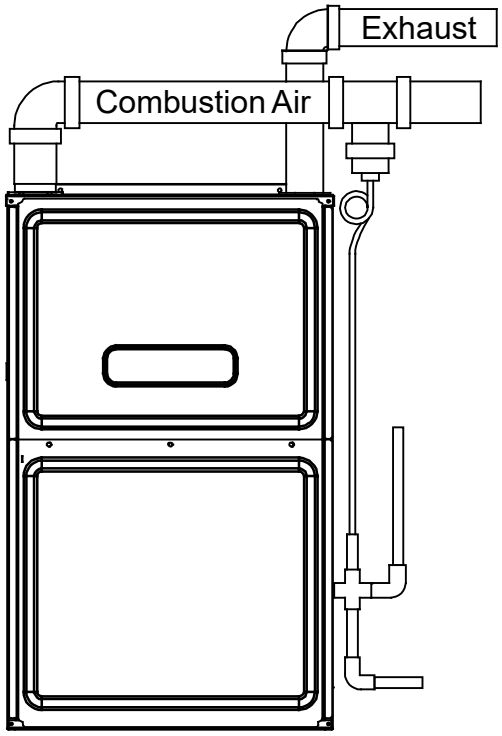

Figure 9

COMBUSTION AIR INTAKE OPTIONS: The RF000142 coupling (Figure 8) can be secured directly to the furnace intake coupling if condensation/rain water is a concern. If the RF000142 is used on the combustion air inlet, it must be installed with the arrow pointing up. It should be noted, the combustion air will actually be moving in a direction opposite of the arrow on the RF000142 coupling. It must have a field supplied, trapped drain tube free-draining to a proper condensate disposal location. A loop in the drain tube can serve as a trap. The unused RF000142 drain fitting must be capped. A field supplied tee installed in the intake pipe is also an acceptable method of catching condensation. It must have a field supplied, trapped drain tube or pipe, free-draining to a proper condensate disposal location. A loop in the drain tube can serve as a trap.

Alternate Vent & Intake Pipe Connections

(Up flow/Horizontal models only)

When installing a furnace horizontally with the left side down, alternate flue and combustion air pipe connections may be used. This method allows the flue and combustion air piping to be run vertically through the side of the furnace (facing up in horizontal left). The alternate vent location is the 3” hole directly in line with the induced draft blower outlet.
When using the horizontal alternate vent configuration, you must use the RF000142 vent drain kit. See Figures 10 & 11 & follow steps below.

NOTE: In the horizontal left installation position, a means of condensate collection must be provided to keep vent pipe condensate from entering the draft inducer housing. If the vent drain elbow is eliminated from the installation, the RF000142 kit must be used.

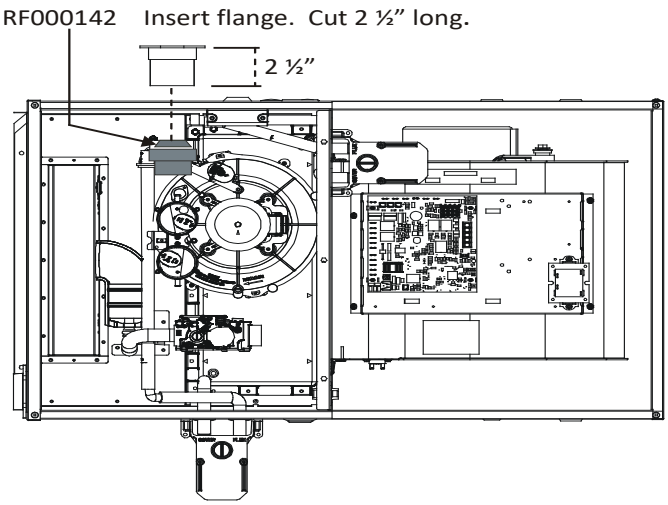

Figure 10

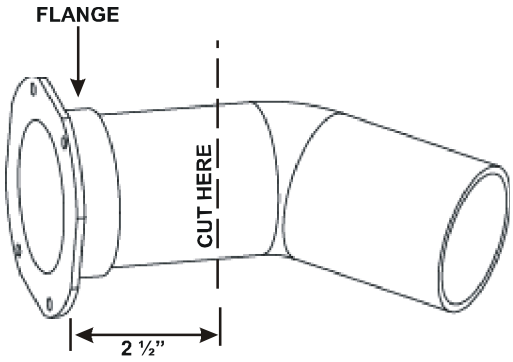

Vent/Flue Pipe Cuts

Figure 11

WARNING

The rubber elbow is not designed to support a load. When the rubber elbow is mounted externally to the furnace cabinet, extreme care must be taken to adequately support field-supplied vent/flue piping, as damage can result in leaks causing bodily injury or death due to exposure to flue gases, including carbon monoxide

CAUTION

Be sure not to damage internal wiring or other components when reinstalling coupling and screws.

1. Remove the four screws from the vent pipe flange on top the furnace.
2. Remove the internal elbow, vent pipe and gasket.
3. Cut the internal vent pipe 2 1/2” from the flange. Discard the un-flanged section.
4. Remove the 3” plastic plug (in line with the inducer outlet) and insert it in the space vacated by removal of the internal vent pipe.
5. Install the RF000142 drain coupling with arrow facing up, on the draft inducer outlet.

6. Insert the 2 1/2” flanged section of pipe with gasket through the 3” hole and connect to RF000142 drain coupling. Secure it with gear clamp provided.
7. Use the four self-tapping screws removed in step 1 to secure flange to cabinet.
8. Connect drain hose to the uncapped port on the RF000142 coupling, refer to page 19, Section entitled “Horizontal Installation with Left Side Down - Alternate” for drain connection details.

When using the alternate venting location, either in a horizontal left side down installation or a vertical installation using down – venting, the alternate combustion air opening can be used. A locating dimple is located on the right side of the furnace cabinet. The locating dimple is 1-7/8” measured from the front edge of the cabinet in line with the knock out. To use the alternate combustion air location:

1. Remove screws and combustion air flange and gasket from cabinet.
2. Insert the 3” cabinet plug from the drain bag assembly in the unused combustion air hole.
3. Drill a pilot hole at the cabinet dimple (size dictated by knockout tool used).
4. Use a knockout tool to create a 3” diameter hole.
5. Secure the combustion air flange and gasket to the furnace cabinet using the self-tapping screws removed in step 1.

Pipe Termination

Products of combustion must always be vented outside. A vent pipe must never terminate in an attic, crawl space, or any other part of a dwelling. Follow the vent pipe & intake pipe termination requirements listed below as well as all applicable local, State and National codes.

All terminations (vent and/or intake) must be located at least 12” above ground level or the anticipated snow level.

All vent terminations (non-direct and direct vent) must terminate at least 3 feet above any forced air inlet located within 10 feet.

The vent termination of a non-direct vent application must terminate at least 4 feet below, 4 feet horizontally from, or 1 foot above any door, window, or gravity air inlet into any building.

The vent termination of a direct vent application must terminate at least 12” from any opening through which flue gases may enter a building (door, window, or gravity air inlet).

The vent termination of vent pipe run vertically through a roof must terminate at least 12” above the roof line (or the anticipated snow level) and be at least 12” from any vertical wall (including any anticipated snow build up).

A vent termination shall not terminate over public walkways or over an area where condensate or vapor could create a nuisance or hazard or could be detrimental to the operation of regulators, relief valves, or other equipment.

The combustion air intake termination of a direct vent application should not terminate in an area which is frequently dusty or dirty.
Vent & combustion air pipes may terminate vertically through a roof, or horizontally through an outside wall. The combustion air intake and vent pipe terminations must be in the same atmospheric pressure zone. Vertical vent pipe terminations should be as shown in Figure 14. The penetration of pipes through the roof must be sealed water tight with proper flashing such as is used with a plastic plumbing vent.

Horizontal vent pipe terminations should be as shown in the following figures. To secure the pipe passing through the wall and prohibit damage to piping connections, a coupling should be installed on either side of the wall and solvent cemented to a length of pipe connecting the two couplings. The length of pipe should be the wall thickness plus the depth of the socket fittings to be installed on the inside and outside of the wall. The wall penetration should be sealed with silicone caulking material.

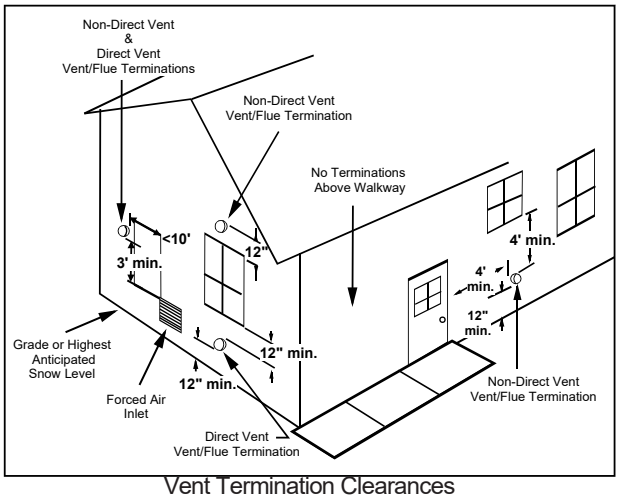

Vent Termination Clearances
Figure 12

DOWN VENTING UPFLOW MODEL FURNACES ONLY

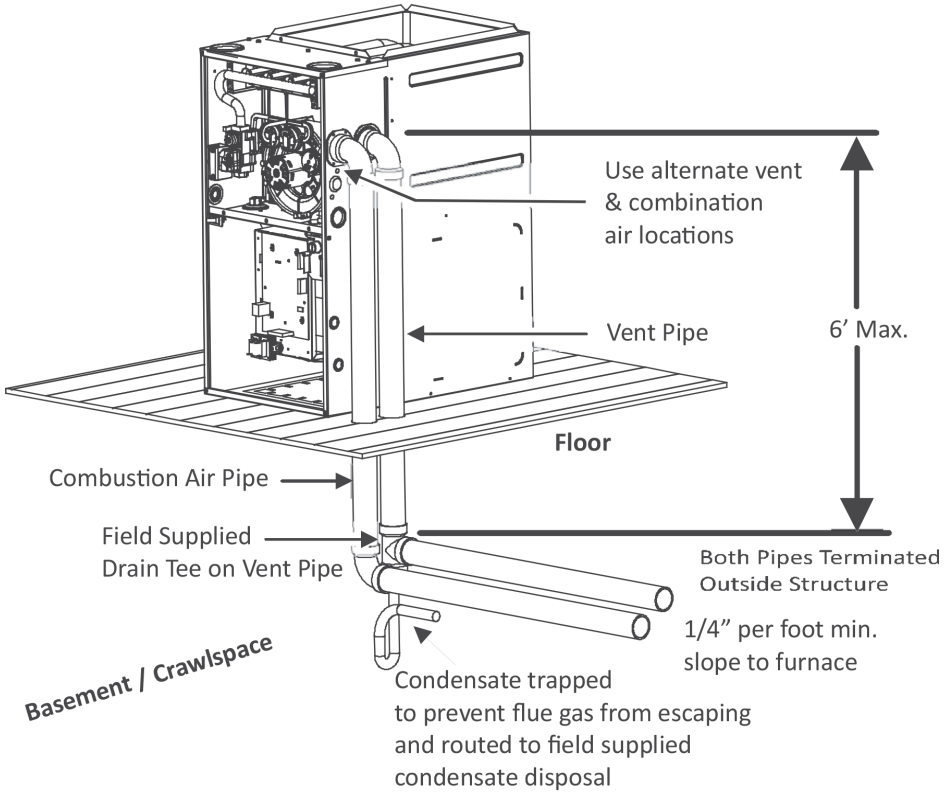

All piping and fittings must be joined per material manufacturers specifications to prevent separation and flue gas leaks.

FIGURE 13

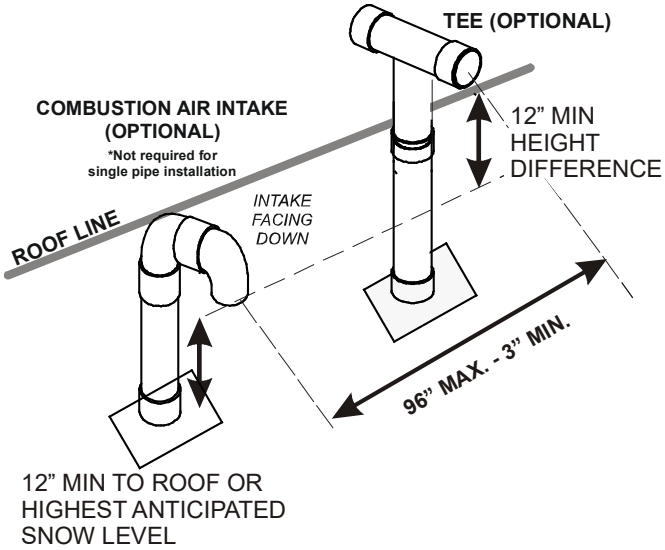

Figure 14 - Vertical Termination

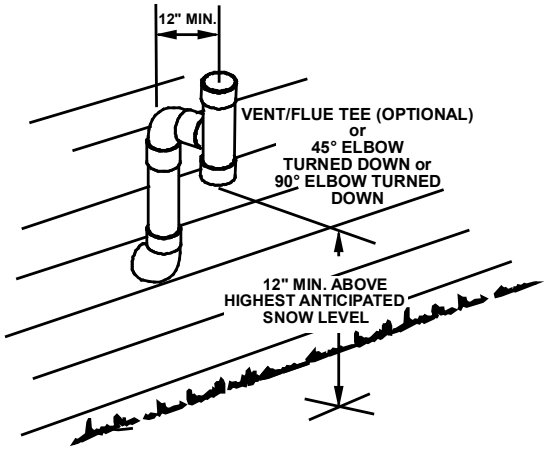

Horizontal Termination (Single Pipe)
Above Highest Anticipated Snow Level
Figure 16

VENT PIPE TERMINATION OPTIONS

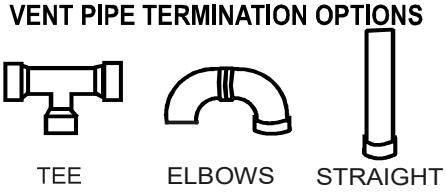

FIGURE 15

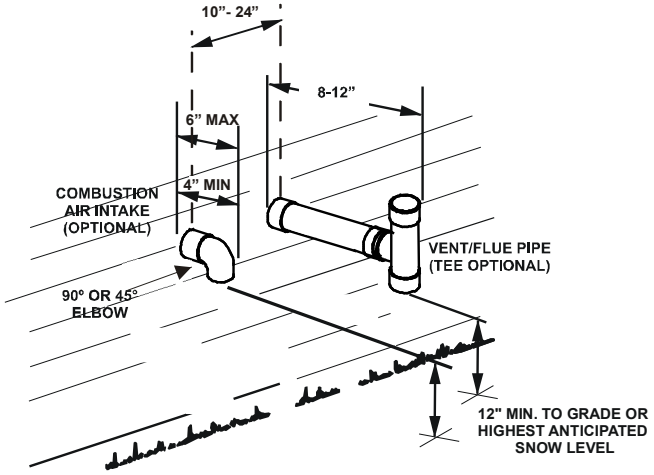

Standard Horizontal Terminations (Dual Pipe)
Figure 17

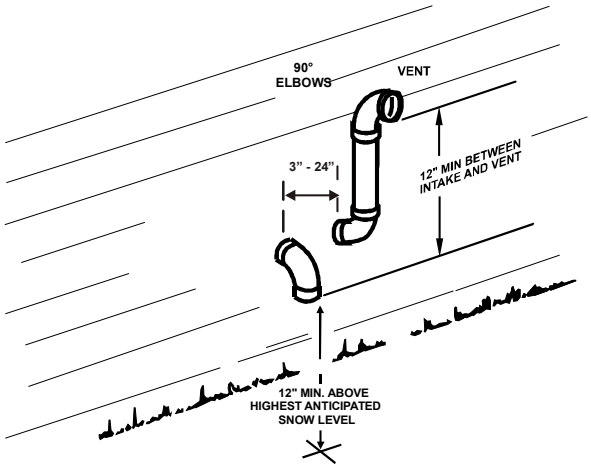

Alternate Horizontal Vent Termination (Dual Pipe)
Figure 18

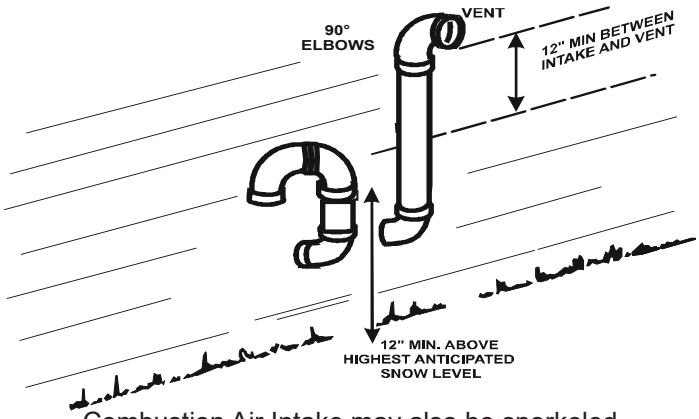

Combustion Air Intake may also be snorkeled to obtain 12” min ground clearance.
Alternate Vent Termination Above Anticipated Snow Level
(Dual Pipe)
Figure 19

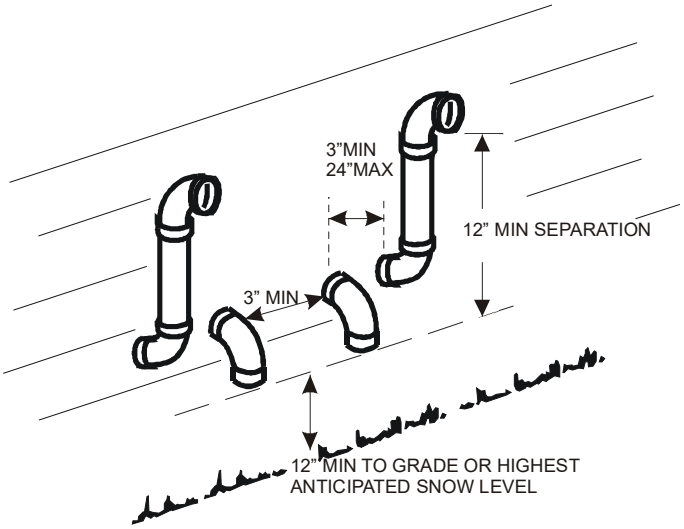

Termination of Multiple Direct Vent Furnaces
Figure 20

Vent/Intake Terminations For Installation of Multiple Direct Vent Furnaces

If more than one direct vent furnace is to be installed vertically through a common roof top, maintain the same minimum clearances between the exhaust vent and air intake terminations of adjacent units as with the exhaust vent and air intake terminations of a single unit.

If more than one direct vent furnace is to be installed horizontally through a common side wall, maintain the clearances as in the following figure. Always terminate all exhaust vent outlets at the same elevation and always terminate all air intakes at the same elevation.

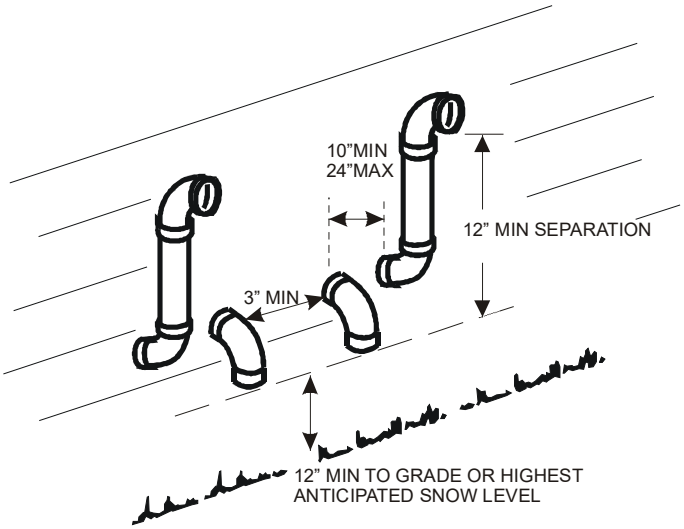

Termination of Multiple Direct Vent Furnaces
Figure 21

Concentric Vent Termination

Refer to the directions provided with the Concentric Vent Kit (DCVK) for installation specifications.

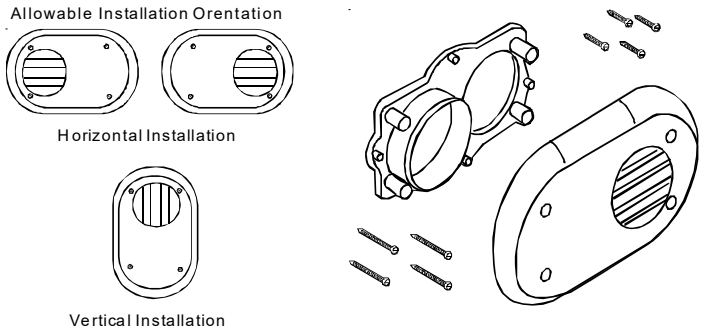

Side Wall Vent Kit
Figure 22

Side Wall Vent Kit

This kit is to be used with 2” or 3” direct vent systems. The vent kit must terminate outside the structure and may be installed with the intake and exhaust pipes located side-by-side or with one pipe above the other. These kits are NOT intended for use with single pipe (non-direct vent) installations.

Refer to the directions furnished with the Side Wall Vent Kit (p/n 0170K00000S or 0170K00001S) for installation specifications.

CONDENSATE DRAIN LINES & DRAIN TRAP

A condensing gas furnace achieves its high level of efficiency by extracting heat from the products of combustion to the point where condensation takes place. The condensate must be collected in the furnace drain trap and routed to an appropriate drain location in compliance with local and national codes.

Follow the bullets listed below when installing the drain system. Refer to the following sections for specific details concerning furnace drain trap installation and drain hose hook ups.

- The drain trap supplied with the furnace must be used.
- The drain trap must be primed at time of installation.
- The drain line between furnace and drain location must meet local and nation codes.
- The drain line between furnace and drain location must maintain a 1/4” per foot downward slope toward the drain.
- Do not trap the drain line in any other location than at the drain trap supplied with the furnace.
- If the drain line is routed through an area which may see temperatures near or below freezing, precautions must be taken to prevent condensate from freezing within the drain line.
- If an air conditioning coil is installed with the furnace, a common drain may be used. An open tee must be installed in the drain line, near the cooling coil, to relieve positive air pressure from the coil’s plenum. This is necessary to prohibit any interference with the function of the furnace’s drain trap.

NOTE: In vertical installations, air conditioning coil condensate may drain into the furnace trap as long as there is a trap between the coil and the furnace trap and the drain pipe is not terminating below the water level of the furnace trap.

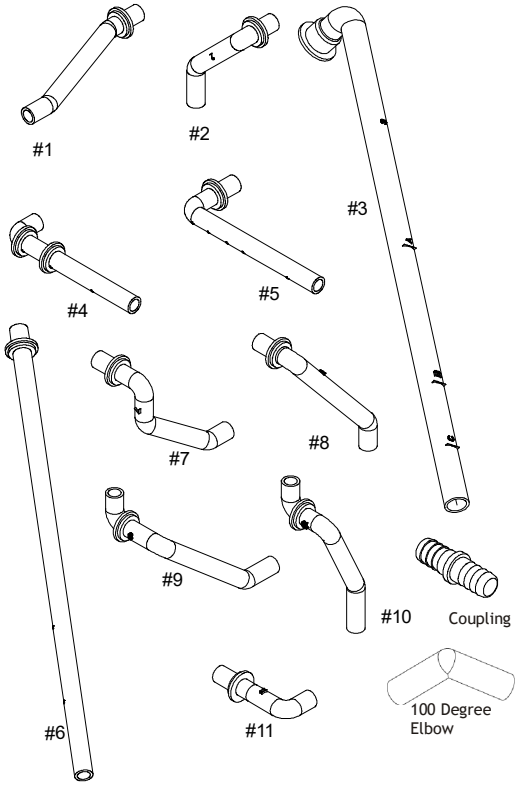

Figure 23

NOTE: Drain components shown for information purposes only.

General Drain Information

All furnace models come with a factory installed drain trap. For vertical installations, the trap will remain in the factory position. All furnace models installed horizontally require the trap to be relocated. Many drain hoses have a built–in grommet which will provide a cabinet seal when installed. See instructions below for your model and installation position.

NOTE: Both sides of the drain trap must be primed prior to initial furnace start up

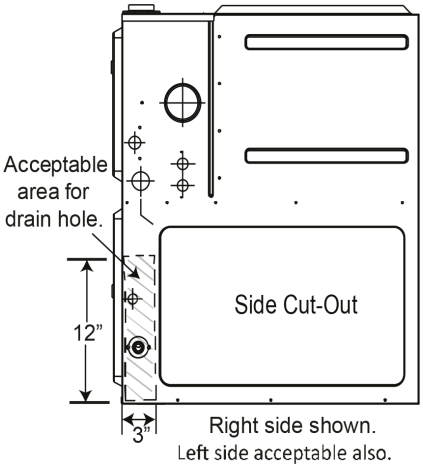

Figure 24

Field Supplied Drain

Drain the furnace and air conditioning coil if applicable, in compliance with code requirements. In horizontal installations, a field installed rubber coupling will allow the drain trap to be removed for cleaning. The drain trap must be primed before initial furnace start up. When an air conditioning coil drain is connected to the field supplied furnace drain, it must be vented. An open tee must be installed at a height no higher than the bottom of the furnace collector box to prevent air conditioning condensate from backing up into the furnace, if the common drain was blocked.

Upflow Model Installed Vertically

The trap and factory installed hoses remain as shipped. The furnace drain may exit either the right or left side of the furnace cabinet. Both sides of the cabinet have two .875” diameter holes which can be used interchangeably for drain and low voltage wiring purposes. If a higher drain exit is needed, a .875” diameter hole may be added in the area shown in Figure 24. Any unused cabinet opening must be sealed. Do not allow drain hose to sag or trap water.

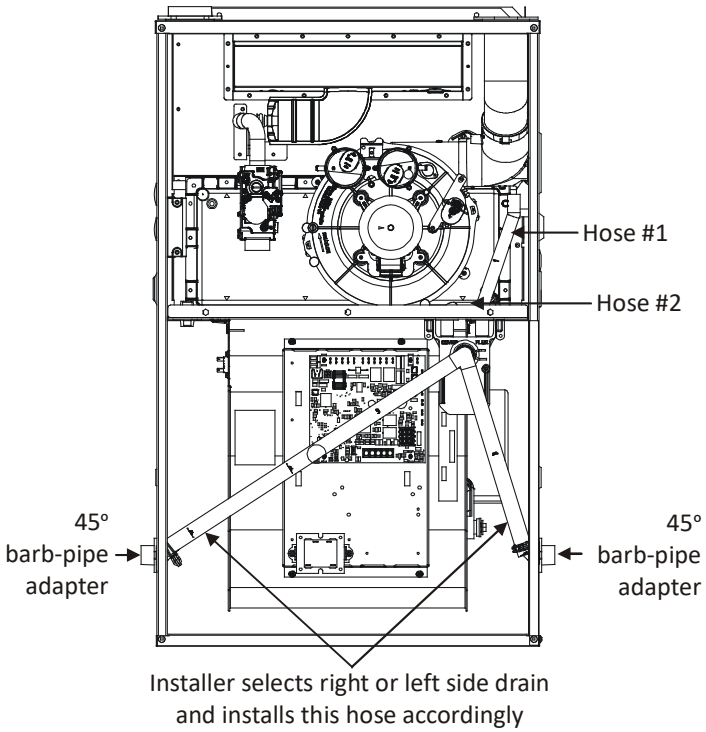

Figure 25

Drain Exiting Right Side

1. Locate and Install the 45º pipe/hose drain coupling from the outside of the cabinet (barbed end goes in the cabinet) through hole in the right side of the cabinet and secure with two field supplied #8 self-tapping screws (see Figure 25).
2. Locate the long drain hose #3 and cut at line “A”.
3. Install large end of hose #3 to trap outlet and secure with 1.25” clamp.
4. Install smaller end of hose #3 on 45º elbow and secure with 1” clamp.
5. Refer to Field Supplied Drain section for instructions on field supplied/installed drain on outlet of furnace trap.

Drain Exiting Left Side

1. Install the 45º pipe/hose drain coupling from the outside of the cabinet (barbed end goes in the cabinet) through the hole in the left side of the cabinet and secure with two field supplied #8 self-tapping screws (see Figure 25).
2. Locate the long drain hose #3 and cut at “B” line for a 17.5” cabinet; cut at line “C” for a 21” cabinet; do not cut for a “D” width cabinet.
3. Install large end of hose #3 to trap outlet and secure with 1.25” clamp.
4. Install smaller end of hose #3 on 45º elbow and secure with 1” clamp.
5. Refer to Field Supplied Drain section for instructions on field supplied/installed drain on outlet of furnace trap.

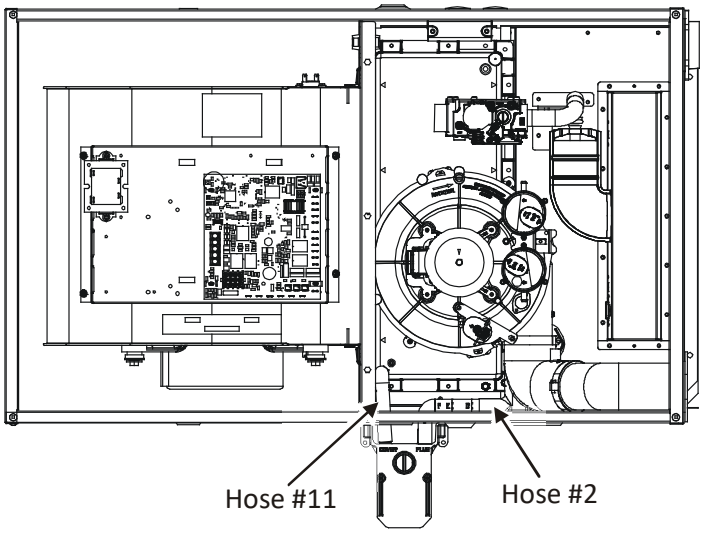

Figure 26

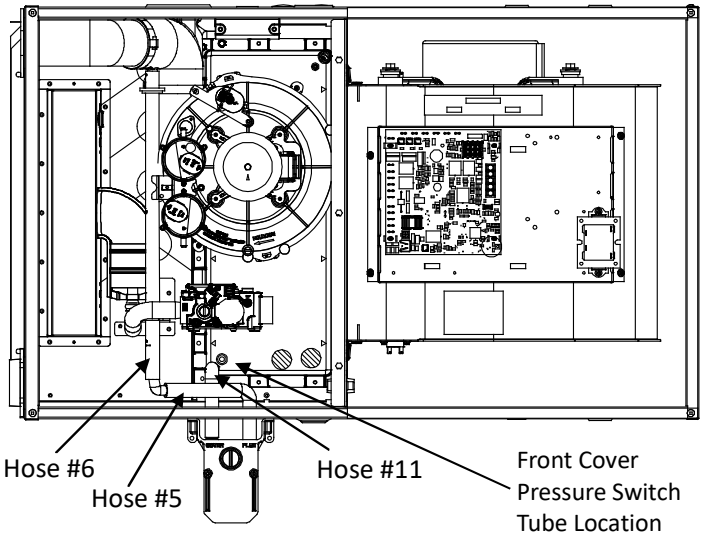

Figure 27

Horizontal Installation with Right Side Down

Minimum 5 ½" clearance is required for the drain trap beneath the furnace.

1. Remove the clamps from both ends of the drain hoses.
2. Remove the two screws holding the drain trap to the blower deck.
3. Remove the trap and two hoses from the blower deck
4. Remove the two plugs from the right side of the cabinet and install them in the blower deck.
5. Draining the Vent Elbow: Locate hose #2 (factory installed) and cut 1" away from the 45º bend, discard the 45º section. Insert hose #2 from outside the cabinet through the cabinet drain hole nearest the top, secure it to the barbed fitting in the elbow with a red clamp.
6. Draining the Collector Box: Install the non-grommet end of hose #11 from outside the cabinet in the bottom drain hole. Install on collector box and secure with a silver clamp.
7. Use two silver clamps and secure the hoses to drain trap. The trap outlet faces the front of the furnace. Secure the trap to the cabinet using two screws removed in step 2 by inserting the two screws through the large set of holes in the top mounting tabs of the trap into the two predrilled holes in the side of the cabinet.
8. Refer to Field Supplied Drain section for instructions on field supplied/installed drain on outlet of furnace trap.

Horizontal Installation with Left Side Down

Minimum 5 ½" clearance is required for the drain trap beneath the furnace.

**See Front Cover Pressure Switch Tube Location on Figure 27.*

1. Remove the clamps from the two drain tubes on the trap.
2. Remove the two screws holding the drain trap to the blower deck.
3. Remove the trap and hoses from the blower deck.
4. Remove the two plugs from the left side of the cabinet and install them in the blower deck.
5. Draining the Vent Elbow: Locate hose #6. Measuring from the non-grommet end; cut off and discard 1 ½" for a "D" width cabinet, 5" for a "C" width cabinet, 8 ½" for a "B" width cabinet.
6. Remove the rubber plug from vent – drain elbow side port. Place hose #6 on the vent – drain elbow side port and secure with a silver clamp .
7. Unused vent-drain elbow drip leg port must be sealed to prevent flue gases from escaping. Insert the rubber plug removed in step 6 into the unused elbow drain port. Inserting a blunt tool such as a 3/16'' Allen wrench into the center of the rubber plug will stretch the plug and allow complete insertion.
8. Locate hose #5 and cut 3" from the non-grommet end. Discard the section without the grommet.
9. Insert the cut end of tube #5 through the lower cabinet drain hole.
10. Connect hose #6 & hose #5 using 100º elbow and secure with two red clamps
11. Draining the Collector Box: Remove cap from left side collector box drain port (bottom in horizontal left position) and install it on right side (top) collector box drain port.
12. Install the non-grommet end of hose #11 from outside the cabinet in the upper drain hole. Install on collector box and secure with a silver clamp.

13. Use two silver clamps and secure the hoses to drain trap. The trap outlet faces the front of the furnace. Secure the trap to the cabinet using two screws removed in step 2 by inserting the two screws through the large set of holes in the top mounting tabs of the trap into the two pre-drilled holes in the side of the cabinet.
14. Refer to Field Supplied Drain section for instructions on field supplied/installed drain on outlet of furnace trap.

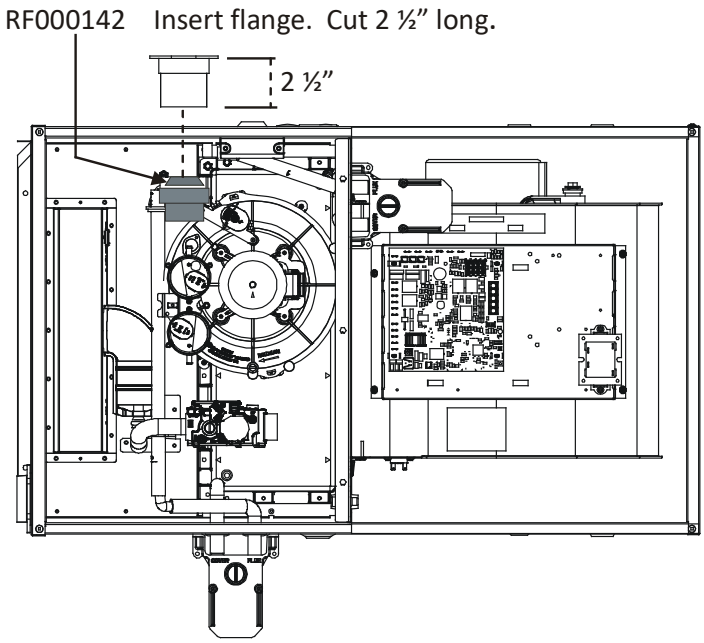

Figure 28

Horizontal Installation with Left Side Down - Alternate

See Front Cover Pressure Switch Tube Location on Figure 27.

1. Draining the RF000142 Coupling: Locate hose #2 (factory installed). Cut off and discard the 45° radius end.
2. Install 90°radius end of hose #2 on RF000142 drain outlet and secure with a red clamp.
3. Insert coupling in hose #2 and secure with a red clamp.
4. Locate hose #5 and cut 3" from the non-grommet end. Discard the section without the grommet.
5. Insert the cut end of tube #5 through the lower cabinet drain hole.
6. Insert 100° elbow in the cut end of hose #5.
7. Locate hose #6. Using red clamps, connect between the coupling and 100° elbow, cutting off excess tubing.
8. Draining the Collector Box: Remove cap from left side collector box drain port (bottom in horizontal left position) and install it on right side (top) collector box drain port and secure with a red clamp.
9. Install the non-grommet end of hose #11 from outside the cabinet in the upper drain hole. Install on collector box and secure with a silver clamp.
10. Use two silver clamps and secure the hoses to drain trap. The trap outlet faces the front of the furnace. Secure the trap to the cabinet using two screws removed in step 2 by inserting the two screws through the large set of holes in the top mounting tabs of the trap.

ELECTRICAL CONNECTIONS

WARNING

Edges of sheet metal holes may be sharp. Use gloves as a precaution when removing hole plugs.

Wiring Harness

The wiring harness is an integral part of this furnace. Wires are color coded for identification purposes. Refer to the wiring diagram for wire routings. If any of the original wire as supplied with the furnace must be replaced, it must be replaced with wiring material having a temperature rating of at least 105°C. Any replacement wiring must be a copper conductor.

115 Volt Line Connections

Before proceeding with electrical connections, ensure that the supply voltage, frequency, and phase correspond to that specified on the unit rating plate. Power supply to the furnace must be NEC Class 1, and must comply with all applicable codes. The furnace must be electrically grounded in accordance with local codes or, in their absence, with the latest edition of The National Electric Code, ANSI NFPA 70.

Use a separate fused branch electrical circuit containing properly sized wire, and fuse or circuit breaker. The fuse or circuit breaker must be sized in accordance with the maximum overcurrent protection specified on the unit rating plate. An electrical disconnect must be provided at the furnace location.

Connect hot, neutral, and ground wires as shown in the wiring diagram located on the unit's blower door. For direct vent applications, the cabinet opening to the junction box must be sealed air tight using either an UL approved bushing such as Heyco Liquid Tight or by applying non-reactive UL approved sealant to bushing.

Line polarity must be observed when making field connections. Line voltage connections can be made through either the right or left side panel. The furnace is shipped configured for a left side electrical connection with the junction box located inside the burner compartment. To make electrical connections through the opposite side of the furnace, the junction box must be relocated to the other side of the burner compartment prior to making electrical connections. To relocate the junction box, follow the steps shown in the Junction Box Relocation section.

WARNING

High Voltage!
To avoid personal injury or death due to electrical shock, disconnect electrical power before servicing or changing any electrical wiring.

CAUTION

Label all wires prior to disconnection when servicing controls. Wiring errors can cause improper and dangerous operation. Verify proper operation after servicing.

WARNING

High Voltage!
To avoid the risk of injury, electrical shock or death, the furnace must be electrically grounded in accordance with local codes or in their absence, with the latest edition of the National Electric Code.

Junction Box Relocation

Line voltage connections can be made through either the right or left side panel. The furnace is shipped configured for a left side electrical connection. To make electrical connections through the opposite side of the furnace, the junction box must be relocated to the left side prior to making electrical connections. To relocate the junction box, perform the following steps.

1. Remove the burner compartment door.
2. Remove and save the two screws securing the junction box to the side panel.
3. Relocate junction box and associated plugs and grommets to opposite side panel. Secure with screws removed in step 2.

IMPORTANT NOTE

Wire routing must not interfere with circulator blower operation, filter removal or routine maintenance.

To ensure proper unit grounding, the ground wire should run from the furnace ground screw located inside the furnace junction box all the way back to the electrical panel. NOTE: Do not use gas piping as an electrical ground. To confirm proper unit grounding, turn off the electrical power and perform the following check.

1. Measure resistance between the neutral (white) connection and any unpainted surface.
2. Resistance should measure 10 ohms or less.

This furnace is equipped with a blower door interlock switch which interrupts unit voltage when the blower door is opened for servicing. Do not defeat this switch.

THERMOSTAT REQUIREMENTS

When installed with a 24 volt thermostat, the furnace integrated control module provides terminals for "W" and "Y" and "Y2" (DH/Y2) thermostat connections. Refer to the following figures for proper connections to the integrated control module.

Low voltage connections can be made through either the right or left side panel. Thermostat wiring entrance holes are located in the blower compartment.

Control Wiring Using 24 Volt Thermostats

DM96SC furnaces may be installed with a typical 24 volt thermostat or Daikin One + Smart Thermostat. However, when a communicating outdoor unit is used, the Daikin One + thermostat must be used.

Connect all necessary thermostat wires to the thermostat connector on the furnace control and outdoor unit, as shown in the following diagrams.

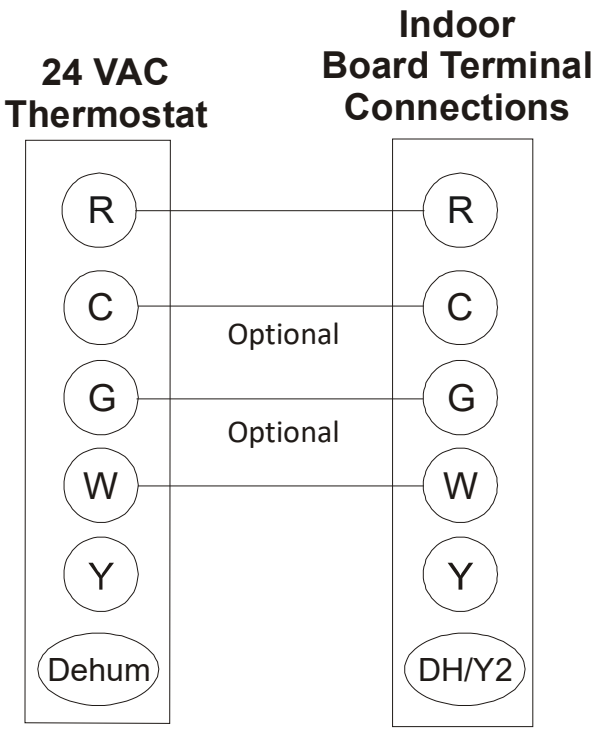

Gas Heat Only
Figure 29

NOTE: When installing the furnace with a non communicating heat pump wire directly from the "O" terminal on the thermostat to the reversing valve "O" terminal on the non communicating heat pump.

When a furnace is installed with a non-communicating outdoor unit the installing contractor must set airflow in the “ton” menu on the PCB. Failure to do so will result in the furnace PCB displaying “IdL” and the blower not operating with a call for cooling. This condition indicates that the installer MUST set up the airflow, and is not an indication that the control board needs replacement.

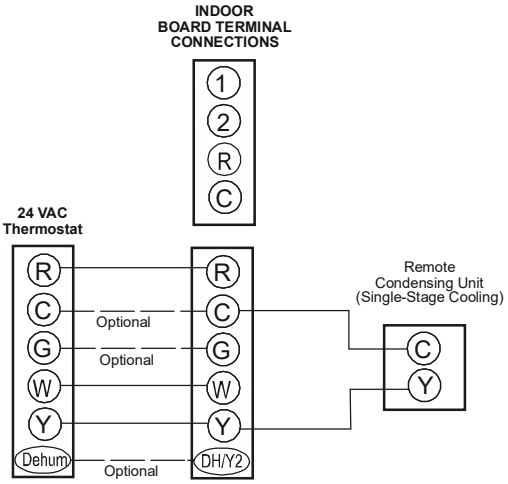

Non-Communicating Single Stage A/C
Figure 30

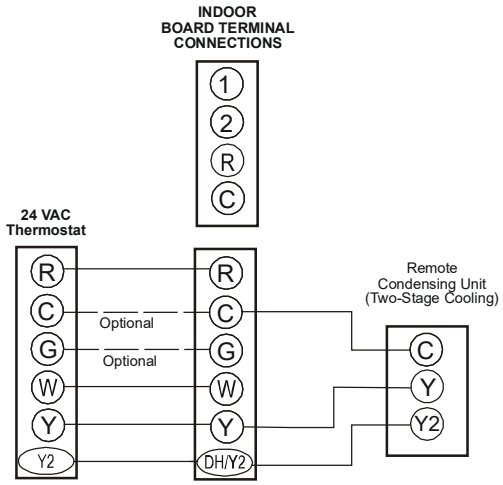

Non-communicating Two-stage A/C
Figure 31

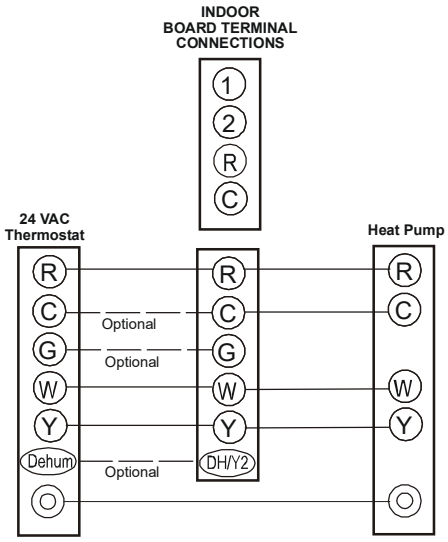

Non-communicating Single-stage Heat Pump
Figure 32

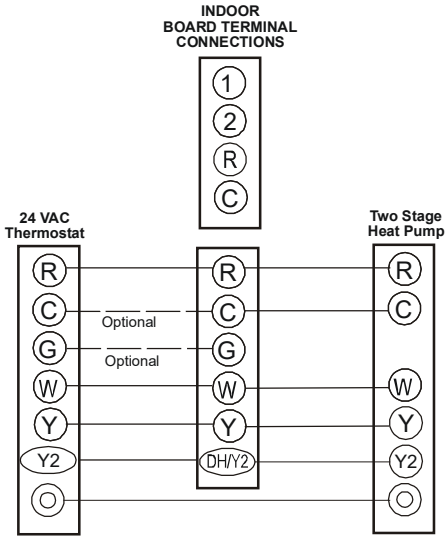

Non-communicating Two-stage Heat Pump
Figure 33

Refrigerant Charging

Set up airflow before proceeding.

3. 1) Select the Non-Comm Outdoor Setting menu (OdS) using the on board push buttons. Select 1 AC for single stage Air Conditioners, 1HP for single stage heat pumps, 2 AC for two stage air conditioners and 2 HP for two stage Heat Pumps.
4. 2) Go to the tonnage units menu (ton) and select the tonnage value that corresponds to the desired airflow for the outdoor unit. See the following table.

For Two-stage outdoor units: Provide a second stage cooling call from the thermostat and charge accordingly.

NOTE: For two stage non-communicating outdoor units, system will stage airflow automatically for low stage operation.

Tonnage Selection	Airflow	Tonnage Selection	Airflow	Tonnage Selection	Airflow	Tonnage Selection	Airflow
1	400	2.3	920	3.6	1440	4.9	1960
1.1	440	2.4	960	3.7	1480	5	2000
1.2	480	2.5	1000	3.8	1520	5.1	2040
1.3	520	2.6	1040	3.9	1560	5.2	2080
1.4	560	2.7	1080	4	1600	5.3	2120
1.5	600	2.8	1120	4.1	1640	5.4	2160
1.6	640	2.9	1160	4.2	1680	5.5	2200
1.7	680	3	1200	4.3	1720	5.6	2240
1.8	720	3.1	1240	4.4	1760	5.7	2280
1.9	760	3.2	1280	4.5	1800	5.8	2320
2	800	3.3	1320	4.6	1840	5.9	2360
2.1	840	3.4	1360	4.7	1880	6	2400
2.2	880	3.5	1400	4.8	1920		

Table 5

NOTE: The system will not provide airflows above the Max Airflow Value.

- **3 Ton Models = 1,400 CFM**
- **4 Ton Models = 1,760 CFM**
- **5 Ton Models = 2,200 CFM**

Quick Start Guide For Communicating Outdoor Units

NOTE: The control board does not accommodate an O wire thermostat input (reversing valve signal).

1. Connect all necessary thermostat wires to the thermostat connector on the furnace control as instructed by the applicable wiring diagrams shown in this section.
2. Connect the 1 & 2 wires between the indoor and outdoor unit for communicating operation.

DAIKIN COMMUNICATING SYSTEM

NOTE: When installing a Daikin One+ Smart Thermostat, please visit the Daikin One+ Smart Thermostat website at https://www.daikinone.com for full instructions on a detailed procedure of thermostat commissioning process.

NOTE: Only Use Daikin Approved Communicating Thermostats. Approved Communicating Thermostats Are Daikin One+ Smart Thermostat, and CTK04.

The Daikin Communicating system is a system that includes a Daikin Communicating compatible furnace and air conditioner or heat pump with a communicating thermostat. A valid Daikin Communicating system could also be a compatible furnace, communicating thermostat and non-compatible, single stage air conditioner. Any other system configurations are considered invalid Daikin Communicating systems and must be connected as a traditional (or non-communicating) system (see Electrical Connections for wiring connections).

A Daikin Communicating heating/air conditioning system differs from a non-communicating/traditional system in the manner in which the indoor unit, outdoor unit and thermostat interact with one another. In a traditional system, the thermostat sends commands to the indoor and outdoor units via analog 24 VAC signals. It is a one-way communication path in that the indoor and outdoor units typically do not return information to the thermostat.

In a Daikin Communicating system, the indoor unit, outdoor unit, and thermostat comprising a Daikin Communicating system “communicate” digitally with one another, creating a two-way communications path. The thermostat still sends commands to the indoor and outdoor units.
However, the thermostat may also request and receive information from both the indoor and outdoor units.
This information may be displayed on the Daikin Communicating thermostat. The indoor and outdoor units also interact with one another. The outdoor unit may send commands to or request information from the indoor unit. This two-way digital communications between the thermostat and subsystems (indoor/outdoor unit) and between subsystems is the key to unlocking the benefits and features of the Daikin Communicating system.

Two-way digital communications is accomplished using only two wires. The thermostat and subsystem controls are power with 24 VAC. Thus, a maximum of 4 wires between the equipment and thermostat is all that is required to operate the system.

Airflow Considerations

Airflow demands are managed differently in a fully communicating system than they are in a non-communicating wired system. The system operating mode (as determined by the thermostat) determines which unit calculates the system airflow demand. If the indoor unit is responsible for determining the airflow demand, it calculates the demand and sends it to the ECM motor. If the outdoor unit or thermostat is responsible for determining the demand, it calculates the demand and transmits the demand along with a fan request to the indoor unit. The indoor unit then sends the demand to the ECM motor. The table below lists the various Daikin Communicating systems, the operating mode, and airflow demand source.

For example, assume the system is an air conditioner matched with a furnace. With a call for low stage cooling, the air conditioner will calculate the system's low stage cooling airflow demand. The air conditioner will then send a fan request along with the low stage cooling airflow demand to the furnace. Once received, the furnace will send the low stage cooling airflow demand to the ECM motor. The ECM motor then delivers the low stage cooling airflow. See the applicable Daikin Communicating air conditioner or heat pump installation manual for the airflow delivered during cooling or heat pump heating.

System	System Operating Mode	Airflow Demand Source
Air Conditioner + Furnace	Cooling	Air Conditioner
	Heating	Furnace
	Continuous Fan	Thermostat
Heat Pump + Furnace	Cooling	Heat Pump
	Heat Pump Heating Only	Heat Pump
	Auxiliary Heating	Furnace
	Continuous Fan	Thermostat
Furnace + Non-Comm 1stg Air Conditioner	Cooling	Furnace
	Heating	Furnace
	Continuous Fan	Thermostat

Fossil Fuel Applications

This furnace can be used in conjunction with a Daikin Communicating compatible heat pump in a fossil fuel application. A fossil fuel application refers to a combined gas furnace and heat pump installation which uses an outdoor temperature sensor to determine the most cost efficient means of heating (heat pump or gas furnace). The balance point temperature may be adjusted via the communicating thermostat advanced user menus.

Communicating Thermostat Wiring

NOTE: A removable plug connector is provided with the control to make thermostat wire connections. This plug may be removed, wire connections made to the plug, and replaced.

It is strongly recommended that you do not connect more than two wires into a single terminal in the field because there is a risk of the wires becoming loose. Failure to do so may result in intermittent operation. To wire the system components, it is strongly recommended to use the same type and the same gauge for the wires prepared in the field (for best results use 18 AWG).

Typical Daikin Communicating wiring will consist of two wires between the indoor and outdoor units, four wires between the indoor unit and the thermostat. The required wires are: (a) data lines, 1 and 2; (b) thermostat "R" (24 VAC hot) and "C" (24 VAC common).

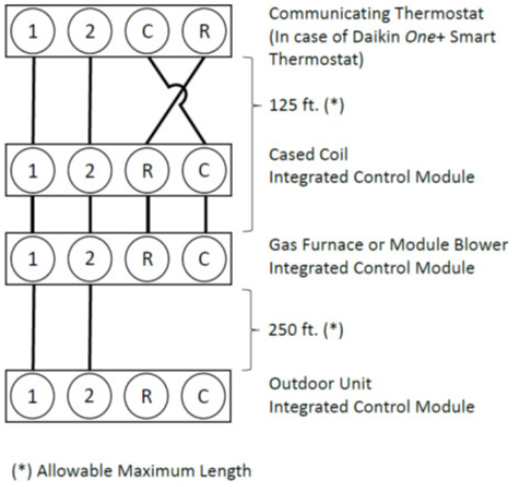

Daikin Communicating System Advanced Features

The Daikin Communicating system permits access to additional system information, advanced setup features, and advanced diagnostic/troubleshooting features. These advanced features are organized into a menu structure. The menus are accessed and navigated by means of the communicating thermostat. For details, see the thermostat instruction manual.

NOTE: If an E11 code exists for the inverter system immediately after line voltage is applied (code displayed on the inverter control), the System Verification Test needs to be completed before any other operation. See the following procedure.

- Charge the inverter units by setting the CR9 menu (Charge Mode) to ON through the furnace control board pushbuttons
- The System will remain in charge mode (high speed) for 60 minutes before timing out.
- The installer must manually shut off charge mode once complete.

Confirm thermostat heating and cooling calls function properly with equipment.

Dehumidification (Non-Communicating)

Control logic allows the furnace's circulating blower to operate at a reduced speed during a combined thermostat call for cooling, and a dehumidification demand. This lower blower speed increases moisture removal as it passes through the indoor coil.

Auxiliary Alarm Switch

The control is equipped with a 24VAC Aux Alarm, accommodating condensate switch installations. The connection is designated as AUX IN/OUT on the control board. By default, the connected AUX switch is normally closed and opens when the water level in the evaporator coil base pan reaches an unacceptable level. The control responds by displaying an EEF error code and turning off the outdoor condensing unit. If the AUX switch is detected to be in the closed position for 30 seconds, regular operation resumes and the error message is no longer displayed.

NOTE: Alarm can be disabled through Push Buttons on PCB (24VAC) or through the Daikin ONE+ Smart Thermostat.

Pushbutton Menu

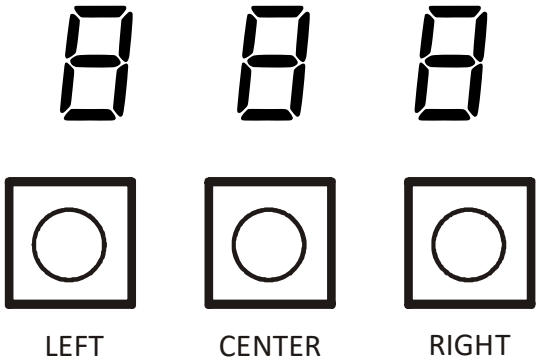

Figure 35

The furnace includes three on-board pushbuttons allowing users to navigate indoor and outdoor system menus. The "RIGHT" and "LEFT" buttons enable the user to scroll through the main menus and to then scroll through available options within specific menus. The "CENTER" button enters the main menu and then permanently selects options within those menus.

NOTE: After scrolling to the desired option within a menu, that option may be flashing on the 7-segment displays. This condition indicates no selection is selected. Pressing the Center button twice chooses the option. The first press stops the flashing, and the second makes the selection official and returns to the main menu.

Accessories

When installing an external humidifier, dehumidifier, or ventilator, it may require airflow setting modification at the HVAC system to function accordingly.

1. Make sure the installed 24VAC thermostat is capable of controlling the accessory or accessories.
2. Connect the appropriate accessory control wires to the accessory devices from the thermostat (see thermostat manual for connection and setup instructions).
3. If the thermostat is capable of providing a continuous fan call (G signal) during accessory operation: Make sure to connect the thermostat G terminal to the G terminal on the indoor unit. Set up the thermostat, ensuring the G signal energizes during accessory operation.
4. Select the appropriate fan only airflow for the accessory using the indoor unit pushbutton menus.
5. Using the thermostat, independently test each accessory in parallel with the continuous fan mode for proper airflow.

Ramping Profiles

The variable-speed circulator offers four different ramping profiles. Use these profiles to enhance cooling performance and increase comfort level. Select ramping profiles on the user menu.

- **Profile A** (1) provides only an OFF delay of one (1) minute at 100% of the cooling demand airflow.

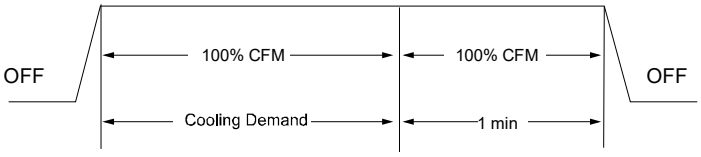

Figure 36

- **Profile B** (2) ramps up to full cooling demand airflow by first stepping up to 50% of the total demand for 30 seconds. The motor then ramps to 100% of the required airflow. The motor provides a one-minute, post-cycle OFF delay at 100% airflow.

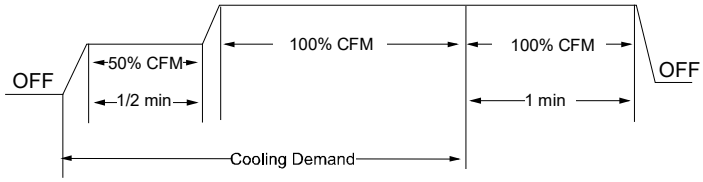

Figure 37

- **Profile C** (3) ramps up to 85% of the full cooling demand airflow and operates for approximately 7 1/2 minutes. The motor then steps up to the 100% demand airflow. The motor provides a one-minute, post-cycle OFF delay at 100% airflow.

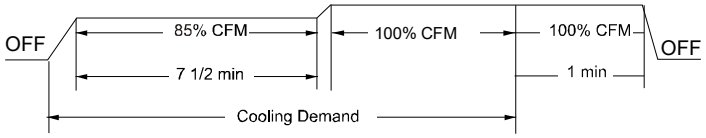

Figure 38

- **Profile D** (4) ramps up to 50% demand for 1/2 minute, then ramps to 85% of the full cooling demand for 7 1/2 minutes. Once elapsed, the motor runs at 100% capacity for the remainder of the cycle, and provides a post-cycle OFF delay at 50% airflow.

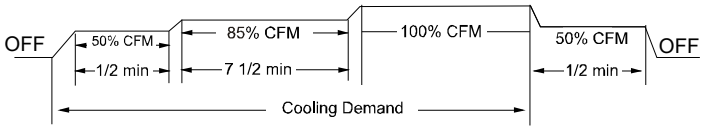

Figure 39

115 Volt Line Connection or Electronic Air Cleaner

WARNING

High voltage!
To avoid personal injury or death due to electrical shock, disconnect electrical power before servicing or changing any electrical wiring.

The accessory load specifications are as follows:

EAC	1.0 AMP maximum at 120 VAC

Table 6

The furnace integrated control module is equipped with a line voltage accessory terminal for controlling power to an optional, field-supplied electronic air cleaner or any device required to operate in parallel with a circulating fan demand.

To connect an electronic air cleaner using the line voltage EAC terminal:

- Turn OFF power to the furnace before installing any accessories.
- Follow the air cleaner manufacturers' instructions for locating, mounting, grounding, and controlling accessories. Utilize 1/4" quick connect terminals to make accessory wiring connections to the furnace integrated control module.
- Connect the hot terminal utilized for accessory operation to the EAC terminal and the neutral side of power to NEUTRAL bus on the integrated furnace control or the neutral connection in the furnace junction box.
- All field wiring must conform to applicable codes.
- If necessary for the installer to supply additional line voltage wiring to the inside of the furnace, wiring must conform to all local codes and have a minimum temperature rating of 105°C.
- All line voltage wire splices must be inside the furnace cabinet.

STARTUP PROCEDURE & ADJUSTMENT

Furnace must have a 115 VAC power supply properly connected and grounded. Correct operation is dependent on proper wiring polarity. In addition to the following start-up and adjustment items, refer to further information in *Operational Checks* section.

Furnace Cabinet

Check that all furnace cabinet sealing components are in place (plugs, grommets, gaskets). NOTE: Seal all bottom panel return duct connections and perforations with duct sealant compound or other suitable method to prevent air leakage. For optimal performance, verify that all door gaskets are correctly in place and replace as needed to avoid air leakage.

Drain Trap Priming

Prime the drain trap before furnace startup. To prime, fill both sides of the drain trap with water. This step ensures proper furnace drainage upon startup and prohibits the possibility of flue gases escaping through the drain system.

Furnace Operation

Purge gas lines of air prior to startup. Be sure not purge lines into an enclosed burner compartment. Follow NFPA 54, National Fuel Gas Code for proper purging methods. In Canada, follow approved purging methods in CAN/CSA B149.1-15.

Check for leaks using an approved chloride-free soap and water solution, an electronic combustible gas detector, or other approved method. Verify proper operation of all required kits (high altitude, ect.).

Furnace Startup

1. Close the manual gas shutoff valve external to the furnace.
2. Turn off the electrical power to the furnace.
3. Set the room thermostat to the lowest possible setting.
4. Remove the burner compartment door.

NOTE: The ignition device in this furnace lights automatically. Do not try to light the burner by hand.

5. Move the furnace gas valve manual control to the OFF position.
6. Wait five minutes, then smell for gas. Be sure to check near the floor as some types of gas are heavier than air.

7. If you smell gas after five minutes, immediately follow the safety instructions in the *Safety Considerations* on page 3 of this manual. If you do not smell gas after five minutes, move the furnace gas valve manual control to the ON position.
8. Replace the burner compartment door.
9. Open the manual gas shutoff valve external to the furnace.
10. Turn on the electrical power to the furnace.
11. Adjust the thermostat to a setting above room temperature.
12. After the burners light, set the thermostat to the desired temperature.

Furnace Shutdown

1. Set the thermostat to the lowest setting.
   The integrated control will close the gas valve and extinguish flame. Following a 15 second delay, the induced draft blower will be de-energized. After the fan OFF delay time expires, the blower de-energizes.
2. Remove the burner compartment door and move the furnace gas valve manual control to the OFF position.
3. Close the manual gas shutoff valve external to the furnace.
4. Replace the burner compartment door.

GAS SUPPLY AND PIPING

CAUTION

To prevent unreliable operation or equipment damage, the gas manifold pressure must be as specified on the unit rating plate. Only minor adjustments should be made by adjusting the gas valve pressure regulator.

WARNING

Possible property damage, personal injury, or death may occur if the correct conversion kits are not installed. The appropriate kits must be applied to ensure safe and proper furnace operation. All conversions must be preformed by a qualified installer or service agency.

INLET GAS SUPPLY PRESSURE		
Natural Gas	Minimum: 4.5" W.C.	Maximum: 10.0" W.C.

Table 7

Inlet gas supply pressures must be maintained within the ranges specified in the table 7. The supply pressure must be constant and available with all other household gas fired appliances operating. The minimum gas supply pressure must be maintained to prevent unreliable ignition. The maximum must not be exceeded to prevent unit overfiring.

WARNING

To avoid possible unsatisfactory operation or equipment damage due to underfiring of equipment, use the proper size of natural gas piping needed when running pipe from the meter/tank to the furnace.

Gas Valve

This unit is equipped with a 24 volt gas valve controlled during furnace operation by the integrated control module. Taps for measuring the gas supply pressure and manifold pressure are provided on the valve.

The gas valve has a manual ON/OFF control located on the valve itself. This control may be set only to the “ON” or “OFF” position. Refer to the lighting instructions label or Startup Procedure & Adjustment for use of this control during start up and shut down periods.

Gas Piping Connections

WARNING

To avoid possible unsatisfactory operation or equipment damage due to underfiring of equipment, use the proper size of natural gas piping needed when running pipe from the meter/tank to the furnace.

When sizing gas lines, be sure to include all appliances which will operate simultaneously. The gas piping supplying the furnace must be properly sized based on the gas flow required, specific gravity of the gas, and length of the run. The gas line installation must comply with local codes, or in their absence, with the latest edition of the National Fuel Gas Code, NFPA 54/ANSI Z223.1

To connect the furnace to the building’s gas piping, the installer must supply a ground joint union, drip leg, manual shutoff valve, and line and fittings to connect to gas valve. In some cases, the installer may also need to supply a transition piece from 1/2” pipe to a larger pipe size.

The following stipulations apply when connecting gas piping. Refer to Gas Piping Connections Figures 40 and 41 for typical gas line connections to the furnace.

- Gas piping must be supported external to the furnace cabinet so that the weight of the gas line does not distort the burner rack, manifold or gas valve.
- Use black iron or steel pipe and fittings for building piping. Where possible, use new pipe that is properly chamfered, reamed, and free of burrs and chips. If old pipe is used, be sure it is clean and free of rust, scale, burrs, chips, and old pipe joint compound.
- Use pipe joint compound on male threads ONLY.

Always use pipe joint compound (pipe dope) that is APPROVED FOR ALL GASSES. DO NOT apply compound to the first two threads.

- Use ground joint unions.
- Install a drip leg to trap dirt and moisture before it can enter the gas valve. The drip leg must be a minimum of 3” long.
- Install a 1/8” NPT pipe plug fitting, accessible for test gauge connection, immediately upstream of the gas supply connection to the furnace.
- Always use a back-up wrench when making the connection to the gas valve to keep it from turning. The orientation of the gas valve on the manifold must be maintained as shipped from the factory. Maximum torque for the gas valve connection is 375 in-lbs; excessive over-tightening may damage the gas valve.
- Install a manual shutoff valve between the gas meter and unit within six feet of the unit. If a union is installed, the union must be downstream of the manual shutoff valve, between the shutoff valve and the furnace.
- Tighten all joints securely.

Natural Gas Capacity of Pipe
In Cubic Feet of Gas Per Hour (CFH)

Length of Pipe in Feet	Nominal Black Pipe Size				
	1/2"	3/4"	1"	1 1/4"	1 1/2"
10	132	278	520	1050	1600
20	92	190	350	730	1100
30	73	152	285	590	980
40	63	130	245	500	760
50	56	115	215	440	670
60	50	105	195	400	610
70	46	96	180	370	560
80	43	90	170	350	530
90	40	84	160	320	490
100	38	79	150	305	460

(Pressure 0.5 psig or less and pressure drop of 0.3" W.C.; Based on 0.60 Specific Gravity Gas)

$$\text{CFH} = \frac{\text{BTUH Furnace Input}}{\text{Heating Value of Gas (BTU/Cubic Foot)}}$$

Table 8

- Connection method must be in compliance with all local and national codes. US: National Fuel Gas Code (NFGC) NFPA 54-2012/ANSI Z223.1-2012 and the Installation Standards, Warm Air Heating and Air Conditioning Systems ANSI/NFPA 90B.
  Connect the furnace to the building piping by one of the following methods:
  – Rigid metallic pipe and fittings.
  – Semi-rigid metallic tubing and metallic fittings.
  Aluminum alloy tubing must not be used in exterior locations. In order to seal the grommet cabinet penetration, rigid pipe must be used to reach the outside of the cabinet. A semi-rigid connector to the gas piping may be used from there.
- Use listed gas appliance connectors in accordance with their instructions. Connectors must be fully in the same room as the furnace.
- Protect connectors and semirigid tubing against physical and thermal damage when installed. Ensure aluminum-alloy tubing and connectors are coated to protect against external corrosion when in contact with masonry, plaster, or insulation, or subjected to repeated wetting by liquids such as water (except rain water), detergents, or sewage.

The gas piping may enter the left or right side of the furnace cabinet. The installer must supply following fittings starting from the gas valve.

- 1/2” dia x 2” long nipple
- 90 degree elbow
- Additional length of rigid piping enough to reach the outside of the cabinet
- Grounded joint union
- Drip leg
- Manual gas shut off valve

A semi-rigid connector to the gas piping can be used outside the cabinet per local codes. ½” NPT pipe and fittings are required. Model requires one 90 degree elbow, one 2” nipple and additional nipple to reach outside the cabinet.

A semi-rigid connector to the gas piping can be used outside the cabinet per local codes. From the elbow, the length of pipe and the fittings required will vary by the side chosen, location of union and cabinet width. The union may be placed inside or outside of the cabinet.

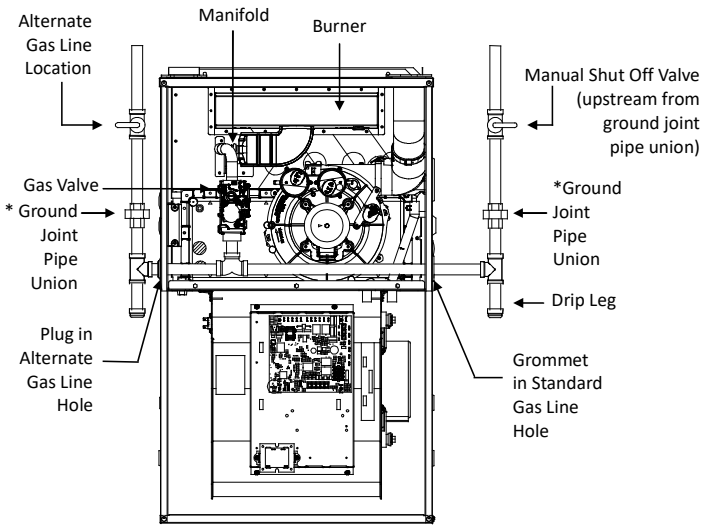

* NOTE: Union may be inside furnace cabinet where allowed by local codes.

Upflow
Figure 40

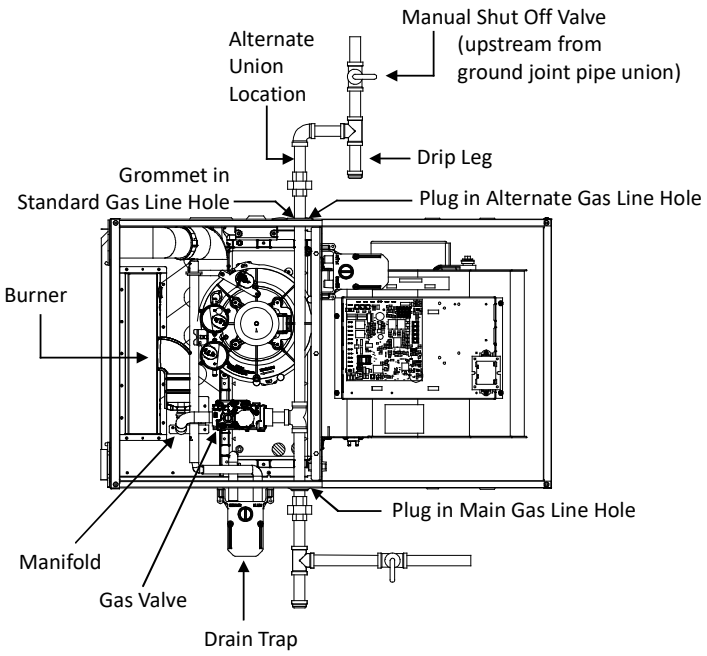

Upflow - Horizontal Left
Figure 41

Gas Piping Checks

WARNING

To avoid the possibility of explosion or fire, never use a match or open flame to test for leaks.

Before placing unit in operation, leak test the unit and gas connections.

Check for leaks using an approved chloride-free soap and water solution, an electronic combustible gas detector, or other approved testing methods.

CAUTION

To prevent possible property damage or personal injury due to fire, the following instructions must be performed regarding gas connections, pressure testing, location of shutoff valve and installation of gas piping.

NOTE: Never exceed specified pressures for testing. Higher pressure may damage the gas valve and cause subsequent overfiring, resulting in heat exchanger failure.

Disconnect this unit and shutoff valve from the gas supply piping system before pressure testing the supply piping system with pressures in excess of ½ psig (3.48 kPa).

Isolate this unit from the gas supply piping system by closing its external manual gas shutoff valve before pressure testing supply piping system with test pressures equal to or less than ½ psig (3.48 kPA).

WARNING

If the gas furnace is installed in a basement, an excavated area or confined space, it is strongly recommended to contact a certified contractor to install a gas detecting warning device in case of a gas leak.

CIRCULATING AIR & FILTERS

Duct Work - Air Flow

WARNING

Never allow the products of combustion, including carbon monoxide, to enter the return duct work or circulation air supply.

Duct systems and register sizes must be properly designed for the CFM and external static pressure rating of the furnace. Ductwork should be designed in accordance with the recommended methods of "Air Conditioning Contractors of America" Manual D.

Install the duct system in accordance with Standards of the National Board of Fire Underwriters for the Installation of Air Conditioning, Warm Air Heating and Ventilating Systems. Pamphlets No. 90A and 90B.

A closed return duct system must be used, with the return duct connected to the furnace. **NOTE:** Ductwork must never be attached to the back of the furnace. For upflow installations requiring 1800 CFM or more, use either two side returns or bottom return or a combination of side/bottom. Flexible joints may be used for supply and return connections to reduce noise transmission. To prevent the blower from interfering with combustion air or draft when a central return is used, a connecting duct must be installed between the unit and the utility room wall. Never use a room, closet, or alcove as a return air chamber.

Checking Duct Static

Refer to your furnace rating plate for the maximum ESP (external duct static) rating.

Total external static refers to everything external to the furnace cabinet. Cooling coils, filters, ducts, grilles, registers must all be considered when reading your total external static pressure. The supply duct pressure must be read between the furnace and the cooling coil. This reading is usually taken by removing the “A” shaped block off plate from the end on the coil; drilling a test hole in it and reinstalling the block off plate. Take a duct static reading at the test hole. Tape up the test hole after your test is complete. The negative pressure must be read between the filter and the furnace blower.

Too much external static pressure will result in insufficient air that can cause excessive temperature rise. This can cause limit switch tripping and heat exchanger failure.

To determine total external duct static pressure, proceed as follows;

1. With clean filters in the furnace, use a draft gauge (inclined manometer) to measure the static pressure of the return duct at the inlet of the furnace. (Negative Pressure)
2. Measure the static pressure of the supply duct. (Positive Pressure)
3. The difference between the two numbers is .4” w.c.

Example:
static reading from return duct = -.1” w.c.
static reading from supply duct = .3” w.c.
total external static pressure on this system = .4” w.c.

NOTE: Both readings may be taken simultaneously and read directly on the manometer if so desired. If an air conditioner coil or Electronic Air Cleaner is used in conjunction with the furnace, the readings must also include theses components, as shown in the following drawing.

4. Consult proper tables for the quantity of air.

If the total external static pressure exceeds the maximum listed on the furnace rating plate, check for closed dampers, registers, undersized and/or oversized poorly laid out duct work.

The temperature rise of the furnace must be within the temperature rise range listed on the furnace rating plate.

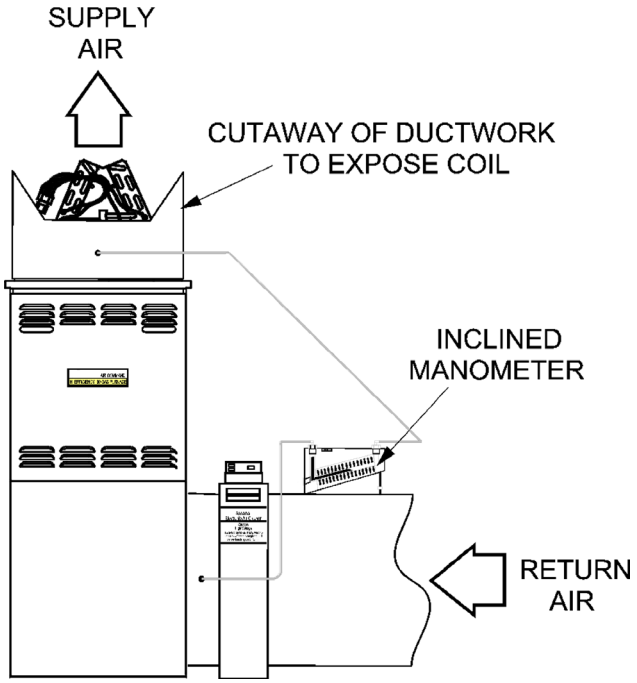

Checking Static Pressure
(80% Furnace Shown, 90% Similar)
Figure 42

WARNING

Edges of sheet metal holes may be sharp. Use gloves as a precaution when removing sheet metal from return air openings.

Bottom Return Air Opening [Upflow Models]

The bottom return air opening on upflow models utilizes a “lance and cut” method to remove sheet metal from the duct opening in the base pan. To remove, simply press out the lanced sections by hand to expose the metal strips retaining the sheet metal over the duct opening. Using tin snips, cut the metal strips and remove the sheet metal covering the duct opening. In the corners of the opening, cut the sheet metal along the scribe lines to free the duct flanges. Using the scribe line along the duct flange as a guide, unfold the duct flanges around the perimeter of the opening using a pair of seamer pliers or seamer tongs.

NOTE: Airflow area will be reduced by approximately 18% if duct flanges are not unfolded. This could cause performance issues and noise issues.

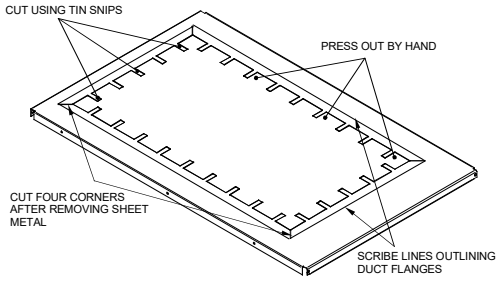

Duct Flange Cut Outs
Figure 43

When the furnace is used in connection with a cooling unit, the furnace should be installed in parallel with or on the upstream side of the cooling unit to avoid condensation in the heating element. With a parallel flow arrangement, the dampers or other means used to control the flow of air must be adequate to prevent chilled air from entering the furnace and, if manually operated, must be equipped with means to prevent operation of either unit unless the damper is in the full heat or cool position.

When the furnace is installed without a cooling coil, it is recommended that a removable access panel be provided in the outlet air duct. This opening shall be accessible when the furnace is installed and shall be of such a size that the heat exchanger can be viewed for visual light inspection or such that a sampling probe can be inserted into the airstream. The access panel must be made to prevent air leaks when the furnace is in operation.

NOTE: In a horizontal installation the air conditioning coil must be adequately supported by proper brackets and supports. Inadequate coil support can result in furnace cabinet distortion and air leakage.

When the furnace is heating, the temperature of the return air entering the furnace must be between 55°F and 100°F.

Filters - Read This Section Before Installing The Return Air Duct work

Filters must be used with this furnace. Discuss filter maintenance with the building owner. Filters do not ship with this furnace, but must be provided, sized and installed externally by the installer. Filters must comply with UL900 or CAN/ULCS111 standards. Damage or repairs due to the installation of the furnace without filters is not covered under the warranty.

On upflow units, guide dimples locate the side return cutout locations. Use a straight edge to scribe lines connecting the dimples. Cut out the opening on these lines. NOTE: An undersized opening will cause reduced airflow.

Refer to the Filter Sizing Chart to determine filter area requirements.

Filter Sizing Chart

Model	Minimum Recommended Filter Size^
DM96SC0603BU	1 - 16 X 25 Side or Bottom
DM96SC0805CU	1 - 20 X 25 Bottom/2 - 16 X 25 Side Return

^ Larger filters may be used, filters may also be centrally located.

Table 9

Change filters before occupants take ownership of a new home!

One of the most common causes of a problem in a forced air heating system is a blocked or dirty filter. Circulating air filters must be inspected monthly for dirt accumilation and replaced if necessary. Failure to maintain clean filters can cause premature heat exchanger failure. A new home may require more frequent replacement until all construction dust and dirt is removed. Circulating air filters are to be installed in the return air duct external to the furnace cabinet. Consider installing an air cleaner with deep-pleated media filter at the time of furnace installation. A deep-pleated filter with a MERV rating of 8 (minimum) will often provide better filtration to protect equipment and the air distribution system than a standard 1” filter and often has lower static pressure loss than a 1” filter. Also a deep-pleated filter will typically require less frequent replacement intervals. Avoid using highly restrictive 1” filters which produce static pressure loss greater than .25” W.C. In some installations the minimum filter size required (consult filter sizing chart above) will not lend itself to a filter installation on the side of the furnace. The installation of a centrally installed air cleaner cabinet or a return duct filter installation may offer more practicality.

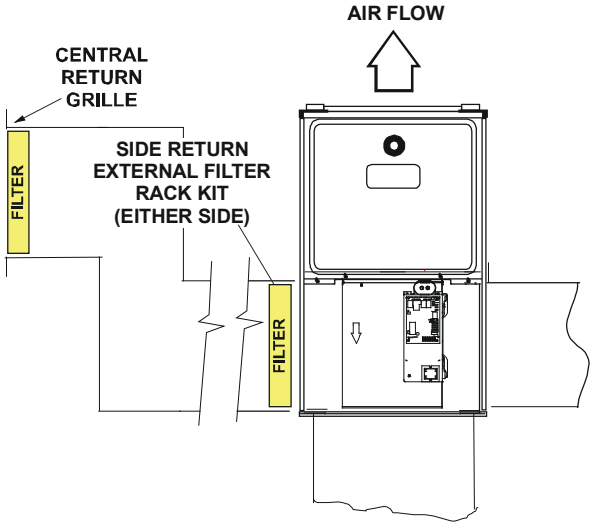

Possible Upright Upflow
Figure 44

Horizontal Installations

Filters must be installed in either the central return register or in the return air duct work.

The Daikin MERV 15 air cleaner is available in the following configurations. Treats home air for airborne particulate matter found in the home. The high efficiency MERV 15 media filter removes more than 85% of particles down to 0.3 microns in size at 492 fpm.

Visit www.daikincomfort.com for more information on our complete line of Daikin AIQ products.

Gas Supply Pressure Measurement
Gas Pressure Test

CAUTION

To prevent unreliable operation or equipment damage, the inlet gas supply pressure must be as specified on the unit rating plate with all other household gas fired appliances operating.

The line pressure supplied to the gas valve must be within the range specified on Table 7 on page 27. The supply pressure can be measured at the gas valve inlet pressure tap or at a hose fitting installed in the gas piping drip leg. The supply pressure must be measured with the burners operating. To measure the gas supply pressure, use the following procedure.

1. Turn OFF gas to furnace at the manual gas shutoff valve external to the furnace. Back inlet pressure test port screw turn counter clockwise, not more than one turn.
2. Connect a calibrated water U tube manometer (or appropriate gas pressure gauge) at either the gas valve inlet pressure tap or the gas piping drip leg. See White-Rodgers 36J22Y-204 gas valve figure below for location of inlet pressure tap.

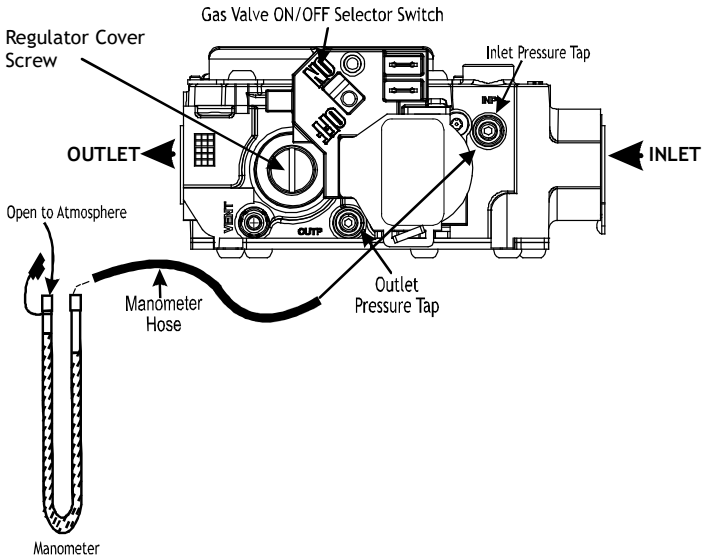

White-Rodgers Model 36J22Y-204 Connected to Manometer
Figure 45

NOTE: If measuring gas pressure at the drip leg, a field-supplied hose barb fitting must be installed prior to making the hose connection. If using the inlet pressure tap on the White-Rodgers 36J22 gas valve, then use the 36G/J Valve Pressure Check Kit, Part No. 0151K00000S.

3. Turn ON the gas supply and operate the furnace and all other gas consuming appliances on the same gas supply line.
4. Measure furnace gas supply pressure with burners firing. Supply pressure must be within the range specified in the Inlet Gas Supply Pressure table 7, on page 27.
   If supply pressure differs from table, make the necessary adjustments to pressure regulator, gas piping size, etc., and/or consult with local gas utility.
5. Turn OFF gas to furnace at the manual shutoff valve and disconnect manometer. Reinstall plug and tighten as needed before turning on gas to furnace.
6. Turn OFF any unnecessary gas appliances stated in step 3.

Specifications							
MODEL	**DV15-2117-AB**	**DV15-2121-AC**	**DV15-2124-AD**	**DV15-2814-FA**	**DV15-2817-FB**	**DV15-2821-FC**	**DV15-2824-FD**
Airflow - up to maximum rated flow	Up to 1200 cfm (2039 m^3/h)	Up to 1600 cfm (2718 m^3/h)	Up to 1800 cfm (3058 m^3/h)	Up to 1200 cfm (2039 m^3/h)	Up to 1600 cfm (2718 m^3/h)	Up to 2000 cfm (3398 m^3/h)	Up to 2000 cfm (3398 m^3/h)
Duct Size	21 x 17 in (53 x 43 cm)	21 x 21 in (53 x 53 cm)	21 x 24 in (53 x 61 cm)	28 x 14 in (71 x 36 cm)	28 x 17 in (71 x 43 cm)	28 x 21 in (71 x 53 cm)	28 x 24 in (71 x 61 cm)
Pressure Drop* (Filter Only)	0.09 in. w.g. @ 600 cfm	0.09 in. w.g. @ 800 cfm	0.09 in. w.g. @ 900 cfm	0.08 in. w.g. @ 600 cfm	0.08 in. w.g. @ 800 cfm	0.08 in. w.g. @ 1000 cfm	0.06 in. w.g. @ 1000 cfm
	0.26 in. w.g. @ 1200 cfm	0.29 in. w.g. @ 1600 cfm	0.25 in. w.g. @ 1800 cfm	0.25 in. w.g. @ 1200 cfm	0.24 in. w.g. @ 1600 cfm	0.22 in. w.g. @ 2000 cfm	0.17 in. w.g. @ 2000 cfm
MERV Rating*	15	15	15	15	15	15	15

Notes:
1. Installation with units with ECM motors recommended.
2. Two filters should be considered for any airflow rates above maximum rated flow or when duct pressure loss is excessive.

Furnace Size	A	B	C	D
Furnace Riser	AMP-BSRB-2814	AMP-BSRB-2817	AMP-BSRB-2821	AMP-BSRB-2824

When using a furnace riser use DV15-2824-FD on all size furnaces

MERV Rating 15 - Minimum Filtration Efficiency @492 fpm: • E1 85% (0.3 - 1.0 micron) • E2 90% (1.0 - 3.0 microns) • E3 95% (3.0 - 10.0 microns)

*Independent testing performed by LMS Technologies, Inc.

Furnace Riser

Dimensions (in)								
MODEL	**A**	**B1**	**B2**	**C**	**D**	**E**	**F**	**G**
DV15-2117-AB	17.5	21.1	21.7	1.4	0.8	1.3	14.7	19.4
DV15-2121-AC	21.0	21.1	21.7	1.4	0.8	1.3	18.2	19.4
DV15-2124-AD	24.5	21.1	21.7	1.4	0.8	1.3	21.7	19.4
DV15-2814-FA	14.0	28.0	28.6	0.8	0.8	3.8	12.5	23.9
DV15-2817-FB	17.5	28.0	28.6	0.8	0.8	3.8	16.0	23.9
DV15-2821-FC	21.0	28.0	28.6	0.8	0.8	3.8	19.5	23.9
DV15-2824-FD	24.5	28.0	28.6	0.8	0.8	3.8	23.0	23.9

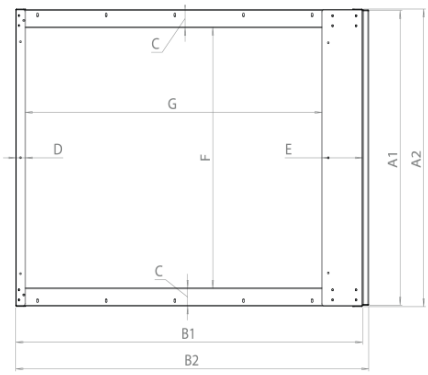

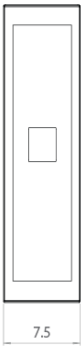

Replacement Media Filters

Air Cleaner Model [1]	Replacement Filter Part[2]
DV15-2117-AB	0160M00013
DV15-2121-AC	0160M00014
DV15-2124-AD	0160M00015
DV15-2814-FA	0160M00016
DV15-2817-FB	0160M00017
DV15-2821-FC	0160M00018
DV15-2824-FD	0160M00019

Filter should be changed once or twice a year based on conditions within the home.
[1]EPA EST. NO. 073316-TEX-001 • [2]EPA EST. NO. 71027-MEX-001

Filter Match-up Options

Air Handler Filter Options		
Air Handler Size	Bottom/Top Return	Plenum Return
B	21x17	21x21
C	21x21	21x24
D	21x24	21x24

Furnace Filter Options			
Furnace Size	Bottom/Top Return	Side Return	Side Return with Furnace Riser
A	28x14	28x17	28x24
B	28x17	28x17	28x24
C	28x21	(2) 28x17	28x24
D	28x24	(2) 28x17	28x24

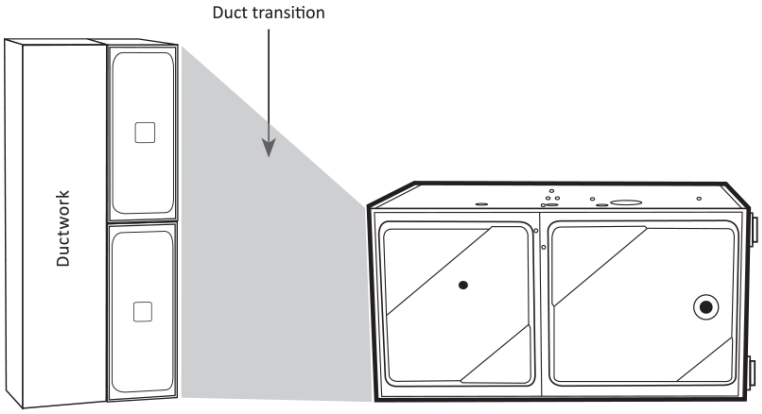

Duct transition for side flow dual filter installation furnace/air handler application

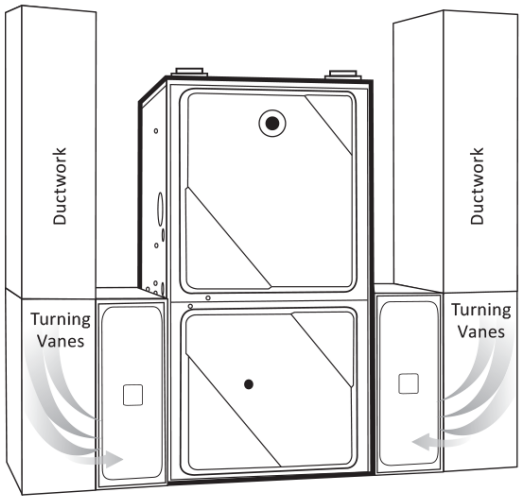

Dual filter furnace application, side return (For any side return on a furnace <u>without a furnace riser</u>, use one DV15-2817-FB on A & B or two DV15-2817-FB on C & D furnace sizes)

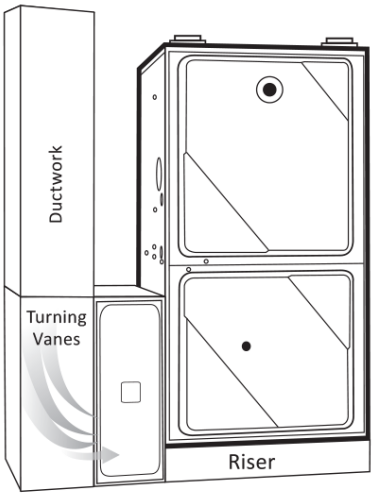

Single filter furnace application, side return with furnace riser (When using a furnace riser, use DV15-2824-FD on all furnace sizes)

Furnace Riser

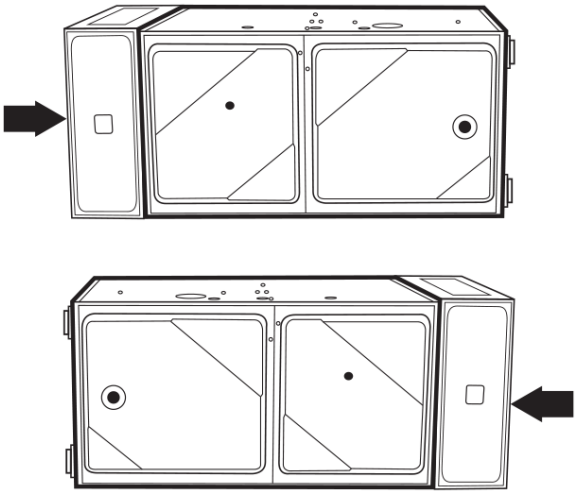

HL/HR furnace/airhandler application

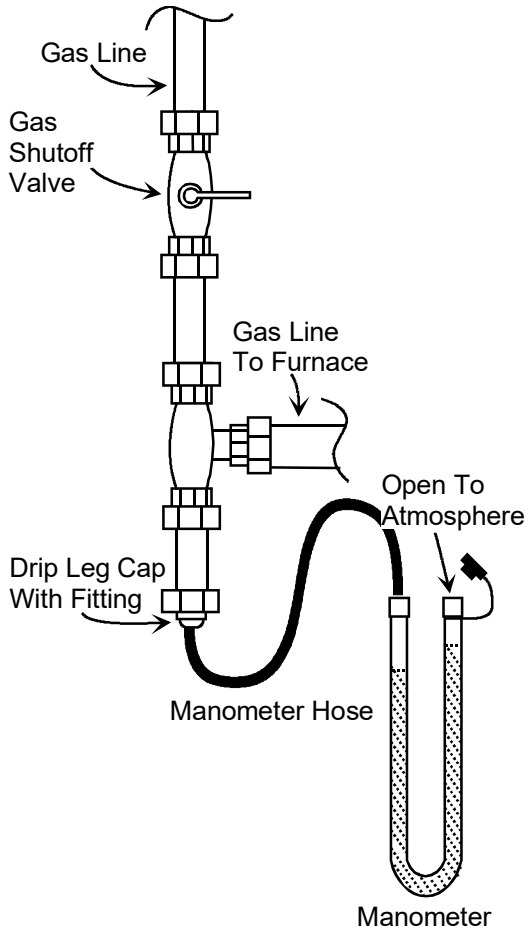

Measuring Inlet Gas Pressure (Alt. Method)
Figure 46

Gas Manifold Pressure Measurement and Adjustment

Only small variations in gas pressure should be made by adjusting the gas valve pressure regulator. The manifold pressure must be measured with the burners operating. To measure and adjust the manifold pressure, use the following procedure.

1. Turn OFF gas to furnace at the manual gas shutoff valve external to the furnace.
2. Turn off all electrical power to the system.
3. Outlet pressure tap connections:
   White-Rodgers 36J22 valve: Back outlet pressure test screw (outlet pressure tap) out one turn (counterclockwise, not more than one turn).
4. Connect calibrated U tube manometer (or appropriate pressure gauge) at the gas valve outlet pressure tap. See White-Rodgers 36J22Y-204 gas valve Figure 45 for location of outlet pressure tap.
5. Turn ON the gas supply.
6. Turn on power and close thermostat “R” and “W” contacts to provide a call for heat.
7. Measure the gas manifold pressure with burners firing. Adjust manifold pressure using the Manifold Gas Pressure table 10 shown below.

Manifold Gas Pressure		
Gas	**Range**	**Nominal**
Natural	2.8 - 3.2" w.c.	3.0" w.c.

Table 10

8. Remove regulator cover screw from the outlet pressure regulator adjust tower and turn screw clockwise to increase pressure or counterclockwise to decrease pressure. Replace regulator cover screw.
9. Turn off all electrical power and gas supply to the system.
10. Remove the manometer hose from the hose barb fitting or outlet pressure tap.
11. Replace outlet pressure tap: White-Rodgers 36J22 valve: Turn outlet pressure test screw in to seal pressure port (clockwise, 7 in-lb minimum).
12. Turn on electrical power and gas supply to the system.
13. Close thermostat contacts “R” and “W” to energize the valve.

Using a leak detection solution or soap suds, check for leaks at outlet or screw (White-Rodgers valve). Bubbles forming indicate a leak. SHUT OFF GAS AND REPAIR ALL LEAKS IMMEDIATELY!

CAUTION

To prevent unreliable operation or equipment damage, the inlet gas supply pressure must be as specified on the unit rating plate with all other household gas fired appliances operating.

Gas Input Rate Measurement (Natural Gas Only)

The actual gas input rate to the furnace must never be greater than that specified on the unit rating plate. To measure natural gas input using the gas meter, use the following procedure.

1. Turn OFF the gas supply to all other gas-burning appliances except the furnace.
2. While the furnace is operating at high fire rate, time and record one complete revolution of the gas meter dial, measuring the smallest quantity, usually the dial that indicates 1/2 cu. ft. per revolution. You will use this number to calculate the quantity of gas in cubic ft. if the furnace would consume if it ran steadily for one hour (3600 seconds).
3. If the 1/2 cu. ft. dial was used, multiply your number x 2.

EXAMPLE: If it took 23 seconds to complete one revolution of the 1/2 ft. dial (23 x 2 = 46).

This tells us that at this rate, it would take 46 seconds to consume one cu. ft. of gas.

This tells us that in one hour, the furnace would consume 78 cu. ft. of gas. (3600 / 46 = 78)

The typical value range for 1 cu. ft. of natural gas is around 1025 BTU. Check with your gas utility, if possible. In this example, the furnace is consuming 80,000 BTUH.

NOTE: The final manifold pressure cannot vary by more than ± 0.2" w.c. for Natural gas from the specified setting. Consult your local gas supplier if additional input rate adjustment is required.

4. Turn ON gas to and relight all other appliances turned off in step 1. Be certain that all appliances are functioning properly and that all pilot burners (if applicable) are operating.

Temperature Rise

Air temperature rise is the temperature differench between supply and return air. The proper amount of temperature rise is usually obtained when the unit is operated at the rated input with the "as shipped" blower speed. If the correct amount of temperature rise is not obtained, it may be necessary to change the blower speed.

Temperature rise must be within the range specified on the unit rating plate. An incorrect temperature rise may result in condensing in or overheating of the heat exchanger.

Determine and adjust temperature rise as follows:

1. Operate furnace with burners firing for approximately ten minutes. Ensure all registers are open and all duct dampers are in their final (fully or partially open) position.
2. Place thermometers in the return and supply ducts as close to the furnace as possible. Thermometers must not be influenced by radiant heat by being able to "see" the heat exchanger.
3. Subtract the return air temperature from the supply air temperature to determine the air temperature rise. Allow adequate time for thermometer readings to stabilize.
4. Adjust temperature rise by adjusting the circulator blower speed. Increase blower speed to reduce temperature rise. Decrease blower speed to increase temperature rise. Refer to Startup Procedure and Adjustment -Circulator Blower Speeds for speed changing details.

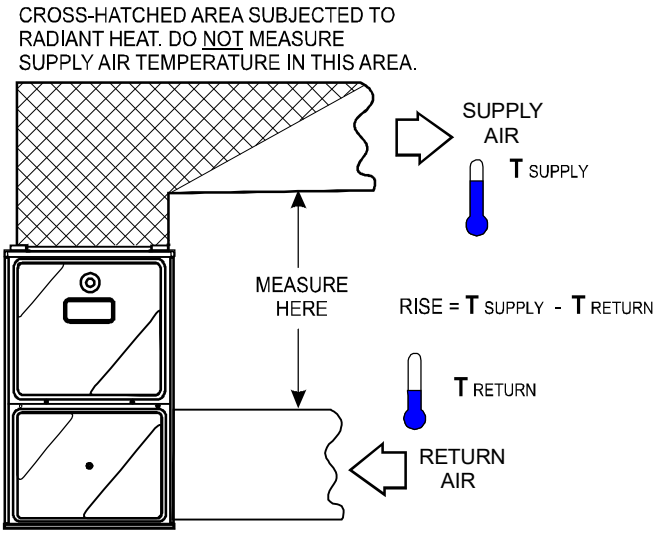

Temperature Rise Measurement
Figure 47

OPERATIONAL CHECKS
SAFETY CIRCUIT DESCRIPTION

CAUTION

To avoid personal injury or death, do not remove internal compartment covers or attempt any adjustment. Electrical components are contained in both compartments. Contact a qualified service agent at once if an abnormal operation should develop.

A number of safety circuits are employed to ensure safe and proper furnace operation. These circuits serve to control any potential safety hazards and serve as inputs in the monitoring and diagnosis of abnormal function. These circuits are continuously monitored during furnace operation by the integrated control module.

Integrated Control Module

The integrated control module is an electronic device which, if a potential safety concern is detected, will take the necessary precautions and provide diagnostic information through an LED.

Primary Limit

The primary limit control is located on the partition panel and monitors heat exchanger compartment temperatures. It is a normally-closed (electrically), automatic reset, temperature-activated sensor. The limit guards against overheating as a result of insufficient conditioned air passing over the heat exchanger.

Auxiliary Limit
The auxiliary limit controls are located on or near the circulator blower and monitors blower compartment temperatures. They are a normally-closed (electrically), manual-reset sensors. These limits guard against overheating as a result of insufficient conditioned air passing over the heat exchanger.

Burner Temperature Switch
The burner temperature switch is mounted on the burner assembly to monitor the burner box temperature. It is normally closed (electrically), auto-reset sensor. This switch guards against the burner flames not being properly drawn into the heat exchanger.

Pressure Sensor
Pressure sensor is mounted on the induced draft blower. Its function is to regulate the induced draft blower's speed in order to maintain proper air-fuel ratio for clean and reliable combustion.

Pressure Switches
The pressure switches are normally-open (closed during operation) negative air pressure-activated switches. They monitor the airflow (combustion air and flue products) through the heat exchanger via pressure taps located on the induced draft blower and the coil front cover. These switches guard against insufficient airflow (combustion air and flue products) through the heat exchanger and/or blocked condensate drain conditions.

Flame Sensor
The flame sensor is a probe mounted to the burner assembly which uses the principle of flame rectification to determine the presence or absence of flame.

TROUBLESHOOTING

Troubleshooting Chart
Refer to the Troubleshooting Codes chart for assistance in determining the source of unit operational problems.

MAINTENANCE

WARNING

High Voltage!
To avoid personal injury or death due to electrical shock, disconnect electrical power BEFORE performing any service or maintenance.

Annual Inspection
The furnace should be inspected by a qualified installer, or service agency at least once per year. This check should be performed at the beginning of the heating season. This will ensure that all furnace components are in proper working order and that the heating system functions appropriately. Pay particular attention to the following items. Repair or service as necessary.

- Flue pipe system: Check for blockage and/or leakage. Check the outside termination and the connections at and internal to the furnace.
- Heat exchanger: Check for corrosion and/or buildup within the heat exchanger passageways.
- Burners: Check for proper ignition,and flame sense.
- Drainage system: Check for blockage and/or leakage. Check hose connections at and internal to furnace.
- Wiring: Check electrical connections for tightness and/or corrosion. Check wires for damage.
- Filters: Check for Blockage

FILTERS

Filter Maintenance
A return air filter is not supplied with this furnace; however, there must be a means of filtering all of the return air. The installer will supply filter(s) at the time of installation.

Improper filter maintenance is the most common cause of inadequate heating or cooling performance. Filters should be cleaned (permanent) or replaced (disposable) every two months or as required.

Burner

WARNING

To prevent personal injury or death, do not remove any internal compartment covers or attempt any adjustment. Electrical components are not contained in both compartments. Contact a qualified service agent at once if an abnormal flame appearance should develop.

The Ultra Low NOx furnace uses a premix burner. The burner box is sealed to achieve safe and reliable operation.

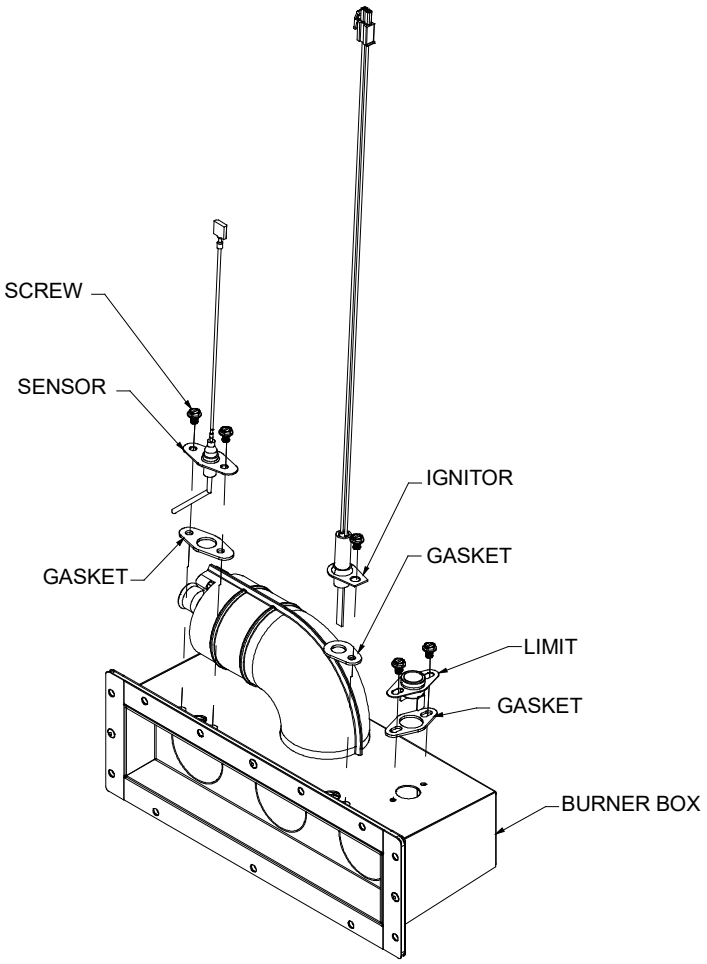

Burner Box
Figure 48

NOTE: Location of flame sensor, igniter and burner limit switch may vary depending on the model.

Induced Draft and Circulator Blowers
The bearings in the induced draft blower and circulator blower motors are permanently lubricated by the manufacturer. No further lubrication is required. Check motor windings for accumulation of dust which may cause overheating. Clean as necessary.

Condensate Trap and Drain System (Qualified Servicer Only)
Annually inspect the drain tubes, drain trap, and field-supplied drain line for proper condensate drainage. Check drain system for hose connection tightness, blockage, and leaks. Clean or repair as necessary.

Flame Sensor (Qualified Servicer Only)
Under some conditions, the fuel or air supply can create a nearly invisible coating on the flame sensor. This coating acts as an insulator causing a drop in the flame sense signal. If the flame sense signal drops too low the furnace will not sense flame and will lock out. The flame sensor should be carefully cleaned by a qualified servicer using emery cloth or steel wool. Following cleaning, the flame sense signal should be above 3 micro amps.

Flue Passages (Qualified Servicer Only)
The heat exchanger flue passageways should be inspected at the beginning of each heating season.

BEFORE LEAVING AN INSTALLATION

- Cycle the furnace with the thermostat at least three times. Verify cooling and fan only operation.
- Review the Owner's Manual with the homeowner and discuss proper furnace operation and maintenance.
- Leave literature packet near furnace.

REPAIR AND REPLACEMENT PARTS

- When ordering any of the listed functional parts, be sure to provide the furnace model, manufacturing, and serial numbers with the order.
- Although only functional parts are shown in the parts list, all sheet metal parts, doors, etc. may be ordered by description.
- Parts are available from your distributor.

Functional Parts List-

Gas Valve	Blower Motor
Gas Manifold	Blower Wheel
Natural Gas Orifice	Blower Mounting Bracket
Igniter	Blower Cutoff
Flame Sensor	Blower Housing
Burner Temperature Switch	Pressure Switches
Primary Limit Switch	Burner Assembly
Coil Front Cover	Drain Trap
Auxiliary Limit Switch	Burner Box Gasket
Transformer	Integrated Control Module
Door Switch	Pressure Sensor
Induced Draft Blower	
Heat Exchanger with Recuperator Coil	

Menu Options

LED Display	Menu Description
ASE	Aux (condensate switch enabled)
bSt	Enable or disable inverter boost operation. (compressor speed may increase when this feature is on) (inverter only)
btt	Boost mode will operate above this selected temperature. On = boost mode always on (default = 105°F) (inverter only)
CAP	Cooling Airflow Profile setting (default = profile D shown as 4)
CbP	Heat Pump compressor lockout temperature. Furnace will act as primary heat source below this temperature. (Default = 45°F)
CdL	Compressor off delay at the beginning and end of a defrost cycle. (default = 30 seconds)
CFd	Cooling Airflow Off Delay Time. (default = 60 seconds)
CLr	Resets all cooling settings to a factory default
Cnd	Cooling Airflow On Delay Time (default = 5 seconds)
Cr	Control Firmware Revision Number
CrG	Enable or disable inverter charge mode
CrP	Select the range that includes the desired compressor RPS for inverter cooling operation. See inverter manual for menu options
CrS	Maximum Compressor RPS for cooling mode (inverter only)
CSt	Percentage of high stage cooling airflow to run during low stage operation (default = 70%)
CtF	Cooling Airflow Trim (default 0%)
CtH	High Cooling Airflow Trim for inverter units. See inverter manual for menu options and defaults
Ct I	Intermediate Cooling Airflow Trim for inverter units. See inverter manual for menu options and defaults
CtL	Low Cooling Airflow Trim for inverter units. See inverter manual for menu options and defaults
dF	Compressor run time between defrost cycles. (default = 30 minutes) (2 stage units)
dHE	Enables or disables dehumidification feature in the outdoor unit (default = Enabled)
dHL	Select "1" to enable dehumidification when the thermostat DH terminal is energized. Select "0" to enable dehumidification when the thermostat DH terminal is de-energized (default = 1)
FCL	View 6 most recent fault codes and Clear Fault Codes if desired (outdoor communicating units)
FdF	Force system into a defrost cycle (inverter units)
FSd	Constant Fan Speed as percent of maximum airflow (Default = 25%)
GFd	Gas Heat Fan Off Delay (default = 90 seconds)
Gnd	Gas Heat Fan On Delay (default = 30 seconds)
GSt	Percentage of high stage gas heating airflow to run during low stage gas heat operation (default = 70%)
GH	Gas Heat

LED Display	Menu Description
GtF	Gas Heat Airflow Trim (default = 0%)
Hdi	Maximum Compressor Run Time Between Defrost Cycles (default = 120 minutes)
HFd	Heat Pump Heating Airflow Off Delay Time (default = 60 seconds)
Hnd	Heat Pump Heating Airflow On Delay Time (default = 5 seconds)
HrP	Select the range that includes the desired compressor RPS for inverter heating operation. See inverter manual for menu options
HrS	Maximum Compressor RPS for Heating Mode (inverter only)
Hrt	Reset all heat pump heating settings to factory default.
HSt	Percentage of high stage heat pump heating airflow to run during low stage operation. (default = 70%)
HtF	Heat Pump Indoor Airflow Trim (default = 0%)
HtH	High Heating Airflow Trim for Inverter Units. See inverter manual for menu options and defaults
Hti	Intermediate Heating Airflow Trim for Inverter Units. See inverter manual for menu options and defaults
HtL	Low Heating Airflow Trim for Inverter Units. See inverter manual for menu options and defaults
LGF	View 6 most recent fault codes and clear all fault codes if desired. (furnace)
Lrn	Restart communications between the indoor and outdoor unit.
OdS	Select the number of stages for the non-communicating outdoor unit. Default = OFF meaning no outdoor unit.
PPd	Enable Pump Down Mode
rFd	Resets furnace settings to factory defaults.
SCt	Maximum Current Option (system will limit capacity to percentage of maximum current) (default = 100%)
Sr	Control Shared Data Revision Number
Srt	Resets all outdoor unit settings to factory defaults.
SVt	System Verification Test (inverters only)
ton	Indoor Airflow for non-communicating outdoor units. (values based on 400CFM per ton) (default = 3.0 Ton)
Utr	Select Outdoor Unit Elevation (SL=same level, OL = outdoor lower, IL = indoor lower) Default = Outdoor Lower
CFS	1 = system will try to satisfy the thermostat quickly. 5 (default) = system will try to satisfy the thermostat more slowly.
tGt	Menu is enabled if the CFS menu is set to 6. Select the target time the system will attempt to satisfy the thermostat.
SUP	Menu is enabled if the CFS menu is set to 6. Select the percentage past the target time when the system will transition to gas furnace operation during heat mode.
Ott	Menu is enabled if the CFS is set to 6. (the gas furnace will run during the next heat call if the heat pump fails to satisfy the custom target time for this number of consecutive cycles) (default = 20 cycles)
Utt	Menu is enabled if the CFS menu is set to 6. (if low stage gas heat is able to consecutively satisfy the thermostat under the set target time for this number of cycles, the system will transition to the heat pump for primary heating)
SdP	Menu is enabled if the CFS menu is set to 6. (this percentage will help determine when switching back to heat pump operation is appropriate. Default = 20%. If target time = 20 minutes, low stage furnace operation must satisfy the thermostat by less than 16 minutes. (target time - 20% default = 16 minutes).

Status Codes

LED Display	Description of System Status
1AC	Compressor Cooling, Low Stage (non-communicating units)
2AC	Compressor Cooling, High Stage (non-communicating units)
1AC	Compressor Heat, Low Stage (non-communicating units)
2AC	Compressor Heat, High Stage (non-communicating units)
AC	Compressor Cooling, Single-Stage (single stage non-comm. units)
AC 1	Compressor Cooling, Low Stage (communicating units)
AC2	Compressor Cooling, High Stage (communicating units)
dHU	Dehumidification
FAn	Constant Fan
HP	Compressor Heat, Single-Stage (single stage non-comm. units)
HP 1	Compressor Heat, Low Stage (Communicating Units)
HP2	Compressor Heat, High Stage (Communicating Units)
I dL	Idle
uAC	Inverter Cooling
uHP	Inverter Heating
dFt	Defrost
GH	Gas Heat

Troubleshooting Chart

Symptom	LED Status	Fault Description	Corrective Actions
	d0	Equipment lacks shared data	Populate shared data set using memory card
	I dL	Normal operation	None
Furnace fails to operate Integrated control module LED display provides no signal	None	No 115 power to furnace or no 24 volt power to integrated control module Blown fuse or tripped circuit breaker Integrated control module is non-functional	Restore high voltage power to furnace and integrated control module. Replace non-functional integrated control module.
Furnace fails to operate	Eb0	Circulator blower motor is not running when it should be running	Tighten or correct wiring connection Verify continuous circuit through inductor Replace if open or short circuit Check circulator blower motor, replace if necessary
Furnace fails to operate	Eb I	Integrated control module has lost communications with circulator blower motor	Tighten or correct wiring connection Check circulator blower motor. Replace if necessary Check integrated control module, replace if necessary
Furnace fails to operate	Eb2	Circulator blower motor horse power in shared data set does not match circulator blower motor horse power.	Verify circulator blower motor horse power match with nameplate, replace if necessary Verify shared data set is correct for the specific model, re-populate data using correct memory card if required
Furnace operates at reduced performance Airflow delivered is less than expected	Eb3	Circulator blower motor is operating in a power, temperature, or speed limiting condition	Check filters for blockage, clean filters or remove obstruction Check ductwork for blockage and verify all registers are fully open Verify ductwork is appropriately sized for system, resize and/or replace ductwork if necessary
Furnace fails to operate	Eb4	Circulator blower motor senses a loss of rotor control Circulator blower motor senses high current	Check filters, filter grille, registers, duct system and equipment inlet/outlet for blockage, make necessary corrections and retest
Furnace fails to operate	Eb5	Circulator blower motor fails to start 10 consecutive times	Check circulating blower for obstructions Repair or replace blower motor or wheel as required Check circulating blower shaft for proper rotation
Furnace fails to operate	Eb6	Circulator blower motor shuts down for over or under voltage condition Circulator blower motor shuts down due to over temperature condition on power module	Check voltage to furnace and verify within nameplate specified range
Furnace fails to operate	Eb7	Circulator blower motor lacks information to operate properly Motor fails to start 40 consecutive times	Check for locked rotor condition Check integrated control module and verify it is populated with the correct shared data

Troubleshooting Chart

Symptom	LED Status	Fault Description	Corrective Actions
Furnace operates at reduced performance or operates on low stage when high stage is expected	Eb9	Airflow is lower than demanded	Check filters for blockage, clean filters or remove obstruction Check ductwork for blockage, remove obstruction and verify all registers are fully open Verify ductwork is appropriately sized for system, resize and/or replace ductwork if necessary
Furnace fails to operate	E 1b	Analog Pressure Sensor Reference Error. APS reference is out of the range (5.0+/-0.2)V for 5 seconds	Verify electrical connections to pressure sensor
Furnace fails to operate	E 1c	Analog Pressure Sensor Null Error. Inconsistent Pressure reading with inducer OFF	Verify electrical connections to pressure sensor
Furnace fails to operate	E 1d	Analog Pressure Sensor Span Error. Inconsistent pressure reading with inducer ON	Verify electrical connections to pressure sensor
Furnace fails to operate	E 1E	Analog Pressure Error (Blocked Vent Error)	Need to check the APS Sensor or its connection if this error is occurred. The failure conditions occur as per the following for 5 seconds: 1. The vent is blocked, and the pressure could not reach (lower than) the target pressure when inducer stayed at maximum RPM which stored in Shared Data. 2. The vent is blocked, and the pressure could not reach (higher than) the target pressure when inducer stays at the minimum RPM (Pressure Switch Min Limit). 3. APS fault causes the pressure fixed at a value lower than the target pressure when inducer stayed at maximum RPM which stored in Shared Data. 4. APS fault causes the pressure fixed at a value higher than the target pressure when inducer stayed at minimum RPM (Pressure Switch Min Limit).
Furnace fails to Operate	E 1F	Analog Pressure Sensor, Input Error	Check the APS Sensor or its connection if this error is occurred. APS input voltage is out of the below ranges for 5 seconds. 1. If 2" is selected, the voltage range shall be from (0.25-0.06)V to (4+0.06)V. 2. If 4" is selected, the voltage range shall be from (0.5-0.06)V to (4.5+0.06)V.

Troubleshooting Chart

Symptom	LED Status	Fault Description	Corrective Actions
Furnace fails to operate	E 10	Grounding fault Poor neutral connection	Verify neutral wire connection to furnace & continuity to ground source
Furnace fails to operate	E 11	Open roll out switch	Check for correct gas pressure Check for correct burner alignment Check for and correct burner restriction
Furnace fails to operate	EdO	Data not yet on network	Populate shared data set using memory card
Operation different than expected or no operation	Ed 1	Invalid memory card data	Verify shared data set is correct for the specific model, re-populate data using correct memory card if required
Furnace fails to operate	EEO	Furnace lockout due to an excessive number of ignition "retries" (3 total) Failure to establish flame Loss of flame after establishment	Locate and correct gas interruption Check front cover pressure switch operation and verify proper drainage (hose, wiring, contact operation), correct if necessary Replace or realign igniter Check flame sense signal, sand sensor if coated and/or oxidized Check flue piping for blockage, proper length, elbows, and termination Verify proper induced draft blower performance
Furnace fails to operate	EE 1	Low stage pressure switch circuit is closed at start of heating cycle Low stage pressure switch contacts sticking Short in pressure switch circuit wiring	Replace low stage pressure switch Repair short in wiring
Induced draft blower runs continuously with no furnace operation	EE2	Low stage pressure switch circuit is not closed Pressure switch hose blocked pinched, or connected improperly Blocked flue and/or inlet air pipe, blocked drain system or weak induced draft blower Incorrect pressure switch set point or malfunctioning switch contacts Loose or improperly connected wiring	Inspect pressure switch hose, repair/replace if necessary Inspect flue and/or inlet air piping for blockage, proper length, elbows, and termination Check drain system, correct as necessary Check induced draft blower performance, correct as necessary Check pressure switch operation, replace as needed Tighten or correct wiring connection
Circulator blower runs continuously No furnace operation	EE3	Primary limit circuit is open Insufficient conditioned air over the heat exchanger Blocked filters, restrictive ductwork, improper circulator blower speed, or failed circulator blower motor Loose or improperly connected wiring in high limit circuit	Check filters and ductwork for blockage Clean filters or remove obstruction Check circulator blower speed and performance Correct speed or replace blower motor if necessary Tighten or correct wiring connection

Troubleshooting Chart

Symptom	LED Status	Fault Description	Corrective Actions
Induced draft blower and circulator blower runs continuously No furnace operation	EE4	Flame sensed with no call for heat Short to ground in flame sense circuit Lingering burner flame Slow closing gas valve	Correct short at flame sensor or in flame sensor wiring Check for lingering or lazy flame Verify proper operation of gas valve
No furnace operation	EE5	Open fuse Short in low voltage wiring	Replace fuse Locate and correct short in low voltage wiring
Normal furnace operation	EE6	Flame sense micro amp signal is low Flame sensor is coated/oxidized Flame sensor incorrectly positioned in burner fame Lazy burner flame due to improper gas pressure or combustion air	Clean flame sensor if coated or oxidized Inspect for proper flame sensor alignment Check inlet air piping for blockage, proper length, elbows, and termination Compare current gas pressure to rating plate and adjust as needed
Furnace fails to operate	EE7	Problem with igniter circuit Improperly connected or shorted igniter Poor unit ground Igniter relay fault on integrated control module	Check and correct wiring from integrated control module to igniter Diagnose and replace shorted igniter as needed Verify and correct unit ground wiring if needed Check igniter output from control, replace if necessary
Furnace fails to operate on high stage; furnace operates normally on low stage Induced draft blower operating	EE8	High stage pressure switch circuit is closed at start of heating cycle. High stage pressure switch contacts sticking Shorts in pressure switch circuit wiring	Diagnose and replace high stage pressure switch if needed Repair short in wiring
Furnace fails to operate on high stage; furnace operates normally on low stage Induced draft blower operating	EE9	High stage pressure switch circuit is not closed Furnace is operating on low stage only	Inspect pressure switch hose, repair/replace if necessary Inspect flue and/or inlet air piping for blockage, proper length, elbows, and termination Check drain system, correct as necessary Check induced draft blower performance, correct as necessary Tighten or correct wiring connection
Furnace fails to operate	EEA	Polarity of 115 volt AC is reversed Poor unit ground	Correct polarity, check and correct wiring if necessary Verify proper ground, correct if necessary
Furnace fails to operate	EEb	Gas valve is not energized when it should be External Gas Valve Error	Check wiring in gas valve circuit Replace integrated control board
Furnace fails to operate	EEC	Gas valve is energized when it should not be Internal gas valve error	Check wiring in gas valve circuit Replace integrated control board

Troubleshooting Chart

Symptom	LED Status	Fault Description	Corrective Actions
Furnace fails to operate	EEd	Aux limit switch open (blower compartment)	Check filters and ductwork for blockage, clean filters or remove obstruction Check circulator blower speed and performance, correct speed or replace blower motor if necessary Tighten or correct wiring connection
Furnace fails to operate	EEF	Aux switch (condensate switch) open	Check evaporator drain pan, trap, piping

WARNING

HIGH VOLTAGE!
Disconnect ALL power before servicing or installing this unit. Multiple power sources may be present. Failure to do so may cause property damage, personal injury or death.

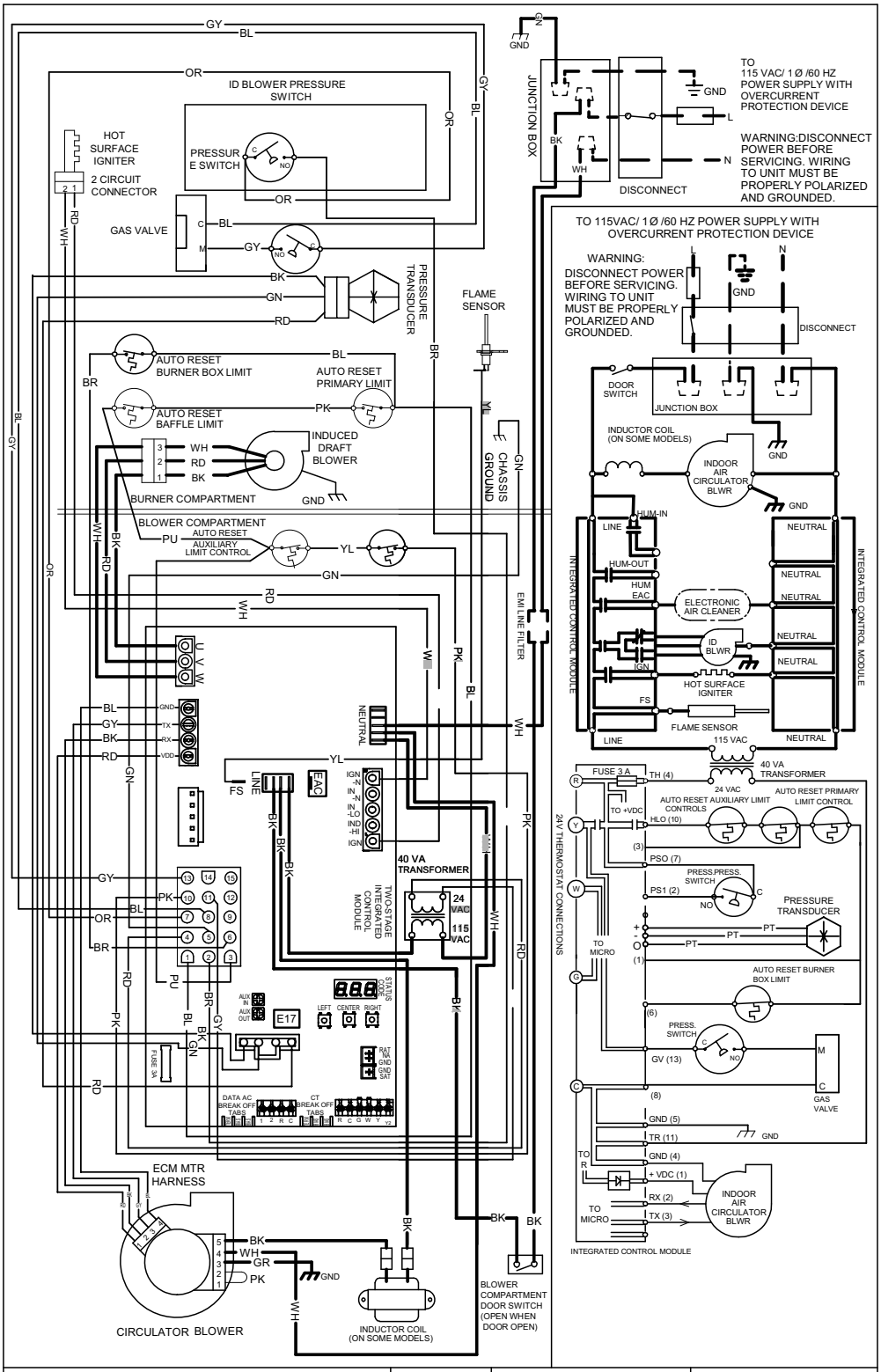

NOTES:

1. SET HEAT ANTICIPATOR ON ROOM THERMOSTAT AT 0.7 AMPS.
2. MANUFACTURER'S SPECIFIED REPLACEMENT PARTS MUST BE USED WHEN SERVICING.
3. IF ANY OF THE ORIGINAL WIRE AS SUPPLIED WITH THE FURNACE MUST BE REPLACED, IT MUST BE REPLACED WITH WIRING MATERIAL HAVING A TEMPERATURE RATING OF AT LEAST 105°C. USE COPPER CONDUCTORS ONLY.
4. UNIT MUST BE PERMANENTLY GROUNDED AND CONFORM TO N.E.C. AND LOCAL CODES.
5. TO RECALL THE LAST 6 FAULTS, MOST RECENT TO LEAST RECENT, DEPRESS SWITCH FOR MORE THAN 2 SECONDS WHILE IN STANDBY (NO THERMOSTAT INPUTS)
6. HUMIDIFIER INSTALLATION OPTIONS: USE HUM TERMINAL TO RUN HUMIDIFIER DURING HEAT CALL (COMMUNICATING OR LEGACY MODES). USE HUM-IN AND HUM-OUT TERMINALS TO RUN HUMIDIFIER DURING HEAT CALL (COMMUNICATING MODE OR LEGACY MODE) OR INDEPENDENTLY FROM HEAT CALL (COMMUNICATING MODE ONLY - SETUP IS DONE WITHIN COMMUNICATING THERMOSTAT)

COLOR CODES:
PK PINK
BR BROWN
WH WHITE
BL BLUE
GY GRAY
RD RED
YL YELLOW
OR ORANGE
PU PURPLE
GN GREEN
BK BLACK

LOW VOLTAGE (24V)
LOW VOLTAGE FIELD
HI VOLTAGE (115V)
HI VOLTAGE FIELD
JUNCTION
TERMINAL
INTERNAL TO INTEGRATED CONTROL
PLUG CONNECTION

EQUIPMENT GND
FIELD GND
FIELD SPLICE
SWITCH (TEMP.)
IGNITER
SWITCH (PRESS.)
OVERCURRENT PROT. DEVICE

Wiring is subject to change. Always refer to the wiring diagram on the unit for the most up-to-date wiring.

THIS PAGE IS INTENTIONALLY LEFT BLANK

CUSTOMER FEEDBACK
Daikin is very interested in all product comments.
Please fill out the feedback form on the following link:
https://daikincomfort.com/contact-us
You can also scan the QR code on the right to be directed to the feedback page.

PRODUCT REGISTRATION
Thank you for your recent purchase. Though not required to get the protection of the standard warranty, registering your product is a relatively short process, and entitles you to additional warranty protection, except that failure by California and Quebec residents to register their product does not diminish their warranty rights.

For Product Registration, please register by following this link:
https://daikincomfort.com/owner-support/product-registration
You can also scan the QR code on the right to be directed to the Product Registration page.

Our continuing commitment to quality products may mean a change in specifications without notice.
©2020 **DAIKIN MANUFACTURING COMPANY, L.P.**
19001 Kermier Rd. Waller, Tx 77484
www.daikincomfort.com